US009326381B2

(12) **United States Patent**
Lee et al.

(10) **Patent No.: US 9,326,381 B2**
(45) **Date of Patent: Apr. 26, 2016**

(54) **MULTILAYER CERAMIC CAPACITOR AND BOARD HAVING THE SAME MOUNTED THEREON**

(71) Applicant: **SAMSUNG ELECTRO-MECHANICS CO., LTD.**, Suwon-Si, Gyeonggi-Do (KR)

(72) Inventors: **Byoung Hwa Lee**, Suwon-Si (KR); **Heung Kil Park**, Suwon-Si (KR); **Kyo Kwang Lee**, Suwon-Si (KR); **Young Ghyu Ahn**, Suwon-Si (KR); **Sang Soo Park**, Suwon-Si (KR); **Soon Ju Lee**, Suwon-Si (KR)

(73) Assignee: **SAMSUNG ELECTRO-MECHANICS CO., LTD.**, Suwon-Si, Gyeonggi-Do (KR)

(*) Notice: Subject to any disclaimer, the term of this patent is extended or adjusted under 35 U.S.C. 154(b) by 197 days.

(21) Appl. No.: **14/259,011**

(22) Filed: **Apr. 22, 2014**

(65) **Prior Publication Data**

US 2014/0367152 A1 Dec. 18, 2014

(30) **Foreign Application Priority Data**

Jun. 14, 2013 (KR) 10-2013-0068498

(51) **Int. Cl.**
H01G 4/30 (2006.01)
H05K 1/11 (2006.01)
(Continued)

(52) **U.S. Cl.**
CPC ***H05K 1/111*** (2013.01); ***H01G 4/1209*** (2013.01); ***H01G 4/232*** (2013.01); ***H01G 4/30*** (2013.01);
(Continued)

(58) **Field of Classification Search**
CPC H01G 4/30; H01G 4/06; H01G 4/12; H01G 4/005; H01G 4/008
USPC 361/301.4, 303–305, 306.1, 306.3, 361/321.1, 321.2
See application file for complete search history.

(56) **References Cited**

U.S. PATENT DOCUMENTS

5,134,540 A † 7/1992 Rutt
5,952,040 A † 9/1999 Yadav
(Continued)

FOREIGN PATENT DOCUMENTS

JP 2008-192757 A 8/2008
KR 10-2008-0063680 A 7/2008
KR 10-2008-0110180 A 12/2008

OTHER PUBLICATIONS

Yukio Sakabe et al.; High Frequency Performance of Multilayer Ceramic Capacitors, Document No. 0569-5503/95/0000, pp. 234-240, 1995 IEEE.†
(Continued)

Primary Examiner — Nguyen T Ha
(74) *Attorney, Agent, or Firm* — McDermott Will & Emery LLP

(57) **ABSTRACT**

A multilayer ceramic capacitor may include: a ceramic body including dielectric layers and having first and second main surfaces opposing each other, first and second side surfaces opposing each other, and first and second end surfaces opposing each other; an active layer configured to form capacitance by including first and second internal electrodes facing each other with one dielectric layer therebetween and alternately exposed to the first or second side surface; upper and lower cover layers disposed on and below the active layer; and a first external electrode disposed on the first side surface and a second external electrode disposed on the second side surface. Thickness T and width W of the ceramic body satisfy $0.75W \leq T \leq 1.25W$, gap G between the first and second external electrodes satisfies $30\ \mu m \leq G \leq 0.9W$, and an average number of dielectric grains in a single dielectric layer in a thickness direction thereof is 2 or greater.

19 Claims, 5 Drawing Sheets

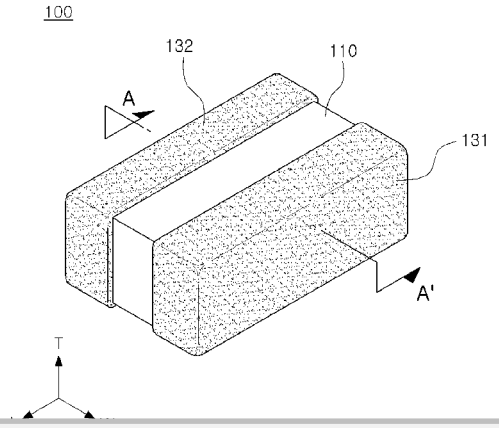

Exhibit 1001

(51) **Int. Cl.**
H01G 4/232 (2006.01)
H05K 3/34 (2006.01)
H01G 4/12 (2006.01)

(52) **U.S. Cl.**
CPC *H01G 4/12* (2013.01); *H05K 3/3442* (2013.01); *H05K 2201/0979* (2013.01); *H05K 2201/09709* (2013.01); *H05K 2201/10015* (2013.01); *H05K 2201/2045* (2013.01); *Y02P 70/611* (2015.11)

(56) **References Cited**

U.S. PATENT DOCUMENTS

6,377,439 B1 * 4/2002 Sekidou H01G 4/005 361/303
7,414,857 B2 † 8/2008 Ritter
8,238,116 B2 † 8/2012 Eggerding
8,263,515 B2 * 9/2012 Dogan B82Y 30/00 501/127
8,383,535 B2 * 2/2013 Yamaguchi C04B 35/46 361/321.4
8,437,115 B2 * 5/2013 Kim H01G 4/30 361/305
8,737,037 B2 * 5/2014 Kim H01G 4/0085 361/305
9,009,240 B2 * 4/2015 Milic-Frayling G06Q 10/10 370/432
9,129,750 B2 * 9/2015 Kim H01G 4/1209
2008/0310074 A1 12/2008 Togashi et al.
2008/0310078 A1 12/2008 Lee et al.

OTHER PUBLICATIONS

Joseph M. Hock et al.; TecForum TF-MP2, Inductance of Bypass Capacitors How to Define, How to Measure, How to Simulate, DesignCon East 2005.†

* cited by examiner
† cited by third party

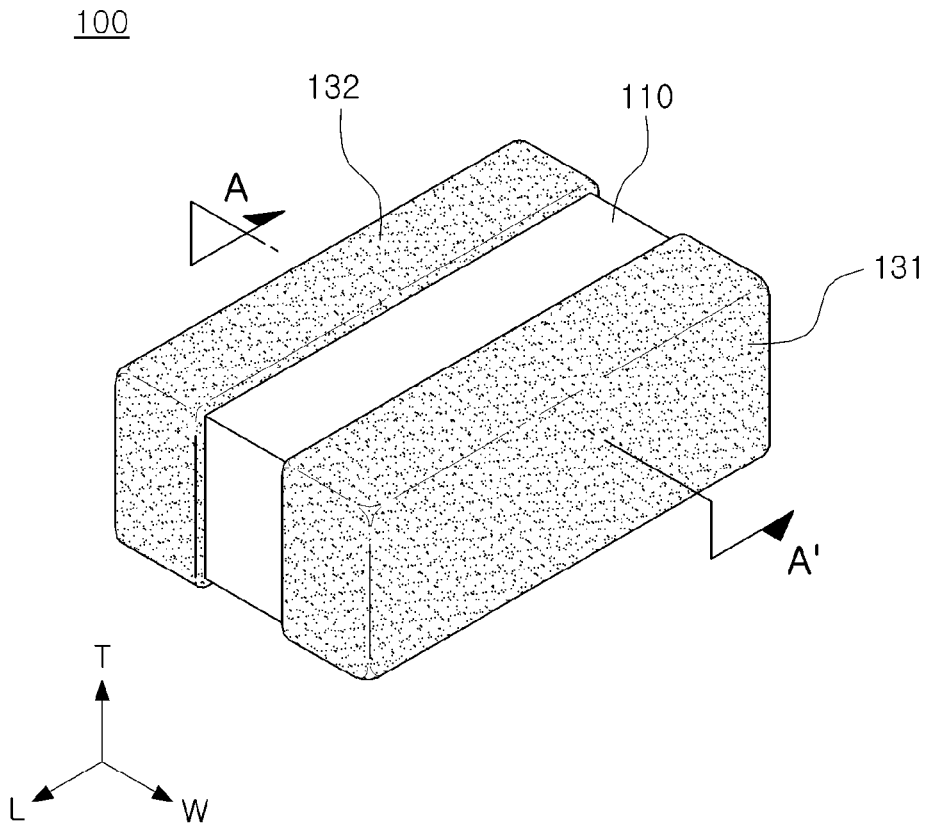

FIG. 1

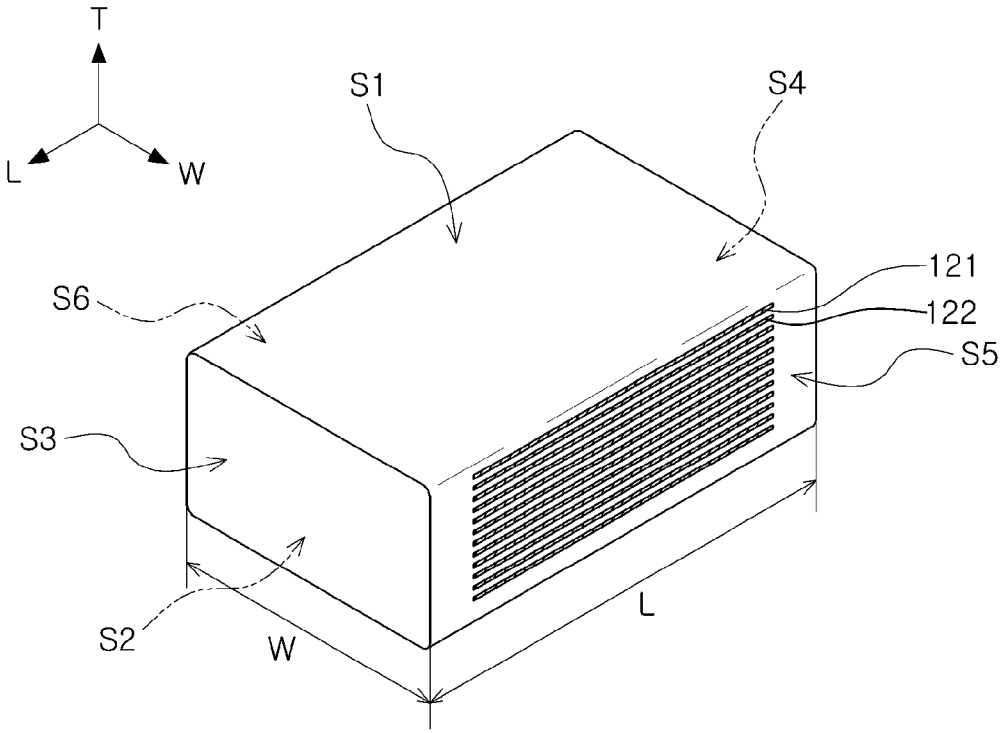

FIG. 2

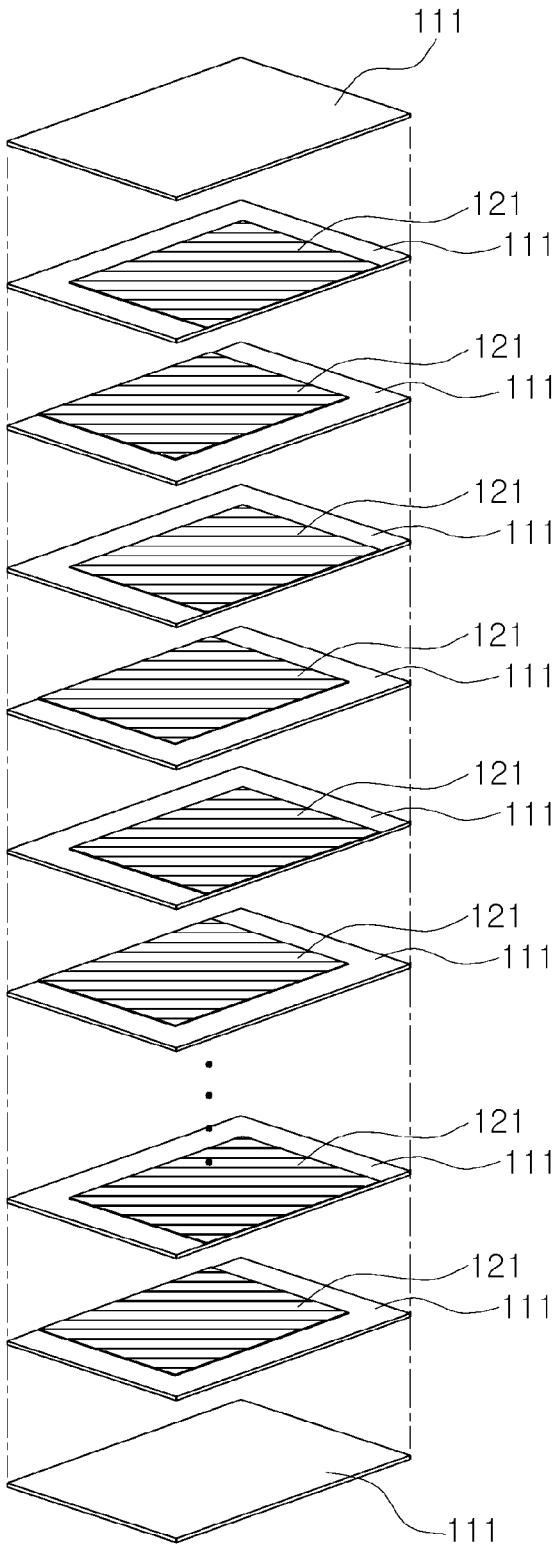

FIG. 3

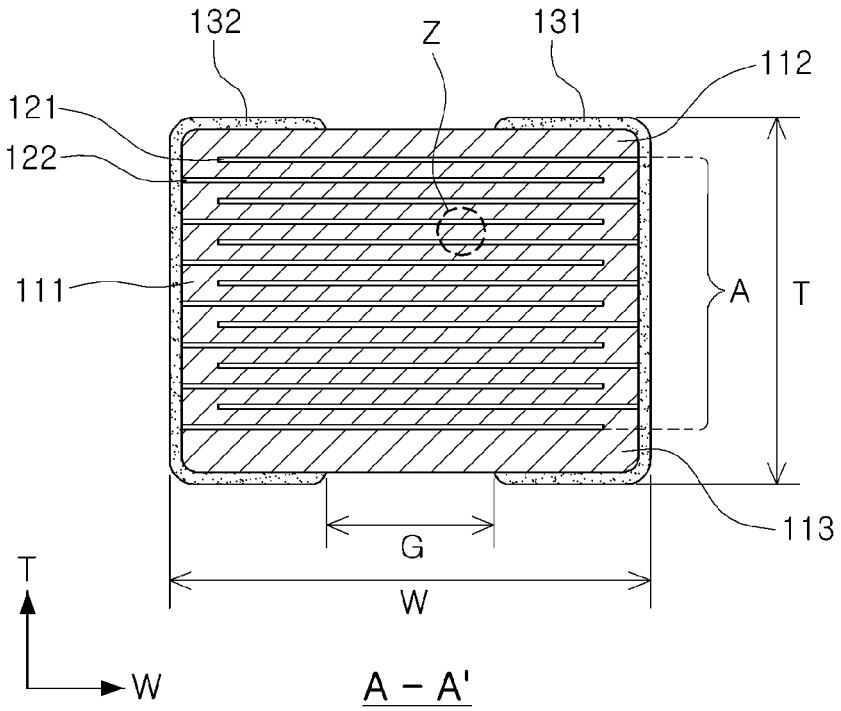

FIG. 4

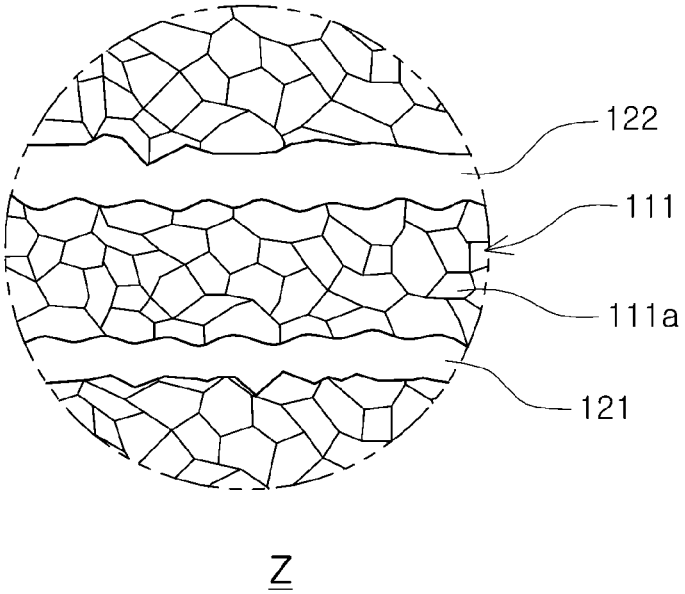

FIG. 5

DOCKET ALARM

Explore Litigation Insights

Docket Alarm provides insights to develop a more informed litigation strategy and the peace of mind of knowing you're on top of things.

Real-Time Litigation Alerts

Keep your litigation team up-to-date with **real-time alerts** and advanced team management tools built for the enterprise, all while greatly reducing PACER spend.

Our comprehensive service means we can handle Federal, State, and Administrative courts across the country.

Advanced Docket Research

With over 230 million records, Docket Alarm's cloud-native docket research platform finds what other services can't. Coverage includes Federal, State, plus PTAB, TTAB, ITC and NLRB decisions, all in one place.

Identify arguments that have been successful in the past with full text, pinpoint searching. Link to case law cited within any court document via Fastcase.

Analytics At Your Fingertips

Learn what happened the last time a particular judge, opposing counsel or company faced cases similar to yours.

Advanced out-of-the-box PTAB and TTAB analytics are always at your fingertips.

API

Docket Alarm offers a powerful API (application programming interface) to developers that want to integrate case filings into their apps.

LAW FIRMS

Build custom dashboards for your attorneys and clients with live data direct from the court.

Automate many repetitive legal tasks like conflict checks, document management, and marketing.

FINANCIAL INSTITUTIONS

Litigation and bankruptcy checks for companies and debtors.

E-DISCOVERY AND LEGAL VENDORS

Sync your system to PACER to automate legal marketing.