AO 120 (Rev. 08/10)

TO:	REPORT ON THE FILING OR DETERMINATION OF AN ACTION REGARDING A PATENT OR TRADEMARK
Mail Stop 8 Director of the U.S. Patent and Trademark Office P.O. Box 1450 Alexandria, VA 22313-1450	

In Compliance with 35 U.S.C. § 290 and/or 15 U.S.C. § 1116 you are hereby advised that a court action has been filed in the U.S. District Court Western District of Texas on the following

☐ Trademarks or ☑ Patents. (☐ the patent action involves 35 U.S.C. § 292.):

DOCKET NO.	DATE FILED	U.S. DISTRICT COURT
1:22-cv-01324	12/16/2022	Western District of Texas

PLAINTIFF	DEFENDANT
Entangled Media, LLC	Dropbox, Inc.

	PATENT OR TRADEMARK NO.	DATE OF PATENT OR TRADEMARK	HOLDER OF PATENT OR TRADEMARK
1	8,296,338	10/23/2012	Entangled Media, LLC
2	8,484,260	7/9/2013	Entangled Media, LLC
3			
4			
5			

In the above—entitled case, the following patent(s)/ trademark(s) have been included:

DATE INCLUDED

INCLUDED BY ☐ Amendment ☐ Answer ☐ Cross Bill ☐ Other Pleading

	PATENT OR TRADEMARK NO.	DATE OF PATENT OR TRADEMARK	HOLDER OF PATENT OR TRADEMARK
1			
2			
3			
4			
5			

In the above—entitled case, the following decision has been rendered or judgement issued:

DECISION/JUDGEMENT

Order Transferring Case

CLERK	(BY) DEPUTY CLERK	DATE
PHILIP J. DEVLIN	Deanna Massie	6/30/2023

Copy 1—Upon initiation of action, mail this copy to Director Copy 3—Upon termination of action, mail this copy to Director
Copy 2—Upon filing document adding patent(s), mail this copy to Director Copy 4—Case file copy

AO 120 (Rev. 08/10)

TO:	Mail Stop 8 Director of the U.S. Patent and Trademark Office P.O. Box 1450 Alexandria, VA 22313-1450	REPORT ON THE FILING OR DETERMINATION OF AN ACTION REGARDING A PATENT OR TRADEMARK

In Compliance with 35 U.S.C. § 290 and/or 15 U.S.C. § 1116 you are hereby advised that a court action has been filed in the U.S. District Court Western District of Texas on the following

☐ Trademarks or ☑ Patents. (☐ the patent action involves 35 U.S.C. § 292.):

DOCKET NO.	DATE FILED	U.S. DISTRICT COURT
1:22-cv-01324	12/16/2022	Western District of Texas

PLAINTIFF	DEFENDANT
Entangled Media, LLC	Dropbox, Inc.

	PATENT OR TRADEMARK NO.	DATE OF PATENT OR TRADEMARK	HOLDER OF PATENT OR TRADEMARK
1	8,296,338	10/23/2012	Entangled Media, LLC
2	8,484,260	7/9/2013	Entangled Media, LLC
3			
4			
5			

In the above—entitled case, the following patent(s)/ trademark(s) have been included:

DATE INCLUDED	INCLUDED BY ☐ Amendment ☐ Answer ☐ Cross Bill ☐ Other Pleading	
PATENT OR TRADEMARK NO.	DATE OF PATENT OR TRADEMARK	HOLDER OF PATENT OR TRADEMARK
1		
2		
3		
4		
5		

In the above—entitled case, the following decision has been rendered or judgement issued:

DECISION/JUDGEMENT

CLERK	(BY) DEPUTY CLERK	DATE
PHILIP J. DEVLIN		12/19/2022

Copy 1—Upon initiation of action, mail this copy to Director **Copy 3—Upon termination of action, mail this copy to Director**
Copy 2—Upon filing document adding patent(s), mail this copy to Director **Copy 4—Case file copy**

UNITED STATES PATENT AND TRADEMARK OFFICE

UNITED STATES DEPARTMENT OF COMMERCE
United States Patent and Trademark Office
Address: COMMISSIONER FOR PATENTS
P.O. Box 1450
Alexandria, Virginia 22313-1450
www.uspto.gov

APPLICATION NO.	ISSUE DATE	PATENT NO.	ATTORNEY DOCKET NO.	CONFIRMATION NO.
13/424,366	07/09/2013	8484260	3689.001US2	5386

21186 7590 06/19/2013

SCHWEGMAN, LUNDBERG & WOESSNER, P.A.
P.O. BOX 2938
MINNEAPOLIS, MN 55402

ISSUE NOTIFICATION

The projected patent number and issue date are specified above.

Determination of Patent Term Adjustment under 35 U.S.C. 154 (b)
(application filed on or after May 29, 2000)

The Patent Term Adjustment is 0 day(s). Any patent to issue from the above-identified application will include an indication of the adjustment on the front page.

If a Continued Prosecution Application (CPA) was filed in the above-identified application, the filing date that determines Patent Term Adjustment is the filing date of the most recent CPA.

Applicant will be able to obtain more detailed information by accessing the Patent Application Information Retrieval (PAIR) WEB site (http://pair.uspto.gov).

Any questions regarding the Patent Term Extension or Adjustment determination should be directed to the Office of Patent Legal Administration at (571)-272-7702. Questions relating to issue and publication fee payments should be directed to the Application Assistance Unit (AAU) of the Office of Data Management (ODM) at (571)-272-4200.

APPLICANT(s) (Please see PAIR WEB site http://pair.uspto.gov for additional applicants):

Erik Caso, Santa Monica, CA;
Michael Abraham, Boulder, CO;

The United States represents the largest, most dynamic marketplace in the world and is an unparalleled location for business investment, innovation, and commercialization of new technologies. The USA offers tremendous resources and advantages for those who invest and manufacture goods here. Through SelectUSA, our nation works to encourage and facilitate business investment. To learn more about why the USA is the best country in the world to develop technology, manufacture products, and grow your business, visit SelectUSA.gov.

Dropbox Exhibit 1002 - Page 3
Dropbox, Inc. v. Entangled Media, LLC
IPR2024-00285 - U.S. Patent No. 8,484,260

PART B - FEE(S) TRANSMITTAL

Complete and send this form, together with applicable fee(s), to: Mail **Mail Stop ISSUE FEE**
Commissioner for Patents
P.O. Box 1450
Alexandria, Virginia 22313-1450
or Fax (571)-273-2885

INSTRUCTIONS: This form should be used for transmitting the ISSUE FEE and PUBLICATION FEE (if required). Blocks 1 through 5 should be completed where appropriate. All further correspondence including the Patent, advance orders and notification of maintenance fees will be mailed to the current correspondence address as indicated unless corrected below or directed otherwise in Block 1, by (a) specifying a new correspondence address; and/or (b) indicating a separate "FEE ADDRESS" for maintenance fee notifications.

CURRENT CORRESPONDENCE ADDRESS (Note: Use Block 1 for any change of address)

21186 7590 03/26/2013
SCHWEGMAN, LUNDBERG & WOESSNER, P.A.
P.O. BOX 2938
MINNEAPOLIS, MN 55402

Note: A certificate of mailing can only be used for domestic mailings of the Fee(s) Transmittal. This certificate cannot be used for any other accompanying papers. Each additional paper, such as an assignment or Formal drawing, must have its own certificate of mailing or transmission.

Certificate of Mailing or Transmission
I hereby certify that this Fee(s) Transmittal is being deposited with the United States Postal Service with sufficient postage for first class mail in an envelope addressed to the Mail Stop ISSUE FEE address above, or being facsimile transmitted to the USPTO (571) 273-2885, on the date indicated below.

Sasha Reese (Depositor's name)
/Sasha Reese/ (Signature)
June 7, 2013 (Date)

APPLICATION NO.	FILING DATE	FIRST NAMED INVENTOR	ATTORNEY DOCKET NO.	CONFIRMATION NO.
13/424,366	03/19/2012	Erik Caso	3689.001US2	5386

TITLE OF INVENTION: Method For a Cloud-Based Meta-File System to Virtually Unify Remote and Local Files Across a Range of Devices' Local File Systems

APPLN. TYPE	ENTITY STATUS	ISSUE FEE DUE	PUBLICATION FEE DUE	PREV. PAID ISSUE FEE	TOTAL FEE(S) DUE	DATE DUE
nonprovisional	SMALL	$800	$300	$0	$1100	06/26/2013

EXAMINER	ART UNIT	CLASS-SUBCLASS
HO, BINH VAN	2163	707-827000

1. Change of correspondence address or indication of "Fee Address" (37 CFR 1.363).
- ☐ Change of correspondence address (or Change of Correspondence Address form PTO/SB/122) attached.
- ☒ "Fee Address" indication (or "Fee Address" Indication form PTO/SB/47; Rev 03-02 or more recent) attached. **Use of a Customer Number is required.**

2. For printing on the patent front page, list
(1) the names of up to 3 registered patent attorneys or agents OR, alternatively,
(2) the name of a single firm (having as a member a registered attorney or agent) and the names of up to 2 registered patent attorneys or agents. If no name is listed, no name will be printed.

1 Schwegman Lundberg
2 & Woessner, P.A.
3

3. ASSIGNEE NAME AND RESIDENCE DATA TO BE PRINTED ON THE PATENT (print or type)

PLEASE NOTE: Unless an assignee is identified below, no assignee data will appear on the patent. If an assignee is identified below, the document has been filed for recordation as set forth in 37 CFR 3.11. Completion of this form is NOT a substitute for filing an assignment.

(A) NAME OF ASSIGNEE: Entangled Media Corp.

(B) RESIDENCE: (CITY and STATE OR COUNTRY): Santa Monica, California

Please check the appropriate assignee category or categories (will not be printed on the patent): ☐ Individual ☒ Corporation or other private group entity ☐ Government

4a. The following fee(s) are submitted.
- ☒ Issue Fee
- ☒ Publication Fee (No small entity discount permitted)
- ☐ Advance Order - # of Copies .....

4b. Payment of Fee(s): **(Please first reapply any previously paid issue fee shown above)**
- ☐ A check is enclosed.
- ☐ Payment by credit card. Form PTO-2038 is attached.
- ☒ The Director is hereby authorized to charge the required fee(s), any deficiency, or credit any overpayment, to Deposit Account Number 19-0743 (enclose an extra copy of this form).

Dropbox Exhibit 1002 - Page 4
Dropbox, Inc. v. Entangled Media, LLC
IPR2024-00285 - U.S. Patent No. 8,484,260

5. **Change in Entity Status** (from status indicated above)

☐ Applicant certifying micro entity status. See 37 CFR 1.29

NOTE: Absent a valid certification of Micro Entity Status (see form PTO/SB/15A and 15B), issue fee payment in the micro entity amount will not be accepted at the risk of application abandonment.

☐ Applicant asserting small entity status. See 37 CFR 1.27

NOTE: If the application was previously under micro entity status, checking this box will be taken to be a notification of loss of entitlement to micro entity status.

☐ Applicant changing to regular undiscounted fee status.

NOTE: Checking this box will be taken to be a notification of loss of entitlement to small or micro entity status, as applicable.

NOTE: The Issue Fee and Publication Fee (if required) will not be accepted from anyone other than the applicant; a registered attorney or agent; or the assignee or other party in interest as shown by the records of the United States Patent and Trademark Office.

Authorized Signature 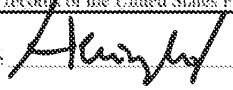 Date June 7, 2013

Typed or printed name Thierry Lo Registration No. 49,097

This collection of information is required by 37 CFR 1.311. The information is required to obtain or retain a benefit by the public which is to file (and by the USPTO to process) an application. Confidentiality is governed by 35 U.S.C. 122 and 37 CFR 1.14. This collection is estimated to take 12 minutes to complete, including gathering, preparing, and submitting the completed application form to the USPTO. Time will vary depending upon the individual case. Any comments on the amount of time you require to complete this form and/or suggestions for reducing this burden, should be sent to the Chief Information Officer, U.S. Patent and Trademark Office, U.S. Department of Commerce, P.O. Box 1450, Alexandria, Virginia 22313-1450. DO NOT SEND FEES OR COMPLETED FORMS TO THIS ADDRESS. SEND TO: Commissioner for Patents, P.O. Box 1450, Alexandria, Virginia 22313-1450.

Under the Paperwork Reduction Act of 1995, no persons are required to respond to a collection of information unless it displays a valid OMB control number.

Dropbox Exhibit 1002 - Page 5
Dropbox, Inc. v. Entangled Media, LLC
IPR2024-00285 - U.S. Patent No. 8,484,260

IN THE UNITED STATES PATENT AND TRADEMARK OFFICE

Applicant:	Erik Caso et al.	Examiner: Binh Ho	
Serial No.:	13/424,366	Group Art Unit: 2163	
Filed:	March 19, 2012	Docket No.: 3689.001US2	
Customer No.:	21186	Confirmation No.: 5386	
Title:	Method For a Cloud-Based Meta-File System to Virtually Unify Remote and Local Files Across a Range of Devices' Local File Systems		

COMMUNICATION RE: FEE ADDRESS

Mail Stop Issue Fee
Commissioner for Patents
P.O.Box 1450
Alexandria, VA 22313-1450

In response to the Notice of Allowance and Issue Fee Due, please record the Fee Address under the provisions of 37 CFR 1.363 as the following:

Customer Number 21186

Please direct any inquiries to the undersigned attorney at (949) 354-0200.

Respectfully submitted,

SCHWEGMAN, LUNDBERG & WOESSNER, P.A.
P.O. Box 2938
Minneapolis, MN 55402
(949) 354-0200

Date June 7, 2013 By _____
Thierry Lo
Reg. No. 49,097

CERTIFICATE UNDER 37 CFR 1.8: The undersigned hereby certifies that this correspondence is filed using the USPTO's electronic filing system EFS-Web, and is addressed to: Mail Stop Issue Fee, Commissioner for Patents, P.O. Box 1450, Alexandria, VA 22313-1450 on this 7th day of June, 2013.

Sasha Reese
Name

/Sasha Reese/
Signature

Electronic Patent Application Fee Transmittal

Application Number:	13424366
Filing Date:	19-Mar-2012
Title of Invention:	Method For a Cloud-Based Meta-File System to Virtually Unify Remote and Local Files Across a Range of Devices' Local File Systems
First Named Inventor/Applicant Name:	Erik Caso
Filer:	Robert Madden/Sasha Reese
Attorney Docket Number:	3689.001US2

Filed as Small Entity

Utility under 35 USC 111(a) Filing Fees

Description	Fee Code	Quantity	Amount	Sub-Total in USD($)
Basic Filing:				
Pages:				
Claims:				
Miscellaneous-Filing:				
Petition:				
Patent-Appeals-and-Interference:				
Post-Allowance-and-Post-Issuance:				
Utility Appl Issue Fee	2501	1	890	890
Publ. Fee- Early, Voluntary, or Normal	1504	1	300	300

Description	Fee Code	Quantity	Amount	Sub-Total in USD($)
Extension-of-Time:				
Miscellaneous:				
		Total in USD ($)		**1190**

Electronic Acknowledgement Receipt	
EFS ID:	15980985
Application Number:	13424366
International Application Number:	
Confirmation Number:	5386
Title of Invention:	Method For a Cloud-Based Meta-File System to Virtually Unify Remote and Local Files Across a Range of Devices' Local File Systems
First Named Inventor/Applicant Name:	Erik Caso
Customer Number:	21186
Filer:	Robert Madden/Sasha Reese
Filer Authorized By:	Robert Madden
Attorney Docket Number:	3689.001US2
Receipt Date:	07-JUN-2013
Filing Date:	19-MAR-2012
Time Stamp:	14:57:43
Application Type:	Utility under 35 USC 111(a)

Payment information:

Submitted with Payment	yes
Payment Type	Deposit Account
Payment was successfully received in RAM	$1190
RAM confirmation Number	1367
Deposit Account	190743
Authorized User	
The Director of the USPTO is hereby authorized to charge indicated fees and credit any overpayment as follows: Charge any Additional Fees required under 37 C.F.R. Section 1.16 (National application filing, search, and examination fees) Charge any Additional Fees required under 37 C.F.R. Section 1.17 (Patent application and reexamination processing fees)	

Charge any Additional Fees required under 37 C.F.R. Section 1.19 (Document supply fees)

Charge any Additional Fees required under 37 C.F.R. Section 1.20 (Post Issuance fees)

Charge any Additional Fees required under 37 C.F.R. Section 1.21 (Miscellaneous fees and charges)

File Listing:

Document Number	Document Description	File Name	File Size(Bytes)/ Message Digest	Multi Part /.zip	Pages (if appl.)
1		3689001US2_IssueFee.pdf	579857 bde84d997a7e0a96f7e3708469774a5958dd9b77	yes	4

Multipart Description/PDF files in .zip description

Document Description	Start	End
Transmittal Letter	1	1
Issue Fee Payment (PTO-85B)	2	3
Miscellaneous Incoming Letter	4	4

Warnings:

Information:

2	Fee Worksheet (SB06)	fee-info.pdf	31945 c20c5c9cd6fd573ef2f794398f3b0c32e867595f	no	2

Warnings:

Information:

Total Files Size (in bytes):	611802

This Acknowledgement Receipt evidences receipt on the noted date by the USPTO of the indicated documents, characterized by the applicant, and including page counts, where applicable. It serves as evidence of receipt similar to a Post Card, as described in MPEP 503.

New Applications Under 35 U.S.C. 111

If a new application is being filed and the application includes the necessary components for a filing date (see 37 CFR 1.53(b)-(d) and MPEP 506), a Filing Receipt (37 CFR 1.54) will be issued in due course and the date shown on this Acknowledgement Receipt will establish the filing date of the application.

National Stage of an International Application under 35 U.S.C. 371

If a timely submission to enter the national stage of an international application is compliant with the conditions of 35 U.S.C. 371 and other applicable requirements a Form PCT/DO/EO/903 indicating acceptance of the application as a national stage submission under 35 U.S.C. 371 will be issued in addition to the Filing Receipt, in due course.

New International Application Filed with the USPTO as a Receiving Office

If a new international application is being filed and the international application includes the necessary components for an international filing date (see PCT Article 11 and MPEP 1810), a Notification of the International Application Number and of the International Filing Date (Form PCT/RO/105) will be issued in due course, subject to prescriptions concerning national security, and the date shown on this Acknowledgement Receipt will establish the international filing date of the application.

IN THE UNITED STATES PATENT AND TRADEMARK OFFICE

Applicant: Erik Caso et al.

Title: Method For a Cloud-Based Meta-File System to Virtually Unify Remote and Local Files Across a Range of Devices' Local File Systems

Docket No.:	3689.001US2	Serial No.:	13/424,366
Filed:	March 19, 2012	Due Date:	June 26, 2013
Examiner:	Binh Ho	Group Art Unit:	2163
Customer No.:	21186	Confirmation No.:	5386

Notice of Allowance Date: March 26, 2013

Mail Stop Issue Fee
Commissioner for Patents
P.O. Box 1450
Alexandria, VA 22313-1450

We are transmitting herewith the following:

X Authorization to charge Deposit 19-0743 in the amount of $890.00 to cover the Small Entity Issue Fee Payment.
X Authorization to charge Deposit 19-0743 in the amount of $300.00 to cover the Publication Fee Payment.
X Issue Fee Transmittal (Form PTOL-85).
X Communication Re: Fee Address (1 page).

Please charge any additional required fees or credit overpayment to Deposit Account No. 19-0743.

SCHWEGMAN, LUNDBERG & WOESSNER, P.A. By _____
Customer No.: 21186 Thierry Lo
Reg. No. 49,097

CERTIFICATE UNDER 37 CFR 1.8: The undersigned hereby certifies that this correspondence is being filed using the USPTO's electronic filing system EFS-Web, and is addressed to: Mail Stop Issue Fee, Commissioner for Patents, P.O. Box 1450, Alexandria, VA 22313-1450 on this 7th day of June, 2013.

Sasha Reese
Name

/Sasha Reese/
Signature

Examiner-Initiated Interview Summary	Application No.	Applicant(s)	
	13/424,366	CASO ET AL.	
	Examiner	Art Unit	
	BINH V. HO	2163	

All participants (applicant, applicant's representative, PTO personnel):

(1) *BINH V. HO*. (3)_____.

(2) *Thierry Lo*. (4)_____.

Date of Interview: *05 March 2013*.

Type: ☒ Telephonic ☐ Video Conference
☐ Personal [copy given to: ☐ applicant ☐ applicant's representative]

Exhibit shown or demonstration conducted: ☐ Yes ☒ No.
If Yes, brief description: _____.

Issues Discussed ☐101 ☐112 ☐102 ☐103 ☒Others
(For each of the checked box(es) above, please describe below the issue and detailed description of the discussion)

Claim(s) discussed: *1, 8-9*.

Identification of prior art discussed: *Clack (U.S. 2006/0161585)*.

Substance of Interview
(For each issue discussed, provide a detailed description and indicate if agreement was reached. Some topics may include: identification or clarification of a reference or a portion thereof, claim interpretation, proposed amendments, arguments of any applied references etc...)

Examiner discussed allowable subject matter on claim 4 with Attorney Lo. Examiner suggested incorporating claim 4 into claims 1, 8-9, in order to place the application in a condition for allowance. Attorney Lo agreed with such amendment. Thus, Examiner Amendment has been authorized. .

Applicant recordation instructions: It is not necessary for applicant to provide a separate record of the substance of interview.

Examiner recordation instructions: Examiners must summarize the substance of any interview of record. A complete and proper recordation of the substance of an interview should include the items listed in MPEP 713.04 for complete and proper recordation including the identification of the general thrust of each argument or issue discussed, a general indication of any other pertinent matters discussed regarding patentability and the general results or outcome of the interview, to include an indication as to whether or not agreement was reached on the issues raised.

☐ Attachment

/Binh Van Ho/ Primary Examiner, Art Unit 2163	

Dropbox Exhibit 1002 - Page 12
Dropbox, Inc. v. Entangled Media, LLC
IPR2024-00285 - U.S. Patent No. 8,484,260

UNITED STATES PATENT AND TRADEMARK OFFICE

UNITED STATES DEPARTMENT OF COMMERCE
United States Patent and Trademark Office
Address: COMMISSIONER FOR PATENTS
P.O. Box 1450
Alexandria, Virginia 22313-1450
www.uspto.gov

NOTICE OF ALLOWANCE AND FEE(S) DUE

21186 7590 03/26/2013

SCHWEGMAN, LUNDBERG & WOESSNER, P.A.
P.O. BOX 2938
MINNEAPOLIS, MN 55402

EXAMINER
HO, BINH VAN

ART UNIT	PAPER NUMBER
2163	

DATE MAILED: 03/26/2013

APPLICATION NO.	FILING DATE	FIRST NAMED INVENTOR	ATTORNEY DOCKET NO.	CONFIRMATION NO.
13/424,366	03/19/2012	Erik Caso	3689.001US2	5386

TITLE OF INVENTION: Method For a Cloud-Based Meta-File System to Virtually Unify Remote and Local Files Across a Range of Devices' Local File Systems

APPLN. TYPE	ENTITY STATUS	ISSUE FEE DUE	PUBLICATION FEE DUE	PREV. PAID ISSUE FEE	TOTAL FEE(S) DUE	DATE DUE
nonprovisional	SMALL	$890	$300	$0	$1190	06/26/2013

THE APPLICATION IDENTIFIED ABOVE HAS BEEN EXAMINED AND IS ALLOWED FOR ISSUANCE AS A PATENT. PROSECUTION ON THE MERITS IS CLOSED. THIS NOTICE OF ALLOWANCE IS NOT A GRANT OF PATENT RIGHTS. THIS APPLICATION IS SUBJECT TO WITHDRAWAL FROM ISSUE AT THE INITIATIVE OF THE OFFICE OR UPON PETITION BY THE APPLICANT. SEE 37 CFR 1.313 AND MPEP 1308.

THE ISSUE FEE AND PUBLICATION FEE (IF REQUIRED) MUST BE PAID WITHIN THREE MONTHS FROM THE MAILING DATE OF THIS NOTICE OR THIS APPLICATION SHALL BE REGARDED AS ABANDONED. THIS STATUTORY PERIOD CANNOT BE EXTENDED. SEE 35 U.S.C. 151. THE ISSUE FEE DUE INDICATED ABOVE DOES NOT REFLECT A CREDIT FOR ANY PREVIOUSLY PAID ISSUE FEE IN THIS APPLICATION. IF AN ISSUE FEE HAS PREVIOUSLY BEEN PAID IN THIS APPLICATION (AS SHOWN ABOVE), THE RETURN OF PART B OF THIS FORM WILL BE CONSIDERED A REQUEST TO REAPPLY THE PREVIOUSLY PAID ISSUE FEE TOWARD THE ISSUE FEE NOW DUE.

HOW TO REPLY TO THIS NOTICE:

I. Review the ENTITY STATUS shown above. If the ENTITY STATUS is shown as SMALL or MICRO, verify whether entitlement to that entity status still applies.

If the ENTITY STATUS is the same as shown above, pay the TOTAL FEE(S) DUE shown above.

If the ENTITY STATUS is changed from that shown above, on PART B - FEE(S) TRANSMITTAL, complete section number 5 titled "Change in Entity Status (from status indicated above)".

For purposes of this notice, small entity fees are 1/2 the amount of undiscounted fees, and micro entity fees are 1/2 the amount of small entity fees.

II. PART B - FEE(S) TRANSMITTAL, or its equivalent, must be completed and returned to the United States Patent and Trademark Office (USPTO) with your ISSUE FEE and PUBLICATION FEE (if required). If you are charging the fee(s) to your deposit account, section "4b" of Part B - Fee(s) Transmittal should be completed and an extra copy of the form should be submitted. If an equivalent of Part B is filed, a request to reapply a previously paid issue fee must be clearly made, and delays in processing may occur due to the difficulty in recognizing the paper as an equivalent of Part B.

III. All communications regarding this application must give the application number. Please direct all communications prior to issuance to Mail Stop ISSUE FEE unless advised to the contrary.

IMPORTANT REMINDER: Utility patents issuing on applications filed on or after Dec. 12, 1980 may require payment of maintenance fees. It is patentee's responsibility to ensure timely payment of maintenance fees when due.

Dropbox Exhibit 1002 - Page 13
Dropbox, Inc. v. Entangled Media, LLC
IPR2024-00285 - U.S. Patent No. 8,484,260

PART B - FEE(S) TRANSMITTAL

Complete and send this form, together with applicable fee(s), to: Mail **Mail Stop ISSUE FEE**
Commissioner for Patents
P.O. Box 1450
Alexandria, Virginia 22313-1450
or Fax (571)-273-2885

INSTRUCTIONS: This form should be used for transmitting the ISSUE FEE and PUBLICATION FEE (if required). Blocks 1 through 5 should be completed where appropriate. All further correspondence including the Patent, advance orders and notification of maintenance fees will be mailed to the current correspondence address as indicated unless corrected below or directed otherwise in Block 1, by (a) specifying a new correspondence address; and/or (b) indicating a separate "FEE ADDRESS" for maintenance fee notifications.

CURRENT CORRESPONDENCE ADDRESS (Note: Use Block 1 for any change of address)

21186 7590 03/26/2013
SCHWEGMAN, LUNDBERG & WOESSNER, P.A.
P.O. BOX 2938
MINNEAPOLIS, MN 55402

Note: A certificate of mailing can only be used for domestic mailings of the Fee(s) Transmittal. This certificate cannot be used for any other accompanying papers. Each additional paper, such as an assignment or formal drawing, must have its own certificate of mailing or transmission.

Certificate of Mailing or Transmission
I hereby certify that this Fee(s) Transmittal is being deposited with the United States Postal Service with sufficient postage for first class mail in an envelope addressed to the Mail Stop ISSUE FEE address above, or being facsimile transmitted to the USPTO (571) 273-2885, on the date indicated below.

(Depositor's name)
(Signature)
(Date)

APPLICATION NO.	FILING DATE	FIRST NAMED INVENTOR	ATTORNEY DOCKET NO.	CONFIRMATION NO.
13/424,366	03/19/2012	Erik Caso	3689.001US2	5386

TITLE OF INVENTION: Method For a Cloud-Based Meta-File System to Virtually Unify Remote and Local Files Across a Range of Devices' Local File Systems

APPLN. TYPE	ENTITY STATUS	ISSUE FEE DUE	PUBLICATION FEE DUE	PREV. PAID ISSUE FEE	TOTAL FEE(S) DUE	DATE DUE
nonprovisional	SMALL	$890	$300	$0	$1190	06/26/2013

EXAMINER	ART UNIT	CLASS-SUBCLASS
HO, BINH VAN	2163	707-827000

1. Change of correspondence address or indication of "Fee Address" (37 CFR 1.363).
- ❑ Change of correspondence address (or Change of Correspondence Address form PTO/SB/122) attached.
- ❑ "Fee Address" indication (or "Fee Address" Indication form PTO/SB/47; Rev 03-02 or more recent) attached. **Use of a Customer Number is required.**

2. For printing on the patent front page, list
(1) the names of up to 3 registered patent attorneys or agents OR, alternatively,
(2) the name of a single firm (having as a member a registered attorney or agent) and the names of up to 2 registered patent attorneys or agents. If no name is listed, no name will be printed.
1 _____
2 _____
3 _____

3. ASSIGNEE NAME AND RESIDENCE DATA TO BE PRINTED ON THE PATENT (print or type)

PLEASE NOTE: Unless an assignee is identified below, no assignee data will appear on the patent. If an assignee is identified below, the document has been filed for recordation as set forth in 37 CFR 3.11. Completion of this form is NOT a substitute for filing an assignment.

(A) NAME OF ASSIGNEE (B) RESIDENCE: (CITY and STATE OR COUNTRY)

Please check the appropriate assignee category or categories (will not be printed on the patent) : ❑ Individual ❑ Corporation or other private group entity ❑ Government

4a. The following fee(s) are submitted:
- ❑ Issue Fee
- ❑ Publication Fee (No small entity discount permitted)
- ❑ Advance Order - # of Copies _____

4b. Payment of Fee(s): **(Please first reapply any previously paid issue fee shown above)**
- ❑ A check is enclosed.
- ❑ Payment by credit card. Form PTO-2038 is attached.
- ❑ The Director is hereby authorized to charge the required fee(s), any deficiency, or credit any overpayment, to Deposit Account Number _____ (enclose an extra copy of this form).

PTOL-85 (Rev. 02/11)

Dropbox Exhibit 1002 - Page 14
Dropbox, Inc. v. Entangled Media, LLC
IPR2024-00285 - U.S. Patent No. 8,484,260

5. **Change in Entity Status** (from status indicated above)

❑ Applicant certifying micro entity status. See 37 CFR 1.29

NOTE: Absent a valid certification of Micro Entity Status (see form PTO/SB/15A and 15B), issue fee payment in the micro entity amount will not be accepted at the risk of application abandonment.

❑ Applicant asserting small entity status. See 37 CFR 1.27

NOTE: If the application was previously under micro entity status, checking this box will be taken to be a notification of loss of entitlement to micro entity status.

❑ Applicant changing to regular undiscounted fee status.

NOTE: Checking this box will be taken to be a notification of loss of entitlement to small or micro entity status, as applicable.

NOTE: The Issue Fee and Publication Fee (if required) will not be accepted from anyone other than the applicant; a registered attorney or agent; or the assignee or other party in interest as shown by the records of the United States Patent and Trademark Office.

Authorized Signature _____ Date _____

Typed or printed name _____ Registration No. _____

This collection of information is required by 37 CFR 1.311. The information is required to obtain or retain a benefit by the public which is to file (and by the USPTO to process) an application. Confidentiality is governed by 35 U.S.C. 122 and 37 CFR 1.14. This collection is estimated to take 12 minutes to complete, including gathering, preparing, and submitting the completed application form to the USPTO. Time will vary depending upon the individual case. Any comments on the amount of time you require to complete this form and/or suggestions for reducing this burden, should be sent to the Chief Information Officer, U.S. Patent and Trademark Office, U.S. Department of Commerce, P.O. Box 1450, Alexandria, Virginia 22313-1450. DO NOT SEND FEES OR COMPLETED FORMS TO THIS ADDRESS. SEND TO: Commissioner for Patents, P.O. Box 1450, Alexandria, Virginia 22313-1450.

Under the Paperwork Reduction Act of 1995, no persons are required to respond to a collection of information unless it displays a valid OMB control number.

Dropbox Exhibit 1002 - Page 15
Dropbox, Inc. v. Entangled Media, LLC
IPR2024-00285 - U.S. Patent No. 8,484,260

UNITED STATES PATENT AND TRADEMARK OFFICE

UNITED STATES DEPARTMENT OF COMMERCE
United States Patent and Trademark Office
Address: COMMISSIONER FOR PATENTS
P.O. Box 1450
Alexandria, Virginia 22313-1450
www.uspto.gov

APPLICATION NO.	FILING DATE	FIRST NAMED INVENTOR	ATTORNEY DOCKET NO.	CONFIRMATION NO.
13/424,366	03/19/2012	Erik Caso	3689.001US2	5386

21186 7590 03/26/2013

SCHWEGMAN, LUNDBERG & WOESSNER, P.A.
P.O. BOX 2938
MINNEAPOLIS, MN 55402

EXAMINER	
HO, BINH VAN	
ART UNIT	PAPER NUMBER
2163	

DATE MAILED: 03/26/2013

Determination of Patent Term Adjustment under 35 U.S.C. 154 (b)
(application filed on or after May 29, 2000)

The Patent Term Adjustment to date is 0 day(s). If the issue fee is paid on the date that is three months after the mailing date of this notice and the patent issues on the Tuesday before the date that is 28 weeks (six and a half months) after the mailing date of this notice, the Patent Term Adjustment will be 0 day(s).

If a Continued Prosecution Application (CPA) was filed in the above-identified application, the filing date that determines Patent Term Adjustment is the filing date of the most recent CPA.

Applicant will be able to obtain more detailed information by accessing the Patent Application Information Retrieval (PAIR) WEB site (http://pair.uspto.gov).

Any questions regarding the Patent Term Extension or Adjustment determination should be directed to the Office of Patent Legal Administration at (571)-272-7702. Questions relating to issue and publication fee payments should be directed to the Customer Service Center of the Office of Patent Publication at 1-(888)-786-0101 or (571)-272-4200.

Dropbox Exhibit 1002 - Page 16
Dropbox, Inc. v. Entangled Media, LLC
IPR2024-00285 - U.S. Patent No. 8,484,260

Privacy Act Statement

The Privacy Act of 1974 (P.L. 93-579) requires that you be given certain information in connection with your submission of the attached form related to a patent application or patent. Accordingly, pursuant to the requirements of the Act, please be advised that: (1) the general authority for the collection of this information is 35 U.S.C. 2(b)(2); (2) furnishing of the information solicited is voluntary; and (3) the principal purpose for which the information is used by the U.S. Patent and Trademark Office is to process and/or examine your submission related to a patent application or patent. If you do not furnish the requested information, the U.S. Patent and Trademark Office may not be able to process and/or examine your submission, which may result in termination of proceedings or abandonment of the application or expiration of the patent.

The information provided by you in this form will be subject to the following routine uses:

1. The information on this form will be treated confidentially to the extent allowed under the Freedom of Information Act (5 U.S.C. 552) and the Privacy Act (5 U.S.C 552a). Records from this system of records may be disclosed to the Department of Justice to determine whether disclosure of these records is required by the Freedom of Information Act.
2. A record from this system of records may be disclosed, as a routine use, in the course of presenting evidence to a court, magistrate, or administrative tribunal, including disclosures to opposing counsel in the course of settlement negotiations.
3. A record in this system of records may be disclosed, as a routine use, to a Member of Congress submitting a request involving an individual, to whom the record pertains, when the individual has requested assistance from the Member with respect to the subject matter of the record.
4. A record in this system of records may be disclosed, as a routine use, to a contractor of the Agency having need for the information in order to perform a contract. Recipients of information shall be required to comply with the requirements of the Privacy Act of 1974, as amended, pursuant to 5 U.S.C. 552a(m).
5. A record related to an International Application filed under the Patent Cooperation Treaty in this system of records may be disclosed, as a routine use, to the International Bureau of the World Intellectual Property Organization, pursuant to the Patent Cooperation Treaty.
6. A record in this system of records may be disclosed, as a routine use, to another federal agency for purposes of National Security review (35 U.S.C. 181) and for review pursuant to the Atomic Energy Act (42 U.S.C. 218(c)).
7. A record from this system of records may be disclosed, as a routine use, to the Administrator, General Services, or his/her designee, during an inspection of records conducted by GSA as part of that agency's responsibility to recommend improvements in records management practices and programs, under authority of 44 U.S.C. 2904 and 2906. Such disclosure shall be made in accordance with the GSA regulations governing inspection of records for this purpose, and any other relevant (i.e., GSA or Commerce) directive. Such disclosure shall not be used to make determinations about individuals.
8. A record from this system of records may be disclosed, as a routine use, to the public after either publication of the application pursuant to 35 U.S.C. 122(b) or issuance of a patent pursuant to 35 U.S.C. 151. Further, a record may be disclosed, subject to the limitations of 37 CFR 1.14, as a routine use, to the public if the record was filed in an application which became abandoned or in which the proceedings were terminated and which application is referenced by either a published application, an application open to public inspection or an issued patent.
9. A record from this system of records may be disclosed, as a routine use, to a Federal, State, or local law enforcement agency, if the USPTO becomes aware of a violation or potential violation of law or regulation.

Notice of Allowability	Application No.	Applicant(s)	
	13/424,366	CASO ET AL.	
	Examiner	Art Unit	
	BINH V. HO	2163	

-- The MAILING DATE of this communication appears on the cover sheet with the correspondence address--

All claims being allowable, PROSECUTION ON THE MERITS IS (OR REMAINS) CLOSED in this application. If not included herewith (or previously mailed), a Notice of Allowance (PTOL-85) or other appropriate communication will be mailed in due course. **THIS NOTICE OF ALLOWABILITY IS NOT A GRANT OF PATENT RIGHTS.** This application is subject to withdrawal from issue at the initiative of the Office or upon petition by the applicant. See 37 CFR 1.313 and MPEP 1308.

1. ☒ This communication is responsive to *01/23/2013*.

2. ☐ An election was made by the applicant in response to a restriction requirement set forth during the interview on _____; the restriction requirement and election have been incorporated into this action.

3. ☒ The allowed claim(s) is/are *1-3,5-9*. As a result of the allowed claim(s), you may be eligible to benefit from the **Patent Prosecution Highway** program at a participating intellectual property office for the corresponding application. For more information, please see http://www.uspto.gov/patents/init_events/pph/index.jsp or send an inquiry to PPHfeedback@uspto.gov .

4. ☐ Acknowledgment is made of a claim for foreign priority under 35 U.S.C. § 119(a)-(d) or (f).
   a) ☐ All b) ☐ Some* c) ☐ None of the:
      1. ☐ Certified copies of the priority documents have been received.
      2. ☐ Certified copies of the priority documents have been received in Application No. _____ .
      3. ☐ Copies of the certified copies of the priority documents have been received in this national stage application from the International Bureau (PCT Rule 17.2(a)).

   * Certified copies not received: _____.

Applicant has THREE MONTHS FROM THE "MAILING DATE" of this communication to file a reply complying with the requirements noted below. Failure to timely comply will result in ABANDONMENT of this application.
THIS THREE-MONTH PERIOD IS NOT EXTENDABLE.

5. ☐ CORRECTED DRAWINGS (as "replacement sheets") must be submitted.
   ☐ including changes required by the attached Examiner's Amendment / Comment or in the Office action of Paper No./Mail Date _____.

   Identifying indicia such as the application number (see 37 CFR 1.84(c)) should be written on the drawings in the front (not the back) of each sheet. Replacement sheet(s) should be labeled as such in the header according to 37 CFR 1.121(d).

6. ☐ DEPOSIT OF and/or INFORMATION about the deposit of BIOLOGICAL MATERIAL must be submitted. Note the attached Examiner's comment regarding REQUIREMENT FOR THE DEPOSIT OF BIOLOGICAL MATERIAL.

Attachment(s)

1. ☒ Notice of References Cited (PTO-892)
2. ☒ Information Disclosure Statements (PTO/SB/08), Paper No./Mail Date 01/23/2013
3. ☐ Examiner's Comment Regarding Requirement for Deposit of Biological Material
4. ☒ Interview Summary (PTO-413), Paper No./Mail Date *03/05/2013* .
5. ☒ Examiner's Amendment/Comment
6. ☒ Examiner's Statement of Reasons for Allowance
7. ☐ Other _____.

/Binh Van Ho/
Primary Examiner, Art Unit 2163

Dropbox Exhibit 1002 - Page 18
Dropbox, Inc. v. Entangled Media, LLC
IPR2024-00285 - U.S. Patent No. 8,484,260

DETAILED ACTION

Examiner's Amendment

1. An examiner's amendment to the record appears below. Should the changes and /or additions be unacceptable to applicant, an amendment may be filed as provided by 37 CFR 1.3.12. To ensure consideration of such an amendment, it MUST be submitted no later than the payment of the issue fee.

2. The following claim has been amended upon agreement by applicant during a telephone conversation with Mr. Thierry Lo on 03/05/2013.

Amendments to claims 1, 5, and 8-9; and cancelled claim 4:

Claim 1 (Currently Amended):

A process for operating on files located on multiple devices using a singular file system comprising:

accepting a request to operate on a file at a first device, wherein the file is selected from the singular file system on the first device;

modifying the singular file system on the first device to make local files and virtual files appear indistinguishable to the singular file system, the local files and virtual files sharing a same location on the first device;

intercepting the request by a software client on the first device;

determining by the software client if the file is physically located on the first device or if the file is a virtual file of a corresponding file physically stored on

a second device by reviewing file metadata, wherein a visual representation of the singular file system on the first device is identical to a visual representation of the singular file system on the second device; and

if the file is the virtual file of the corresponding file physically located on the second device, requesting by the software client on the first device that a peer-to-peer connection be brokered by a server-based web service between the first device and the second device;

if the peer-to-peer connection is brokered, transferring the corresponding physical file from the second device to the first device; and

performing the operation on the transferred corresponding physical file at the first device.

Claim 4 (Cancelled)

Claim 5 (Currently Amended)

The process according to claim 1, further comprising updating metadata of the singular file system on the first device and the second device to reflect a change in physical location of the file from the second device to the ~~second~~ first device.

Claim 8 (Currently Amended)

A non-transitory computer-readable storage medium storing a set of instructions that, when executed by a processor, cause the processor to perform operations, comprising:

accepting a request to operate on a file at a first device, wherein the file is selected from the singular file system on the first device;

modifying the singular file system on the first device to make local files and virtual files appear indistinguishable to the singular file system, the local files and virtual files sharing a same location on the first device;

intercepting the request by a software client on the first device;

determining by the software client if the file is physically located on the first device or if the file is a virtual file of a corresponding file physically stored on a second device by reviewing file metadata, wherein a visual representation of the singular file system on the first device is identical to a visual representation of the singular file system on the second device; and

if the file is the virtual file of the corresponding file physically located on the second device, requesting by the software client on the first device that a peer-to-peer connection be brokered by a server-based web service between the first device and the second device;

if the peer-to-peer connection is brokered, transferring the corresponding physical file from the second device to the first device; and

performing the operation on the transferred corresponding physical file at the first device.

Claim 9 (Currently Amended)

A client comprising:

a memory;

at least one processor configured to:

accept a request to operate on a file at a first device, wherein the file is selected from the singular file system on the first device;

modify the singular file system on the first device to make local files and virtual files appear indistinguishable to the singular file system, the local files and virtual files sharing a same location on the first device;

intercept the request by a software client on the first device;

determine by the software client if the file is physically located on the first device or if the file is a virtual file of a corresponding file physically stored on a second device by reviewing file metadata, wherein a visual representation of the singular file system on the first device is identical to a visual representation of the singular file system on the second device; and

if the file is the virtual file of the corresponding file physically located on the second device, request by the software client on the first device that a peer-to-peer connection be brokered by a server-based web service between the first device and the second device;

if the peer-to-peer connection is brokered, transfer the corresponding physical file from the second device to the first device; and

perform the operation on the transferred corresponding physical file at the first device.

The Examiner's amendment has been made in order to place the application in a condition for allowance.

Reasons for Allowance

3. The following is an examiner's statement of reason for allowance:

Claims 1, 8-9 are considered allowable since the prior made of record and considered pertinent to the applicant's disclosure does not teach or suggest the claimed limitations. The Prior Art does not teach the claimed invention having a process for operating on files located on multiple devices using a singular file system comprising accepting a request to operate on a file at a first device; modifying the singular file system on the first device to make local files and virtual files appear indistinguishable to the singular file system, the local files and virtual files sharing a same location on the first device; determining by the software client if the file is physically located on the first device or if the file is a virtual file of a corresponding file physically stored on a second device by reviewing file metadata, wherein a visual representation of the singular file system on the first device is identical to a visual representation of the singular file system on the second device with a combination of all recitations as defined in claims 1, 8-9.

Therefore, claims 1-3, 5-9 *are* presently allowed.

4. Any comments considered necessary by applicant must be submitted no later than the payment of the issue fee and, to avoid processing delays, should

preferably accompany the issue fee. Such submissions should be clearly labeled "Comments on Statement of Reasons for Allowance."

Inquiry

5. Any inquiry concerning this communication or earlier communications from the examiner should be directed to Binh V. Ho whose telephone number is 571 272 8583. The examiner can normally be reached on M-F from 8:00AM - 4:30PM.

If attempts to reach the examiner by telephone are unsuccessful, the examiner's supervisor, Tony Mahmoudi can be reached on 571 272 4078. The fax phone number for the organization where this application or proceeding is assigned is 571-273-8300.

Information regarding the status of an application may be obtained from the Patent Application Information Retrieval (PAIR) system. Status information for published applications may be obtained from either Private PAIR or Public PAIR. Status information for unpublished applications is available through Private PAIR only. For more information about the PAIR system, see http://pair-direct.uspto.gov. Should you have questions on access to the Private PAIR system, contact the Electronic Business Center (EBC) at 866-217-9197 (toll-free).

/Binh Van Ho/
Primary Examiner, Art Unit 2163

Binh V Ho
Examiner
Art Unit 2163

Notice of References Cited	Application/Control No. 13/424,366	Applicant(s)/Patent Under Reexamination CASO ET AL.	
	Examiner BINH V. HO	Art Unit 2163	Page 1 of 1

U.S. PATENT DOCUMENTS

*		Document Number Country Code-Number-Kind Code	Date MM-YYYY	Name	Classification
*	A	US-2006/0161585	07-2006	Clarke et al.	707/104.1
*	B	US-2005/0256909	11-2005	Aboulhosn et al.	707/200
*	C	US-2003/0009587	01-2003	Harrow et al.	709/238
*	D	US-2004/0148434	07-2004	Matsubara et al.	709/246
*	E	US-2006/0161516	07-2006	Clarke et al.	707/002
*	F	US-2011/0110568	05-2011	Vesper et al.	382/128
*	G	US-2012/0079117	03-2012	Wills et al.	709/226
	H	US-			
	I	US-			
	J	US-			
	K	US-			
	L	US-			
	M	US-			

FOREIGN PATENT DOCUMENTS

*		Document Number Country Code-Number-Kind Code	Date MM-YYYY	Country	Name	Classification
	N					
	O					
	P					
	Q					
	R					
	S					
	T					

NON-PATENT DOCUMENTS

*		Include as applicable: Author, Title Date, Publisher, Edition or Volume, Pertinent Pages)
	U	
	V	
	W	
	X	

*A copy of this reference is not being furnished with this Office action. (See MPEP § 707.05(a).)
Dates in MM-YYYY format are publication dates. Classifications may be US or foreign.

Dropbox Exhibit 1002 - Page 25
Dropbox, Inc. v. Entangled Media, LLC
IPR2024-00285 - U.S. Patent No. 8,484,260

Search Notes	Application/Control No.	Applicant(s)/Patent Under Reexamination
	13424366	CASO ET AL.
	Examiner	Art Unit
	BINH V HO	2163

CPC- SEARCHED		
Symbol	Date	Examiner

CPC COMBINATION SETS - SEARCHED		
Symbol	Date	Examiner

US CLASSIFICATION SEARCHED			
Class	Subclass	Date	Examiner
707	827	10/20/2012	BH

SEARCH NOTES		
Search Notes	Date	Examiner
707/827; 717/176 East search (see printout)	10/20/2012	BH
East search (Inventors)	10/20/2012	BH
Interference East search (see Printout)	10/20/2012	BH
East search (U.S. Pub.)	10/20/2012	BH
Update East search (see printout)	03/09/2013	BH

INTERFERENCE SEARCH			
US Class/ CPC Symbol	US Subclass / CPC Group	Date	Examiner
717	176	03/09/2013	BH

Modified form PTO/SB/08A(04-07) OMB 651-0031
US Patent & Trademark Office: U.S. DEPARTMENT OF COMMERCE
Under the Paperwork Reduction Act of 1995, no persons are required to respond to a collection of information unless it contains a valid OMB control number.

Substitute for form 1449A/PTO **INFORMATION DISCLOSURE STATEMENT BY APPLICANT** (Use as many sheets as necessary)	*Complete if Known*	
	Application Number	13/424,366
	Filing Date	March 19, 2012
	First Named Inventor	Erik Caso
	Group Art Unit	2163
	Examiner Name	Binh Ho
Sheet 1 of 1	Attorney Docket No: 3689.001US2	

US PATENT DOCUMENTS

Examiner Initial *	USP Document Number	Publication Date	Name of Patentee or Applicant of cited Document
	US-20080082490 A1	4/3/2008	MacLaurin, Matthew B, et al.
	US-20080189390 A1	8/7/2008	Heller, David, et al.
	US-20090062944 A1	3/5/2009	Wood, Policarpo, et al.
	US-20100205152 A1	8/12/2010	Ansari, Amir, et al.
	US-20100274982 A1	10/28/2010	Mehr, John D, et al.
	US-20110093471 A1	4/21/2011	Brockway, Brian, et al.
	US-20110231844 A1	9/22/2011	Ben-Shaul, Israel Zvi, et al.
	US-7,805,565	9/28/2010	Milligan, Charles, et al.
	US-8,296,338	10/23/2012	Caso, Erik, et al.

FOREIGN PATENT DOCUMENTS

Examiner Initial *	Foreign Document Number	Publication Date	Name of Patentee or Applicant of cited Document	T 1
	WO-0114634 A1	3/1/2001	Johnson, Barry C.	
	WO-0140887 A1	6/7/2001	Hesslink, Lambertus, et al.	
	WO-0203046 A2	1/10/2002		

OTHER DOCUMENTS – NON PATENT LITERATURE DOCUMENTS

Examiner Initial *	Include name of the author (in CAPITAL LETTERS), title of the article (when appropriate), title of the item (book, magazine, journal, serial, symposium, catalog, etc.), date, page(s), volume-issue number(s), publisher, city and/or country where published.	T 1
	"Application Serial No. 12/774,231, Notice of Allowance mailed 09-12-12", 14 pgs	
	"Application Serial No. 12/774,231, Response filed 07/20/12 to Non Final Office Action mailed 04/26/12", 11 pgs.	

ALL REFERENCES CONSIDERED EXCEPT WHERE LINED THROUGH. /B.H./

EXAMINER	/Binh Ho/	DATE CONSIDERED	03/10/2013

* EXAMINER: Initial if reference considered, whether or not citation is in conformance with MPEP 609. Draw line through citation if not in conformance and not considered. Include copy of this form with next communication to applicant. 1 Applicant is to place a check mark here if English language Translation is attached

Index of Claims	Application/Control No.	Applicant(s)/Patent Under Reexamination
	13424366	CASO ET AL.
	Examiner	**Art Unit**
	BINH V HO	2163

✓	Rejected	-	Cancelled	N	Non-Elected	A	Appeal
=	Allowed	÷	Restricted	I	Interference	O	Objected

☐ Claims renumbered in the same order as presented by applicant ☐ CPA ☐ T.D. ☐ R.1.47

CLAIM		DATE								
Final	Original	10/20/2012	03/09/2013							
1	1	✓	=							
2	2	✓	=							
3	3	✓	=							
	4	✓	-							
4	5	✓	=							
5	6		=							
6	7		=							
7	8		=							
8	9		=							

Dropbox Exhibit 1002 - Page 28
Dropbox, Inc. v. Entangled Media, LLC
IPR2024-00285 - U.S. Patent No. 8,484,260

EAST Search History

EAST Search History (Prior Art)

Ref #	Hits	Search Query	DBs	Default Operator	Plurals	Time Stamp
L1	7	717/168.ccls. and (install$6 multipl$4 device user) with software and registrat$4 and inventor$4 and index$4	US-PGPUB; USPAT; USOCR; FPRS; EPO; JPO; DERWENT; IBM_TDB	OR	ON	2013/03/10 09:40
L2	13	707/827.ccls. and (install$6 multipl$4 device user) with software and registrat$4 and inventor$4 and index$4	US-PGPUB; USPAT; USOCR; FPRS; EPO; JPO; DERWENT; IBM_TDB	OR	ON	2013/03/10 09:41
L3	4	(("20110110568" | "20050144195" | "20050256909" | "20090254592" | "6512586" | "20030009587" | "20050114711" | "6732158" | "6938042" | "20060161516" | "20040172449" | "20050138186" | "20050144200" | "20060161585" | "20080104077" | "20040148434" | "20060161516" | "20060277314" | "7337171" | "7587471" | "7600036" | "20060161585" | "20050149481" | "20070162510" | "6381019" | "6499054" | "7546353" | "20040148434" | "20120079117" | "20030009587" | "20060206533" | "7120692" | "7467187" | "7499905" | "7587467" | "20050256909" | "20110110568" | "20120079117").PN.) and (((peer near4 peer) p2p) with (request$4 near5 file))	US-PGPUB; USPAT; USOCR; FPRS; EPO; JPO; DERWENT; IBM_TDB	OR	ON	2013/03/10 10:05
L4	2	(("20080082490" "20080189390" "20090062944" "20100205152" "20100274982" "20110093471" "20110231844" "7805565" "8296338").PN.) and (((peer near4 peer) p2p) with (request$4 near5 file))	US-PGPUB; USPAT; USOCR; FPRS; EPO; JPO; DERWENT; IBM_TDB	OR	ON	2013/03/10 10:08
S1	2	"20100287219"	US-PGPUB; USPAT; USOCR; FPRS; EPO; JPO; DERWENT; IBM_TDB	OR	ON	2011/12/23 16:55
S2	266	707/827.ccls.	US-PGPUB; USPAT; USOCR; FPRS;	OR	ON	2011/12/23 16:59

Dropbox Exhibit 1002 - Page 29
Dropbox, Inc. v. Entangled Media, LLC
IPR2024-00285 - U.S. Patent No. 8,484,260

			EPO; JPO; DERWENT; IBM_TDB			
S3	770	717/176.ccls.	US-PGPUB; USPAT; USOCR; FPRS; EPO; JPO; DERWENT; IBM_TDB	OR	ON	2011/12/23 17:00
S5	151	michael with abraham	US-PGPUB; USPAT; USOCR; FPRS; EPO; JPO; DERWENT; IBM_TDB	OR	ON	2011/12/23 17:01
S6	53	("20040172449" | "20050114711" | "20050138186" | "20050144195" | "20050144200" | "20050149481" | "20050256909" | "20060206533" | "20060277314" | "20070162510" | "20080104077" | "20090254592" | "6381019" | "6499054" | "6512586" | "6732158" | "6938042" | "7120692" | "7337171" | "7467187" | "7499905" | "7546353" | "7587467" | "7587471" | "7600036").PN.	US-PGPUB; USPAT; USOCR; FPRS; EPO; JPO; DERWENT; IBM_TDB	OR	ON	2012/01/31 19:01
S7	6	("7747999" "20030221190" "7266595").pn.	US-PGPUB; USPAT; USOCR; FPRS; EPO; JPO; DERWENT; IBM_TDB	OR	ON	2012/01/31 21:14
S8	5	("7747999" "20030221190" "7266595").pn. and (install$4)	US-PGPUB; USPAT; USOCR; FPRS; EPO; JPO; DERWENT; IBM_TDB	OR	ON	2012/01/31 21:18
S9	5	erik with caso	US-PGPUB; USPAT; USOCR; FPRS; EPO; JPO; DERWENT; IBM_TDB	OR	ON	2012/01/31 21:18
S10	1881	(install$6 same multipl$4 same (device user)).ti.	US-PGPUB; USPAT; USOCR; FPRS; EPO; JPO; DERWENT; IBM_TDB	OR	ON	2012/01/31 21:22
S11	14	(install$6 same software same multipl$4 same (device user)).ti.	US-PGPUB; USPAT; USOCR; FPRS; EPO; JPO;	OR	ON	2012/01/31 21:25

Dropbox Exhibit 1002 - Page 30
Dropbox, Inc. v. Entangled Media, LLC
IPR2024-00285 - U.S. Patent No. 8,484,260

			DERWENT; IBM_TDB			
S12	7366	717/168-178.ccls.	US-PGPUB; USPAT; USOCR; FPRS; EPO; JPO; DERWENT; IBM_TDB	OR	ON	2012/01/31 21:32
S14	5793	717/168-178.ccls. and (install$6 multipl$4 device user) with software	US-PGPUB; USPAT; USOCR; FPRS; EPO; JPO; DERWENT; IBM_TDB	OR	ON	2012/01/31 21:33
S15	756	717/168-178.ccls. and (install$6 multipl$4 device user) with software and registrat$4	US-PGPUB; USPAT; USOCR; FPRS; EPO; JPO; DERWENT; IBM_TDB	OR	ON	2012/01/31 21:33
S16	390	717/168-178.ccls. and (install$6 multipl$4 device user) with software and registrat$4 and inventor$4	US-PGPUB; USPAT; USOCR; FPRS; EPO; JPO; DERWENT; IBM_TDB	OR	ON	2012/01/31 21:34
S17	79	717/168-178.ccls. and (install$6 multipl$4 device user) with software and registrat$4 and inventor$4 and index$4	US-PGPUB; USPAT; USOCR; FPRS; EPO; JPO; DERWENT; IBM_TDB	OR	ON	2012/01/31 21:36
S18	1	"20100287219" and peer-to-peer	US-PGPUB; USPAT; USOCR; FPRS; EPO; JPO; DERWENT; IBM_TDB	OR	ON	2012/01/31 21:59
S22	6	("20060077189" "20080195693" "20090319635").pn. and (monitor device software install$6 inventor$4 plug$1in)	US-PGPUB; USPAT; USOCR; FPRS; EPO; JPO; DERWENT; IBM_TDB	OR	ON	2012/04/12 23:10
S23	0	(("20040172449" | "20050114711" | "20050138186" | "20050144195" | "20050144200" | "20050149481" | "20050256909" | "20060206533" | "20060277314" | "20070162510" | "20080104077" | "20090254592" | "6381019" | "6499054" | "6512586" | "6732158" | "6938042" | "7120692" | "7337171" | "7467187" | "7499905" | "7546353" | "7587467" | "7587471" |	US-PGPUB; USPAT; USOCR; FPRS; EPO; JPO; DERWENT; IBM_TDB	OR	ON	2012/04/13 18:05

Dropbox Exhibit 1002 - Page 31
Dropbox, Inc. v. Entangled Media, LLC
IPR2024-00285 - U.S. Patent No. 8,484,260

		"7600036").PN.) and cloud				
S24	1	(("20040172449" | "20050114711" | "20050138186" | "20050144195" | "20050144200" | "20050149481" | "20050256909" | "20060206533" | "20060277314" | "20070162510" | "20080104077" | "20090254592" | "6381019" | "6499054" | "6512586" | "6732158" | "6938042" | "7120692" | "7337171" | "7467187" | "7499905" | "7546353" | "7587467" | "7587471" | "7600036").PN.) and index	US-PGPUB; USPAT; USOCR; FPRS; EPO; JPO; DERWENT; IBM_TDB	OR	ON	2012/04/13 18:38
S25	31	(michael with abraham) and index	US-PGPUB; USPAT; USOCR; FPRS; EPO; JPO; DERWENT; IBM_TDB	OR	ON	2012/04/13 18:46
S26	25	(michael with abraham) and index and (scan$4 inventor$4 collect$4)	US-PGPUB; USPAT; USOCR; FPRS; EPO; JPO; DERWENT; IBM_TDB	OR	ON	2012/04/13 18:47
S27	4	(cloud$4 same storage same index$4).ti.	US-PGPUB; USPAT; USOCR; FPRS; EPO; JPO; DERWENT; IBM_TDB	OR	ON	2012/04/17 13:08
S28	31	(cloud$4 same storage same index$4).ab.	US-PGPUB; USPAT; USOCR; FPRS; EPO; JPO; DERWENT; IBM_TDB	OR	ON	2012/04/17 14:34
S29	0	(cloud$4 same storage same index$4 same plug$1in).ab.	US-PGPUB; USPAT; USOCR; FPRS; EPO; JPO; DERWENT; IBM_TDB	OR	ON	2012/04/17 14:34
S30	62	(cloud$4 with storage with index$4)	US-PGPUB; USPAT; USOCR; FPRS; EPO; JPO; DERWENT; IBM_TDB	OR	ON	2012/04/17 15:19
S31	5	(cloud$4 with storage with index$4) and plug$1in	US-PGPUB; USPAT; USOCR; FPRS; EPO; JPO; DERWENT; IBM_TDB	OR	ON	2012/04/17 15:19

Dropbox Exhibit 1002 - Page 32
Dropbox, Inc. v. Entangled Media, LLC
IPR2024-00285 - U.S. Patent No. 8,484,260

S40	21	("20100257142" "20100257403" "20100199042" "20100274765" "20100191783" "20100229108" "20110110568" "20110093471" "20090164790" "20100274762" "7636764").pn. and (cloud storage index$4 metadata device log$1in registrat$4 categ$7 class$10 group$4 down$1load$4 up$1load$4 creat$4 collect$4 replicas Redundant$4 duplicat$4 replicat$4)	US-PGPUB; USPAT; USOCR; FPRS; EPO; JPO; DERWENT; IBM_TDB	OR	ON	2012/04/17 22:18
S41	1	(scan$4 collect$4) with ((multipl$4 pluralit$4) near2 device) with (creat$4 near5 index$4)	US-PGPUB; USPAT; USOCR; FPRS; EPO; JPO; DERWENT; IBM_TDB	OR	ON	2012/04/17 22:38
S42	3	(("20040172449" | "20050114711" | "20050138186" | "20050144195" | "20050144200" | "20050149481" | "20050256909" | "20060206533" | "20060277314" | "20070162510" | "20080104077" | "20090254592" | "6381019" | "6499054" | "6512586" | "6732158" | "6938042" | "7120692" | "7337171" | "7467187" | "7499905" | "7546353" | "7587467" | "7587471" | "7600036").PN.) and (index$4)	US-PGPUB; USPAT; USOCR; FPRS; EPO; JPO; DERWENT; IBM_TDB	OR	ON	2012/04/17 22:40
S44	78	(scan$4 collect$4) with ((multipl$4 pluralit$4) near2 device) with index$4	US-PGPUB; USPAT; USOCR; FPRS; EPO; JPO; DERWENT; IBM_TDB	OR	ON	2012/04/17 22:42
S45	38	(scan$4 collect$4) near5 ((multipl$4 pluralit$4) near2 device) with index$4	US-PGPUB; USPAT; USOCR; FPRS; EPO; JPO; DERWENT; IBM_TDB	OR	ON	2012/04/17 22:42
S47	1	singlular near3 (file index$4)	US-PGPUB; USPAT; USOCR; FPRS; EPO; JPO; DERWENT; IBM_TDB	OR	ON	2012/04/18 14:07
S49	141	((set$1up request$4) near5 account$4) with up$1load$4	US-PGPUB; USPAT; USOCR; FPRS; EPO; JPO; DERWENT; IBM_TDB	OR	ON	2012/04/18 14:52
S50	6	((set$1up request$4) near5 account$4) with up$1load$4 with (categ$8 class$10 group$4)	US-PGPUB; USPAT; USOCR; FPRS; EPO; JPO;	OR	ON	2012/04/18 14:53

Dropbox Exhibit 1002 - Page 33
Dropbox, Inc. v. Entangled Media, LLC
IPR2024-00285 - U.S. Patent No. 8,484,260

			DERWENT; IBM_TDB			
S51	0	up$1load$4 with (categ$8 class$10 group$4) with cloud with index$4	US-PGPUB; USPAT; USOCR; FPRS; EPO; JPO; DERWENT; IBM_TDB	OR	ON	2012/04/18 19:57
S52	13	up$1load$4 with (categ$8 class$10 group$4) with cloud	US-PGPUB; USPAT; USOCR; FPRS; EPO; JPO; DERWENT; IBM_TDB	OR	ON	2012/04/18 19:57
S53	0	(cloud$4 same up$1load$4 same index$4).ti.	US-PGPUB; USPAT; USOCR; FPRS; EPO; JPO; DERWENT; IBM_TDB	OR	ON	2012/04/18 20:34
S54	1	(cloud$4 same up$1load$4 same index$4).ab.	US-PGPUB; USPAT; USOCR; FPRS; EPO; JPO; DERWENT; IBM_TDB	OR	ON	2012/04/18 20:34
S55	5	(storag$4 same up$1load$4 same index$4).ti.	US-PGPUB; USPAT; USOCR; FPRS; EPO; JPO; DERWENT; IBM_TDB	OR	ON	2012/04/18 20:35
S56	57	(storag$4 same up$1load$4 same index$4).ab.	US-PGPUB; USPAT; USOCR; FPRS; EPO; JPO; DERWENT; IBM_TDB	OR	ON	2012/04/18 20:39
S57	20	(storag$4 same up$1load$4 same index$4 same device).ab.	US-PGPUB; USPAT; USOCR; FPRS; EPO; JPO; DERWENT; IBM_TDB	OR	ON	2012/04/18 20:39
S62	1	"20120079117" and (pluralit$4 multipl$4 scan$4 collect$4 class$10 group$4 categ$8 index$4 registrat$4 log$1in device)	US-PGPUB; USPAT; USOCR; FPRS; EPO; JPO; DERWENT; IBM_TDB	OR	ON	2012/04/18 22:45
S63	3	(BLACKBURN with DAVID with A$1) and (storag$4 same up$1load$4 same index$4 same device) and (class$10	US-PGPUB; USPAT; USOCR;	OR	ON	2012/04/18 22:46

Dropbox Exhibit 1002 - Page 34
Dropbox, Inc. v. Entangled Media, LLC
IPR2024-00285 - U.S. Patent No. 8,484,260

		categ$7 group$4 device)	FPRS; EPO; JPO; DERWENT; IBM_TDB			
S67	2	("20110110568" "20120079117") and (pluralit$4 multipl$4 scan$4 collect$4 class$10 group$4 categ$8 index$4 registrat$4 log$1in device account$4 log$1in cloud$4 transfer$4)	US-PGPUB; USPAT; USOCR; FPRS; EPO; JPO; DERWENT; IBM_TDB	OR	ON	2012/04/18 23:30
S68	160	(set$1up$4 log$1in Account$4) near5 servic$4 near5 (cloud$4 back$1up)	US-PGPUB; USPAT; USOCR; FPRS; EPO; JPO; DERWENT; IBM_TDB	OR	ON	2012/04/19 10:44
S69	41	((set$1up$4 log$1in Account$4) near5 servic$4 near5 (cloud$4 back$1up)) and index$4	US-PGPUB; USPAT; USOCR; FPRS; EPO; JPO; DERWENT; IBM_TDB	OR	ON	2012/04/19 10:45
S70	19	((set$1up$4 log$1in Account$4) near5 servic$4 near5 (cloud$4 back$1up)) and index$4 and ((multipl$4 pluralit$4) near3 (unit device))	US-PGPUB; USPAT; USOCR; FPRS; EPO; JPO; DERWENT; IBM_TDB	OR	ON	2012/04/19 10:46
S71	19	((set$1up$4 log$1in Account$4) near5 servic$4 near5 (cloud$4 back$1up)) and index$4 and ((multipl$4 pluralit$4) near3 (unit device))	US-PGPUB; USPAT; USOCR; FPRS; EPO; JPO; DERWENT; IBM_TDB	OR	ON	2012/04/19 14:21
S72	19	((set$1up$4 log$1in Account$4) near5 servic$4 near5 (cloud$4 back$1up)) and index$4 and ((multipl$4 pluralit$4) near3 (unit device)) and (class$10 categ$7 group$4)	US-PGPUB; USPAT; USOCR; FPRS; EPO; JPO; DERWENT; IBM_TDB	OR	ON	2012/04/19 14:22
S75	6	("20110110568" "20120079117" "20080082490" "20080005168") and (pluralit$4 multipl$4 scan$4 collect$4 class$10 group$4 categ$8 index$4 registrat$4 log$1in device account$4 log$1in cloud$4 transfer$4)	US-PGPUB; USPAT; USOCR; FPRS; EPO; JPO; DERWENT; IBM_TDB	OR	ON	2012/04/19 17:20
S77	6	("20110110568" "20120079117" "20080082490" "20080005168") and (pluralit$4 multipl$4 scan$4 collect$4 class$10 group$4 categ$8 index$4 registrat$4 log$1in device account$4 log$1in cloud$4 transfer$4 updat$4 modif$4 chang$4 individual$4 password)	US-PGPUB; USPAT; USOCR; FPRS; EPO; JPO; DERWENT; IBM_TDB	OR	ON	2012/04/19 22:52
S78	5	categor$7 near5 (document and video	US-PGPUB;	OR	ON	2012/04/20

Dropbox Exhibit 1002 - Page 35
Dropbox, Inc. v. Entangled Media, LLC
IPR2024-00285 - U.S. Patent No. 8,484,260

		and (pictur$4 imag$4 photo) and (music))	USPAT; USOCR; FPRS; EPO; JPO; DERWENT; IBM_TDB			10:55
S79	16	categor$7 near5 (document and video and (pictur$4 imag$4 photo) and (music audio))	US-PGPUB; USPAT; USOCR; FPRS; EPO; JPO; DERWENT; IBM_TDB	OR	ON	2012/04/20 10:57
S83	2	creat$4 near3 virtual near4 (represent$6 display$4) near5 data near5 devices with (metadata index$4)	US-PGPUB; USPAT; USOCR; FPRS; EPO; JPO; DERWENT; IBM_TDB	OR	ON	2012/04/20 12:23
S84	80	light$1weight$4 near5 metadata	US-PGPUB; USPAT; USOCR; FPRS; EPO; JPO; DERWENT; IBM_TDB	OR	ON	2012/04/20 12:26
S87	22	light$1weight$4 near5 metadata and index$4	US-PGPUB; USPAT; USOCR; FPRS; EPO; JPO; DERWENT; IBM_TDB	OR	ON	2012/04/20 12:28
S88	45	light$1weight$4 near5 metadata and virtual$4	US-PGPUB; USPAT; USOCR; FPRS; EPO; JPO; DERWENT; IBM_TDB	OR	ON	2012/04/20 12:29
S89	13	light$1weight$4 near5 metadata and virtual$4 and index$4	US-PGPUB; USPAT; USOCR; FPRS; EPO; JPO; DERWENT; IBM_TDB	OR	ON	2012/04/20 12:29
S90	5340	virtual$4 near5 store$3 near5 device	US-PGPUB; USPAT; USOCR; FPRS; EPO; JPO; DERWENT; IBM_TDB	OR	ON	2012/04/20 13:21
S91	37	(virtual$4 near5 store$3 near5 device) with metadata	US-PGPUB; USPAT; USOCR; FPRS; EPO; JPO; DERWENT;	OR	ON	2012/04/20 13:22

Dropbox Exhibit 1002 - Page 36
Dropbox, Inc. v. Entangled Media, LLC
IPR2024-00285 - U.S. Patent No. 8,484,260

			IBM_TDB			
S92	144	(virtual$4 near5 stor$5 near5 device) with metadata	US-PGPUB; USPAT; USOCR; FPRS; EPO; JPO; DERWENT; IBM_TDB	OR	ON	2012/09/06 19:43
S93	5	index$4 with (virtual$4 near5 stor$5 near5 device) with metadata	US-PGPUB; USPAT; USOCR; FPRS; EPO; JPO; DERWENT; IBM_TDB	OR	ON	2012/09/06 19:43
S99	72	(meta-index$4 meta$1index$4 index$4) with (virtual$4 near5 storage near5 device)	US-PGPUB; USPAT; USOCR; FPRS; EPO; JPO; DERWENT; IBM_TDB	OR	ON	2012/09/06 19:52
S101	5	(meta-index$4 meta$1index$4 index$4 metaindex$4) with (virtual$4 near5 storage near5 device) with metadata	US-PGPUB; USPAT; USOCR; FPRS; EPO; JPO; DERWENT; IBM_TDB	OR	ON	2012/09/06 19:53
S102	336	(scan$4 collect$4) with ((multipl$4 pluralit$4) near2 device) with software	US-PGPUB; USPAT; USOCR; FPRS; EPO; JPO; DERWENT; IBM_TDB	OR	ON	2012/09/06 19:54
S103	3	(scan$4 collect$4) with ((multipl$4 pluralit$4) near2 device) with software with $5index$4	US-PGPUB; USPAT; USOCR; FPRS; EPO; JPO; DERWENT; IBM_TDB	OR	ON	2012/09/06 19:55
S104	1	"12726412"	US-PGPUB; USPAT; USOCR; FPRS; EPO; JPO; DERWENT; IBM_TDB	OR	ON	2012/09/06 20:38
S111	161	michael with abraham	US-PGPUB; USPAT; USOCR; FPRS; EPO; JPO; DERWENT; IBM_TDB	OR	ON	2012/10/19 19:12
S112	374	707/827.ccls.	US-PGPUB; USPAT; USOCR; FPRS;	OR	ON	2012/10/19 19:12

Dropbox Exhibit 1002 - Page 37
Dropbox, Inc. v. Entangled Media, LLC
IPR2024-00285 - U.S. Patent No. 8,484,260

			EPO; JPO; DERWENT; IBM_TDB			
S113	888	717/176.ccls.	US-PGPUB; USPAT; USOCR; FPRS; EPO; JPO; DERWENT; IBM_TDB	OR	ON	2012/10/19 19:12
S114	9	erik with caso	US-PGPUB; USPAT; USOCR; FPRS; EPO; JPO; DERWENT; IBM_TDB	OR	ON	2012/10/19 19:12
S115	2	"20120179732"	US-PGPUB; USPAT; USOCR; FPRS; EPO; JPO; DERWENT; IBM_TDB	OR	ON	2012/10/19 19:13
S116	12	(("20040172449" | "20050114711" | "20050138186" | "20050144195" | "20050144200" | "20050149481" | "20050256909" | "20060206533" | "20060277314" | "20070162510" | "20080104077" | "20090254592" | "6381019" | "6499054" | "6512586" | "6732158" | "6938042" | "7120692" | "7337171" | "7467187" | "7499905" | "7546353" | "7587467" | "7587471" | "7600036").PN.) and ((peer near4 peer))	US-PGPUB; USPAT; USOCR; FPRS; EPO; JPO; DERWENT; IBM_TDB	OR	ON	2012/10/19 21:33
S123	2	"20110110568" and (cloud online offline metadata connect$4 disconnect$4 broke$4 p2p (peer near4 peer) request$4 download$4 transfer$5 server file software locat$4 determin$4 select$4 rout$4 internet$4 alternat$5)	US-PGPUB; USPAT; USOCR; FPRS; EPO; JPO; DERWENT; IBM_TDB	OR	ON	2012/10/20 14:00
S124	8591	(transfer$6 near3 file) near5 (((peer near4 peer) p2p) (intenet http))	US-PGPUB; USPAT; USOCR; FPRS; EPO; JPO; DERWENT; IBM_TDB	OR	ON	2012/10/20 15:06
S125	26	(transfer$6 near2 file) near5 (((peer near4 peer) p2p) (intenet http)) near5 alternat$5	US-PGPUB; USPAT; USOCR; FPRS; EPO; JPO; DERWENT; IBM_TDB	OR	ON	2012/10/20 15:07
S126	2	("20100017500").pn. and (online offline connect$4 transfer request$4)	US-PGPUB; USPAT; USOCR; FPRS; EPO; JPO;	OR	ON	2012/10/20 16:53

Dropbox Exhibit 1002 - Page 38
Dropbox, Inc. v. Entangled Media, LLC
IPR2024-00285 - U.S. Patent No. 8,484,260

			DERWENT; IBM_TDB			
S128	145	(p2p (peer near4 peer)) with (request$ near4 file) with transfer$4	US-PGPUB; USPAT; USOCR; FPRS; EPO; JPO; DERWENT; IBM_TDB	OR	ON	2012/10/20 17:19
S129	3	(p2p (peer near4 peer)) with (request$ near4 file) with transfer$4 with (offline disconnect$4 broke$4)	US-PGPUB; USPAT; USOCR; FPRS; EPO; JPO; DERWENT; IBM_TDB	OR	ON	2012/10/20 17:20
S130	14	(("20040172449" | "20050114711" | "20050138186" | "20050144195" | "20050144200" | "20050149481" | "20050256909" | "20060206533" | "20060277314" | "20070162510" | "20080104077" | "20090254592" | "6381019" | "6499054" | "6512586" | "6732158" | "6938042" | "7120692" | "7337171" | "7467187" | "7499905" | "7546353" | "7587467" | "7587471" | "7600036").PN.) and ((peer near4 peer)p2p disconnect$4 offline)	US-PGPUB; USPAT; USOCR; FPRS; EPO; JPO; DERWENT; IBM_TDB	OR	ON	2012/10/20 17:33
S131	75	("2005/0256909").URPN.	USPAT	OR	ON	2012/10/20 17:49
S132	1	"20050256909" and (request$4 select$4 updat$4 broker$4 p2p (peer near4 peer) connect$4 http chang$4 alternat$4 file)	USPAT	OR	ON	2012/10/20 21:02
S133	1	"20050256909"	USPAT	OR	ON	2012/10/20 21:03
S134	48	(("20040172449" | "20050114711" | "20050138186" | "20050144195" | "20050144200" | "20050149481" | "20050256909" | "20060206533" | "20060277314" | "20070162510" | "20080104077" | "20090254592" | "6381019" | "6499054" | "6512586" | "6732158" | "6938042" | "7120692" | "7337171" | "7467187" | "7499905" | "7546353" | "7587467" | "7587471" | "7600036").PN.) and (request$4 select$4 updat$4 broker$4 p2p (peer near4 peer) connect$4 http chang$4 alternat$4 file offline online disconnect$4)	US-PGPUB; USPAT; USOCR; FPRS; EPO; JPO; DERWENT; IBM_TDB	OR	ON	2012/10/20 21:05
S135	698	(((peer near4 peer) p2p) with (request$4 near5 file))	US-PGPUB; USPAT; USOCR; FPRS; EPO; JPO; DERWENT; IBM_TDB	OR	ON	2012/10/20 21:53
S140	3	(((peer near4 peer) p2p) with (request$4 near5 file)) and (connect$4 near5 offline)	US-PGPUB; USPAT; USOCR; FPRS; EPO; JPO;	OR	ON	2012/10/20 21:58

Dropbox Exhibit 1002 - Page 39
Dropbox, Inc. v. Entangled Media, LLC
IPR2024-00285 - U.S. Patent No. 8,484,260

			DERWENT; IBM_TDB			
S142	289	((request$4 near5 file) near5 ((peer near4 peer) p2p)) and ((peer near4 peer) p2p) near5 connect$4	US-PGPUB; USPAT; USOCR; FPRS; EPO; JPO; DERWENT; IBM_TDB	OR	ON	2012/10/20 22:09
S143	26	((request$4 near5 file) near5 ((peer near4 peer) p2p)) and (((peer near4 peer) p2p) near5 connect$4) with (offline online disconnect$4)	US-PGPUB; USPAT; USOCR; FPRS; EPO; JPO; DERWENT; IBM_TDB	OR	ON	2012/10/20 22:11
S144	8963	(select$4 near5 method near5 transfer$4)	US-PGPUB; USPAT; USOCR; FPRS; EPO; JPO; DERWENT; IBM_TDB	OR	ON	2012/10/20 22:34
S145	0	(select$4 near5 method near5 transfer$4) with (((peer near4 peer) p2p) with (alternat$4 option))	US-PGPUB; USPAT; USOCR; FPRS; EPO; JPO; DERWENT; IBM_TDB	OR	ON	2012/10/20 22:35
S146	0	(select$4 near5 method near5 transfer$4) with (((peer near4 peer) p2p) same (alternat$4 option))	US-PGPUB; USPAT; USOCR; FPRS; EPO; JPO; DERWENT; IBM_TDB	OR	ON	2012/10/20 22:35
S147	6	("20080071907" "20040148434" "20100017500").pn. and ((peer near4 peer) p2p offline http)	US-PGPUB; USPAT; USOCR; FPRS; EPO; JPO; DERWENT; IBM_TDB	OR	ON	2012/10/20 23:51
S148	487	((peer near4 peer) p2p) near7 (connect$4 availabl$4) near7 ("yes" "no")	US-PGPUB; USPAT; USOCR; FPRS; EPO; JPO; DERWENT; IBM_TDB	OR	ON	2012/10/21 10:42
S149	24	((peer near4 peer) p2p) near7 (connect$4 availabl$4) near7 ("yes" "no") and web near9 transfer$4	US-PGPUB; USPAT; USOCR; FPRS; EPO; JPO; DERWENT; IBM_TDB	OR	ON	2012/10/21 10:42
S150	34	((peer near4 peer) p2p) near7 (connect$4 transfer$4) near7 availabl$4 and web near9 transfer$4	US-PGPUB; USPAT; USOCR;	OR	ON	2012/10/21 10:45

Dropbox Exhibit 1002 - Page 40
Dropbox, Inc. v. Entangled Media, LLC
IPR2024-00285 - U.S. Patent No. 8,484,260

			FPRS; EPO; JPO; DERWENT; IBM_TDB			
S152	3698	transfer$4 near3 (data file) with us$3 near5 (p2p http)	US-PGPUB; USPAT; USOCR; FPRS; EPO; JPO; DERWENT; IBM_TDB	OR	ON	2012/10/21 11:19
S153	10	transfer$4 near3 (data file) with us$3 near5 (p2p and http)	US-PGPUB; USPAT; USOCR; FPRS; EPO; JPO; DERWENT; IBM_TDB	OR	ON	2012/10/21 11:20
S154	3	"20060161585" and (p2p connect$6 identif$7 determin$4 availabl$4 request$4 retriev$4 server locat$4 file)	US-PGPUB; USPAT; USOCR; FPRS; EPO; JPO; DERWENT; IBM_TDB	OR	ON	2012/10/21 15:24
S155	3	"20060161585" and (p2p connect$6 identif$7 determin$4 availabl$4 request$4 retriev$4 server locat$4 file visual$4)	US-PGPUB; USPAT; USOCR; FPRS; EPO; JPO; DERWENT; IBM_TDB	OR	ON	2012/10/21 15:26
S157	27	virtual and ((peer near4 peer) p2p) near7 (connect$4 transfer$4) near7 availabl$4 and web near9 transfer$4	US-PGPUB; USPAT; USOCR; FPRS; EPO; JPO; DERWENT; IBM_TDB	OR	ON	2013/03/09 23:00
S158	9	virtual same ((peer near4 peer) p2p) near7 (connect$4 transfer$4) near7 availabl$4 and web near9 transfer$4	US-PGPUB; USPAT; USOCR; FPRS; EPO; JPO; DERWENT; IBM_TDB	OR	ON	2013/03/09 23:00

03/10/2013 10:09:37 AM
C:\Users\bho\Documents\EAST\Workspaces\13424366.wsp

Dropbox Exhibit 1002 - Page 41
Dropbox, Inc. v. Entangled Media, LLC
IPR2024-00285 - U.S. Patent No. 8,484,260

UNITED STATES PATENT AND TRADEMARK OFFICE

UNITED STATES DEPARTMENT OF COMMERCE
United States Patent and Trademark Office
Address: COMMISSIONER FOR PATENTS
P.O. Box 1450
Alexandria, Virginia 22313-1450
www.uspto.gov

BIB DATA SHEET

CONFIRMATION NO. 5386

SERIAL NUMBER	FILING or 371(c) DATE	CLASS	GROUP ART UNIT	ATTORNEY DOCKET NO.
13/424,366	03/19/2012 RULE	707	2163	3689.001US2

APPLICANTS

Erik Caso, Santa Monica, CA;
Michael Abraham, Boulder, CO;

**** CONTINUING DATA ****************************

This application is a DIV of 12/774,231 05/05/2010 PAT 8,296,338
which claims benefit of 61/175,489 05/05/2009

**** FOREIGN APPLICATIONS ***************************

**** IF REQUIRED, FOREIGN FILING LICENSE GRANTED** ** ** SMALL ENTITY **
03/28/2012

Foreign Priority claimed ☐ Yes ☑ No 35 USC 119(a-d) conditions met ☐ Yes ☐ No Verified and Acknowledged /BINH VAN HO/ Examiner's Signature	☐ Met after Allowance Initials	STATE OR COUNTRY	SHEETS DRAWINGS	TOTAL CLAIMS	INDEPENDENT CLAIMS
		CA	6	8 ~~5~~	3 ~~1~~

ADDRESS

SCHWEGMAN, LUNDBERG & WOESSNER, P.A.
P.O. BOX 2938
MINNEAPOLIS, MN 55402
UNITED STATES

/Binh van Ho/
03/09/2013

TITLE

Method For a Cloud-Based Meta-File System to Virtually Unify Remote and Local Files Across a Range of Devices' Local File Systems

FILING FEE RECEIVED	FEES: Authority has been given in Paper	☐ All Fees
530	No._____ to charge/credit DEPOSIT ACCOUNT	☐ 1.16 Fees (Filing)
	No._____ for following:	☐ 1.17 Fees (Processing Ext. of time)
		☐ 1.18 Fees (Issue)
		☐ Other _____
		☐ Credit

Dropbox Exhibit 1002 - Page 42
Dropbox, Inc. v. Entangled Media, LLC
IPR2024-00285 - U.S. Patent No. 8,484,260

Issue Classification	Application/Control No.	Applicant(s)/Patent Under Reexamination
	13424366	CASO ET AL.
	Examiner	**Art Unit**
	BINH V HO	2163

CPC		
Symbol	**Type**	**Version**

CPC Combination Sets				
Symbol	**Type**	**Set**	**Ranking**	**Version**

US ORIGINAL CLASSIFICATION		INTERNATIONAL CLASSIFICATION	
CLASS	**SUBCLASS**	**CLAIMED**	**NON-CLAIMED**
707	827	G 0 6 F 17 / 30 (2006.01.01)	

CROSS REFERENCE(S)					
CLASS	**SUBCLASS (ONE SUBCLASS PER BLOCK)**				
717	168	176			

NONE	**Total Claims Allowed:**	
(Assistant Examiner) (Date)	8	
/BINH V HO/ Primary Examiner.Art Unit 2163 03/09/2013	O.G. Print Claim(s)	O.G. Print Figure
(Primary Examiner) (Date)	1	4

Dropbox Exhibit 1002 - Page 43
Dropbox, Inc. v. Entangled Media, LLC
IPR2024-00285 - U.S. Patent No. 8,484,260

Issue Classification	Application/Control No.	Applicant(s)/Patent Under Reexamination
	13424366	CASO ET AL.
	Examiner	**Art Unit**
	BINH V HO	2163

NONE		**Total Claims Allowed:**	
(Assistant Examiner)	(Date)	8	
/BINH V HO/ Primary Examiner.Art Unit 2163	03/09/2013	O.G. Print Claim(s)	O.G. Print Figure
(Primary Examiner)	(Date)	1	4

Dropbox Exhibit 1002 - Page 44
Dropbox, Inc. v. Entangled Media, LLC
IPR2024-00285 - U.S. Patent No. 8,484,260

Issue Classification	Application/Control No.	Applicant(s)/Patent Under Reexamination
	13424366	CASO ET AL.
	Examiner	**Art Unit**
	BINH V HO	2163

☐ Claims renumbered in the same order as presented by applicant ☐ CPA ☐ T.D. ☐ R.1.47

Final	Original	Final	Original	Final	Original	Final	Original	Final	Original	Final	Original	Final	Original	Final	Original
1	1														
2	2														
3	3														
	4														
4	5														
5	6														
6	7														
7	8														
8	9														

NONE		**Total Claims Allowed:**	
(Assistant Examiner)	(Date)	8	
/BINH V HO/ Primary Examiner.Art Unit 2163	03/09/2013	O.G. Print Claim(s)	O.G. Print Figure
(Primary Examiner)	(Date)	1	4

Dropbox Exhibit 1002 - Page 45
Dropbox, Inc. v. Entangled Media, LLC
IPR2024-00285 - U.S. Patent No. 8,484,260

UNITED STATES PATENT AND TRADEMARK OFFICE

UNITED STATES DEPARTMENT OF COMMERCE
United States Patent and Trademark Office
Address: COMMISSIONER FOR PATENTS
P.O. Box 1450
Alexandria, Virginia 22313-1450
www.uspto.gov

APPLICATION NO.	FILING DATE	FIRST NAMED INVENTOR	ATTORNEY DOCKET NO.	CONFIRMATION NO.
13/424,366	03/19/2012	Erik Caso	3689.001US2	5386

21186 7590 01/30/2013

SCHWEGMAN, LUNDBERG & WOESSNER, P.A.
P.O. BOX 2938
MINNEAPOLIS, MN 55402

EXAMINER	
HO, BINH VAN	
ART UNIT	PAPER NUMBER
2163	

NOTIFICATION DATE	DELIVERY MODE
01/30/2013	ELECTRONIC

Please find below and/or attached an Office communication concerning this application or proceeding.

The time period for reply, if any, is set in the attached communication.

Notice of the Office communication was sent electronically on above-indicated "Notification Date" to the following e-mail address(es):

uspto@slwip.com
SLW@blackhillsip.com

Dropbox Exhibit 1002 - Page 46
Dropbox, Inc. v. Entangled Media, LLC
IPR2024-00285 - U.S. Patent No. 8,484,260

Applicant-Initiated Interview Summary	**Application No.** 13/424,366	**Applicant(s)** CASO ET AL.	
	Examiner BINH V. HO	**Art Unit** 2163	

All participants (applicant, applicant's representative, PTO personnel):

(1) *BINH V. HO*. (3)_____.

(2) *Thierry Io*. (4)_____.

Date of Interview: *22 January 2013*.

Type: ☒ Telephonic ☐ Video Conference
☐ Personal [copy given to: ☐ applicant ☐ applicant's representative]

Exhibit shown or demonstration conducted: ☐ Yes ☒ No.
If Yes, brief description: _____.

Issues Discussed ☐101 ☐112 ☒102 ☐103 ☐Others
(For each of the checked box(es) above, please describe below the issue and detailed description of the discussion)

Claim(s) discussed: *1*.

Identification of prior art discussed: *Clack (U.S. 2006/0161585)*.

Substance of Interview
(For each issue discussed, provide a detailed description and indicate if agreement was reached. Some topics may include: identification or clarification of a reference or a portion thereof, claim interpretation, proposed amendments, arguments of any applied references etc...)

The Applicant's Representative discussed the difference between proposed claim 1 and Prior Art, in proposed claim language "modifying the singular file system on the first device to make local files and virtual files indistinguishable by the singular file system;", Prior Art fails to discloses the elements above. Agreement was not reached, Attorney will response, and Examiner will consider..

Applicant recordation instructions: The formal written reply to the last Office action must include the substance of the interview. (See MPEP section 713.04). If a reply to the last Office action has already been filed, applicant is given a non-extendable period of the longer of one month or thirty days from this interview date, or the mailing date of this interview summary form, whichever is later, to file a statement of the substance of the interview

Examiner recordation instructions: Examiners must summarize the substance of any interview of record. A complete and proper recordation of the substance of an interview should include the items listed in MPEP 713.04 for complete and proper recordation including the identification of the general thrust of each argument or issue discussed, a general indication of any other pertinent matters discussed regarding patentability and the general results or outcome of the interview, to include an indication as to whether or not agreement was reached on the issues raised.

☐ Attachment

/Binh Van Ho/ Primary Examiner, Art Unit 2163	

Dropbox Exhibit 1002 - Page 47
Dropbox, Inc. v. Entangled Media, LLC
IPR2024-00285 - U.S. Patent No. 8,484,260

Summary of Record of Interview Requirements

Manual of Patent Examining Procedure (MPEP), Section 713.04, Substance of Interview Must be Made of Record
A complete written statement as to the substance of any face-to-face, video conference, or telephone interview with regard to an application must be made of record in the application whether or not an agreement with the examiner was reached at the interview.

Title 37 Code of Federal Regulations (CFR) § 1.133 Interviews
Paragraph (b)

In every instance where reconsideration is requested in view of an interview with an examiner, a complete written statement of the reasons presented at the interview as warranting favorable action must be filed by the applicant. An interview does not remove the necessity for reply to Office action as specified in §§ 1.111, 1.135. (35 U.S.C. 132)

37 CFR §1.2 Business to be transacted in writing.
All business with the Patent or Trademark Office should be transacted in writing. The personal attendance of applicants or their attorneys or agents at the Patent and Trademark Office is unnecessary. The action of the Patent and Trademark Office will be based exclusively on the written record in the Office. No attention will be paid to any alleged oral promise, stipulation, or understanding in relation to which there is disagreement or doubt.

The action of the Patent and Trademark Office cannot be based exclusively on the written record in the Office if that record is itself incomplete through the failure to record the substance of interviews.

It is the responsibility of the applicant or the attorney or agent to make the substance of an interview of record in the application file, unless the examiner indicates he or she will do so. It is the examiner's responsibility to see that such a record is made and to correct material inaccuracies which bear directly on the question of patentability.

Examiners must complete an Interview Summary Form for each interview held where a matter of substance has been discussed during the interview by checking the appropriate boxes and filling in the blanks. Discussions regarding only procedural matters, directed solely to restriction requirements for which interview recordation is otherwise provided for in Section 812.01 of the Manual of Patent Examining Procedure, or pointing out typographical errors or unreadable script in Office actions or the like, are excluded from the interview recordation procedures below. Where the substance of an interview is completely recorded in an Examiners Amendment, no separate Interview Summary Record is required.

The Interview Summary Form shall be given an appropriate Paper No., placed in the right hand portion of the file, and listed on the "Contents" section of the file wrapper. In a personal interview, a duplicate of the Form is given to the applicant (or attorney or agent) at the conclusion of the interview. In the case of a telephone or video-conference interview, the copy is mailed to the applicant's correspondence address either with or prior to the next official communication. If additional correspondence from the examiner is not likely before an allowance or if other circumstances dictate, the Form should be mailed promptly after the interview rather than with the next official communication.

The Form provides for recordation of the following information:
- Application Number (Series Code and Serial Number)
- Name of applicant
- Name of examiner
- Date of interview
- Type of interview (telephonic, video-conference, or personal)
- Name of participant(s) (applicant, attorney or agent, examiner, other PTO personnel, etc.)
- An indication whether or not an exhibit was shown or a demonstration conducted
- An identification of the specific prior art discussed
- An indication whether an agreement was reached and if so, a description of the general nature of the agreement (may be by attachment of a copy of amendments or claims agreed as being allowable). Note: Agreement as to allowability is tentative and does not restrict further action by the examiner to the contrary.
- The signature of the examiner who conducted the interview (if Form is not an attachment to a signed Office action)

It is desirable that the examiner orally remind the applicant of his or her obligation to record the substance of the interview of each case. It should be noted, however, that the Interview Summary Form will not normally be considered a complete and proper recordation of the interview unless it includes, or is supplemented by the applicant or the examiner to include, all of the applicable items required below concerning the substance of the interview.

A complete and proper recordation of the substance of any interview should include at least the following applicable items:
1) A brief description of the nature of any exhibit shown or any demonstration conducted,
2) an identification of the claims discussed,
3) an identification of the specific prior art discussed,
4) an identification of the principal proposed amendments of a substantive nature discussed, unless these are already described on the Interview Summary Form completed by the Examiner,
5) a brief identification of the general thrust of the principal arguments presented to the examiner,
   (The identification of arguments need not be lengthy or elaborate. A verbatim or highly detailed description of the arguments is not required. The identification of the arguments is sufficient if the general nature or thrust of the principal arguments made to the examiner can be understood in the context of the application file. Of course, the applicant may desire to emphasize and fully describe those arguments which he or she feels were or might be persuasive to the examiner.)
6) a general indication of any other pertinent matters discussed, and
7) if appropriate, the general results or outcome of the interview unless already described in the Interview Summary Form completed by the examiner.

Examiners are expected to carefully review the applicant's record of the substance of an interview. If the record is not complete and accurate, the examiner will give the applicant an extendable one month time period to correct the record.

Examiner to Check for Accuracy

If the claims are allowable for other reasons of record, the examiner should send a letter setting forth the examiner's version of the statement attributed to him or her. If the record is complete and accurate, the examiner should place the indication, "Interview Record OK" on the paper recording the substance of the interview along with the date and the examiner's initials.

IN THE UNITED STATES PATENT AND TRADEMARK OFFICE

Applicant:	Erik Caso et al.	Examiner: Binh Ho	
Serial No.:	13/424,366	Group Art Unit: 2163	
Filed:	March 19, 2012	Docket No.: 3689.001US2	
Customer No.: 21186		Confirmation No.: 5386	
Title:	Method For a Cloud-Based Meta-File System to Virtually Unify Remote and Local Files Across a Range of Devices' Local File Systems		

AMENDMENT & RESPONSE UNDER 37 C.F.R. § 1.111

Mail Stop Amendment
Commissioner for Patents
P.O. Box 1450
Alexandria, VA 22313-1450

In response to the Office Action dated October 25, 2012, please amend the application as follows:

IN THE CLAIMS

Please amend the claims as follows:

1. (Currently Amended) A process for operating on files located on multiple devices using a singular file system comprising:

accepting a request to operate on a file at a first device, wherein the file is selected from the singular file system on the first device;

modifying the singular file system on the first device to make local files and virtual files appear indistinguishable to the singular file system, the local files and virtual files sharing a same location on the first device;

intercepting the request by a software client on the first device;

determining by the software client if the file is physically located on the first device or if the file is a virtual file of a corresponding file physically stored on a second device, wherein a visual representation of the singular file system on the first device is identical to a visual representation of the singular file system on the second device; and

if [[a]] the file is the virtual file of the corresponding file physically located on [[a]] the second device, requesting by the software client on the first device that a peer-to-peer connection be brokered by a server-based web service between the first device and the second device;

if the peer-to-peer connection is brokered, transferring the corresponding physical file from the second device to the first device; and

performing the operation on the transferred corresponding physical file at the first device.

2. (Original) The process according to claim 1, wherein if the peer-to-peer connection cannot be brokered between the first device and the second device, an alternative connection is established by the server-based web service.

3. (Original) The process according to claim 2, wherein the alternative connection is an HTTP relay.

4. (Original) The process according to claim 1, wherein the software client determines if the file is physically located on the first device or a second device by reviewing file metadata.

5. (Original) The process according to claim 1, further comprising updating metadata of the singular file system on the first device and the second device to reflect a change in physical location of the file from the second device to the second device.

6. (New) The process according to claim 1, wherein an operating system of the first device is unaware of files being virtual or physical and believes that all files are physically stored on the first device within the singular file system.

7. (New) The process according to claim 1, further comprising:

upon completing the operation, pushing the physical file back to the second device; and

retaining the virtual file at the first device.

8. (New) A non-transitory computer-readable storage medium storing a set of instructions that, when executed by a processor, cause the processor to perform operations, comprising:

accepting a request to operate on a file at a first device, wherein the file is selected from the singular file system on the first device;

modifying the singular file system on the first device to make local files and virtual files appear indistinguishable to the singular file system, the local files and virtual files sharing a same location on the first device;

intercepting the request by a software client on the first device;

determining by the software client if the file is physically located on the first device or if the file is a virtual file of a corresponding file physically stored on a second device, wherein a visual representation of the singular file system on the first device is identical to a visual representation of the singular file system on the second device; and

if the file is the virtual file of the corresponding file physically located on the second device, requesting by the software client on the first device that a peer-to-peer connection be brokered by a server-based web service between the first device and the second device;

if the peer-to-peer connection is brokered, transferring the corresponding physical file from the second device to the first device; and

performing the operation on the transferred corresponding physical file at the first device.

9. (New) A client comprising:

a memory;

at least one processor configured to:

accept a request to operate on a file at a first device, wherein the file is selected from the singular file system on the first device;

modify the singular file system on the first device to make local files and virtual files appear indistinguishable to the singular file system, the local files and virtual files sharing a same location on the first device;

intercept the request by a software client on the first device;

determine by the software client if the file is physically located on the first device or if the file is a virtual file of a corresponding file physically stored on a second device, wherein a visual representation of the singular file system on the first device is identical to a visual representation of the singular file system on the second device; and

if the file is the virtual file of the corresponding file physically located on the second device, request by the software client on the first device that a peer-to-peer connection be brokered by a server-based web service between the first device and the second device;

if the peer-to-peer connection is brokered, transfer the corresponding physical file from the second device to the first device; and

perform the operation on the transferred corresponding physical file at the first device.

REMARKS

This responds to the Office Action dated October 25, 2012.

Claim 1 is amended, and claims 6 and 7 are added; as a result, claims 1-7 are now pending in this application. Amendments to the claims are supported by the originally filed specification, for example, at Paragraph [0028].

New Claims

Claims 6 and 7 are new. Support for the new claims may be found in the specification, such as at Paragraph [0028]. Applicants believe that no new matter has been introduced in the added claims. Additionally, Applicants respectfully submit that the new claims are patentably distinct over the references currently cited as a basis of rejection, such as by virtue of the recited limitation of "modifying the singular file system on the first device to make local files and virtual files appear indistinguishable to the singular file system, the local files and virtual files sharing a same location on the first device."

Accordingly, Applicants respectfully request that the Examiner consider and allow the newly added claims.

Interview Summary

Applicant thanks Examiner Binh Ho for the courtesy of a telephone interview on 1/22/2013 with Applicant's representative Thierry Lo. The rejection of claim 1 under 102, the cited references of Clarke and Aboulhosn were discussed.

The Rejection of Claims Under § 112

Claim 1 is rejected under 35 U.S. C. 112, second paragraph, as being indefinite for failing to particularly point out and distinctly claim the subject matter which applicant regards as the invention. Applicant would like to emphasize that the limitation is "brokered" and not "brokened." As such, Applicants respectfully request that the present rejection be withdrawn.

The Rejection of Claims Under § 102

Claims 1-3 are rejected under 35 U.S.C. 102(b) as being anticipated by Clarke (US 2006/0161585).

Clarke describes a system for accessing a shared file using a peer to peer network or from a web server. The client explicitly determines whether the object being accessed is a shared object. (FIG. 8). As such, the client system in Clarke distinguishes and discriminates locally stored object and shared objects.

In contrast, claim 1 and similarly claims 6 and 7 recites in part "modify the singular file system on the first device to make local files and virtual files appear indistinguishable to the singular file system, the local files and virtual files sharing a same location on the first device." Because the client in Clarke distinguishes and discriminates locally stored object and shared objects, Clarke does not teach or suggest the recited limitation of "modify the singular file system on the first device to make local files and virtual files appear indistinguishable to the singular file system, the local files and virtual files sharing a same location on the first device" as recited in claims 1, 6, and 7.

Because **each and every element** of independent claims 1, 6, and 7 is not disclosed in Gallup, no *prima facie* case of anticipation is established with respect to the independent claims. For at least these reasons, independent claims 1, 6, and 7 and their respective dependent claims are patentable over the cited reference. Moreover, the dependent claims each are patentable based on elements recited therein. Thus, the Examiner is respectfully requested to reconsider and withdraw the rejections under 35 U.S.C. § 102(b) and allow these claims.

The Rejection of Claims Under § 103

Claims 4-5 are rejected under 35 U.S.C. 103(a) as being unpatentable over Clarke (US 2006/0161585) in view of Aboulhosn (U.S. 2007/0050069).

Aboulhosn describes "a virtual file may be a file that has the same name as the file being shared except for an identifying extension, may have no actual content (e.g., a file size of 0), and may have the metadata represented as attributes of the virtual file." Paragraph [0014]. "Display page 200 of FIG. 2 illustrates that M1 has a shared folder named "A" for group "A"210 and a

shared folder named "B" for group "B"220. The parentheticals next to the folder names identify the other members of the group and would typically not be displayed by a file system. Shared folder "A" contains four shared files 211 named "Programl.exe," "Program2.exe.vf," "Textl.txt.vf," and "Text2.txt." The file name extension of "vf' identifies a shared file as a virtual file." Paragraph [0021]. As such, the file system in Aboulhosn uses the file name extension "vf" to discriminate and distinguish between virtual files and local files. Moreover, Aboulhosn describes segregating virtual files or shared files in a shared folder of the file system.

In contrast, claim 1 and similarly claims 6 and 7 recites in part "modify the singular file system on the first device to make local files and virtual files appear indistinguishable to the singular file system, the local files and virtual files sharing a same location on the first device." Because the client in Aboulhosn distinguishes and discriminates virtual files using the name extension "vf", Clarke does not teach or suggest the recited limitation of "modify the singular file system on the first device to make local files and virtual files appear indistinguishable to the singular file system, the local files and virtual files sharing a same location on the first device" as recited in claims 1, 6, and 7.

Applicants submit that the combined teachings of Clarke and Aboulhosn do not teach or suggest the recited limitations of the "modify the singular file system on the first device to make local files and virtual files appear indistinguishable to the singular file system, the local files and virtual files sharing a same location on the first device" as recited in claims 1, 6, and 7. For at least these reasons, independent claims 1, 6, and 7 and their respective dependent claims are patentable over the cited reference. Moreover, the dependent claims each are patentable based on elements recited therein. Thus, the Examiner is respectfully requested to reconsider and withdraw the rejections under 35 U.S.C. § 103(a) and allow these claims.

CONCLUSION

Applicant respectfully submits that the claims are in condition for allowance, and notification to that effect is earnestly requested. The Examiner is invited to telephone Applicant's representative at (949) 354-0200 to facilitate prosecution of this application.

If necessary, please charge any additional fees or deficiencies, or credit any overpayments to Deposit Account No. 19-0743.

Respectfully submitted,

SCHWEGMAN, LUNDBERG & WOESSNER, P.A.
P.O. Box 2938
Minneapolis, MN 55402--0938
(949) 354-0200

Date 23 January 2013

By
Thierry Lo
Reg. No. 49,097

(12) INTERNATIONAL APPLICATION PUBLISHED UNDER THE PATENT COOPERATION TREATY (PCT)

(19) World Intellectual Property Organization
International Bureau

(43) International Publication Date
1 March 2001 (01.03.2001)

PCT

(10) International Publication Number
WO 01/14634 A1

(51) International Patent Classification[7]: D21F 1/00

(21) International Application Number: PCT/US00/22723

(22) International Filing Date: 18 August 2000 (18.08.2000)

(25) Filing Language: English

(26) Publication Language: English

(30) Priority Data:
60/150,068 20 August 1999 (20.08.1999) US

(71) Applicant *(for all designated States except US)*: **ASTEN-JOHNSON, INC.** [US/US]; 4399 Corporate Road, P.O. Box 118001, Charleston, SC 29423-8001 (US).

(72) Inventor; and

(75) Inventor/Applicant *(for US only)*: **JOHNSON, C., Barry** [US/US]; 1186 Waterfront Drive, Mt. Pleasant, SC 29464 (US).

(74) Agents: **VOLPE, Anthony, S.** et al.; Volpe and Koenig, P.C., Suite 400, One Penn Center, 1617 John F. Kennedy Boulevard, Philadelphia, PA 19103 (US).

(81) Designated States *(national)*: AE, AG, AL, AM, AT, AU, AZ, BA, BB, BG, BR, BY, CA, CH, CN, CR, CU, CZ, DE, DK, DM, DZ, EE, ES, FI, GB, GD, GE, GH, GM, HR, HU, ID, IL, IN, IS, JP, KE, KG, KP, KR, KZ, LC, LK, LR, LS, LT, LU, LV, MA, MD, MG, MK, MN, MW, MX, MZ, NO, NZ, PL, PT, RO, RU, SD, SE, SG, SI, SK, SL, TJ, TM, TR, TT, TZ, UA, UG, US, UZ, VN, YU, ZA, ZW.

(84) Designated States *(regional)*: ARIPO patent (GH, GM, KE, LS, MW, MZ, SD, SL, SZ, TZ, UG, ZW), Eurasian patent (AM, AZ, BY, KG, KZ, MD, RU, TJ, TM), European patent (AT, BE, CH, CY, DE, DK, ES, FI, FR, GB, GR, IE, IT, LU, MC, NL, PT, SE), OAPI patent (BF, BJ, CF, CG, CI, CM, GA, GN, GW, ML, MR, NE, SN, TD, TG).

Published:
— *With international search report.*

For two-letter codes and other abbreviations, refer to the "Guidance Notes on Codes and Abbreviations" appearing at the beginning of each regular issue of the PCT Gazette.

(54) Title: MOLDED MODULAR LINK AND A FABRIC MADE FROM A PLURALITY THEREOF

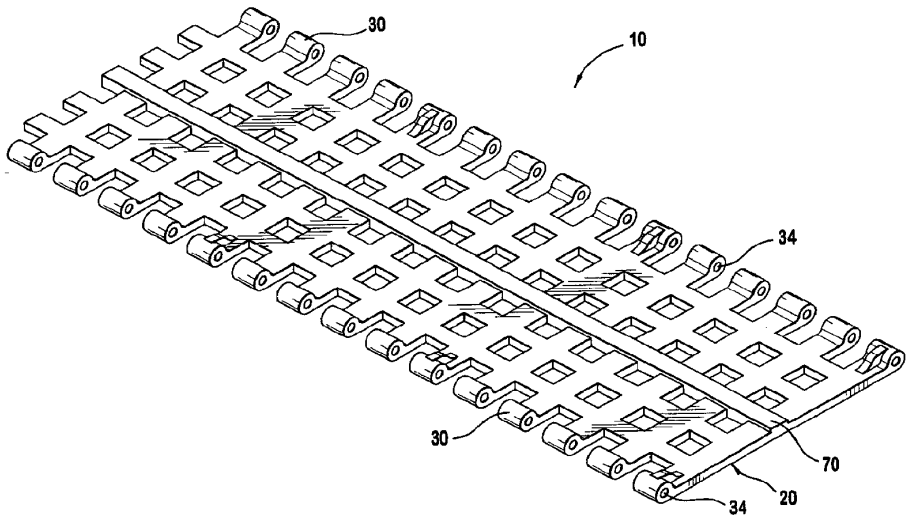

(57) Abstract: A link for making a modular papermaking fabric by interconnecting with other links is made through molding techniques to have predetermined characteristics such as open area, permeability, surface finish, etc. A papermaking fabric is constructed from a plurality of interconnected links and has predetermined permeability established by the combination of open and contact areas on each link.

WO 01/14634 A1

Dropbox Exhibit 1002 - Page 57
Dropbox, Inc. v. Entangled Media, LLC
IPR2024-00285 - U.S. Patent No. 8,484,260

MOLDED MODULAR LINK AND A FABRIC MADE FROM A PLURALITY THEREOF

BACKGROUND

The present invention relates to papermaking fabrics, especially dryer fabrics. More specifically it relates to fabrics made from interconnected modular subassemblies. Most specifically it relates to pre-molded subassembly links used to make a modular fabric.

A papermaking fabric is used in the form of an endless belt which is supported by and advanced through the papermaking machine by various machine rolls. The process and the various sections of the machine, forming, press and dryer, will be known to those skilled in the art.

Traditionally fabrics have been made either through endless or flat weaving techniques. More recently, spiral fabrics have been made by connecting spiral coils with pintles to create a fabric. The spiral fabrics have allowed for greater flexibility in making fabrics of various dimensions, unlike flat or endless woven fabrics whose dimensions must be known ahead of time and are limited by loom design. The spiral fabric, however, lacks adaptability with regard to desired changes in drainage, permeability and surface characteristics.

Papermaking fabrics, especially dryer fabrics, commonly comprise woven monofilament yarns. The monofilaments have traditionally been extruded from materials such as nylon, polyester, etc. Unfortunately, the extrusion process renders many plastics unsuitable for use in the harsh environment of the paper machine's dryer section.

Dropbox Exhibit 1002 - Page 58
Dropbox, Inc. v. Entangled Media, LLC
IPR2024-00285 - U.S. Patent No. 8,484,260

Therefore, the choice of materials suitable for use in forming the monofilament has been limited. Many more plastics would become available if a dryer fabric could be made with molding techniques. To date, few practical mechanisms exist for constructing fabrics from molded parts.

Present dryer fabrics form endless belts passing around rollers having diameters from 18 to 60 in. (45.7 to 152.4 cm). While flexibility is an important requirement, fabrics also must be strong enough to support the paper web along its path under a variety of conditions and temperatures. Suggested load capacities have been fifteen pounds per linear inch (PLI) (267.9 kg/m). The fabric must also withstand traveling at greater than 4,000 feet per minute (1219.2 m/min).

Damage and dirt accumulation are also major factors which typically limit the maximum useful life of the fabric to about one year. Fabric edges are particularly vulnerable because of a tendency of the yarns to unravel and shift. Once damaged, the entire fabric must be replaced. Although traditional woven fabrics have been limited in size by loom construction, they have still reached as much as thirty feet wide by three hundred feet long. Damage to even a small area of the fabric necessitates costly replacement of the entire fabric.

Even minor marring of the surface may deteriorate fabric quality because the paper contact surface characteristics greatly affect the final paper product. Traditional fabrics adjust these characteristics through choice of materials and the type of weave used. Often, a compromise between the best material or the best weave and final product quality must be made. Batting or other material has been affixed to the paper support

Dropbox Exhibit 1002 - Page 59
Dropbox, Inc. v. Entangled Media, LLC
IPR2024-00285 - U.S. Patent No. 8,484,260

surface to gain benefits not available from standard materials and weaves. A molded fabric offers greater flexibility in this regard, as surface characteristics may be incorporated directly into the mold and repeated consistently throughout the fabric.

The use of molded fabrics will benefit the art in many ways. A more direct process, avoiding additional storage and coiling requirements of monofilament yarns, as well as reducing trimming time and eliminating sealing will be enjoyed by using molded fabrics. More choices of less expensive material will become available, including lower molecular weight materials and gels having less stringent filtration requirements. The molding process also allows the use of composite materials to achieve more beneficial physical properties while maintaining cost effectiveness. A molded fabric allows greater flexibility and efficiency in design when creating fabric patterns (i.e., weave patterns and fabric dimensions). A fabric assembled from pre-molded subassemblies is strong, dimensionally stable, thermally stable, easy to join, distortion free, and has tough finished edges. Furthermore, use of a molded fabric limits fabric stretch, reduces costs, facilitates repair and generally benefits the papermakers art.

SUMMARY

The present invention is a pre-molded plastic subassembly for making papermaking fabrics. A plurality of the subassemblies are interconnected to create an endless fabric. The completed fabric also forms a part of the present invention.

Dropbox Exhibit 1002 - Page 60
Dropbox, Inc. v. Entangled Media, LLC
IPR2024-00285 - U.S. Patent No. 8,484,260

BRIEF DESCRIPTION OF THE DRAWINGS

Figure 1 is a bottom perspective view of a link of the present invention.

Figure 2 is a plan view of a link of the present invention.

Figure 3 is an end view of a link of the present invention as seen along line 3-3 of Figure 2.

Figure 4 is a plan view of a plurality of interconnected links of the present invention.

Figure 5 is a perspective view of an alternative link of the present invention.

Figure 6 is a perspective view of a pintle system for interconnecting the subassembly links of the present invention.

Figure 7 is a perspective view of a pin lock system for interconnecting the subassembly links of the present invention.

Figure 8 is a side elevational view of a D-link system for interconnecting the subassembly links of the present invention.

Figure 9 is a perspective view of a snap support system for interconnecting the subassembly links of the present invention.

Figure 10 is a perspective view of a finger lock system for interconnecting the subassembly links of the present invention.

Figure 11 is a perspective view of a grip linkage system for interconnecting the subassembly links of the present invention.

Figure 12 is a perspective view of a lock-fit system for interconnecting the subassembly links of the present invention.

Dropbox Exhibit 1002 - Page 61
Dropbox, Inc. v. Entangled Media, LLC
IPR2024-00285 - U.S. Patent No. 8,484,260

Figure 13 is a perspective view of a I-bar lock system for interconnecting the subassembly links of the present invention.

Figure 14 is a perspective view of a alternative link base with a sliding system for interconnecting the subassembly links of the present invention.

Figure 15 is a plan view of an alternative bi-component link of the present invention.

Figure 16 is a plan view of an alternative bi-component link of the present invention.

DETAILED DESCRIPTION OF THE PREFERRED EMBODIMENTS

Throughout the figures of the various embodiments of the present invention, like elements are identified with the same numerals.

The invention may be described generically as comprising a pliable, modular link 10, as shown in Figures 1-4. The link 10 is molded from appropriate plastics by molding techniques as are well known in the art. The link 10 has a planar upper support surface 20 for supporting and carrying the paper web and is molded to have a predetermined open area or permeability, based upon fabric needs and product demands. Finally, the link 10 is provided with means for interconnecting with other links to form an endless papermaking fabric. The completed fabric will be made of a plurality of interconnected links 10.

Materials and dimensions are chosen for a combination of reasons taking into account fabric demands and tooling concerns. Nylon 6/6 material, available from Dupont

Dropbox Exhibit 1002 - Page 62
Dropbox, Inc. v. Entangled Media, LLC
IPR2024-00285 - U.S. Patent No. 8,484,260

under the trademark Zytel®, is useful because of its desirable properties of strength, flexibility, impact resistance, heat performance and good mold processability. Other materials and specialized higher heat grades of resin may be used.

Along with choice of material, the actual link dimensions, interconnection means, and "weave pattern" must be determined according to fabric and tooling demands. The link dimensions have been found to be most limited by practical tooling and molding considerations rather than fabric considerations. Interconnection means, such as those illustrated in Figures 6-16, include a pintle system, integrated pin locks, D-link and finger locks, snap supports, grip linkages, and lock-fit mechanisms. The "weave pattern" must be chosen with fabric considerations in mind, but is limited only by mold construction and paper marking considerations. It may take a variety of patterns such as the gingham-type pattern shown in Figs. 1-4 or the alternative structures shown in Figs. 14-16. The latter figures show a flexible matt-like structure and adjustable X-weave patterns which slide atop each other for adjusting permeability in the finished fabric.

The link 10 described below was developed for use in a corrugated paper process. In the process, the completed fabric wraps around rollers having 18 inch (45.72cm) and 60 inch (152.4 cm) diameters. A maximum temperature of 300° F (148.9° C) is estimated at the fabric as it travels over steam cans having estimated temperatures up to 400° F (204.4° C). The temperature differential is due to a layer of pulp that separates the fabric from the steam cans. Typically, woven fabrics used in this process have a thickness of 0.140 inch (3.56 mm) and weigh approximately 5.9 oz./ft.^{2} (1.8kg/m^2). Normal running tension load on the fabric ranges from 8-15 PLI (142.9 - 267.9 kg/m),

Dropbox Exhibit 1002 - Page 63
Dropbox, Inc. v. Entangled Media, LLC
IPR2024-00285 - U.S. Patent No. 8,484,260

however, higher loads may be caused when a pulp wad passes through the rollers. Fabric thickness of the new modular fabric should approximate existing fabric thickness and, ideally, reduce weight. Since current seam strengths in woven fabrics presently range between 200-300 PLI (3572-5358 kg/m), 500 PLI (8930 kg/m) was the goal for the present example.

Keeping those requirements in mind, the link 10 was constructed generally as shown in Figures 1-4. As seen in Figure 1, link 10 was molded in a generally rectangular shape having a major axis and a minor axis. The major axis relates generally to the cross-machine direction in the papermaking machine while the minor axis relates to the machine direction. A pintle system similar to that shown in Figure 6 was chosen as the interconnection means due to its inherent strength. A plurality of individual pintle links 30 project from the two sides of the link 10 parallel to the major axis, each defining a bearing area 32 and pintle hole 34. Each pintle hole 34 is aligned with the next to form part of a pintle channel running parallel to the major axis along the length of each side. A pintle inserted through a completed pintle channel formed by interdigitating individual pintle links 30 of adjacent links 10 is used to interconnect a plurality of the links 10 to make a complete fabric. Each link 10 has an upper surface 20 which defines a planar support surface for contacting and carrying the paper web through the paper machine.

The link 10 was molded with a 6 inch (15.2 cm) major axis and a 2 inch (5.1 cm) minor axis. The three-to-one ratio of major axis to minor axis is believed to aid mold processability. Open area was established on the link 10 by a gingham-like pattern defining rectangular or squared openings. As shown in Figures 2 and 3, the link 10

Dropbox Exhibit 1002 - Page 64
Dropbox, Inc. v. Entangled Media, LLC
IPR2024-00285 - U.S. Patent No. 8,484,260

thickness t was established at 0.060 in. (1.5mm) with a 0.090 in. (2.3mm) runner 70 centrally located parallel to the major axis, to help flow during molding. A maximum thickness M of 0.143 in. (3.6mm) is found at each side parallel to the major axis due to the bearing thickness h, 0.040 in. (1.0mm), surrounding the pintle hole diameter d, 0.063 in. (1.6mm). A minimum pintle hole diameter was calculated based on an individual pintle link width w of 0.200 inch (5.1mm). A minimum 0.044 inch (1.1mm) diameter was calculated for a stainless steel pintle because a nylon pintle yielding the desired load capacity exceeded thickness requirements. The specific diameter, 0.063 in. (1.6mm), was chosen for tooling reasons; it is sized to receive a 0.0625 inch (1.59mm) diameter pintle.

The resultant weight was calculated from measured volume of the link, 0.56 $in.^3$ (9.18 cm^3), and known specific gravity of nylon 6/6 (1.14) to be 0.023 pounds (10.4 gm) per link. Each link has an area of 6 in. (15.2 cm) x 2 in. (5.1 cm) or 12 $in.^2$ (77.5 cm^2) resulting in a weight per area of 0.0019 pounds per square inch (1.34 kg/m^2), as compared to existing fabric weight of 0.0025 pounds per square inch (5.9 $oz./ft.^2$) (1.8 kg/m^2). Thus, the goal of maintaining fabric thickness while reducing weight was achieved.

A molded fabric establishes open area and permeability just as the weave of a traditional fabric, but without the concerns over shifting yarns and fabric stability. Although the link 10, shown in Figs. 1-4 has a gingham-like "weave pattern" with rectangular or squared openings, circular, oval, or other shaped openings and patterns may also be employed. Because of the molded nature, even three dimensional shapes may bc made in the links for desired results, such as permeability, flow control, etc. In

Dropbox Exhibit 1002 - Page 65
Dropbox, Inc. v. Entangled Media, LLC
IPR2024-00285 - U.S. Patent No. 8,484,260

fact, link 10 may be made using material only in the machine direction as seen in Figure 5. Fabric stability and paper marking must be considered when designing a link and a modular papermaking fabric just as in traditional fabric design.

In making a complete fabric, a plurality of the subassembly links 10 are interconnected to form an endless belt. Fabrics constructed from the modular links are not limited in dimension by loom size as in traditional fabrics. A fabric of any size can be made by interconnecting the appropriate number of subassembly links. Preferably, a brick layered pattern as shown in Figure 4 will be used to increase the fabric strength. In such an arrangement, each link 10 is staggered so that their individual pintle links 30 intermesh with the pintle links 30 of two other links 10. Accordingly, some sizing may be necessary at the fabric edges and final seam. This, however, can be accomplished at the edges through simple straight cuts. Alternatively, because of the modular design, special links may be molded to complete the edge without cutting. Similarly, smaller links can be molded to fill a variety of sizes that may be needed to complete the final fabric seam. Preferably, however, the overall fabric length needed will be considered when establishing link dimensions, so that special links of fractional dimensions will not be required to close the final seam.

Calendar finishing may be used on each link 10, much as in traditional fabrics. For the most uniform treatment, an assembled fabric will be subjected to the finishing treatment. For a more unique fabric, individual links can be given different surface finishes prior to assembly.

Dropbox Exhibit 1002 - Page 66
Dropbox, Inc. v. Entangled Media, LLC
IPR2024-00285 - U.S. Patent No. 8,484,260

The modular design of the fabric allows for easy replacement of individual sections of the fabric. When one section of the fabric becomes damaged, worn, or dirty, it may be replaced without having to remove and replace the entire fabric. This feature alone will result in a significant cost savings over traditional papermaking fabrics. Additionally, modular papermaking fabrics are strong, stable, versatile, light-weight, easy to install, and easy to repair or replace.

* * *

Dropbox Exhibit 1002 - Page 67
Dropbox, Inc. v. Entangled Media, LLC
IPR2024-00285 - U.S. Patent No. 8,484,260

What is claimed is:

1. A link for producing a fabric from the interconnection of a plurality of links, said link comprising:

a molded, pliable body defining a planar paper support surface having a predetermined amount of open area; and

means for interconnecting with another link.

2. A modular papermaking fabric comprising a plurality of interlinked molded links as recited in claim 1 wherein each of said plurality of links is connected to adjacent links to create an endless fabric of predetermined dimensions and having predetermined contact and open areas.

3. The fabric of claim 2 wherein the interlinked links are connected by a pintle engaging respective interconnecting means.

4. The fabric of claim 3 wherein the pintle is manufactured from stainless steel.

5. The fabric of claim 2 wherein each link body has a generally rectangular configuration with a major axis extending between first and second substantially parallel sides and a minor axis extending between third and fourth substantially parallel sides and the links are generally interconnected such that the third and fourth sides of each link do

Dropbox Exhibit 1002 - Page 68
Dropbox, Inc. v. Entangled Media, LLC
IPR2024-00285 - U.S. Patent No. 8,484,260

not align with the respective third and fourth sides of links adjacent their first or second side.

6. The fabric of claim 2 comprising a plurality of interconnected links defining a first layer and a plurality of interconnected links defining a second layer with the first and second layers interconnected to define a multi-layer fabric.

7. The link of claim 1 wherein the link body has a generally rectangular configuration with a major axis extending between first and second substantially parallel sides and a minor axis extending between third and fourth substantially parallel sides.

8. The link of claim 7 wherein the major and minor axes have a length ration of 3 to 1.

9. The link of claim 7 wherein the interconnecting means are provided along at least the first and second sides.

10. The link of claim 9 wherein a pintle receiving hole is defined along each of the first and second sides.

11. The link of claim 7 wherein the interconnecting means are provided along at least the third and fourth sides.

Dropbox Exhibit 1002 - Page 69
Dropbox, Inc. v. Entangled Media, LLC
IPR2024-00285 - U.S. Patent No. 8,484,260

12. The link of claim 11 wherein at least one pintle receiving hole is defined along each of the third and fourth sides.

13. The link of claim 11 wherein at least two spaced pintle receiving holes are defined along each of the third and fourth sides.

14. The link of claim 1 wherein the open area is defined by a plurality of apertures defined through the paper support surface.

15. The link of claim 14 wherein the apertures define a gingham-like pattern.

16. The link of claim 1 wherein the body is defined by an X-weave pattern.

17. The link of claim 1 wherein the interconnecting means is chosen from the group consisting of a pintle system, an integrated pin lock system, a D-link and finger lock system, snap supports, grip linkages, and lock-fit mechanisms.

Dropbox Exhibit 1002 - Page 70
Dropbox, Inc. v. Entangled Media, LLC
IPR2024-00285 - U.S. Patent No. 8,484,260

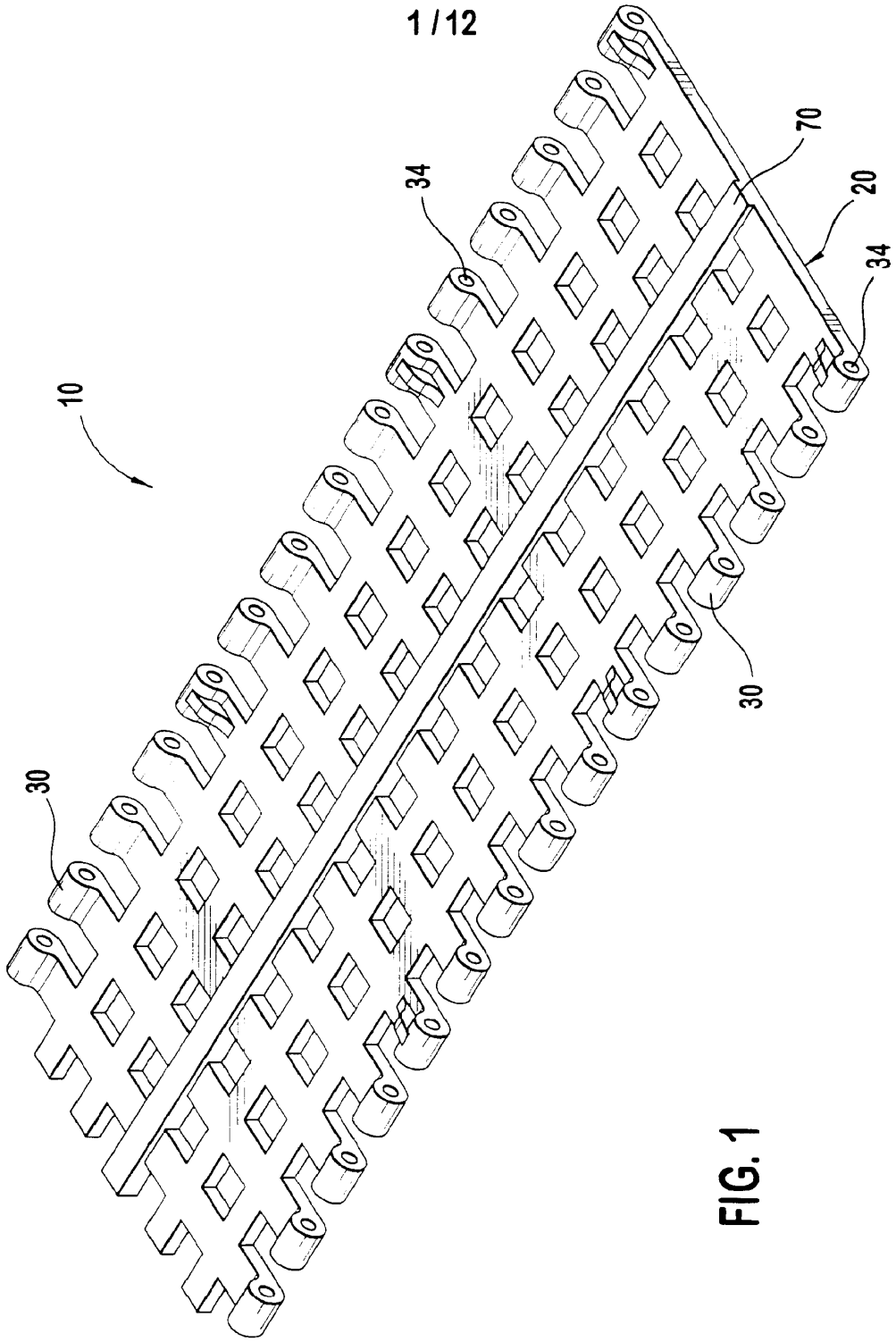

FIG. 1

Dropbox Exhibit 1002 - Page 71
Dropbox, Inc. v. Entangled Media, LLC
IPR2024-00285 - U.S. Patent No. 8,484,260

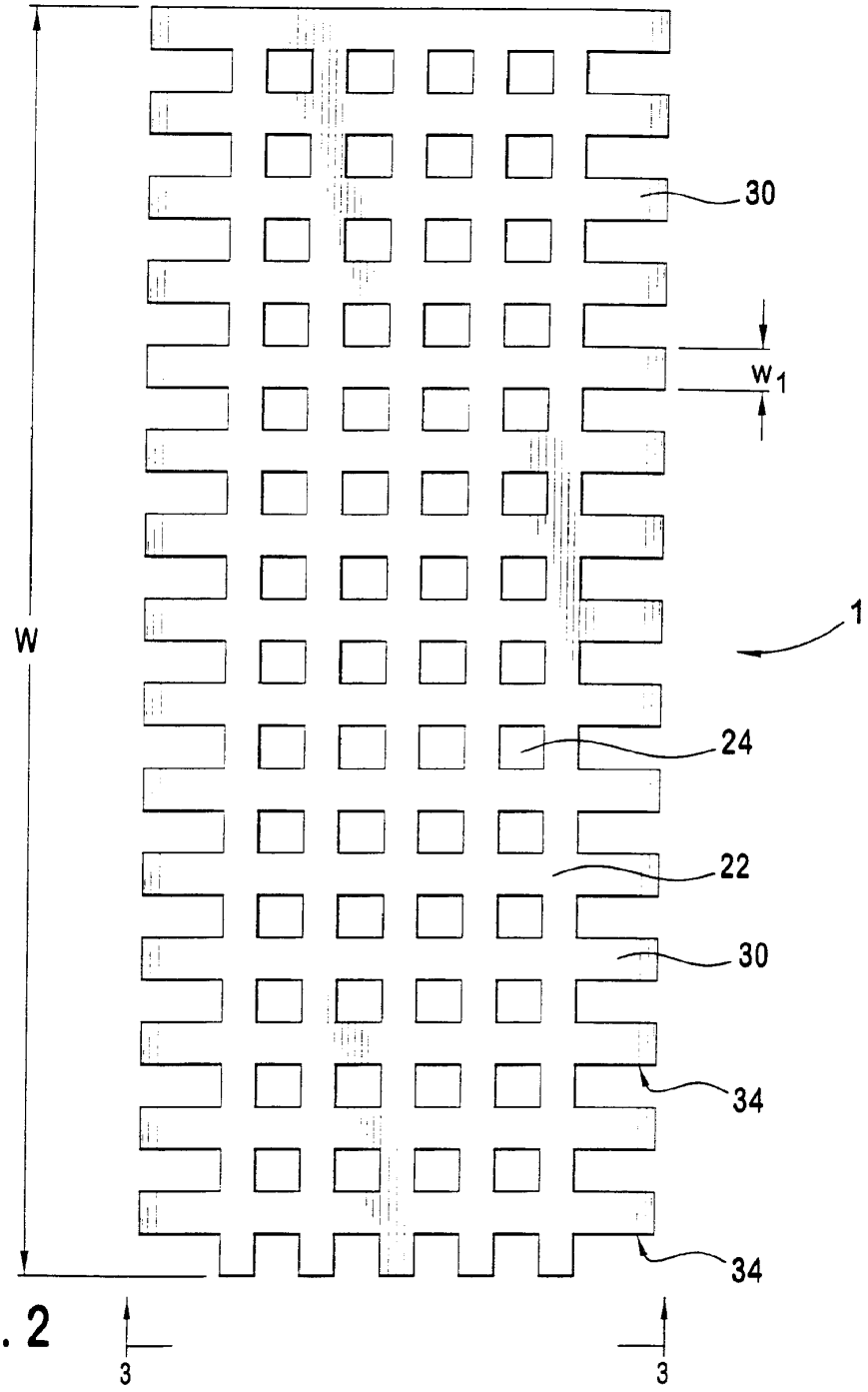

FIG. 2

Dropbox Exhibit 1002 - Page 72
Dropbox, Inc. v. Entangled Media, LLC
IPR2024-00285 - U.S. Patent No. 8,484,260

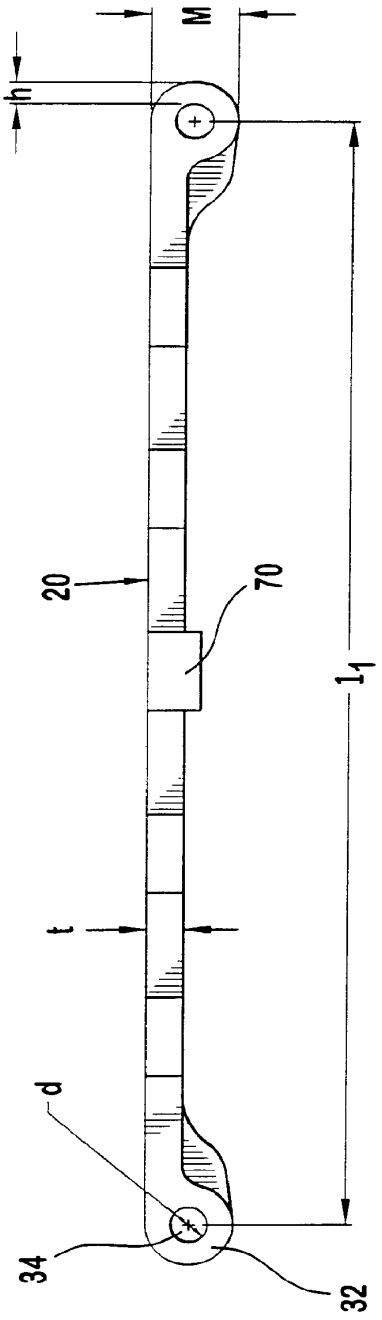

FIG. 3

Dropbox Exhibit 1002 - Page 73
Dropbox, Inc. v. Entangled Media, LLC
IPR2024-00285 - U.S. Patent No. 8,484,260

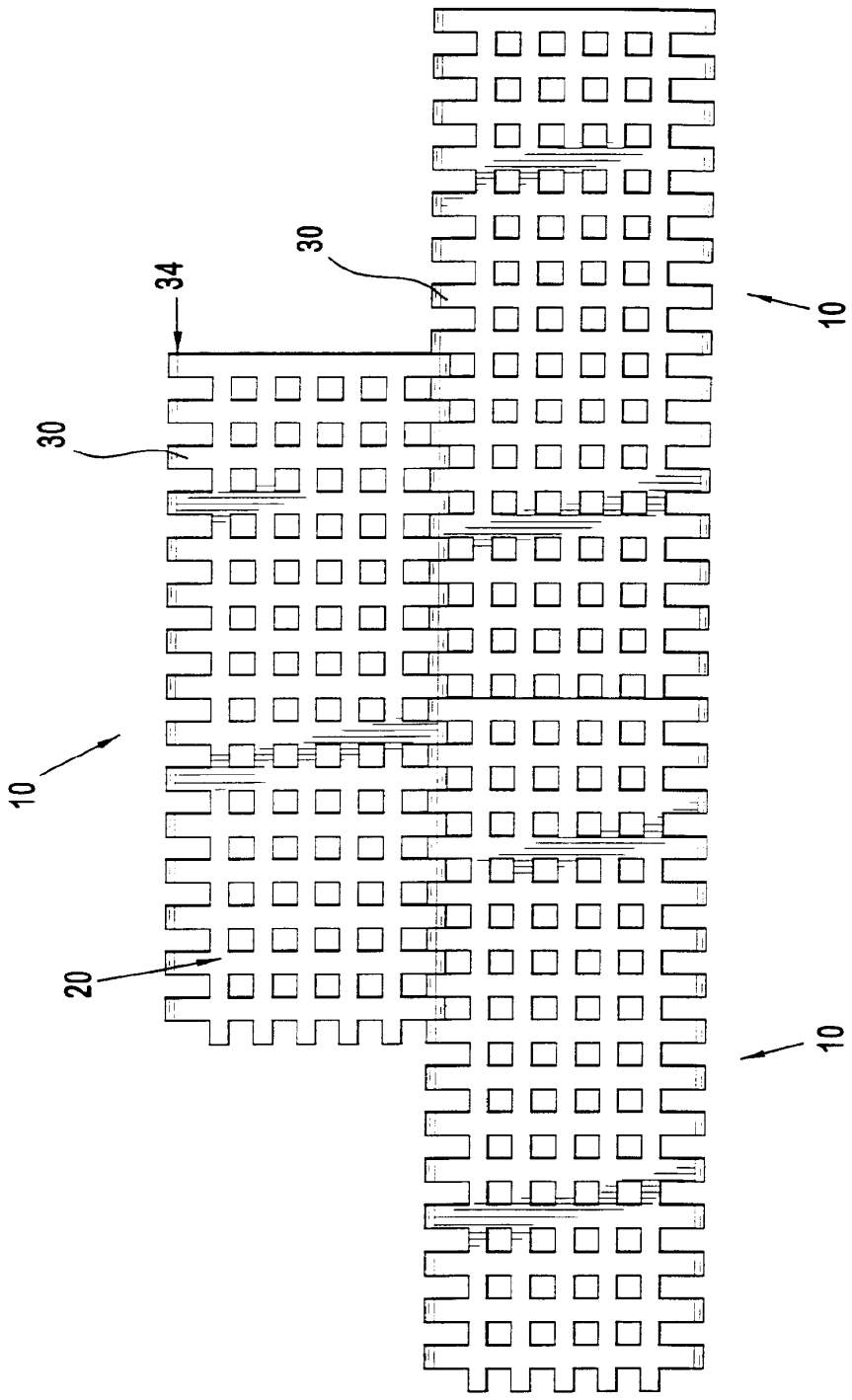

FIG. 4

Dropbox Exhibit 1002 - Page 74
Dropbox, Inc. v. Entangled Media, LLC
IPR2024-00285 - U.S. Patent No. 8,484,260

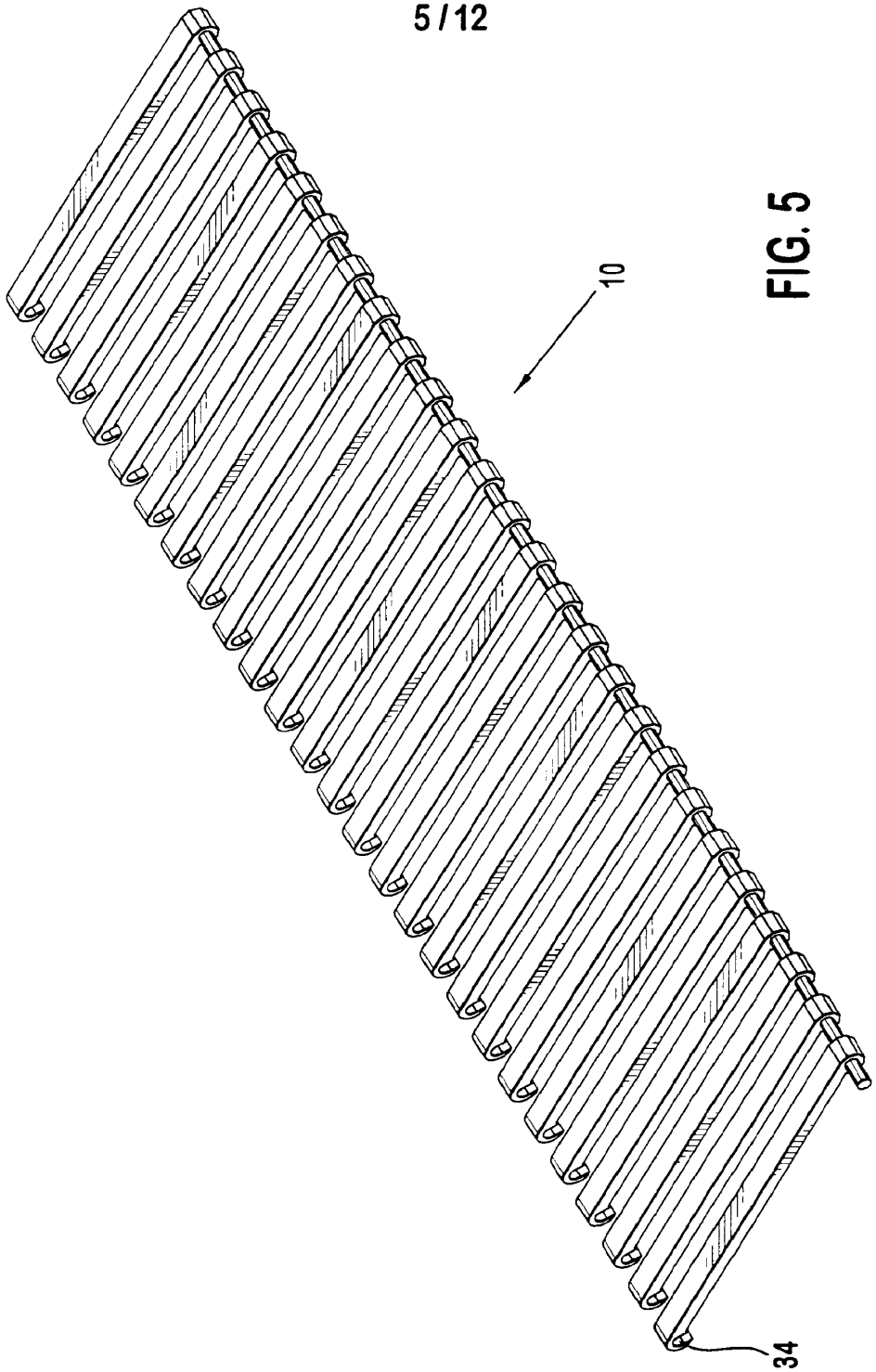

FIG. 5

Dropbox Exhibit 1002 - Page 75
Dropbox, Inc. v. Entangled Media, LLC
IPR2024-00285 - U.S. Patent No. 8,484,260

FIG. 6

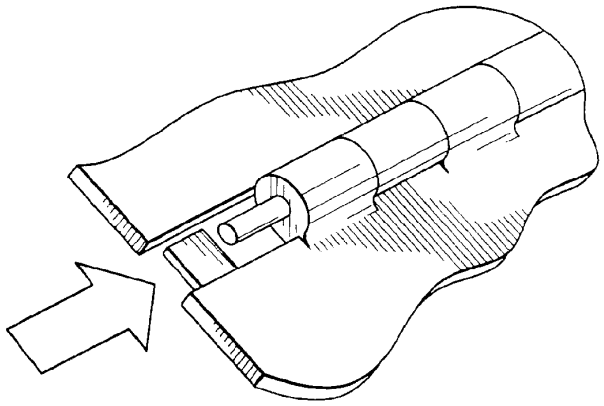

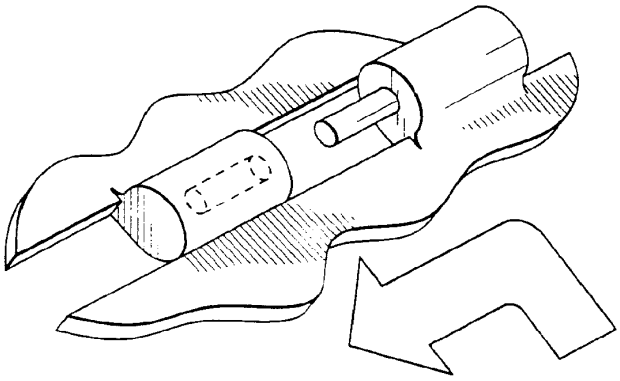

FIG. 7

FIG. 8

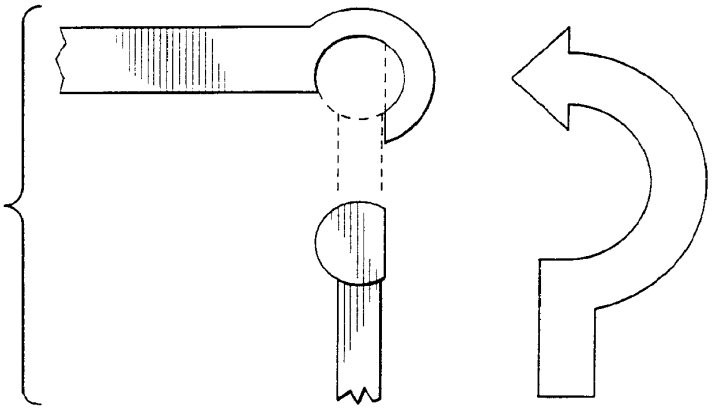

Dropbox Exhibit 1002 - Page 76
Dropbox, Inc. v. Entangled Media, LLC
IPR2024-00285 - U.S. Patent No. 8,484,260

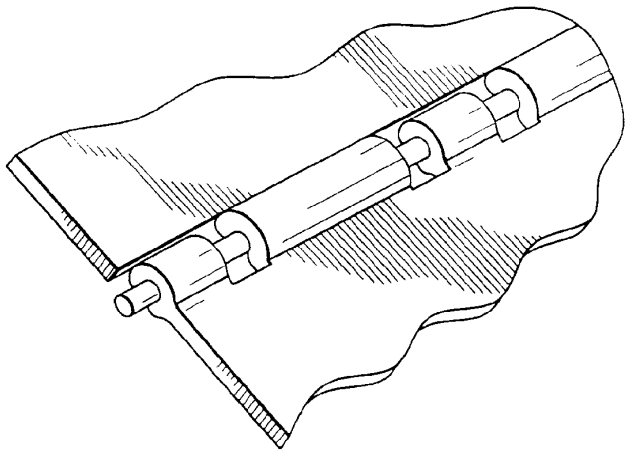

FIG. 9

Dropbox Exhibit 1002 - Page 77
Dropbox, Inc. v. Entangled Media, LLC
IPR2024-00285 - U.S. Patent No. 8,484,260

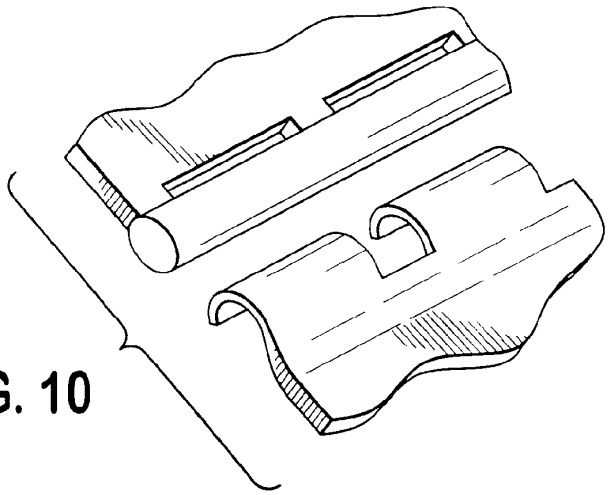

FIG. 10

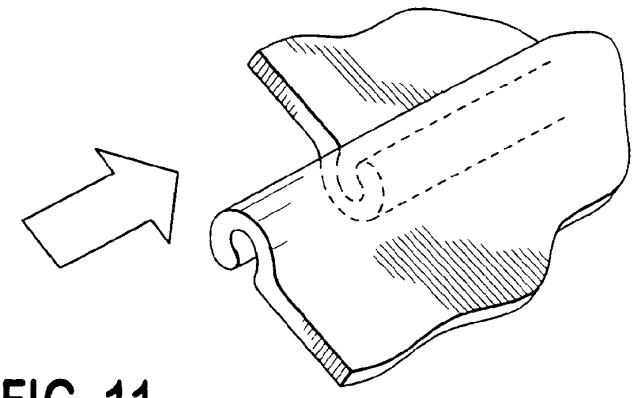

FIG. 11

Dropbox Exhibit 1002 - Page 78
Dropbox, Inc. v. Entangled Media, LLC
IPR2024-00285 - U.S. Patent No. 8,484,260

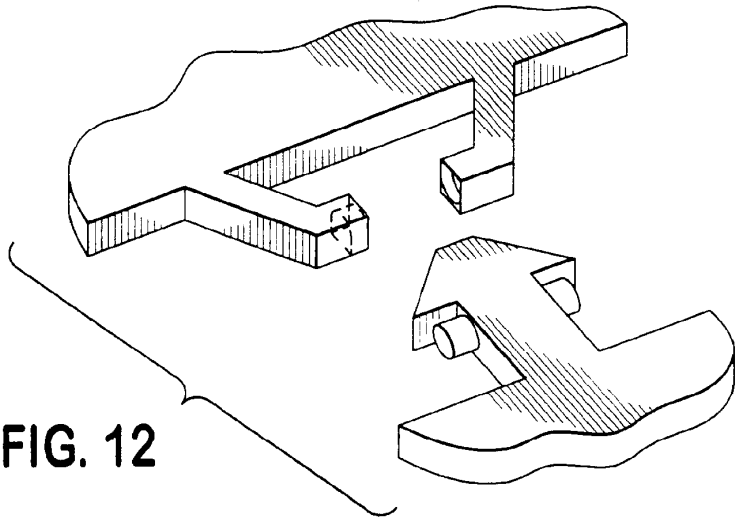

FIG. 12

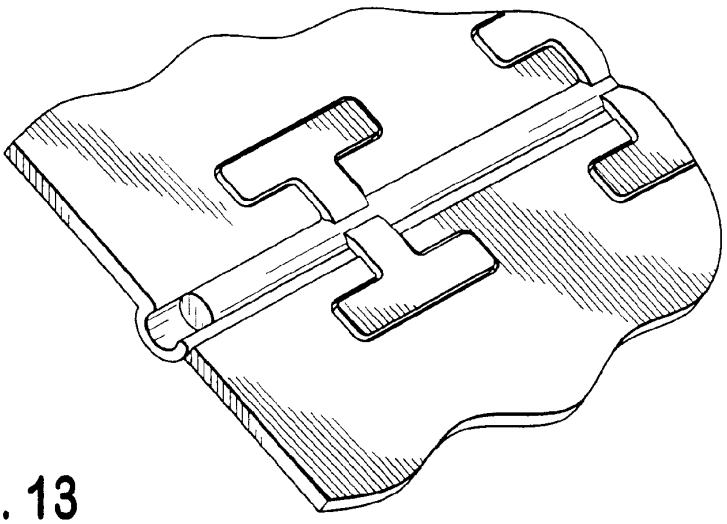

FIG. 13

Dropbox Exhibit 1002 - Page 79
Dropbox, Inc. v. Entangled Media, LLC
IPR2024-00285 - U.S. Patent No. 8,484,260

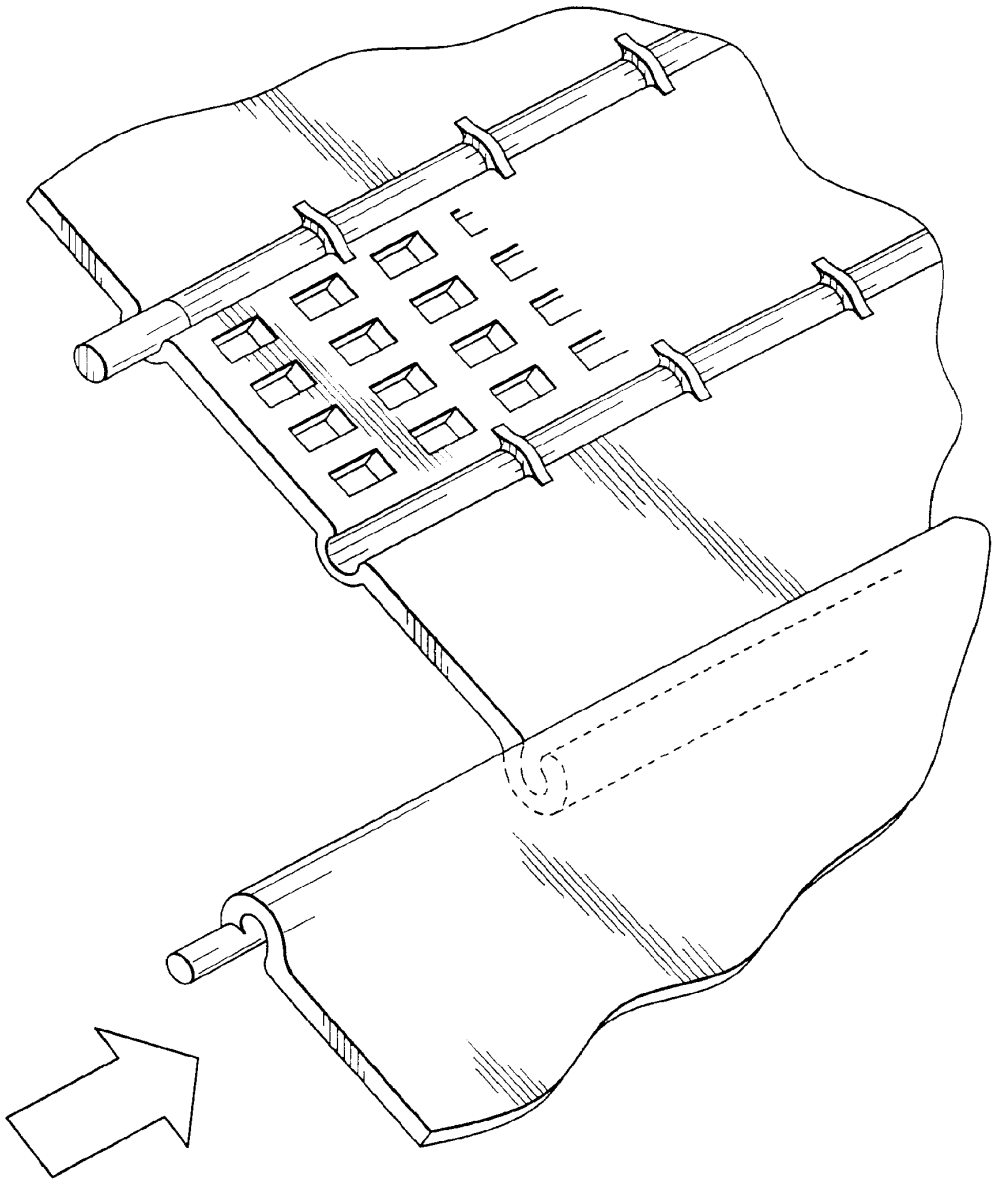

FIG. 14

Dropbox Exhibit 1002 - Page 80
Dropbox, Inc. v. Entangled Media, LLC
IPR2024-00285 - U.S. Patent No. 8,484,260

FIG. 15

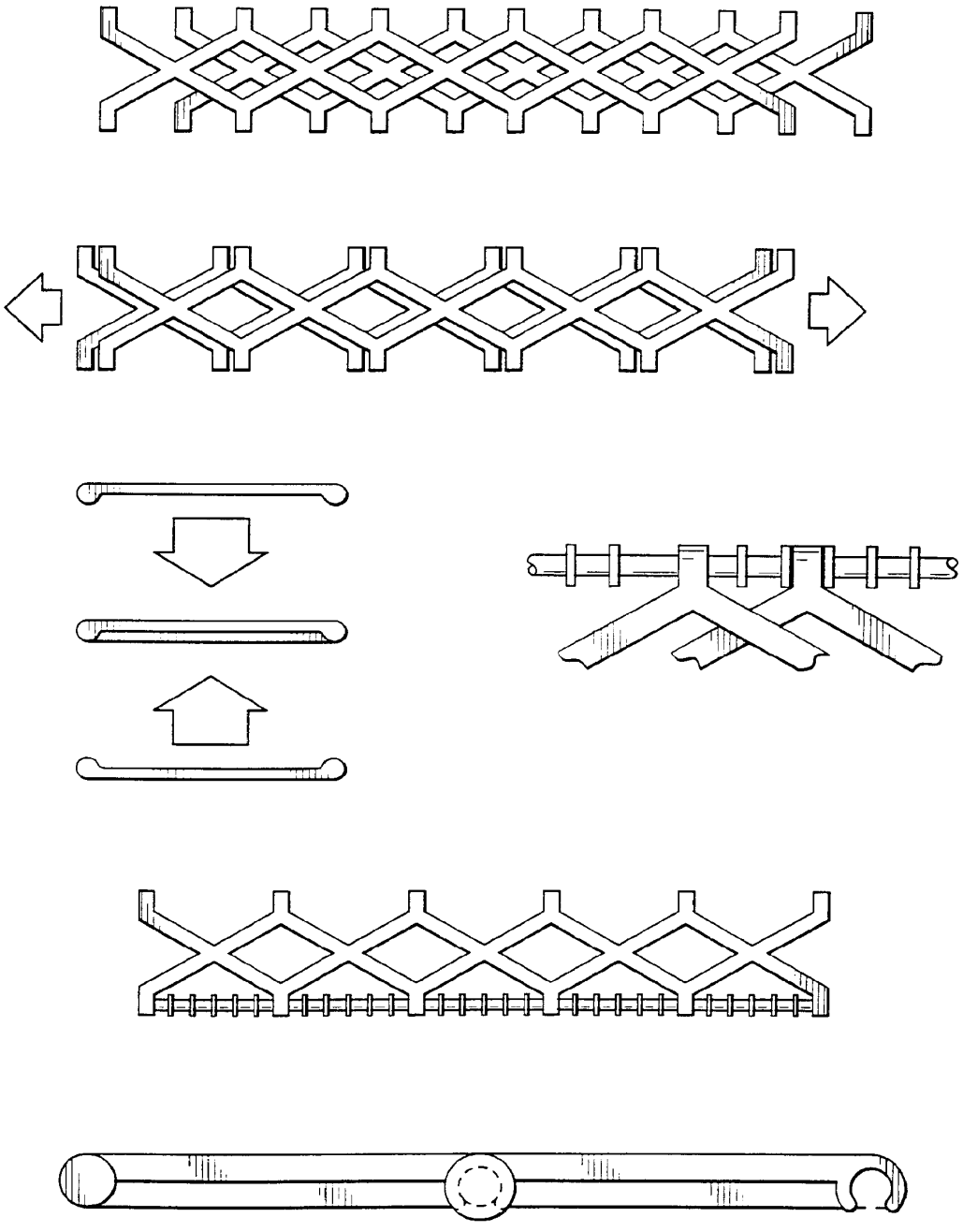

Dropbox Exhibit 1002 - Page 81
Dropbox, Inc. v. Entangled Media, LLC
IPR2024-00285 - U.S. Patent No. 8,484,260

FIG. 16

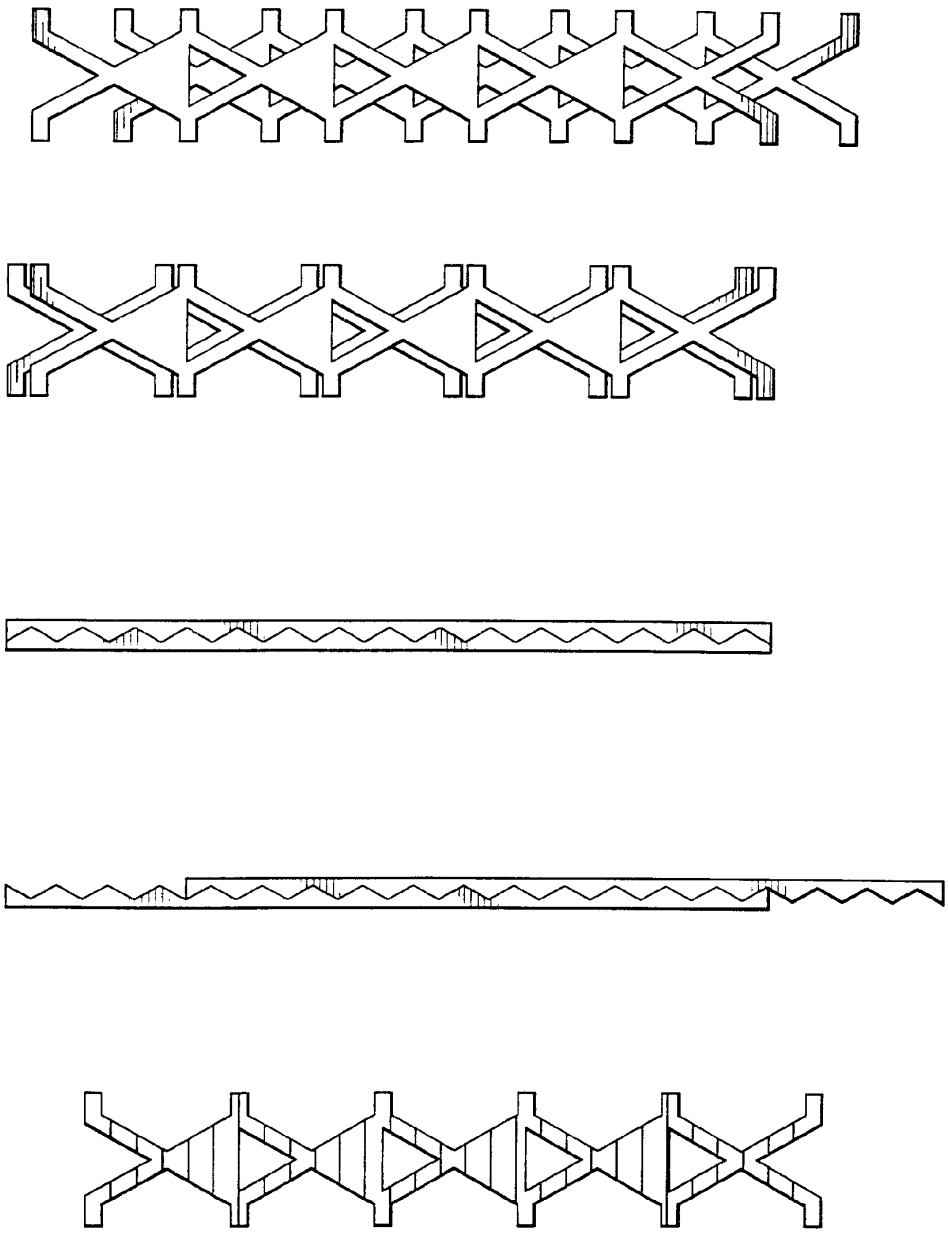

Dropbox Exhibit 1002 - Page 82
Dropbox, Inc. v. Entangled Media, LLC
IPR2024-00285 - U.S. Patent No. 8,484,260

INTERNATIONAL SEARCH REPORT

Inter nal Application No
PCT/US 00/22723

A. CLASSIFICATION OF SUBJECT MATTER
IPC 7 D21F1/00

According to International Patent Classification (IPC) or to both national classification and IPC

B. FIELDS SEARCHED

Minimum documentation searched (classification system followed by classification symbols)
IPC 7 D21F

Documentation searched other than minimum documentation to the extent that such documents are included in the fields searched

Electronic data base consulted during the international search (name of data base and, where practical, search terms used)
EPO-Internal, WPI Data, PAJ

C. DOCUMENTS CONSIDERED TO BE RELEVANT

Category °	Citation of document, with indication, where appropriate, of the relevant passages	Relevant to claim No.
X	DE 37 35 709 A (HEIMBACH GMBH THOMAS JOSEF) 3 May 1989 (1989-05-03) column 1, line 60 -column 2, line 5 column 5, line 24 -column 7, line 52; figures	1-4,7, 9-12,14, 17
X A	US 4 842 905 A (STECH WILLIAM J) 27 June 1989 (1989-06-27) the whole document	1-4,7, 9-12,14, 17 5,15,16
X	US 4 537 658 A (ALBERT HANS) 27 August 1985 (1985-08-27) abstract; figures column 3, line 52 -column 5, line 35	1-4,7, 9-12,14, 17

-/--

[X] Further documents are listed in the continuation of box C.

[X] Patent family members are listed in annex.

° Special categories of cited documents :

"A" document defining the general state of the art which is not considered to be of particular relevance

"E" earlier document but published on or after the international filing date

"L" document which may throw doubts on priority claim(s) or which is cited to establish the publication date of another citation or other special reason (as specified)

"O" document referring to an oral disclosure, use, exhibition or other means

"P" document published prior to the international filing date but later than the priority date claimed

"T" later document published after the international filing date or priority date and not in conflict with the application but cited to understand the principle or theory underlying the invention

"X" document of particular relevance; the claimed invention cannot be considered novel or cannot be considered to involve an inventive step when the document is taken alone

"Y" document of particular relevance; the claimed invention cannot be considered to involve an inventive step when the document is combined with one or more other such documents, such combination being obvious to a person skilled in the art.

"&" document member of the same patent family

Date of the actual completion of the international search	Date of mailing of the international search report
7 November 2000	16/11/2000

Name and mailing address of the ISA	Authorized officer
European Patent Office, P.B. 5818 Patentlaan 2 NL - 2280 HV Rijswijk Tel. (+31-70) 340-2040, Tx. 31 651 epo nl, Fax: (+31-70) 340-3016	Helpiö, T.

1

Form PCT/ISA/210 (second sheet) (July 1992)

Dropbox Exhibit 1002 - Page 83
Dropbox, Inc. v. Entangled Media, LLC
IPR2024-00285 - U.S. Patent No. 8,484,260

INTERNATIONAL SEARCH REPORT

Inte ional Application No
PCT/US 00/22723

C.(Continuation) DOCUMENTS CONSIDERED TO BE RELEVANT

Category *	Citation of document, with indication,where appropriate, of the relevant passages	Relevant to claim No.
A	EP 0 802 280 A (JWI LTD) 22 October 1997 (1997-10-22) abstract; figures	6

1

Form PCT/ISA/210 (continuation of second sheet) (July 1992)

Dropbox Exhibit 1002 - Page 84
Dropbox, Inc. v. Entangled Media, LLC
IPR2024-00285 - U.S. Patent No. 8,484,260

INTERNATIONAL SEARCH REPORT

Information on patent family members

Inter nal Application No
PCT/US 00/22723

Patent document cited in search report	Publication date	Patent family member(s)	Publication date
DE 3735709 A	03-05-1989	NONE	
US 4842905 A	27-06-1989	CA 1317142 A	04-05-1993
US 4537658 A	27-08-1985	CA 1240188 A	09-08-1988
EP 0802280 A	22-10-1997	AU 1789397 A	23-10-1997
		BR 9701853 A	15-12-1998
		CA 2202817 A	18-10-1997
		US 6124015 A	26-09-2000

Form PCT/ISA/210 (patent family annex) (July 1992)

(12) INTERNATIONAL APPLICATION PUBLISHED UNDER THE PATENT COOPERATION TREATY (PCT)

(19) World Intellectual Property Organization
International Bureau

(43) International Publication Date
10 January 2002 (10.01.2002)

PCT

(10) International Publication Number
WO 02/03046 A2

(51) International Patent Classification[7]: G01N

(21) International Application Number: PCT/US01/20253

(22) International Filing Date: 26 June 2001 (26.06.2001)

(25) Filing Language: English

(26) Publication Language: English

(30) Priority Data:
09/608,865 30 June 2000 (30.06.2000) US

(71) Applicant: **BROWN UNIVERSITY RESEARCH FOUNDATION** [US/US]; 42 Charlesfield Street, Providence, RI 02912 (US).

(72) Inventor: **MARIS, Humphrey, J.**; 9 Echo Drive, Barrington, RI 02806 (US).

(74) Agent: **SMITH, Harry, F.**; Ohlandt, Greeley, Ruggiero & Perle, LLP, One Landmark Square, 10th Floor, Stamford, CT 06901-2682 (US).

(81) Designated States *(national)*: CA, JP.

(84) Designated States *(regional)*: European patent (AT, BE, CH, CY, DE, DK, ES, FI, FR, GB, GR, IE, IT, LU, MC, NL, PT, SE, TR).

Published:
— *without international search report and to be republished upon receipt of that report*

For two-letter codes and other abbreviations, refer to the "Guidance Notes on Codes and Abbreviations" appearing at the beginning of each regular issue of the PCT Gazette.

(54) Title: ULTRASONIC GENERATOR AND DETECTOR USING AN OPTICAL MASK HAVING A GRATING FOR LAUNCHING A PLURALITY OF SPATIALLY DISTRIBUTED, TIME VARYING STRAIN PULSES IN A SAMPLE

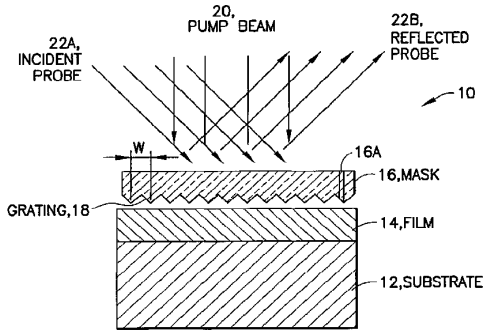

(57) Abstract: A method and a system are disclosed for determining at least one characteristic of a sample that contains a substrate and at least one film disposed on or over a surface of the substrate. The method includes a first step of placing a mask over a free surface of the at least one film, where the mask has a top surface and a bottom surface that is place adjacent to the free surface of the film. The bottom surface of the mask has formed therein or thereon a plurality of features for forming at least one grating. A next step directs optical pump pulses through the mask to the free surface of the film, where individual ones of the pump pulses are followed by at least one optical probe pulse. The pump pulses are spatially distributed by the grating for launching a plurality of spatially distributed, time varying strain pulses within the film, which cause a detectable change in optical constants of the film. A next step detects a reflected or a transmitted portion of the probe pulses, which are also spatially distributed by the grating. A next step measures a change in at least one characteristic of a least one of reflected or transmitted probe pulse due to the change in optical constants, and a further step determines the at least one characteristic of the sample from the measured change in the at least one characteristic of the probe pulses. An optical mask is also disclosed herein, and forms a part of these teachings.

WO 02/03046 A2

Dropbox Exhibit 1002 - Page 86
Dropbox, Inc. v. Entangled Media, LLC
IPR2024-00285 - U.S. Patent No. 8,484,260

ULTRASONIC GENERATOR AND DETECTOR USING AN OPTICAL MASK HAVING A GRATING FOR LAUNCHING A PLURALITY OF SPATIALLY DISTRIBUTED, TIME VARYING STRAIN PULSES IN A SAMPLE

FIELD OF THE INVENTION:

This invention relates generally to non-destructive material analysis and characterization systems and methods and, more particularly, relates to optically based materials analysis and characterization systems that employ light pulses of picosecond and sub-picosecond duration to generate a localized stress in a sample that results in propagating strain waves, and that detect changes in optical constants of the sample material due to the propagating strain waves.

BACKGROUND OF THE INVENTION:

A number of U.S. Patents exist in the general area of picosecond ultrasonics. In most of these U.S. Patents a pump light pulse is directed at the surface of a sample. The pump light pulse raises the temperature of a layer near the surface of the sample and sets up a stress in this region. A time-varying strain is then generated in the sample. The strain is detected by means of a probe light pulse applied to the sample at a later time. Hereinafter this approach will be referred to as the "standard method". From the arrival time, amplitude, and shape of the detected signals, a data processor is enabled to determine a number of characteristics of the sample. These characteristics include, but are not limited to, the film thickness, the adhesion between a film and the substrate, the adhesion between one film and another film, the orientation of crystalline grains making up a film, the size of grains, the crystal phase of a film, the electrical resistivity of a film, the rate of electromigration within a film, and the yield stress of a film.

In some of these U.S. Patents measurements can be made by means of a second method, referred to herein for convenience as a "grating method". In this approach, the pump light is divided into two beams that are directed onto the sample surface at oblique angles. Because of the constructive and destructive interference between the two beams, the intensity of the pump light varies periodically across the sample surface. Thus, the temperature rise of the sample surface and the induced stress will also vary periodically across the sample surface. This stress launches a strain disturbance into the sample that varies periodically across the sample surface. This strain field causes the optical constants of the sample, and the displacement of the sample surface, to vary across the sample

Dropbox Exhibit 1002 - Page 87
Dropbox, Inc. v. Entangled Media, LLC
IPR2024-00285 - U.S. Patent No. 8,484,260

surface and, as a consequence, when a probe pulse is incident onto the surface a fraction of the probe pulse will be diffracted, rather than undergoing specular reflection. Thus, the strain field acts as a diffraction grating. By a measurement of the intensity of the diffracted probe light as a function of the time after the application of the pump light pulse, the propagation of strain in the sample can be investigated, and physical properties of the sample determined. The grating method can also be used to determine the various sample properties that were listed above.

These two methods each have some limitations. For example, in the standard method, in order to determine the thickness of a film the sound velocity in the film must be known. This value can be taken from measurements made on a bulk sample of the same material composition as the film. In some cases, it is also possible to estimate the sound velocity from a measurement of the reflection coefficient of the strain pulse at the interface between one film and another. This measurement enables a comparison of the acoustic impedances of the two films to be made.

The grating method also exhibits a number of limitations. For example, it is necessary to build the apparatus in a way that ensures that the phase relation between the two pump beams remains constant. In addition, the diffracted component of the probe light may have a low intensity and thus may be difficult to measure accurately in the presence of light diffusely scattered from the surface of the sample.

Based on the foregoing, it can be appreciated that a need exists to provide an improved approach to ultrasonic sample characterization that overcomes the foregoing and other problems.

OBJECTS AND ADVANTAGES:

It is a first object and advantage of these teachings to provide an improved sample characterization system and method that overcomes the foregoing an other problems.

It is another object and advantage of these teachings to provide an improved sample characterization system and method that employs an optical mask.

SUMMARY OF THE INVENTION

The foregoing and other problems are overcome and the objects of the invention are realized by methods and apparatus in accordance with embodiments of this invention.

An improved method and apparatus in accordance with these teachings generates and detects strain pulses in a sample, while retaining many of the advantages of the standard method, while at the same time making it possible to determine the sound velocity in the sample. A transparent plate, referred to herein for convenience as a mask, is placed over the sample. The bottom of the plate has a periodic grating etched into its surface. A pump light pulse is directed through the transparent mask onto the sample. The periodic grating of the mask distorts the wavefront of the light pulse and, as a result, the intensity of the light incident onto the film varies periodically with position across the sample surface. This results in a heating of the film surface that varies periodically with position. The regions of the film that are heated expand and, as a result, spatially distributed strain pulses (disturbances) are launched into the sample. The strain pulses result in a change in the optical constants of the sample, and this change is detected by means of a time-delayed probe pulse also directed onto the sample through the transparent mask. As in the standard method and the grating method, the improved method in accordance with the teachings herein can be used to determine various characteristics of the sample. These characteristics include, but need not be limited to, the film thickness, the adhesion between a film and the substrate, the adhesion between one film and another film, the orientation of crystalline grains making up a film, the size of grains, the crystal phase of a film, the electrical resistivity of a film, the rate of electromigration within a film, and the yield stress of a film.

In one preferred embodiment, the pump and probe beams are directed through the mask at normal incidence. The probe is delayed relative to the pump by means of a variable optical path provided by a movable stage. The change in the intensity of the reflected probe beam is measured as a function of the time delay between the application of the pump and probe pulses. To improve the signal to noise ratio the intensity of the pulses composing the pump beam is modulated at frequency **f** by means of an acousto-optic modulator. The output of the detector of the reflected probe beam is fed into a lock-in amplifier for which the reference signal is at the same frequency **f**. The measured change $\Delta R(t)$ in reflectivity of the sample is compared with the results of a simulated reflectivity change $\Delta R_{sim}(t)$. The change $\Delta R_{sim}(t)$ can be determined as follows: A) An initial estimate is made for the parameters of the sample. These parameters include, but are not

necessarily limited to, the thickness, density, sound velocity, thermal expansion, specific heat, and optical constants of the different films, the adhesion between the films, the orientation of crystalline grains making up a film, the size of grains, the crystal phase and electrical resistivity of each film. B) Based on these assumed values, the stress in the structure that is induced by the pump light pulse is calculated. C) The time-dependent strain in the sample is then calculated. D) From this strain, the expected change in reflectivity $\Delta R_{sim}(t)$ is found. E) This change is compared with the measured reflectivity $\Delta R(t)$. The parameters of the sample are then adjusted and the procedure repeated in order to achieve the best possible agreement between $\Delta R(t)$ and $\Delta R_{sim}(t)$.

A method and a system are thus disclosed for determining at least one characteristic of a sample containing a substrate and at least one film disposed on or over a surface of the substrate. The method includes a first step of placing a mask over a free surface of the at least one film, where the mask has a top surface and a bottom surface that is placed adjacent to the free surface of the film. The bottom surface of the mask has formed therein or thereon a plurality of features for forming at least one grating. A next step directs optical pump pulses through the mask to the free surface of the film, where individual ones of the pump pulses are followed by at least one optical probe pulse.

In accordance with an aspect of these teachings the pump pulses are spatially distributed by the grating for launching a plurality of spatially distributed, time varying strain pulses within the film. The strain pulses cause a detectable change in optical constants of the film.

A next step detects a reflected or a transmitted portion of the probe pulses, which are also spatially distributed by the grating.

A next step of the method measures a change in at least one characteristic of at least one of reflected or transmitted probe pulses due to the change in optical constants, and a further step determines the at least one characteristic of the sample from the measured change in the at least one characteristic of the probe pulses.

In addition to changes in reflectivity arising from the strain pulses that are launched in the sample, there may be components that arise from a spatial variation in temperature, and/or from a spatial variation in a density of electrons and holes in the sample.

For example, the sample may include at least one region that is implanted during an ion implant process and, using the spatially varying density of electrons and holes in the film,

a determined characteristic of the sample can be related to at least one of (A) a number of ions implanted per unit area of the surface of the sample; (B) a kinetic energy of the ions that are directed at the surface of the sample; (C) a direction at which the ion beam is incident onto the surface of the sample; (D) an ion current per unit area during the ion implant process; (E) the species of the implanted ion; (F) the charge on the implanted ion; (G) a duration of time that the ion-implanted sample is annealed; and (H) a temperature at which the ion-implanted sample is annealed.

An optical mask is also disclosed herein, and forms a part of these teachings.

Also disclosed is a method for determining the electrical resistivity of a film that comprises part of a sample having an underlying substrate. The method includes steps of: (A) placing a mask over a free surface of the film, the mask having a top surface and a bottom surface that is placed adjacent to the free surface of the film, the bottom surface of the mask comprising a plurality of features having a known feature repeat distance w; (B) directing optical pump pulses through the mask to the free surface of the film, individual ones of the pump pulses being followed by at least one optical probe pulse, said pump pulses being spatially distributed by said at least one grating for generating a spatially distributed temperature variation within the film that causes a change in optical constants of the film; (C) detecting a reflected or transmitted portion of said probe pulses, said probe pulses also being spatially distributed by said at least one grating; (D) measuring $\Delta R(t)$ as a function of the time t after the application of the pump pulses using the mask of known repeat distance w; (E) assuming values for the thermal conductivity κ_{film} of the film, the thermal conductivity κ_{sub} of the substrate, and the Kapitza conductance σ_K between the film and the substrate; (F) calculating an initial temperature distribution within the film; (G) calculating the temperature distribution within the film at later times based on the assumed values for the thermal conductivity of the film, the thermal conductivity of the substrate, and the Kapitza conductance between the film and the substrate; (H) calculating an expected change in reflectivity $\Delta R(t)$ based on the calculated temperature distribution; (I) adjusting the parameters κ_{film}, κ_{sub}, and σ_K, and repeating Steps (F)-(H) so as to obtain a best fit to the measured $\Delta R(t)$; and calculating the electrical resistivity from the thermal conductivity.

Dropbox Exhibit 1002 - Page 91
Dropbox, Inc. v. Entangled Media, LLC
IPR2024-00285 - U.S. Patent No. 8,484,260

BRIEF DESCRIPTION OF THE DRAWINGS

The above set forth and other features of the invention are made more apparent in the ensuing Detailed Description of the Invention when read in conjunction with the attached Drawings, wherein:

Fig. 1 is an enlarged, cross-sectional view, not to scale, of a sample having a substrate, at least one film, and a mask disposed over a surface thereof in accordance with these teachings;

Fig. 2 is a simplified block diagram of a material characterization system in accordance with these teachings;

Fig. 3 is a logic flow diagram of a method for operating the data processor shown in Fig. 2 for generating a simulation of a change in sample reflectivity, and for comparing the simulation to a measured change in sample reflectivity;

Fig. 4 is an enlarged, cross-sectional view, not to scale, of a sample having a substrate, at least one film, and a mask disposed over a surface thereof in accordance with a further embodiment of these teachings, wherein the grating region of the mask is at a different height than all or a portion of the surrounding area of the lower surface of the mask;

Fig. 5 is a logic flow diagram of a method for the determination of the electrical resistivity of a metal film using the optical mask in accordance with the teachings herein; and

Fig. 6 depicts in an enlarged cross-sectional view a sample having laterally patterned features.

DETAILED DESCRIPTION OF THE INVENTION

Referring first to Fig. 1, a sample 10 includes a substrate 12, such as semiconductor material (e.g., silicon, a Group III-V material, or a Group II-VI material) having at least one film 14, such as a metal film or semiconductor or a dielectric film, disposed on or over a top surface thereof. A transparent plate, referred to herein as a mask 16, is placed on top of the sample 10. The mask 16 has a periodic grating 18 formed on or within a lower surface thereof. A pump light pulse 20 from a pump light source 30 (Fig. 2) is

directed through the mask 16 onto the sample 10, specifically onto the free (upper) surface of the film 14. The mask 16 distorts the wavefront of the pump light pulse and, as a result, the intensity of the light incident onto the free surface of the film 14 varies periodically with position across the sample's surface. This causes a heating of the surface of the film 14 that varies in a spatially periodic manner as a function of position. The regions of the film 14 that are heated expand. As a result, strain pulses are launched into the sample 10 from each of the expanding regions. These strain disturbances result in a change in the optical constants of the sample 10, and this change is detected by means of a time-delayed probe pulse 22A that is also directed onto the sample 10 through the mask 16, specifically by detecting (in this embodiment) a reflected portion 22B of the probe pulse. The probe pulse 22A originates from a probe source 32, which could be the pump source 30 as well. Preferably, the pump and probe pulses are laser pulses of picosecond or sub-picosecond duration, and originate from one laser or from two lasers. As in the standard method and the grating method, one or more characteristics of the sample 10 may be determined, such as those listed above.

In one preferred embodiment, and referring as well to Fig. 2, the pump and probe beams 20, 22A are directed through the mask 16 at normal incidence. The probe beam 22A is delayed relative to the pump beam 20, preferably by means of a variable optical path 34 provided by a movable stage or by some other technique. The sample 10 is assumed to be supported by some suitable type of fixed or movable sample stage 36. The change in the intensity of the reflected probe beam 22B is sensed by a detector 38 and measured as a function of a time delay **t** between the application of the pump and probe pulses 20, 22A. To improve the signal to noise ratio the intensity of the pulses composing the pump beam 20 can be modulated at some frequency **f** by means of an acousto-optic modulator (AOM) 30A. The output of the detector 38, which is an electrical signal indicative of the intensity of the reflected probe beam 22B, is fed into a lock-in amplifier 40 for which the reference signal is at the same frequency **f** as the modulation frequency of the AOM 30A. A data processor 42 has an input coupled to an output of the lock-in amplifier 40, and is further coupled to a memory 44, such as a hard disk, RAM, ROM, etc., wherein is stored an operating program, simulation results and other required data, constants and the like. The measured change $\Delta R(t)$ in reflectivity is compared by the data processor 42 with the results of a simulated reflectivity change $\Delta R_{sim}(t)$ stored in the memory 44.

The change $\Delta R_{sim}(t)$ is preferably determined in accordance with the following method. Reference can also be made to the logic flow diagram of Fig. 3.

Dropbox Exhibit 1002 - Page 93
Dropbox, Inc. v. Entangled Media, LLC
IPR2024-00285 - U.S. Patent No. 8,484,260

At Step A an initial estimate is made for the parameters of the sample 10. These parameters include, but are not necessarily limited to, the thickness, density, sound velocity, thermal expansion, specific heat, optical constants of the different films, the adhesion between the films, the orientation of crystalline grains making up a film, the size of grains, the crystal phase and electrical resistivity of each film.

Based on the assumed values, at Step B the stress in the sample 10 that is induced by the pump light pulse 20 is calculated.

At Step C, the time-dependent strain in the sample 10 is calculated.

From the calculated strain, at Step D the expected change in reflectivity $\Delta R_{sim}(t)$ is found.

At Step E, the expected change in reflectivity $\Delta R_{sim}(t)$ is compared with the measured change in reflectivity $\Delta R(t)$.

At Step F, the parameters of the sample are adjusted and the procedure iterated one or more times in order to achieve the best possible agreement between $\Delta R(t)$ and $\Delta R_{sim}(t)$.

For certain samples, it may be possible to simplify the procedure just described. Consider first a sample 10 that includes a single film 14 deposited onto the substrate 12 (as in Fig. 1), where the thickness **d** of the film 14 is significantly greater than the spacing **w** of the grating lines 18 on the mask 16. For a time **t** less than the time required for a strain pulse to propagate through the thickness of the film 14 to the substrate 12 and return to the top surface of the film 14, the reflectivity change $\Delta R(t)$ is unaffected by the existence of the substrate 12, i.e., the response $\Delta R(t)$ is the same as would be obtained on a bulk material of the same composition and material properties as the film 14. The stress set up by the pump pulse 20 excites a Rayleigh surface wave that is confined to the region near to the upper surface of the film 14. This wave may be considered to be a standing wave of wavelength $\lambda = w$. The frequency of this standing wave is given by $f_R = c_R/w$, where c_R is the Rayleigh wave velocity. The presence of this standing wave causes a periodic modulation of the elastic strain in the surface layer of the film 14, which in turn causes a contribution to $\Delta R(t)$ that varies in time with the frequency f_R. An analysis of the measured $\Delta R(t)$ can be used to obtain the frequency f_R, and from this frequency, and from the known value of **w**, the Raleigh wave velocity of the material of the film 14 can be found. This velocity can be expressed in terms of the elastic constants of the film

material using a well-known formula.

One reference for the velocity of a Rayleigh surface wave is L.D. Landau and E.M. Lifshitz, "Theory of Elasticity", second edition, Pergamon Press, 1970, section 24. The theory of Rayleigh velocity in elastically anisotropic crystals is complicated but, in general, for an elastically isotropic solid, $\mathbf{c}_R$ is given as follows. First define the quantity $\varsigma \equiv \mathbf{c}_R/\mathbf{c}_T$. It can then be shown (see Landau et al.) that ς is the solution for the following equation:

$$\xi^6 - 8\xi^4 + 8\xi^2\left(3 - 2\frac{c_T^2}{c_L^2}\right) - 16\left(1 - \frac{c_T^2}{c_L^2}\right) = 0$$

where $\mathbf{c}_T$ and $\mathbf{c}_L$ are the velocities of longitudinal and transverse sound, respectively.

If the material of the film 14 is elastically isotropic, a knowledge of the Rayleigh velocity, together with an assumed value for Poisson's ratio, can be used to estimate the longitudinal and transverse sound velocities in the material of the film 14.

$$\xi^6 - 8\xi^4 + 8\xi^2\left(3 - 2\frac{c_T^2}{c_L^2}\right) - 16\left(1 - \frac{c_T^2}{c_L^2}\right) = 0$$

More specifically, the ratio of the velocity of the transverse and longitudinal sound is given by

$$\frac{c_T}{c_L} = \sqrt{\frac{1-2\sigma}{2(1-\sigma)}}.$$

Therefore,

$$\xi^6 - 8\xi^4 + 8\xi^2\frac{2-\sigma}{1-\sigma} - 16\frac{1}{2(1-\sigma)} = 0$$

Hence, if σ is known, the value of ξ can be calculated from the preceding equation. A measurement of $\mathbf{c}_R$ can then be used to give $\mathbf{c}_T$ via the relation

10

$$c_T = \frac{c_R}{\xi},$$

and $\mathbf{c}_L$ can be found from

$$c_L = c_T\sqrt{\frac{2(1-\sigma)}{1-2\sigma}} = \frac{c_R}{\xi}\sqrt{\frac{2(1-\sigma)}{1-2\sigma}}.$$

For this type of sample, a strain pulse will also propagate away from the surface of the film 14 and into the volume of the film 14. The strain pulse is partially reflected at the interface between the film 14 and the substrate 12, and returns to the free (upper) surface of the film 14. The return of the reflected strain pulse results in a sharp feature in $\Delta\mathbf{R(t)}$ at a time τ_L equal to $\mathbf{2w/c}_L$, where $\mathbf{c}_L$ is the longitudinal sound velocity. Hence, this time can be used to determine the thickness of the film 14. The value of $\mathbf{c}_L$ can be estimated from the results of the measurements of the Rayleigh velocity as described above. Alternatively, for films of known composition and elastic properties, the value of $\mathbf{c}_L$ can be taken from the scientific literature.

A simplified analysis can also be made for those samples 10 in which the thickness of the film 14 is much less than the grating period **w**. In this case the penetration depth of the Rayleigh wave is greater than the thickness of the film 14. Thus, the Rayleigh wave will not be confined within the film thickness and will penetrate into the substrate 12. The velocity of the Rayleigh wave is now dependent on the elastic properties and densities of both the film 14 and the substrate 12, and is also affected by the thickness of the film 14. Measurement of the frequency of the oscillations in $\Delta\mathbf{R(t)}$ gives the Rayleigh wave velocity. There is also a component of the strain that propagates through the thickness of the film 14 and that is reflected back at the interface with the substrate 12, thereby giving the sharp feature in $\Delta\mathbf{R(t)}$ at a time $\mathbf{2w/c}_L$. Again, from the measured Rayleigh wave velocity $\mathbf{c}_R$ and the time τ_L, the longitudinal and transverse sound velocity, and the thickness of the film 14, can be determined.

It is within the scope of these teachings to make a number of variations in these measurement techniques.

For example, the pump light pulse 20 and the measuring probe light pulse 22A can be directed at the surface of the sample 10 at normal or oblique incidence. Furthermore, the angle of incidence of the probe pulse 22A can be the same as the angle of incidence of

the pump pulse 20, or the angle of incidence of the probe pulse 22A may be different than the angle of incidence of the pump pulse 20. Also, the wavelength of the pump and probe beams 20, 22A can be the same, or they can be different. If the wavelengths are different, and for the case where it is desired to detect a diffracted probe beam, the wavelength of the probe beam 22A is set to be less than the line spacing of the mask 16.

In the description given above, the detection of the time varying strain in the sample 10 is made through a measurement of the change in the intensity of the reflected probe light 22B. However, it is also within the scope of these teachings for measurements to be made of the change in the intensity of transmitted (as opposed to reflected) probe light. Also, measurements can be made of a change in the polarization of the reflected or transmitted probe light, a change in the optical phase of the reflected or transmitted probe light, or a change in propagation direction of the reflected or transmitted probe light. Measurements may be made of more than one of these characteristics, such as a measurement of intensity of the reflected or transmitted probe light and a measurement of optical phase of the reflected or transmitted probe light. Further by example, a measurement could be made of the intensity of the transmitted probe light in conjunction with a measurement of optical phase of the reflected probe light.

The pump and/or the probe light can be brought to the mask 16 through free space or through optical fiber(s). Measurements can be made of the component of the probe light that is specularly reflected from the sample (angle of reflection equal to angle of incidence), or diffracted at an angle as a result of the presence of the grating in the mask 16, or from that part of the probe light that is scattered diffusely from the surface of the sample 10.

The mask 16 can be made of a number of transparent materials, such as silica, other glasses, or polymers. It is straightforward to obtain gratings that have a line spacing as small as 2000 Å, and this distance can be made even smaller through the use of electron beam lithography.

The mask 16 can also be constructed using a slab of a transparent material with opposing flat surfaces, and the grating 18 formed with a patterned thin film of a dielectric material, or with a metal deposited onto its lower surface. The thickness of the mask 16 need not be uniform, as a wedged or tapered thickness mask could be used as well.

Furthermore, a single mask 16 could have two or more gratings 18 on the lower surface, where each grating has different line spacings. In this case the pump and probe beams 20, 22A could be directed to different regions of the mask 16 where the spacing of the grating 18 has a chosen value, and in this way a measurement of $\Delta R(t)$ can be made for two or more different values of the spacing **w** of the lines on the grating 18. Alternatively, the pump and probe beams 20, 22A can be directed to a fixed location on the surface of the sample 10, and the mask 16 moved, using a mask positioning system 46 (Fig. 4), so that regions of the mask 16 with different grating line spacing are positioned in the region where the pump and probe beams are located.

In some applications it may advantageous to use a mask 16 having a two dimensional array of grating features (e.g., a square array), rather than a sequence of lines (one-dimensional array).

The mask 16 can be positioned by the mask positioning system 46 by being placed in direct contact with the sample surface, i.e., with the free (upper) surface of the film 14. It is also possible through the use of nanomachining techniques to construct a mask 16 that is prevented from coming into direct contact with the free surface of the film 14 by means of an air cushion produced by passing air through small holes 16A in the mask 16, as is done, for example, in an air track used in physics teaching laboratories. In this case the spacing of the mask 16 from the surface of the film 14 is preferably no larger than the spacing between the lines of the grating 18. It is also within the scope of these teachings to construct a mask 16 that has the grating 18 in a center section that is lower than most or all of a surrounding area of the mask 16, as shown in Fig. 4. That is, the grating portion of the lower surface of the mask 16 is not coplanar with the surrounding surface area. This approach is useful for those samples 10 that have surfaces that are not flat, as it ensures that the grating 18 can be placed in close proximity to the surface of the film 14.

The mask 16 can be lowered onto the sample 10 and raised from the surface of the sample 10 by the mask positioning system 46 using a number of different techniques. For example, electrical or magnetic forces can be applied to the mask 16, or the mask 16 can be raised or lowered by means of air currents.

Measurements can be made on a single film 14 on a substrate 12, on a stack of thin films of different thickness and material composition, or on samples 10 that are laterally patterned. For example, Fig. 6 shows a sample 10 having laterally patterned features

Dropbox Exhibit 1002 - Page 98
Dropbox, Inc. v. Entangled Media, LLC
IPR2024-00285 - U.S. Patent No. 8,484,260

10A, such as embedded metalization lines, and the mask 16 positioned over a surface of the sample 10 in accordance with the teachings herein. The metalization lines need not be embedded, and could as well be located on a top surface of the film 14. In this embodiment it may be advantageous to make the period of the mask 16 match the period of the features 10A, or to mismatch the period of the mask 16 with the period of the features 10A. It may also be advantageous to provide a predetermined relationship between the size(s) of features 10A and the period(s) of the mask 16 (where the mask 16 can be provided with two or more characteristic periods for the grating 18, or where more than one mask is used).

Based on the foregoing it can be appreciated that these teachings overcome the problems discussed above with relation to the prior art. For example, the sound velocity in the sample can be measured directly, and need not be known a priori. Furthermore, the use of the mask relaxes the requirement that the sample characterization apparatus be constructed so as ensure that the phase relation between a plurality of pump beams remains constant, as a single pump beam is sufficient to provide the spatially distributed heating effect at the surface of the sample.

In addition to the changes in reflectivity arising from the strain pulses that are launched in the sample 10, there can be changes in reflectivity that arise from the change in the temperature, and in the density of electrons and holes. The change in reflectivity arising from these effects can be distinguished from the change in reflectivity that arises from the propagation of strain pulses.

More particularly, strain pulses give rise to either sharp pulses (from sound echoing back and forth in a film) or to an oscillatory contribution (from the Rayleigh surface waves), while the contribution to the change in reflectivity that arises from the change in temperature or from the change in the electron and hole concentration varies more smoothly with time.

The teachings of this invention also make it possible to measure the electrical resistivity of a metal film, provided that the film has a thickness lying within a certain range. In this embodiment, a determination is first made of the thermal conductivity κ_{film} of the metal film. From κ_{film} the electrical resistivity ρ_{film} can be calculated using the Wiedemann-Franz law:

$$\rho_{film} = \frac{LT}{\kappa_{film}},$$

where **L** is the Lorenz number and **T** is the absolute temperature (see, for example, C. Kittel, Introduction to Solid State Physics, 7th edition, Wiley, p. 168).

The following is a method for the determination of the thermal conductivity. Consider a metal film of thickness d deposited onto a substrate. Let the mask have a line spacing **w** with lines running parallel to the y axis, and let the normal to the substrate be in the z direction. Assume that the intensity $\mathbf{I_{pump}(x)}$ of the pump light varies with position on the sample surface according to

$$I_{pump}(x) = I^{o}_{pump}[1+\cos(kx)],$$

where $\mathbf{I^o_{pump}}$ is a constant, $\mathbf{k = 2\pi/w}$, and x is an axis running across the surface in a direction perpendicular to the direction of the lines. The form of the intensity variation across the surface of the sample is dependent on the geometry of the mask 16 and on its optical properties. The particular form given above is for illustration and is not intended to imply that this variation will occur for all masks 16. The pump light pulse induces a temperature rise $\mathbf{\Delta T}$ that varies across the sample surface. Again, for illustration, we take this to have the same form:

$$\Delta T(x, z=0) = \Delta T_0[1+\cos(kx)],$$

where $\mathbf{\Delta T_0}$ is a constant. This is the temperature at the surface located on the plane z=0; the temperature rise at a distance below the surface will be less. The variation of the temperature rise with distance z into the film is determined by: 1) the distance ζ that the light penetrates into the metal, 2) by the distance ξ that the conduction electrons that are excited by the light diffuse before they lose their energy to the thermal phonons and come into thermal equilibrium with the lattice (see G. Tas and H.J. Maris, Electron Diffusion in Metals Studied by Picosecond Ultrasonics, Physical Review B 49, 15046 (1994)), and 3) by the film thickness. Note that since the lines on the mask 16 run parallel to the y-axis there is no dependence of the temperature on the coordinate y.

Dropbox Exhibit 1002 - Page 100
Dropbox, Inc. v. Entangled Media, LLC
IPR2024-00285 - U.S. Patent No. 8,484,260

The change in temperature of the sample surface results in a change in the optical reflectivity that is different at each point on the surface. In the absence of the mask 16 it is reasonable, as a first approximation, to consider that the change in reflectivity of the probe beam due to the temperature change would be proportional to the average of the change in temperature taken over the area of the surface onto which the probe light is incident. However, it is important to recognize that the mask 16 distorts the probe beam so that, just like the pump beam, it has a greater intensity at some points on the surface of the sample 10 than at others. If one take the intensity of the probe light at the surface of the sample 10 to vary with position as:

$$I_{probe}(x) = I^{o}_{probe}[1+\cos(kx)],$$

where $\mathbf{I^{o}_{probe}}$ is a constant, then the change $\mathbf{\Delta R}$ in reflectivity is proportional to the average over the surface of the product of the probe intensity with the temperature change at the surface, i.e.,

$$\Delta R \propto \int dx I_{probe}(x)\Delta T(x, z=0)$$
$$\propto I_{probe}[A+B],$$

where

$$A \equiv \int dx \Delta T(x, z=0)$$
$$B \equiv \int dx \cos(kx)\Delta T(x, z=0).$$

At a time **t** after the application of the pump pulse, the temperature distribution in the film will have changed because of heat flow. A measurement of $\mathbf{\Delta R(t)}$ as a function of time can provide information about this heat flow. It should be noted that the reflectivity change $\mathbf{\Delta R}$ contains the term **A** which is proportional to the temperature change of the film averaged across its surface, and also contains the term **B** that vanishes when the temperature distribution across the film surface is uniform. Thus, $\mathbf{\Delta R(t)}$ is affected both by heat flow out of the film into the substrate (this primarily affects the term **A**), as well as by heat flow within the film which tends to make the temperature distribution across the surface of the film uniform, and hence reduces the magnitude of the term **B**.

The heat flow within the metal film may have components both parallel and perpendicular to the plane of the film. The heat flux $\overline{q}$ at any point is equal to $\kappa_{film}\nabla\mathbf{T}$, where κ_{film} is the thermal conductivity of the metal film. The heat flow across the interface into the substrate per unit area is equal to $\sigma_K\Delta\mathbf{T}_{int}$, where $\Delta\mathbf{T}_{int}$ is the temperature jump across the interface and σ_K is the Kapitza conductance at the interface. Note that since $\Delta\mathbf{T}_{int}$ is the difference between the temperature of the film and the temperature of the substrate, this heat flow is also affected by the thermal conductivity κ_{sub} of the substrate.

Referring now to Fig. 5, one procedure for the determination of the electrical resistivity of the metal film is as follows:

Step (A): $\Delta\mathbf{R(t)}$ is measured as a function of the time **t** after the application of the pump pulse using a mask of known repeat distance **w**.

Step (B): Values are assumed for the thermal conductivity κ_{film} of the film, the thermal conductivity κ_{sub} of the substrate, and the Kapitza conductance σ_K between the film and the substrate.

Step (C): The initial temperature distribution within the film is calculated. This calculation is preferably based on the known geometry, line spacing or repeat distance **w** and on the optical characteristics of the mask 16. The temperature distribution is affected by the diffusion coefficient of the hot electrons excited by the pump pulse. This diffusion coefficient can be estimated from the assumed value of the thermal conductivity of the film, as described by Tas and Maris in the publication referenced above.

Step (D): The temperature distribution within the film is then calculated at later times based on the assumed values for the thermal conductivity of the film, the thermal conductivity of the substrate, and the Kapitza conductance between the film and the substrate.

Step (E): The expected change in reflectivity $\Delta\mathbf{R(t)}$ based on the temperature distribution determined in Step (D) is then calculated.

Step (F) The parameters κ_{film}, κ_{sub}, and σ_K, are then adjusted, and Steps (C)-(E) are repeated so as to obtain a best fit to the measured $\Delta\mathbf{R(t)}$.

The electrical resistivity of the film is then calculated using the thermal conductivity, as described above.

It is important to note that the optimum choice of the repeat distance **w** of the mask 16 depends on the thickness **d** of the film and on the values of κ_{film}, κ_{sub}, and σ_K. For

Dropbox Exhibit 1002 - Page 102
Dropbox, Inc. v. Entangled Media, LLC
IPR2024-00285 - U.S. Patent No. 8,484,260

example, if **w** is chosen to be too small, the hot electrons will diffuse so far that the initial temperature distribution will be almost uniform across the surface of the film, i.e., the temperature distribution in the film will be independent of x. The term B will then be absent. Suppose now that it is also true that the thickness of the film **d** is less than the diffusion length ξ. In this case the initial temperature distribution throughout the film will be uniform. As a result, the temperature at later times, and hence also the reflectivity change $\Delta R(t)$, will only be affected by the Kapitza conductance σ_K. Under these conditions, the measurement of $\Delta R(t)$ generally cannot be readily analyzed to determine the thermal conductivity of the film.

It is noted that if the mask 16 is not used, the initial temperature distribution would be uniform across the sample surface. For films whose parameters **d**, κ_{film}, κ_{sub}, and σ_K lie in a suitable range it would be possible to perform an analysis of the measured $\Delta R(t)$ to determine κ_{film}. However, the range of film parameters for which the accurate determination of κ_{film} is possible is greatly increased through the use of a mask 16 of suitably chosen repeat distance **w**.

It is within the scope of the teachings of this invention to make measurements on a single sample using a series of masks 16 of different repeat distances **w**, and to fit the totality of results so obtained by adjustment of the parameters κ_{film}, κ_{sub}, and σ_K.

As an alternate method, one may compare the measured $\Delta R(t)$ on a sample of unknown resistance with the results of measurements of $\Delta R(t)$.

The mask 16 can also be used to advantage for the characterization of samples 10 into which ions have been implanted (or, more generally, the mask 16 may be used with altered materials). Reference with regard to such altered materials may be made to U.S. Patent No.: 5,706,094, "Ultrafast Technique for the Characterization of Altered Materials", by H.J. Maris, as well as to U.S. Patent No.: 6,008,906, "Optical Method for the Characterization of the Electrical Properties of Semiconductors and Insulating Films", by H.J. Maris.

In general, the characteristics of a sample 10 that has been ion implanted are affected by the following parameters:

(A) the number of ions implanted per unit area of the surface of the sample 10, referred to as the dose;

(B) the kinetic energy of the ions that are directed at the sample surface, referred to as

Dropbox Exhibit 1002 - Page 103
Dropbox, Inc. v. Entangled Media, LLC
IPR2024-00285 - U.S. Patent No. 8,484,260

the energy;
(C) the direction at which the ion beam is incident onto the sample 10;
(D) the ion current per unit area during the implant process;
(E) the species of the implanted ion;
(F) the charge on the ion, e.g., singly or double ionized;
(G) the duration of time that the ion-implanted sample 10 is annealed; and
(H) the temperature at which the ion-implanted sample 10 is annealed.

In the above-referenced U.S. Patent No.: 5,706,094 it was disclosed to investigate as many as possible of these characteristics through measurements of the change in reflectivity $\Delta R(t)$ of the probe pulse applied directly to the surface at a time **t** after the application of the pump pulse. Experimental parameters that were varied included the wavelength of the pump and/or the probe light, where a change in wavelength changes the distance over which the pump and probe light is absorbed; and the intensity of the pump and/or the probe light, which changes the density of electrons and holes excited in the sample.

While a variation in the wavelength and/or the intensity can be helpful in providing a more extended characterization of a sample, it may be difficult to obtain a complete characterization of a sample 10 by these means alone, given the large number of sample parameters that can affect the measurement. In addition, while it is possible to build an instrument in which the wavelength of the pump and/or the probe light can be selected to have two different values (for example, by the use of a frequency doubling crystal), it can be difficult to build an instrument in which the pump and probe wavelengths are continuously adjustable.

The use of present invention has the advantage that the repeat distance **w** of the mask 16 can be selected so as to optimize the amount of information that can be obtained for a particular type of sample. The mask repeat distance can also be selected so as to make the measured $\Delta R(t)$ particularly sensitive to one or more of the sample characteristics (A)-(H) listed above. Furthermore, measurements can be made for a number of different mask 16 repeat distances **w** in order to achieve a more complete characterization. Also, measurements can be made for line masks or for masks 16 with two dimensional arrays of features.

For the analysis of the data, the most practical method in many applications may be by comparison with data taken on reference samples of known characteristics. However, the

data analysis may also be performed by comparison of the data to simulations, together with adjustment of parameters and iteration to achieve a best fit.

While the invention has been particularly shown and described with respect to preferred embodiments thereof, it will be understood by those skilled in the art that changes in form and details may be made therein without departing from the scope and spirit of the invention.

Dropbox Exhibit 1002 - Page 105
Dropbox, Inc. v. Entangled Media, LLC
IPR2024-00285 - U.S. Patent No. 8,484,260

CLAIMS

What is claimed is:

1. A method for determining at least one characteristic of a sample comprising a substrate and at least one film disposed on or over a surface of the substrate, comprising steps of:

placing a mask over a free surface of the at least one film, the mask having a top surface and a bottom surface that is placed adjacent to the free surface of the film, the bottom surface of the mask comprising a plurality of features forming at least one grating;

directing optical pump pulses through the mask to the free surface of the film, individual ones of the pump pulses being followed by at least one optical probe pulse, said pump pulses being spatially distributed by said at least one grating for launching a plurality of spatially distributed strain pulses within the film, said strain pulses causing a change in optical constants of the film;

detecting a reflected or transmitted portion of said probe pulses, said probe pulses also being spatially distributed by said at least one grating;

measuring a change in at least one characteristic of at least one of reflected or transmitted probe pulses due to the change in optical constants; and

determining the at least one characteristic of the sample from the measured change in the at least one characteristic of the probe pulses.

2. A method as in claim 1, wherein the determined at least one characteristic of the sample is film thickness.

3. A method as in claim 1, wherein the determined at least one characteristic of the sample is an adhesion between the film and the substrate.

4. A method as in claim 1, wherein the determined at least one characteristic of the sample is an adhesion between the film and another film.

5. A method as in claim 1, wherein the determined at least one characteristic of the sample is an orientation of crystalline grains that comprise the film.

6. A method as in claim 1, wherein the determined at least one characteristic of the sample is a size of crystalline grains that comprise the film.

7. A method as in claim 1, wherein the determined at least one characteristic of the sample is a crystal phase of a film.

8. A method as in claim 1, wherein said pump pulses being spatially distributed by said at least one grating induce a spatial variation in temperature of the film, wherein the variation in temperature causes a change in optical constants of the film, and where the determined at least one characteristic of the sample is an electrical resistivity of the film.

9. A method as in claim 1, wherein the determined at least one characteristic of the sample is a rate of electromigration within the film.

10. A method as in claim 1, wherein the determined at least one characteristic of the sample is a yield stress of the film.

11. A method as in claim 1, wherein the step of determining the at least one characteristic of the sample comprises steps of:

simulating a response of the sample to the application of the pump pulses through said mask using assumed sample properties;

comparing the measured change in the least one characteristic of the probe pulses to the simulated response; and

changing the assumed sample properties, and repeating the steps of simulating and comparing until the measured change agrees with a result of the simulation.

12. A method as in claim 1, wherein the step of measuring measures at least one of an intensity of reflected or transmitted probe pulses; a polarization of reflected or transmitted probe pulses, a change in an optical phase of reflected or transmitted probe pulses, and a change in a propagation direction of reflected or transmitted probe pulses.

13. A method as in claim 1, wherein said mask has a period that is a function of a thickness of said at least one film.

14. A method as in claim 1, wherein said mask has a period that is greater than a thickness of said at least one film.

15. A method as in claim 1, wherein said mask has a period that is less than a thickness of said at least one film.

16. A method as in claim 1, wherein said pump pulses excite a Rayleigh standing surface wave in the film of wavelength $\lambda = w$, where **w** is the grating period, the Rayleigh standing surface wave having a frequency given by $f_R = c_R/w$, where c_R is the Rayleigh wave velocity, the standing wave causing a periodic modulation of elastic strain in the film which in turn causes a contribution to $\Delta R(t)$ that varies in time with the frequency f_R, further comprising steps of:

analyzing a measured $\Delta R(t)$ to obtain the frequency f_R, and from this frequency, and from a known value of **w**, determining the Raleigh wave velocity of material that comprises the film; and

using the determined Rayleigh wave velocity, together with a value for Poisson's ratio, estimating longitudinal and transverse sound velocities in the material that comprises the film.

17. A method as in claim 16, wherein for a case where **w** is less than a thickness of the film, strain pulses are partially reflected at an interface between the film and the substrate and return to the upper surface of the film resulting in a sharp feature in $\Delta R(t)$ at a time τ_L equal to $2w/c_L$, where c_L is the longitudinal sound velocity, and further comprising a step of determining the thickness of the film using the time τ_L.

18. A method as in claim 16, wherein for a case where **w** is greater than a thickness of the film, wherein the velocity of the Rayleigh wave is dependent on elastic properties and densities of both the film and the substrate, and is also dependent on the thickness of the film, further comprising steps of:

measuring frequency of oscillations in $\Delta R(t)$ to obtain the Rayleigh wave velocity c_R;

Dropbox Exhibit 1002 - Page 108
Dropbox, Inc. v. Entangled Media, LLC
IPR2024-00285 - U.S. Patent No. 8,484,260

detecting a component of the strain pulse that propagates through the thickness of the film and that is reflected back at the interface with the substrate, thereby giving a sharp feature in $\Delta R(t)$ at a time $2w/c_L$; and

using the determined Rayleigh wave velocity c_R and a time τ_L equal to $2w/c_L$, where c_L is the longitudinal sound velocity, determining the longitudinal and transverse sound velocity and the thickness of the film.

19. A method as in claim 1, wherein at least one of the pump pulses and the probe pulses are directed through the mask at normal incidence to the free surface of the film.

20. A method as in claim 1, wherein at least one of the pump pulses and the probe pulses are directed through the mask at oblique incidence to the free surface of the film.

21. A method as in claim 1, wherein the sample comprises features that are laterally patterned.

22. A system for determining at least one characteristic of a sample comprising a substrate and at least one film disposed on or over a surface of the substrate, comprising:

a mask adapted for being placed over a free surface of the at least one film, the mask having a top surface and a bottom surface that is placed adjacent to the free surface of the film, the bottom surface of the mask comprising a plurality of features forming at least one grating;

an optical system for directing optical pump pulses through the mask to the free surface of the film, individual ones of the pump pulses being followed by at least one optical probe pulse, said pump pulses being spatially distributed by said at least one grating for launching a plurality of spatially distributed strain pulses within the film, said strain pulses causing a change in optical constants of the film;

an optical detector for detecting a reflected or transmitted portion of said probe pulses, said probe pulses also being spatially distributed by said at least one grating; and

a data processor for measuring a change in at least one characteristic of at least one of reflected or transmitted probe pulses due to the change in optical constants and for determining the at least one characteristic of the sample from the measured change in the at least one characteristic of the probe pulses.

23. A system as in claim 22, wherein the determined at least one characteristic of the sample is selected from one of film thickness, an adhesion between the film and the substrate, an adhesion between the film and another film, an orientation of crystalline grains that comprise the film, a size of crystalline grains that comprise the film, a crystal phase of a film, a rate of electromigration within the film, and a yield stress of the film, further wherein said pump pulses being spatially distributed by said at least one grating induce a spatial variation in temperature of the film, wherein the variation in temperature causes a change in optical constants of the film, and where the determined at least one characteristic of the sample is an electrical resistivity of the film..

24. A system as in claim 22, wherein said data processor operates to simulate a response of the sample to the application of the pump pulses through said mask using assumed sample properties, to compare the measured change in the least one characteristic of the probe pulses to the simulated response, and to change the assumed sample properties and iteratively simulate and compare until the measured change agrees with a result of the simulation.

25. A system as in claim 22, wherein said data processor measures at least one of an intensity of reflected or transmitted probe pulses; a polarization of reflected or transmitted probe pulses, a change in an optical phase of reflected or transmitted probe pulses, and a change in a propagation direction of reflected or transmitted probe pulses.

26. A system as in claim 22, wherein said mask has a period that is a function of a thickness of said at least one film.

27. A system as in claim 22, wherein said pump pulses excite a Rayleigh standing surface wave in the film of wavelength $\lambda = w$, where w is the grating period, the Rayleigh standing surface wave having a frequency given by $f_R = c_R/w$, where c_R is the Rayleigh wave velocity, the standing wave causing a periodic modulation of elastic strain in the film which in turn causes a contribution to $\Delta R(t)$ that varies in time with the frequency f_R, and where said data processor operates to analyze a measured $\Delta R(t)$ to obtain the frequency f_R, and from this frequency, and from a known value of w, to

Dropbox Exhibit 1002 - Page 110
Dropbox, Inc. v. Entangled Media, LLC
IPR2024-00285 - U.S. Patent No. 8,484,260

determine the Raleigh wave velocity of material that comprises the film; and further operates, using the determined Rayleigh wave velocity, together with a value for Poisson's ratio, to estimate longitudinal and transverse sound velocities in the material that comprises the film.

28. A system as in claim 27, where for a case where **w** is less than a thickness of the film, strain pulses are partially reflected at an interface between the film and the substrate and return to the upper surface of the film resulting in a sharp feature in $\Delta R(t)$ at a time τ_L equal to $2w/c_L$, where c_L is the longitudinal sound velocity, and where said data processor determines the thickness of the film using the time τ_L.

29. A system as in claim 27, where for a case where **w** is greater than a thickness of the film, where the velocity of the Rayleigh wave is dependent on elastic properties and densities of both the film and the substrate, and is also dependent on the thickness of the film, said data processor further operates to measure frequency of oscillations in $\Delta R(t)$ to obtain the Rayleigh wave velocity c_R; to detect a component of the strain pulses that propagates through the thickness of the film and that is reflected back at the interface with the substrate, thereby giving a sharp feature in $\Delta R(t)$ at a time $2w/c_L$; and, using the determined Rayleigh wave velocity c_R and a time τ_L equal to $2w/c_L$, where c_L is the longitudinal sound velocity, to determine the longitudinal and transverse sound velocity and the thickness of the film.

30. A system as in claim 22, wherein at least one of the pump pulses and the probe pulses are directed through said mask by said optical system at normal incidence to the free surface of the film.

31. A system as in claim 22, wherein at least one of the pump pulses and the probe pulses are directed through said mask by said optical system at oblique incidence to the free surface of the film.

32. A system as in claim 22, wherein the sample comprises features that are laterally patterned.

32. A system as in claim 22, wherein the sample includes at least one region that is implanted during an ion implant process, wherein said pump pulses being spatially distributed by said at least one grating generate a spatially distributed density of electrons and holes within the sample, said spatially distributed density of electrons and holes

Dropbox Exhibit 1002 - Page 111
Dropbox, Inc. v. Entangled Media, LLC
IPR2024-00285 - U.S. Patent No. 8,484,260

causing a change in optical constants of the sample, and wherein the determined at least one characteristic of the sample is related to at least one of (A) a number of ions implanted per unit area of the surface of the sample; (B) a kinetic energy of the ions that are directed at the surface of the sample; (C) a direction at which the ion beam is incident onto the surface of the sample; (D) an ion current per unit area during the ion implant process; (E) the species of the implanted ion; (F) the charge on the implanted ion; (G) a duration of time that the ion-implanted sample is annealed; and (H) a temperature at which the ion-implanted sample is annealed.

33. A mask adapted to be placed over a free surface of a film to be characterized, said mask being transparent and having a top surface and a bottom surface that is placed adjacent to the free surface of the film, the bottom surface of said mask comprising a plurality of features forming at least one grating for spatially distributing optical pump pulses so as to launch a plurality of spatially distributed strain pulses within the film, the strain pulses causing a change in optical constants of the film, said at least one grating further for spatially distributing optical probe pulses individual ones of which are applied after an individual one of the optical pump pulses.

34. A mask as in claim 33, wherein features of said grating are spaced apart by an amount that is a function of a thickness of the film.

35. A mask as in claim 33, wherein features of said grating form a one dimensional or a two dimensional array of features.

36. A mask as in claim 33, wherein features of said grating are etched into said bottom surface.

37. A mask as in claim 33, wherein features of said grating are formed upon said bottom surface.

38. A mask as in claim 33, wherein said mask has a non-uniform thickness such that features of said grating are at least partially surrounded by an area of said bottom surface that is not coplanar with said features.

39. A method for determining the electrical resistivity of a film that comprises part of a sample having an underlying substrate, comprising steps of:

(A) placing a mask over a free surface of the film, the mask having a top surface and a bottom surface that is placed adjacent to the free surface of the film, the bottom surface of the mask comprising a plurality of features having a known feature repeat distance **w**;

(B) directing optical pump pulses through the mask to the free surface of the film, individual ones of the pump pulses being followed by at least one optical probe pulse, said pump pulses being spatially distributed by said at least one grating for spatially varying the temperature within the film and causing a causing a change in optical constants of the film;

(C) detecting a reflected or transmitted portion of said probe pulses, said probe pulses also being spatially distributed by said at least one grating;

(D) measuring $\Delta R(t)$ as a function of a time **t** after the application of the pump pulses using the mask of known repeat distance **w**;

(E) assuming values for the thermal conductivity κ_{film} of the film, the thermal conductivity κ_{sub} of the substrate, and the Kapitza conductance σ_K between the film and the substrate;

(F) calculating an initial temperature distribution within the film;

(G) calculating the temperature distribution within the film at later times based on the assumed values for the thermal conductivity of the film, the thermal conductivity of the substrate, and the Kapitza conductance between the film and the substrate;

(H) calculating an expected change in reflectivity $\Delta R(t)$ based on the calculated temperature distribution;

(I) adjusting the parameters κ_{film}, κ_{sub}, and σ_K, and repeating Steps (F)-(H) so as to obtain a best fit to the measured $\Delta R(t)$; and

(J) calculating the electrical resistivity from the thermal conductivity.

40. A method for determining at least one characteristic of a sample comprising

a substrate and at least one film disposed on or over a surface of the substrate, the sample further comprising at least one region that is implanted during an ion implant process, comprising steps of:

placing a mask over a free surface of the at least one film, the mask having a top surface and a bottom surface that is placed adjacent to the free surface of the film, the bottom surface of the mask comprising a plurality of features forming at least one grating;

directing optical pump pulses through the mask to the free surface of the film, individual ones of the pump pulses being followed by at least one optical probe pulse, said pump pulses being spatially distributed by said at least one grating for generating a spatially distributed density of electrons and holes within the sample, said spatially distributed density of electrons and holes causing a change in optical constants of the sample;

detecting a reflected or transmitted portion of said probe pulses, said probe pulses also being spatially distributed by said at least one grating;

measuring a change in at least one characteristic of at least one of reflected or transmitted probe pulses due to the change in optical constants; and

determining at least one characteristic of the ion implanted region from the measured change in the at least one characteristic of the probe pulses.

41. A method as in claim 40, wherein the determined at least one characteristic is related to a number of ions implanted per unit area of the surface of the sample.

42. A method as in claim 40, wherein the determined at least one characteristic is related to a kinetic energy of the ions that are directed at the surface of the sample.

43. A method as in claim 40, wherein the determined at least one characteristic is related to a direction at which an ion beam is incident onto the surface of the sample.

44. A method as in claim 40, wherein the determined at least one characteristic is related to an ion current per unit area during the ion implant process.

Dropbox Exhibit 1002 - Page 114
Dropbox, Inc. v. Entangled Media, LLC
IPR2024-00285 - U.S. Patent No. 8,484,260

45. A method as in claim 40, wherein the determined at least one characteristic is related to the species of the implanted ion.

46. A method as in claim 40, wherein the determined at least one characteristic is related to the charge on the implanted ion.

47. A method as in claim 40, wherein the determined at least one characteristic is related to a duration of time that the ion-implanted sample is annealed.

48. A method as in claim 40, wherein the determined at least one characteristic is related to a temperature at which the ion-implanted sample is annealed.

49. A system for determining at least one characteristic of a sample comprising a substrate and at least one film disposed on or over a surface of the substrate, the sample comprising at least one region that is implanted during an ion implant process, comprising:

a mask adapted for being placed over a free surface of the at least one film, the mask having a top surface and a bottom surface that is placed adjacent to the free surface of the film, the bottom surface of the mask comprising a plurality of features forming at least one grating;

an optical system for directing optical pump pulses through the mask to the free surface of the film, individual ones of the pump pulses being followed by at least one optical probe pulse, said pump pulses being spatially distributed by said at least one grating for generating a spatially distributed density of electrons and holes within the sample, said spatially distributed density of electrons and holes causing a change in optical constants of the sample;

an optical detector for detecting a reflected or transmitted portion of said probe pulses, said probe pulses also being spatially distributed by said at least one grating; and

a data processor for measuring a change in at least one characteristic of at least one of reflected or transmitted probe pulses due to the change in optical constants and for determining at least one characteristic of the ion implanted region from the measured change in the at least one characteristic of the probe

Dropbox Exhibit 1002 - Page 115
Dropbox, Inc. v. Entangled Media, LLC
IPR2024-00285 - U.S. Patent No. 8,484,260

pulses.

50. A system as in claim 49, wherein the determined at least one characteristic is related to at least one of (A) a number of ions implanted per unit area of the surface of the sample; (B) a kinetic energy of the ions that are directed at the surface of the sample; (C) a direction at which the ion beam is incident onto the surface of the sample; (D) an ion current per unit area during the ion implant process; (E) the species of the implanted ion; (F) the charge on the implanted ion; (G) a duration of time that the ion-implanted sample is annealed; and (H) a temperature at which the ion-implanted sample is annealed.

51. A method for determining at least one characteristic of a sample comprising a substrate and at least one film disposed on or over a surface of the substrate, comprising steps of:

placing a mask over a free surface of the at least one film, the mask having a top surface and a bottom surface that is placed adjacent to the free surface of the film, the bottom surface of the mask comprising a plurality of features forming at least one grating;

directing optical pump pulses through the mask to the free surface of the film, individual ones of the pump pulses being followed by at least one optical probe pulse, said pump pulses being spatially distributed by said at least one grating for generating a spatially distributed variation in temperature in the film, said spatially distributed variation in temperature causing a change in optical constants of the film;

detecting a reflected or transmitted portion of said probe pulses, said probe pulses also being spatially distributed by said at least one grating;

measuring a change in at least one characteristic of at least one of reflected or transmitted probe pulses due to the change in optical constants; and

determining the at least one characteristic of the sample from the measured change in the at least one characteristic of the probe pulses.

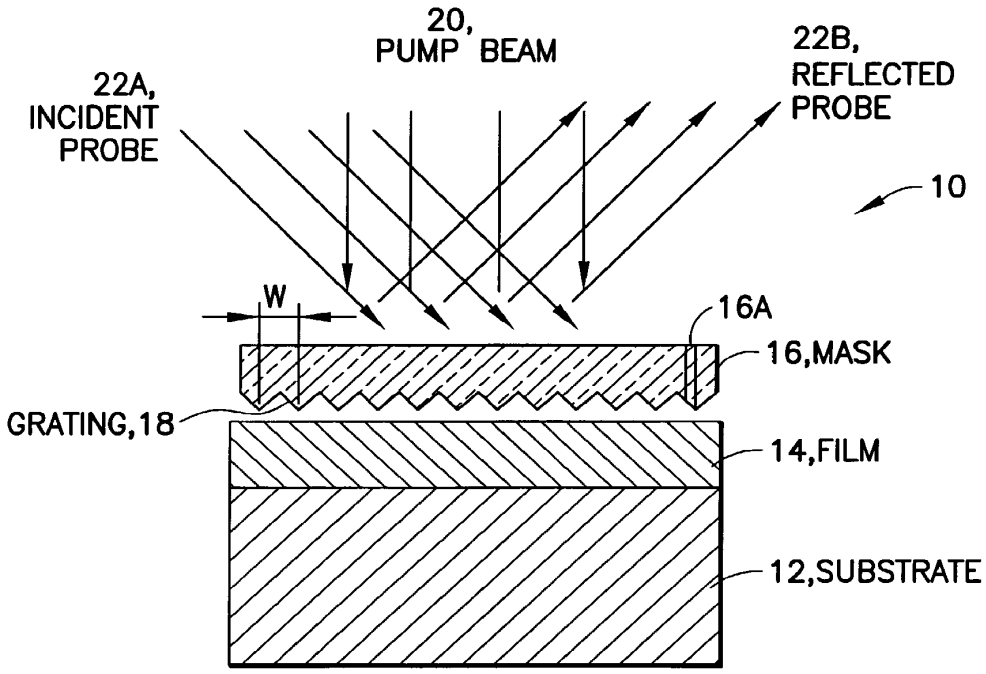
20,
PUMP BEAM
22A,
INCIDENT
PROBE
22B,
REFLECTED
PROBE
10
W
16A
16,MASK
GRATING,18
14,FILM
12,SUBSTRATE

FIG. 1

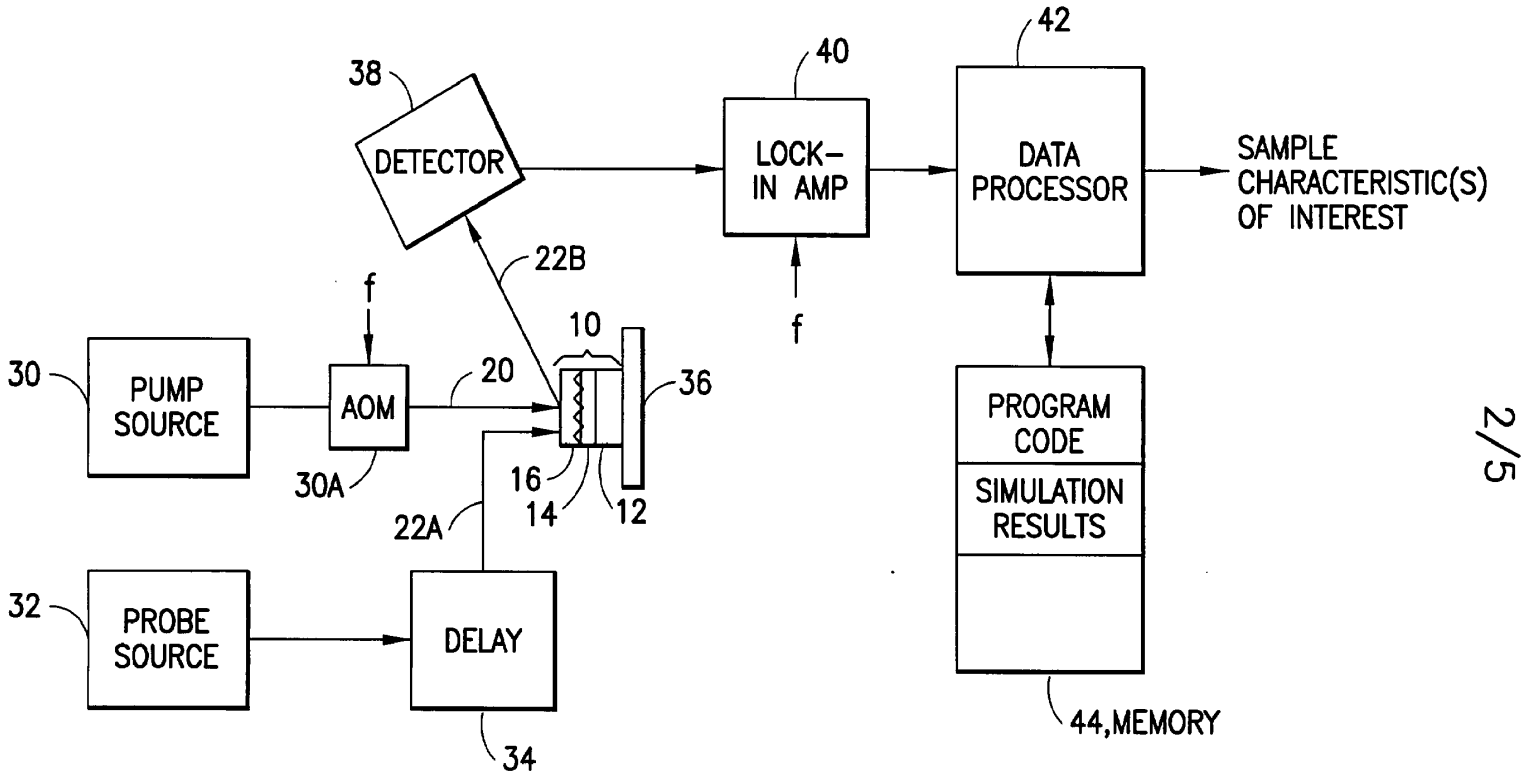

FIG.2

Dropbox Exhibit 1002 - Page 118
Dropbox, Inc. v. Entangled Media, LLC
IPR2024-00285 - U.S. Patent No. 8,484,260

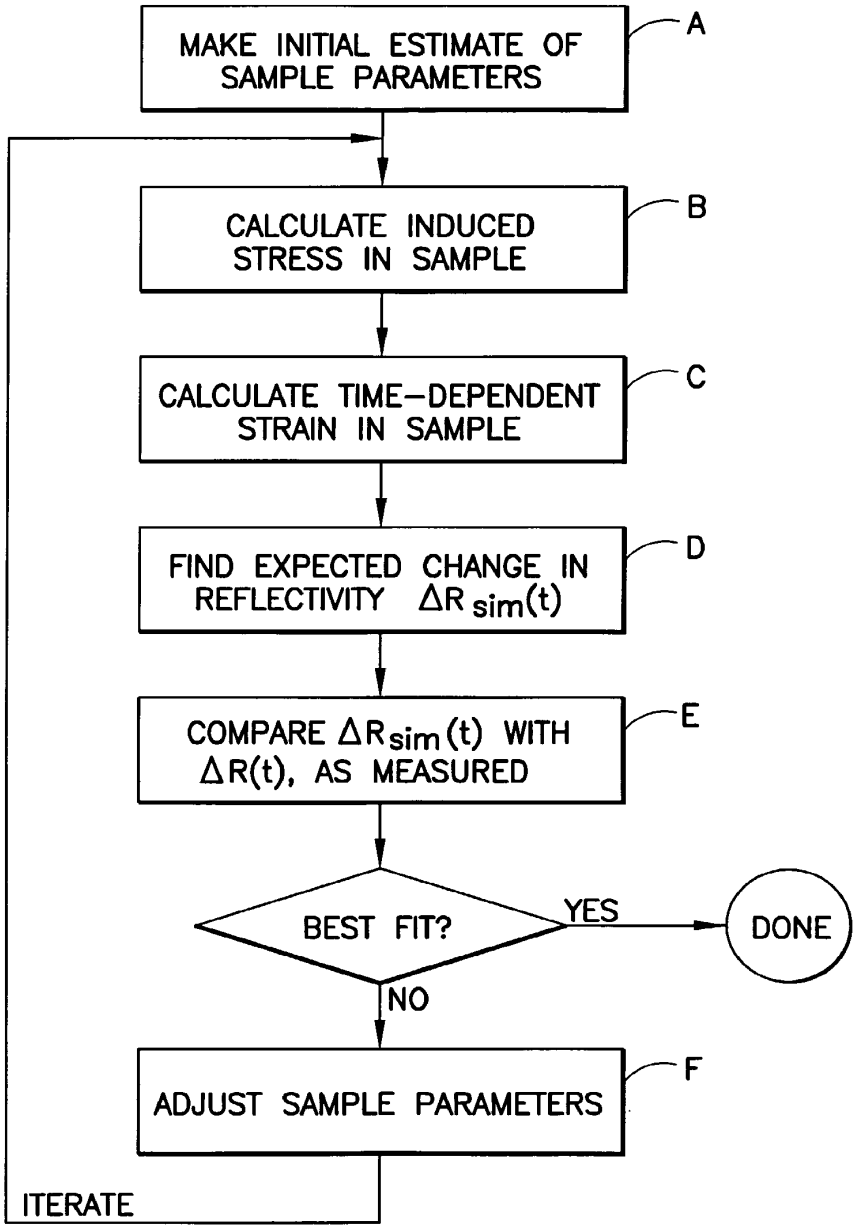
MAKE INITIAL ESTIMATE OF SAMPLE PARAMETERS
A
CALCULATE INDUCED STRESS IN SAMPLE
B
CALCULATE TIME-DEPENDENT STRAIN IN SAMPLE
C
FIND EXPECTED CHANGE IN REFLECTIVITY $\Delta R_{sim}(t)$
D
COMPARE $\Delta R_{sim}(t)$ WITH $\Delta R(t)$, AS MEASURED
E
BEST FIT?
YES
DONE
NO
ADJUST SAMPLE PARAMETERS
F
ITERATE

FIG.3

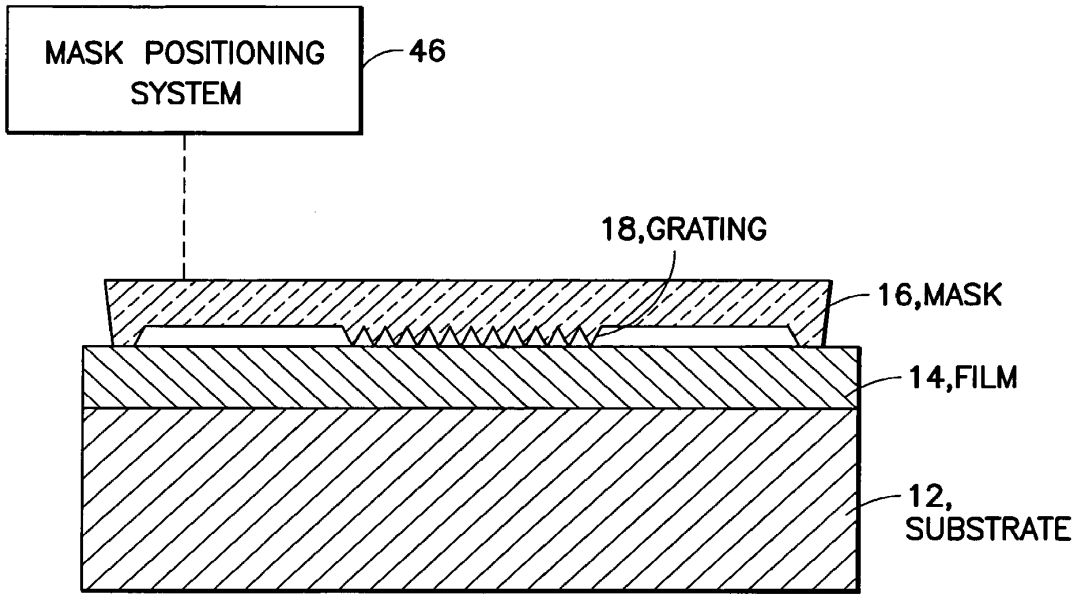
MASK POSITIONING SYSTEM
46
18,GRATING
16,MASK
14,FILM
12, SUBSTRATE

FIG.4

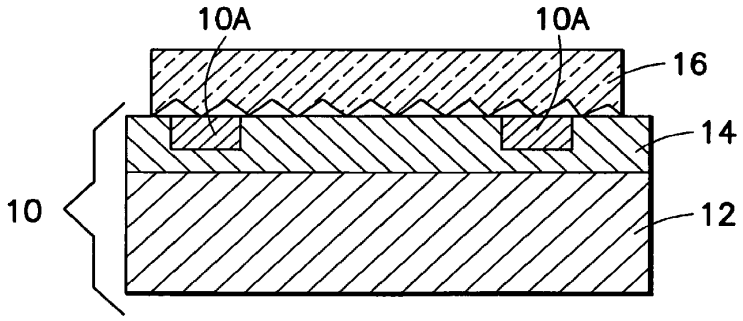
10A
10A
16
14
12
10

FIG.6

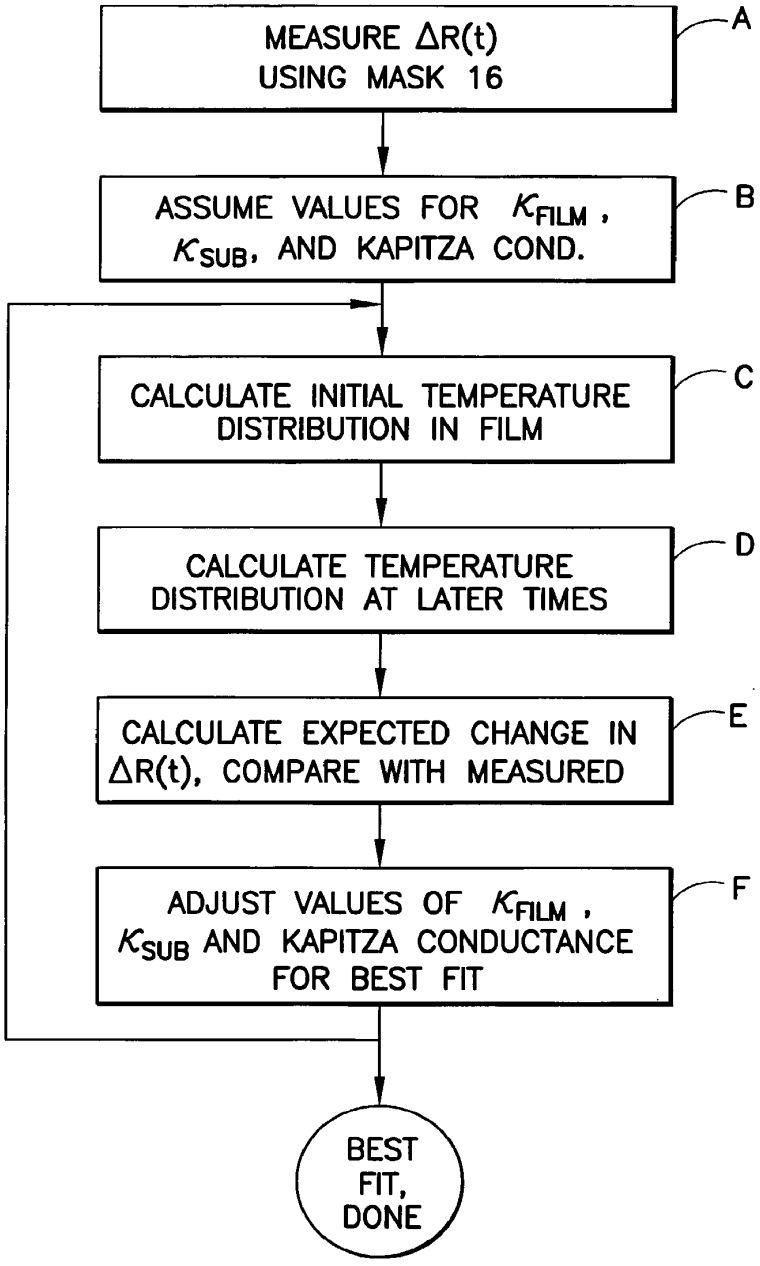
MEASURE ΔR(t) USING MASK 16
A
ASSUME VALUES FOR κ_{FILM}, κ_{SUB}, AND KAPITZA COND.
B
CALCULATE INITIAL TEMPERATURE DISTRIBUTION IN FILM
C
CALCULATE TEMPERATURE DISTRIBUTION AT LATER TIMES
D
CALCULATE EXPECTED CHANGE IN ΔR(t), COMPARE WITH MEASURED
E
ADJUST VALUES OF κ_{FILM}, κ_{SUB} AND KAPITZA CONDUCTANCE FOR BEST FIT
F
BEST FIT, DONE

FIG.5

(12) INTERNATIONAL APPLICATION PUBLISHED UNDER THE PATENT COOPERATION TREATY (PCT)

(19) World Intellectual Property Organization
International Bureau

(43) International Publication Date
7 June 2001 (07.06.2001)

PCT

(10) International Publication Number
WO 01/40887 A1

(51) International Patent Classification[7]: G05B 23/02, G06F 15/16

(21) International Application Number: PCT/US00/32734

(22) International Filing Date: 1 December 2000 (01.12.2000)

(25) Filing Language: English

(26) Publication Language: English

(30) Priority Data:
09/454,178 2 December 1999 (02.12.1999) US
09/608,685 29 June 2000 (29.06.2000) US

(71) Applicant: **SENVID, INC.** [US/US]; 2995 Woodside Road, #400-438, Woodside, CA 94062 (US).

(72) Inventors: **HESSELINK, Lambertus**; 101 Greenoaks Drive, Atherton, CA 94027 (US). **RIZAL, Dharmarus**; 353 Everett Avenue, #106, Palo Alto, CA 94301 (US). **VAN BEURDEN, Joep**; 10395 Melissa Court, Cupertino, CA 95014 (US).

(74) Agents: **TEST, Aldo, J.** et al.; Flehr Hohbach Test Albritton & Herbert LLP, 4 Embarcadero Center, Suite 3400, San Francisco, CA 94111-4187 (US).

(81) Designated States *(national)*: AE, AL, AM, AT, AU, AZ, BA, BB, BG, BR, BY, CA, CH, CN, CU, CZ, DE, DK, EE, ES, FI, GB, GD, GE, GH, GM, HR, HU, ID, IL, IN, IS, JP, KE, KG, KP, KR, KZ, LC, LK, LR, LS, LT, LU, LV, MD, MG, MK, MN, MW, MX, NO, NZ, PL, PT, RO, RU, SD, SE, SG, SI, SK, SL, TJ, TM, TR, TT, UA, UG, UZ, VN, YU, ZA, ZW.

(84) Designated States *(regional)*: ARIPO patent (GH, GM, KE, LS, MW, MZ, SD, SL, SZ, TZ, UG, ZW), Eurasian patent (AM, AZ, BY, KG, KZ, MD, RU, TJ, TM), European patent (AT, BE, CH, CY, DE, DK, ES, FI, FR, GB, GR, IE, IT, LU, MC, NL, PT, SE, TR), OAPI patent (BF, BJ, CF, CG, CI, CM, GA, GN, GW, ML, MR, NE, SN, TD, TG).

[Continued on next page]

(54) Title: METHOD, SYSTEM AND SERVICE MODEL FOR REMOTE RECORDING OF TELEVISION PROGRAMS

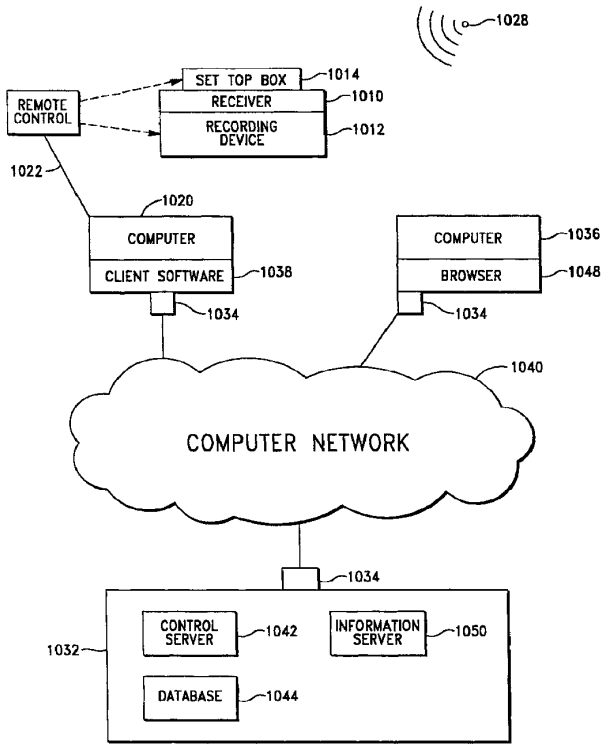

(57) Abstract: Entities (1020, 1036) connected to computer networks such as the Internet (1040) and web-browser software (1048) can schedule recordings of television programs and/or operate the recording equipment (1012). In an example scenario, a user who maintains recording equipment (1012) at home may utilize the present invention from his or her workplace or vacation place, accesses a service provider website (1050) with her/his user name and password, views the schedule of television programs provided by a broadcaster or other distributor of programming and selects the television programs to be recorded. The application service provider (1042) in turn transmits the selected television program information to a computer (1020) connected to a later described remote control unit (1018) to execute and operate the recording of selected programs. In this manner, the present invention enables anyone with Internet access to remotely operate recording equipment to record television programs.

WO 01/40887 A1

Dropbox Exhibit 1002 - Page 122
Dropbox, Inc. v. Entangled Media, LLC
IPR2024-00285 - U.S. Patent No. 8,484,260

Published:
— *With international search report.*

For two-letter codes and other abbreviations, refer to the "Guidance Notes on Codes and Abbreviations" appearing at the beginning of each regular issue of the PCT Gazette.

METHOD, SYSTEM AND SERVICE MODEL FOR REMOTE RECORDING OF TELEVISION PROGRAMS

This application is a continuation in part of U.S. patent application serial no. 09/454,178, "Control and Observation of Physical Devices, Equipment and Processes by Multiple Users Over Computer Networks," filed December 2, 1999, which is co-pending.

FIELD OF THE INVENTION

The present invention relates broadly to the remote control of signal recording equipment. Specifically, the present invention relates to the control of remotely located recording equipment via a computer network.

BACKGROUND OF THE INVENTION

Most consumer video/audio recording equipment today such as the video cassette recorder (VCR) is equipped with scheduling features. Scheduling features allow users to schedule recording of television programs based on user-specified time and channels. Most equipment can be controlled by remote control. However, for average users the process of scheduling television program recordings can be cumbersome. The user must be present at the location of recording equipment where a remote control unit is situated within an effective operating distance of the recording device. In the case where the remote control unit transmits commands in the form of infrared signals, the remote control unit must also establish line of sight to the recording equipment. Before operating a timer mechanism in conjunction with the recording equipment, the internal clock of video/audio recording equipment must be set to conform to local time. A user reviews schedule information of television programs to be recorded, such as program date, time and channel. A user typically

Dropbox Exhibit 1002 - Page 124
Dropbox, Inc. v. Entangled Media, LLC
IPR2024-00285 - U.S. Patent No. 8,484,260

selects a desired program to be recorded and enters schedule information using the remote control unit into the recording equipment. This step may consist of several key entries on the remote control units, since for every intended consecutive scheduled recording, the user specifies the time to begin recording as well as the time to terminate recording.

U.S. Patents 5,692,2101014 and 5,988,078 to Levine teach implementations of an electronic schedule stored in memory to allow cursor based programming on a conventional video recorder through use of an associated personal computer. The computer communicates with the video recorder via infrared signals of the type used for remote control of the video recorder. Programming schedule information may be provided to the personal computer from a remote database by telephonic communication, broadcast, or use of disposable memories. A remote transmitter connected to the personal computer is used at the time of the recording to send signals to the video recorder to initiate recording of a preselected program, allowing unattended programming memory of the video recorder to initiate recording of a specific channel at a proper time. The method taught by Levine includes the steps of providing at the viewing location a computerized unit having an operator input and a modem; establishing a connection to a wide area network through the modem; transmitting information to a service provider regarding the geographical location of the particular viewing location; and receiving from the service provider information specific to the type of programming available to the particular viewing location. However, neither of the Levine patents address the problem of trying to operate a video recorder from a remote location.

SUMMARY OF THE INVENTION

The present invention addresses the problems identified above and provides an apparatus, method and service model which simplify conventional methods for schedule

Dropbox Exhibit 1002 - Page 125
Dropbox, Inc. v. Entangled Media, LLC
IPR2024-00285 - U.S. Patent No. 8,484,260

recordings of television programs and enable users to control recording equipment from any location via the Internet. Entities connected to computer networks such as the Internet and web-browser software can schedule recordings of television programs and/or operate the recording equipment. In an example scenario, a user who maintains recording equipment at home may utilize the present invention from his or her workplace or vacation place, accesses a service provider website using her/his user name and password, views the a schedule of television programs provided by a broadcaster or other distributor of programming and selects the television programs to be recorded. The application service provider in turn transmits the selected television program information to a computer connected to a later described remote control unit to execute and operate the recording of selected programs. In this manner, the present invention enables anyone with internet access to remotely operate recording equipment to record television programs.

Another attendant advantage of the present invention is an inexpensive solution to provide global connectivity of the Internet to existing recording equipment. The present invention can be utilized to operate recording equipment such as video cassette recorders, that typically have infrared sensors to receive control commands. Other recording equipment such as DVD recorders, hard drive based video recorders, etc. can also be controlled using the present invention.

BRIEF DESCRIPTION OF THE DRAWINGS

The forgoing aspects and many of the attendant advantages of the present invention will become more readily apparent in the following detailed description and accompanying drawings, wherein:

FIG. 1A is a diagrammatic representation of the computer network utilized by the present

Dropbox Exhibit 1002 - Page 126
Dropbox, Inc. v. Entangled Media, LLC
IPR2024-00285 - U.S. Patent No. 8,484,260

invention;

FIG. 1B is a diagrammatic representation in block form of the system architecture of the present invention;

FIG. 2 illustrates the DNP packet format utilized in the present invention;

FIG. 3 shows a packet sent from a client process to a lab server;

FIG. 4 shows a response packet sent from the lab server 112 to a client process;

FIG. 5 is a flow chart illustrating the logical sequence of steps for the lab server to transmit raw data from physical processes for calculating results based on computational analysis of the raw data;

FIG. 6 is a flow chart illustrating the logical sequence of steps for the lab server to interpret client instructions, execute the commands and generate responses;

FIG. 7 is a flowchart illustrating the basic operation of the connection monitor;

FIG. 8 displays several routing modes that may be performed by the connections server;

FIG. 9 is a flowchart illustrating the basic operation of the connection handler;

FIG. 10 is a flowchart illustrating client DNP packet processing;

FIG. 11 is a diagrammatic representation of a two-dimensional set of DCT components;

FIG. 12 is a flowchart illustrating the logical sequence of steps executed by the server for performing the encoding process;

FIG. 13 is a flowchart illustrating the logical sequence of steps executed by the client process for performing the decoding process;

FIG. 14 illustrates in block diagram form the major components utilized in an alternative embodiment of the present invention;

FIG. 15 illustrates in block diagram form the remote control device of an alternative embodiment present invention;

Dropbox Exhibit 1002 - Page 127
Dropbox, Inc. v. Entangled Media, LLC
IPR2024-00285 - U.S. Patent No. 8,484,260

FIG. 16 illustrates another alternative embodiment of the present invention; and

FIG. 17 illustrates an alternative embodiment of the service model of the present invention.

DETAILED DESCRIPTION

FIG. 1A shows a computer 10 connected via a computer network such as Internet 50 to computer 60 that manipulates devices in a laboratory. Computers 10, 60 may have a conventional design, incorporating a processor chassis utilizing a central processing unit (CPU), various memory and supporting integrated circuitry. Connected to the processor is a keyboard 12 and monitor 16. A user may control the computer 10 using the keyboard 12 or mouse 18 to manipulate a cursor moved about on the screen of the monitor 14 to make selections in programs executed on the computer 10. Floppy drive 20 and hard disk 22 may also be incorporated in the computers 10, 60.

Although a desktop type of computer is illustrated, it is to be understood that other forms of computers, such as workstations, laptops, palm tops, dumb terminals, or any computer capable of communicating with other computers may be used in connection with embodiments of the present invention.

Computers 10, 60 may communicate over the computer network 50 via modem and telephone line. An operating system and browser program may also be included in computers 10, 60 so that a user may access the laboratory. However, other media may also be used, such as a direct connection or high speed data line. The computer network 50, as described above, may be a large and complex system, incorporating a vast number of nodes and components.

Computer 60 is located at a laboratory where physical processes are to be conducted. For illustrative purposes, the operation of a laser and optical equipment is described herein,

Dropbox Exhibit 1002 - Page 128
Dropbox, Inc. v. Entangled Media, LLC
IPR2024-00285 - U.S. Patent No. 8,484,260

but it is to be understood that other types of physical processes may be used in connection with the present invention. An interface 62 is connected to the processor in computer 60 that allows a user to control laser 64. The beam from laser 64 may be directed through various optical equipment 66, which may be adjusted on table 68 by interface 62. In an embodiment of the present invention, interface 62 may use a PCI-GPIB board to control and monitor laser 64. To acquire images of the laser beam that have been processed by optical equipment 66, a CCD detector that transmits digitized images to a IMAQ PCI-1424 board may be used. The optical equipment 66 may be mechanically adjusted and aligned by motorized stages on which the equipment is mounted. To display live pictures of the processes and equipment, an IMAQ PCI-1408 board may be used to digitize the analog video signal from camera 70. Motion of camera 70 may be controlled by a motion control system available through a software application such as LabView, which may be stored and executed on computer 60. Camera 70 is provided with frame grabber 72 to provide video feedback of the physical process, and are controlled by the video server 72, which may be executed on the processor of computer 60. System software on computer 60 may also include IMAQ Vision for G that provides image processing libraries such as a Fast Fourier Transform (FFT) routine to speed up development of live data analysis software.

Directing attention to FIG. 1B, the system architecture 100 integrates hardware and software that facilitate two-way communication between physical processes 110 to on-line users across computer networks. The system can be divided into several processes based on functionality: physical processes 110, lab server 112, connection server 114, clients 118, database server 120. These processes can be implemented as software programs that are executed in computing devices such as computers. As used herein, physical processes 110 are defined as physical, biological and/or chemical processes or phenomena that can be

Dropbox Exhibit 1002 - Page 129
Dropbox, Inc. v. Entangled Media, LLC
IPR2024-00285 - U.S. Patent No. 8,484,260

detected, measured, quantified and/or controlled by electronic devices such as detectors, sensors, motors, power source, etc. to various interfaces such as GPIB, RS-232, PCI, USB, ethernet, etc., the electronic devices that monitor and control the physical processes 110 and communicate with computer 60 that runs the lab server process 112.

Data from the physical processes 110 are collected by the lab server 112 for purposes of storing into the database via the database server 120 and/or distributing to the clients 118 via the connection server 114. Prior to sending data, the lab server 112 can also perform analysis and transformation of the data such as statistics and FFT computation. The lab server 112 also receives data from the clients 118 such as control commands through the connection server 114. After analyzing these commands, the lab server 112 then passes the commands to the electronic devices or equipment (i.e. laser, motors, detectors, etc.). As shown in FIG. 1B, there are multiple physical processes 110, namely physical process 110-1 and physical process 110-12, as well as multiple lab servers 112-1, 112-2.

The connection server 114 serves as the distributor of data that accepts, verifies and routes information from data sources to appropriate destinations. The connection server 114 supports full duplex point-to-point and point-to-multipoints data transmissions between the clients 118, lab server 112, and database server 120. Several transmission modes will be discussed below. Additionally, the connection server 114 also monitors the status of network connections throughout the entire process.

The clients' processes 118 provide user interfaces (UI) for users' input and output functions. The clients' processes 118 are implemented as software programs that can be run on clients' computing devices such as desktop computers. The client also establishes two-way communications with the connection server 114. Data from the connection server 114 are decoded and displayed according to associated formats such as the video, graph, LED

Dropbox Exhibit 1002 - Page 130
Dropbox, Inc. v. Entangled Media, LLC
IPR2024-00285 - U.S. Patent No. 8,484,260

displays, etc.

In a preferred embodiment, communications between the processes above are carried out using a common language, such as Data Network Protocol (DNP). Besides transporting various data types, DNP also carries network and communications related messages between different processes. DNP packet format is also discussed in the later sections.

The lab server 112 may reside at the location of the physical process 110 to have direct local control of the physical process. The lab server 112 is the process that broadcasts data from the physical process 110 and well as control the physical process 110 based on requests from clients 118. The lab server 112 can be implemented as a multi-threaded software that implements communication functions across computer networks such as the internet 116. To provide universal and reliable communications, all data can be transported using standard connection based network protocols such as Transmission Control Protocol/Internet Protocol (TCP/IP). Each connection (in this case between the lab server process 112, connection server process 114, and clients 118) is commonly called socket that consists of a network or IP address and a port number. However, the data itself and other communication messages are encoded in a format called Data Network Protocol (DNP). In the OSI network model, DNP can be considered as an application layer protocol like HTTP and FTP. The unique design of DNP provides a common language between different processes that enables collaborative environments between multiple users across the internet.

DNP is designed to carry various types of digital data such as float, integer, Boolean, video and arrays of data. Data is encoded using DNP into one information entity called a packet that has two main sections: the overhead section 205 and instruction section 225. Directing attention to FIG. 2, the DNP packet format is illustrated. The overhead section 205 may contain the following fixed-size fields:

Dropbox Exhibit 1002 - Page 131
Dropbox, Inc. v. Entangled Media, LLC
IPR2024-00285 - U.S. Patent No. 8,484,260

Packet size 210: the length of the entire packet normally in byte words (8 bits unit).

Destination ID 212: may contain client ID, lab server ID, connection server ID, all-clients-group ID, all-clients-and-lab-server-group ID, or connection server group ID where the packet is sent.

Source ID 214: may contain client ID, lab server ID or connection server ID where the packet is originated.

Instruction number 216: contains the number of instructions following the overhead section 205. For example in FIG. 2, there are N instructions.

The instruction section 225 may contain a number of instructions. Each instruction can be a specific command or request that contains the following fields.

Component ID 230: identification number of specific device/equipment for user interface component.

Command ID 232: identification number of specific command/request to be performed.

Command Value 234: parameter values used to perform the commands or requests. Based on the associated command/request, the data type of common values can vary (i.e. float data, integer data, video data, array of data). Consequently this field has variable size. Both sender and receiver of the request may have a look-up list of data types associated with the component ID's and command ID's. Hence, the data type information need not be carried in the packet itself. The instruction section may be extended to include component ID's, command ID's and command values 252-262. FIG. 3 shows an example packet sent from a client 118 to a lab server 112 that is a request to change the current value of laser equipment to 45.4 mA. In overhead section 305 there is a packet size section 302, a lab server ID section 304 and a client ID section 306. In instruction section 315 there is a laser ID section 320, a change current value section 322 and the target milliamps 45.4 in section 324.

Dropbox Exhibit 1002 - Page 132
Dropbox, Inc. v. Entangled Media, LLC
IPR2024-00285 - U.S. Patent No. 8,484,260

FIG. 4 shows a typical response packet from the lab server 112 to all clients 118 to update two of their user interface components: a graph and message board display with a value of 45.4 and a message in message section 456 which reads, "your command has been successfully performed."

Two main functions may be performed by the lab server: broadcast data from the physical processes 110; and perform clients' requests and general associated responses. To keep clients 118 up to date with the current states of the physical processes 110, the lab server 112 can broadcast information that is directly collected from the physical processes 110. Data from the physical processes 110 that are encoded in the DNP packet are transmitted to connections server 114 for distribution. The connections server can then look at the overhead section of the transmitted DNP packet and forward the packet to appropriate destinations. Details on the routing algorithm in the connections server are discussed below.

Sensors, detectors and other measurement instruments detect and/or measure various physical phenomena (i.e. electric fields, electromagnetic radiation, temperature, pressure, etc.), and send this information to the lab server 112. The lab server 112 that has established network connection to the connections server 114 can then put the received information or its computed analysis into the instruction section of the DNP packet. This process can be repeated if more than one instruction is needed to be sent. Once all the instructions have been written in the instruction section of the DNP packet, the corresponding overhead sections can also be constructed. Once the DNP packet is complete, it can then be sent to the connections server 114.

Directing attention to FIG. 5, the lab server 112 can broadcast the raw data from physical processes 110 for calculating results based on computational analysis of the raw data. In some cases, data from the physical process 110 are analyzed for the purposes of

Dropbox Exhibit 1002 - Page 133
Dropbox, Inc. v. Entangled Media, LLC
IPR2024-00285 - U.S. Patent No. 8,484,260

scientific visualization, statistical analysis or data compression. For example, raw video data from the physical process are analyzed for both spatial and temporal redundancy. After performing a compression algorithm, the compressed format of the video data is written to the instruction section of the DNP packet. Video compression that is suitable for this application is described below. For the clients to receive a continuous update of information the entire process in FIG. 5 can be repeated on a periodic basis. The repetition period of this process can be adjusted according to a particular application. At step 502 the lab server 112 gets data from the physical process 110. Control may proceed to optional step 504, where the lab server 112 performs computational analysis. Control proceeds to step 506 where a look-up data type table is constructed. Control proceeds to step 508 where data is written in the instruction sections of the DNP packet. This may be part of an iterative loop where control returns to step 502. Control may also proceed from step 508 to step 510 where the DNP packet is written to the overhead section. Control continues to step 512 where the DNP packet is sent to the connections server 114.

Another function of the lab server 112 is to process clients' requests and generate associated responses. The lab server 112 can receive a DNP packet from the connections server 114 that contains the clients' requests for instructions. It is the responsibility of the lab server 112 to interpret these instructions, execute the commands and generate responses. This process is described in FIG. 6. Control begins at step 520 where the lab server 112 waits for the DNP packet to be received from the connections server 114. Proceeding to step 522, the overhead section of the DNP packet is read. Control continues to step 524, where one instruction in the instructions section of the DNP packet is read. Control proceeds to step 526, where the lab server 112 executes the request/instruction by calling equipment/instruction drivers. Control proceeds to step 528, where the lab server 112 writes

Dropbox Exhibit 1002 - Page 134
Dropbox, Inc. v. Entangled Media, LLC
IPR2024-00285 - U.S. Patent No. 8,484,260

response data in the instruction section of the DNP packet. From step 528, control may return to step 524 in an iterative loop according to the number of instructions; control may also proceed to step 530, where the DNP packet is written to the overhead section. Control proceeds to step 532, where a response DNP packet is sent to the connections server 114.

Execution of a client's requests may involve calling particular software drivers that send the commands to instruments via the associated computer interface such as GPIB, RS-232, USB, ethernet, etc. The request may also contain instructions for information management such as recording the client's request, storing collected values from instruments, and querying previously collected information. In the case of information management, the lab server 112 can interact directly with local or remote database servers through standard database drivers such as ODBC or JDCB.

Unlike the broadcasting functions that may continuously send DNP packets to clients, this function of the lab server 112 only generates responses when client requests are received. When the lab server 112 is implemented in a software program, this function may be run in a separate thread for parallel processing with other functions.

The connections server 114 can be run in the same computer where the lab server 112 resides. For additional reliability, in the preferred embodiment the connections server 114 may be executed in a separate computer. The connections server 114 may be implemented using object oriented, network-enable and multi-threaded software development environments such as JAVA or C++. Two of the main functions performed by the connections server 114 include: monitoring and maintaining reliable network connections with all active clients and lab servers; and routing DNP packets to appropriate destinations.

The connections server 114 maintains network connections with all the processes, namely: lab server 112, database server 120, and clients 118. A connection handler, which

Dropbox Exhibit 1002 - Page 135
Dropbox, Inc. v. Entangled Media, LLC
IPR2024-00285 - U.S. Patent No. 8,484,260

may be a class or object in object-oriented programming terminology, can perform readings from and writing to each of the connections. Each connection handler should be run in a separate thread for parallel processing. Once the connections server 114 accepts or establishes a connection, it can then pass the connection information (i.e. the socket information that contains remote post address and remote port number) to the connection handler for further processing. The connections server 114 maintains an array or table of connection handlers, namely the connection table, to perform and monitor network related processes. A connection monitor is another important process included in the connections server 114 that runs on a periodic basis. The connection monitor may be implemented as a subclass of the connections server 114 and may be executed in a separate thread. A function of the connection monitor is to monitor and control the network communications of the processes (i.e. clients 118 and lab server 112) connected to the connections server.

FIG. 7 illustrates the basic operation of the connection monitor. Beginning at step 550, the connection monitor searches for clients in the connection table. Proceeding to decision step 552, if a client is found in the connection table, control proceeds to step 554 where the connection monitor checks the validity of the current session. This operation is normally done by consulting the database server 120 to check whether the current clients have access to the physical process 110. If a client is not found, control proceeds from decision step 552 to 556, where the connection monitor instructs all connection handlers to close their connections. Returning to step 554, control proceeds to decision step 558. If the session is valid, control proceeds to step 560; otherwise control returns to step 556. At step 560, the connection monitor searches for a lab server 112 in the connection table. Control proceeds to decision step 562, where, if a lab server is found, the program terminates. Otherwise, control proceeds to step 564, where the connection monitor establishes a

Dropbox Exhibit 1002 - Page 136
Dropbox, Inc. v. Entangled Media, LLC
IPR2024-00285 - U.S. Patent No. 8,484,260

connection with a lab server 112. As shown in FIG. 7, the operation of checking whether a lab server 112 is connected is performed in a loop, since there may be more than one lab server 112 contacted for backup purposes. If a failure in the system or device at the physical process 110 occurs, the lab server 112 that is physically connected to the physical process 110 would refuse any connection requests from the connection server. Thus, the connection monitor attempts to establish connection with another lab server 112. The entire operation in FIG. 7 should be performed periodically to continuously monitor the communication process.

The connections server serves as the distributor of data that accepts, verifies and routs DNP packets to appropriate destinations. The connections server supports full duplex point-to-point and point-to-multipoints data transmissions based on the destination ID field of the DNP packet. As a result, both clients 118 and lab server 112 processes may synchronously receive events that are generated by any processes. FIG. 8 displays several routing modes that may be performed by the connections server. FIG. 8 is an example case of three clients and a lab server connected to the connections server. The maximum number of clients that may be served varies according to the available network bandwidth.

As discussed above, the connection handler is part of the connections server and may perform reading from and writing to each connection. The connections server 114 listens to any connection request, and passes the network information to the connection handler once a valid connection is established. FIG. 9 shows the flow diagram of the connection handler. Beginning at step 600, the connection handler receives network information from an accepted connection from the connections server. Control proceeds to step 602, where the connection handler checks to see if the connection is valid. If the connection is not valid (decision step 604), control proceeds to step 606, where the connection handler closes the connection and control terminates. However, if the connection is valid, control proceeds to step 608, where

Dropbox Exhibit 1002 - Page 137
Dropbox, Inc. v. Entangled Media, LLC
IPR2024-00285 - U.S. Patent No. 8,484,260

the connection handler waits and listens for incoming DNP packets for a certain time-out period. From step 608, control proceeds to decision step 610. At decision step 610, if a DNP packet is received before the time-out, control proceeds to step 612, where the overhead section of the DNP packet is read. However, if a DNP packet is not received before the time-out, control returns to step 602. From step 612, control proceeds to step 614, where again the connection handler attempts to validate the connection. If the connection is not valid (decision step 616), control returns to step 606. However, if the connection is valid, control proceeds to step 618, where the rest of the DNP packet is read according to its packet length. Control then proceeds to step 620, where connection handlers in the connection table are found based on the destination ID in the DNP overhead section. Control then proceeds to step 622, where all DNP packets are sent to all destinations via the connection handlers found in the connection table. From step 622 control returns to step 602. The operations described above are repeated until the connection is no longer valid.

Client processes provide a graphical user interface for the end users of the physical process 110. The clients may be implemented in any object-oriented and network-enabled software development environment such as C++ or JAVA. The client should contain graphical components that may be used for getting user inputs and/or display information. Some of the components may include dials, graphs, switches, LED displays, buttons, etc.

The client process 118 may be executed from any computer that is connected to a TCP/IP network such as the internet. When the client process is run, it will first attempt to establish network connections to the connections server 114. User requests/commands that are received from the UI components are encoded into DNP packets to be sent to the connections server 114. The client 118 may also process DNP packets from other remote clients and lab servers 112 that are received via the connections server 114. This operation

Dropbox Exhibit 1002 - Page 138
Dropbox, Inc. v. Entangled Media, LLC
IPR2024-00285 - U.S. Patent No. 8,484,260

may also be executed in a separate thread for parallel processing.

FIG. 10 is a flow diagram of a client DNP packet processing. The client process 118 normally executes the instructions in a DNP packet by calling functions or methods of its UI components. The instructions may involve updating the graph display, turning a dial, decoding and displaying video data, etc. By receiving live events from physical processes 110 and other client processes, the user may experience an interactive and collaborative environment in controlling remote physical processes. Beginning at step 624, the client waits for DNP packets from the connections server 114. Control then proceeds to step 626, where the DNP packet's overhead section is read. Control then proceeds to step 628, where one instruction in the instruction section of the DNP packet is read. Control then proceeds to step 629, where the request/instruction is executed by calling the functions of the user interface components. From step 629, control may return to step 628 in a loop that repeats according to the number of instructions.

The database server 120 manages a database containing information that is essential to the operation of other processes. The remote operation of the database server 120 can be facilitated using database application programming interface standards such as ODDC or JDDC. The database server 120 manages the following list of information: user information, user physical process data, scheduling information, and event data.

The database server 120 manages user profiles. A user profile contains user accessed information such as log-in name and password that enables the connections server 114 to verify connection requests from the clients 118. In addition, the user profile also includes the client's progress information by tracking the status of accomplished actions/requests. Data from the physical processes 118 (i.e. sensor readings, states of equipment, etc.) may also be recorded on behalf of a client's request. This data be time stamped and may be made

Dropbox Exhibit 1002 - Page 139
Dropbox, Inc. v. Entangled Media, LLC
IPR2024-00285 - U.S. Patent No. 8,484,260

available to the user via an interactive "laboratory notebook" user interface. Using a common gateway interface (CGI) or JAVA servlet program that may interact with the database server 120, clients may search and retrieve previously recorded physical process data. The search may be based on chronological order, keyword, or other characteristics of the recorded data. Scheduling information ensures that only the appropriate clients are given access to the physical processes 110 in a certain time period. Every event received by the lab server may also be automatically recorded. This data may be used to analyze clients' behavior and usage patterns in controlling the physical process 110. The interactive laboratory notebook may also contain lab parameters, "to do" lists, and personal notes.

The interactive laboratory notebook is part of a user interface that may be constructed using Interface Builder or similar software application, and may be accessed by users during the course of an experiment. The interactive laboratory notebook may be implemented to include a database stored on a hard disk or other nonvolatile memory of computer 60, as well as a user interface to access the database. Where the present invention is utilized for distance learning, the interactive laboratory notebook provides a central repository for information and is an essential tool for instructors to evaluate the progress and performance of students using the online laboratory.

The user interface may include animated switches, dials, buttons, and LED displays rather than traditional browser forms. Online graphing of the real time data along with other customized user interface components allows users to experience a hands-on look and feel. The user interface may closely resemble the front panels of the actual instruments in functionality, layout, and appearance. The live video stream may also be included in the user interface.

Dropbox Exhibit 1002 - Page 140
Dropbox, Inc. v. Entangled Media, LLC
IPR2024-00285 - U.S. Patent No. 8,484,260

Real Time Video Observation

Observing physical processes in real time via the internet is a key feature of the present invention. Returning to FIG. 1B, video camera 70 is used to acquire live images from a system that the user interacts with and whose actions affect the observed video. Video capture (or frame grabber) hardware 72 is used on a computer to capture images desired to be sent to the user with minimum latency. A video server computer 74 compresses new image data and forms packets to be transmitted to the user (client) through the computer network 50. The client, using a standard browser, is able to view the live video and interact with the system. In order to transmit video via the internet in real time, spatial and temporal compression is performed. In spatial compression, the acquired image from frame grabber 72 is represented as gray-scale or as a color image in terms of hue, saturation, and value (HSV). In both cases values are represented as integers. The image data is divided into square blocks (8x8 pixels or 16x16 pixels, for example). A two-dimensional discrete cosine transform (a standard mathematical operation often abbreviated as DCT) is performed on each block.

To perform temporal compression, the server 74 subtracts the ideal DCT data from the DCT data that the client currently holds. This difference in DCT data is the information that the client must receive in order to allow its video to be updated to the desired image. This compression uses a single new frame to calculate data to be sent. This sacrifices compression efficiency (i.e. that obtained using the MPEG4 standard) in order to minimize latency. An approximation to this difference is calculated which meets the requirements of the specified fixed packet size (specified in bits). By basing compression on a specified packet size, compressed video matches transmission limitations of the client 110. The data rate (PACKET_SIZE * PACKETS_PER_SECOND) that is used for a particular client is dynamically determined and updated as video is sent. This allows the quality of video that is

Dropbox Exhibit 1002 - Page 141
Dropbox, Inc. v. Entangled Media, LLC
IPR2024-00285 - U.S. Patent No. 8,484,260

sent to a client to vary according to the abilities of each client's internet connection. This also allows the data rate to vary in response to changes in a client's allowable data rate. By having the client intermittently inform the server of the times that it received transmitted packets, the latency and allowable data rate of the client may be calculated.

FIG. 11 shows the two-dimensional set of DCT components. Component 0 is in the upper left corner, and the path of the arrow shows the order that each component is enumerated. DCT components are transmitted in groups of components (i.e. eight groups of eight components). Not all groups of DCT components are transmitted in a single packet. Groups of "difference in DCT data" are chosen to be sent based on the magnitude of the components in the group. In eight SV images, the eye is more sensitive to differences in value than to differences in hue or saturation. Thus a relative weight is used in comparing the magnitudes of groups or of a different type. Data is transmitted with rounding in order to use fewer bits to transmit an approximation of the data. The video compression system has been optimized to minimize response time (latency). This priority is unique for a system that depends on the user promptly receiving video feedback in response to his actions.

FIG. 12 illustrates the encoding process performed by the server 74. Beginning at step 630, the current DCT data for the client is initialized to zero. Control proceeds to step 632, where, if this is the first packet being transmitted, then initialization information is placed at the beginning of the packet. This initialization information includes: width of display, height of display and type of display (gray-scale or HSV). Control proceeds to step 634, where an image is acquired using video camera 70 and frame grabber 72. At step 636, image data is divided into square blocks (8x8 pixels or 16x16 pixels). At step 638 a two-dimensional discrete cosine transform is performed on each block. This produces the ideal DCT data which corresponds to an image with minimal error. At step 640, the difference

Dropbox Exhibit 1002 - Page 142
Dropbox, Inc. v. Entangled Media, LLC
IPR2024-00285 - U.S. Patent No. 8,484,260

between ideal DCT data and the DCT data that the client is currently using is calculated. This produces "difference in DCT data". At step 642 groups of "difference in DCT data" are chosen to be sent based on the magnitude of the components in the group. In HSV images, the eye is more sensitive to differences in value than to differences in hue or saturation. Thus a relative weight is used in comparing the magnitudes of groups that are of a different type. At step 644 an approximation to the data in these groups is stored in a packet which is then transmitted over the network through a socket connection with the client. Control proceeds to step 648, where the "approximated difference in DCT data" that the client will decode is then calculated by the server 74. At step 650, this difference is then added to the client's DCT data that the server 74 keeps a record of. By keeping track of the client's current data, the error caused by approximation does not propagate as multiple transmissions are sent. Control may then return to step 632 in order to produce another packet to be sent to the client.

FIG. 13 illustrates the structure of the decoding process performed by the client. Beginning at step 652, the current DCT data is initialized to zero. At step 654 a socket connection is used to receive a packet from the server 74. At step 656, if this is the first packet received, initialization information is processed. This initialization information includes: width of display, height of display and type of display (gray-scale or HSV). At step 658, the packet is decoded to produce the approximated difference in DCT data. At step 660, by adding this difference back to the current DCT data, the updated value for the current DCT data is determined. Control proceeds to step 662, where the inverse discrete cosine transform is then used to convert DCT data into image data. This transformation is only performed on blocks that have been modified by the approximated difference in DCT data. This allows the image data to be updated with no buffering, and thus the delay in updating the image is minimized. Control proceeds to step 664, where the image date is displayed to the

Dropbox Exhibit 1002 - Page 143
Dropbox, Inc. v. Entangled Media, LLC
IPR2024-00285 - U.S. Patent No. 8,484,260

user through a standard browser. Control may then return to step 654 in order to process an additional updated image sent from the server 74.

The instructions described above as well as the user interface and interactive laboratory notebook may be implemented in software and stored in the computer 60 and executed in accordance with the preferred embodiment of the present invention.

While the description above explains the operation of a laser and optical equipment, it is to be understood that a wide variety of physical processes may be performed using the present invention, and other forms of data may be recorded such as time, temperature, voltage, current, magnetic field, electromagnetic radiation, and the like. Additional applications of the present invention may extend to entertainment, for example the remote control of toys in an interactive setting, where multiple users may access computer 60 via the computer network 50 and play games involving multiple users. The real time video taught by the present invention is an integral part of such an application.

In other applications of the present invention, computer 60 and camera 70 may be utilized as a sales or development tool to demonstrate equipment or processes to prospective clients, customers, or developers by providing a demonstration of the equipment or processes in real time and eliminating the expenditure of resources required to travel to a location where the equipment or processes are located.

In embodiments of the present invention where video recording is to be performed in accordance with the present invention, two types of equipment are needed to record audio and video signals transmitted from a programming source: a tuning device capable of tuning/separating television channel among designated frequency bands, and a recording device capable of storing analog video/audio signal on recording media such as magnetic tapes, magnetic disks or optical disks. Many recording devices such as VCRs are equipped

Dropbox Exhibit 1002 - Page 144
Dropbox, Inc. v. Entangled Media, LLC
IPR2024-00285 - U.S. Patent No. 8,484,260

with built-in television tuners. In this case, the process of recording television programs can be accomplished by manipulating a single piece of equipment. For recording devices that do not have built-in television tuners, broadcast television signal must be processed by tuning a particular television channel and converting such channel into video and audio signal prior to recording. In this case, the process of recording television programs can be accomplished by manipulating both television receiver 1010 and recording device 1012. Most television receivers are equipped with a built-in tuner, however in some cases a set-top box 1014 such as cable box or satellite receiver is used instead of a conventional tuner not only to tune television channels but also to decode paid programs such as premium channels, pay-per-view channels, etc. Programming is broadcast by a programming provider 1028.

TV receiver 1010, recording device 1012 and set-top box 1014 are often equipped with infrared sensors that allow remote control from infrared transmitting devices operated within effective distance. Most remote control units emit infrared signal with a certain modulation method and carrier frequency to transmit digital commands for operating such devices. The methods used to demodulate such infrared signals vary by manufacturer. Many equipment manufacturers use conventional digital modulation methods such as on-off shift keying, pulse length modulation, etc. with carrier frequencies ranging from 20-60 kHz. By using a diode detector, such signals can be learned and stored in a conventional memory. Video/audio recording equipment is controlled by transmitting a sequence of stored commands using infrared emitting diode 1016 in the remote control unit 1018. FIG. 15 shows the preferred embodiment of remote control unit used in the present invention. The remote control unit 18 is connected to a computer 1020 via standard I/O connection 1022 such as RS-232, USB, etc. Computer 1020 is a conventional computer such as a workstation, desktop or laptop personal computer, or personal digital assistant (PDA), which includes a

Dropbox Exhibit 1002 - Page 145
Dropbox, Inc. v. Entangled Media, LLC
IPR2024-00285 - U.S. Patent No. 8,484,260

microprocessor and supporting circuitry, memory, and communications circuitry. Remote control unit 1018 includes a microprocessor 1024 and circuitry to control infrared diode 1016 to emit infrared commands that are stored in memory 1026. The microprocessor can control the transmission of such commands to emulate a particular sequence of commands to record TV programs that is conventionally performed by users operating the recording equipment 1012. Using the computer connection 1022, the microprocessor 1024 also executes the process of downloading information pertaining to user selections to be recorded. Such information may include start time, end time and channel number of selected television programs can be stored in memory 1026. Furthermore, the remote control unit may contain an internal clock 1030. Microprocessor 1024 can monitor and check the selected television programs stored in memory 1026 with the clock 1030 to start and stop the recording process.

In an alternative embodiment of the remote control unit 1018, the clock 1030 and/or memory 1026 can be excluded. In this case, the transmission of infrared signal from remote control unit 1018 is controlled using microprocessor, memory and clock of computer 1020. In this alternative embodiment the remote control unit 1018 and computer 1020 stay connected during the process of recording television programs.

In another alternative embodiment of the present invention, means for controlling the recording device 1012 and accessing an online-based application service provider 1032 can be built internal to the recording device 1012. In this case, recording device 1012 incorporates microprocessor 1024, memory 1026, clock 1030, modem 1034 and client software 1038 can be controlled through electronics means without any external device such as the remote control unit and computer.

Computer 1020 can include an application program such as Client Software 1038 executed by computer 1020 to receive user-selected TV scheduling information from the

Dropbox Exhibit 1002 - Page 146
Dropbox, Inc. v. Entangled Media, LLC
IPR2024-00285 - U.S. Patent No. 8,484,260

Application Service Provider 1032 and transmit such information to remote control unit 1018. As shown in Fig. 1, Computer 1020 is connected to a computer network 1040 such as a wide area network or public, global network such as the Internet. Computer 1020 also includes a modem or network interface unit to facilitate communication via network 1040. During start-up, Client Software 1038 establishes an IP (Internet Protocol) based network connection to the Control Server 1042 located at the Application Service Provider 1032 site. It is recommended that Transmission Control Protocol (TCP) is used to implement such a network connection due to its reliability and connection-based properties. During initialization of the network connection, the Client Software also transmits authentication information such as user id and/or password to allow the Control Server 1042 to identify and verify the designated user account stored in the database 1044. Once the Control Server 1042 has authenticated and verified the connection request, it checks the user account in the database 1044 for the selected TV programs to be transmitted to the Client Software 1038. Control Server 1042 may indicate the state of network connection to the Client Software 1038 or record the status in the database 1044. The Information Server 1050 can receive new television information updates over the Internet. The Information Server 1050 searches the database 44 to find an appropriate Control Server 1042 that maintains a valid connection with a Client Software 38, and instructs the Control Server 1042 to transmit such information to the Client Software 38. After the initialization of the network connection, the Client Software 38 waits for information updates of user selections transmitted by the Control Server 1042. Whenever the information updates are received from the Control Server 1042, the Client Software 38 transmits such information to the remote control unit 18 to be stored in the memory 26. Once the selected television programs are stored in the memory 26 of the remote control unit 18, the microprocessor 24 then compares the selected television programs

Dropbox Exhibit 1002 - Page 147
Dropbox, Inc. v. Entangled Media, LLC
IPR2024-00285 - U.S. Patent No. 8,484,260

with the clock 30 to start and stop the recording process. A certain time delay may also be added before the start of the recording to skip preliminary section of the program. By connecting remote control unit 18 with a computer 20 that executes the Client Software 38, audio/video recording equipment can be operated from a wide area network such as the Internet.

In the case where there is no line of sight between the remote control unit and the recording equipment, such as the case where computer 20 and remote control device 18 are located in different rooms, communication between the remote control unit and a computer can be performed using radio frequency (RF) transmitter 21 and receiver 23, as shown in Fig. 3.

Commands in the form of digital information can be encoded and modulated using RF frequency, which in turn is received and decoded by an RF receiver to be passed to the remote control unit 18 for controlling the audio/video recording equipment. A physical connection between the controlling computer (Computer 2) to either remote control unit 18 (Fig. 1) or RF transmitter (Fig. 3) may be facilitated using standard computer I/O connection such as RS-232, USB, and the like.

INTERNET-BASED SERVICE MODEL

The goals of the service model of the present invention proposed system are to simplify the process of recording TV programs using existing audio/video recording equipment through an Internet-based user interface. Using standard web browser programs such as. Netscape Navigator or Microsoft Internet Explorer, users can browse, search and select television programs to be recorded. In turn, the system will automatically obtain information about the selected television programs (such as start times, end times and channel

Dropbox Exhibit 1002 - Page 148
Dropbox, Inc. v. Entangled Media, LLC
IPR2024-00285 - U.S. Patent No. 8,484,260

numbers), and send such information to the remote control unit 18 that operates the audio/video recording equipment.

Another goal of the service model of the present invention is to provide global access to audio/video equipment. Users can operate audio/video equipment from virtually anywhere through the Internet.

Yet another goal of the service model is to guide users in selecting TV programs by providing suggestions based on analysis of user preferences and viewing history.

In the preferred embodiment of the invention as shown in Fig. 1, a user operates computer 36 to access the Internet-based Application service provider 32. Computer 36 is a device that has a central processing unit, memory and communication means to access a wide area network such as the Internet. Computer 36 can be in the form of desktop, lap top or palm top devices that have the appropriate web browser software 48 installed in their memories. For widest access and compatibility, it is recommended that both Computer 36 and Information Server 1050 use a standard and widely adopted network protocol such as TCP/IP. In the preferred embodiment, the HTTP protocol is chosen to facilitate network communication between Computer 36 and Information Server 1050. In the preferred embodiment, Information Server 1050 is an HTTP compliant server and Computer 36 is a conventional computer with a standard web-browser software such as Netscape Navigator or Microsoft Internet Explorer. Although Computer 36 and Computer 20 are two separate computers 20, 36 as shown in FIG. 1, it is important to realize that the two functions served by Computers 20,36 can be accomplished by a single computer having same components as both Computer 20, 36. The embodiment in FIG. 14 highlights the feature in which the recording equipment can be globally accessed and controlled over the Internet.

Database 44 is connected to the Information Server 1050, facilitated by workstation or

Dropbox Exhibit 1002 - Page 149
Dropbox, Inc. v. Entangled Media, LLC
IPR2024-00285 - U.S. Patent No. 8,484,260

Local Area Network at the Application Service Provider 32 site. The database 44 may serve as a data center to manage information regarding user accounts, television schedule information, and operation of the system. New users are required to register with the Application Service Provider 32. Using HTML forms, a user from Computer 36 can submit registration data to be processed by the Information Server 1050. Information provided by the user for proper operation of recording equipments includes the authentication information, equipment and connectivity identification, and programming source. Other information about the user such as email, telephone and/or fax may also be stored in the user account, hence the user may receive information such as selected television programs, reminders and other information regarding television program recordings via email, telephone and/or fax.

Upon receiving the above registration information from a user, the Information Server 1050 stores the registration information in the database 44 on behalf of the user in her/his individual user account. Once the registration process is complete, the user then selects television programs to be recorded. The Information Server 1050 serves HTML pages containing textual and graphical information regarding TV programming schedules stored in the database 44. To serve the HTML-pages, the Information Server 1050 executes computer programs in the forms of Java Servlet or Common Gateway Interface (CGI) to search the database and display television programming schedules. A user can view and select television programming schedules that are displayed based on her/his preferences such as: viewing dates, topics, actors, show genres, reviews, etc. The Information Server 1050 formats the retrieved television information into HTML pages that allow users to select TV programs to be recorded. The television schedule information may be displayed in spreadsheet forms having the axes time versus channels. For devices that only have a single

Dropbox Exhibit 1002 - Page 150
Dropbox, Inc. v. Entangled Media, LLC
IPR2024-00285 - U.S. Patent No. 8,484,260

television tuner, a spreadsheet user interface may be used in the following applications.

Whenever a user select a valid or non-conflicting television program, the interface disables the selection options for all conflicting television programs that are broadcast during the same time period. This method forces the user to deselect the current selection in order to select another program in the same scheduled time period. Whenever a user select a television program, the interface deselects all selected television programs that have conflicting viewing schedules.

Once the user submits his/her television program selections to the Information Server 1050, the information is stored in her/his account in the database 44. Also stored in his/her account is information regarding the status of network connection between the Client Software 38 and Control Server 1042. Whenever a Client Software 38 establishes or terminates network connection with the Control Server 1042, the events are noted in the user account to track the status of the network connection. Upon receiving the user selections, Information Server 1050 accesses the user-account to check whether a valid network connection has been established between the Client Software 38 and Control Server 1042. If a valid connection is found, the Information Server 1050 notifies the appropriate Control Server 1042 via Local Area Network that new user selections have been received and stored in the database 44 on behalf of the user. Upon receiving the notification from the Information Server 1050, the Control Server 1042 may also access the database 44 via Local Area Network to retrieve user-selected television information that has not been transmitted to Client Software 38. The Control Server 1042 then formats the retrieved information and transmits it to Client Software 38. Upon receiving the user selections, the Client Software 38 sends them to the remote control unit 18 and updates the television recording schedule information in the memory 26. Once the user selections are stored in the memory 26 of the

Dropbox Exhibit 1002 - Page 151
Dropbox, Inc. v. Entangled Media, LLC
IPR2024-00285 - U.S. Patent No. 8,484,260

remote control unit 18, the microprocessor 24 can then compare the selected television programs with the clock 30 to start and stop the recording process.

In the preferred embodiment, Control Server 1042 is an application program executed in a conventional computer that is capable of establishing network communication with other computers using standard network protocol such as the Internet Protocol (IP). Client Software 38 executed in Computer 20 as shown in FIG. 14 can establish a persistent network connection with the Control Server 1042 through TCP-IP protocol. The Control Server 1042 is connected to the database 44 to retrieve user-selected TV program scheduling information. In the proposed system, there are at least two ways for the Control Server 1042 to initiate the process of retrieving from the database 44 the user-selected television program information and sending the information to Client Software 38.

Initiation may be based on notification from the Information Server 1050. When Information Server 1050 obtains user-specified television scheduling information to be recorded, it notifies the Control Server 1042. In turn, if network communication has been established between the Control Server 1042 and Client Software 1038, the Control Server 1042 retrieves the user selections and sends them to the Client Software 1038.

Alternatively, initiation may be based on notification from Client Software 1038. The Client Software 1038 notifies the Control Server 1042 to transmit user selections for recording. This notification would normally be sent when the Client Software 1038 initially establishes network connection with the Control Server 1042. The Control Server 1042 then retrieves user selections and sends them to Client Software 1038.

Information indicating user selections is stored in the database 1044. Such information can convey user preferences, useful in providing targeted advertising, rating of television programs, providing television program guides, suggestions, etc.

Dropbox Exhibit 1002 - Page 152
Dropbox, Inc. v. Entangled Media, LLC
IPR2024-00285 - U.S. Patent No. 8,484,260

Directing attention to Fig. 4, in an alternative embodiment, service provider 1060 can maintain recording equipment at various physical locations 1062-1, 1062-2, ...1062-n, where n can be any number. Users can contact the service provider 1060's website and select programs for recording at the various physical locations 1062. Operating the recording equipment at the locations 1062 as explained above, the service provider can provide localized recordings to its users, either by transmitting audio and video over the computer network 1040 to computers 1036, 1020, or sending the user a copy of the recording on a portable storage medium such as optical or magnetic storage.

While an apparatus, method, and service model for the remote control of recording devices via a computer network have been described in preferred embodiments, those of ordinary skill in the art will understand that many modifications maybe made thereto without changing the scope of the claims that follow. Accordingly, it is not intended that the scope of the invention in any way be limited by the above description, but instead be determined by reference to the claims that follow.

Dropbox Exhibit 1002 - Page 153
Dropbox, Inc. v. Entangled Media, LLC
IPR2024-00285 - U.S. Patent No. 8,484,260

CLAIMS

What is claimed is:

1. An apparatus to remotely operate recording equipment to record television programs using a public wide area network such as the Internet comprising:

(a) recording equipment, said recording equipment including a controlling means for directing the recording of television programs;

(b) means for storing data associated with control signals;

(c) means for receiving information associated with programs selected by a user; for recording, said information transmitted over a computer network; and

(d) means for transmitting said data associated with control signals over said computer network to control said recording equipment.

Dropbox Exhibit 1002 - Page 154
Dropbox, Inc. v. Entangled Media, LLC
IPR2024-00285 - U.S. Patent No. 8,484,260

SUBSTITUTE SHEET (RULE 26)

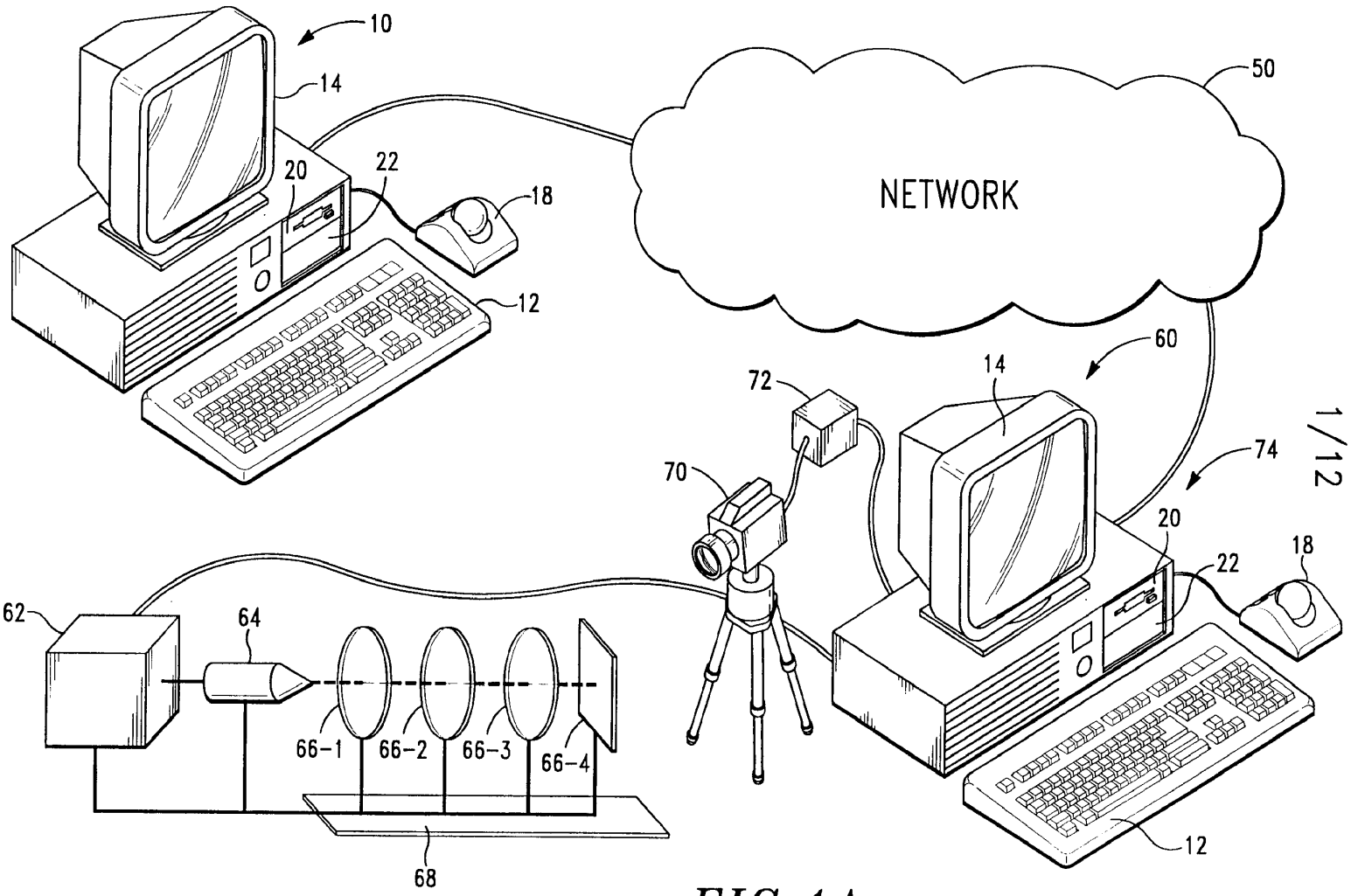

FIG. 1A

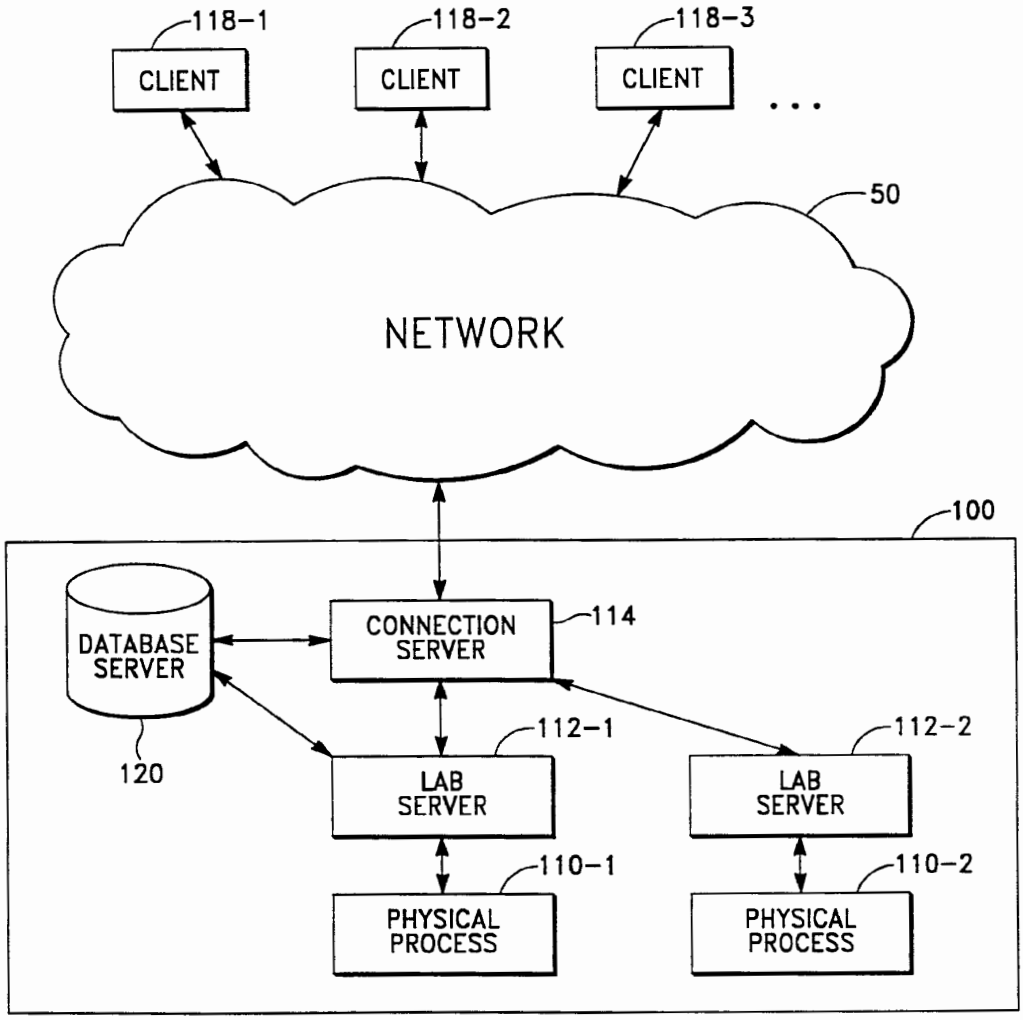

FIG. 1B

Dropbox Exhibit 1002 - Page 156
Dropbox, Inc. v. Entangled Media, LLC
IPR2024-00285 - U.S. Patent No. 8,484,260

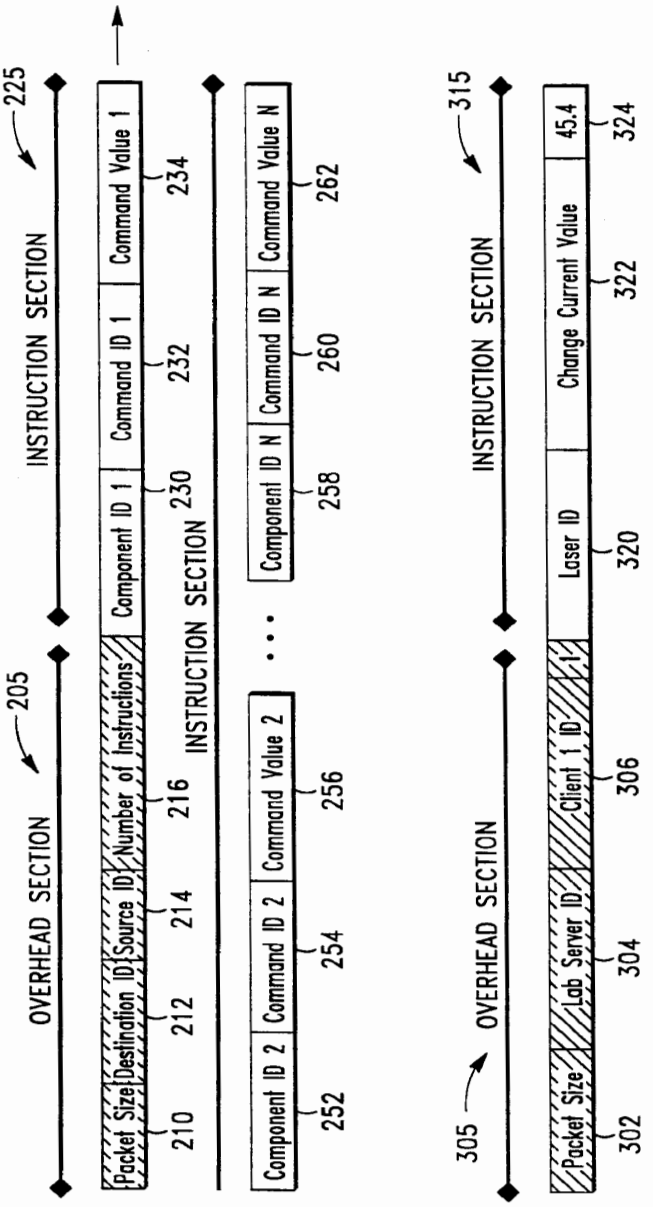

FIG. 2

FIG. 3

Dropbox Exhibit 1002 - Page 157
Dropbox, Inc. v. Entangled Media, LLC
IPR2024-00285 - U.S. Patent No. 8,484,260

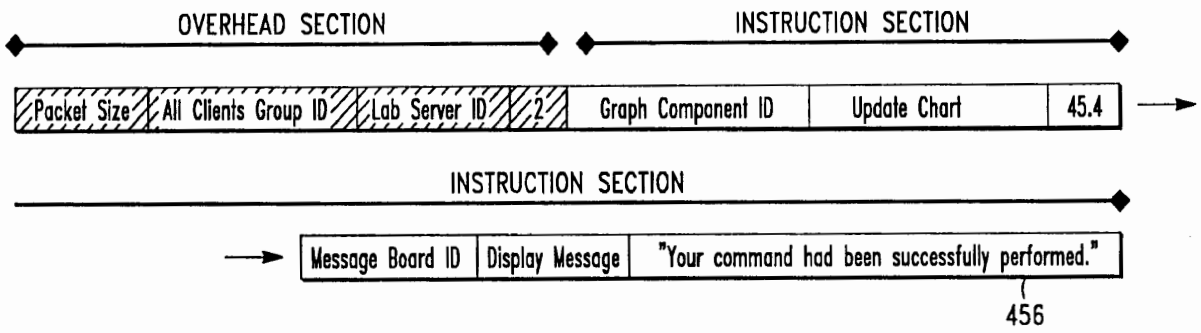

FIG.4

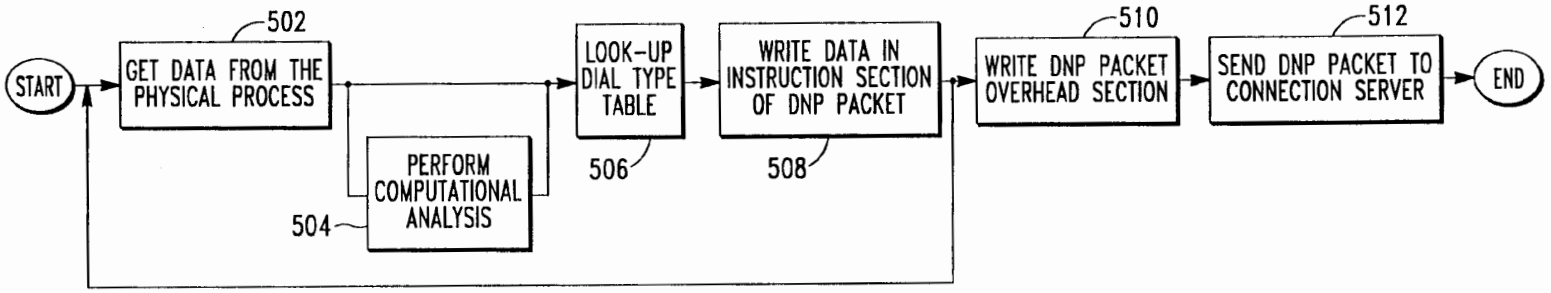

FIG.5

SUBSTITUTE SHEET (RULE 26)

Dropbox Exhibit 1002 - Page 158
Dropbox, Inc. v. Entangled Media, LLC
IPR2024-00285 - U.S. Patent No. 8,484,260

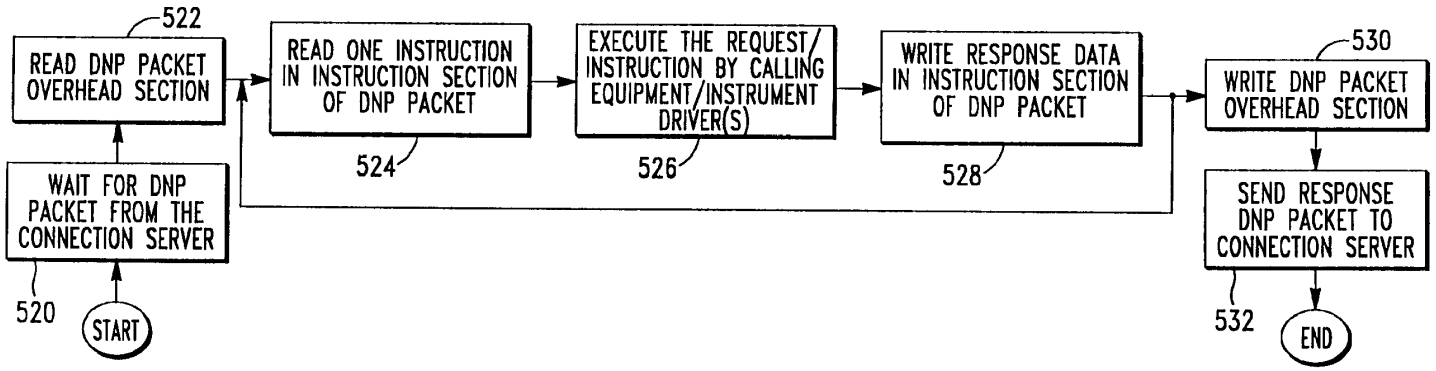

FIG.6

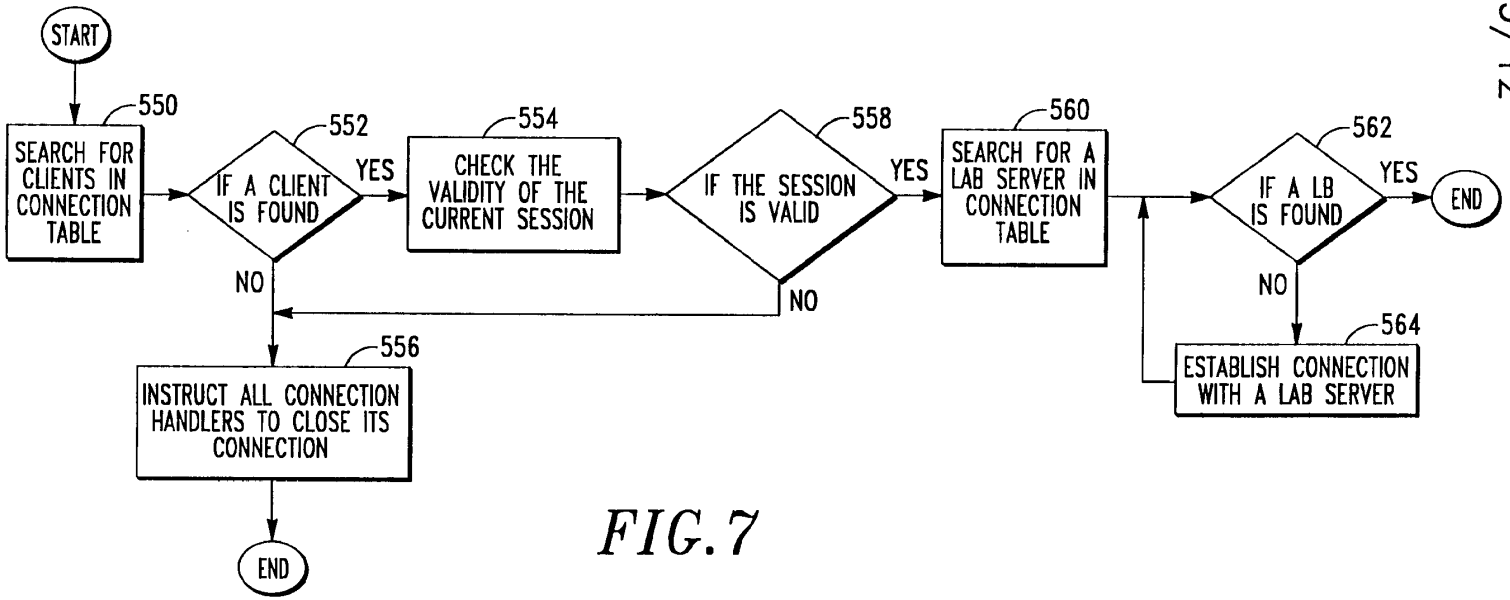

FIG.7

SUBSTITUTE SHEET (RULE 26)

Dropbox Exhibit 1002 - Page 159
Dropbox, Inc. v. Entangled Media, LLC
IPR2024-00285 - U.S. Patent No. 8,484,260

SUBSTITUTE SHEET (RULE 26)

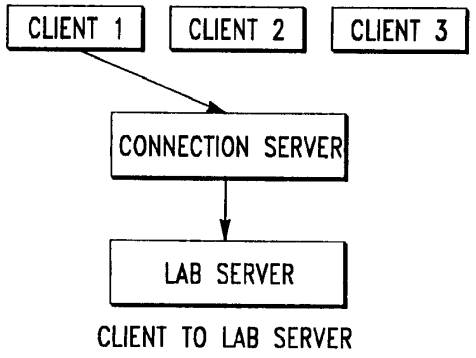

FIG.8A

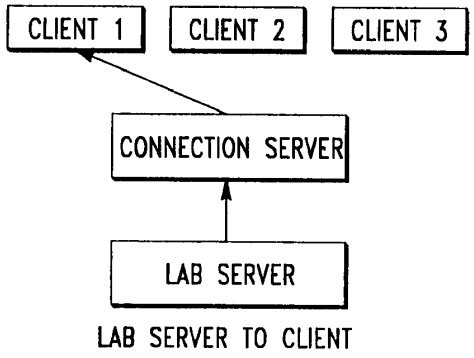

FIG.8B

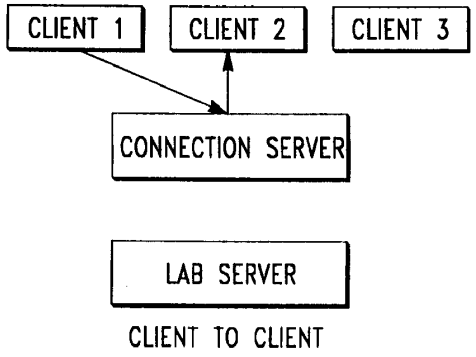

FIG.8C

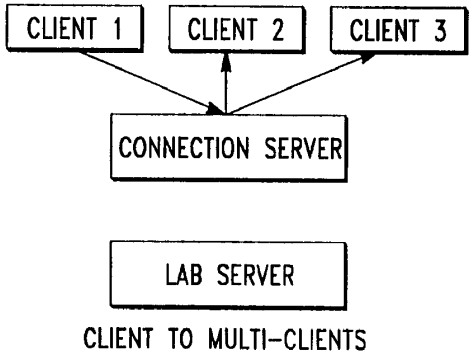

FIG.8D

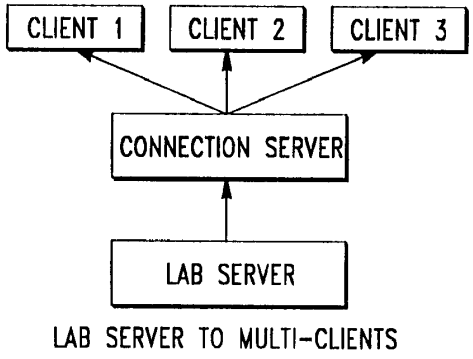

FIG.8E

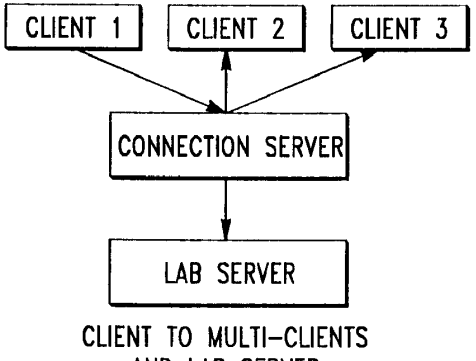

FIG.8F

Dropbox Exhibit 1002 - Page 160
Dropbox, Inc. v. Entangled Media, LLC
IPR2024-00285 - U.S. Patent No. 8,484,260

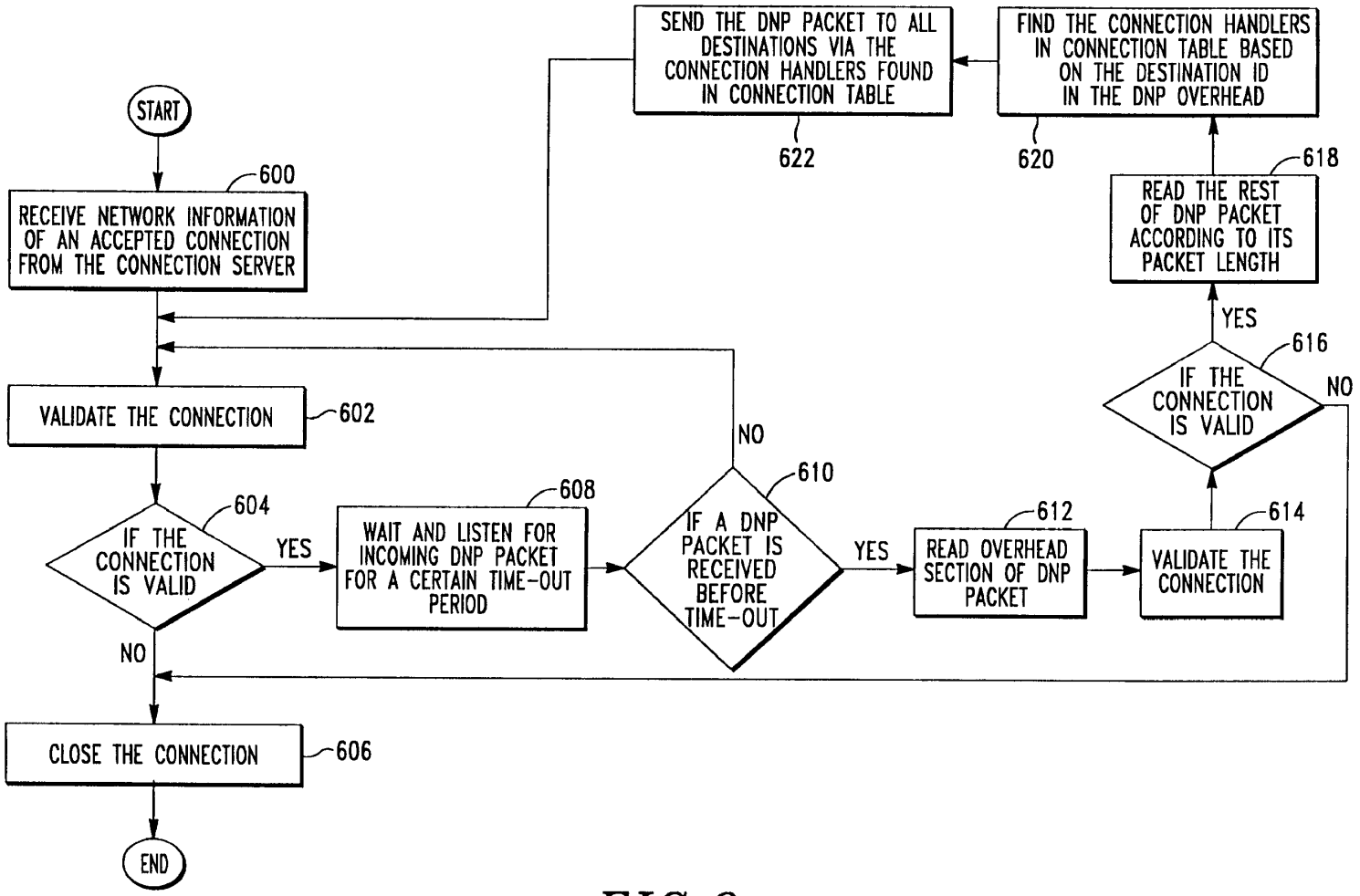
START
600
RECEIVE NETWORK INFORMATION OF AN ACCEPTED CONNECTION FROM THE CONNECTION SERVER
VALIDATE THE CONNECTION
602
IF THE CONNECTION IS VALID
604
YES
NO
CLOSE THE CONNECTION
606
END
WAIT AND LISTEN FOR INCOMING DNP PACKET FOR A CERTAIN TIME-OUT PERIOD
608
IF A DNP PACKET IS RECEIVED BEFORE TIME-OUT
610
NO
YES
READ OVERHEAD SECTION OF DNP PACKET
612
VALIDATE THE CONNECTION
614
IF THE CONNECTION IS VALID
616
NO
YES
READ THE REST OF DNP PACKET ACCORDING TO ITS PACKET LENGTH
618
FIND THE CONNECTION HANDLERS IN CONNECTION TABLE BASED ON THE DESTINATION ID IN THE DNP OVERHEAD
620
SEND THE DNP PACKET TO ALL DESTINATIONS VIA THE CONNECTION HANDLERS FOUND IN CONNECTION TABLE
622

FIG. 9

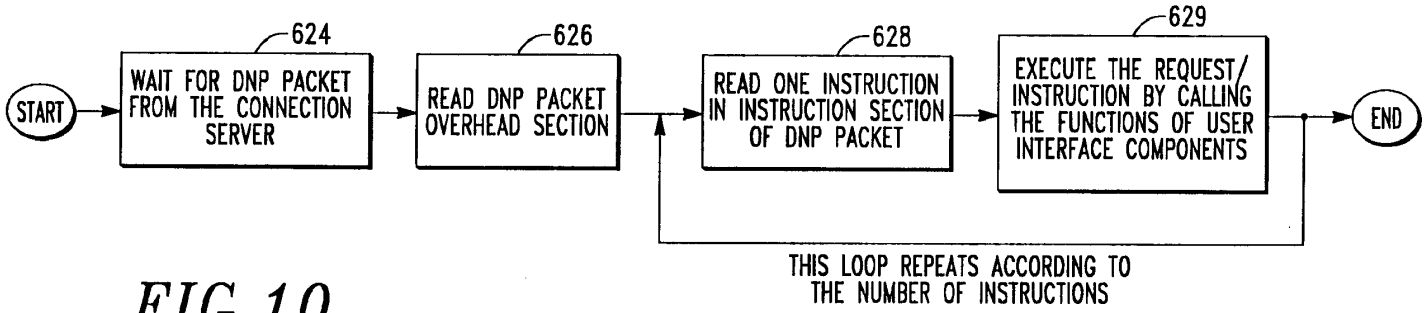

FIG. 10

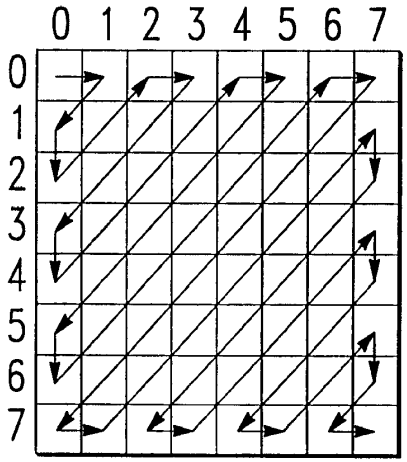

FIG. 11

SUBSTITUTE SHEET (RULE 26)

Dropbox Exhibit 1002 - Page 162
Dropbox, Inc. v. Entangled Media, LLC
IPR2024-00285 - U.S. Patent No. 8,484,260

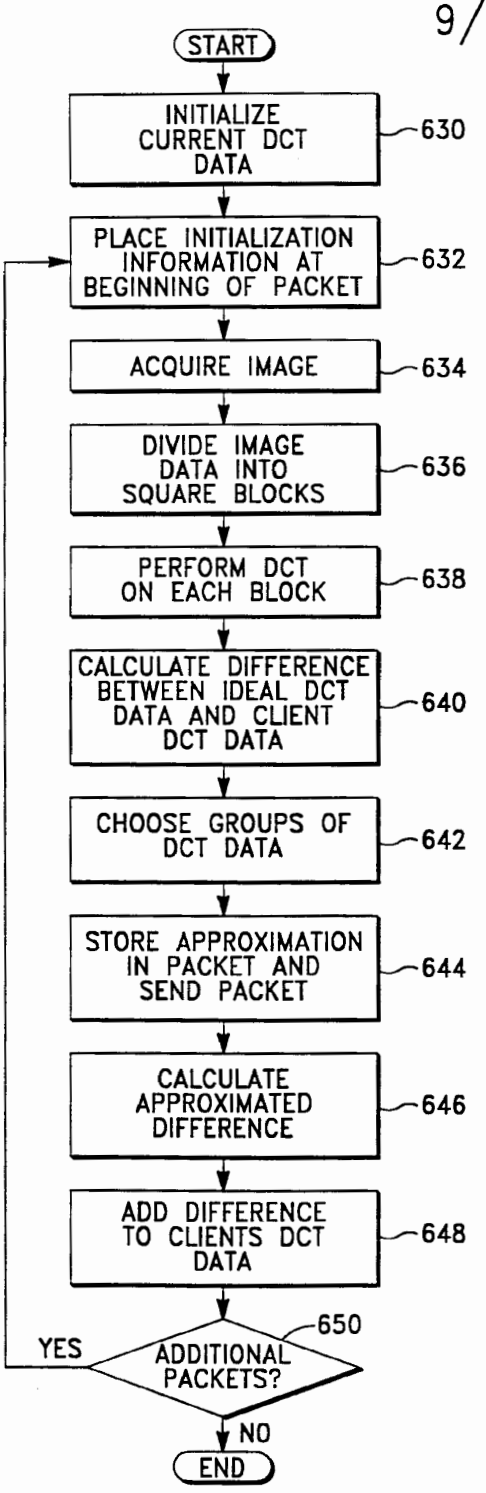

FIG. 12

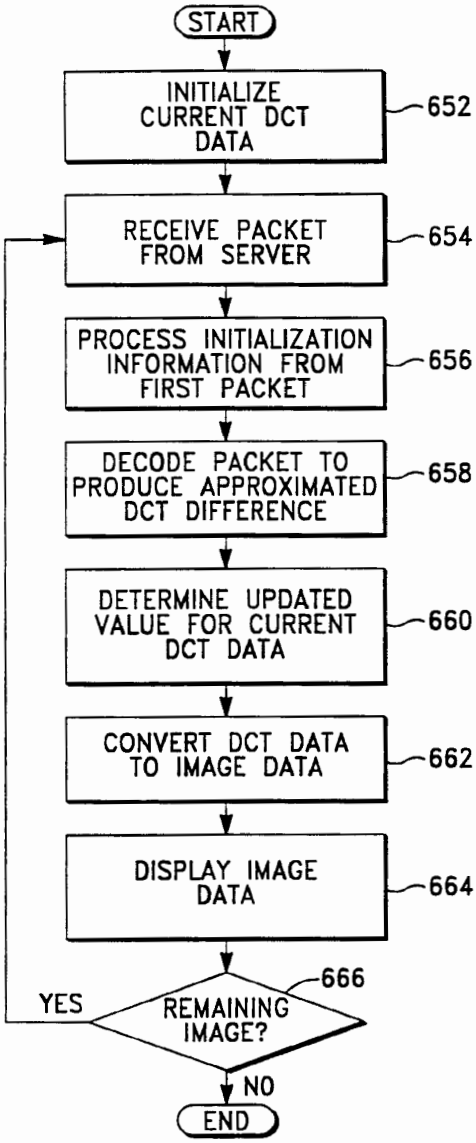

FIG. 13

Dropbox Exhibit 1002 - Page 163
Dropbox, Inc. v. Entangled Media, LLC
IPR2024-00285 - U.S. Patent No. 8,484,260

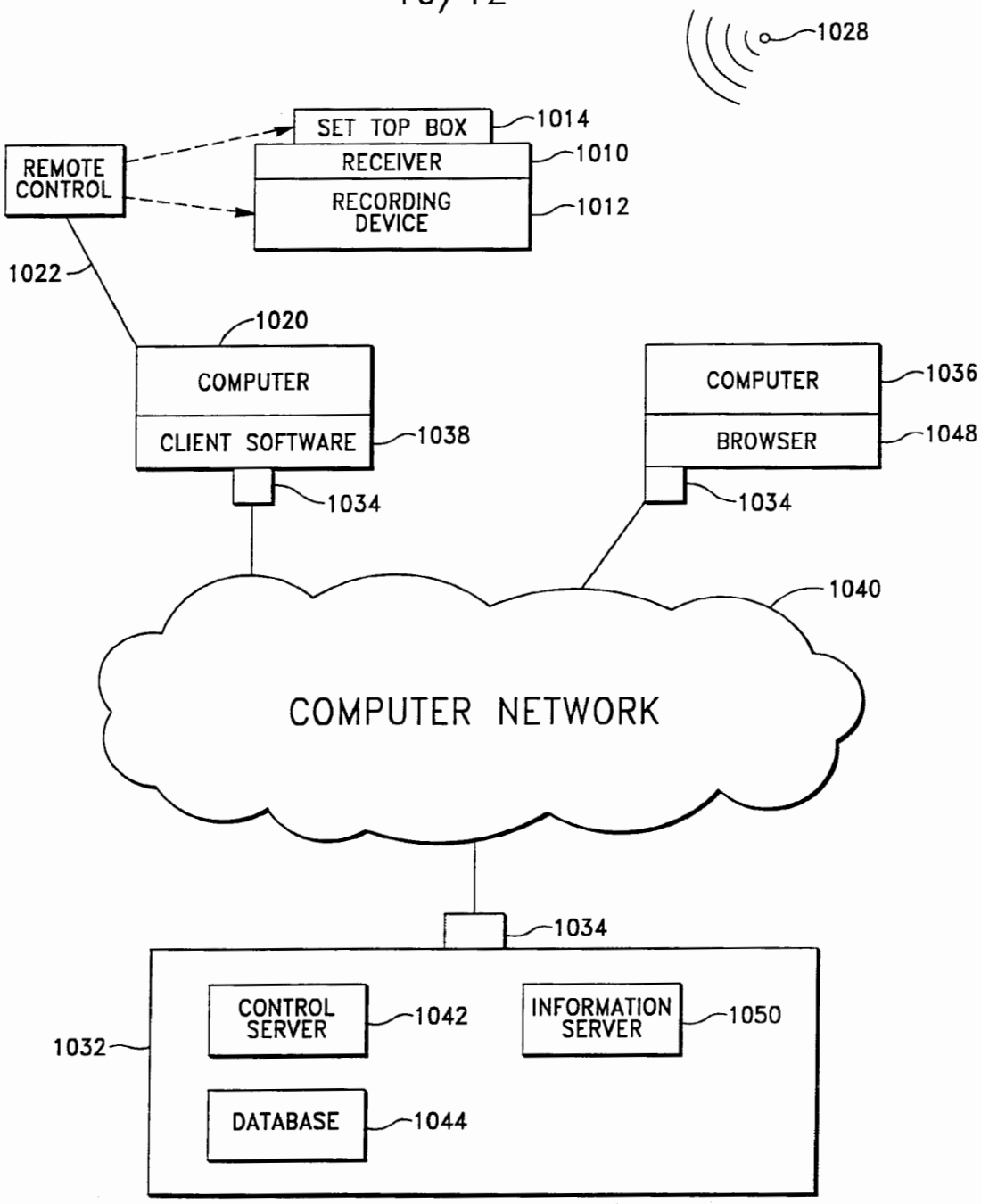

FIG. 14

Dropbox Exhibit 1002 - Page 164
Dropbox, Inc. v. Entangled Media, LLC
IPR2024-00285 - U.S. Patent No. 8,484,260

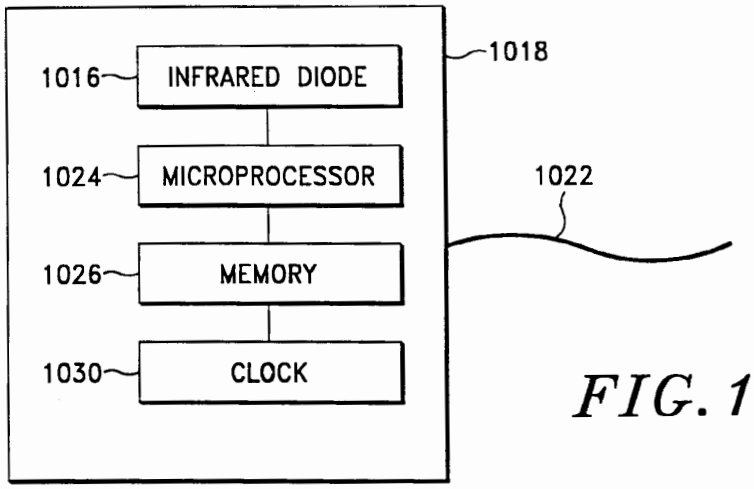

FIG. 15

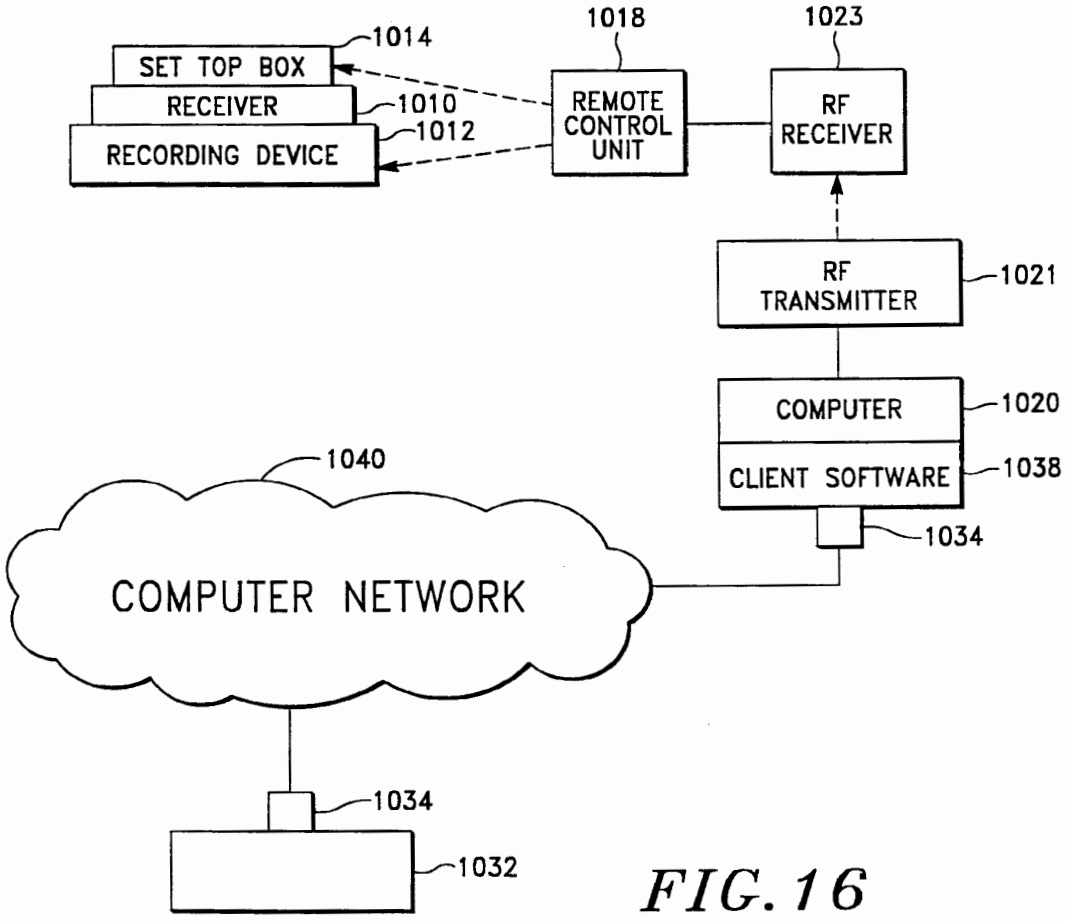

FIG. 16

Dropbox Exhibit 1002 - Page 165
Dropbox, Inc. v. Entangled Media, LLC
IPR2024-00285 - U.S. Patent No. 8,484,260

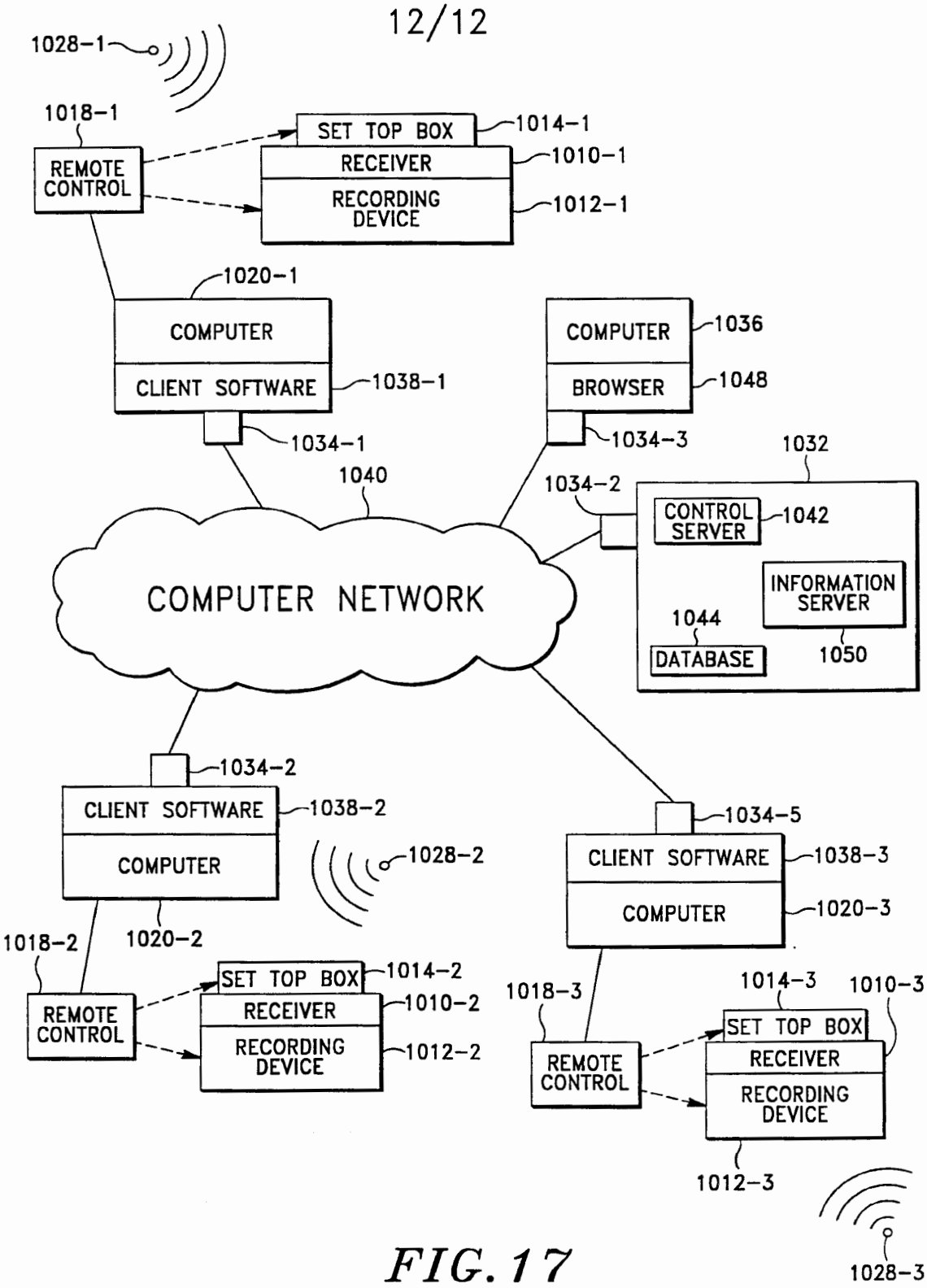

FIG. 17

Dropbox Exhibit 1002 - Page 166
Dropbox, Inc. v. Entangled Media, LLC
IPR2024-00285 - U.S. Patent No. 8,484,260

INTERNATIONAL SEARCH REPORT

International application No.
PCT/US00/32734

A. CLASSIFICATION OF SUBJECT MATTER

IPC(7) :G05B 23/02; G06F 15/16
US CL :340/825.06; 709/218

According to International Patent Classification (IPC) or to both national classification and IPC

B. FIELDS SEARCHED

Minimum documentation searched (classification system followed by classification symbols)

U.S. : 340/825.06; 345/327; 348/12; 709/209, 218

Documentation searched other than minimum documentation to the extent that such documents are included in the fields searched

Microsoft Press COMPUTER DICTIONARY

Electronic data base consulted during the international search (name of data base and, where practicable, search terms used)

East US Patents, WEST DERWENT API
search terms: remote, control, internet or brower-interface, vcr or recording

C. DOCUMENTS CONSIDERED TO BE RELEVANT

Category*	Citation of document, with indication, where appropriate, of the relevant passages	Relevant to claim No.
X	US 5,907,322 A (KELLY et al.) 25 May 1999, col. 6, line 43 - col. 7, line 10	1
X	US 5,956,487 A (VENKATRAMAN et al.) 21 September 1999, col. 4, lines 29-46	1
A	US 5,990,884 A (DOUMA et al.) 23 November 1999, abstract	1
A,P	US 6,052,750 A (LEA) 18 April 2000, abstract	1
A,E	US 6,182,094 B1, (HUMPLEMAN et al.) 30 January 2001, abstract	1

☐ Further documents are listed in the continuation of Box C. ☐ See patent family annex.

*	Special categories of cited documents:	"T"	later document published after the international filing date or priority date and not in conflict with the application but cited to understand the principle or theory underlying the invention
"A"	document defining the general state of the art which is not considered to be of particular relevance	"X"	document of particular relevance; the claimed invention cannot be considered novel or cannot be considered to involve an inventive step when the document is taken alone
"E"	earlier document published on or after the international filing date	"Y"	document of particular relevance; the claimed invention cannot be considered to involve an inventive step when the document is combined with one or more other such documents, such combination being obvious to a person skilled in the art
"L"	document which may throw doubts on priority claim(s) or which is cited to establish the publication date of another citation or other special reason (as specified)	"&"	document member of the same patent family
"O"	document referring to an oral disclosure, use, exhibition or other means		
"P"	document published prior to the international filing date but later than the priority date claimed		

Date of the actual completion of the international search 20 FEBRUARY 2001	Date of mailing of the international search report 19 MAR 2001
Name and mailing address of the ISA/US Commissioner of Patents and Trademarks Box PCT Washington, D.C. 20231 Facsimile No. (703) 305-3230	Authorized officer PATRICE WINDER James R. Matthews Telephone No. (703) 305-3938

Form PCT/ISA/210 (second sheet) (July 1998)★

Dropbox Exhibit 1002 - Page 167
Dropbox, Inc. v. Entangled Media, LLC
IPR2024-00285 - U.S. Patent No. 8,484,260

Electronic Patent Application Fee Transmittal

Application Number:	13424366
Filing Date:	19-Mar-2012
Title of Invention:	Method For a Cloud-Based Meta-File System to Virtually Unify Remote and Local Files Across a Range of Devices' Local File Systems
First Named Inventor/Applicant Name:	Erik Caso
Filer:	Gregory M. Stark/John Gustav-Wrathall
Attorney Docket Number:	3689.001US2

Filed as Large Entity

Utility under 35 USC 111(a) Filing Fees

Description	Fee Code	Quantity	Amount	Sub-Total in USD($)
Basic Filing:				
Pages:				
Claims:				
Miscellaneous-Filing:				
Petition:				
Patent-Appeals-and-Interference:				
Post-Allowance-and-Post-Issuance:				
Extension-of-Time:				

Description	Fee Code	Quantity	Amount	Sub-Total in USD($)
Miscellaneous:				
Submission- Information Disclosure Stmt	1806	1	180	180
		Total in USD ($)		**180**

Electronic Acknowledgement Receipt	
EFS ID:	14770522
Application Number:	13424366
International Application Number:	
Confirmation Number:	5386
Title of Invention:	Method For a Cloud-Based Meta-File System to Virtually Unify Remote and Local Files Across a Range of Devices' Local File Systems
First Named Inventor/Applicant Name:	Erik Caso
Customer Number:	21186
Filer:	Gregory M. Stark/John Gustav-Wrathall
Filer Authorized By:	Gregory M. Stark
Attorney Docket Number:	3689.001US2
Receipt Date:	23-JAN-2013
Filing Date:	19-MAR-2012
Time Stamp:	15:10:34
Application Type:	Utility under 35 USC 111(a)

Payment information:

Submitted with Payment	yes
Payment Type	Deposit Account
Payment was successfully received in RAM	$180
RAM confirmation Number	1774
Deposit Account	190743
Authorized User	
The Director of the USPTO is hereby authorized to charge indicated fees and credit any overpayment as follows: Charge any Additional Fees required under 37 C.F.R. Section 1.16 (National application filing, search, and examination fees) Charge any Additional Fees required under 37 C.F.R. Section 1.17 (Patent application and reexamination processing fees)	

Charge any Additional Fees required under 37 C.F.R. Section 1.19 (Document supply fees)

Charge any Additional Fees required under 37 C.F.R. Section 1.20 (Post Issuance fees)

Charge any Additional Fees required under 37 C.F.R. Section 1.21 (Miscellaneous fees and charges)

File Listing:

Document Number	Document Description	File Name	File Size(Bytes)/ Message Digest	Multi Part /.zip	Pages (if appl.)
1		3689001US2_resp_012313.pdf	145101 ac47e664515bae457fa9033939e89230dd884646	yes	12
	Multipart Description/PDF files in .zip description				
	Document Description		**Start**	**End**	
	Miscellaneous Incoming Letter		1	1	
	Transmittal Letter		2	3	
	Information Disclosure Statement (IDS) Form (SB08)		4	4	
	Amendment/Req. Reconsideration-After Non-Final Reject		5	5	
	Claims		6	8	
	Applicant Arguments/Remarks Made in an Amendment		9	12	
Warnings:					
Information:					
2	Non Patent Literature	3689001US1_AARN_07-20-12.pdf	90875 bc1ae050474cb8e174e697e1b34e5ca8edabb36f	no	11
Warnings:					
Information:					
3	Non Patent Literature	3689001US1_NOAR_09-12-12.pdf	598934 5b7926da778402d986358e51dacc6868f15309cf	no	14
Warnings:					
Information:					
4	Foreign Reference	WO0114634A1.pdf	831881 aeee5ecf29fdb6daba0743921e4697ad112c7da8	no	29
Warnings:					
Information:					
5	Foreign Reference	WO0203046A2.pdf	1598361 358b906b7d5b1bba91bf55388586b43d4f144bbb	no	36

Warnings:					
Information:					
6	Foreign Reference	WO0140887A1.pdf	5490564 fe6b6b08db1f9efa0cd7ad6f63e240cad5a03c55	no	46
Warnings:					
Information:					
7	Fee Worksheet (SB06)	fee-info.pdf	30383 69466e7658097e648d7071d230c8bb561ef2072c	no	2
Warnings:					
Information:					
			Total Files Size (in bytes):	8786099	

This Acknowledgement Receipt evidences receipt on the noted date by the USPTO of the indicated documents, characterized by the applicant, and including page counts, where applicable. It serves as evidence of receipt similar to a Post Card, as described in MPEP 503.

New Applications Under 35 U.S.C. 111
If a new application is being filed and the application includes the necessary components for a filing date (see 37 CFR 1.53(b)-(d) and MPEP 506), a Filing Receipt (37 CFR 1.54) will be issued in due course and the date shown on this Acknowledgement Receipt will establish the filing date of the application.

National Stage of an International Application under 35 U.S.C. 371
If a timely submission to enter the national stage of an international application is compliant with the conditions of 35 U.S.C. 371 and other applicable requirements a Form PCT/DO/EO/903 indicating acceptance of the application as a national stage submission under 35 U.S.C. 371 will be issued in addition to the Filing Receipt, in due course.

New International Application Filed with the USPTO as a Receiving Office
If a new international application is being filed and the international application includes the necessary components for an international filing date (see PCT Article 11 and MPEP 1810), a Notification of the International Application Number and of the International Filing Date (Form PCT/RO/105) will be issued in due course, subject to prescriptions concerning national security, and the date shown on this Acknowledgement Receipt will establish the international filing date of the application.

IN THE UNITED STATES PATENT AND TRADEMARK OFFICE

Applicant: Erik Caso et al.

Title: Method For a Cloud-Based Meta-File System to Virtually Unify Remote and Local Files Across a Range of Devices' Local File Systems

Docket No.:	3689.001US2	Serial No.:	13/424,366
Filed:	March 19, 2012	Due Date:	January 25, 2013
Examiner:	Binh Ho	Group Art Unit:	2163
Customer No.:	21186	Confirmation No.:	5386

Mail Stop Amendment
Commissioner for Patents
P.O. Box 1450
Alexandria, VA 22313-1450

We are transmitting herewith the following attached items (as indicated with an "X"):

X Amendment and Response under 37 C.F.R. § 1.111 (8 pgs.)
X Supplemental Information Disclosure Statement (2 pgs.), Form 1449 (1 pg.) Copies of Cited References (5).
X Authorization to charge Deposit Account 19-0743 in the amount of $180.00 to cover the fee for consideration of Information Disclosure Statement under 37 C.F.R. § 1.97(c).

If not provided for in a separate paper filed herewith, please consider this a PETITION FOR EXTENSION OF TIME for sufficient number of months to enter these papers and please charge any additional fees or credit overpayment to Deposit Account No. 19-0743.

SCHWEGMAN, LUNDBERG & WOESSNER, P.A.
Customer No.: 21186

By: /Thierry Lo/
Thierry Lo
Reg. No. 49,097

IN THE UNITED STATES PATENT AND TRADEMARK OFFICE

Applicants:	Erik Caso et al.	Examiner:	Binh Ho
Serial No.:	13/424,366	Group Art Unit:	2163
Filed:	March 19, 2012	Docket:	3689.001US2
Customer No.:	21186	Confirmation No.:	5386
Title:	Method For a Cloud-Based Meta-File System to Virtually Unify Remote and Local Files Across a Range of Devices' Local File Systems		

SUPPLEMENTAL INFORMATION DISCLOSURE STATEMENT

MS Amendment
Commissioner for Patents
P.O. Box 1450
Alexandria, VA 22313-1450

In compliance with the duty imposed by 37 C.F.R. § 1.56, and in accordance with 37 C.F.R. §§ 1.97 *et. seq*., the enclosed materials are brought to the attention of the Examiner for consideration in connection with the above-identified patent application. Applicants respectfully request that this Information Disclosure Statement be entered and the documents listed on the attached PTO 1449 Form be considered by the Examiner and made of record. Pursuant to the provisions of MPEP 609, Applicant requests that a copy of the PTO 1449 Form, initialed as being considered by the Examiner, be returned to the Applicant with the next official communication.

Pursuant to 37 C.F.R. § 1.97(c)(2), Applicants hereby authorize the Commissioner to charge the fee of $180.00 as set forth in 37 C.F.R. § 1.17(p), to Deposit Account No. 19-0743. Please charge any additional fees or deficiencies, or credit any overpayment to Deposit Account No. 19-0743.

Pursuant to 37 C.F.R. § 1.98(a)(2), copies of cited U.S. Patents and Published Applications, and Non-Published Applications identifiable by USPTO Serial Number, are no longer required to be provided to the Office. Applicants acknowledge the requirement to submit copies of foreign patent documents and non-patent literature in accordance with 37 C.F.R § 1.98(a)(2).

The Examiner is invited to contact the undersigned at the telephone number indicated if there are any questions regarding this communication.

Respectfully submitted,

SCHWEGMAN, LUNDBERG & WOESSNER, P.A.
P.O. Box 2938
Minneapolis, MN 55402
(949) 354-0200

Date 23 January 2013 By

Thierry Lo
Reg. No. 49,097

TL:jdgw

Modified form PTO/SB/08A(04-07) OMB 651-0031
US Patent & Trademark Office: U.S. DEPARTMENT OF COMMERCE
Under the Paperwork Reduction Act of 1995, no persons are required to respond to a collection of information unless it contains a valid OMB control number.

Substitute for form 1449A/PTO **INFORMATION DISCLOSURE STATEMENT BY APPLICANT** (Use as many sheets as necessary)	*Complete if Known*	
	Application Number	13/424,366
	Filing Date	March 19, 2012
	First Named Inventor	Erik Caso
	Group Art Unit	2163
	Examiner Name	Binh Ho
Sheet 1 of 1	Attorney Docket No: 3689.001US2	

US PATENT DOCUMENTS

Examiner Initial *	USP Document Number	Publication Date	Name of Patentee or Applicant of cited Document
	US-20080082490 A1	4/3/2008	MacLaurin, Matthew B, et al.
	US-20080189390 A1	8/7/2008	Heller, David, et al.
	US-20090062944 A1	3/5/2009	Wood, Policarpo, et al.
	US-20100205152 A1	8/12/2010	Ansari, Amir, et al.
	US-20100274982 A1	10/28/2010	Mehr, John D, et al.
	US-20110093471 A1	4/21/2011	Brockway, Brian, et al.
	US-20110231844 A1	9/22/2011	Ben-Shaul, Israel Zvi, et al.
	US-7,805,565	9/28/2010	Milligan, Charles, et al.
	US-8,296,338	10/23/2012	Caso, Erik, et al.

FOREIGN PATENT DOCUMENTS

Examiner Initial *	Foreign Document Number	Publication Date	Name of Patentee or Applicant of cited Document	T 1
	WO-0114634 A1	3/1/2001	Johnson, Barry C.	
	WO-0140887 A1	6/7/2001	Hesslink, Lambertus, et al.	
	WO-0203046 A2	1/10/2002		

OTHER DOCUMENTS – NON PATENT LITERATURE DOCUMENTS

Examiner Initial *	Include name of the author (in CAPITAL LETTERS), title of the article (when appropriate), title of the item (book, magazine, journal, serial, symposium, catalog, etc.), date, page(s), volume-issue number(s), publisher, city and/or country where published.	T 1
	"Application Serial No. 12/774,231, Notice of Allowance mailed 09-12-12", 14 pgs	
	"Application Serial No. 12/774,231, Response filed 07/20/12 to Non Final Office Action mailed 04/26/12", 11 pgs.	

EXAMINER **DATE CONSIDERED**

* EXAMINER: Initial if reference considered, whether or not citation is in conformance with MPEP 609. Draw line through citation if not in conformance and not considered. Include copy of this form with next communication to applicant. 1 Applicant is to place a check mark here if English language Translation is attached

UNITED STATES PATENT AND TRADEMARK OFFICE

UNITED STATES DEPARTMENT OF COMMERCE
United States Patent and Trademark Office
Address: COMMISSIONER FOR PATENTS
P.O. Box 1450
Alexandria, Virginia 22313-1450
www.uspto.gov

APPLICATION NO.	FILING DATE	FIRST NAMED INVENTOR	ATTORNEY DOCKET NO.	CONFIRMATION NO.
13/424,366	03/19/2012	Erik Caso	3689.001US2	5386

21186 7590 10/25/2012

SCHWEGMAN, LUNDBERG & WOESSNER, P.A.
P.O. BOX 2938
MINNEAPOLIS, MN 55402

EXAMINER	
HO, BINH VAN	
ART UNIT	PAPER NUMBER
2163	

NOTIFICATION DATE	DELIVERY MODE
10/25/2012	ELECTRONIC

Please find below and/or attached an Office communication concerning this application or proceeding.

The time period for reply, if any, is set in the attached communication.

Notice of the Office communication was sent electronically on above-indicated "Notification Date" to the following e-mail address(es):

uspto@slwip.com
SLW@blackhillsip.com

Dropbox Exhibit 1002 - Page 177
Dropbox, Inc. v. Entangled Media, LLC
IPR2024-00285 - U.S. Patent No. 8,484,260

Office Action Summary	Application No.	Applicant(s)	
	13/424,366	CASO ET AL.	
	Examiner	Art Unit	
	BINH V. HO	2163	

-- The MAILING DATE of this communication appears on the cover sheet with the correspondence address --

Period for Reply

A SHORTENED STATUTORY PERIOD FOR REPLY IS SET TO EXPIRE *3* MONTH(S) OR THIRTY (30) DAYS, WHICHEVER IS LONGER, FROM THE MAILING DATE OF THIS COMMUNICATION.

- Extensions of time may be available under the provisions of 37 CFR 1.136(a). In no event, however, may a reply be timely filed after SIX (6) MONTHS from the mailing date of this communication.
- If NO period for reply is specified above, the maximum statutory period will apply and will expire SIX (6) MONTHS from the mailing date of this communication.
- Failure to reply within the set or extended period for reply will, by statute, cause the application to become ABANDONED (35 U.S.C. § 133). Any reply received by the Office later than three months after the mailing date of this communication, even if timely filed, may reduce any earned patent term adjustment. See 37 CFR 1.704(b).

Status

1)☒ Responsive to communication(s) filed on *19 March 2012*.

2a)☐ This action is **FINAL**. 2b)☒ This action is non-final.

3)☐ An election was made by the applicant in response to a restriction requirement set forth during the interview on _____; the restriction requirement and election have been incorporated into this action.

4)☐ Since this application is in condition for allowance except for formal matters, prosecution as to the merits is closed in accordance with the practice under *Ex parte Quayle*, 1935 C.D. 11, 453 O.G. 213.

Disposition of Claims

5)☒ Claim(s) *1-5* is/are pending in the application.

5a) Of the above claim(s) _____ is/are withdrawn from consideration.

6)☐ Claim(s) _____ is/are allowed.

7)☒ Claim(s) *1-5* is/are rejected.

8)☐ Claim(s) _____ is/are objected to.

9)☐ Claim(s) _____ are subject to restriction and/or election requirement.

Application Papers

10)☐ The specification is objected to by the Examiner.

11)☒ The drawing(s) filed on *19 March 2012* is/are: a)☒ accepted or b)☐ objected to by the Examiner.

Applicant may not request that any objection to the drawing(s) be held in abeyance. See 37 CFR 1.85(a).

Replacement drawing sheet(s) including the correction is required if the drawing(s) is objected to. See 37 CFR 1.121(d).

12)☐ The oath or declaration is objected to by the Examiner. Note the attached Office Action or form PTO-152.

Priority under 35 U.S.C. § 119

13)☐ Acknowledgment is made of a claim for foreign priority under 35 U.S.C. § 119(a)-(d) or (f).

a)☐ All b)☐ Some * c)☐ None of:

1.☐ Certified copies of the priority documents have been received.

2.☐ Certified copies of the priority documents have been received in Application No. _____.

3.☐ Copies of the certified copies of the priority documents have been received in this National Stage application from the International Bureau (PCT Rule 17.2(a)).

* See the attached detailed Office action for a list of the certified copies not received.

Attachment(s)

1) ☒ Notice of References Cited (PTO-892)
2) ☐ Notice of Draftsperson's Patent Drawing Review (PTO-948)
3) ☒ Information Disclosure Statement(s) (PTO/SB/08) Paper No(s)/Mail Date *03/19/2012*.
4) ☐ Interview Summary (PTO-413) Paper No(s)/Mail Date. _____ .
5) ☐ Notice of Informal Patent Application
6) ☐ Other: _____.

Dropbox Exhibit 1002 - Page 178
Dropbox, Inc. v. Entangled Media, LLC
IPR2024-00285 - U.S. Patent No. 8,484,260

DETAILED ACTION

Claim Rejections - 35 USC § 112

1. The following is a quotation of the second paragraph of 35 U.S.C. 112:

> The specification shall conclude with one or more claims particularly pointing out and distinctly claiming the subject matter which the applicant regards as his invention.

2. Claim 1 is rejected under 35 U.S.C. 112, second paragraph, as being indefinite for failing to particularly point out and distinctly claim the subject matter which applicant regards as the invention.

In claim 1; it in the limitation of "*if the peer-to-peer connection is brokered, transferring the physical file from the second device to the first device*". It is not clear how the peer-to-peer connection is **brokered** can transferring the physical file from the second device to the first device.

Examiner has tried to interpret the claims, as best the Examiner can ascertain, to develop an appropriate prior art rejection in the interests of compact prosecution. If any interpretation of the Examiner's is considered incorrect or off-base, the Examiner invites the Applicant to show the portions of the Applicant's specification which give a more proper interpretation of the claimed subject matter.

Claim Rejections - 35 USC § 102

3. The following is a quotation of the appropriate paragraphs of 35 U.S.C. 102 that form the basis for the rejections under this section made in this Office action:

> A person shall be entitled to a patent unless –
>
> (b) the invention was patented or described in a printed publication in this or a foreign country or in public use or on sale in this country, more than one year prior to the date of application for patent in the United States.

4. Claims 1-3 are rejected under 35 U.S.C. 102(b) as being anticipated by Clarke (US 2006/0161585).

(Claim 1)

Clarke discloses a process for operating on files located on multiple devices using a singular file system comprising:

accepting a request to operate on a file at a first device, wherein the file is selected from the singular file system on the first device; intercepting the request by a software client on the first device *("client is automatically connected to other clients that are also accessing the shared object. Other clients that are authorized to access the shared object are included in a peer group. The client retrieves a manifest file associated with the shared object. The manifest file identifies the locations of different versions and instances of the shared object", paragraph [0004])*;

determining by the software client if the file is physically located on the first device or a second device, wherein a visual representation of the singular file system on the first device is identical to a visual representation of the singular file system on the second device *("manifest file identifies the locations where other*

versions and instances of the shared object are stored within the system", paragraph [0003]; Fig. 2);

if the file is physically located on a second device, requesting by the software client on the first device that a peer-to-peer connection be brokered by a server-based web service between the first device and the second device *("connected clients may be accessed through the server when the peer-to-peer network is not available. The client may then disconnect from the peer-to-peer network and continue to access the shared object on the server", paragraph [0005])*;

if the peer-to-peer connection is brokered, transferring the physical file from the second device to the first device; and performing the operation on the file at the first device *("client retrieves the manifest file associated with the shared object. The manifest file identifies other locations where the shared object exists", paragraph [0005]; Fig. 2).*

(Claim 2)

Clarke discloses substantially all of the elements of claim 1, and Clarke further discloses wherein if the peer-to-peer connection cannot be brokered between the first device and the second device, an alternative connection is established by the server-based web service *("connected clients may be accessed through the server when the peer-to-peer network is not available. The client may then disconnect from the peer-to-peer network and continue to access the shared object on the server", paragraph [0005]).*

(Claim 3)

Clarke discloses substantially all of the elements of claim 2, and Clarke further discloses wherein the alternative connection is an HTTP relay *(web server 250 of Fig. 2).*

Claim Rejections - 35 USC § 103

5. The following is a quotation of 35 U.S.C. 103(a) which forms the basis for all obviousness rejections set forth in this Office action:

> (a) A patent may not be obtained though the invention is not identically disclosed or described as set forth in section 102 of this title, if the differences between the subject matter sought to be patented and the prior art are such that the subject matter as a whole would have been obvious at the time the invention was made to a person having ordinary skill in the art to which said subject matter pertains. Patentability shall not be negatived by the manner in which the invention was made.

6. Claims 4-5 are rejected under 35 U.S.C. 103(a) as being unpatentable over Clarke (US 2006/0161585) in view of Aboulhosn (U.S. 2007/0050069).

(Claim 4)

Clarke discloses substantially all of the elements of claim 1, except wherein the software client determines if the file is physically located on the first device or a second device by reviewing file metadata.

Aboulhosn teaches whenever the actual file is changed at the file owner, the file owner sends the updated metadata for the file to the other members, who update the metadata associated with their corresponding virtual file as appropriate (paragraph [0014]).

It would have been obvious to one having ordinary skill in the art at the time the invention was made to check if the update metadata for the file as

shown by Aboulhosn in Clarke. The skilled artisan would have been motivated to improve, Clarke per the above in order to determine if the file is change at the file owner..

(Claim 5)

The combination of Clarke and Aboulhosn discloses substantially all of the elements of claim 1, and Aboulhosn further discloses further comprising updating metadata of the singular file system on the first device and the second device to reflect a change in physical location of the file from the second device to the second device *("The use of a proxy file owner allows other members of the group to have access to a shared file even though the actual file owner of the shared file may be offline at that time. Such proxying of file ownership is particularly useful when the group owner is generally online and the file owner is generally offline (e.g., the file owner is a laptop computer)", paragraph [0017]).*

Inquiry

7. Any inquiry concerning this communication or earlier communications from the examiner should be directed to BINH V. HO whose telephone number is (571)272-8583. The examiner can normally be reached on M-F from 8:00AM - 4:30PM.

If attempts to reach the examiner by telephone are unsuccessful, the examiner's supervisor, Tony Mahmoudi can be reached on 571 272 4078. The fax phone number for the organization where this application or proceeding is assigned is 571-273-8300.

Information regarding the status of an application may be obtained from the Patent Application Information Retrieval (PAIR) system. Status information for published applications may be obtained from either Private PAIR or Public PAIR. Status information for unpublished applications is available through Private PAIR only. For more information about the PAIR system, see http://pair-direct.uspto.gov. Should you have questions on access to the Private PAIR system, contact the Electronic Business Center (EBC) at 866-217-9197 (toll-free). If you would like assistance from a USPTO Customer Service Representative or access to the automated information system, call 800-786-9199 (IN USA OR CANADA) or 571-272-1000.

/BINH V HO/
Primary Examiner, Art Unit 2163

BINH V HO
Primary Examiner
Art Unit 2163

Notice of References Cited	Application/Control No. 13/424,366	Applicant(s)/Patent Under Reexamination CASO ET AL.	
	Examiner BINH V. HO	Art Unit 2163	Page 1 of 1

U.S. PATENT DOCUMENTS

*		Document Number Country Code-Number-Kind Code	Date MM-YYYY	Name	Classification
*	A	US-2006/0161585 A1	07-2006	Clarke et al.	707/104.1
*	B	US-2005/0256909 A1	11-2005	Aboulhosn et al.	707/200
*	C	US-2003/0009587 A1	01-2003	Harrow et al.	709/238
*	D	US-2004/0148434 A1	07-2004	Matsubara et al.	709/246
*	E	US-2006/0161516 A1	07-2006	Clarke et al.	707/002
*	F	US-2011/0110568 A1	05-2011	Vesper et al.	382/128
*	G	US-2012/0079117 A1	03-2012	Wills et al.	709/226
	H	US-			
	I	US-			
	J	US-			
	K	US-			
	L	US-			
	M	US-			

FOREIGN PATENT DOCUMENTS

*		Document Number Country Code-Number-Kind Code	Date MM-YYYY	Country	Name	Classification
	N					
	O					
	P					
	Q					
	R					
	S					
	T					

NON-PATENT DOCUMENTS

*		Include as applicable: Author, Title Date, Publisher, Edition or Volume, Pertinent Pages)
	U	
	V	
	W	
	X	

*A copy of this reference is not being furnished with this Office action. (See MPEP § 707.05(a).)
Dates in MM-YYYY format are publication dates. Classifications may be US or foreign.

Dropbox Exhibit 1002 - Page 185
Dropbox, Inc. v. Entangled Media, LLC
IPR2024-00285 - U.S. Patent No. 8,484,260

Form PTO-1449 (Rev. 2-32) U.S. Department of Commerce Patent & Trademark Office INFORMATION DISCLOSURE STATEMENT *(Use several sheets if necessary)*	Atty. Docket No. **ENT0001-DIV1**	Serial No. **To Be Assigned**
	Applicant **Erik CASO, et al.**	
	Filing Date **Herewith**	Group **To Be Assigned**

U.S. PATENT DOCUMENTS

Examiner Initial		Document Number	Date	Name	Class	Sub-Class	Filing Date (if appropriate)
		2009/0254592	10/8/09	Marinov, et al.	1	1	11/11/08
		7,600,036	10/6/09	Hesselink, et al.	709	234	6/2/05
		7,587,471	9/8/09	Yasuda, et al.	709	220	3/14/03
		7,587,467	9/8/09	Hesselink, et al.	709	214	11/13/04
		7,546,353	6/9/09	Hesselink, et al.	709	216	11/13/04
		7,499,905	3/3/09	Jaschek, et al.	1	1	10/17/05
		7,467,187	12/16/08	Hesselink, et al.	709	205	10/9/02
		2008/0104077	5/1/08	Gimpl, et al.	1	1	1/6/08
		7,337,171	2/26/08	Gimpl, et al.	1	1	5/12/05
		2007/0162510	7/12/07	Lenzmeier, et al.	707	200	12/30/05
		2006/0277314	12/7/06	Hesselink, et al.	709	229	8/16/06
		7,120,692	10/10/06	Hesselink, et al.	709	225	11/19/02
		2006/0206533	9/14/06	MacLaurin, et al.	707	200	3/14/05
		2005/0256909	11/17/05	Aboulhosn, et al.	1	1	12/15/04
		6,938,042	8/30/05	Aboulhosn, et al.	1	1	10/8/02
		2005/0149481	7/7/05	Hesselink, et al.	1	1	11/13/04
		2005/0144195	6/30/05	Hesselink, et al.	1	1	11/13/04
		2005/0144200	6/30/05	Hesselink, et al.	1	1	11/13/04

EXAMINER /Binh Ho/	DATE CONSIDERED 10/19/2012

EXAMINER: Initial if citation considered, whether or not citation is in conformance with MPEP 609; draw line through citation if not in conformance and not considered. Include copy of this form with next communication.

ALL REFERENCES CONSIDERED EXCEPT WHERE LINED THROUGH. /B.H./

Serial No. To Be Assigned (Docket No. ENT0001-DIV1)
Information Disclosure Statement

U.S. PATENT DOCUMENTS CONT'D.							
		2005/0138186	6/23/05	Hesselink, et al.	709	229	11/13/04
		2005/0114711	5/26/05	Hesselink, et al.	726	4	11/13/04
		2004/0172449	9/2/04	Hesselink, et al.	709	204	3/5/04
		6,732,158	5/4/04	Hesselink, et al.	709	208	6/29/00
		6,512,586	1/28/03	Maris	356	432	11/13/01
		6,499,054	12/24/02	Hesselink, et al.	709	204	12/2/99
		6,381,019	4/30/02	Maris	356	432	6/30/00
FOREIGN PATENT DOCUMENTS							
	*	WO 04/046852	6/3/04	Senvid, Inc., et al.	G06F	15/16	11/6/03
	*	JP 2004-046661	2/12/04	Hitachi Ltd.	G06F	12/00	7/15/02
	*	WO 03/085559	10/16/03	Synerdrive, Inc.	G06F	17/30	4/3/03
	*	WO 02/003046	1/10/02	Brown University Research Foundation	G01N	21/00	6/26/01
	*	WO 01/040887	6/7/01	Senvid, Inc.	H04L	12/28	12/1/00
	*	WO 01/014634	3/1/01	AstenJohnson, Inc., et al.	D21F	1/00	8/18/00
OTHER DOCUMENTS (Including Author, Title, Date, Pertinent Pages, Etc.)							

EXAMINER	DATE CONSIDERED
/Binh Ho/	10/19/2012

EXAMINER: Initial if citation considered, whether or not citation is in conformance with MPEP 609; draw line through citation if not in conformance and not considered. Include copy of this form with next communication.

17676/105002
Doc. No. 18386719

ALL REFERENCES CONSIDERED EXCEPT WHERE LINED THROUGH. /B.H./

* Reference cited in parent (Application Serial No. 12/774,231), and not provided herewith.

EAST Search History

EAST Search History (Prior Art)

Ref #	Hits	Search Query	DBs	Default Operator	Plurals	Time Stamp
S1	2	"20100287219"	US-PGPUB; USPAT; USOCR; FPRS; EPO; JPO; DERWENT; IBM_TDB	OR	ON	2011/12/23 16:55
S2	266	707/827.ccls.	US-PGPUB; USPAT; USOCR; FPRS; EPO; JPO; DERWENT; IBM_TDB	OR	ON	2011/12/23 16:59
S3	770	717/176.ccls.	US-PGPUB; USPAT; USOCR; FPRS; EPO; JPO; DERWENT; IBM_TDB	OR	ON	2011/12/23 17:00
S5	151	michael with abraham	US-PGPUB; USPAT; USOCR; FPRS; EPO; JPO; DERWENT; IBM_TDB	OR	ON	2011/12/23 17:01
S6	53	("20040172449" | "20050114711" | "20050138186" | "20050144195" | "20050144200" | "20050149481" | "20050256909" | "20060206533" | "20060277314" | "20070162510" | "20080104077" | "20090254592" | "6381019" | "6499054" | "6512586" | "6732158" | "6938042" | "7120692" | "7337171" | "7467187" | "7499905" | "7546353" | "7587467" | "7587471" | "7600036").PN.	US-PGPUB; USPAT; USOCR; FPRS; EPO; JPO; DERWENT; IBM_TDB	OR	ON	2012/01/31 19:01
S7	6	("7747999" "20030221190" "7266595").pn.	US-PGPUB; USPAT; USOCR; FPRS; EPO; JPO; DERWENT; IBM_TDB	OR	ON	2012/01/31 21:14
S8	5	("7747999" "20030221190" "7266595").pn. and (install$4)	US-PGPUB; USPAT; USOCR; FPRS; EPO; JPO;	OR	ON	2012/01/31 21:18

Dropbox Exhibit 1002 - Page 188
Dropbox, Inc. v. Entangled Media, LLC
IPR2024-00285 - U.S. Patent No. 8,484,260

			DERWENT; IBM_TDB			
S9	5	erik with caso	US-PGPUB; USPAT; USOCR; FPRS; EPO; JPO; DERWENT; IBM_TDB	OR	ON	2012/01/31 21:18
S10	1881	(install$6 same multipl$4 same (device user)).ti.	US-PGPUB; USPAT; USOCR; FPRS; EPO; JPO; DERWENT; IBM_TDB	OR	ON	2012/01/31 21:22
S11	14	(install$6 same software same multipl$4 same (device user)).ti.	US-PGPUB; USPAT; USOCR; FPRS; EPO; JPO; DERWENT; IBM_TDB	OR	ON	2012/01/31 21:25
S12	7366	717/168-178.ccls.	US-PGPUB; USPAT; USOCR; FPRS; EPO; JPO; DERWENT; IBM_TDB	OR	ON	2012/01/31 21:32
S13	7335	717/168-178.ccls. and (install$6 multipl$4 device user)	US-PGPUB; USPAT; USOCR; FPRS; EPO; JPO; DERWENT; IBM_TDB	OR	ON	2012/01/31 21:33
S14	5793	717/168-178.ccls. and (install$6 multipl$4 device user) with software	US-PGPUB; USPAT; USOCR; FPRS; EPO; JPO; DERWENT; IBM_TDB	OR	ON	2012/01/31 21:33
S15	756	717/168-178.ccls. and (install$6 multipl$4 device user) with software and registrat$4	US-PGPUB; USPAT; USOCR; FPRS; EPO; JPO; DERWENT; IBM_TDB	OR	ON	2012/01/31 21:33
S16	390	717/168-178.ccls. and (install$6 multipl$4 device user) with software and registrat$4 and inventor$4	US-PGPUB; USPAT; USOCR; FPRS; EPO; JPO; DERWENT; IBM_TDB	OR	ON	2012/01/31 21:34
S17	79	717/168-178.ccls. and (install$6 multipl$4 device user) with software and registrat$4 and inventor$4 and index$4	US-PGPUB; USPAT; USOCR;	OR	ON	2012/01/31 21:36

Dropbox Exhibit 1002 - Page 189
Dropbox, Inc. v. Entangled Media, LLC
IPR2024-00285 - U.S. Patent No. 8,484,260

			FPRS; EPO; JPO; DERWENT; IBM_TDB			
S18	1	"20100287219" and peer-to-peer	US-PGPUB; USPAT; USOCR; FPRS; EPO; JPO; DERWENT; IBM_TDB	OR	ON	2012/01/31 21:59
S22	6	("20060077189" "20080195693" "20090319635").pn. and (monitor device software install$6 inventor$4 plug$1in)	US-PGPUB; USPAT; USOCR; FPRS; EPO; JPO; DERWENT; IBM_TDB	OR	ON	2012/04/12 23:10
S23	0	(("20040172449" | "20050114711" | "20050138186" | "20050144195" | "20050144200" | "20050149481" | "20050256909" | "20060206533" | "20060277314" | "20070162510" | "20080104077" | "20090254592" | "6381019" | "6499054" | "6512586" | "6732158" | "6938042" | "7120692" | "7337171" | "7467187" | "7499905" | "7546353" | "7587467" | "7587471" | "7600036").PN.) and cloud	US-PGPUB; USPAT; USOCR; FPRS; EPO; JPO; DERWENT; IBM_TDB	OR	ON	2012/04/13 18:05
S24	1	(("20040172449" | "20050114711" | "20050138186" | "20050144195" | "20050144200" | "20050149481" | "20050256909" | "20060206533" | "20060277314" | "20070162510" | "20080104077" | "20090254592" | "6381019" | "6499054" | "6512586" | "6732158" | "6938042" | "7120692" | "7337171" | "7467187" | "7499905" | "7546353" | "7587467" | "7587471" | "7600036").PN.) and index	US-PGPUB; USPAT; USOCR; FPRS; EPO; JPO; DERWENT; IBM_TDB	OR	ON	2012/04/13 18:38
S25	31	(michael with abraham) and index	US-PGPUB; USPAT; USOCR; FPRS; EPO; JPO; DERWENT; IBM_TDB	OR	ON	2012/04/13 18:46
S26	25	(michael with abraham) and index and (scan$4 inventor$4 collect$4)	US-PGPUB; USPAT; USOCR; FPRS; EPO; JPO; DERWENT; IBM_TDB	OR	ON	2012/04/13 18:47
S27	4	(cloud$4 same storage same index$4).ti.	US-PGPUB; USPAT; USOCR; FPRS; EPO; JPO; DERWENT; IBM_TDB	OR	ON	2012/04/17 13:08

Dropbox Exhibit 1002 - Page 190
Dropbox, Inc. v. Entangled Media, LLC
IPR2024-00285 - U.S. Patent No. 8,484,260

S28	31	(cloud$4 same storage same index$4).ab.	US-PGPUB; USPAT; USOCR; FPRS; EPO; JPO; DERWENT; IBM_TDB	OR	ON	2012/04/17 14:34
S29	0	(cloud$4 same storage same index$4 same plug$1in).ab.	US-PGPUB; USPAT; USOCR; FPRS; EPO; JPO; DERWENT; IBM_TDB	OR	ON	2012/04/17 14:34
S30	62	(cloud$4 with storage with index$4)	US-PGPUB; USPAT; USOCR; FPRS; EPO; JPO; DERWENT; IBM_TDB	OR	ON	2012/04/17 15:19
S31	5	(cloud$4 with storage with index$4) and plug$1in	US-PGPUB; USPAT; USOCR; FPRS; EPO; JPO; DERWENT; IBM_TDB	OR	ON	2012/04/17 15:19
S40	21	("20100257142" "20100257403" "20100199042" "20100274765" "20100191783" "20100229108" "20110110568" "20110093471" "20090164790" "20100274762" "7636764").pn. and (cloud storage index$4 metadata device log$1in registrat$4 categ$7 class$10 group$4 down$1load$4 up$1load$4 creat$4 collect$4 replicas Redundant$4 duplicat$4 replicat$4)	US-PGPUB; USPAT; USOCR; FPRS; EPO; JPO; DERWENT; IBM_TDB	OR	ON	2012/04/17 22:18
S41	1	(scan$4 collect$4) with ((multipl$4 pluralit$4) near2 device) with (creat$4 near5 index$4)	US-PGPUB; USPAT; USOCR; FPRS; EPO; JPO; DERWENT; IBM_TDB	OR	ON	2012/04/17 22:38
S42	3	(("20040172449" | "20050114711" | "20050138186" | "20050144195" | "20050144200" | "20050149481" | "20050256909" | "20060206533" | "20060277314" | "20070162510" | "20080104077" | "20090254592" | "6381019" | "6499054" | "6512586" | "6732158" | "6938042" | "7120692" | "7337171" | "7467187" | "7499905" | "7546353" | "7587467" | "7587471" | "7600036").PN.) and (index$4)	US-PGPUB; USPAT; USOCR; FPRS; EPO; JPO; DERWENT; IBM_TDB	OR	ON	2012/04/17 22:40
S44	78	(scan$4 collect$4) with ((multipl$4 pluralit$4) near2 device) with index$4	US-PGPUB; USPAT; USOCR; FPRS; EPO; JPO;	OR	ON	2012/04/17 22:42

Dropbox Exhibit 1002 - Page 191
Dropbox, Inc. v. Entangled Media, LLC
IPR2024-00285 - U.S. Patent No. 8,484,260

			DERWENT; IBM_TDB			
S45	38	(scan$4 collect$4) near5 ((multipl$4 pluralit$4) near2 device) with index$4	US-PGPUB; USPAT; USOCR; FPRS; EPO; JPO; DERWENT; IBM_TDB	OR	ON	2012/04/17 22:42
S47	1	singlular near3 (file index$4)	US-PGPUB; USPAT; USOCR; FPRS; EPO; JPO; DERWENT; IBM_TDB	OR	ON	2012/04/18 14:07
S49	141	((set$1up request$4) near5 account$4) with up$1load$4	US-PGPUB; USPAT; USOCR; FPRS; EPO; JPO; DERWENT; IBM_TDB	OR	ON	2012/04/18 14:52
S50	6	((set$1up request$4) near5 account$4) with up$1load$4 with (categ$8 class$10 group$4)	US-PGPUB; USPAT; USOCR; FPRS; EPO; JPO; DERWENT; IBM_TDB	OR	ON	2012/04/18 14:53
S51	0	up$1load$4 with (categ$8 class$10 group$4) with cloud with index$4	US-PGPUB; USPAT; USOCR; FPRS; EPO; JPO; DERWENT; IBM_TDB	OR	ON	2012/04/18 19:57
S52	13	up$1load$4 with (categ$8 class$10 group$4) with cloud	US-PGPUB; USPAT; USOCR; FPRS; EPO; JPO; DERWENT; IBM_TDB	OR	ON	2012/04/18 19:57
S53	0	(cloud$4 same up$1load$4 same index$4).ti.	US-PGPUB; USPAT; USOCR; FPRS; EPO; JPO; DERWENT; IBM_TDB	OR	ON	2012/04/18 20:34
S54	1	(cloud$4 same up$1load$4 same index$4).ab.	US-PGPUB; USPAT; USOCR; FPRS; EPO; JPO; DERWENT; IBM_TDB	OR	ON	2012/04/18 20:34
S55	5	(storag$4 same up$1load$4 same index$4).ti.	US-PGPUB; USPAT; USOCR;	OR	ON	2012/04/18 20:35

Dropbox Exhibit 1002 - Page 192
Dropbox, Inc. v. Entangled Media, LLC
IPR2024-00285 - U.S. Patent No. 8,484,260

			FPRS; EPO; JPO; DERWENT; IBM_TDB			
S56	57	(storag$4 same up$1load$4 same index$4).ab.	US-PGPUB; USPAT; USOCR; FPRS; EPO; JPO; DERWENT; IBM_TDB	OR	ON	2012/04/18 20:39
S57	20	(storag$4 same up$1load$4 same index$4 same device).ab.	US-PGPUB; USPAT; USOCR; FPRS; EPO; JPO; DERWENT; IBM_TDB	OR	ON	2012/04/18 20:39
S62	1	"20120079117" and (pluralit$4 multipl$4 scan$4 collect$4 class$10 group$4 categ$8 index$4 registrat$4 log$1in device)	US-PGPUB; USPAT; USOCR; FPRS; EPO; JPO; DERWENT; IBM_TDB	OR	ON	2012/04/18 22:45
S63	3	(BLACKBURN with DAVID with A$1) and (storag$4 same up$1load$4 same index$4 same device) and (class$10 categ$7 group$4 device)	US-PGPUB; USPAT; USOCR; FPRS; EPO; JPO; DERWENT; IBM_TDB	OR	ON	2012/04/18 22:46
S67	2	("20110110568" "20120079117") and (pluralit$4 multipl$4 scan$4 collect$4 class$10 group$4 categ$8 index$4 registrat$4 log$1in device account$4 log$1in cloud$4 transfer$4)	US-PGPUB; USPAT; USOCR; FPRS; EPO; JPO; DERWENT; IBM_TDB	OR	ON	2012/04/18 23:30
S68	160	(set$1up$4 log$1in Account$4) near5 servic$4 near5 (cloud$4 back$1up)	US-PGPUB; USPAT; USOCR; FPRS; EPO; JPO; DERWENT; IBM_TDB	OR	ON	2012/04/19 10:44
S69	41	((set$1up$4 log$1in Account$4) near5 servic$4 near5 (cloud$4 back$1up)) and index$4	US-PGPUB; USPAT; USOCR; FPRS; EPO; JPO; DERWENT; IBM_TDB	OR	ON	2012/04/19 10:45
S70	19	((set$1up$4 log$1in Account$4) near5 servic$4 near5 (cloud$4 back$1up)) and index$4 and ((multipl$4 pluralit$4) near3 (unit device))	US-PGPUB; USPAT; USOCR; FPRS; EPO; JPO; DERWENT; IBM_TDB	OR	ON	2012/04/19 10:46
S71	19	((set$1up$4 log$1in Account$4) near5	US-PGPUB;	OR	ON	2012/04/19

Dropbox Exhibit 1002 - Page 193
Dropbox, Inc. v. Entangled Media, LLC
IPR2024-00285 - U.S. Patent No. 8,484,260

		servic$4 near5 (cloud$4 back$1up)) and index$4 and ((multipl$4 pluralit$4) near3 (unit device))	USPAT; USOCR; FPRS; EPO; JPO; DERWENT; IBM_TDB			14:21
S72	19	((set$1up$4 log$1in Account$4) near5 servic$4 near5 (cloud$4 back$1up)) and index$4 and ((multipl$4 pluralit$4) near3 (unit device)) and (class$10 categ$7 group$4)	US-PGPUB; USPAT; USOCR; FPRS; EPO; JPO; DERWENT; IBM_TDB	OR	ON	2012/04/19 14:22
S75	6	("20110110568" "20120079117" "20080082490" "20080005168") and (pluralit$4 multipl$4 scan$4 collect$4 class$10 group$4 categ$8 index$4 registrat$4 log$1in device account$4 log$1in cloud$4 transfer$4)	US-PGPUB; USPAT; USOCR; FPRS; EPO; JPO; DERWENT; IBM_TDB	OR	ON	2012/04/19 17:20
S77	6	("20110110568" "20120079117" "20080082490" "20080005168") and (pluralit$4 multipl$4 scan$4 collect$4 class$10 group$4 categ$8 index$4 registrat$4 log$1in device account$4 log$1in cloud$4 transfer$4 updat$4 modif$4 chang$4 individual$4 password)	US-PGPUB; USPAT; USOCR; FPRS; EPO; JPO; DERWENT; IBM_TDB	OR	ON	2012/04/19 22:52
S78	5	categor$7 near5 (document and video and (pictur$4 imag$4 photo) and (music))	US-PGPUB; USPAT; USOCR; FPRS; EPO; JPO; DERWENT; IBM_TDB	OR	ON	2012/04/20 10:55
S79	16	categor$7 near5 (document and video and (pictur$4 imag$4 photo) and (music audio))	US-PGPUB; USPAT; USOCR; FPRS; EPO; JPO; DERWENT; IBM_TDB	OR	ON	2012/04/20 10:57
S83	2	creat$4 near3 virtual near4 (represent$6 display$4) near5 data near5 devices with (metadata index$4)	US-PGPUB; USPAT; USOCR; FPRS; EPO; JPO; DERWENT; IBM_TDB	OR	ON	2012/04/20 12:23
S84	80	light$1weight$4 near5 metadata	US-PGPUB; USPAT; USOCR; FPRS; EPO; JPO; DERWENT; IBM_TDB	OR	ON	2012/04/20 12:26
S87	22	light$1weight$4 near5 metadata and index$4	US-PGPUB; USPAT; USOCR; FPRS; EPO; JPO; DERWENT;	OR	ON	2012/04/20 12:28

Dropbox Exhibit 1002 - Page 194
Dropbox, Inc. v. Entangled Media, LLC
IPR2024-00285 - U.S. Patent No. 8,484,260

			IBM_TDB			
S88	45	light$1weight$4 near5 metadata and virtual$4	US-PGPUB; USPAT; USOCR; FPRS; EPO; JPO; DERWENT; IBM_TDB	OR	ON	2012/04/20 12:29
S89	13	light$1weight$4 near5 metadata and virtual$4 and index$4	US-PGPUB; USPAT; USOCR; FPRS; EPO; JPO; DERWENT; IBM_TDB	OR	ON	2012/04/20 12:29
S90	5340	virtual$4 near5 store$3 near5 device	US-PGPUB; USPAT; USOCR; FPRS; EPO; JPO; DERWENT; IBM_TDB	OR	ON	2012/04/20 13:21
S91	37	(virtual$4 near5 store$3 near5 device) with metadata	US-PGPUB; USPAT; USOCR; FPRS; EPO; JPO; DERWENT; IBM_TDB	OR	ON	2012/04/20 13:22
S92	144	(virtual$4 near5 stor$5 near5 device) with metadata	US-PGPUB; USPAT; USOCR; FPRS; EPO; JPO; DERWENT; IBM_TDB	OR	ON	2012/09/06 19:43
S93	5	index$4 with (virtual$4 near5 stor$5 near5 device) with metadata	US-PGPUB; USPAT; USOCR; FPRS; EPO; JPO; DERWENT; IBM_TDB	OR	ON	2012/09/06 19:43
S99	72	(meta-index$4 meta$1index$4 index$4) with (virtual$4 near5 storage near5 device)	US-PGPUB; USPAT; USOCR; FPRS; EPO; JPO; DERWENT; IBM_TDB	OR	ON	2012/09/06 19:52
S101	5	(meta-index$4 meta$1index$4 index$4 metaindex$4) with (virtual$4 near5 storage near5 device) with metadata	US-PGPUB; USPAT; USOCR; FPRS; EPO; JPO; DERWENT; IBM_TDB	OR	ON	2012/09/06 19:53
S102	336	(scan$4 collect$4) with ((multipl$4 pluralit$4) near2 device) with software	US-PGPUB; USPAT; USOCR; FPRS;	OR	ON	2012/09/06 19:54

Dropbox Exhibit 1002 - Page 195
Dropbox, Inc. v. Entangled Media, LLC
IPR2024-00285 - U.S. Patent No. 8,484,260

			EPO; JPO; DERWENT; IBM_TDB			
S103	3	(scan$4 collect$4) with ((multipl$4 pluralit$4) near2 device) with software with $5index$4	US-PGPUB; USPAT; USOCR; FPRS; EPO; JPO; DERWENT; IBM_TDB	OR	ON	2012/09/06 19:55
S104	1	"12726412"	US-PGPUB; USPAT; USOCR; FPRS; EPO; JPO; DERWENT; IBM_TDB	OR	ON	2012/09/06 20:38
S111	161	michael with abraham	US-PGPUB; USPAT; USOCR; FPRS; EPO; JPO; DERWENT; IBM_TDB	OR	ON	2012/10/19 19:12
S112	374	707/827.ccls.	US-PGPUB; USPAT; USOCR; FPRS; EPO; JPO; DERWENT; IBM_TDB	OR	ON	2012/10/19 19:12
S113	888	717/176.ccls.	US-PGPUB; USPAT; USOCR; FPRS; EPO; JPO; DERWENT; IBM_TDB	OR	ON	2012/10/19 19:12
S114	9	erik with caso	US-PGPUB; USPAT; USOCR; FPRS; EPO; JPO; DERWENT; IBM_TDB	OR	ON	2012/10/19 19:12
S115	2	"20120179732"	US-PGPUB; USPAT; USOCR; FPRS; EPO; JPO; DERWENT; IBM_TDB	OR	ON	2012/10/19 19:13
S116	12	(("20040172449" | "20050114711" | "20050138186" | "20050144195" | "20050144200" | "20050149481" | "20050256909" | "20060206533" | "20060277314" | "20070162510" | "20080104077" | "20090254592" | "6381019" | "6499054" | "6512586" | "6732158" | "6938042" | "7120692" | "7337171" | "7467187" | "7499905" |	US-PGPUB; USPAT; USOCR; FPRS; EPO; JPO; DERWENT; IBM_TDB	OR	ON	2012/10/19 21:33

Dropbox Exhibit 1002 - Page 196
Dropbox, Inc. v. Entangled Media, LLC
IPR2024-00285 - U.S. Patent No. 8,484,260

		"7546353" | "7587467" | "7587471" | "7600036").PN.) and ((peer near4 peer))				
S123	2	"20110110568" and (cloud online offline metadata connect$4 disconnect$4 broke$4 p2p (peer near4 peer) request$4 download$4 transfer$5 server file software locat$4 determin$4 select$4 rout$4 internet$4 alternat$5)	US-PGPUB; USPAT; USOCR; FPRS; EPO; JPO; DERWENT; IBM_TDB	OR	ON	2012/10/20 14:00
S124	8591	(transfer$6 near3 file) near5 (((peer near4 peer) p2p) (intenet http))	US-PGPUB; USPAT; USOCR; FPRS; EPO; JPO; DERWENT; IBM_TDB	OR	ON	2012/10/20 15:06
S125	26	(transfer$6 near2 file) near5 (((peer near4 peer) p2p) (intenet http)) near5 alternat$5	US-PGPUB; USPAT; USOCR; FPRS; EPO; JPO; DERWENT; IBM_TDB	OR	ON	2012/10/20 15:07
S126	2	("20100017500").pn. and (online offline connect$4 transfer request$4)	US-PGPUB; USPAT; USOCR; FPRS; EPO; JPO; DERWENT; IBM_TDB	OR	ON	2012/10/20 16:53
S128	145	(p2p (peer near4 peer)) with (request$ near4 file) with transfer$4	US-PGPUB; USPAT; USOCR; FPRS; EPO; JPO; DERWENT; IBM_TDB	OR	ON	2012/10/20 17:19
S129	3	(p2p (peer near4 peer)) with (request$ near4 file) with transfer$4 with (offline disconnect$4 broke$4)	US-PGPUB; USPAT; USOCR; FPRS; EPO; JPO; DERWENT; IBM_TDB	OR	ON	2012/10/20 17:20
S130	14	(("20040172449" | "20050114711" | "20050138186" | "20050144195" | "20050144200" | "20050149481" | "20050256909" | "20060206533" | "20060277314" | "20070162510" | "20080104077" | "20090254592" | "6381019" | "6499054" | "6512586" | "6732158" | "6938042" | "7120692" | "7337171" | "7467187" | "7499905" | "7546353" | "7587467" | "7587471" | "7600036").PN.) and ((peer near4 peer)p2p disconnect$4 offline)	US-PGPUB; USPAT; USOCR; FPRS; EPO; JPO; DERWENT; IBM_TDB	OR	ON	2012/10/20 17:33
S131	75	("2005/0256909").URPN.	USPAT	OR	ON	2012/10/20 17:49
S132	1	"20050256909" and (request$4 select$4 updat$4 broker$4 p2p (peer near4 peer) connect$4 http chang$4 alternat$4 file)	USPAT	OR	ON	2012/10/20 21:02

Dropbox Exhibit 1002 - Page 197
Dropbox, Inc. v. Entangled Media, LLC
IPR2024-00285 - U.S. Patent No. 8,484,260

S133	1	"20050256909"	USPAT	OR	ON	2012/10/20 21:03
S134	48	(("20040172449" | "20050114711" | "20050138186" | "20050144195" | "20050144200" | "20050149481" | "20050256909" | "20060206533" | "20060277314" | "20070162510" | "20080104077" | "20090254592" | "6381019" | "6499054" | "6512586" | "6732158" | "6938042" | "7120692" | "7337171" | "7467187" | "7499905" | "7546353" | "7587467" | "7587471" | "7600036").PN.) and (request$4 select$4 updat$4 broker$4 p2p (peer near4 peer) connect$4 http chang$4 alternat$4 file offline online disconnect$4)	US-PGPUB; USPAT; USOCR; FPRS; EPO; JPO; DERWENT; IBM_TDB	OR	ON	2012/10/20 21:05
S135	698	(((peer near4 peer) p2p) with (request$4 near5 file))	US-PGPUB; USPAT; USOCR; FPRS; EPO; JPO; DERWENT; IBM_TDB	OR	ON	2012/10/20 21:53
S140	3	(((peer near4 peer) p2p) with (request$4 near5 file)) and (connect$4 near5 offline)	US-PGPUB; USPAT; USOCR; FPRS; EPO; JPO; DERWENT; IBM_TDB	OR	ON	2012/10/20 21:58
S142	289	((request$4 near5 file) near5 ((peer near4 peer) p2p)) and ((peer near4 peer) p2p) near5 connect$4	US-PGPUB; USPAT; USOCR; FPRS; EPO; JPO; DERWENT; IBM_TDB	OR	ON	2012/10/20 22:09
S143	26	((request$4 near5 file) near5 ((peer near4 peer) p2p)) and (((peer near4 peer) p2p) near5 connect$4) with (offline online disconnect$4)	US-PGPUB; USPAT; USOCR; FPRS; EPO; JPO; DERWENT; IBM_TDB	OR	ON	2012/10/20 22:11
S144	8963	(select$4 near5 method near5 transfer$4)	US-PGPUB; USPAT; USOCR; FPRS; EPO; JPO; DERWENT; IBM_TDB	OR	ON	2012/10/20 22:34
S145	0	(select$4 near5 method near5 transfer$4) with (((peer near4 peer) p2p) with (alternat$4 option))	US-PGPUB; USPAT; USOCR; FPRS; EPO; JPO; DERWENT; IBM_TDB	OR	ON	2012/10/20 22:35
S146	0	(select$4 near5 method near5 transfer$4) with (((peer near4 peer) p2p) same (alternat$4 option))	US-PGPUB; USPAT; USOCR;	OR	ON	2012/10/20 22:35

Dropbox Exhibit 1002 - Page 198
Dropbox, Inc. v. Entangled Media, LLC
IPR2024-00285 - U.S. Patent No. 8,484,260

			FPRS; EPO; JPO; DERWENT; IBM_TDB			
S147	6	("20080071907" "20040148434" "20100017500").pn. and ((peer near4 peer) p2p offline http)	US-PGPUB; USPAT; USOCR; FPRS; EPO; JPO; DERWENT; IBM_TDB	OR	ON	2012/10/20 23:51
S148	487	((peer near4 peer) p2p) near7 (connect$4 availabl$4) near7 ("yes" "no")	US-PGPUB; USPAT; USOCR; FPRS; EPO; JPO; DERWENT; IBM_TDB	OR	ON	2012/10/21 10:42
S149	24	((peer near4 peer) p2p) near7 (connect$4 availabl$4) near7 ("yes" "no") and web near9 transfer$4	US-PGPUB; USPAT; USOCR; FPRS; EPO; JPO; DERWENT; IBM_TDB	OR	ON	2012/10/21 10:42
S150	34	((peer near4 peer) p2p) near7 (connect$4 transfer$4) near7 availabl$4 and web near9 transfer$4	US-PGPUB; USPAT; USOCR; FPRS; EPO; JPO; DERWENT; IBM_TDB	OR	ON	2012/10/21 10:45
S152	3698	transfer$4 near3 (data file) with us$3 near5 (p2p http)	US-PGPUB; USPAT; USOCR; FPRS; EPO; JPO; DERWENT; IBM_TDB	OR	ON	2012/10/21 11:19
S153	10	transfer$4 near3 (data file) with us$3 near5 (p2p and http)	US-PGPUB; USPAT; USOCR; FPRS; EPO; JPO; DERWENT; IBM_TDB	OR	ON	2012/10/21 11:20
S154	3	"20060161585" and (p2p connect$6 identif$7 determin$4 availabl$4 request$4 retriev$4 server locat$4 file)	US-PGPUB; USPAT; USOCR; FPRS; EPO; JPO; DERWENT; IBM_TDB	OR	ON	2012/10/21 15:24
S155	3	"20060161585" and (p2p connect$6 identif$7 determin$4 availabl$4 request$4 retriev$4 server locat$4 file visual$4)	US-PGPUB; USPAT; USOCR; FPRS; EPO; JPO; DERWENT; IBM_TDB	OR	ON	2012/10/21 15:26

Dropbox Exhibit 1002 - Page 199
Dropbox, Inc. v. Entangled Media, LLC
IPR2024-00285 - U.S. Patent No. 8,484,260

10/21/2012 4:54:21 PM
C:\Users\bho\Documents\EAST\Workspaces\13424366.wsp

Dropbox Exhibit 1002 - Page 200
Dropbox, Inc. v. Entangled Media, LLC
IPR2024-00285 - U.S. Patent No. 8,484,260

Search Notes	Application/Control No.	Applicant(s)/Patent Under Reexamination
	13424366	CASO ET AL.
	Examiner	Art Unit
	BINH V HO	2163

SEARCHED			
Class	Subclass	Date	Examiner
707	827	10/20/2012	BH

SEARCH NOTES		
Search Notes	Date	Examiner
707/827; 717/176 East search (see printout)	10/20/2012	BH
East search (Inventors)	10/20/2012	BH
Interference East search (see Printout)	10/20/2012	BH
East search (U.S. Pub.)	10/20/2012	BH

INTERFERENCE SEARCH			
Class	Subclass	Date	Examiner

Dropbox Exhibit 1002 - Page 201
Dropbox, Inc. v. Entangled Media, LLC
IPR2024-00285 - U.S. Patent No. 8,484,260

Index of Claims	Application/Control No.	Applicant(s)/Patent Under Reexamination
	13424366	CASO ET AL.
	Examiner	**Art Unit**
	BINH V HO	2163

✓	Rejected	-	Cancelled	N	Non-Elected	A	Appeal
=	Allowed	÷	Restricted	I	Interference	O	Objected

☐ Claims renumbered in the same order as presented by applicant ☐ CPA ☐ T.D. ☐ R.1.47

CLAIM		DATE								
Final	Original	10/20/2012								
	1	✓								
	2	✓								
	3	✓								
	4	✓								
	5	✓								

Dropbox Exhibit 1002 - Page 202
Dropbox, Inc. v. Entangled Media, LLC
IPR2024-00285 - U.S. Patent No. 8,484,260

UNITED STATES PATENT AND TRADEMARK OFFICE

UNITED STATES DEPARTMENT OF COMMERCE
United States Patent and Trademark Office
Address: COMMISSIONER FOR PATENTS
P.O. Box 1450
Alexandria, Virginia 22313-1450
www.uspto.gov

APPLICATION NUMBER	FILING OR 371(C) DATE	FIRST NAMED APPLICANT	ATTY. DOCKET NO./TITLE
13/424,366	03/19/2012	Erik Caso	3689.001US2

CONFIRMATION NO. 5386

21186
SCHWEGMAN, LUNDBERG & WOESSNER, P.A.
P.O. BOX 2938
MINNEAPOLIS, MN 55402

POA ACCEPTANCE LETTER

OC000000055984931

Date Mailed: 08/17/2012

NOTICE OF ACCEPTANCE OF POWER OF ATTORNEY

This is in response to the Power of Attorney filed 08/03/2012.

The Power of Attorney in this application is accepted. Correspondence in this application will be mailed to the above address as provided by 37 CFR 1.33.

/tnnguyen/

Office of Data Management, Application Assistance Unit (571) 272-4000, or (571) 272-4200, or 1-888-786-0101

Dropbox Exhibit 1002 - Page 203
Dropbox, Inc. v. Entangled Media, LLC
IPR2024-00285 - U.S. Patent No. 8,484,260

UNITED STATES PATENT AND TRADEMARK OFFICE

UNITED STATES DEPARTMENT OF COMMERCE
United States Patent and Trademark Office
Address: COMMISSIONER FOR PATENTS
P.O. Box 1450
Alexandria, Virginia 22313-1450
www.uspto.gov

APPLICATION NUMBER	FILING OR 371(C) DATE	FIRST NAMED APPLICANT	ATTY. DOCKET NO./TITLE
13/424,366	03/19/2012	Erik Caso	ENT0001-DIV1

CONFIRMATION NO. 5386

74877
King and Spalding LLP
1700 Pennsylvania Ave, NW
Suite 200
Washington, DC 20006

POWER OF ATTORNEY NOTICE

OC000000055984903

Date Mailed: 08/17/2012

NOTICE REGARDING CHANGE OF POWER OF ATTORNEY

This is in response to the Power of Attorney filed 08/03/2012.

- The Power of Attorney to you in this application has been revoked by the assignee who has intervened as provided by 37 CFR 3.71. Future correspondence will be mailed to the new address of record(37 CFR 1.33).

/tnnguyen/

Office of Data Management, Application Assistance Unit (571) 272-4000, or (571) 272-4200, or 1-888-786-0101

Dropbox Exhibit 1002 - Page 204
Dropbox, Inc. v. Entangled Media, LLC
IPR2024-00285 - U.S. Patent No. 8,484,260

RECEIVED
CENTRAL FAX CENTER
AUG 0 3 2012

MODIFIED PTO/SB/80 (11-08)
Approved for use through 11/30/2011. OMB 0651-0035
U.S. Patent and Trademark Office; U.S. DEPARTMENT OF COMMERCE
Under the Paperwork Reduction Act of 1995, no persons are required to respond to a collection of information unless it displays a valid OMB control number.

POWER OF ATTORNEY TO PROSECUTE APPLICATIONS BEFORE THE USPTO

I hereby revoke all previous powers of attorney given in the application identified in the attached statement under 37 CFR 3.73(b).

I hereby appoint:

☒ Practitioners associated with the Customer Number: 21186

OR

☐ Practitioner(s) named below (If more than ten patent practitioners are to be named, then a customer number must be used.

Name	Registration Number	Name	Registration Number

as attorney(s) or agent(s) to represent the undersigned before the United States Patent and Trademark Office (USPTO) in connection with any and all patent applications assigned only to the undersigned according to the USPTO assignment records or assignment documents attached to this form in accordance with 37 CFR 3.73(b).

Please change the correspondence address for the application identified in the attached statement under 37 CFR 3.73(b) to:

☒ The address associated with Customer Number: 21186

OR

☐ Firm or Individual Name			
Address			
City		State	Zip
Country			
Telephone		Email	

Assignee Name and Address:
Entangled Media Corp.
606 Lake Street
#18
Huntington Beach, CA 92648
United States of America

A copy of this form, together with a statement under 37 CFR 3.73(b) (Form PTO/SB/96 or equivalent) is required to be filed in each application in which this form is used. The statement under 37 CFR 3.73(b) may be completed by one of the practitioners appointed in this form if the appointed practitioner is authorized to act on behalf of the assignee, and must identify the application in which this Power of Attorney is to be filed.

SIGNATURE of Assignee of Record

The individual whose signature and title is supplied below is authorized to act on behalf of the assignee

Signature	Erik Caso	Date:	8/1/12
Name	Erik Caso	Telephone:	714-975-3745
Title	CEO		

Any comments on the amount of time you require to complete this form and/or suggestions for reducing this burden, should be sent to the Chief Information Officer, U.S. Patent and Trademark Office, U.S. Department of Commerce, P.O. Box 1450, Alexandria, VA 22313-1450. DO NOT SEND FEES OR COMPLETED FORMS TO THIS ADDRESS. SEND TO: Commissioner for Patents, P.O. Box 1450, Alexandria, VA 22313-1450.

Dropbox Exhibit 1002 - Page 205
Dropbox, Inc. v. Entangled Media, LLC
IPR2024-00285 - U.S. Patent No. 8,484,260

RECEIVED
CENTRAL FAX CENTER
AUG 0 3 2012

(3/3) 08/03/2012 03:54:24 PM -0500

MODIFIED PTO/SB/96 (07-09)
Approved for use through 07/31/2012. OMB 0651-0031
U.S. Patent and Trademark Office; U.S. DEPARTMENT OF COMMERCE
Under the Paperwork Reduction Act of 1995, no persons are required to respond to a collection of information unless it displays a valid OMB control number.

STATEMENT UNDER 37 C.F.R. 3.73(b)

Applicant/Patent Owner: Erik Caso et al. Attorney Docket No. 3689.001US2
Application No./Patent No.: 13/424,366 Filed/Issue Date: March 19, 2012
Titled: Method For a Cloud-Based Meta-File System to Virtually Unify Remote and Local Files Across a Range of Devices' Local File Systems

Entangled Media Corp., a Corporation
(Name of Assignee) (Type of Assignee, e.g., corporation, partnership, university, government agency, etc.)

States that it is:

1. ☒ the assignee of the entire right, title, and interest in;

2. ☐ an assignee of less than the entire right, title, and interest in
(The extent (by percentage) of its ownership interest is _____ %); or

3. ☐ the assignee of an undivided interest in the entirety of (a complete assignment from one of the joint inventors was made)

the patent application/patent identified above, by virtue of either:

A. ☐ An assignment from the inventor(s) of the patent application/patent identified above. The assignment was recorded in the United States Patent and Trademark Office at Reel _____, Frame _____, or for which a copy therefore is attached.

OR

B. ☒ A chain of title from the inventor(s), of the patent application/patent identified above, to the current assignee as follows:

1. From: Erik Caso et al. To: Entangled Media LLC
The document was recorded in the United States Patent and Trademark Office at Reel 024338, Frame 0846 - 0850, or for which a copy thereof is attached.
2. From: Entangled Media LLC To: Entangled Media Corp.
The document was recorded in the United States Patent and Trademark Office at Reel 027246, Frame 0293 - 0298, or for which a copy thereof is attached.

☐ Additional documents in the chain of title are listed on a supplemental sheet(s).

☐ As required by 37 CFR 3.73(b)(1)(i), the documentary evidence of the chain of title from the original owner to the assignee was, or concurrently is being, submitted for recordation pursuant to 37 CFR 3.11.
[NOTE: A separate copy (*i.e.*, a true copy of the original assignment document(s)) must be submitted to Assignment Division in accordance with 37 CFR Part 3, to record the assignment in the records of the USPTO. See MPEP 302.08]

The undersigned (whose title is supplied below) is authorized to act on behalf of the assignee.

Signature — Date: 8/3/2012

Thierry Lo (Printed or Typed Name) — USPTO Reg. No. 49,097 (Title)

Any comments on the amount of time you require to complete this form and/or suggestions for reducing this burden, should be sent to the Chief Information Officer, U.S. Patent and Trademark Office, U.S. Department of Commerce, P.O. Box 1450, Alexandria, VA 22313-1450. DO NOT SEND FEES OR COMPLETED FORMS TO THIS ADDRESS. **SEND TO: Commissioner for Patents, P.O. Box 1450, Alexandria, VA 22313-1450.**

Dropbox Exhibit 1002 - Page 206
Dropbox, Inc. v. Entangled Media, LLC
IPR2024-00285 - U.S. Patent No. 8,484,260

RECEIVED
CENTRAL FAX CENTER
AUG 0 3 2012

SCHWEGMAN ▪ LUNDBERG ▪ WOESSNER
PATENT PROTECTION FOR HIGH TECHNOLOGY

P.O. Box 2938
Minneapolis, MN 55402
Telephone (612) 373-6900 Facsimile (612) 339-3061

Date: August 3, 2012

Time: 3:50 p.m.
(Minneapolis, Minn.)

TO: Commissioner for Patents
Patent Examining Corps
Facsimile Center
P.O. Box 1450
Alexandria, VA 22313-1450

FAX NUMBER 571-273-8300

FROM: Thierry Lo
OUR REF: 3689.001US2

Document(s) Transmitted: **Power of Attorney to Prosecute Applications before the USPTO (PTO/SB/80) (1 pg.), Statement Under 37 C.F.R. 3.73(b) (PTO/SB/96) (1 pg.)**

Total pages of this transmission, including cover letter: 3

If you do NOT receive all of the pages described above, please telephone us at 612-373-6900 or fax us at 612-339-3061.

In re. Patent Application of: Erik Caso et al.
Serial No.: 13/424,366
Filed: March 19, 2012
Title: Method For a Cloud-Based Meta-File System to Virtually Unify Remote and Local Files Across a Range of Devices' Local File Systems

Examiner: Unknown
Group Art Unit: Unknown
Docket No.: 3689.001US2

Please charge any additional fees or credit overpayment to Deposit Account No. 19-0743.

By: /Thierry Lo/
Name: Thierry Lo
USPTO Reg. No. 49,097

I hereby certify that this paper is being transmitted by facsimile to the U.S. Patent and Trademark Office on the date shown below.

/Mandy Brown/
Mandy Brown

August 3, 2012
Date of Transmission

Dropbox Exhibit 1002 - Page 207
Dropbox, Inc. v. Entangled Media, LLC
IPR2024-00285 - U.S. Patent No. 8,484,260

UNITED STATES PATENT AND TRADEMARK OFFICE

UNITED STATES DEPARTMENT OF COMMERCE
United States Patent and Trademark Office
Address: COMMISSIONER FOR PATENTS
P.O. Box 1450
Alexandria, Virginia 22313-1450
www.uspto.gov

APPLICATION NUMBER	FILING OR 371(C) DATE	FIRST NAMED APPLICANT	ATTY. DOCKET NO./TITLE
13/424,366	03/19/2012	Erik Caso	ENT0001-DIV1

CONFIRMATION NO. 5386

74877
King and Spalding LLP
1700 Pennsylvania Ave, NW
Suite 200
Washington, DC 20006

PUBLICATION NOTICE

OC000000055335482

Title: Method For a Cloud-Based Meta-File System to Virtually Unify Remote and Local Files Across a Range of Devices' Local File Systems

Publication No.US-2012-0179732-A1
Publication Date:07/12/2012

NOTICE OF PUBLICATION OF APPLICATION

The above-identified application will be electronically published as a patent application publication pursuant to 37 CFR 1.211, et seq. The patent application publication number and publication date are set forth above.

The publication may be accessed through the USPTO's publically available Searchable Databases via the Internet at www.uspto.gov. The direct link to access the publication is currently http://www.uspto.gov/patft/.

The publication process established by the Office does not provide for mailing a copy of the publication to applicant. A copy of the publication may be obtained from the Office upon payment of the appropriate fee set forth in 37 CFR 1.19(a)(1). Orders for copies of patent application publications are handled by the USPTO's Office of Public Records. The Office of Public Records can be reached by telephone at (703) 308-9726 or (800) 972-6382, by facsimile at (703) 305-8759, by mail addressed to the United States Patent and Trademark Office, Office of Public Records, Alexandria, VA 22313-1450 or via the Internet.

In addition, information on the status of the application, including the mailing date of Office actions and the dates of receipt of correspondence filed in the Office, may also be accessed via the Internet through the Patent Electronic Business Center at www.uspto.gov using the public side of the Patent Application Information and Retrieval (PAIR) system. The direct link to access this status information is currently http://pair.uspto.gov/. Prior to publication, such status information is confidential and may only be obtained by applicant using the private side of PAIR.

Further assistance in electronically accessing the publication, or about PAIR, is available by calling the Patent Electronic Business Center at 1-866-217-9197.

Office of Data Managment, Application Assistance Unit (571) 272-4000, or (571) 272-4200, or 1-888-786-0101

Dropbox Exhibit 1002 - Page 208
Dropbox, Inc. v. Entangled Media, LLC
IPR2024-00285 - U.S. Patent No. 8,484,260

PATENT APPLICATION FEE DETERMINATION RECORD

Substitute for Form PTO-875

Application or Docket Number: 13/424,366

APPLICATION AS FILED - PART I

FOR	(Column 1) NUMBER FILED	(Column 2) NUMBER EXTRA	SMALL ENTITY RATE($)	SMALL ENTITY FEE($)	OR	OTHER THAN SMALL ENTITY RATE($)	OTHER THAN SMALL ENTITY FEE($)
BASIC FEE (37 CFR 1.16(a), (b), or (c))	N/A	N/A	N/A	95		N/A	
SEARCH FEE (37 CFR 1.16(k), (i), or (m))	N/A	N/A	N/A	310		N/A	
EXAMINATION FEE (37 CFR 1.16(o), (p), or (q))	N/A	N/A	N/A	125		N/A	
TOTAL CLAIMS (37 CFR 1.16(i))	5 minus 20 =	*	x 30 =	0.00	OR		
INDEPENDENT CLAIMS (37 CFR 1.16(h))	1 minus 3 =	*	x 125 =	0.00			
APPLICATION SIZE FEE (37 CFR 1.16(s))	If the specification and drawings exceed 100 sheets of paper, the application size fee due is $310 ($155 for small entity) for each additional 50 sheets or fraction thereof. See 35 U.S.C. 41(a)(1)(G) and 37 CFR 1.16(s).			0.00			
MULTIPLE DEPENDENT CLAIM PRESENT (37 CFR 1.16(j))				0.00			
* If the difference in column 1 is less than zero, enter "0" in column 2.			TOTAL	530		TOTAL	

APPLICATION AS AMENDED - PART II

		(Column 1) CLAIMS REMAINING AFTER AMENDMENT		(Column 2) HIGHEST NUMBER PREVIOUSLY PAID FOR	(Column 3) PRESENT EXTRA	SMALL ENTITY RATE($)	SMALL ENTITY ADDITIONAL FEE($)	OR	OTHER THAN SMALL ENTITY RATE($)	OTHER THAN SMALL ENTITY ADDITIONAL FEE($)
AMENDMENT A	Total (37 CFR 1.16(i))	*	Minus	**	=	x =		OR	x =	
	Independent (37 CFR 1.16(h))	*	Minus	***	=	x =		OR	x =	
	Application Size Fee (37 CFR 1.16(s))									
	FIRST PRESENTATION OF MULTIPLE DEPENDENT CLAIM (37 CFR 1.16(j))							OR		
						TOTAL ADD'L FEE		OR	TOTAL ADD'L FEE	

		(Column 1) CLAIMS REMAINING AFTER AMENDMENT		(Column 2) HIGHEST NUMBER PREVIOUSLY PAID FOR	(Column 3) PRESENT EXTRA	RATE($)	ADDITIONAL FEE($)	OR	RATE($)	ADDITIONAL FEE($)
AMENDMENT B	Total (37 CFR 1.16(i))	*	Minus	**	=	x =		OR	x =	
	Independent (37 CFR 1.16(h))	*	Minus	***	=	x =		OR	x =	
	Application Size Fee (37 CFR 1.16(s))									
	FIRST PRESENTATION OF MULTIPLE DEPENDENT CLAIM (37 CFR 1.16(j))							OR		
						TOTAL ADD'L FEE		OR	TOTAL ADD'L FEE	

* If the entry in column 1 is less than the entry in column 2, write "0" in column 3.
** If the "Highest Number Previously Paid For" IN THIS SPACE is less than 20, enter "20".
*** If the "Highest Number Previously Paid For" IN THIS SPACE is less than 3, enter "3".
The "Highest Number Previously Paid For" (Total or Independent) is the highest found in the appropriate box in column 1.

UNITED STATES PATENT AND TRADEMARK OFFICE

UNITED STATES DEPARTMENT OF COMMERCE
United States Patent and Trademark Office
Address: COMMISSIONER FOR PATENTS
P.O. Box 1450
Alexandria, Virginia 22313-1450
www.uspto.gov

APPLICATION NUMBER	FILING or 371(c) DATE	GRP ART UNIT	FIL FEE REC'D	ATTY.DOCKET.NO	TOT CLAIMS	IND CLAIMS
13/424,366	03/19/2012		530	ENT0001-DIV1	5	1

CONFIRMATION NO. 5386

74877
King and Spalding LLP
1700 Pennsylvania Ave, NW
Suite 200
Washington, DC 20006

FILING RECEIPT

OC000000053413356

Date Mailed: 04/03/2012

Receipt is acknowledged of this non-provisional patent application. The application will be taken up for examination in due course. Applicant will be notified as to the results of the examination. Any correspondence concerning the application must include the following identification information: the U.S. APPLICATION NUMBER, FILING DATE, NAME OF APPLICANT, and TITLE OF INVENTION. Fees transmitted by check or draft are subject to collection. Please verify the accuracy of the data presented on this receipt. **If an error is noted on this Filing Receipt, please submit a written request for a Filing Receipt Correction. Please provide a copy of this Filing Receipt with the changes noted thereon. If you received a "Notice to File Missing Parts" for this application, please submit any corrections to this Filing Receipt with your reply to the Notice. When the USPTO processes the reply to the Notice, the USPTO will generate another Filing Receipt incorporating the requested corrections**

Applicant(s)

Erik Caso, Santa Monica, CA;
Michael Abraham, Boulder, CO;

Power of Attorney: The patent practitioners associated with Customer Number 74877

Domestic Priority data as claimed by applicant

This application is a DIV of 12/774,231 05/05/2010
which claims benefit of 61/175,489 05/05/2009

Foreign Applications (You may be eligible to benefit from the **Patent Prosecution Highway** program at the USPTO. Please see http://www.uspto.gov for more information.)

If Required, Foreign Filing License Granted: 03/28/2012

The country code and number of your priority application, to be used for filing abroad under the Paris Convention, is **US 13/424,366**

Projected Publication Date: 07/12/2012

Non-Publication Request: No

Early Publication Request: No
** **SMALL ENTITY** **

Dropbox Exhibit 1002 - Page 210
Dropbox, Inc. v. Entangled Media, LLC
IPR2024-00285 - U.S. Patent No. 8,484,260

Title

Method For a Cloud-Based Meta-File System to Virtually Unify Remote and Local Files Across a Range of Devices' Local File Systems

Preliminary Class

PROTECTING YOUR INVENTION OUTSIDE THE UNITED STATES

Since the rights granted by a U.S. patent extend only throughout the territory of the United States and have no effect in a foreign country, an inventor who wishes patent protection in another country must apply for a patent in a specific country or in regional patent offices. Applicants may wish to consider the filing of an international application under the Patent Cooperation Treaty (PCT). An international (PCT) application generally has the same effect as a regular national patent application in each PCT-member country. The PCT process **simplifies** the filing of patent applications on the same invention in member countries, but **does not result** in a grant of "an international patent" and does not eliminate the need of applicants to file additional documents and fees in countries where patent protection is desired.

Almost every country has its own patent law, and a person desiring a patent in a particular country must make an application for patent in that country in accordance with its particular laws. Since the laws of many countries differ in various respects from the patent law of the United States, applicants are advised to seek guidance from specific foreign countries to ensure that patent rights are not lost prematurely.

Applicants also are advised that in the case of inventions made in the United States, the Director of the USPTO must issue a license before applicants can apply for a patent in a foreign country. The filing of a U.S. patent application serves as a request for a foreign filing license. The application's filing receipt contains further information and guidance as to the status of applicant's license for foreign filing.

Applicants may wish to consult the USPTO booklet, "General Information Concerning Patents" (specifically, the section entitled "Treaties and Foreign Patents") for more information on timeframes and deadlines for filing foreign patent applications. The guide is available either by contacting the USPTO Contact Center at 800-786-9199, or it can be viewed on the USPTO website at http://www.uspto.gov/web/offices/pac/doc/general/index.html.

For information on preventing theft of your intellectual property (patents, trademarks and copyrights), you may wish to consult the U.S. Government website, http://www.stopfakes.gov. Part of a Department of Commerce initiative, this website includes self-help "toolkits" giving innovators guidance on how to protect intellectual property in specific countries such as China, Korea and Mexico. For questions regarding patent enforcement issues, applicants may call the U.S. Government hotline at 1-866-999-HALT (1-866-999-4158).

LICENSE FOR FOREIGN FILING UNDER

Title 35, United States Code, Section 184

Title 37, Code of Federal Regulations, 5.11 & 5.15

GRANTED

The applicant has been granted a license under 35 U.S.C. 184, if the phrase "IF REQUIRED, FOREIGN FILING LICENSE GRANTED" followed by a date appears on this form. Such licenses are issued in all applications where the conditions for issuance of a license have been met, regardless of whether or not a license may be required as

Dropbox Exhibit 1002 - Page 211
Dropbox, Inc. v. Entangled Media, LLC
IPR2024-00285 - U.S. Patent No. 8,484,260

set forth in 37 CFR 5.15. The scope and limitations of this license are set forth in 37 CFR 5.15(a) unless an earlier license has been issued under 37 CFR 5.15(b). The license is subject to revocation upon written notification. The date indicated is the effective date of the license, unless an earlier license of similar scope has been granted under 37 CFR 5.13 or 5.14.

This license is to be retained by the licensee and may be used at any time on or after the effective date thereof unless it is revoked. This license is automatically transferred to any related applications(s) filed under 37 CFR 1.53(d). This license is not retroactive.

The grant of a license does not in any way lessen the responsibility of a licensee for the security of the subject matter as imposed by any Government contract or the provisions of existing laws relating to espionage and the national security or the export of technical data. Licensees should apprise themselves of current regulations especially with respect to certain countries, of other agencies, particularly the Office of Defense Trade Controls, Department of State (with respect to Arms, Munitions and Implements of War (22 CFR 121-128)); the Bureau of Industry and Security, Department of Commerce (15 CFR parts 730-774); the Office of Foreign AssetsControl, Department of Treasury (31 CFR Parts 500+) and the Department of Energy.

NOT GRANTED

No license under 35 U.S.C. 184 has been granted at this time, if the phrase "IF REQUIRED, FOREIGN FILING LICENSE GRANTED" DOES NOT appear on this form. Applicant may still petition for a license under 37 CFR 5.12, if a license is desired before the expiration of 6 months from the filing date of the application. If 6 months has lapsed from the filing date of this application and the licensee has not received any indication of a secrecy order under 35 U.S.C. 181, the licensee may foreign file the application pursuant to 37 CFR 5.15(b).

SelectUSA

The United States represents the largest, most dynamic marketplace in the world and is an unparalleled location for business investment, innovation and commercialization of new technologies. The USA offers tremendous resources and advantages for those who invest and manufacture goods here. Through SelectUSA, our nation works to encourage, facilitate, and accelerate business investment. To learn more about why the USA is the best country in the world to develop technology, manufacture products, and grow your business, visit SelectUSA.gov.

PTO/SB/05 (08-08)
Approved for use through 06/30/2010. OMB 0651-0032
U.S. Patent and Trademark Office. U.S. DEPARTMENT OF COMMERCE
Under the Paperwork Reduction Act of 1995, no persons are required to respond to a collection of information unless it displays a valid OMB control number.

UTILITY PATENT APPLICATION TRANSMITTAL

(Only for new nonprovisional applications under 37 C.F.R. 1.53(b))

Attorney Docket No.	ENT0001-DIV1
First Inventor	Erik CASO, et al.
Title	METHOD FOR A CLOUD-BASED META-FILE SYSTEM TO VIRTUALLY UNIFY REMOTE AND LOCAL FILES ACROSS A RANGE OF DEVICES' LOCAL FILE SYSTEMS
Express Mail Label No.	

APPLICATION ELEMENTS

See MPEP chapter 600 concerning utility patent application contents.

1. ☐ **Fee Transmittal Form (e.g., PTO/SB/17)**
   (Submit an original and a duplicate for fee processing)
2. ☒ **Applicant claims small entity status.**
   See 37 CFR 1.27.
3. ☒ **Specification** [*Total Pages* 18]
   Both the claims and abstract must start on a new page
   (For information on the preferred arrangement, see MPEP 608.01(a))
4. ☒ **Drawing(s)** (*35 U.S.C.113*) [*Total Sheets* 6]
5. **Oath or Declaration** [*Total Sheets* 3]
   a. ☐ Newly executed (original or copy)
   b. ☒ A copy from a prior application (37 CFR 1.63 (d))
   (for a continuation/divisional with Box 18 completed)
   i. ☐ DELETION OF INVENTOR(S)
   Signed statement attached deleting inventor(s) named in the prior application, see 37 CFR 1.63(d)(2) and 1.33(b).
6. ☒ **Application Data Sheet.** See 37 CFR 1.76
7. ☐ **CD-ROM or CD-R** in duplicate, large table or Computer Program *(Appendix)*
   ☐ Landscape Table on CD
8. **Nucleotide and/or Amino Acid Sequence Submission**
   (if applicable, items a.-c. are required)
   a. ☐ Computer Readable Form (CRF)
   b. Specification Sequence Listing on:
   i. ☐ CD-ROM or CD-R (2 copies); or
   ii. ☐ Paper
   c. ☐ Statements verifying identity of above copies

ADDRESS TO:

Commissioner for Patents
P.O. Box 1450
Alexandria VA 22313-1450

ACCOMPANYING APPLICATIONS PARTS

9. ☐ **Assignment Papers** (cover sheet & document(s))
   Name of Assignee _____
10. ☐ **37 C.F.R. 3.73(b) Statement** ☐ **Power of Attorney**
    (when there is an assignee)
11. ☐ **English Translation Document** *(if applicable)*
12. ☒ **Information Disclosure Statement** (PTO/SB/08 or PTO-1449)
    ☐ Copies of citations attached
13. ☐ **Preliminary Amendment**
14. ☐ **Return Receipt Postcard** (MPEP 503)
    (Should be specifically itemized)
15. ☐ **Certified Copy of Priority Document(s)**
    (if foreign priority is claimed)
16. ☐ **Nonpublication Request** under 35 U.S.C. 122(b)(2)(B)(i).
    Applicant must attach form PTO/SB/35 or equivalent.
17. ☒ Other: Filed Electronically

18. If a CONTINUING APPLICATION, *check appropriate box, and supply the requisite information below and in the first sentence of the specification following the title, or in an Application Data Sheet under 37 CFR 1.76:*

☐ Continuation ☒ Divisional ☐ Continuation-in-part (CIP) of prior application No: 12 / 774,231

Prior application information: *Examiner* Binh Van Ho *Art Unit:* 2163

19. CORRESPONDENCE ADDRESS

☐ The address associated with Customer Number 74877 *OR* ☐ Correspondence address below

Name					
Address					
City		State		Zip Code	
Country		Telephone		Email	

Signature	/Dawn-Marie Bey/	Date	March 15, 2012
Name (Print/Type)	Dawn-Marie Bey	Registration No. (Attorney/Agent)	44,442

This collection of information is required by 37 CFR 1.53(b). The information is required to obtain or retain a benefit by the public which is to file (and by the USPTO to process) an application. Confidentiality is governed by 35 U.S.C. 122 and 37 CFR 1.11 and 1.14. This collection is estimated to take 12 minutes to complete, including gathering, preparing, and submitting the completed application form to the USPTO. Time will vary depending upon the individual case. Any comments on the amount of time you require to complete this form and/or suggestions for reducing this burden, should be sent to the Chief Information Officer, U.S. Patent and Trademark Office, U.S. Department of Commerce, P.O. Box 1450, Alexandria, VA 22313-1450. DO NOT SEND FEES OR COMPLETED FORMS TO THIS ADDRESS. **SEND TO: Mail Stop Patent Application, Commissioner for Patents, P.O. Box 1450, Alexandria, VA 22313-1450.**

If you need assistance in completing the form, call 1-800-PTO-9199 and select option 2.

METHOD FOR A CLOUD-BASED META-FILE SYSTEM TO VIRTUALLY UNIFY REMOTE AND LOCAL FILES ACROSS A RANGE OF DEVICES' LOCAL FILE SYSTEMS

Cross-Reference to Related Applications

[0001] The present application is a divisional of U.S. Application Serial No. 12/774,231, filed May 5, 2010, entitled "Method For a Cloud-Based Meta-File System to Virtually Unify Remote and Local Files Across a Range of Devices' Local File Systems," which claims the benefit of United States Provisional Patent Application Serial No. 61/175,489, filed May 5, 2009, entitled "Method For Virtual Synchronization Of Data Across Heterogeneous Devices And Performing On-Demand Transfer Of Remote Data Between Devices," both of which are incorporated herein by reference in their entirety.

Background of the Invention

Field of the Invention:

[0002] The present invention relates generally to the field of data virtualization and more specifically to a system and method for using data virtualization coupled with a cloud-based file system that is shared among devices and integrated into the device operating system so as to unify the representation of files across devices for availability of and access to data across multiple devices a user might own.

Description of the Related Art:

[0003] Competitive data synchronization products generally fall into one of two types: locally installed software for file replication across devices and online backup/storage based file replication across devices. The local install file replication software is installed on computers and makes sure that all devices with the same software have the same data physically replicated on each device. Once configured by the user, it is able to identify updates to files on one device and update the corresponding files on other devices. These products or services essentially duplicate all designated data between the devices being synchronized. Each file stored on N devices results in N duplicates of the same file. The online backup/storage based file replication

Dropbox Exhibit 1002 - Page 214
Dropbox, Inc. v. Entangled Media, LLC
IPR2024-00285 - U.S. Patent No. 8,484,260

software is a blend of software that installed on local devices along with online storage. The process requires that ALL designated data is stored online and is then in turn replicated across all devices that are connected to the online storage server. These services duplicate all designated data between devices being synchronized, AND store an additional copy on their servers. Each file stored on N devices results in N+ 1 duplicates of the same file.

Summary of the Invention

[0004] The most obvious shortcoming of the data synchronization implementations described above is the amount of storage space that is required. For individual users with multiple devices, each with varying storage capacity, synchronization across all devices for all content on all devices is limited or even prohibited by space restrictions. Additionally, present solutions to the storage problem can be expensive, requiring payment for third party on-line storage or device storage upgrades. It is also important to note that with other solutions the data on separate devices is kept separated when synchronized- local data is stored in a set of locations within the operating system's native file system (e.g. "My Documents", "My Pictures", etc.), while remote data on other devices or other online services is kept in a new location such as a new directory/folder or secondary location (e.g., removable hard drive) mounted on the device. Finally, present solutions generally require a high-degree of user involvement for their operation – users must designate certain files and/or directories for synchronization or backup, and must consciously store content to be synced or backed-up in those locations. Accordingly, there is a need in the art for a system and process that facilitates access to content that physically resides on any one of multiple user devices, e.g., laptop, desktop, personal digital assistant (PDA), cell phone or the like, from any one of the multiple user devices without the need to physically store all content on every device, and without complex configuration or continual interaction from the user and without the data from multiple devices being treated as separate and, thus, segregated within the file system as such.

[0005] As described in detail herein, the present solution creates a unified representation of all data on all registered devices – it ensures that all a user's devices appear to share one single native file system containing all the user's files across all devices, and that this file system is that of the device operating system, instead of any third party solution or secondary representation.

Dropbox Exhibit 1002 - Page 215
Dropbox, Inc. v. Entangled Media, LLC
IPR2024-00285 - U.S. Patent No. 8,484,260

Unlike the existing solutions, the implementations described herein do not require physical data replication across multiple devices. Instead, the present solution creates a virtual representation of data on all of the devices using metadata indexing. This virtual representation of data means that the files are not actually stored on all devices and thus, with the exception of a single physical location, they take up limited space (i.e. storage) on any additional device's hard drive. This allows for otherwise impossible amounts of data to be virtually stored on each device, even if there is no physical storage room available for the data on each device. Furthermore, the present solution does not require data to be stored on a provider server, but instead stores only lightweight metadata (small fraction of information about the files) online. The solution establishes the ability for user devices to be aware of one another and communicate directly when data is requested. In addition to user devices, the solution described herein can also incorporate files stored in an online service account, such as a photo account or video account (exemplary- YouTube.com or Picasa.com). Finally, beyond initial installation, the present solution requires no configuration or interaction with the user to virtualize any and all data across all devices. Rather than act as software that is interacted with by the user, the present solution is designed to integrate with the operating system on a device and thus modify said operating system to not only account for files that are stored locally on the device (e.g. on the hard drive), but also account files on all other devices the user may own. This is done without adding additional storage locations, such as a networked storage location or a sync folder; it is done without the user having to continually designate files for inclusion or exclusion. Moreover, it does not present the user with a new or additional user interface, but rather relies entirely on the device operating system for such user interaction.

[0006] The solution described herein unifies the representation of and access to files and data across all of a user's devices, as well as online service accounts.

[0007] In a first exemplary embodiment of the present invention a process for establishing a singular file system across multiple devices is described. The process includes: receiving user information to open an account for establishing a singular file system across multiple devices via a web-based system that includes at least one server; installing an individual software client on each of the multiple devices via the web-based system; accepting registration of multiple devices via the web-based system; scanning each of the multiple devices by each of the individual software clients to inventory data on each of the multiple devices and create a

Dropbox Exhibit 1002 - Page 216
Dropbox, Inc. v. Entangled Media, LLC
IPR2024-00285 - U.S. Patent No. 8,484,260

meta-index of the files for the inventoried data; providing by the individual software clients via the multiple devices individual meta-indices of the inventoried data for each of the multiple devices to the at least one server; integrating by the at least one server the individual meta-indices to create a single master meta-index; providing by the at least one server the single master meta-index to each of the multiple devices via the individual software clients; and continually updating the single master meta-index on the at least one server and each of the multiple devices in response to changes to the data indexed thereon.

[0008] In a second exemplary embodiment of the present invention a process for operating on files located on multiple devices using a singular file system is described. The process includes: accepting a request to operate on a file at a first device, wherein the file is selected from the singular file system on the first device; intercepting the request by a software client on the first device; determining by the software client if the file is physically located on the first device or a second device, wherein a visual representation of the singular file system on the first device is identical to a visual representation of the singular file system on the second device; if the file is physically located on a second device, requesting by the software client on the first device that a peer-to-peer connection be brokered by a server-based web service between the first device and the second device; if the peer-to-peer connection is brokered, transferring the physical file from the second device to the first device; and performing the operation on the file at the first device.

[0009] In a third exemplary embodiment, a system for establishing a singular file system across multiple devices is described. The system includes: a web-accessible server; at least one software client plug-in; multiple devices for storing and operating on files; wherein the web-accessible server receives user information to open an account for establishing a singular file system across multiple devices, installs the at least one software plug-in on each of the multiple devices, accepts registration of the multiple devices, wherein the at least one software plug-in varies in accordance with an operating system of each of the multiple devices; further wherein the at least one software client plug-in scans its respective one of the multiple devices to inventory files thereon, creates a meta-index to files for the inventoried data, provides the meta-index of the inventoried data for its respective one of the multiple devices to the web-accessible server; further wherein the web-accessible server receives meta-indices from each of the multiple devices and integrates by the meta-indices to create a single master meta-index, provides the

Dropbox Exhibit 1002 - Page 217
Dropbox, Inc. v. Entangled Media, LLC
IPR2024-00285 - U.S. Patent No. 8,484,260

single master meta-index to each of the multiple devices via the individual software clients, and continually updates the single master meta-index on each of the multiple devices in response to operations on the files indexed thereon.

Brief Description of the Figures

[0010] The following Figures are intended to be considered in conjunction with the descriptions provided herein and represent exemplary systems and processes of the present invention.

[0011] **Figure 1** is a schematic showing an exemplary configuration of the components of the invention;

[0012] **Figure 2** is a device registration and data virtualization process flow in accordance with an exemplary embodiment of the present invention;

[0013] **Figure 3** is a device registration and data virtualization process flow in accordance with an exemplary embodiment of the present invention;

[0014] **Figure 4** is a file retrieval process flow in accordance with an exemplary embodiment of the present invention;

[0015] **Figure 5** is a schematic showing the exemplary configuration of **Figure 1** with communication paths therebetween; and

[0016] **Figure 6** illustrates an exemplary unified file structure scenario.

Detailed Description of the Invention

[0017] The following words and phrases are used throughout this document and are attributed the definitions provided below for the purposes of describing the invention. One skilled in the art recognizes that there are obvious extensions to certain of these definitions and these are intended to fall within the scope of the listed definition, even if not explicitly reference therein.

[0018] Devices - Internet-enabled devices that may be used for a variety of communications and data purposes, including document creation, media players, Internet browsing, etc. These devices include desktop computers, laptop computers, netbooks, mobile

Dropbox Exhibit 1002 - Page 218
Dropbox, Inc. v. Entangled Media, LLC
IPR2024-00285 - U.S. Patent No. 8,484,260

Internet Devices (MlDs), smartphone mobile handsets, "nettop" computers, gaming consoles, cable set-top boxes, televisions and other computing devices and telecommunications devices that are able to communicate using any form of data communications protocols such as TCP/IP, 30, CDMA, GSM, OSM, WiFi, WiMax, etc.

[0019] File System – is the component within an operating system responsible for managing all manner of files, as well as presenting them within a graphical user interface. The native file system of any given operating system has a set of standard file storage options, such as "My Documents" for documents, "My Music" for music, "My Pictures" for pictures, and so on. Local file systems allow for secondary file systems to be "mounted" and even accommodate the tracking of such file, but in all cases are managed separately. An example of this would be a USB thumb drive, which, when plugged into a computer, is mounted as a secondary storage location.

[0020] Local Device - is a device that a user (person) is currently using (i.e. they are in front of the device and actively using it).

[0021] Remote Device - is a device that the user (person) is not using; this device is in another location and is only accessible via an Internet connection.

[0022] Software Client (or the Client) - is a piece of software that is installed and runs continuously on the device.

[0023] Web Service - is a part of the system that operates on the Internet and is made up of several types of web technologies including web servers, databases, peer-to-peer services (e.g., jingle, BitTorrent, Skype, JXTA), an HTTP Relay and other systems that interact with the clients. The web service acts as an information manager that coordinates information, communication and activities with the clients. It also coordinates the transfer of files between devices by establishing a transfer protocol, such as peer-to-peer or HTTP relay, or other such method, depending on the type of connection that is available for a given network or Internet connection.

[0024] Referring to **Figure 1** an exemplary system includes of a server **10** which hosts a web service and various user devices such as PDA **12**, laptop computer **14** and desktop computer **16** with a particular software client installed thereon, to facilitate the virtual unification of data,

Dropbox Exhibit 1002 - Page 219
Dropbox, Inc. v. Entangled Media, LLC
IPR2024-00285 - U.S. Patent No. 8,484,260

including documents and media files, across all devices **12, 14** and **16**. The system facilitates transfer of data (e.g. files) on-demand between devices when requested. The devices **12, 14** and **16** are merely exemplary and can vary in their number, type, use and operating system/platform, ranging from mobile phones to desktop computers to gaming consoles or cable set-top boxes, each running a different operating system that uses a proprietary and different file system. In addition to user devices, the solution described herein can also incorporate files stored in an online service account, such as a photo account or video account (exemplary- YouTube.com or Picasa.com). Additionally, though a single server is shown for illustration purposes, multiple servers, databases, processors may be used to implement the invention.

[0025] The system's method of data unification does not rely on file replication or cloning, but instead creates "virtual" file unification using a proprietary technique of differentiating local, physically stored data files versus remote data files and creating a unified, virtual representation of remote data on a local device. The system uses an operating-system extension, in conjunction with an intelligent web service, to determine the varying types of data that exist on each device that is a part of the system. The system will differentiate data on a Local Device from data on a Remote Device. The system then communicates to each client what data is remote so that each client can create the virtual representation of the remote data within its local device file system. The client creates the virtual representation of all remote files using the same "path" or storage location on the remote device, resulting in a common, single view of all data across all devices that is consistent with the formatting and structure of the local file system.

[0026] Critical to the unique nature of this system is that it is totally transparent, not requiring the user to interact with software, nor distinguish files in local vs. remote locations. All file metadata is integrated into the local device so that the view of data is common across all devices as if the files were actually stored locally across all devices, even though they are not. In essence, each device file system then acts as if it is a shared file system; enabling the local operating system to manage remote and local file as if they are all stored in the same location. For example, moving a file on one device results in the file moving on all other devices, even if it was moved on a device where that file is virtual.

Dropbox Exhibit 1002 - Page 220
Dropbox, Inc. v. Entangled Media, LLC
IPR2024-00285 - U.S. Patent No. 8,484,260

[0027] Referring to **Figure 2**, a detailed overview of a first exemplary process from user sign-up to virtual file access across devices is shown. In **S10**, access to the system is accomplished via creation of a user account with the provider of the service. Registration information includes user name, e-mail address and other required personal information as well as creation of user name and password to facilitate establishing and securing a user account. Once an account has been created, the user can install the required software client on each of their individual devices and initiate the process of registering each device with the service provider **S12**. As part of the registration process, for each individual user device, the user names the device, e.g., laptop, desktop, smartphone (e.g., Blackberry, Droid), and selects the type or category of data, e.g., documents (exemplary: text), pictures (exemplary: .jpg, .img), audio (exemplary: MP3), video (exemplary: .dvi, files .mov files) available on the device that the user wishes to virtually unify across multiple devices. In a preferred embodiment, all categories are automatically selected. Alternatively, this selection may be accomplished by a drop down menu listing file types, categories, extensions, etc. For online service accounts, the user registers these accounts and provides appropriate log-in information, e.g., username and password. As described below, once this selection is made, the installed software client then scans and inventories the selected data into a meta-index of the file system and reports back to the web service on that selected data **S14** in order to create a singular file system based on said metadata that is shared among all devices in the user's account. Alternatively, once the software client is installed on the user device, it could automatically scan and inventory all the data available on the user device and report back to the service provider. The web service can then create a listing of the inventory and prompt the user to select which data the user wishes to virtually synchronize.

[0028] The software client provides user device data in the form of a meta-index. For each identified data file, the meta-index includes metadata such as file name, file type, file size, local path the file is stored in, date created, date modified, etc. Once all of the user's devices and on-line service accounts are registered and meta-indexed by the software client **S16** (or the service provider in the case of the on-line service accounts by interacting through the respective application programming interfaces (APIs) of the on-line services to obtain data information), the web service integrates all of the individual meta-indices for all of the user's registered devices into a database **S18**. This master index of metadata thus becomes the singular file

Dropbox Exhibit 1002 - Page 221
Dropbox, Inc. v. Entangled Media, LLC
IPR2024-00285 - U.S. Patent No. 8,484,260

system that all devices use; integrated locally into a device's operating system via the software client. The web service then sends the meta-indices for each of the registered devices to each of the other individual registered user devices **S20**. At each registered local device, the software client integrates metadata from the remote device indices into the local device's file system **S22.** The metadata instructs the software client where to store the data files, ensuring that a common view and storage location is maintained across all devices. At this point, the local operating system's file system has been modified to include remote files in the same locations of the local device (such as the "My Documents" folder) as opposed to a separate and segregated location for such remote data (such as a synchronization folder or an additional hard drive "mounted" on the device.) Further, the software client facilitates the creation of a visual representation of the remote or virtual files on the local device, as if the files were indeed local, allowing the user to operate on them as if they were local to the device. The virtual files appear in essentially all ways the same as a local file, making them indistinguishable unless such a distinction is enabled as a separate option. Lastly, if a unique folder or directory exists on one device (e.g. within the My Documents folder) and has several files within it, that folder/directory is created on all other devices so that its files may be put within said folder/directory, ultimately representing the same path to all corresponding files.

[0029] Using their local device, the user attempts to operate on a file **S24**. If the file is a local file, physically located on the local device, the operation is performed on the local file and the software client notifies the web service to update the meta-index to reflect any changes to the attributes of the file, e.g., substantive, location or existence thereof **S26, S28**. If the user attempts an operation on a virtual file that is physically stored on a remote device, the software client intercepts the operation request and, if the file is to being opened or executed, the software client brokers a connection between the remote device containing the physical file and the local device requesting the file **S30**. The file is then transferred from the remote device to the local device and the operation is performed on the file at the local device. As in **S28**, details regarding the location, status, and existence of the file are provided to the web service by the local software client which allows all other devices being unified to be continuously made aware of the changes in the location or existence of the file **S30**. Once the file has been transferred from the remote device to the local device, it can be viewed, edited, or modified in any way by the user. Upon completion of any modification to the file, all changes are propagated back to the remote device

Dropbox Exhibit 1002 - Page 222
Dropbox, Inc. v. Entangled Media, LLC
IPR2024-00285 - U.S. Patent No. 8,484,260

and the local file is restored to its 'virtual' state. At this point the local device removes the aforementioned file from memory, so that it is stored only in the single location/device on which it was originally kept. Additionally, the aforementioned file's metadata is updated (such as "date last modified") and propagated to all other devices. The method of file transfer may vary, initially attempted via peer-to-peer methodology. Under certain circumstances, a peer-to-peer connection might be prohibited from occurring, at which point the web service will itself manage the connection (via HTTP Relay) between devices to ensure communication can always occur. Alternatively, for virtual files located with an on-line service provider, when the user attempts to operate thereon from a local device file system, a browser window is opened within the on-line service to facilitate operation.

[0030] **Figure 3** illustrates an alternative exemplary process flow. In this flow, which is substantially similar to the process flow from **Figure 2**, this flow illustrates the process flow wherein there is only a single registered user device and devices are added sequentially. After creating an account **S50**, the user registers a device **S52** and the downloaded software client creates a meta-index for the device data and stores in the web service database **S54**. If the user has no other registered devices ("NO" to **S56)**, when the user performs operations on device files **S64**, the answer to the question "Is the file a virtual file?" **S66**, will always be "NO" and the software client will report local file changes to the web service **S68**.

[0031] If the user does have other registered devices ("YES" to **S56**), the process **S58-S70** follows the same flow as steps **S20-S30** in **Figure 2**.

[0032] Accordingly, if a user has a desktop computer and laptop computer and a smartphone, the processes described herein essentially unify the data across those devices once they are registered them with the web service. The user can add and remove devices associated with their customer account at their convenience. The data that is unified across the devices correlates specifically to what devices the user adds to their customer account.

[0033] The embodiments described herein create a single unified file system that is shared across multiple devices a user might own. The software client provided by the web service to facilitate this unification is downloaded to a user's individual devices as described above. The software client is provided in the form of an operating system extension, or 'plug-in' that is unique to the type of device/operating system which is established at the time of

Dropbox Exhibit 1002 - Page 223
Dropbox, Inc. v. Entangled Media, LLC
IPR2024-00285 - U.S. Patent No. 8,484,260

registration. The plug-in modifies the natural behavior of the operating systems of the individual registered devices in a way that, as it pertains to remote files, prevents the operating system from doing what it normally does. This is akin to rewriting the behavior of the operating system itself and how it treats files and, thus, runs in a mode that *is* the operating system. This is different from software that runs in a mode that is secondary to the operating system's operations. The software client is responsible for at least: indexing the device data in a meta-index in accordance with user selection of data types; providing the meta-index for its device to the web service; receiving meta-index information for all other registered devices on the user's account; creating virtual files in the file system of its device in the file system format of its device; updating the file system of its device to reflect changes to all virtual (remote) files in accordance with meta-index changes provided by the web service; informing the web service of changes to local files; facilitating communications between its device and other registered devices to retrieve remote files for operation on the local device.

[0034] The virtual files appear to the user exactly as local files. For example, each virtual file includes a thumb nail with an icon, it would have the file name, the file size, the file type, the date it was created, the date it was modified, all that the physical file has except that it doesn't take any space on the local device with the exception of the space required for meta-data storage (less than 1 kilobyte per file). The virtual files act as mock files and mock the properties of the physical file. By way of example, if the physical file of File.DOC_{PHY} is located on the hard drive of Device A, a virtual file of File.DOC_{VIR} will be located in the same corresponding file directory of the hard drive on registered Device B and Device C. When the user moves File.DOC_{PHY} from its stored directory (e.g. …/My Documents/Proposals) on the hard drive of Device A to the desktop directory of Device A, this move will be indexed by the software client of Device A, provided to the web service, the user meta-index database at the web service will be updated to reflect the move, the software clients of Devices B and C will be notified of the move and the software clients of Devices B and C will updated Devices B and C, respectively, to show File.DOC_{VIR} on the desktops (or equivalent locations) thereof. Conversely, if the same actions were performed on a virtual file, instead of the physical file, the same corresponding routines and results would occur, thus ensuring that regardless of a user interacting with the physical or virtual version of a file, they are treated as if they were the same.

Dropbox Exhibit 1002 - Page 224
Dropbox, Inc. v. Entangled Media, LLC
IPR2024-00285 - U.S. Patent No. 8,484,260

[0035] The software client described herein acts as an operating system plug-in to intercept calls made to files and programs in the file system of the respective user devices. An exemplary description of software client functionality responsive to calls to the file system is described below and illustrated in **Figure 4**. When the user attempts to open a file on their local Device A **S100**, the application associated with the file, for example, Adobe Reader in the case of a .pdf file, talks to the file system and requests that the selected .pdf file be opened for read access **S105**. The software client intercepts this request from the operating system **S110** and checks its metadata to determine whether the selected file is a local file or a virtual file (remote file) **S115**.

[0036] In the case of a local file, there is no action required by the software client and the file system returns the command to the operating system to open the file **S120**. In the case of a virtual file, the software client on Device A determines from the file's metadata the remote device on which it is stored (Device B) and asks the web service to broker a connection between Device A and Device B **S125**. The web service determines what type of connection is possible between Device A and Device B and instructs both devices of the communication protocol and parameters to be used for the transfer. Initially, the web service determines if a peer-to-peer connection is available **S135**. If that peer to peer (p-to-p) connection is possible, Device B sends the physical file directly to Device A for operation on Device A **S140**. In instances where a p-to-p connection is not possible, e.g., due to firewall restrictions, the web service acts as an HTTP relay server **S145**. During the time that the request to Device B for the file transfer to Device A is happening, the operating system, and in turn the requesting application (Adobe Reader) has no idea that the requested file is not local to Device A and is simply waiting for that command to return the number of bytes that it requested so that it can display them. The software clients, in combination with the web service, transparently perform numerous commands to request, locate and retrieve a physical copy of the virtual file without the knowledge of the requesting application or operating system. Further, the entirety of the physical file need not be downloaded in order to be responsive to most actions, so, just as with streaming video, the underlying transfer continues while the user action is taking place with the initial buffer of required bytes (e.g., approximately 32 kilobytes per read operation in the case Adobe Reader running on Mac OS X, version 10.6) **S150**.

Dropbox Exhibit 1002 - Page 225
Dropbox, Inc. v. Entangled Media, LLC
IPR2024-00285 - U.S. Patent No. 8,484,260

[0037] **Figure 5** is a schematic exemplifying various devices as described with respect to **Figure 1** and connections between the devices constituting a user's closed data virtualization system in accordance with the descriptions herein.

[0038] In the exemplary embodiments described herein, the software clients recognize and account for differences in file structures and nomenclature. So, for example, documents stored in the "Documents" folder of a user's registered Mac would show up in the "My Documents" folder of a Windows system registered to the same user. The software client and web service perform a logical mapping between available desktop platforms, e.g., Windows, Mac, Linux. Figure **6** illustrates an exemplary unified file structure $\mathbf{20}_{\mathbf{UFS}}$ created from the individual device file structures $\mathbf{12}_{\mathbf{UFS}}$, $\mathbf{14}_{\mathbf{UFS}}$ and $\mathbf{16}_{\mathbf{UFS}}$ and on-line service file structure $\mathbf{18}_{\mathbf{UFS}}$ in accordance with the methods described herein. This unified file structure $\mathbf{20}_{\mathbf{UFS}}$ will replace file structures $\mathbf{12}_{\mathbf{UFS}}$, $\mathbf{14}_{\mathbf{UFS}}$ and $\mathbf{16}_{\mathbf{UFS}}$ in devices **12**, **14** and **16**. The file structure of on-line service **18** is not be unified.

[0039] Other than mapping between the 'canonical' elements of the file system, the software does not interfere with the user's choice of file locations. For example, if a registered user chooses to store music files in their Windows 'Desktop' folder, rather than under their 'My Music' folder, as is the convention, the software will respect their choice and make those files appear under the 'Desktop' folder of their other registered devices. Furthermore, the system is able to create unique directories on the device in order to maintain the appropriate path for a given file (in the case where a user manages their file system to have a naming system for how they store their files). In the specific cases where two devices each have a different file but with the same path, the system will employ a process for resolution. For example, the system may use a naming convention to resolve the collision and show both files on each device. For example, if there are 2 registered devices called 'Mac' and 'Windows', and a file called 'resume.doc' under 'Desktop' in both devices, the system creates 2 separate files on each device. On 'Mac', a local file called 'resume.doc' and a remote file called 'resume (Windows).doc' which is a virtual file on the local 'resume.doc' located on the 'Windows' device. On 'Windows', a local file called 'resume.doc' and a remote file called 'resume (Mac).doc which is a virtual file on the local 'resume.doc' located on the 'Mac' device. This resolution method is but one non-limiting example. One skilled in the art recognizes that other methodologies may be employed to resolve collisions in a transparent and completely automatic manner.

Dropbox Exhibit 1002 - Page 226
Dropbox, Inc. v. Entangled Media, LLC
IPR2024-00285 - U.S. Patent No. 8,484,260

[0040] For certain devices, the logical mapping is not as readily accomplished as it is with established operating systems such as Mac, Windows, and Linux. For example, while numerous mobile devices, gaming consoles, cable set top boxes, televisions and other computing devices and telecommunications devices can certainly store documents, pictures, video, music and the like, the operating systems, file structures and interfaces vary significantly from one another and from the established personal computer systems. Accordingly, when a user registers mobile devices such as the iPhone, Droid or other smart phones, the listing of virtual files in an established file directory may not be feasible. Accordingly, such devices may store all virtual files in an application that is downloaded as part of the software client. When a user wishes to access content that is physically stored on a different device, the user would search for the file in the dedicated software client application.

[0041] The software embodiments may include but are not limited to firmware, resident software, microcode, etc. Furthermore, the invention can take the form of a computer program product accessible from a computer-usable or computer-readable medium providing program code for use by or in connection with a computer or any instruction execution system. For the purposes of this description, a computer-usable or computer readable medium can be any tangible apparatus that can contain, store, communicate, propagate, or transport the program for use by or in connection with the instruction execution system, apparatus, or device. The medium can utilize electronic, magnetic, optical, electromagnetic, infrared, or semiconductor system (or apparatus or device) or a propagation medium (though propagation mediums in and of themselves as signal carriers are not included in the definition of physical computer-readable medium). Examples of a physical computer-readable medium include a semiconductor or solid state memory, magnetic tape, a removable computer diskette, a random access memory (RAM), a read-only memory (ROM), a rigid magnetic disk, and an optical disk. Current examples of optical disks include compact disk – read only memory (CD-ROM), compact disk – read/write (CD-R/W) and DVD.

[0042] A data processing system suitable for storing and/or executing program code includes at least one processor coupled directly or indirectly to memory elements through a system bus. The memory elements can include local memory employed during actual execution of the program code, bulk storage, and cache memories that provide temporary storage of at least some program code in order to reduce the number of times code must be retrieved from bulk

Dropbox Exhibit 1002 - Page 227
Dropbox, Inc. v. Entangled Media, LLC
IPR2024-00285 - U.S. Patent No. 8,484,260

storage during execution. Input/output or I/O devices (including but not limited to keyboards, displays, pointing devices, etc.) can be coupled to the system either directly or through intervening I/O controllers. Network adapters may also be coupled to the system to enable the data processing system to become coupled to other data processing systems or remote printers or storage devices through intervening private or public networks, including various client-server configurations. Modems, cable modem, and Ethernet cards are just a few of the currently available types of network adapters.

[0043] Moreover, the disclosed processes may be readily implemented in software, e.g., as a computer program product having one or more modules each adapted for one or more functions of the software, executed on a programmed general purpose computer, cellular telephone, PDA, a special purpose computer, a microprocessor, or the like. In these instances, the systems and methods of this invention can be implemented as a program embedded on a personal computer such as a JAVA, CGI or Perl script, as a resource residing on a server or graphics workstation, as a routine embedded in a dedicated image system, or the like. The systems and methods of this invention can also be implemented by physically incorporating this system and method into a software and/or hardware system, such as the hardware and software systems of a computer. Such computer program products and systems can be distributed and employ a client-server architecture, a peer-to-peer network or a combination thereof.

[0044] It is to be appreciated that the various components of the technology can be located at distant portions of a distributed network and/or the Internet, or within a dedicated secure, unsecured and/or encrypted system. Thus, it should be appreciated that the components of the system can be combined into one or more devices or co-located on a particular node of a distributed network, such as a telecommunications network. As will be appreciated from the description, and for reasons of computational efficiency, the components of the system can be arranged at any location within a distributed network without affecting the operation of the system. Moreover, the components could be embedded in a dedicated machine.

[0045] Furthermore, it should be appreciated that the various links connecting the elements can be wired or wireless links, or any combination thereof, or any other known or later developed element(s) that is capable of supplying and/or communicating data to and from the connected elements. The terms software client and web service as used herein can refer to any

Dropbox Exhibit 1002 - Page 228
Dropbox, Inc. v. Entangled Media, LLC
IPR2024-00285 - U.S. Patent No. 8,484,260

known or later developed hardware, software, firmware, or combination thereof that is capable of performing the functionality associated with that element.

[0046] While embodiments of this disclosure have been depicted, described, and are defined by reference to example embodiments of the disclosure, such references do not imply a limitation on the disclosure, and no such limitation is to be inferred. The subject matter disclosed is capable of considerable modification, alteration, and equivalents in form and function, as will occur to those ordinarily skilled in the pertinent art and having the benefit of this disclosure. The depicted and described embodiments of this disclosure are examples only, and are not exhaustive of the scope of the disclosure.

Dropbox Exhibit 1002 - Page 229
Dropbox, Inc. v. Entangled Media, LLC
IPR2024-00285 - U.S. Patent No. 8,484,260

Claims:

1. A process for operating on files located on multiple devices using a singular file system comprising:

accepting a request to operate on a file at a first device, wherein the file is selected from the singular file system on the first device;

intercepting the request by a software client on the first device;

determining by the software client if the file is physically located on the first device or a second device, wherein a visual representation of the singular file system on the first device is identical to a visual representation of the singular file system on the second device;

if the file is physically located on a second device, requesting by the software client on the first device that a peer-to-peer connection be brokered by a server-based web service between the first device and the second device;

if the peer-to-peer connection is brokered, transferring the physical file from the second device to the first device; and

performing the operation on the file at the first device.

2. The process according to claim 1, wherein if the peer-to-peer connection cannot be brokered between the first device and the second device, an alternative connection is established by the server-based web service.

3. The process according to claim 2, wherein the alternative connection is an HTTP relay.

4. The process according to claim 1, wherein the software client determines if the file is physically located on the first device or a second device by reviewing file metadata.

5. The process according to claim 1, further comprising updating metadata of the singular file system on the first device and the second device to reflect a change in physical location of the file from the second device to the second device.

Dropbox Exhibit 1002 - Page 230
Dropbox, Inc. v. Entangled Media, LLC
IPR2024-00285 - U.S. Patent No. 8,484,260

ABSTRACT

A system and process that establish a singular shared file system among devices in order to create a virtual representation of data on all of the devices via metadata indexing. This virtual representation of data means that the files are not actually stored on all devices and thus, with the exception of a single physical location, they do not need to take up any space (i.e. storage) on any additional device's hard drive. This allows for significant amounts of data to be virtually stored on each device, even if there is no physical storage room available for the data on each device. The system and process do not require data to be stored on a provider server, but instead stores only lightweight metadata, i.e., a small fraction of information about the files, online.

Dropbox Exhibit 1002 - Page 231
Dropbox, Inc. v. Entangled Media, LLC
IPR2024-00285 - U.S. Patent No. 8,484,260

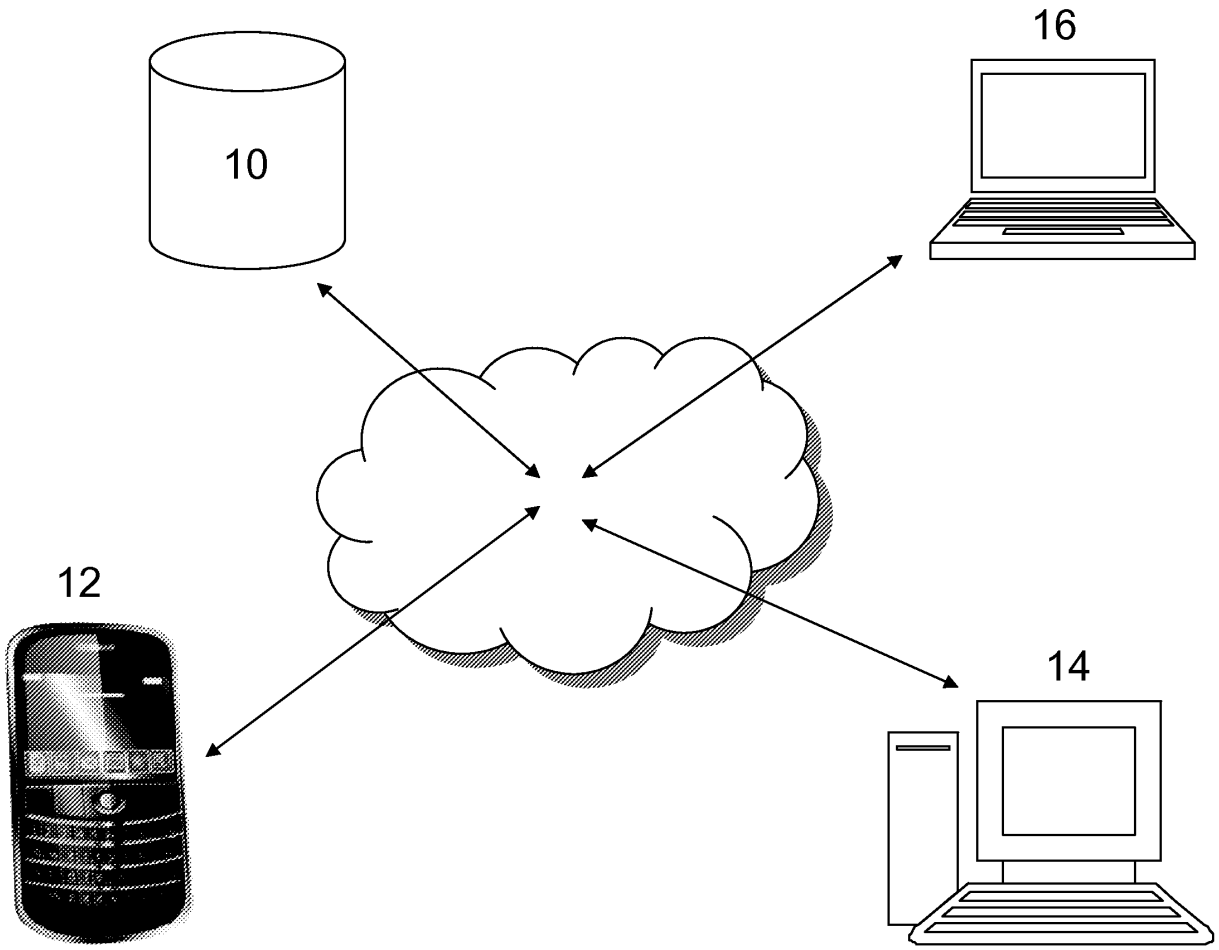

Figure 1

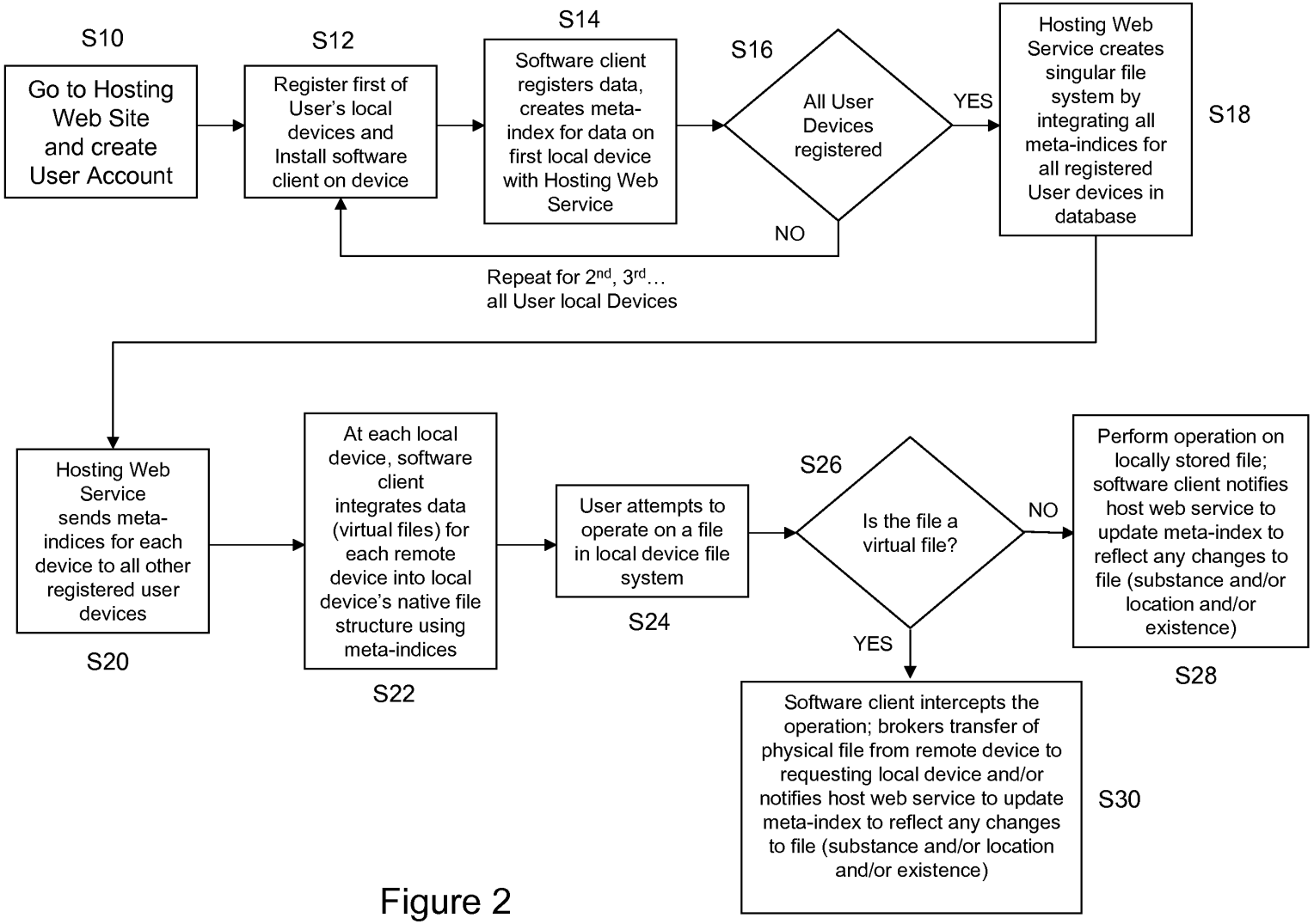
S10
Go to Hosting Web Site and create User Account
S12
Register first of User's local devices and Install software client on device
S14
Software client registers data, creates meta-index for data on first local device with Hosting Web Service
S16
All User Devices registered
YES
NO
Repeat for 2nd, 3rd… all User local Devices
Hosting Web Service creates singular file system by integrating all meta-indices for all registered User devices in database
S18
Hosting Web Service sends meta-indices for each device to all other registered user devices
S20
At each local device, software client integrates data (virtual files) for each remote device into local device's native file structure using meta-indices
S22
User attempts to operate on a file in local device file system
S24
S26
Is the file a virtual file?
NO
YES
Perform operation on locally stored file; software client notifies host web service to update meta-index to reflect any changes to file (substance and/or location and/or existence)
S28
Software client intercepts the operation; brokers transfer of physical file from remote device to requesting local device and/or notifies host web service to update meta-index to reflect any changes to file (substance and/or location and/or existence)
S30

Figure 2

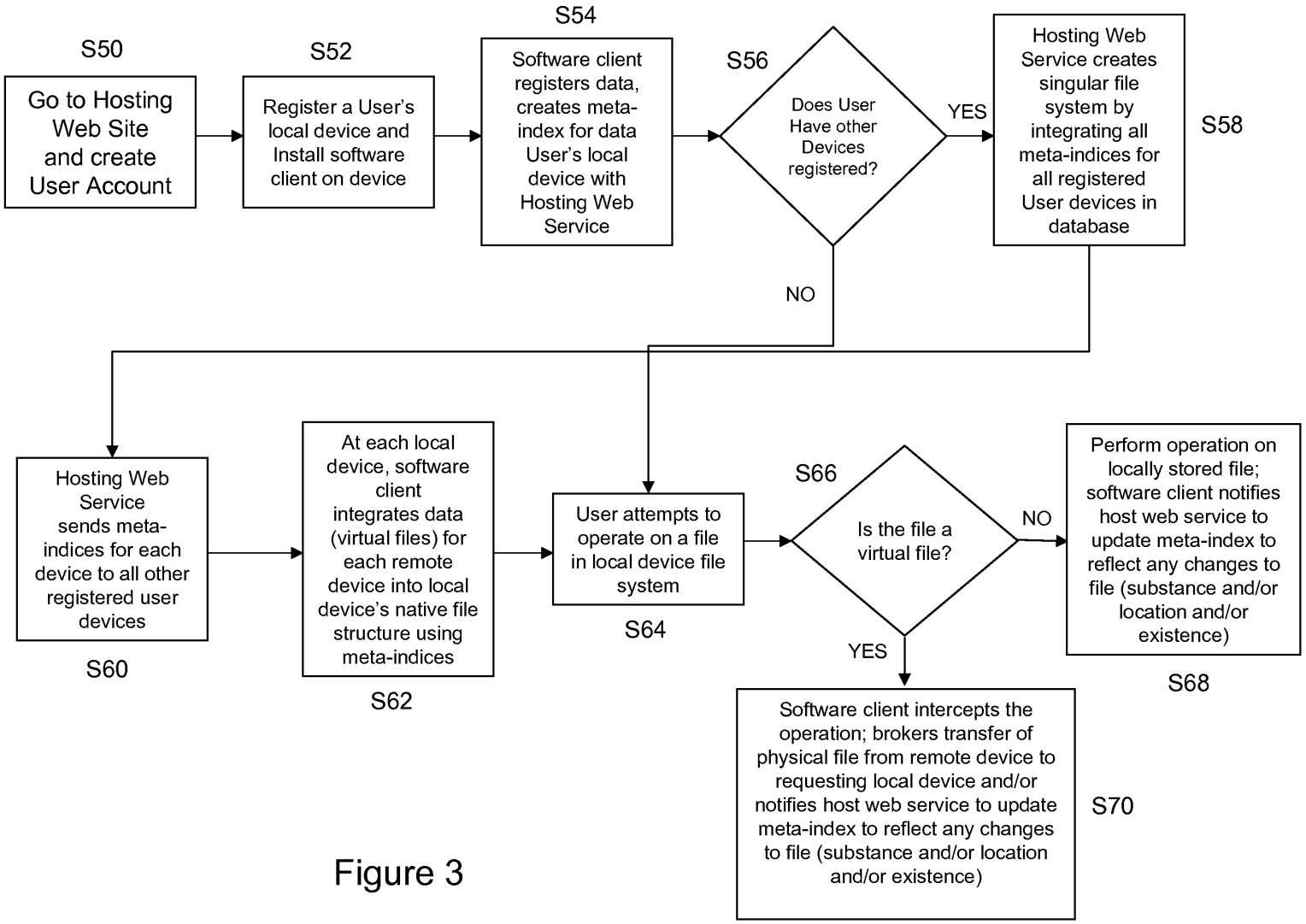
S50
Go to Hosting Web Site and create User Account
S52
Register a User's local device and Install software client on device
S54
Software client registers data, creates meta-index for data User's local device with Hosting Web Service
S56
Does User Have other Devices registered?
YES
Hosting Web Service creates singular file system by integrating all meta-indices for all registered User devices in database
S58
NO
Hosting Web Service sends meta-indices for each device to all other registered user devices
S60
At each local device, software client integrates data (virtual files) for each remote device into local device's native file structure using meta-indices
S62
User attempts to operate on a file in local device file system
S64
S66
Is the file a virtual file?
NO
Perform operation on locally stored file; software client notifies host web service to update meta-index to reflect any changes to file (substance and/or location and/or existence)
S68
YES
Software client intercepts the operation; brokers transfer of physical file from remote device to requesting local device and/or notifies host web service to update meta-index to reflect any changes to file (substance and/or location and/or existence)
S70

Figure 3

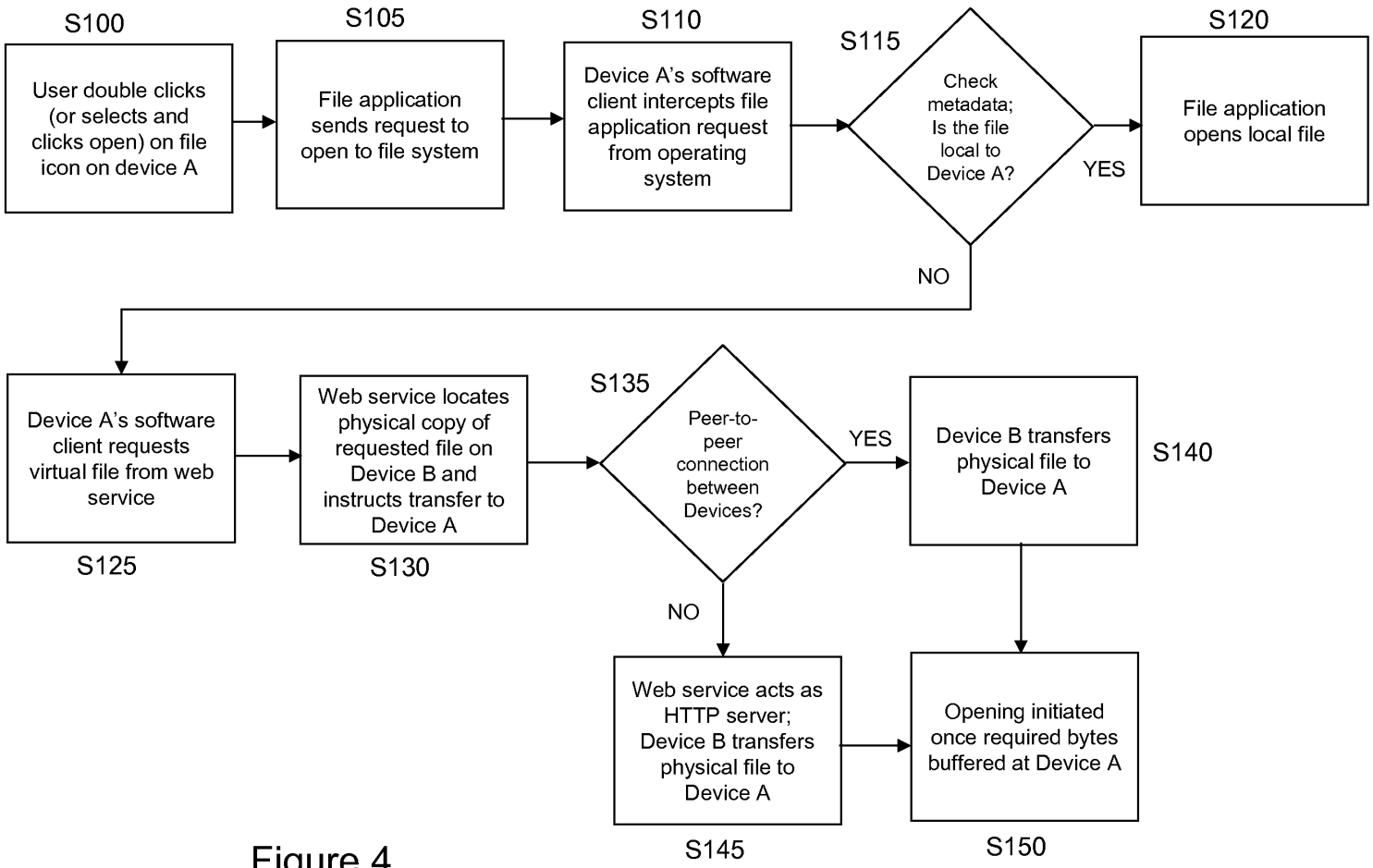
S100
User double clicks (or selects and clicks open) on file icon on device A
S105
File application sends request to open to file system
S110
Device A's software client intercepts file application request from operating system
S115
Check metadata; Is the file local to Device A?
YES
S120
File application opens local file
NO
Device A's software client requests virtual file from web service
S125
Web service locates physical copy of requested file on Device B and instructs transfer to Device A
S130
S135
Peer-to-peer connection between Devices?
YES
Device B transfers physical file to Device A
S140
NO
Web service acts as HTTP server; Device B transfers physical file to Device A
S145
Opening initiated once required bytes buffered at Device A
S150

Figure 4

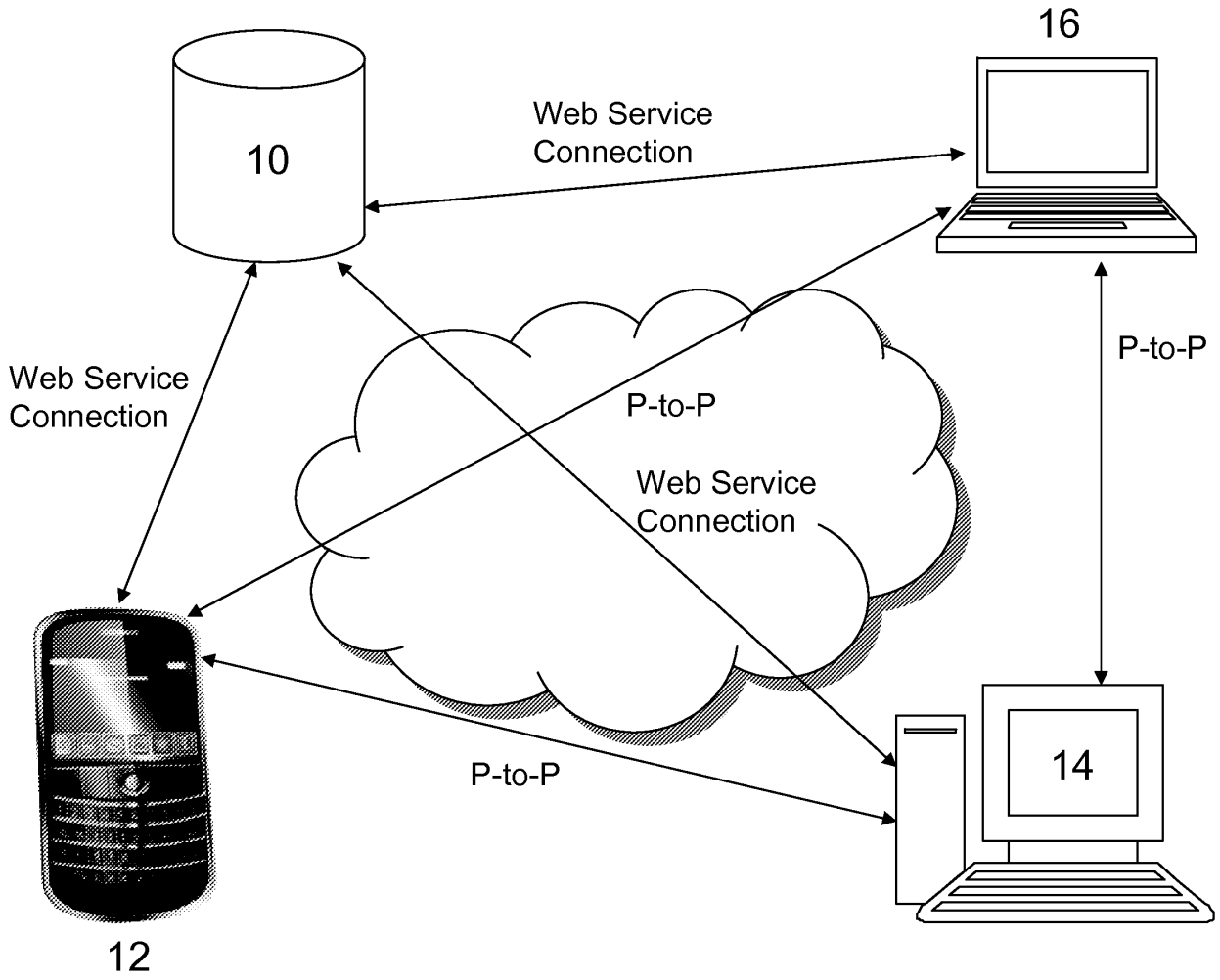
16
10
Web Service
Connection
Web Service
Connection
P-to-P
P-to-P
Web Service
Connection
P-to-P
14
12

Figure 5

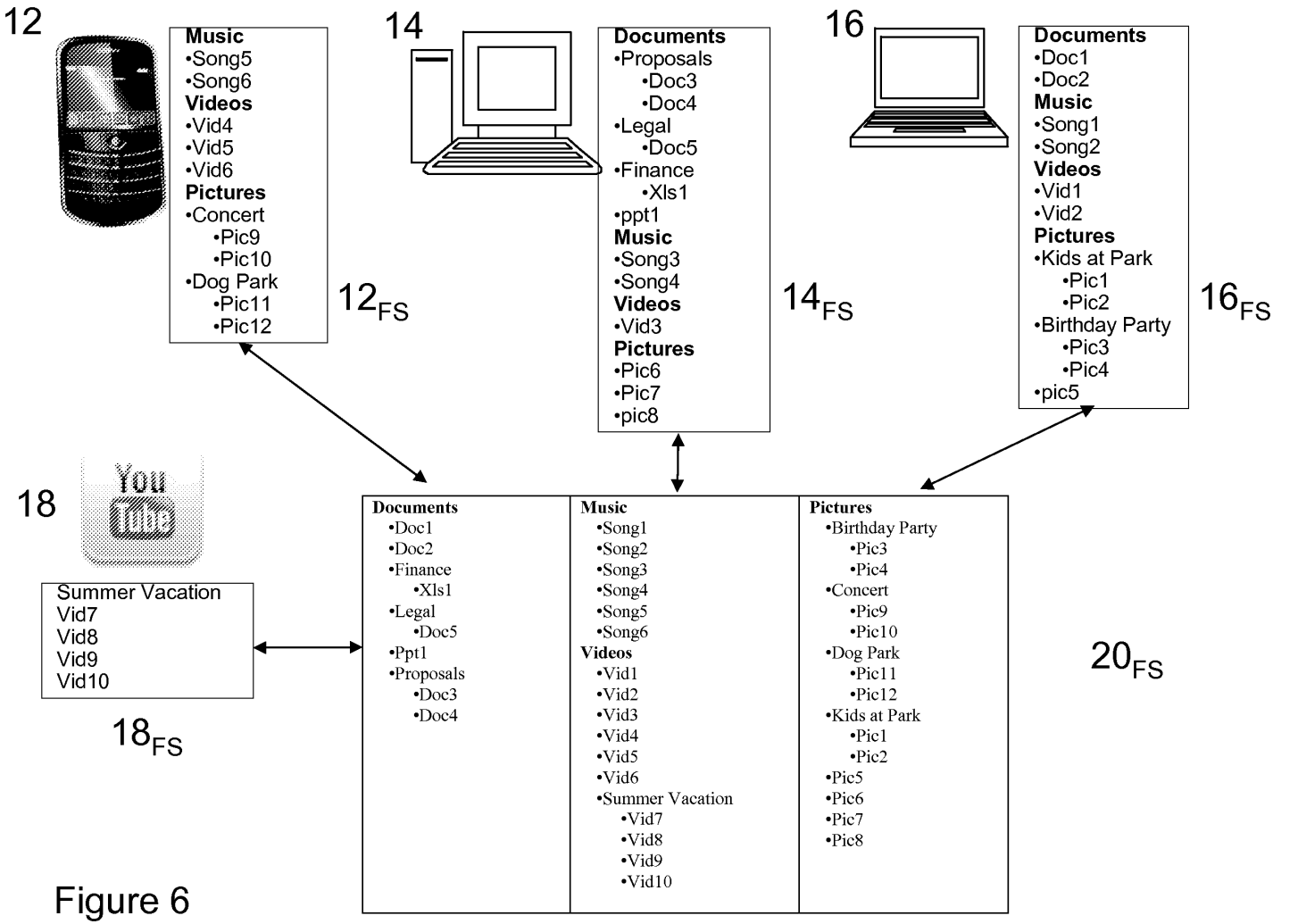
12
Music
•Song5
•Song6
Videos
•Vid4
•Vid5
•Vid6
Pictures
•Concert
•Pic9
•Pic10
•Dog Park
•Pic11
•Pic12
12FS
14
Documents
•Proposals
•Doc3
•Doc4
•Legal
•Doc5
•Finance
•Xls1
•ppt1
Music
•Song3
•Song4
Videos
•Vid3
Pictures
•Pic6
•Pic7
•pic8
14FS
16
Documents
•Doc1
•Doc2
Music
•Song1
•Song2
Videos
•Vid1
•Vid2
Pictures
•Kids at Park
•Pic1
•Pic2
•Birthday Party
•Pic3
•Pic4
•pic5
16FS
18
Summer Vacation
Vid7
Vid8
Vid9
Vid10
18FS
Documents
•Doc1
•Doc2
•Finance
•Xls1
•Legal
•Doc5
•Ppt1
•Proposals
•Doc3
•Doc4
Music
•Song1
•Song2
•Song3
•Song4
•Song5
•Song6
Videos
•Vid1
•Vid2
•Vid3
•Vid4
•Vid5
•Vid6
•Summer Vacation
•Vid7
•Vid8
•Vid9
•Vid10
Pictures
•Birthday Party
•Pic3
•Pic4
•Concert
•Pic9
•Pic10
•Dog Park
•Pic11
•Pic12
•Kids at Park
•Pic1
•Pic2
•Pic5
•Pic6
•Pic7
•Pic8
20FS

Figure 6

COMBINED DECLARATION AND POWER OF ATTORNEY FOR PATENT APPLICATION

☒ Original ☐ Supplemental ☐ Substitute ☐ PCT

As a below named inventor, I hereby declare that:

My residence, post office address and citizenship are as stated below next to my name.

I believe I am the original, first and sole inventor (if only one name is listed below), or an original, first and joint inventor (if plural names are listed below) of the subject matter which is claimed and for which a patent is sought on the invention entitled:

METHOD FOR A CLOUD-BASED META-FILE SYSTEM TO VIRTUALLY UNIFY REMOTE AND LOCAL FILES ACROSS A RANGE OF DEVICES' LOCAL FILE SYSTEMS

(Title of the Invention)

the specification of which (check one)

☒ is attached hereto

☐ was filed on _____, as U.S. Application Serial Number _____ or PCT International Application Number _____ and was amended _____ (if applicable).

I hereby state that I have reviewed and understand the contents of the above-identified specification, including the claims, as amended by any amendment referred to above.

I acknowledge the duty to disclose information which is material to the patentability of this application in accordance with Title 37, Code of Federal Regulations, § 1.56(a).

I hereby claim foreign priority benefits under Title 35, United States Code, § 119 (a) - (d) or § 365(b) of any foreign application(s) for patent or inventor's certificate, or § 365(a) of any PCT international application which designated at least one country other than the United States of America, listed below and have also identified, by checking the box below, any foreign application for patent or inventor's certificate, or of any PCT international application having a filing date before that of the application on which priority is claimed.

Prior Foreign Applications			Priority Claimed		Copy Attached	
Application Number	Country	Foreign Filing Date (MM/DD/YYYY)	YES	NO	YES	NO

I authorize the U.S. attorneys or agents associated with the customer number provided below to accept and follow instructions from my employer (if I am an employee and this application has been or will be assigned to my employer) or the entity with which I have contracted (if I am an independent contractor and this application has been or will be assigned to such entity), as to any action to be taken in the United States Patent and Trademark Office regarding this application

Dropbox Exhibit 1002 - Page 238
Dropbox, Inc. v. Entangled Media, LLC
IPR2024-00285 - U.S. Patent No. 8,484,260

without direct communication between the U.S. attorney or agent and the undersigned. In the event of a change in the persons from whom instructions may be taken, the U.S. attorneys or agents associated with the customer number provided below will be so notified by the undersigned.

As a named inventor, I hereby revoke all prior powers and appoint the practitioners associated with **Customer Number 74877** prosecute this application and transact all business in the United States Patent and Trademark Office connected therewith.

I acknowledge that the attorneys and agents associated with the aforementioned customer number are with King & Spalding LLP and represent my employer (if I am an employee and this application has been or will be assigned to my employer) or the entity with which I have contracted (if I am an independent contractor and this application has been or will be assigned to such entity) and in such cases do not represent me individually. I further acknowledge I have not established, nor will I seek to establish, any personal attorney/client relationship with King & Spalding LLP in connection with this application and understand that, should I require legal representation, I will obtain such, at my expense, other than through King & Spalding LLP.

Please recognize or change the correspondence address for the above-identified application to the address associated with the above-mentioned Customer Number 74877.

Direct telephone calls to: Dawn-Marie Bey (202) 737-0500

I hereby declare that all statements made herein of my own knowledge are true and that all statements made on information and belief are believed to be true; and further that these statements were made with the knowledge that willful false statements and the like so made are punishable by fine or imprisonment, or both, under Section 1001 of Title 18 of the United States Code and that such willful false statements may jeopardize the validity of the application or any patent issued thereon.

Full name of 1st inventor Erik CASO

Inventor's signature [signature] Date 5/4/2010
Residence 1258 Berkeley Street, Santa Monica, CA 90404
Citizenship United States

Full name of 2nd inventor Michael ABRAHAM

Inventor's signature _____ Date _____
Residence 3580 Catalpa Way, Boulder, CO 80304
Citizenship United States

without direct communication between the U.S. attorney or agent and the undersigned. In the event of a change in the persons from whom instructions may be taken, the U.S. attorneys or agents associated with the customer number provided below will be so notified by the undersigned.

As a named inventor, I hereby revoke all prior powers and appoint the practitioners associated with **Customer Number 74877** prosecute this application and transact all business in the United States Patent and Trademark Office connected therewith.

I acknowledge that the attorneys and agents associated with the aforementioned customer number are with King & Spalding LLP and represent my employer (if I am an employee and this application has been or will be assigned to my employer) or the entity with which I have contracted (if I am an independent contractor and this application has been or will be assigned to such entity) and in such cases do not represent me individually. I further acknowledge I have not established, nor will I seek to establish, any personal attorney/client relationship with King & Spalding LLP in connection with this application and understand that, should I require legal representation, I will obtain such, at my expense, other than through King & Spalding LLP.

Please recognize or change the correspondence address for the above-identified application to the address associated with the above-mentioned Customer Number 74877.

Direct telephone calls to: Dawn-Marie Bey (202) 737-0500

I hereby declare that all statements made herein of my own knowledge are true and that all statements made on information and belief are believed to be true; and further that these statements were made with the knowledge that willful false statements and the like so made are punishable by fine or imprisonment, or both, under Section 1001 of Title 18 of the United States Code and that such willful false statements may jeopardize the validity of the application or any patent issued thereon.

Full name of 1st inventor **Erik CASO**

Inventor's signature _____ Date _____
Residence 1258 Berkeley Street, Santa Monica, CA 90404
Citizenship United States

Full name of 2nd inventor **Michael ABRAHAM**

Inventor's signature _____ Date 5/4/2010
Residence 3580 Catalpa Way, Boulder, CO 80304
Citizenship United States

Dropbox Exhibit 1002 - Page 240
Dropbox, Inc. v. Entangled Media, LLC
IPR2024-00285 - U.S. Patent No. 8,484,260

PTO/SB/14 (11-08)
Approved for use through 01/31/2014. OMB 0651-0032
U.S. Patent and Trademark Office; U.S. DEPARTMENT OF COMMERCE
Under the Paperwork Reduction Act of 1995, no persons are required to respond to a collection of information unless it contains a valid OMB control number.

Application Data Sheet 37 CFR 1.76	Attorney Docket Number	ENT0001-DIV1
	Application Number	To Be Assigned
Title of Invention	Method For a Cloud-Based Meta-File System to Virtually Unify Remote and Local Files Across a Range of Devices' Local File Systems	

The application data sheet is part of the provisional or nonprovisional application for which it is being submitted. The following form contains the bibliographic data arranged in a format specified by the United States Patent and Trademark Office as outlined in 37 CFR 1.76.
This document may be completed electronically and submitted to the Office in electronic format using the Electronic Filing System (EFS) or the document may be printed and included in a paper filed application.

Secrecy Order 37 CFR 5.2

☐ Portions or all of the application associated with this Application Data Sheet may fall under a Secrecy Order pursuant to 37 CFR 5.2 (Paper filers only. Applications that fall under Secrecy Order may not be filed electronically.)

Applicant Information:

Applicant 1

Applicant Authority ◉ Inventor ○ Legal Representative under 35 U.S.C. 117 ○ Party of Interest under 35 U.S.C. 118

Prefix	Given Name	Middle Name	Family Name	Suffix
	Erik		CASO	

Residence Information (Select One) ◉ US Residency ○ Non US Residency ○ Active US Military Service

City	Santa Monica	State/Province	CA	Country of Residence	US

Citizenship under 37 CFR 1.41(b) US

Mailing Address of Applicant:

Address 1	1258 Berkely Street
Address 2	

City	Santa Monica	State/Province	CA
Postal Code	90404	Country	US

Applicant 2

Applicant Authority ◉ Inventor ○ Legal Representative under 35 U.S.C. 117 ○ Party of Interest under 35 U.S.C. 118

Prefix	Given Name	Middle Name	Family Name	Suffix
	Michael		ABRAHAM	

Residence Information (Select One) ◉ US Residency ○ Non US Residency ○ Active US Military Service

City	Boulder	State/Province	CO	Country of Residence	US

Citizenship under 37 CFR 1.41(b)

Mailing Address of Applicant:

Address 1	3580 Catalpa Way
Address 2	

City	Boulder	State/Province	CO
Postal Code	80304	Country	US

All Inventors Must Be Listed - Additional Inventor Information blocks may be generated within this form by selecting the **Add** button. Add

Correspondence Information:

Enter either Customer Number or complete the Correspondence Information section below.
For further information see 37 CFR 1.33(a).

☐ **An Address is being provided for the correspondence Information of this application.**

PTO/SB/14 (11-08)
Approved for use through 01/31/2014. OMB 0651-0032
U.S. Patent and Trademark Office; U.S. DEPARTMENT OF COMMERCE
Under the Paperwork Reduction Act of 1995, no persons are required to respond to a collection of information unless it contains a valid OMB control number.

Application Data Sheet 37 CFR 1.76	Attorney Docket Number	ENT0001-DIV1
	Application Number	To Be Assigned
Title of Invention	Method For a Cloud-Based Meta-File System to Virtually Unify Remote and Local Files Across a Range of Devices' Local File Systems	

Customer Number	74877		
Email Address		Add Email	Remove Email

Application Information:

Title of the Invention	Method For a Cloud-Based Meta-File System to Virtually Unify Remote and Local Files Across a Range of Devices' Local File Systems		
Attorney Docket Number	ENT0001-DIV1	Small Entity Status Claimed	☒
Application Type	Nonprovisional		
Subject Matter			
Suggested Class (if any)		Sub Class (if any)	
Suggested Technology Center (if any)			
Total Number of Drawing Sheets (if any)		Suggested Figure for Publication (if any)	

Publication Information:

☐ Request Early Publication (Fee required at time of Request 37 CFR 1.219)

☐ **Request Not to Publish.** I hereby request that the attached application not be published under 35 U.S. C. 122(b) and certify that the invention disclosed in the attached application **has not and will not** be the subject of an application filed in another country, or under a multilateral international agreement, that requires publication at eighteen months after filing.

Representative Information:

Representative information should be provided for all practitioners having a power of attorney in the application. Providing this information in the Application Data Sheet does not constitute a power of attorney in the application (see 37 CFR 1.32). Enter either Customer Number or complete the Representative Name section below. If both sections are completed the Customer Number will be used for the Representative Information during processing.

Please Select One:	◉ Customer Number	○ US Patent Practitioner	○ Limited Recognition (37 CFR 11.9)
Customer Number	74877		

Domestic Benefit/National Stage Information:

This section allows for the applicant to either claim benefit under 35 U.S.C. 119(e), 120, 121, or 365(c) or indicate National Stage entry from a PCT application. Providing this information in the application data sheet constitutes the specific reference required by 35 U.S.C. 119(e) or 120, and 37 CFR 1.78(a)(2) or CFR 1.78(a)(4), and need not otherwise be made part of the specification.

Prior Application Status			Remove
Application Number	Continuity Type	Prior Application Number	Filing Date (YYYY-MM-DD)
	Division of	12/774231	2010-05-05
Prior Application Status			Remove
Application Number	Continuity Type	Prior Application Number	Filing Date (YYYY-MM-DD)
12/774231	non provisional of	61/175489	2009-05-05

PTO/SB/14 (11-08)
Approved for use through 01/31/2014. OMB 0651-0032
U.S. Patent and Trademark Office; U.S. DEPARTMENT OF COMMERCE
Under the Paperwork Reduction Act of 1995, no persons are required to respond to a collection of information unless it contains a valid OMB control number.

Application Data Sheet 37 CFR 1.76	Attorney Docket Number	ENT0001-DIV1
	Application Number	To Be Assigned
Title of Invention	Method For a Cloud-Based Meta-File System to Virtually Unify Remote and Local Files Across a Range of Devices' Local File Systems	

Additional Domestic Benefit/National Stage Data may be generated within this form by selecting the **Add** button.

Foreign Priority Information:

This section allows for the applicant to claim benefit of foreign priority and to identify any prior foreign application for which priority is not claimed. Providing this information in the application data sheet constitutes the claim for priority as required by 35 U.S.C. 119(b) and 37 CFR 1.55(a).

Remove

Application Number	Country[i]	Parent Filing Date (YYYY-MM-DD)	Priority Claimed
			○ Yes ◉ No

Additional Foreign Priority Data may be generated within this form by selecting the **Add** button.

Assignee Information:

Providing this information in the application data sheet does not substitute for compliance with any requirement of part 3 of Title 37 of the CFR to have an assignment recorded in the Office.

Assignee 1

If the Assignee is an Organization check here. ☐

Prefix	**Given Name**	Middle Name	**Family Name**	Suffix

Mailing Address Information:

Address 1			
Address 2			
City		**State/Province**	
Country[i]		Postal Code	
Phone Number		Fax Number	
Email Address			

Additional Assignee Data may be generated within this form by selecting the **Add** button.

Signature:

A signature of the applicant or representative is required in accordance with 37 CFR 1.33 and 10.18. Please see 37 CFR 1.4(d) for the form of the signature.

Signature	/Dawn-Marie Bey/			Date (YYYY-MM-DD)	2012-03-16
First Name	Dawn-Marie	Last Name	Bey	Registration Number	44442

PTO/SB/14 (11-08)
Approved for use through 01/31/2014. OMB 0651-0032
U.S. Patent and Trademark Office; U.S. DEPARTMENT OF COMMERCE
Under the Paperwork Reduction Act of 1995, no persons are required to respond to a collection of information unless it contains a valid OMB control number.

Application Data Sheet 37 CFR 1.76	Attorney Docket Number	ENT0001-DIV1
	Application Number	To Be Assigned
Title of Invention	Method For a Cloud-Based Meta-File System to Virtually Unify Remote and Local Files Across a Range of Devices' Local File Systems	

This collection of information is required by 37 CFR 1.76. The information is required to obtain or retain a benefit by the public which is to file (and by the USPTO to process) an application. Confidentiality is governed by 35 U.S.C. 122 and 37 CFR 1.14. This collection is estimated to take 23 minutes to complete, including gathering, preparing, and submitting the completed application data sheet form to the USPTO. Time will vary depending upon the individual case. Any comments on the amount of time you require to complete this form and/or suggestions for reducing this burden, should be sent to the Chief Information Officer, U.S. Patent and Trademark Office, U.S. Department of Commerce, P.O. Box 1450, Alexandria, VA 22313-1450. DO NOT SEND FEES OR COMPLETED FORMS TO THIS ADDRESS. **SEND TO: Commissioner for Patents, P.O. Box 1450, Alexandria, VA 22313-1450.**

Docket No. ENT0001-DIV1 **PATENT**

IN THE UNITED STATES PATENT AND TRADEMARK OFFICE

In re Patent Application of

Erik CASO, et al.

Serial No.:	**To Be Assigned**	Group Art Unit:	**To Be Assigned**
Filed:	**Herewith**	Examiner:	**To Be Assigned**

For: **METHOD FOR A CLOUD-BASED META-FILE SYSTEM TO VIRTUALLY UNIFY REMOTE AND LOCAL FILES ACROSS A RANGE OF DEVICES' LOCAL FILE SYSTEMS**

INFORMATION DISCLOSURE STATEMENT
UNDER 37 C.F.R. §§ 1.97 AND 1.98

U.S. Patent and Trademark Office
Customer Window, Mail Stop Amendment
Randolph Building
401 Dulany Street
Alexandria , VA 22314

Sir:

In accordance with the requirements of 37 C.F.R. §§ 1.56, 1.97-1.98 and MPEP § 609, the references noted on the attached Form PTO-1449 are hereby brought to the attention of the Examiner.

No fees are believed to be necessary since the references cited in this statement are being submitted before the First Office Action. However, the Commissioner is hereby authorized to charge any additional fees which may be required, or to credit any overpayment, to Deposit Account No. 50-4402.

The above information is presented so that the United States Patent and Trademark Office may, in the first instance, determine any materiality thereof to the claimed invention. See

37 C.F.R. §§ 1.104(a) conferring the PTO duty to consider and use any such information. It is respectfully requested that the information be expressly considered during the prosecution of this application, and that the references be made of record therein and appear among the "References Cited" on any patent to issue therefrom.

Respectfully submitted,

Date: March 15, 2012

By: */Dawn-Marie Bey - 44,442/*
Dawn-Marie Bey
Registration No. 44,442

KING & SPALDING LLP
1700 Pennsylvania Avenue, N.W.
Suite 200
Washington, DC 20006
(202) 737-0500

17676/105002
Doc. No. 18386720

Form PTO-1449 (Rev. 2-32) U.S. Department of Commerce Patent & Trademark Office INFORMATION DISCLOSURE STATEMENT *(Use several sheets if necessary)*	Atty. Docket No. **ENT0001-DIV1**	Serial No. **To Be Assigned**
	Applicant **Erik CASO, et al.**	
	Filing Date **Herewith**	Group **To Be Assigned**

U.S. PATENT DOCUMENTS

Examiner Initial		Document Number	Date	Name	Class	Sub-Class	Filing Date (if appropriate)
		2009/0254592	10/8/09	Marinov, et al.	1	1	11/11/08
		7,600,036	10/6/09	Hesselink, et al.	709	234	6/2/05
		7,587,471	9/8/09	Yasuda, et al.	709	220	3/14/03
		7,587,467	9/8/09	Hesselink, et al.	709	214	11/13/04
		7,546,353	6/9/09	Hesselink, et al.	709	216	11/13/04
		7,499,905	3/3/09	Jaschek, et al.	1	1	10/17/05
		7,467,187	12/16/08	Hesselink, et al.	709	205	10/9/02
		2008/0104077	5/1/08	Gimpl, et al.	1	1	1/6/08
		7,337,171	2/26/08	Gimpl, et al.	1	1	5/12/05
		2007/0162510	7/12/07	Lenzmeier, et al.	707	200	12/30/05
		2006/0277314	12/7/06	Hesselink, et al.	709	229	8/16/06
		7,120,692	10/10/06	Hesselink, et al.	709	225	11/19/02
		2006/0206533	9/14/06	MacLaurin, et al.	707	200	3/14/05
		2005/0256909	11/17/05	Aboulhosn, et al.	1	1	12/15/04
		6,938,042	8/30/05	Aboulhosn, et al.	1	1	10/8/02
		2005/0149481	7/7/05	Hesselink, et al.	1	1	11/13/04
		2005/0144195	6/30/05	Hesselink, et al.	1	1	11/13/04
		2005/0144200	6/30/05	Hesselink, et al.	1	1	11/13/04

EXAMINER	DATE CONSIDERED

EXAMINER: Initial if citation considered, whether or not citation is in conformance with MPEP 609; draw line through citation if not in conformance and not considered. Include copy of this form with next communication.

U.S. PATENT DOCUMENTS CONT'D.							
		2005/0138186	6/23/05	Hesselink, et al.	709	229	11/13/04
		2005/0114711	5/26/05	Hesselink, et al.	726	4	11/13/04
		2004/0172449	9/2/04	Hesselink, et al.	709	204	3/5/04
		6,732,158	5/4/04	Hesselink, et al.	709	208	6/29/00
		6,512,586	1/28/03	Maris	356	432	11/13/01
		6,499,054	12/24/02	Hesselink, et al.	709	204	12/2/99
		6,381,019	4/30/02	Maris	356	432	6/30/00
FOREIGN PATENT DOCUMENTS							
	*	WO 04/046852	6/3/04	Senvid, Inc., et al.	G06F	15/16	11/6/03
	*	JP 2004-046661	2/12/04	Hitachi Ltd.	G06F	12/00	7/15/02
	*	WO 03/085559	10/16/03	Synerdrive, Inc.	G06F	17/30	4/3/03
	*	WO 02/003046	1/10/02	Brown University Research Foundation	G01N	21/00	6/26/01
	*	WO 01/040887	6/7/01	Senvid, Inc.	H04L	12/28	12/1/00
	*	WO 01/014634	3/1/01	AstenJohnson, Inc., et al.	D21F	1/00	8/18/00
OTHER DOCUMENTS (Including Author, Title, Date, Pertinent Pages, Etc.)							

EXAMINER	DATE CONSIDERED

EXAMINER: Initial if citation considered, whether or not citation is in conformance with MPEP 609; draw line through citation if not in conformance and not considered. Include copy of this form with next communication.

17676/105002
Doc. No. 18386719

* Reference cited in parent (Application Serial No. 12/774,231), and not provided herewith.

Electronic Patent Application Fee Transmittal

Application Number:	
Filing Date:	
Title of Invention:	Method For a Cloud-Based Meta-File System to Virtually Unify Remote and Local Files Across a Range of Devices' Local File Systems
First Named Inventor/Applicant Name:	Erik CASO
Filer:	Dawn-Marie Bey./Jeanne Paolella-Bald
Attorney Docket Number:	ENT0001-DIV1

Filed as Small Entity

Utility under 35 USC 111(a) Filing Fees

Description	Fee Code	Quantity	Amount	Sub-Total in USD($)
Basic Filing:				
Utility filing Fee (Electronic filing)	4011	1	95	95
Utility Search Fee	2111	1	310	310
Utility Examination Fee	2311	1	125	125
Pages:				
Claims:				
Miscellaneous-Filing:				
Petition:				
Patent-Appeals-and-Interference:				

Description	Fee Code	Quantity	Amount	Sub-Total in USD($)
Post-Allowance-and-Post-Issuance:				
Extension-of-Time:				
Miscellaneous:				
		Total in USD ($)		**530**

Electronic Acknowledgement Receipt

EFS ID:	12342163
Application Number:	13424366
International Application Number:	
Confirmation Number:	5386
Title of Invention:	Method For a Cloud-Based Meta-File System to Virtually Unify Remote and Local Files Across a Range of Devices' Local File Systems
First Named Inventor/Applicant Name:	Erik CASO
Customer Number:	74877
Filer:	Dawn-Marie Bey./Jeanne Paolella-Bald
Filer Authorized By:	Dawn-Marie Bey.
Attorney Docket Number:	ENT0001-DIV1
Receipt Date:	19-MAR-2012
Filing Date:	
Time Stamp:	23:26:39
Application Type:	Utility under 35 USC 111(a)

Payment information:

Submitted with Payment	yes
Payment Type	Credit Card
Payment was successfully received in RAM	$530
RAM confirmation Number	8142
Deposit Account	
Authorized User	

File Listing:

Document Number	Document Description	File Name	File Size(Bytes)/ Message Digest	Multi Part /.zip	Pages (if appl.)

1	Transmittal of New Application	ent0001div1_utilapptrans.pdf	125841 fa0c0b590f7a9b4269ee6e31a17565ba54dc78f0	no	1
Warnings:					
Information:					
2	Specification	ent0001div1_spec.pdf	135846 778a0760b4112bb44e1e46fd49866675b87b8fbd	no	18
Warnings:					
Information:					
3	Drawings-only black and white line drawings	ent0001div1_figs.pdf	159047 eb4e9baa3cd9a9713c0b9131175d145a3fcc16c0	no	6
Warnings:					
Information:					
4	Oath or Declaration filed	ent0001div1_dec.pdf	241293 3c3217bae72e8a3cad19d0450e4bc83d3f74050d	no	3
Warnings:					
Information:					
5	Application Data Sheet	ent0001div1_appdatasht.pdf	111534 72ad7d4d43d60b57fb12eb5d4d5ac4376d16a5b8	no	4
Warnings:					
Information:					
This is not an USPTO supplied ADS fillable form					
6	Transmittal Letter	ent0001div1_idstrans.pdf	101761 c93604339ce370d92d72c60929bfed010bd7e86e	no	2
Warnings:					
Information:					
7	Information Disclosure Statement (IDS) Form (SB08)	ent0001div1_1449frm.pdf	106680 e58158366815db49ff2cc716d91b3bfc11d74a4a	no	2
Warnings:					
Information:					
This is not an USPTO supplied IDS fillable form					
8	Fee Worksheet (SB06)	fee-info.pdf	33041 3150a7bcb7a9e572ab3e5776e85a48691af8e89e	no	2
Warnings:					
Information:					
		Total Files Size (in bytes):	1015043		

This Acknowledgement Receipt evidences receipt on the noted date by the USPTO of the indicated documents, characterized by the applicant, and including page counts, where applicable. It serves as evidence of receipt similar to a Post Card, as described in MPEP 503.

New Applications Under 35 U.S.C. 111

If a new application is being filed and the application includes the necessary components for a filing date (see 37 CFR 1.53(b)-(d) and MPEP 506), a Filing Receipt (37 CFR 1.54) will be issued in due course and the date shown on this Acknowledgement Receipt will establish the filing date of the application.

National Stage of an International Application under 35 U.S.C. 371

If a timely submission to enter the national stage of an international application is compliant with the conditions of 35 U.S.C. 371 and other applicable requirements a Form PCT/DO/EO/903 indicating acceptance of the application as a national stage submission under 35 U.S.C. 371 will be issued in addition to the Filing Receipt, in due course.

New International Application Filed with the USPTO as a Receiving Office

If a new international application is being filed and the international application includes the necessary components for an international filing date (see PCT Article 11 and MPEP 1810), a Notification of the International Application Number and of the International Filing Date (Form PCT/RO/105) will be issued in due course, subject to prescriptions concerning national security, and the date shown on this Acknowledgement Receipt will establish the international filing date of the application.