US008942387B2

(12) **United States Patent**
Elko et al.

(10) **Patent No.: US 8,942,387 B2**
(45) **Date of Patent: Jan. 27, 2015**

(54) **NOISE-REDUCING DIRECTIONAL MICROPHONE ARRAY**

(75) Inventors: **Gary W. Elko**, Summit, NJ (US); **Jens M. Meyer**, Fairfax, VT (US); **Tomas Fritz Gaensler**, Warren, NJ (US)

(73) Assignee: **MH Acoustics LLC**, Summit, NJ (US)

(*) Notice: Subject to any disclaimer, the term of this patent is extended or adjusted under 35 U.S.C. 154(b) by 1194 days.

(21) Appl. No.: **12/281,447**

(22) PCT Filed: **Mar. 9, 2007**

(86) PCT No.: **PCT/US2007/006093**
§ 371 (c)(1),
(2), (4) Date: **Sep. 2, 2008**

(87) PCT Pub. No.: **WO2007/106399**
PCT Pub. Date: **Sep. 20, 2007**

(65) **Prior Publication Data**

US 2009/0175466 A1 Jul. 9, 2009

Related U.S. Application Data

(63) Continuation-in-part of application No. PCT/US2006/044427, filed on Nov. 15, 2006, and a continuation-in-part of application No. 10/193,825, filed on Jul. 12, 2002, now Pat. No. 7,171,008.

(Continued)

(51) **Int. Cl.**
H04B 15/00 (2006.01)
H04R 3/00 (2006.01)
(Continued)

(52) **U.S. Cl.**
CPC ***H04R 3/005*** (2013.01); ***H04R 25/407*** (2013.01); *G10L 2021/02166* (2013.01); *H04R 2410/07* (2013.01); *H04R 2430/20* (2013.01); *H04R 2430/21* (2013.01); *H04R 2430/23* (2013.01)
USPC **381/94.2**; 381/94.1; 381/92

(58) **Field of Classification Search**
USPC 381/94.1, 94.2, 92.3, 92, 56
See application file for complete search history.

(56) **References Cited**

U.S. PATENT DOCUMENTS

3,626,365 A 12/1971 Press
4,281,551 A * 8/1981 Gaudriot et al. 73/647
(Continued)

FOREIGN PATENT DOCUMENTS

EP 1 581 026 A1 9/2005
JP H06-269084 A 9/1994
(Continued)

OTHER PUBLICATIONS

Olson, HF (1946), Gradient Microphones. Journal of the Acoustic Society of America, vol. 17, No. 3, pp. 192-198.*
(Continued)

Primary Examiner — Duc Nguyen
Assistant Examiner — Kile Blair
(74) *Attorney, Agent, or Firm* — Mendelsohn, Drucker & Dunleavy, P.C.; Steve Mendelsohn

(57) **ABSTRACT**

In one embodiment, a directional microphone array having (at least) two microphones generates forward and backward cardioid signals from two (e.g., omnidirectional) microphone signals. An adaptation factor is applied to the backward cardioid signal, and the resulting adjusted backward cardioid signal is subtracted from the forward cardioid signal to generate a (first-order) output audio signal corresponding to a beampattern having no nulls for negative values of the adaptation factor. After low-pass filtering, spatial noise suppression can be applied to the output audio signal. Microphone arrays having one (or more) additional microphones can be designed to generate second- (or higher-) order output audio signals.

55 Claims, 15 Drawing Sheets

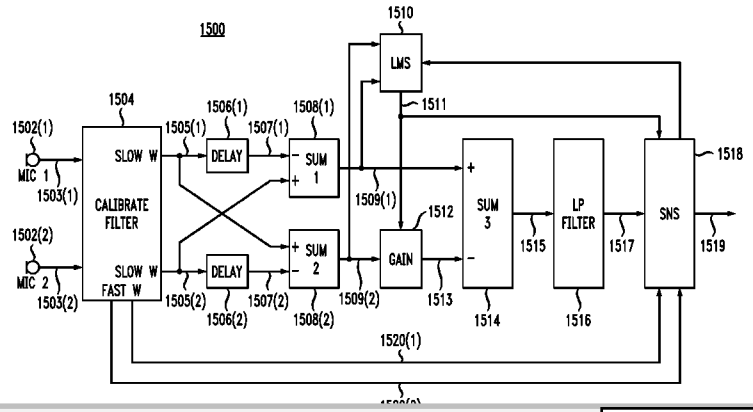

Related U.S. Application Data

(60) Provisional application No. 60/781,250, filed on Mar. 10, 2006, provisional application No. 60/737,577, filed on Nov. 17, 2005, provisional application No. 60/354,650, filed on Feb. 5, 2002.

(51) **Int. Cl.**
H04R 25/00 (2006.01)
G10L 21/0216 (2013.01)

(56) **References Cited**

U.S. PATENT DOCUMENTS

4,741,038	A		4/1988	Elko et al.	
5,325,872	A		7/1994	Westermann	
5,473,701	A	*	12/1995	Cezanne et al.	
5,515,445	A		5/1996	Baumhauer, Jr. et al.	
5,524,056	A		6/1996	Killion et al.	
5,602,962	A		2/1997	Kellermann	
5,610,991	A		3/1997	Janse	
5,687,241	A		11/1997	Ludvigsen	
5,878,146	A		3/1999	Andersen	
5,982,906	A	*	11/1999	Ono	381/94.2
6,041,127	A	*	3/2000	Elko	381/92
6,272,229	B1		8/2001	Baekgaard	
6,292,571	B1		9/2001	Sjursen	
6,339,647	B1		1/2002	Andersen et al.	
6,584,203	B2	*	6/2003	Elko et al.	
6,668,062	B1	*	12/2003	Luo et al.	
6,983,055	B2		1/2006	Luo	
7,242,781	B2	*	7/2007	Hou	
7,577,262	B2	*	8/2009	Kanamori et al.	
7,817,808	B2	*	10/2010	Konchitsky et al.	
8,135,142	B2		3/2012	Fischer et al.	
2003/0031328	A1	*	2/2003	Elko et al.	381/92
2003/0053646	A1		3/2003	Nielsen et al.	
2003/0147538	A1		8/2003	Elko	381/92
2003/0206640	A1	*	11/2003	Malvar et al.	381/93
2004/0022397	A1	*	2/2004	Warren	381/92
2004/0165736	A1	*	8/2004	Hetherington et al.	381/94.3
2005/0276423	A1		12/2005	Aubauer et al.	
2006/0115103	A1	*	6/2006	Feng et al.	381/313
2009/0175466	A1	*	7/2009	Elko et al.	381/94.2
2009/0323982	A1	*	12/2009	Solbach et al.	381/94.3
2010/0329492	A1	*	12/2010	Derleth et al.	381/317

FOREIGN PATENT DOCUMENTS

JP	06-303689			10/1994
JP	10023590	A	*	1/1998
JP	10126878	A	*	5/1998
JP	2001-124621			5/2001
WO	WO9305503	A1		3/1993
WO	WO95/16259	A1		6/1995
WO	WO01/56328	A1		8/2001
WO	WO01/69968	A2		9/2001
WO	WO2006042540	A1		4/2006

OTHER PUBLICATIONS

F. Luo, J. Yang, C. Pavlovic, and A. Nehorai, "Adaptive null-forming scheme in digital hearing aids", IEEE Trans. Signal Process., vol. 50, pp. 1583-1590, 2002.*

Gary W. Elko et al ., "*A simple adaptive first-order differential microphone*," IEEE ASSP Workshop on New Paltz, NY, Oct. 15-18, 1995, XP010154658, 4 pages.

Markus Buck, "*Aspects of First-Order Differential Microphone Arrays in the Presence of Sensor Imperfections*," European Transactions on Telecommunications, Wiley & Sons, Chichester, GB, vol. 13, No. 2, Mar. 2002, XP001123749, pp. 115-122.

Sven Fischer et al., "*Beamforming microphone arrays for speech acquisition in noisy environments*," Speech Communication, Elsevier Science Publishers, Amsterdam, NL, vol. 20, No. 3, Dec. 1996, XP004016546, pp. 215-227.

Restriction Requirement; Mailed Mar. 24, 2011 for corresponding U.S. Appl. No. 12/089,545.

Non-Final Office Action; Mailed Jun. 22, 2011 for corresponding U.S. Appl. No. 12/089,545.

Notice of Allowance; Mailed Sep. 21, 2011 for corresponding U.S. Appl. No. 12/089,545.

Restriction Requirement; Mailed Jan. 16, 2006 for the corresponding U.S. Appl. No. 10/193,825.

Non-Final Office Action; Mailed May 17, 2006 for the corresponding U.S. Appl. No. 10/193,825.

Notice of Allowance; Mailed Oct. 16, 2006 for the corresponding U.S. Appl. No. 10/193,825.

Communication Pursuant to Article 94(3) EPC; Mailed Mar. 30, 2012 for corresponding EP Application No. 07 752 770.3.

Eargle, J.; "The Microphone Book"; 2nd Ed.; Focal Press; 2004; pp. 82-85.

Communication Pursuant to Article 94(3) EPC; Mailed Jul. 5, 2012 for corresponding EP Application No. 07 752 770.3.

* cited by examiner

FIG. 1

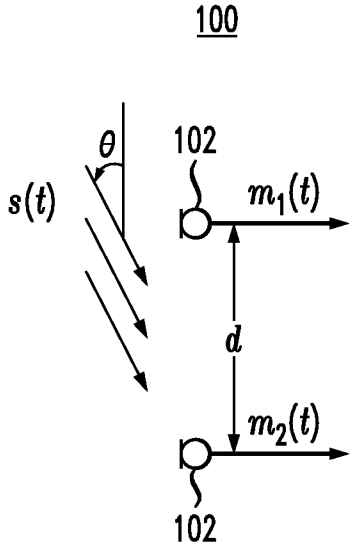

FIG. 2

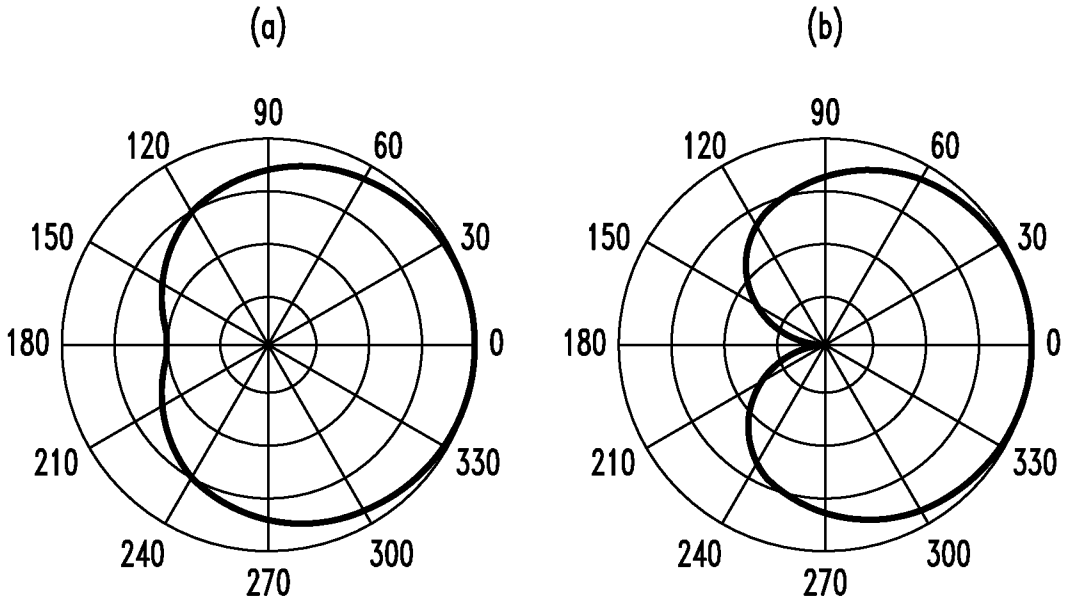

FIG. 3

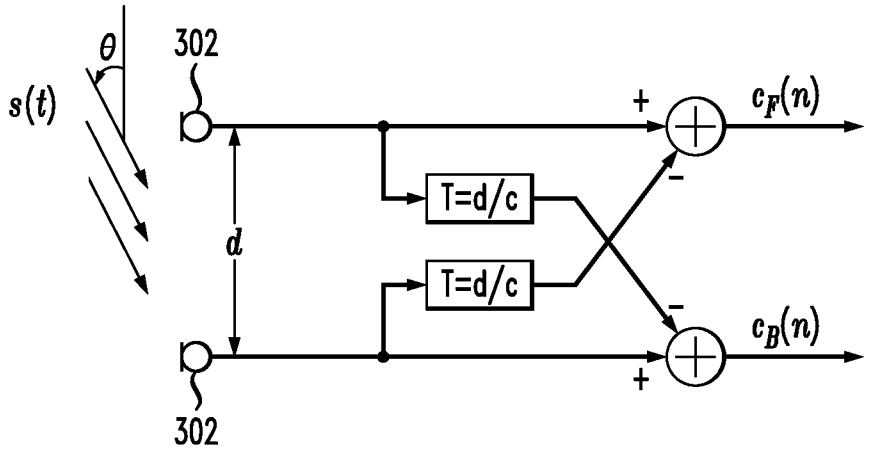

FIG. 4

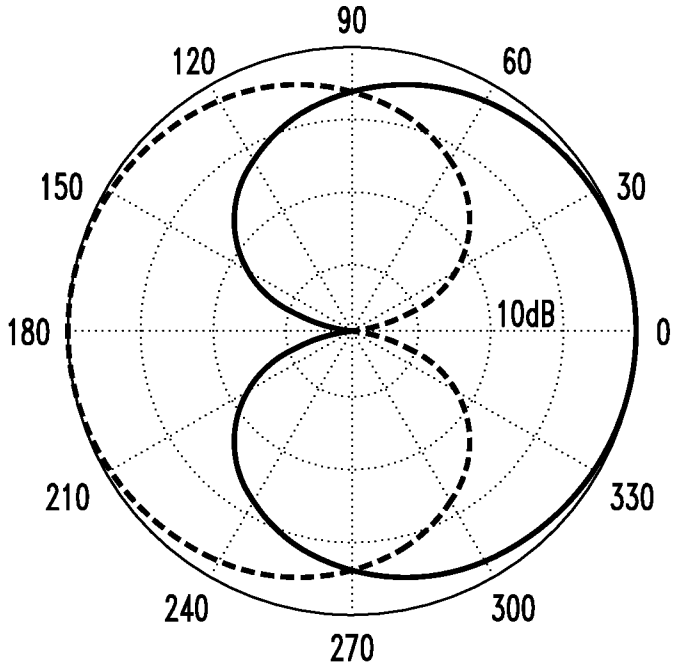

FIG. 5

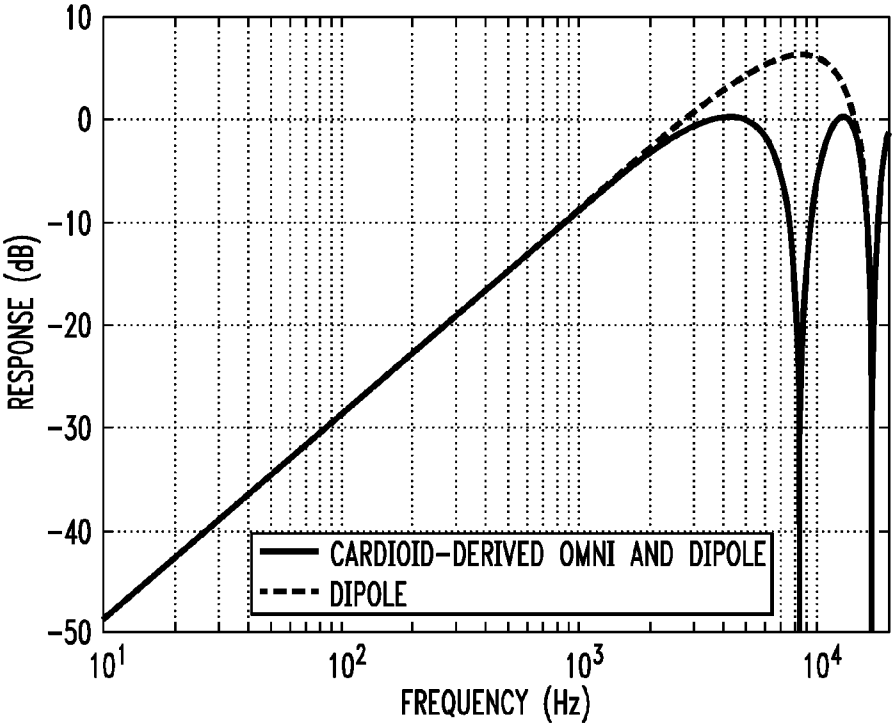

FIG. 6

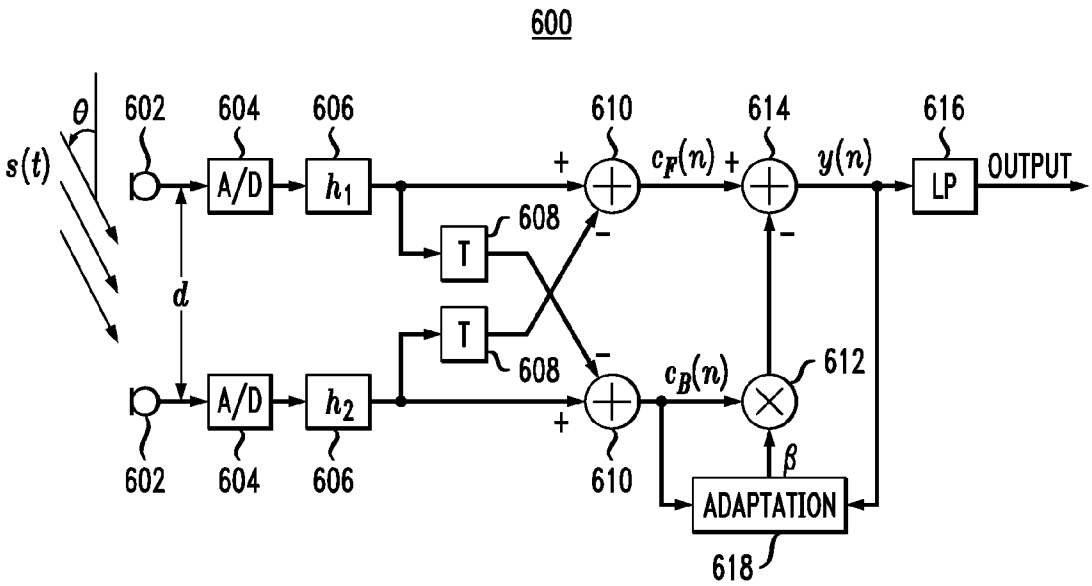

DOCKET ALARM

Explore Litigation Insights

Docket Alarm provides insights to develop a more informed litigation strategy and the peace of mind of knowing you're on top of things.

Real-Time Litigation Alerts

Keep your litigation team up-to-date with **real-time alerts** and advanced team management tools built for the enterprise, all while greatly reducing PACER spend.

Our comprehensive service means we can handle Federal, State, and Administrative courts across the country.

Advanced Docket Research

With over 230 million records, Docket Alarm's cloud-native docket research platform finds what other services can't. Coverage includes Federal, State, plus PTAB, TTAB, ITC and NLRB decisions, all in one place.

Identify arguments that have been successful in the past with full text, pinpoint searching. Link to case law cited within any court document via Fastcase.

Analytics At Your Fingertips

Learn what happened the last time a particular judge, opposing counsel or company faced cases similar to yours.

Advanced out-of-the-box PTAB and TTAB analytics are always at your fingertips.

API

Docket Alarm offers a powerful API (application programming interface) to developers that want to integrate case filings into their apps.

LAW FIRMS

Build custom dashboards for your attorneys and clients with live data direct from the court.

Automate many repetitive legal tasks like conflict checks, document management, and marketing.

FINANCIAL INSTITUTIONS

Litigation and bankruptcy checks for companies and debtors.

E-DISCOVERY AND LEGAL VENDORS

Sync your system to PACER to automate legal marketing.