15866 U.S.PTO 080304

22278 U.S.PTO 10/911211 080304

Please type a plus sign (+) inside this box → +

PTO/SB/05 (08-00)
Approved for use through 10/31/2002. OMB 0651-0032
U.S. Patent and Trademark Office; U.S. DEPARTMENT OF COMMERCE

Under the Paperwork Reduction Act of 1995, no persons are required to respond to a collection of information unless it displays a valid OMB control number.

UTILITY PATENT APPLICATION TRANSMITTAL

(Only for new nonprovisional applications under 37 CFR 1.53(b))

Attorney Docket No.	31
First Inventor	Rao
Title	Dynamically Configurable Wireless Devices
Express Mail Label No.	ER 452458852 US

APPLICATION ELEMENTS

See MPEP chapter 600 concerning utility patent application contents.

1. ☐ Fee Transmittal Form (e.g., PTO/SB/17) *(Submit an original and a duplicate for fee processing)*
2. ☒ Applicant claims small entity status. See 37 CFR 1.27.
3. ☐ Specification [*Total Pages* ☐] *(preferred arrangement set forth below)*
   - Descriptive title of the invention
   - Cross Reference to Related Applications
   - Statement Regarding Fed sponsored R & D
   - Reference to sequence listing, a table, or a computer program listing appendix
   - Background of the Invention
   - Brief Summary of the Invention
   - Brief Description of the Drawings *(if filed)*
   - Detailed Description
   - Claim(s)
   - Abstract of the Disclosure
4. ☐ Drawing(s) *(35 U.S.C. 113)* [*Total Sheets* ☐]
5. Oath or Declaration [*Total Pages* ☐]
   a. ☒ Newly executed (original or copy)
   b. ☐ Copy from a prior application (37 CFR 1.63 (d)) *(for continuation/divisional with Box 17 completed)*
      i. ☐ DELETION OF INVENTOR(S) Signed statement attached deleting inventor(s) named in the prior application, see 37 CFR 1.63(d)(2) and 1.33(b).
6. ☐ Application Data Sheet. See 37 CFR 1.76
7. ☐ CD-ROM or CD-R in duplicate, large table or Computer Program *(Appendix)*
8. Nucleotide and/or Amino Acid Sequence Submission *(if applicable, all necessary)*
   a. ☐ Computer Readable Form (CRF)
   b. Specification Sequence Listing on:
      i. ☐ CD-ROM or CD-R (2 copies); or
      ii. ☐ paper
   c. ☐ Statements verifying identity of above copies

ADDRESS TO:

Assistant Commissioner for Patents
Box Patent Application
Washington, DC 20231

ACCOMPANYING APPLICATION PARTS

9. ☐ Assignment Papers (cover sheet & document(s))
10. ☐ 37 CFR 3.73(b) Statement *(when there is an assignee)* ☐ Power of Attorney
11. ☐ English Translation Document *(if applicable)*
12. ☐ Information Disclosure Statement (IDS)/PTO-1449 ☐ Copies of IDS Citations
13. ☐ Preliminary Amendment
14. ☐ Return Receipt Postcard (MPEP 503) *(Should be specifically itemized)*
15. ☐ Certified Copy of Priority Document(s) *(if foreign priority is claimed)*
16. ☒ Other: Nonpublication request under 35USC122(b)(2)(B)(i)

17. If a CONTINUING APPLICATION, *check appropriate box, and supply the requisite information below and in a preliminary amendment, or in an Application Data Sheet under 37 CFR 1.76:*

☐ Continuation ☒ Divisional ☐ Continuation-in-part (CIP) of prior application No.: 09 / 591,381

Prior application information: Examiner Mehrapour Group / Art Unit: 2171

For CONTINUATION OR DIVISIONAL APPS only: The entire disclosure of the prior application, from which an oath or declaration is supplied under Box 5b, is considered a part of the disclosure of the accompanying continuation or divisional application and is hereby incorporated by reference. The incorporation can only be relied upon when a portion has been inadvertently omitted from the submitted application parts.

18. CORRESPONDENCE ADDRESS

☐ *Customer Number or Bar Code Label* [redacted] *(Insert Customer No. or Attach bar code label here)* or ☒ *Correspondence address below*

Name	Raman Rao				
Address	3099 Alexis Drive				
City	Palo Alto	State	CA	Zip Code	94304
Country	USA	Telephone	650-941-7096	Fax	650-618-1553

Name (Print/Type)	Raman K. Rao	Registration No. (Attorney/Agent)	
Signature	Raman K. Rao	Date	August 3, 2004

Burden Hour Statement: This form is estimated to take 0.2 hours to complete. Time will vary depending upon the needs of the individual case. Any comments on the amount of time you are required to complete this form should be sent to the Chief Information Officer, U.S. Patent and Trademark Office, Washington, DC 20231. DO NOT SEND FEES OR COMPLETED FORMS TO THIS ADDRESS. SEND TO: Assistant Commissioner for Patents, Box Patent Application, Washington, DC 20231.

8/03/04

Commissioner for Patents
P.O.BOX 1450
Alexandria, VA 22313-1450

Subject: New Divisional Application of Co-pending Application 09/591,381
Titled Dynamically Configurable Wireless Devices

Dear Sir,

Enclosed is the application transmittal and other forms for the new divisional application. The original specification and drawings are not included as it is already part of the prior filing on 06/09/2000 of currently pending application 09/591,381.

There are 4 independent claims and 19 dependent claims in the current application. Please let me know the amount of fees and any other requirements.

Thank you,

Raman K. Rao
3099 Alexis Drive, CA 94304
TEL: 650 941 7096
FAX: 650 618 1553

PTO/SB/35 (11-00)
Approved for use through 10/31/2002. OMB 0651-0031
U.S. Patent and Trademark Office; U. S. DEPARTMENT OF COMMERCE
Under the Paperwork Reduction Act of 1995, no persons are required to respond to a collection of information unless it displays a valid OMB control number.

NONPUBLICATION REQUEST UNDER 35 U.S.C. 122(b)(2)(B)(i)		
	First Named Inventor	RAO
	Title	Dynamically Configurable Wireless Devices
	Atty Docket Number	31

I hereby certify that the invention disclosed in the attached application **has not and will not be** the subject of an application filed in another country, or under a multilateral agreement, that requires publication at eighteen months after filing.

I hereby request that the attached application not be published under 35 U.S.C. 122(b).

August 3, 2004
Date

Raman K. Rao
Signature

Raman K. Rao
Typed or printed name

This request must be signed in compliance with 37 CFR 1.33(b) and submitted with the application **upon filing.**

Applicant may rescind this nonpublication request at any time. If applicant rescinds a request that an application not be published under 35 U.S.C. 122(b), the application will be scheduled for publication at eighteen months from the earliest claimed filing date for which a benefit is claimed.

If applicant subsequently files an application directed to the invention disclosed in the attached application in another country, or under a multilateral international agreement, that requires publication of applications eighteen months after filing, the applicant **must** notify the United States Patent and Trademark Office of such filing within forty-five (45) days after the date of the filing of such foreign or international application. **Failure to do so will result in abandonment of this application (35 U.S.C. 122(b)(2)(B)(iii)).**

Burden Hour Statement: This collection of information is required by 37 CFR 1.213(a). The information is used by the public to request that an application not be published under 35 U.S.C. 122(b) (and the PTO to process that request). Confidentiality is governed by 35 U.S.C. 122 and 37 CFR 1.14. This form is estimated to take 6 minutes to complete. This time will vary depending upon the needs of the individual case. Any comments on the amount of time you are required to complete this form should be sent to the Chief Information Officer, U.S. Patent and Trademark Office, Washington, DC 20231. DO NOT SEND FEES OR COMPLETED FORMS TO THIS ADDRESS. SEND TO: Assistant Commissioner for Patents, Washington, DC 20231.

15866 U.S.PTO 080304

22278 U.S.PTO 10/911211 080304

Please type a plus sign (+) inside this box → +

PTO/SB/05 (08-00)
Approved for use through 10/31/2002. OMB 0651-0032
U.S. Patent and Trademark Office; U.S. DEPARTMENT OF COMMERCE

Under the Paperwork Reduction Act of 1995, no persons are required to respond to a collection of information unless it displays a valid OMB control number.

UTILITY PATENT APPLICATION TRANSMITTAL

(Only for new nonprovisional applications under 37 CFR 1.53(b))

Attorney Docket No.	31
First Inventor	Rao
Title	Dynamically Configurable Wireless Devices
Express Mail Label No.	ER 452458852 US

APPLICATION ELEMENTS

See MPEP chapter 600 concerning utility patent application contents.

1. ☐ Fee Transmittal Form (e.g., PTO/SB/17) *(Submit an original and a duplicate for fee processing)*
2. ☒ Applicant claims small entity status. See 37 CFR 1.27.
3. ☐ Specification [*Total Pages* ☐] *(preferred arrangement set forth below)*
   - Descriptive title of the invention
   - Cross Reference to Related Applications
   - Statement Regarding Fed sponsored R & D
   - Reference to sequence listing, a table, or a computer program listing appendix
   - Background of the Invention
   - Brief Summary of the Invention
   - Brief Description of the Drawings *(if filed)*
   - Detailed Description
   - Claim(s)
   - Abstract of the Disclosure
4. ☐ Drawing(s) *(35 U.S.C. 113)* [*Total Sheets* ☐]
5. Oath or Declaration [*Total Pages* ☐]
   a. ☒ Newly executed (original or copy)
   b. ☐ Copy from a prior application (37 CFR 1.63 (d)) *(for continuation/divisional with Box 17 completed)*
      i. ☐ DELETION OF INVENTOR(S) Signed statement attached deleting inventor(s) named in the prior application, see 37 CFR 1.63(d)(2) and 1.33(b).
6. ☐ Application Data Sheet. See 37 CFR 1.76
7. ☐ CD-ROM or CD-R in duplicate, large table or Computer Program *(Appendix)*
8. Nucleotide and/or Amino Acid Sequence Submission *(if applicable, all necessary)*
   a. ☐ Computer Readable Form (CRF)
   b. Specification Sequence Listing on:
      i. ☐ CD-ROM or CD-R (2 copies); or
      ii. ☐ paper
   c. ☐ Statements verifying identity of above copies

ADDRESS TO:

Assistant Commissioner for Patents
Box Patent Application
Washington, DC 20231

ACCOMPANYING APPLICATION PARTS

9. ☐ Assignment Papers (cover sheet & document(s))
10. ☐ 37 CFR 3.73(b) Statement *(when there is an assignee)* ☐ Power of Attorney
11. ☐ English Translation Document *(if applicable)*
12. ☐ Information Disclosure Statement (IDS)/PTO-1449 ☐ Copies of IDS Citations
13. ☐ Preliminary Amendment
14. ☐ Return Receipt Postcard (MPEP 503) *(Should be specifically itemized)*
15. ☐ Certified Copy of Priority Document(s) *(if foreign priority is claimed)*
16. ☒ Other: Nonpublication request under 35USC122(b)(2)(B)(i)

17. If a CONTINUING APPLICATION, *check appropriate box, and supply the requisite information below and in a preliminary amendment, or in an Application Data Sheet under 37 CFR 1.76:*

☐ Continuation ☒ Divisional ☐ Continuation-in-part (CIP) of prior application No.: 09 / 591,381

Prior application information: Examiner Mehrapour Group / Art Unit: 2171

For CONTINUATION OR DIVISIONAL APPS only: The entire disclosure of the prior application, from which an oath or declaration is supplied under Box 5b, is considered a part of the disclosure of the accompanying continuation or divisional application and is hereby incorporated by reference. The incorporation can only be relied upon when a portion has been inadvertently omitted from the submitted application parts.

18. CORRESPONDENCE ADDRESS

☐ *Customer Number or Bar Code Label* [redacted] *(Insert Customer No. or Attach bar code label here)* or ☒ *Correspondence address below*

Name	Raman Rao				
Address	3099 Alexis Drive				
City	Palo Alto	State	CA	Zip Code	94304
Country	USA	Telephone	650-941-7096	Fax	650-618-1553

Name (Print/Type)	Raman K. Rao	Registration No. (Attorney/Agent)	
Signature	Raman K. Rao	Date	August 3, 2004

Burden Hour Statement: This form is estimated to take 0.2 hours to complete. Time will vary depending upon the needs of the individual case. Any comments on the amount of time you are required to complete this form should be sent to the Chief Information Officer, U.S. Patent and Trademark Office, Washington, DC 20231. DO NOT SEND FEES OR COMPLETED FORMS TO THIS ADDRESS. SEND TO: Assistant Commissioner for Patents, Box Patent Application, Washington, DC 20231.

8/03/04

Commissioner for Patents
P.O.BOX 1450
Alexandria, VA 22313-1450

Subject: New Divisional Application of Co-pending Application 09/591,381
Titled Dynamically Configurable Wireless Devices

Dear Sir,

Enclosed is the application transmittal and other forms for the new divisional application. The original specification and drawings are not included as it is already part of the prior filing on 06/09/2000 of currently pending application 09/591,381.

There are 4 independent claims and 19 dependent claims in the current application. Please let me know the amount of fees and any other requirements.

Thank you,

Raman K. Rao
3099 Alexis Drive, CA 94304
TEL: 650 941 7096
FAX: 650 618 1553

PTO/SB/35 (11-00)
Approved for use through 10/31/2002. OMB 0651-0031
U.S. Patent and Trademark Office; U. S. DEPARTMENT OF COMMERCE
Under the Paperwork Reduction Act of 1995, no persons are required to respond to a collection of information unless it displays a valid OMB control number.

NONPUBLICATION REQUEST UNDER 35 U.S.C. 122(b)(2)(B)(i)	First Named Inventor	RAO
	Title	Dynamically Configurable Wireless Devices
	Atty Docket Number	31

I hereby certify that the invention disclosed in the attached application **has not and will not be** the subject of an application filed in another country, or under a multilateral agreement, that requires publication at eighteen months after filing.

I hereby request that the attached application not be published under 35 U.S.C. 122(b).

August 3, 2004
Date

Raman K. Rao
Signature

Raman K. Rao
Typed or printed name

This request must be signed in compliance with 37 CFR 1.33(b) and submitted with the application **upon filing.**

Applicant may rescind this nonpublication request at any time. If applicant rescinds a request that an application not be published under 35 U.S.C. 122(b), the application will be scheduled for publication at eighteen months from the earliest claimed filing date for which a benefit is claimed.

If applicant subsequently files an application directed to the invention disclosed in the attached application in another country, or under a multilateral international agreement, that requires publication of applications eighteen months after filing, the applicant **must** notify the United States Patent and Trademark Office of such filing within forty-five (45) days after the date of the filing of such foreign or international application. **Failure to do so will result in abandonment of this application (35 U.S.C. 122(b)(2)(B)(iii)).**

Burden Hour Statement: This collection of information is required by 37 CFR 1.213(a). The information is used by the public to request that an application not be published under 35 U.S.C. 122(b) (and the PTO to process that request). Confidentiality is governed by 35 U.S.C. 122 and 37 CFR 1.14. This form is estimated to take 6 minutes to complete. This time will vary depending upon the needs of the individual case. Any comments on the amount of time you are required to complete this form should be sent to the Chief Information Officer, U.S. Patent and Trademark Office, Washington, DC 20231. DO NOT SEND FEES OR COMPLETED FORMS TO THIS ADDRESS. SEND TO: Assistant Commissioner for Patents, Washington, DC 20231.

PTO/SB/01 (08-03)
Approved for use through 07/31/2006. OMB 0651-0032
U.S. Patent and Trademark Office; U.S. DEPARTMENT OF COMMERCE
Under the Paperwork Reduction Act of 1995, no persons are required to respond to a collection of information unless it contains a valid OMB control number.

DECLARATION FOR UTILITY OR DESIGN PATENT APPLICATION (37 CFR 1.63)

☑ Declaration Submitted With Initial Filing *OR* ☐ Declaration Submitted after Initial Filing (surcharge (37 CFR 1.16 (e)) required)

Attorney Docket Number	31
First Named Inventor	RAO
COMPLETE IF KNOWN	
Application Number	
Filing Date	
Art Unit	
Examiner Name	

I hereby declare that:

Each inventor's residence, mailing address, and citizenship are as stated below next to their name.

I believe the inventor(s) named below to be the original and first inventor(s) of the subject matter which is claimed and for which a patent is sought on the invention entitled:

Dynamically Configurable Wireless Devices

(Title of the Invention)

the specification of which

☐ is attached hereto

OR

☑ was filed on (MM/DD/YYYY) 06/09/2000 as United States Application Number or PCT International Application Number 09/591,381 and was amended on (MM/DD/YYYY) 11/28/2003 (if applicable).

I hereby state that I have reviewed and understand the contents of the above identified specification, including the claims, as amended by any amendment specifically referred to above.

I acknowledge the duty to disclose information which is material to patentability as defined in 37 CFR 1.56, including for continuation-in-part applications, material information which became available between the filing date of the prior application and the national or PCT international filing date of the continuation-in-part application.

I hereby claim foreign priority benefits under 35 U.S.C. 119(a)-(d) or (f), or 365(b) of any foreign application(s) for patent, inventor's or plant breeder's rights certificate(s), or 365(a) of any PCT international application which designated at least one country other than the United States of America, listed below and have also identified below, by checking the box, any foreign application for patent, inventor's or plant breeder's rights certificate(s), or any PCT international application having a filing date before that of the application on which priority is claimed.

Prior Foreign Application Number(s)	Country	Foreign Filing Date (MM/DD/YYYY)	Priority Not Claimed	Certified Copy Attached? Yes	No
			☐	☐	☐
			☐	☐	☐
			☐	☐	☐
			☐	☐	☐

☐ Additional foreign application numbers are listed on a supplemental priority data sheet PTO/SB/02B attached hereto.

This collection of information is required by 35 U.S.C. 115 and 37 CFR 1.63. The information is required to obtain or retain a benefit by the public which is to file (and by the USPTO to process) an application. Confidentiality is governed by 35 U.S.C. 122 and 37 CFR 1.14. This collection is estimated to take 21 minutes to complete, including gathering, preparing, and submitting the completed application form to the USPTO. Time will vary depending upon the individual case. Any comments on the amount of time you require to complete this form and/or suggestions for reducing this burden, should be sent to the Chief Information Officer, U.S. Patent and Trademark Office, U.S. Department of Commerce, P.O. Box 1450, Alexandria, VA 22313-1450. DO NOT SEND FEES OR COMPLETED FORMS TO THIS ADDRESS. **SEND TO: Commissioner for Patents, P.O. Box 1450, Alexandria, VA 22313-1450.**

If you need assistance in completing the form, call 1-800-PTO-9199 and select option 2.

PTO/SB/01 (06-03)
Approved for use through 07/31/2003. OMB 0651-0032
U.S. Patent and Trademark Office; U.S. DEPARTMENT OF COMMERCE
Under the Paperwork Reduction Act of 1995, no persons are required to respond to a collection of information unless it contains a valid OMB control number.

DECLARATION — Utility or Design Patent Application

Direct all correspondence to: ☐ Customer Number: _____ *OR* ☑ Correspondence address below

Name
RAMAN K. RAO

Address
3099 ALEXIS DRIVE

City	State	ZIP
PALO ALTO	CA	94304

Country	Telephone	Fax
USA	650 941 7096	650 618 1553

I hereby declare that all statements made herein of my own knowledge are true and that all statements made on information and belief are believed to be true; and further that these statements were made with the knowledge that willful false statements and the like so made are punishable by fine or imprisonment, or both, under 18 U.S.C. 1001 and that such willful false statements may jeopardize the validity of the application or any patent issued thereon.

NAME OF SOLE OR FIRST INVENTOR: ☐ A petition has been filed for this unsigned inventor

Given Name (first and middle [if any])	Family Name or Surname
RAMAN K.	RAO

Inventor's Signature: Raman K. Rao Date: 8/3/04

Residence: City	State	Country	Citizenship
PALO ALTO	CA	USA	USA

Mailing Address
3099 ALEXIS DRIVE

City	State	ZIP	Country
PALO ALTO	CA	94304	USA

NAME OF SECOND INVENTOR: ☐ A petition has been filed for this unsigned inventor

Given Name (first and middle [if any])	Family Name or Surname
SUNIL K.	RAO

Inventor's Signature: Sunil K. Rao Date: 8/3/04

Residence: City	State	Country	Citizenship
PALO ALTO	CA	USA	USA

Mailing Address
3099 ALEXIS DRIVE

City	State	ZIP	Country
PALO ALTO	CA	94304	USA

☑ Additional inventors or a legal representative are being named on the 1 supplemental sheet(s) PTO/SB/02A or 02LR attached hereto.

PTO/SB/02A (08-03)
Approved for use through 08/31/2003. OMB 0651-0032
U.S. Patent and Trademark Office; U.S. DEPARTMENT OF COMMERCE
Under the Paperwork Reduction Act of 1995, no persons are required to respond to a collection of information unless it contains a valid OMB control number.

DECLARATION

ADDITIONAL INVENTOR(S)
Supplemental Sheet
Page 1 of 1

Name of Additional Joint Inventor, if any:	☐ A petition has been filed for this unsigned inventor		
Given Name (first and middle (if any))	Family Name or Surname		
SANJAY K.	RAO		
Inventor's Signature Sanjay Rao			8/3/04 Date
PALO ALTO Residence: City	CA State	USA Country	USA Citizenship
3099 ALEXIS DRIVE Mailing Address			
Mailing Address			
PALO ALTO City	CA State	94304 Zip	USA Country

Name of Additional Joint Inventor, if any:	☐ A petition has been filed for this unsigned inventor		
Given Name (first and middle (if any))	Family Name or Surname		
Inventor's Signature	Date		
Residence: City	State	Country	Citizenship
Mailing Address			
Mailing Address			
City	State	Zip	Country

Name of Additional Joint Inventor, if any:	☐ A petition has been filed for this unsigned inventor		
Given Name (first and middle (if any))	Family Name or Surname		
Inventor's Signature	Date		
Residence: City	State	Country	Citizenship
Mailing Address			
Mailing Address			
City	State	Zip	Country

This collection of information is required by 35 U.S.C. 115 and 37 CFR 1.63. The information is required to obtain or retain a benefit by the public which is to file (and by the USPTO to process) an application. Confidentiality is governed by 35 U.S.C. 122 and 37 CFR 1.14. This collection is estimated to take 21 minutes to complete, including gathering, preparing, and submitting the completed application form to the USPTO. Time will vary depending upon the individual case. Any comments on the amount of time you require to complete this form and/or suggestions for reducing this burden, should be sent to the Chief Information Officer, U.S. Patent and Trademark Office, U.S. Department of Commerce, P.O. Box 1450, Alexandria, VA 22313-1450. DO NOT SEND FEES OR COMPLETED FORMS TO THIS ADDRESS. **SEND TO: Commissioner for Patents, P.O. Box 1450, Alexandria, VA 22313-1450.**

If you need assistance in completing the form, call 1-800-PTO-9199 (1-800-786-9199) and select option 2.

I hereby certify that this correspondence is being deposited with the United States Postal Service as First Class Mail in an envelope addressed to: Commissioner for Patents, Arlington, VA 22313 on 8/03/2004
Signed: Raman K. Rao Date: 8/03/2004
Raman K. Rao, Applicant

IN THE UNITED STATES PATENT AND TRADEMARK OFFICE

RELATED REFERENCES TO CURENT DIVISIONAL APPLICATION

Inventor(s)	: RAO	
Serial No.	: 09/591,381	Group Art Unit: 2171
Filed	06/09/2000	Examiner: Mehrpour
For:	DYNAMICALLY CONFIGURABLE WIRELESS DEVICES	

PRELIMINARY AMENDMENT A

Commissioner for Patents
PO BOX 1450
Washington, D. C. 20231

Sir:

This Preliminary Amendment A is submitted concurrently with this divisional application for examination of claims that were restricted in the application 09/591,381 filed on 06/09/2000 which is currently still under examination. The examination of the claims numbered 13-35 is requested.

Ex.1002
APPLE INC. / Page 10 of 610

CLAIMS:

13. In a mobile communication system, a method for dynamically configuring a mobile communication device for one or more selected functions comprising:

utilizing a mobile device configured with input, output and or display capabilities for communication of voice and data,

utilizing a central server,

communicating between a mobile device and a central server by wired or wireless means utilizing one or more communication methods and communication protocols,

configuring the mobile device for a selected first set of functions including communication, computation, command, sense and control for a selected first utility to the mobile device user;

establishing one or more functional instructions for dynamic reconfiguration of the mobile device from a first set of functions to a second set of functions;

storing functional instructions for executing said dynamic reconfiguration of the mobile device from a first set of functions to a second set of functions within the mobile device, the central server including a combination of the mobile device and the central server; further including

storing said functional instruction sets in databases and lookup tables within the mobile device and or the central server for ease and efficiency of execution from a first set of functions to one or more selected second set of functions of the mobile device;

selecting a functional instruction set for a selected reconfiguration of the mobile device from a first set of functions to a selected second set of functions in a standalone manner utilizing the mobile device and or in conjunction with utilizing the central server;

accessing one or more said selected partial or full functional instructions or a set of functional instructions from storage, databases and lookup tables contained within the mobile device itself and/or accessing said selected partial or full functional instructions or a set of functional instructions from storage, databases and lookup tables contained within a central server by wired or wireless communication means;

executing the dynamic reconfiguration of the mobile device from use with a first set of functions to for use with a second set of functions utilizing the processing, storage and database capabilities of the mobile device in a standalone manner and or in conjunction with the processing, storage and database capabilities of a central server, a local server, a network server or a combination thereof;

reconfiguring the mobile device for the selected first set of functions, second set of functions and one or more other set of functions, to provide one or more selected second utility(s) to the mobile device user dynamically in real time or at the selected time.

Ex.1002
APPLE INC. / Page 11 of 610

14. A dynamically reconfigurable mobile communication system, including a mobile communication device for performing selected functions comprising:

a mobile device configured with input, output and or display capabilities for communication of voice and data,

a central server,

means for communication between a mobile device and a central server by wired or wireless means,

means for configuring the mobile device for a selected first set of functions including communication, computation, command, sense and control for a selected first utility to the mobile device user;

means for establishing one or more functional instructions for dynamic reconfiguration of the mobile device from a first set of functions to a second set of functions;

means for storing functional instructions for executing said dynamic reconfiguration of the mobile device from a first set of functions to a second set of functions within the mobile device, the central server including a combination of the mobile device and the central server; including

means for storing said functional instruction sets in databases and lookup tables within the mobile device and or the central server for ease and efficiency of execution from a first set of functions to one or more selected second set of functions of the mobile device;

means for selecting a functional instruction set for a selected reconfiguration of the mobile device from a first set of functions to a selected second set of functions in a standalone manner utilizing the mobile device and or in conjunction with utilizing the central server;

means for accessing one or more said selected partial or full functional instructions or a set of functional instructions from storage, databases and lookup tables contained within the mobile device itself and/or accessing said selected partial or full functional instructions or a set of functional instructions from storage, databases and lookup tables contained within a central server by wired or wireless communication means;

means for executing the dynamic reconfiguration of the mobile device from use with a first set of functions to for use with a second set of functions utilizing the processing, storage and database capabilities of the mobile device in a standalone manner and or in conjunction with the processing, storage and database capabilities of a central server, a local server, a network server or a combination thereof; including

means for reconfiguring the mobile device for the selected first set of functions and or a first set of utility, second set of functions and or a second utility and one or more other set of functions and utility(s), to provide one or more desirable functions and utility(s) to the mobile device user dynamically in real time or at the selected time.

Ex.1002
APPLE INC. / Page 12 of 610

15. A mobile communication system of claim 14 comprising

means for storing a plurality of mobile device functionality instructions on the mobile device and or the local, central and or network server;

means for modifying and generating a plurality of new mobile device functionality instructions by means of the mobile device and or the servers;

means for independently configuring the mobile device functionality in a stand alone manner and or in conjunction with a local, central or network server;

means for using the mobile device functionality instructions in the selected manner and at the selected time.

16. A mobile device communication system of claim 14 comprising

means for dynamically configuring the full or partial functionality of the mobile device by software means without altering the hardware configuration,

means for the functional instruction software to be resident on the mobile device and or on a local, central and or network server,

means for using the functional instruction software resident on the mobile device in a stand alone manner and or in conjunction with the functional instruction software resident on the local, central and or network server,

means for utilizing a plurality of mobile device functionalities with the existing hardware configuration.

17. A mobile communication system of claim 14 comprising

means for enabling one or more specific dynamic mode configurations of the mobile device for desired utility such as a cell phone, a PDA, a remote controller, an IP phone, a music player, a voice recorder, a camera and other devices with specific utility or a combination of utilities to the user;

means for enabling and associating one or more user profiles with the selected mode configuration from one function to another function;

means for storing a plurality of mode configurations, user profiles, functional instructions, program instructions and other enabling tools on the mobile device itself and or the local, central and or network server;

means for dynamically reconfiguring and utilizing the desired mode configuration and or the desired user profile by means of the functional instructions and program instructions in conjunction with the processing power, storage, databases and lookup tables of the mobile device by itself and or in conjunction with the processing power, storage, databases and lookup tables of the local, central and or network server;

Ex.1002
APPLE INC. / Page 13 of 610

means for utilizing the existing mobile device hardware for a specific function or a combination of functions for a desired utility to the mobile device user dynamically or at the selected time in conjunction with the software and functional instructions resident within the mobile device, a central server, a local server, a network server or a combination thereof.

18. A mobile communication system of claim 14 comprising

means for configuration of the mobile device for communication utilizing one or more communication methods and or communication protocols such as Bluetooth, Wi-Fi, IP, 802.XX, cellular, and other methods

means for selecting a first communication method and or a first communication protocol,

means for communication with a first communication method and or a first communication protocol;

means for selecting a second communication method and or a second communication protocol;

means for communication with a second communication method and or a second communication protocol; including

means for switching from a first communication method and or a first communication protocol to a second communication method and or a second communication protocol dynamically or at the selected time;

means for executing communication, computation, command, control and other functions for a selected utility to the mobile device user utilizing one or more communication methods and or communication protocols in a standalone manner leveraging the processing, storage, database and lookup tables maintained within the mobile device itself and or in conjunction with a central server, a local server, a network server or a combination thereof.

19. A mobile communication system of claim 18 comprising

means for dynamically sensing a communication method and or a communication protocol,

means for switching from a first communication method and or a first communication protocol to said sensed second communication method and or a second communication protocol dynamically or at the selected time;

means for executing communication, computation, command, control and other functions seamlessly for a selected utility to the mobile device user utilizing one or more communication methods and or communication protocols in a standalone manner leveraging the processing, storage, database and lookup tables maintained within the mobile device itself and or in conjunction with a central server, a local server, a network server or a combination thereof.

Ex.1002
APPLE INC. / Page 14 of 610

20. A mobile device communication system of 14 comprising

a mobile device configured with one or more input and output channels of communication,

a central server,
means for wired or wireless communication between a mobile device and a central server,

means for selecting and configuring one or more input and output channels of a mobile device for a selected communication and utility,

means for voice communication on a selected first channel of a mobile device,

means for data, audio, video or other communications on selected same or different channel of a mobile device,

means for sequential or simultaneous communication on a selected communication channel by multiplexing the same channel or utilizing alternate channels;

means for a plurality of communication methods, communication types and functions on a selected channel;

means for utilizing one or more input and output channels of a mobile device for a selected function and or utility in conjunction with the capabilities of the mobile device by itself and or in conjunction with the capabilities of a central server, a local server, a network server or a combination thereof.

21. A mobile device communication system of claim 20 further comprising

means for enabling the mobile device for voice and data communication on one or more selected input and output channels ;

means for enabling the mobile device for communication of audio, video, data, broadcast and or other communication on one or more input and output channels,

means for enabling dynamic reconfiguration by means of functional instructions, program instructions and or other means wherein the instructions are resident on the mobile device and or the servers,

means for dynamically or at a desired time selecting the desired communication parameters such as the frequency, power and communication protocols for reconfiguring one or more input and output channels; including

means for dynamically or at a desired time altering and modifying the full or partial functionality of the mobile device in a stand alone manner using the processing power, storage and data bases of the mobile device in a stand alone manner and or in conjunction with the processing power, storage and data bases of the local, central and or network servers; including

Ex.1002
APPLE INC. / Page 15 of 610

means for altering and modifying the functionality of the desired input and output channels of the mobile device; including

means for multiplexing one or more of the input and one or more of the output channels for the desired communication, computation, command and control functions; further including

means for dynamically and or at the desired time configuring the mobile device for a plurality of interfaces for one or more types of input, output and display.

22. A mobile device communication system of claim 20 comprising

means for dynamic signaling and sensing of the communication environment, the communication methods, communication parameters and or the functional instructions, by radio frequency signaling and or other methods;

means for enabling disparate communication methods by dynamically adjusting communication parameters such as the frequency of transmission/receiving, power levels and other parameters which are best suited to a specific environment by functional instructions or other means,

means for dynamic switching of the communication parameters for transition from one communication environment and or communication method to another;

means for enabling a single mobile device to perform a plurality of same or disparate functions on one or more channels;

means for a mobile device to transform itself dynamically to execute a multiplicity of desired functions, on one or more input and output channels, by utilizing the processing power and software resident in the mobile device itself and or in conjunction with the processing power and software resident on the servers.

23. A mobile device communication system of claim 20 comprising

means for dynamically and independently tuning one or more input and output channels of the mobile device,

means for dynamically and independently tuning the input and output channels based on various parameters such as power, frequency, signal to noise ratio, desired and allowable error rates for data transfer and other factors;

means for dynamically optimizing the performance of the mobile device for efficient operation in the desired environment.

Ex.1002
APPLE INC. / Page 16 of 610

24. A mobile device communication system of claim 20 comprising

means for the mobile device to bypass the public carrier operating frequencies for voice and or data communication on one or more input and output channels;

means for communication of voice and data using the desired home, office, factory, transportation system or other operating frequencies using the desired input and output channels of the mobile device; and or

means for contemporaneous operation on public carrier and or private carrier frequencies on the selected input and output channels of the mobile device.

25. A mobile device communication system of claim 20 comprising

a Global Positioning Server,

means of wired or wireless communication with the GPS server,

means for determining the geographical location of the mobile device,

means for sensing the macro and micro communication environments in a selected environment and location wherein the mobile device is present,

means for dynamically selecting the desired communication methods and communication parameters on one or more input and output channels of the mobile device,

means for enabling the desired communication on one or more input and output channels of the mobile device.

26. A mobile device communication system of claim 20 comprising

means for the mobile device to be enabled with a sleep mode and or watch dog mode on one or more input and output channels,

means for instantaneously switching from a sleep mode and or watch dog mode to an active mode on one or more desired input and output channels of the mobile device,

means for sensing the communication environment by the mobile device,

means for the mobile device to sense other mobile devices,

means for the mobile device to sense using a plurality of communication methods inclusive of radio frequency and or other means,

means for the mobile device to sense one or more servers,

means for the mobile device to execute the desired communication and desired functions at the desired time and in the desired sequence.

27. A mobile device communication system of claim 20 comprising

means for the mobile device to operate in a wireless manner on one or more input and output channels,

means for the same mobile device to operate in a wired manner on one or more input and output channels

means for the selection and enabling of the desired input and output channels of the mobile device for wired or wireless communication.

28. A mobile device communication system of claim 20 comprising

means for enabling a selection of a plurality of communication modes on one or more input and output channels of the mobile device,

means for selecting and enabling a primary communication mode on one or more input and output channels of the mobile device,

means for selecting and enabling a secondary communication mode on one or more input and output channels of the mobile device,

means for enabling a hierarchy of communication modes on a mobile device for communication at a desired time and in desired order on one or more input and output channels,

means for instantaneously, dynamically or in a delayed manner enabling the desired communication mode on the desired input and output channel of the mobile device.

29. A mobile device communication system comprising

a mobile device,

local, central and or network servers,

means for wired or wireless communication using public carrier communication loops, private carrier communication loops, office/factory communication loops and home communication loops, said loops operating with same or disparate communication methods and or communication parameters for wired or wireless communication in a selected environment;

means for the mobile device to instantaneously recognize the communication environment and determine the nature of the public, private, office, factory, transportation or home carrier communication methods and communication parameters,

means for selecting instantaneously and or at a desired time and switching the carrier(s) for desired communication on a desired input and output communication channel of the mobile device;

Ex.1002
APPLE INC. / Page 18 of 610

means for operation with one single mobile device in multiple carrier environments on one or more input and output channels of the mobile device;

means for operation by the mobile device in a standalone manner and or in conjunction with a local, central and or network server.

30. A mobile device communication system of claim 29 comprising

means for voice, data and video communication on one or more channels of the mobile device,

means for maintaining a plurality of functional instructions on the mobile device and or the network servers,

means for enabling the mobile device to be configured for wired or wireless remote command and control applications such as TV, entertainment, gaming, appliance control, intelligent appliance control, intelligent sensing and control, intelligent equipment control and other control applications for the home, office, transportation systems, factory and other applications;

means for a plurality of same or different control applications being enabled sequentially or contemporaneously on one or more input and output channels of the mobile device;

means for enabling the control applications using the processing power, storage and databases of the mobile device by itself and or in conjunction with the processing power, storage and databases of the local, central and or network server.

31. A mobile device communication system of claim 29 comprising

means for voice, data and video communication on one or more channels of the mobile device,

means for maintaining a plurality of functional instructions on the mobile device and or the network servers,

means for dynamically configuring the mobile device with a plurality of functional instructions on one or more channels;

means for enabling the emulation of the mobile device for one or more same or disparate functions;

means for enabling the mobile device to emulate and perform the functions of a cordless telephone, a cellular telephone, a PDA, an Internet Protocol based IP telephone and other disparate computation, communication, command and control device functions on one or more input and output channels of the mobile device;

means for the communication, command, control and computation functions to be emulated and enabled by using the processing power/storage and databases of the mobile device by itself and or in conjunction with the processing power, storage and databases of the local, central and or network server.

32. A mobile device communication system of claim 29 comprising

means for the mobile device to be dynamically assigned a plurality of identification numbers,

means for the identification means to include a plurality of identification methods such as telephone numbers, static IP address number, dynamic IP address number and other numbers;

means for the mobile device to be dynamically configured for voice and data communication,

means for using one or more of the telephone numbers and other identification numbers sequentially or contemporaneously on the same mobile device for desired communication,

means for recognizing and relating the incoming and outgoing communications with the telephone number means and or other identification number means by visual, audible and other input, output, display and interface methods;

means for communication on one or more input and output channels of the mobile device with same or disparate identification numbers and or communication methods; and or

means for dynamically configuring the mobile device for communication and operation using the Internet Protocol, IP, based communication methods and or non IP based communication methods, on one or more input and output channels of the mobile device, for sequential or contemporaneous use

means for dynamically switching between the IP mode and non IP mode for communication on one or more input and output channels of the mobile device by software means, functional instructions or other methods,

means for dynamically enabling the communications of voice, audio, video and data in the IP mode and or non IP mode on the mobile device by utilizing software means, functional instructions means and or other methods with or without altering the hardware configuration of the mobile device

means for enabling the operation in the IP mode and or non IP mode by using the processing power, storage and databases of the mobile device in a standalone manner and or in conjunction with the processing power, storage and databases of the local, central and or network server.

33. A mobile device communication system comprising

a mobile device,

a central server,

a network control box having one or more input and output channels located with an office, home, factory, office buildings or other locations,

means for wired or wireless communication by the network control box on one or more channels using one or more communication methods and associated communication parameters;

Ex.1002
APPLE INC. / Page 20 of 610

means for selection and operation of the channels of the network box at one or more transmit and receive frequencies, power levels, signal to noise ratios and bandwidths;

means for interfacing between the mobile device and the network control box by using wired or wireless communication methods in a bilateral manner and or in conjunction the local, central and or network server; including

means for the network control box to operate at one or more public carrier, private carrier, office loop, home loop and other communication frequencies and modes;

means for the mobile device to operate in conjunction with the network box by selecting the desired communication mode and the communication loop appropriate for the intended communication on the selected input and or output channels of the mobile device and or the selected input/output channels of the network control box;

means for managing the operation of the network control box by functional instructions resident within the network control box and or derived from the mobile device acting by itself and or in conjunction with functional instructions resident on a central server, a local or network server;

means for the network control box input and output channels to be dynamically configured for communication in same or different communication modes,

means for configuring the network control box for desired utility by the mobile device acting in a stand alone manner and or in conjunction with the local, central and or network server.

34. A mobile device communication system of claim 33 comprising

means for the network control box to dynamically sense a mobile device operating within range of the network control box;

means for the mobile device to dynamically sense a network control box operating within range of the mobile device;

means for the mobile device and the network control box to recognize, authenticate and enable communication with each other;

means for dynamic switching from a first set of communication methods and communication protocols to a second set of communication methods and communication protocols that are acceptable for the mobile device user and the network control box;

means for seamless and dynamic operation of the mobile device in a plurality of environments and locations for a selected utility to the mobile device user utilizing the capabilities of the mobile device and a network control box or utilizing the capabilities of the mobile device, the network control box, a central server, a local server, a network server or a combination thereof.

Ex.1002
APPLE INC. / Page 21 of 610

35. A mobile device communication system of claim 34 comprising

a plurality of mobile devices,

means for a first mobile device to communicate with the network control box utilizing a first communication method and or a first communication protocols;

means for a second mobile device to communicate with the network control box utilizing a second communication method and or a second communication protocols;

means for the network control box to seamlessly enable communication between the first mobile device and the second mobile device utilizing same or disparate communication methods and or communication protocols;

means for switching and or translation including communication method translations and or protocol translations from a first communication method/protocol to a second communication method/protocol within the network control box itself and or performing said functions in conjunction with a central server, a local server, a network server or a combination thereof wherein said switching and translation instructions and algorithms reside within the network control box and or one or more servers;

means for dynamic and seamless communication between a plurality of communication devices utilizing same or disparate communication methods and or communication protocols utilizing the capabilities of the mobile devices by themselves in conjunction with each other, in conjunction with the network control box and or in conjunction with a central server, a local server, a network server or a combination thereof.

Ex.1002
APPLE INC. / Page 22 of 610

REMARKS

The attached claims are central to the original specification and the drawings therein filed on as application number 09/591, 389 filed on 06/09/2000. The applicant respectfully submits that Levac even if combined with Houde does not teach the features, claimed by Rao et al. Examination of these claims is respectfully requested.

Respectfully submitted,

Raman K Rao

By
Raman K. Rao, Applicant

Raman K. Rao
3099 Alexis Drive,
Palo Alto, CA 94304-1304
Telephone: (650) 941-7096
Fax: (650_ 618-1553

Ex.1002
APPLE INC. / Page 23 of 610

PATENT APPLICATION FEE DETERMINATION RECORD
Effective October 1, 2004

Application or Docket Number: 10911211

CLAIMS AS FILED - PART I

	(Column 1)	(Column 2)
TOTAL CLAIMS	23	
FOR	NUMBER FILED	NUMBER EXTRA
TOTAL CHARGEABLE CLAIMS	23 minus 20=	* 3
INDEPENDENT CLAIMS	4 minus 3 =	* 1
MULTIPLE DEPENDENT CLAIM PRESENT		☐

* If the difference in column 1 is less than zero, enter "0" in column 2

SMALL ENTITY TYPE ☐		OR	OTHER THAN SMALL ENTITY	
RATE	FEE		RATE	FEE
BASIC FEE	395.00	OR	BASIC FEE	790.00
X$ 9=	27	OR	X$18=	
X44=	44	OR	X88=	
+150=		OR	+300=	
TOTAL	466	OR	TOTAL	

CLAIMS AS AMENDED - PART II

AMENDMENT A

	(Column 1) CLAIMS REMAINING AFTER AMENDMENT		(Column 2) HIGHEST NUMBER PREVIOUSLY PAID FOR	(Column 3) PRESENT EXTRA
Total	*	Minus	**	=
Independent	*	Minus	***	=
FIRST PRESENTATION OF MULTIPLE DEPENDENT CLAIM				☐

SMALL ENTITY		OR	OTHER THAN SMALL ENTITY	
RATE	ADDITIONAL FEE		RATE	ADDITIONAL FEE
X$ 9=		OR	X$18=	
X44=		OR	X88=	
+150=		OR	+300=	
TOTAL ADDIT. FEE		OR	TOTAL ADDIT. FEE	

AMENDMENT B

	(Column 1) CLAIMS REMAINING AFTER AMENDMENT		(Column 2) HIGHEST NUMBER PREVIOUSLY PAID FOR	(Column 3) PRESENT EXTRA
Total	*	Minus	**	=
Independent	*	Minus	***	=
FIRST PRESENTATION OF MULTIPLE DEPENDENT CLAIM				☐

RATE	ADDITIONAL FEE		RATE	ADDITIONAL FEE
X$ 9=		OR	X$18=	
X44=		OR	X88=	
+150=		OR	+300=	
TOTAL ADDIT. FEE		OR	TOTAL ADDIT. FEE	

AMENDMENT C

	(Column 1) CLAIMS REMAINING AFTER AMENDMENT		(Column 2) HIGHEST NUMBER PREVIOUSLY PAID FOR	(Column 3) PRESENT EXTRA
Total	*	Minus	**	=
Independent	*	Minus	***	=
FIRST PRESENTATION OF MULTIPLE DEPENDENT CLAIM				☐

RATE	ADDITIONAL FEE		RATE	ADDITIONAL FEE
X$ 9=		OR	X$18=	
X44=		OR	X88=	
+150=		OR	+300=	
TOTAL ADDIT. FEE		OR	TOTAL ADDIT. FEE	

* If the entry in column 1 is less than the entry in column 2, write "0" in column 3.
** If the "Highest Number Previously Paid For" IN THIS SPACE is less than 20, enter "20."
***If the "Highest Number Previously Paid For" IN THIS SPACE is less than 3, enter "3."
The "Highest Number Previously Paid For" (Total or Independent) is the highest number found in the appropriate box in column 1.

UNITED STATES PATENT AND TRADEMARK OFFICE

10/911,211

COMMISSIONER FOR PATENTS
UNITED STATES PATENT AND TRADEMARK OFFICE
P.O. BOX 1450
ALEXANDRIA, VA 22313-1450
www.uspto.gov

Paper No.

Notice of Non-Compliant Amendment (37 CFR 1.121)

The amendment document filed on 8-3-04 is considered non-compliant because it has failed to meet the requirements of 37 CFR 1.121, as amended on June 30, 2003 (see *68 Fed. Reg. 38611*, Jun. 30, 2003). In order for the amendment document to be compliant, correction of the following item(s) is required. **Only the corrected section of the non-compliant amendment document must be resubmitted (in its entirety), e.g., the entire "Amendments to the claims" section of applicant's amendment document must be re-submitted.** 37 CFR 1.121(h).

THE FOLLOWING CHECKED (X) ITEM(S) CAUSE THE AMENDMENT DOCUMENT TO BE NON-COMPLIANT:

☐ 1. Amendments to the specification:
- ☐ A. Amended paragraph(s) do not include markings.
- ☐ B. New paragraph(s) should not be underlined.
- ☐ C. Other_____

☐ 2. Abstract:
- ☐ A. Not presented on a separate sheet. 37 CFR 1.72.
- ☐ B. Other_____

☐ 3. Amendments to the drawings: _____

☑ 4. Amendments to the claims:
- ☐ A. A complete listing of all of the claims is not present.
- ☐ B. The listing of claims does not include the text of all claims (including withdrawn claims)
- ☐ C. Each claim has not been provided with the proper status identifier, and as such, the individual status of each claim cannot be identified.
- ☐ D. The claims of this amendment paper have not been presented in ascending numerical order.
- ☐ E. Other: _____

For further explanation of the amendment format required by 37 CFR 1.121, see MPEP Sec. 714 and the USPTO website at http://www.uspto.gov/web/offices/pac/dapp/opla/preognotice/officeflyer.pdf .

If the non-compliant amendment is a **PRELIMINARY AMENDMENT,** applicant is given ONE MONTH from the mail date of this letter to supply the corrected section which complies with 37 CFR 1.121. Failure to comply with 37 CFR 1.121 will result in non-entry of the preliminary amendment and examination on the merits will commence without consideration of the proposed changes in the preliminary amendment(s). This notice is not an action under 35 U.S.C. 132, and **this ONE MONTH time limit is not extendable.**

If the non-compliant amendment is a reply to a **NON-FINAL OFFICE ACTION (including a submission for an RCE),** and since the amendment appears to be a *bona fide* attempt to be a reply (37 CFR 1.135(c)), applicant is given a TIME PERIOD of ONE MONTH from the mailing of this notice within which to re-submit the corrected section which complies with 37 CFR 1.121 in order to avoid abandonment. **EXTENSIONS OF THIS TIME PERIOD ARE AVAILABLE UNDER 37 CFR 1.136(a).**

If the amendment is a reply to a **FINAL REJECTION,** this form may be an attachment to an Advisory Action. **The period for response to a final rejection continues to run from the date set in the final rejection**, and is not affected by the non-compliant status of the amendment.

Irina Steputa — Legal Instruments Examiner (LIE)

571/272-1627 — Telephone No.

Rev. 10/03

UNITED STATES PATENT AND TRADEMARK OFFICE

UNITED STATES DEPARTMENT OF COMMERCE
United States Patent and Trademark Office
Address: COMMISSIONER FOR PATENTS
P.O. Box 1450
Alexandria, Virginia 22313-1450
www.uspto.gov

APPLICATION NUMBER	FILING OR 371 (c) DATE	FIRST NAMED APPLICANT	ATTORNEY DOCKET NUMBER
10/911,211	08/03/2004	Raman K. Rao	31

CONFIRMATION NO. 7409

Raman Rao
3099 Alexis Drive
Palo Alto, CA 94304

FORMALITIES LETTER

OC000000014019816

Date Mailed: 10/06/2004

NOTICE OF INCOMPLETE NONPROVISIONAL APPLICATION

FILED UNDER 37 CFR 1.53(b)

A filing date has NOT been accorded to the above-identified application papers for the reason(s) indicated below.

All of the items noted below **and a newly executed oath or declaration covering the items must** be submitted within **TWO MONTHS** of the date of this Notice, unless otherwise indicated, or proceedings on the application will be terminated *(37 CFR 1.53(e))*. Replies should be mailed to: Mail Stop Missing Parts, Commissioner for Patents, P.O. Box 1450, Alexandria VA 22313-1450.

The filing date will be the date of receipt of all items required below, unless otherwise indicated. Any assertions that the item(s) required below were submitted, or are not necessary for a filing date, must be by way of petition directed to the attention of the Office of Petitions accompanied by the $130.00 petition fee *(37 CFR 1.17(h))*. If the petition states that the application is entitled to a filing date, a request for a refund of the petition fee may be included in the petition. Petitions should be mailed to: Mail Stop Petitions, Commissioner for Patents, P.O. Box 1450, Alexandria VA 22313-1450.

- The specification is missing.
  A complete specification as prescribed by 35 U.S.C. 112 is required.

- The statutory basic filing fee is missing.
  Applicant must submit $ **395** *to complete the basic filing fee for a small entity.*

The applicant needs to satisfy supplemental fees problems indicated below.

The required item(s) identified below must be timely submitted to avoid abandonment:

- Additional claim fees of **$71** as a small entity, including any required multiple dependent claim fee, are required. Applicant must submit the additional claim fees or cancel the additional claims for which fees are due.

SUMMARY OF FEES DUE:

Total additional fee(s) required for this application is **$466** for a Small Entity

- **$395** Statutory basic filing fee.

- Total additional claim fee(s) for this application is **$71**

- **$44** for **1** independent claims over 3.
- **$27** for **3** total claims over 20.

Replies should be mailed to: Mail Stop Missing Parts
Commissioner for Patents
P.O. Box 1450
Alexandria VA 22313-1450

A copy of this notice MUST be returned with the reply.

Customer Service Center
Initial Patent Examination Division (703) 308-1202

PART 3 - OFFICE COPY

10-15-04

ITW

UNITED STATES PATENT AND TRADEMARK OFFICE

UNITED STATES DEPARTMENT OF COMMERCE
United States Patent and Trademark Office
Address: COMMISSIONER FOR PATENTS
P.O. Box 1450
Alexandria, Virginia 22313-1450
www.uspto.gov

APPLICATION NUMBER	FILING OR 371 (c) DATE	FIRST NAMED APPLICANT	ATTORNEY DOCKET NUMBER
10/911,211	08/03/2004	Raman K. Rao	31

OIPE JC16 OCT 13 2004 PATENT & TRADEMARK OFFICE

CONFIRMATION NO. 7409

FORMALITIES LETTER

OC0000000014019816

Raman Rao
3099 Alexis Drive
Palo Alto, CA 94304

10/18/2004 LHONDIM1 00000051 10911211

01 FC:2001 395.00 OP
02 FC:2201 44.00 OP
03 FC:2202 27.00 OP

Date Mailed: 10/06/2004

NOTICE OF INCOMPLETE NONPROVISIONAL APPLICATION

FILED UNDER 37 CFR 1.53(b)

A filing date has NOT been accorded to the above-identified application papers for the reason(s) indicated below.

All of the items noted below **and a newly executed oath or declaration covering the items must** be submitted within **TWO MONTHS** of the date of this Notice, unless otherwise indicated, or proceedings on the application will be terminated *(37 CFR 1.53(e))*. Replies should be mailed to: Mail Stop Missing Parts, Commissioner for Patents, P.O. Box 1450, Alexandria VA 22313-1450.

The filing date will be the date of receipt of all items required below, unless otherwise indicated. Any assertions that the item(s) required below were submitted, or are not necessary for a filing date, must be by way of petition directed to the attention of the Office of Petitions accompanied by the $130.00 petition fee *(37 CFR 1.17(h))*. If the petition states that the application is entitled to a filing date, a request for a refund of the petition fee may be included in the petition. Petitions should be mailed to: Mail Stop Petitions, Commissioner for Patents, P.O. Box 1450, Alexandria VA 22313-1450.

✓ o The specification is missing.
A complete specification as prescribed by 35 U.S.C. 112 is required.

✓ o The statutory basic filing fee is missing.
Applicant must submit $ **395** *to complete the basic filing fee for a small entity.*

The applicant needs to satisfy supplemental fees problems indicated below.

The required item(s) identified below must be timely submitted to avoid abandonment:

o Additional claim fees of **$71** as a small entity, including any required multiple dependent claim fee, are required. Applicant must submit the additional claim fees or cancel the additional claims for which fees are due.

SUMMARY OF FEES DUE:

✓

Total additional fee(s) required for this application is **$466** for a Small Entity

✓ o **$395** Statutory basic filing fee.

✓ Total additional claim fee(s) for this application is **$71**

- **$44** for **1** independent claims over 3.
- **$27** for **3** total claims over 20.

Replies should be mailed to: Mail Stop Missing Parts
Commissioner for Patents
P.O. Box 1450
Alexandria VA 22313-1450

A copy of this notice MUST be returned with the reply.

Customer Service Center
Initial Patent Examination Division (703) 308-1202
PART 2 - COPY TO BE RETURNED WITH RESPONSE

OIPE JC79
OCT 13 2004
PATENT & TRADEMARK OFFICE

10/13/04

Mail Stop Missing Parts
Commissioner for Patents
P.O. BOX 1450
ALEXANDRIA, VA 22313-1450

Reference: Application Number: 10/911,211 Filed: 08/03/2004
REQUEST FOR THE GRANT OF THE FILING DATE OF 8/3/04

Dear Sir,

Enclosed are the missing parts namely the specification and figures. Also included is credit card payment form in the amount of $466.

The applicant respectfully requests the grant of the filing date of 8/3/2004 for this divisional application, as the specifications and drawings are identical to the original application 09/591,381 filed on 06/09/2000. The specification and drawings were inadvertently left out at the time of filing the divisional application on 8/3/2004.

Please let me know if any fees and information is due.

Raman K. Rao
Applicant and Applicants Representative

Raman K. Rao
3099 Alexis Drive, CA 94304
Tel: 650 941 7096
Fax: 650 618 1553

OCT 13 2004
PATENT & TRADEMARK OFFICE

DYNAMICALLY CONFIGURABLE IP BASED WIRELESS DEVICE AND WIRELESS NETWORKS

By: Raman K. Rao
Sunil K. Rao
Sanjay K. Rao

CROSS REFERENCE TO RELATED APPLICATIONS

The present application is a continuation-in-part of copending application entitled INTELLIGENT KEYBOARD SYSTEM, Serial No. 09/281,739, filed June 4, 1999, which is a continuation-in-part application of a now abandoned application entitled A SYSTEM LEVEL SCHEME TO CONTROL INTELLIGENT APPLIANCES, Serial No. 08/764,903 filed December 16, 1996.

BACKGROUND OF THE INVENTION

Wireless devices are made to operate at a single set frequency to transmit and receive on a narrow frequency band. The ability to transmit/receive (T/R) and the protocols for executing the T/R function are primarily set in the hardware and are physically set for each mobile device (MD). Some mobile devices (MD) include the ability to reconfigure the MD for different environments and applications in cases where it is required that the phone be able to operate in these other environments and applications.

There is often a proliferation of mobile devices that must be carried by a user. For example, a user may need a device or remote for the public airwaves (cell phone), another for the local or office network and yet another for the home network such as wireless telephones, as well as controllers for TVs and other intelligent appliances. The present art offers limited Internet access and pager functions on some cell phones. Merely offering Internet access and pager functions is not a solution to the problem involved, such as relieving the proliferation of devices.

There is a need for a method to bypass the public wireless carrier, such as cell phones, for wireless telephones for local office or home networks where the public carrier services are not being utilized, without changing devices. This avoids the proliferation of devices mentioned before.

SUMMARY OF THE INVENTION

It is an object of the present invention to provide a wireless communication and control system including a universal wireless device. There is a central server for storing communication protocols and control protocols. The central server communicates the communication protocols and selectively communicates the control protocols between the wireless device and the central server. The communication protocols configure the system for communication and the control protocols configure the system as one of an arbitrary number of intelligent appliance controllers. Alternately the control protocols configure the system as one of a selection of Internet terminals. The wireless device may be, for example, a hand-held computing device, wireless telephone, or cellular phone.

Other objects, features and advantages of the present invention will become apparent from the following detailed description when taken in conjunction with the accompanying drawings.

BRIEF DESCRIPTION OF THE DRAWING

The accompanying drawings, being incorporated in and forming a part of this specification, illustrate embodiments of the invention and, together with the description, serve to explain the principles of the present invention:

FIG. 1 is an embodiment illustrating different wireless devices.

FIG. 2 is an embodiment of a comprehensive wireless networking scheme.

FIG. 3 is an embodiment showing how a server is incorporated in the system.

FIG. 4 is an embodiment showing how modes and environments may be mapped.

FIG. 5 is an embodiment of a network control box.

FIG. 6 is an embodiment illustrating the various parts of a server.

FIG. 7 is an embodiment with tables illustrating the dynamic reconfiguration of frequency, power, and bandwidth.

DESCRIPTION OF THE PREFERRED EMBODIMENTS

Reference will now be made in detail to preferred embodiments of the invention, with examples illustrated in the accompanying drawings. The invention is described in conjunction with the preferred embodiments, however, it will be understood that the preferred embodiments are not intended to limit the invention. The invention is intended to cover alternatives, modifications and equivalents included, now or later, within the scope of the present invention as defined by the appended claims.

In the present invention, a cell phone acts as a radio, TV and pager to receive and transmit at different frequencies. In addition it is set to bypass the public wireless carrier for local office or home networks where the public carrier services are not required for communication.

The mobile device is dynamically software reconfigurable for the various environments. An example is such as the public networks in one or more countries, which may operate at different frequencies. Another example is found in the office, such as at one or more office locations operating at different frequencies, or in the home. It is desirable that the MD be dynamically tuned for transmit and receive functions suitable for each environment. For example, current wireless conditions may be determined by sensing the signal to noise ratio and the bit error rate. These parameters are a part of an error detection, error correction (EDEC) system in an embodiment of the system of the present The allowed power/channel bandwidth for a given environment or operating mode will be determined, for example, from a table in Server C. This would allow a phone in the USA to work on GSM, as an example. In the present invention a phone or other wireless device can be a remote TV controller, garage controller, or similar intelligent appliance. It can be a cordless phone.

The system of the present invention, including a wireless device forming a part of the system can work with, for example, GPS, or with public wireless location systems, to improve locating capabilities. For instance, since both the home and office network units/boxes are at known locations, tuning a CT/MD for operation as a GPS receiver, or other locating system, to the network units/boxes would give a precise location with respect to the home or office units/boxes. There are two possible locations for only two stations. Normally, therefore, three stations are required, but in many cases, for a CT/MD, one of the two locations is known to be invalid. For example, the location is known well enough to automatically rule out one location. In this case, the location will

Ex.1002
APPLE INC. / Page 33 of 610

be precisely known from only the office and home network boxes, or from these units/boxes with respect to a public wireless station, or with respect to a satellite, or both. This software based configuration is available from the network, such as from a server C located on the Internet that enables dynamic reconfiguration anywhere in the world for a CT/MD.

The MD is able to sense which environment it is primarily operating in at a given moment while maintaining the ability to switch instantaneously to a different environment. It has the ability to be in a watchdog or sleep mode in different environments while very active in a given environment at a particular time. This allows the MD to be very useful in one or more environments as the use dictates.

The same MD can be a part of the wired network and one or more wireless networks obviating the need for multiple devices. The MD operates in the IP mode (Internet Protocol) in the wired or wireless domains. The invention also deals with either wired or wireless network control/management units such as a multichannel, multiplexing transmit/receive (T/R) device – referred to also as a network unit or box – when they exist in each environment.

The present invention deals with any wired or wireless network box as a dynamically configurable device utilizing the power of the Internet and a central server C working alone or in tandem with other servers where ever they are located, and local or Internet based network boxes. This is illustrated using a cellular telephone but is fully extendable to all mobile devices.

FIG. 1 illustrates embodiments of a cellular telephone (CT) and a mobile device (MD). In FIG. 1, CT 102 is representative of the type of phone useful for the improved uses of the present invention. It will be clear to those of ordinary skill in the art that physical changes to the CT are not required. MD 104 is representative of the type of MD useful for the improved uses of the present invention, and as with the CT does not require physical changes. Wireless device (WD) 106 represents another embodiment of the CT and/or MD, and also will require no physical changes to implement the improvements of the present invention.

FIG 2A is an illustration of an embodiment of a communication and control system 200. In FIG. 2A:

Cellular telephone or mobile device (CT/MD) 202 working in a domain 200 is highlighted in Figure 2. In this embodiment the primary mode is through a public carrier 208.

The cellular phone (CT) 202 can initiate wireless IP connection 204 to the Internet 206 via the public carrier 202 at a set frequency, Fp 208, designated by the carrier and tuned for T/R for that particular carrier's FCC approved frequency band of operation. The carrier senses the T/R and makes either wired or wireless connections 210 to the Internet via an Internet backbone connection 212 to a desired Server C 214 or any web site 216 as defined by a URL request 224 of the CT/MD 202.

When a CT/MD 202 wishes to use the services of Server C 214, the Server C 214 delivers the content or performs functions as requested by the CT/MD 202.

A CT/MD 202 can store profiles and other user specific information on the Server C 214.

Server C 214 can be used to keep the various "functional instruction sets" (FIS) and software (S/W) 218 for use by the CT/MD 202. The FIS and software 218 resident on Server C 214 will serve to provide the primary repository/exchange to deliver various mode reconfiguration requests to the CT/MD 202. For example, the CT/MD 202 may send a request to the Server C 214 for configuration as a cell phone because it is not in the home environment. In this mode the CT/MD 202 may still receive inputs/outputs from to the local office loop network box or the home network box via the public carrier channel 208.

The ability to sense and switch from one mode to the other may include linking 222 to a Global Positioning System (GPS) 220 that determines the exact location of the CT/MD 202. Thus the CT/MD 202 may sense (or the appropriate network box at the office or home may sense) the location of the network box or the net to bring the CT/MD 202 into any local or carrier loop 208.

The CT/MD 202 in conjunction with the Server C 218 can decide the preferred mode to be in. There may be a primary mode and several secondary modes or a hierarchy of modes. The primary mode may switch from local office FIG. 2B to a public carrier loop 208, followed by a home loop FIG. 2C. This switching may be automatic or per specific functional instruction sets 218 and preferences stored on the Server C 214 or in the CT/MD 202 itself.

FIG. 2B is an illustration of an embodiment of a Local Office Loop 230 in accordance with the present invention. In FIG. 2B, a local wireless office IP network 232, which could also be a

local area network (LAN) or other connectivity means, communicates with local servers 234. Servers 234 then connect on an as-needed basis with, for example, the world wide web (WWW).

The same CT/MD 202 can function in the local office loop 230 under the supervision of a local office wireless network switch or box 232.

The local office 230 can operate at the same or a different frequency for T/R. It is preferable for the local network box 232 and loop 230 to be at different frequencies that are geared toward a smaller area of influence. In that way the local network box 232 and loop 230 do not interfere with, for example, a public carrier frequency domain. The local network box 232 and loop 230 will be under the control of the local office – such as an office building or office campus.

The local wireless network switch or box 232 may operate at one or more frequencies. In this way, one of more channels will be devoted to a public carrier frequency 210 for T/R and one or more channels 208 will be devoted for T/R optimized for localized use in the campus or office building.

The CT/MD 202 when in the local office loop 236 can switch itself for optimal performance in the local office loop 230 by downloading/uploading FSI 218 and/or protocols in tandem with Server C 214.

Thus the CT/MD 202 can serve as a cordless phone in the local environment for interoffice phone calls or local area network 236 access working in tandem with a local network box 232.

In a similar fashion as described above, the CT/MD 202 also serves as a remote controller 270 for controlling intelligent office appliances 238 such as copiers and faxes.

FIG. 2C illustrates a CT/MD 202 in the home loop 260. In FIG. 2C, the CT/MD 202 communicates through an optional uplink/downlink such as a transmit/receive unit 262 to home server 264. Home server 264 controls Home Intelligent Appliances (HIAP) 266. In this way, the CT/MD 202 can be a TV remote 272, remote access 274 for an oven or microwave for starting/stopping an operation at a desired time, or perform other household duties.

The same CT/MD 202 will function in the local home loop 260 under the supervisory control of a home network box 262 able to T/R in a specific home frequency band.

Ex.1002
APPLE INC. / Page 36 of 610

The home wireless network box 262 operates at same or different frequency of T/R as a public carrier 210. However, it is desirable to have different frequency of T/R optimized for home area wireless networks.

The local home wireless network box 262 may operate at one or more public carrier frequencies 210 and one or more local home wireless network box frequencies 268.

The CT/MD 202 when in the home wireless network mode may switch itself for this task for optimal performance by downloading/uploading FIS 218 (function instruction software) and/or protocols in tandem with Server C 214.

The CT/MD 202 may serve as a cordless phone (connected or hooked into a landed telephone line as an example, and operating as a telephone or as an IP phone) in the home wireless network loop 260 because it is now configured by the FIS 218. Also, the CT/MD 202 may be emulated by a cordless phone, such as by being configured with the FIS 218, allowing the functions of the CT/MD 202 to be performed without wasting air time. When the CT/MD 202 is being emulated by a cordless telephone, the cordless telephone base station may also be emulated by, for example, home server 264, such as by inserting a memory card to reconfigure the home server 264. One CT/MD 202, even when being emulated by, for example, a cordless phone, serves many purposes as opposed to requiring many telephone hand sets (one for the home, one for the office, and one for the car, as an example). Paging from one phone to the other in the wireless home network may be done very easily. All you need to carry is your CT/MD 202, real or emulated, which doubles as a regular telephone hand set.

In a similar fashion as described above, the CT/MD 202 may serve as a remote controller for various IP based intelligent wireless or wired home appliances 266. The TV may be controlled using the cell phone if the TV set is capable of receiving wireless commands. Opening the garage door may be done with a macro command downloaded from the Central Server C 214.

Any set of "macro commands" and or detailed FIS 218 may be written for specific wireless intelligent appliances 266 or wireless intelligent equipment 238 to control/command all of these using the CT/MD 202 in conjunction with Server C 214.

The commands/instructions are keypad, textual, sound or voice actuated and can be in one or more languages, such as Chinese, English or any other language supported.

FIG. 3 illustrates how a CT/MD 302 cooperates with a Server C 306. In FIG. 3, internal structure 304 of CT/MD 302 shows how CT/MD 302 is organized for operation with Server C 306. Server C 306 also has instructions 308 as well as FIS 218 for allowing operation with CT/MD 302, and input/output paths 310 and 312 from Server C 306 for interfacing or transmitting and receiving from and to external devices such as intelligent appliances 266 or intelligent equipment 238.

FIG. 4 illustrates how the communication and control system 200 of the present invention is mapped 402, 404 to various modes. In FIG. 4 only primary, secondary and tertiary modes are shown in table 402 and in table 404, but more modes can be easily accommodated by simple extensions of the entries shown. In connection with FIG. 4:

i) The CT 202 wishes to be in the primary mode of the local wireless office loop 230 whereas it is currently in the public carrier wireless loop 200.
A request, menu or macro command is chosen by the CT 202 and a request for reconfiguration is sent to the Server C 214 via the wireless Internet 204 using frequency Fp and utilizing a public carrier 208.

ii) The Server C 214 looks up the functional instruction set 218 and maps the instruction set for transmission to the CT 202. The CT 202 processes the instruction set via the controller and processor electronics located within the CT 202 and loads the new FSI 218 into the memory block of the CT 202, and tunes/sets the frequencies within the T/R blocks to primary frequency Fp and secondary frequency Fl. Now the CT 202 is converted to the primary local office mode 230.

iii) The CT 202 is now operating in the local office 230 loop and can control/communicate with various units, appliances and equipment 238 within the loop working in tandem with the local wireless network box 232. Similar examples can be shown for home wireless network box 262.

iv) In the present invention Transmit and Receive frequencies may be tuned to one or more primary values and one or more subsidiary values.

v) The functional instruction sets 218 may be downloaded/uploaded from/to the central server C 214 for optimal performance in a given domain and may be downloaded/uploaded into the memory of the CT/MD 202.

Ex.1002
APPLE INC. / Page 38 of 610

vi) The secondary or subsidiary modes are active to instantly spring into action/service as needed without losing the full feature functionality. Thus the device 202 instantly becomes a cell phone in the public carrier network 210 upon receiving a signal even when it is operating in the local wireless network 208 loop.

vii) Server C 214 may keep watchdog functions alive when the CT 202 is in a different mode or is inactive to instantly deliver all the content that might have been sent in the meantime as though the CT 202 was in the public carrier 210 domain.

viii) Controller electronics within the CT/MD 202 work in tandem with Server C 214 to deliver the functionality and maintain the ability to switch modes and keep track of modes.

ix) The processor electronics within the CT/MD 202 along with the processing and software capability of Server C 214 is able to continually deliver all necessary processing horsepower and capability to device CT/MD 202.

x) The memory electronics within the CT/MD 202 keeps/caches instructions and other data in conjunction with Server C 214 to quickly execute tasks and efficiently update changes in models.

xi) The Transmitter and Receiver are independently tunable to one or more frequencies for operation in different environments based on the instructions of internal controller electronics and that of Server C 214.

FIG. 5 is an embodiment of the wireless communication and control system of the present invention with more detail of the network control box 500. Server C 214 is located at home 260, office 230 or other location 200 and has one or more assigned channels of inputs and outputs 502. Example: standard telephone line, cable, or standard public carrier cellular telephone frequency.

Other input and output channels 504 are each dynamically tunable, such as to specific power levels, channel bandwidths and frequencies of operation, for maintaining reliability and integrity and to receive/transmit wireless communications from/to one or more services.

Inputs and outputs 502, 504 are multiplexed for optimal assignment by the controller, Server C 214, based on requests and utilization/demand.

The network box 500 may have one or more static IP addresses and one or more dynamic IP addresses may be assigned by the network box 500 to a different MD/SD 202 in the wireless network 200, 230, 260.

The functional instruction sets 218 for configuration to different modes is maintained on a Central Server C 214 located on the Internet 206. The Server C 214 works in tandem with the controllers located within the CT/MD 202 or within the local or home wireless network switch/box 500 to dynamically configure the network switch 500 and the CT/MD 202. Both the CT/MD 202 and the wireless network control box 500 are dynamically configurable working in tandem with Server C 214 located on the Internet 206.

The present invention deals with the issues of functionality using a wired or wireless network box and the dynamically configurable device utilizing the power of the Internet. In accordance with the invention, a central server C 214 (one or more) works alone or in tandem with other local and Internet servers and local or other Internet based network boxes. This will be illustrated using a cellular telephone but is fully extendable to all mobile devices.

Cellular telephone or mobile device CT/MD 202 working in the domain 200, 230, 260 highlighted in FIG. 2A, FIG. 2B, and FIG. 2C. Primary mode is through public carrier 204.

CT 202 initiates wireless IP connection to the Internet 206 via the public carrier 204 at a set frequency, Fp 208, designated by the carrier and tuned for T/R for that particular carrier's FCC approved frequency band of operation. The carrier senses the T/R and makes either wired or wireless connections to the Internet 206 via the Internet backbone connection 212 to a desired Server C 214 or any web site 216 as defined by the CT/MD's URL request. CT/MD 202 completes the transaction as defined by this loop 200, 230, 260.

When CT/MD 202 wishes to use the services of Server C 214, the Server C 214 works to efficiently deliver the content or perform functions requested by CT/MD 202.

CT/MD 202 utilizes the profiles and other user specific information 218 stored on the Server C 214.

Server C 214 is used to keep the various "functional instruction set" and software 218 for use by CT/MD 202. This FIS and software 218 resident on Server C 214 will serve as the primary repository/exchange to deliver various mode reconfiguration requests to the CT/MD 202. For

example, the CT/MD 202 may send a request to the Server C 214 to be configured as a cell phone because it is not in the home environment 260. In this mode the CT/MD 202 may still receive inputs/outputs from to the local office loop network box 232 or the home network box 262, but this is via the public carrier channel 208.

The ability of a CT/MD 202 to sense and switch from one mode to the other may be linked to a Global Positioning System (GPS) 220 that determines the exact location of the CT/MD 202. The CT/MD 202 may sense (or the appropriate network box 232, 262 at the office or home may sense) the location of the network box 232, 262 or the net to bring the CT/MD 202 into any local or carrier loop.

The CT/MD 202 in conjunction with the Server C 214 decides the preferred mode to be in. There may be a primary mode and several secondary modes or a hierarchy of modes. The primary mode may be local office 232 and then the public carrier 204 loop, followed by the home 262 loop. This switching may be automatic or per specific functional instruction set 218 and preferences stored on the Server C 214 or in the CT/MD 202 itself.

FIG. 2B is an embodiment of a Local Office 230 Loop. In FIG. 2C a local wireless office IP network 232 communicates with a CT/MD 202 and with Office Servers 234. Office Servers 234 then connect to the Internet 206 and from there to Server C 214. Server C 214 then connects to websites and servers on the Internet 206 as required.

The CT/MD 202 functions in the local office 230 loop under the supervision of a local office wireless network switch or box 232.

The local office 230, such as a local network box 232, can operate at the same or different frequencies for T/R. It is preferable for the local network box 232 and loop 230 to be at different frequencies geared towards a smaller area of influence so as not to interfere with a public carrier frequency domain 210. This also allows the local network box 232 to be under the control of the local office 230 – such as an office building or office campus.

The local wireless network switch or box 232 operates at one or more frequencies with one or more channels devoted to public carrier frequencies 210 for T/R and one or more channels for T/R optimized for localized use 236 in the campus or office building.

The CT/MD 202, when in the local office 230 loop, switches itself for optimal performance in the local office 230 loop by downloading/uploading FIS 218 instructions and/or protocols in tandem with Server C 214.

In one embodiment the CT/MD 202 serves as a cordless phone in the local environment for interoffice phone calls or local area network 236 access working in tandem with local network box 232.

In a similar fashion as described above, the CT/MD 202 also serves as a remote controller for controlling intelligent office appliances 238 such as copiers and faxes.

FIG. 6 is an embodiment of the communication and control system 600 of the present invention. In FIG. 6, CT/MD 202 is being used in the home loop 260 and illustrates how a processor 602 and memory 604 form a controller 606 with a transmitter 608 and receiver 610 to provide the Server C 214 of the present invention.

The CT/MD 202 may function in the local home 260 loop under the supervisory control of a home network box 500 able to T/R at the specific home frequency band.

The home wireless network box 500 operates at the same or different frequencies of T/R as a public carrier. It is desirable to have different frequencies of T/R optimized for home area wireless networks.

The local home wireless network box operates at one or more public carrier frequencies and one or more local home wireless network box frequencies.

The CT/MD 202, when in the home wireless network 260 mode, switches itself for this task for optimal performance by downloading/uploading FIS 218 (function instruction software) and/or protocols in tandem with Server C 214.

The CT/MD serves as a cordless phone (connected or hooked into a landed telephone line, as an example) in the home wireless network loop because it is now configured to be so by the FIS. Thus one CT/MD serves many purposes such as replacing many telephone hand sets (one for the home, one for the office, and one for the car). Paging from one phone to the other in the wireless home network may be done very easily. The CT/MD doubles as a regular telephone hand set.

In a similar fashion as described above, the CT/MD may also serve as a remote controller for various IP based intelligent wireless or wired home appliances. The TV may be controlled using

the cell phone if the TV set is capable of receiving wireless commands/output. The electronic garage door opener may be a macro command downloaded from the Central Server C.

FIG. 7 is an embodiment of the communication and control system 700 of the present invention with tables demonstrating parameter setting for a CT/MD 202 or a Server C 214, such as for different configurations and environments. In FIG. 7, CT/MD 202 supports two frequencies in this embodiment, and both are dynamically changed in real time, including power output and channel bandwidth as well as frequency, in this embodiment. Table 702 represents the initial operating state, and table 704 represents the new operating state assumed by the CT/MD 202 or the Server C 214.

Any set of "macro commands" and or detailed FIS 218 may be written for specific wireless intelligent appliances 266 or equipment 238 to control or command all of these using the CT/MD 202 in conjunction with Server C 214. The control of the intelligent appliances 266 or intelligent equipment 238 is done in real time with dynamic reallocation of the environment as shown in tables 702 and 704.

The foregoing descriptions of specific embodiments of the present invention have been presented for purposes of illustration and description. They are not intended to be exhaustive or to limit the invention to the precise forms disclosed, and it should be understood that many modifications and variations are possible in light of the above teaching. The embodiments were chosen and described in order to best explain the principles of the present invention and its practical application, to thereby enable others skilled in the art to best utilize the present invention and various embodiments, with various modifications, as are suited to the particular use contemplated. It is intended that the scope of the invention be defined by the Claims appended hereto and their equivalents.

CLAIMS

WHAT IS CLAIMED IS:

1. A wireless communication and control system including a wireless device comprising:

central server means for storing communication protocols and control protocols;

means for communicating the communication protocols and selectively communicating the control protocols between the wireless device and the central server means;

communication protocol means for configuring the system for communication;

first control protocol means for configuring the system as one of a selection of intelligent appliance controllers; and

second control protocol means for alternately configuring the system as one of a selection of Internet terminals.

2. The system of claim 1 wherein the wireless device comprises a hand-held computing device.

3. The system of claim 2 wherein the hand-held computing device is a wireless telephone.

4. The system of claim 2 wherein the hand-held computing device is a cellular phone.

5. A wireless communication and control system including a wireless device comprising:

central server means for storing communication protocols and control protocols;

transmission means for selectively communicating the communication protocols and the control protocols between the wireless device and the central server means;

communication protocol means for configuring the system for one of a selection of communication modes; and

control protocol means for configuring the system as one of a selection of intelligent appliance controllers and Internet terminals.

6. The system of claim 5 wherein the wireless device comprises a hand-held computing device.

7. The system of claim 6 wherein the hand-held computing device is a wireless telephone.

8. The system of claim 6 wherein the hand-held computing device is a cellular phone.

Ex.1002
APPLE INC. / Page 45 of 610

ABSTRACT OF THE DISCLOSURE

A wireless communication and control system including a wireless device. There is a central server for storing communication protocols and control protocols and communicating the communication protocols and selectively communicating the control protocols between the wireless device and the central server. A communication protocol configures the system for communication and control protocols configure the system as one of a selection of intelligent appliance controllers. Alternately the control protocols configure the system as one of a selection of Internet terminals. The wireless device is any hand-held communication device, such as a hand-held computing device, wireless telephone, or cellular phone.

Ex.1002
APPLE INC. / Page 46 of 610

OIPE JC75
OCT 13 2004
PATENT & TRADEMARK OFFICE

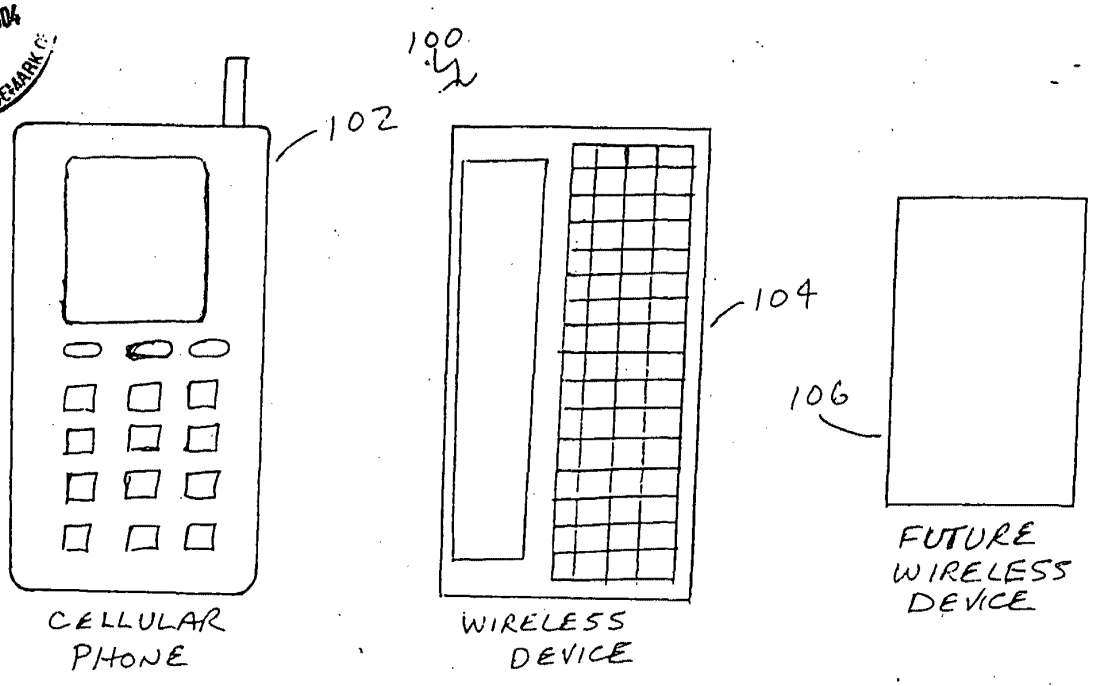

FIG. 1

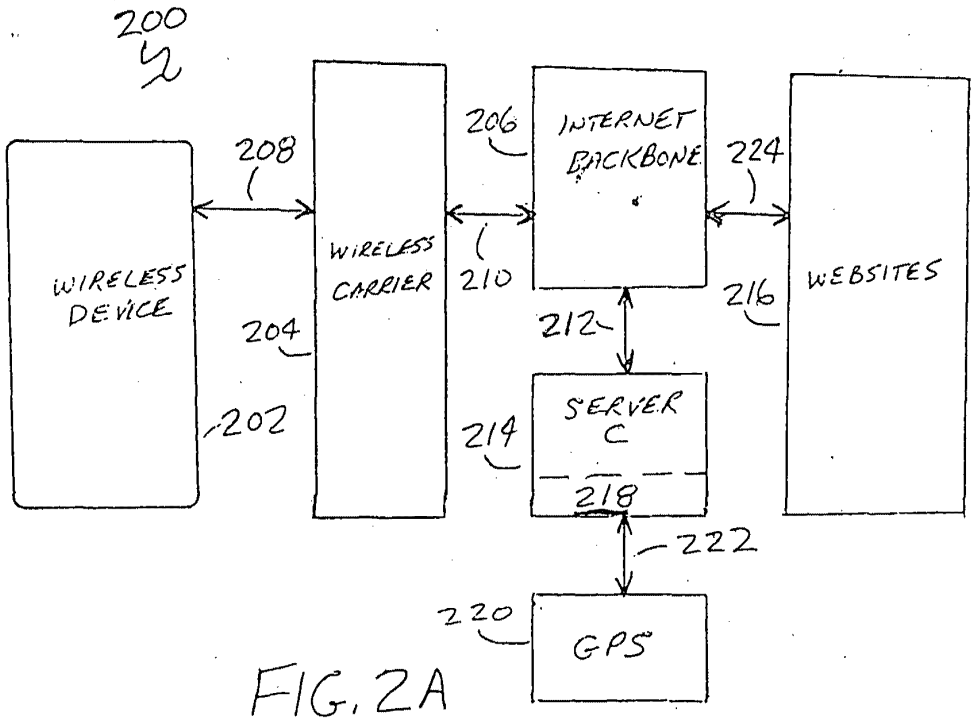

FIG. 2A

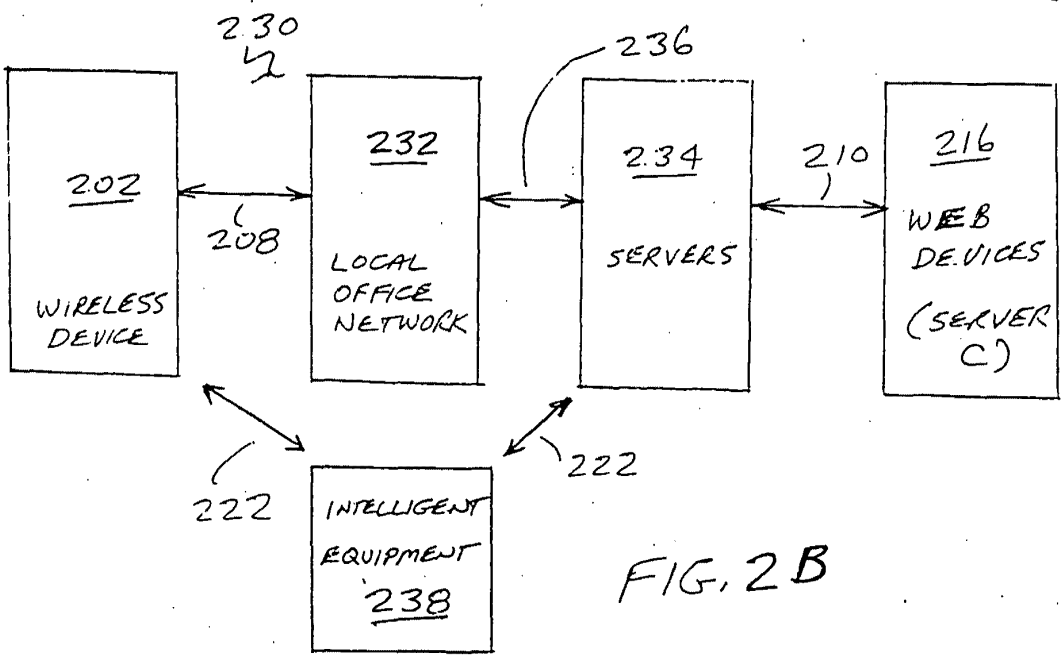
230
236
202
WIRELESS DEVICE
208
232
LOCAL OFFICE NETWORK
234
SERVERS
210
216
WEB DEVICES (SERVER C)
222
222
INTELLIGENT EQUIPMENT 238

FIG. 2B

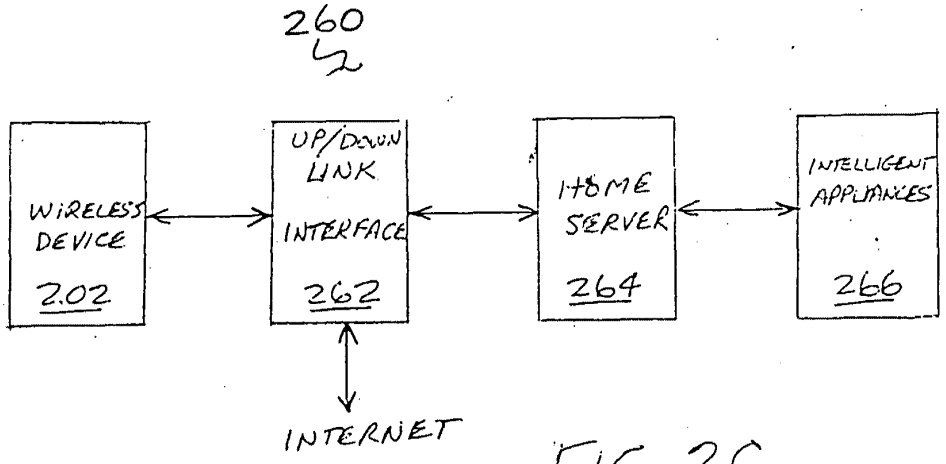
260
WIRELESS DEVICE 202
UP/DOWN LINK INTERFACE 262
HOME SERVER 264
INTELLIGENT APPLIANCES 266
INTERNET

FIG. 2C

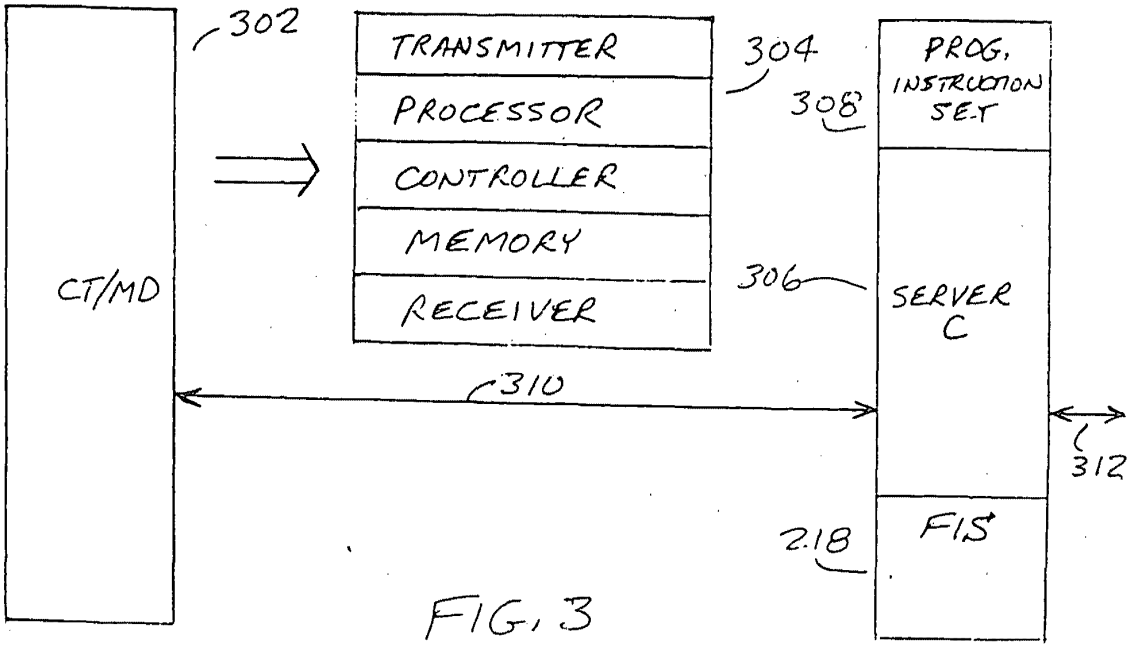

FIG. 3

400

CURRENT MODE – PRIORITY 402

PRIMARY	SECONDARY	TERTIARY
PUBLIC CARRIER LOOP	HOME LOOP	LOCAL OFFICE LOOP
FREQUENCY FP	FREQUENCY FH	FREQUENCY FL

REQUESTED MODE – PRIORITY 404

PRIMARY	SECONDARY	TERTIARY
LOCAL OFFICE LOOP	PUBLIC CARRIER	HOME LOOP
FL	FP	FH

FIG. 4

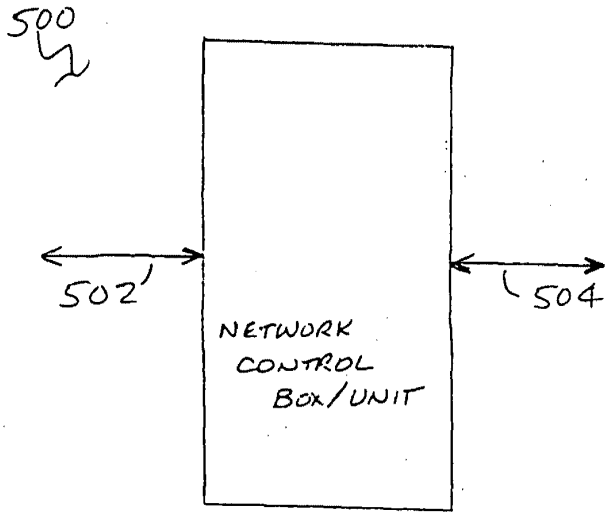

FIG. 5

600

TRANSMITTER	PROCESSOR	CONTROLLER	MEMORY	RECEIVER
608	602	606	604	610

FIG. 6

700

702

FREQUENCY SOURCE	PARAMETER
CHANNEL 1	f1, P1, BW1 ---
CHANNEL 2	f2, P2, BW2 ---
CHANNEL N	fN, PN, BWN ---

704

FREQUENCY SOURCE	PARAMETER
CHANNEL 1	f3, P3, BW3 ---
CHANNEL 2	f4, P4, BW4 ---
CHANNEL N	fM, PM, BWM ---

FIG. 7

UNITED STATES PATENT AND TRADEMARK OFFICE

Commissioner for Patents
United States Patent and Trademark Office
P.O. Box 1450
Alexandria, VA 22313-1450
www.uspto.gov

Raman Rao
3099 Alexis Drive
Palo Alto, CA 94304

COPY MAILED

FEB 15 2005

OFFICE OF PETITIONS

In re Application of
Rao et al.
Application No. 10/911,211
Filed: October 13, 2004
For: Dynamically Configurable Wireless Devices

Decision on Petition

This is a decision in response to the paper filed October 13, 2004, which is being treated as a petition to accord the above-identified application a filing date of August 3, 2004.

The petition is **dismissed**.

Any request for reconsideration must be submitted within TWO (2) MONTHS from the mail date of this decision. No further petition fee is required for the request. Extensions of time under 37 CFR 1.136(a) are NOT permitted.

The merits of the petition can not be considered until the petition fee ($400) has been paid.

Normally, the decision could end at this point since the petition fee has not been paid. However, *as a courtesy*, further information will be given to petitioner.

Petitioner may wish to investigate the extent to which petitioner will be harmed, if harmed at all, if the application retains a filing date of October 13, 2004, rather than August 3, 2004,. The Office wishes to ensure petitioner does not spend an additional non-refundable $400 filing a new petition unless the risk and reward justify such a significant expense on the part of petitioner.

The costs of filing a renewed petition seeking a filing date of August 3, 2004

If a petition requesting an earlier filing date is filed and granted, petitioner will need to pay a total of $465. The total includes $400 for the petition and a surcharge based on the date the filing fee was submitted. A surcharge ($65 for a small entity) is necessary whenever the filing fee is paid on a date after the filing date. At the present time the filing fee is being paid on October 13, 2004, the same date as the filing date. However, the filing fee payment date would not be the same date as the filing date if the filing date were changed to August 3, 2004.

Petitioner should recognize that a renewed petition may not be granted. The transmittal page does contain an incorporation by reference statement. However, the page also states, with emphasis in the original, "The incorporation can only be relied upon when a portion has been inadvertently omitted from the submitted application parts." On August 3, 2004, petitioner submitted a page which states in part, "The original specification and drawings are not included." The issue will not be addressed further since a petition along with payment of the required fee has not been filed. Petitioner is reminded the $400 is non-refundable.

Applicant appears to desire to claim the benefit of an earlier filing date based on prior applications.

The transmittal sheet indicates the application is a divisional of application no. 09/591,381. On October 13, 2004, a specification was filed. The first sentence of the specification claims priority

based on two applications - 09/281,739 and 08/764,903. Specifically, the specification states the application is a continuation-in-part of application no. 09/281,739 which is a continuation-in-part of application no. 08/764,903.

Petitioner may wish determine if a filing date of October 13, 2004, rather than August 3, 2004, harms petitioner if both dates allow the instant application to claim benefit of an earlier filing date based on prior applications.

A proper claim for priority based on prior applications has not been filed.

In order for a non-provisional filed after November 29, 2000, one may not obtain the benefit of an another application's filing date unless a proper and timely claim has been made.

In order for the claim for priority to be proper, the claim must be made either in the first sentence of the specification or in an Application Data Sheet ("ADS"). A claim for priority based on application no. 09/591,381 appears neither in the specification or an ADS. The specification claims priority based on application no. 09/281,739. However, application no. 09/281,739 issued on January 2, 2001. In order to claim priority directly to application no. 09/281,739, the application would need a filing date prior to the date of issuance of a patent for application no. 09/281,739. A patent for application no. 09/281,739 issued on January 2, 2001.

Petitioner can amend the first sentence of the specification, but such an amendment will require the submission of a petition under 37 CFR 1.78.

A petition under 37 CFR 1.78 is necessary to amend the first sentence to include application no. 09/591,381 as part of the chain of applications because such an amendment was not filed by February 13, 2005. When an application is filed on or after November 29, 2000, benefit claims under 35 U.S.C. 119(e), 120, 121 and 365(c) must be made during the pendency of the application and within the later of four months from the actual filing date of the application or sixteen months from the filing date of the prior application. For the instant application, the above period of time ended on February 13, 2005. The priority claim at issue were not made by this date.

37 CFR 1.78(a)(3) states,

> If the reference required by 35 U.S.C. 120 and paragraph (a)(2) of this section is presented . . . after the time period provided by paragraph (a)(2)(ii) of this section, the claim . . . may be accepted if the reference identifying the prior-filed application . . . was unintentionally delayed. A petition to accept an unintentionally delayed claim under 35 U.S.C. 120, 121, or 365(c) for the benefit of a prior-filed application must be accompanied by:
>
> (i) The reference required by 35 U.S.C. 120 . . . unless previously submitted;
> (ii) The surcharge set forth in § 1.17(t); and
> (iii) A statement that the entire delay between the date the claim was due under paragraph (a)(2)(ii) of this section and the date the claim was filed was unintentional.

The fee required to be paid is the surcharge set forth in 37 CFR 1.17(t) which is $1,370.

Petitioner might want to consider the effect filing a new application would have on applicants' rights.

Petitioner might want to ask what harm might occur if a brand new application was filed, along with the filing fee of $150, search fee of $250, examination fee of $100, and with any other necessary fees. In filing a new application, petitioner could ensure the first sentence contained a

proper claim for priority and thereby ensure a petition under 37 CFR 1.78(a)(3) would not be necessary.

Summary:

Since the petition fee has not been paid, the full merits of the petition will not be considered and the petition is dismissed.

The Office of Initial Patent Examination will further process the application with a filing date of October 13, 2004, using the papers filed on August 3, 2004, and the papers filed on October 13, 2004.

Telephone inquiries should be directed to Petitions Attorney Steven Brantley at (571) 272-3203.

Charles Steven Brantley
Senior Petitions Attorney
Office of Petitions

RECEIVED
CENTRAL FAX CENTER
APR 0 6 2005

URGENT URGENT

NOTICE OF USPTO ERROR IN CLAIM FEE CALCULATION AND POTENTIAL EXAMINATION OF INCORRECT CLAIMS.

REQUEST FOR EXAMINATION OF THE CORRECT DIVISIONAL CLAIMS

4/06/05

Mail Stop Missing Parts
Commissioner for Patents
P.O. BOX 1450
ALEXANDRIA, VA 22313-1450

Reference: Application Number: 10/911,211 Filed: 08/03/2004
REQUEST FOR EXAMINATION OF THE CORRECT DIVISIONAL CLAIMS

Dear Sir,
The applicant filed a divisional application on 8/03/2004 with a concurrent submittal of a divisional Preliminary Amendment A wherein new claims 13-35 were included for the purpose of examination as part of the divisional application.

The missing parts notification dated 3/10/2005, notes a fee receipt of $466 and further states that the total claims are 8 and independent claims are 2. This can not be correct as the claims that the applicant requested examination are 13-35, which is a total of 23 claims. The applicant believes that the calculation is in error and is based on the original parent application as submitted in year 2000. Additionally, re examination of these original claims is not the intended purpose of the current divisional application.

Specifically in the current divisional application:
The independent Claims are 13, 14, 29 and 33 for a total of 4 independent claims need to be examined as part of the divisional application. The dependent claims are 15, 16, 17, 18, 19, 20, 21, 22, 23, 24, 25, 26, 27, 28, 30, 31, 32, 34, and 35; for a total of 19 dependent claims.

The very purpose of a divisional application filing is for the purpose of examination of the new claims that were restricted by the examiner in the original filing. Please provide a new input as to the fees that are due from the applicant. The applicant further respectfully requests that the error be corrected and the correct and intended claims be submitted for examination as part of the current divisional application.

Regards,
Raman K. Rao, Applicant
3099 Alexis Drive, Palo Alto, CA 94304. Tel: 650 941 7096, Fax: 650 618 155

Enclosed is a copy of the Preliminary Amendment as submitted to you on 8/03/2004

PAGE 1/17 * RCVD AT 4/6/2005 10:04:39 PM [Eastern Daylight Time] * SVR:USPTO-EFXRF-1/3 * DNIS:8729306 * CSID: * DURATION (mm-ss):07-14

Title

Dynamically configurable IP based wireless device and wireless networks

Preliminary Class

455

LICENSE FOR FOREIGN FILING UNDER
Title 35, United States Code, Section 184
Title 37, Code of Federal Regulations, 5.11 & 5.15

GRANTED

The applicant has been granted a license under 35 U.S.C. 184, if the phrase "IF REQUIRED, FOREIGN FILING LICENSE GRANTED" followed by a date appears on this form. Such licenses are issued in all applications where the conditions for issuance of a license have been met, regardless of whether or not a license may be required as set forth in 37 CFR 5.15. The scope and limitations of this license are set forth in 37 CFR 5.15(a) unless an earlier license has been issued under 37 CFR 5.15(b). The license is subject to revocation upon written notification. The date indicated is the effective date of the license, unless an earlier license of similar scope has been granted under 37 CFR 5.13 or 5.14.

This license is to be retained by the licensee and may be used at any time on or after the effective date thereof unless it is revoked. This license is automatically transferred to any related applications(s) filed under 37 CFR 1.53(d). This license is not retroactive.

The grant of a license does not in any way lessen the responsibility of a licensee for the security of the subject matter as imposed by any Government contract or the provisions of existing laws relating to espionage and the national security or the export of technical data. Licensees should apprise themselves of current regulations especially with respect to certain countries, of other agencies, particularly the Office of Defense Trade Controls, Department of State (with respect to Arms, Munitions and Implements of War (22 CFR 121-128)); the Office of Export Administration, Department of Commerce (15 CFR 370.10 (j)); the Office of Foreign Assets Control, Department of Treasury (31 CFR Parts 500+) and the Department of Energy.

NOT GRANTED

No license under 35 U.S.C. 184 has been granted at this time, if the phrase "IF REQUIRED, FOREIGN FILING LICENSE GRANTED" DOES NOT appear on this form. Applicant may still petition for a license under 37 CFR 5.12, if a license is desired before the expiration of 6 months from the filing date of the application. If 6 months has lapsed from the filing date of this application and the licensee has not received any indication of a secrecy order under 35 U.S.C. 181, the licensee may foreign file the application pursuant to 37 CFR 5.15(b).

RECEIVED
CENTRAL FAX CENTER
APR 0 6 2005

UNITED STATES PATENT AND TRADEMARK OFFICE

UNITED STATES DEPARTMENT OF COMMERCE
United States Patent and Trademark Office
Address: COMMISSIONER FOR PATENTS
P.O. Box 1450
Alexandria, Virginia 22313-1450
www.uspto.gov

APPL NO.	FILING OR 371 (c) DATE	ART UNIT	FIL FEE REC'D	ATTY.DOCKET NO	DRAWINGS	TOT CLMS	IND CLMS
10/911,211	10/13/2004	2681	466	31	5	8	2

CONFIRMATION NO. 7409

Raman Rao
3099 Alexis Drive
Palo Alto, CA 94304

FILING RECEIPT

OC000000015405044

Date Mailed: 03/10/2005

Receipt is acknowledged of this regular Patent Application. It will be considered in its order and you will be notified as to the results of the examination. Be sure to provide the U.S. APPLICATION NUMBER, FILING DATE, NAME OF APPLICANT, and TITLE OF INVENTION when inquiring about this application. Fees transmitted by check or draft are subject to collection. Please verify the accuracy of the data presented on this receipt. **If an error is noted on this Filing Receipt, please write to the Office of Initial Patent Examination's Filing Receipt Corrections, facsimile number 703-746-9195. Please provide a copy of this Filing Receipt with the changes noted thereon. If you received a "Notice to File Missing Parts" for this application, please submit any corrections to this Filing Receipt with your reply to the Notice. When the USPTO processes the reply to the Notice, the USPTO will generate another Filing Receipt incorporating the requested corrections (if appropriate).**

Applicant(s)

Raman K. Rao, Palo Alto, CA;
Sunil K. Rao, Palo Alto, CA;
Sanjay K. Rao, Palo Alto, CA;

Power of Attorney: None

Domestic Priority data as claimed by applicant

This application is a DIV of 09/591,381 06/09/2000

Foreign Applications

If Required, Foreign Filing License Granted: 03/09/2005

The country code and number of your priority application, to be used for filing abroad under the Paris Convention, is US10/911,211

Projected Publication Date: Request for Non-Publication Acknowledged

Non-Publication Request: Yes

Early Publication Request: No

** SMALL ENTITY **

RECEIVED
CENTRAL FAX CENTER
APR 0 6 2005

I hereby certify that this correspondence is being deposited with the United States Postal Service as First Class Mail in an envelope addressed to: Commissioner for Patents, Arlington, VA 22313 on 8/03/2004
Signed: _____ Date: 8/03/2004
Raman K. Rao, Applicant

IN THE UNITED STATES PATENT AND TRADEMARK OFFICE

RELATED REFERENCES TO CURENT DIVISIONAL APPLICATION

Inventor(s)	: RAO	
Serial No.	: 09/591,381	Group Art Unit: 2171
Filed	06/09/2000	Examiner: Mehrpour
For:	DYNAMICALLY CONFIGURABLE WIRELESS DEVICES	

PRELIMINARY AMENDMENT A

Commissioner for Patents
PO BOX 1450
Washington, D. C. 20231

Sir:

This Preliminary Amendment A is submitted concurrently with this divisional application for examination of claims that were restricted in the application 09/591,381 filed on 06/09/2000 which is currently still under examination. The examination of the claims numbered 13-35 is requested.

CLAIMS:

13. In a mobile communication system, a method for dynamically configuring a mobile communication device for one or more selected functions comprising:

utilizing a mobile device configured with input, output and or display capabilities for communication of voice and data,

utilizing a central server,

communicating between a mobile device and a central server by wired or wireless means utilizing one or more communication methods and communication protocols,

configuring the mobile device for a selected first set of functions including communication, computation, command, sense and control for a selected first utility to the mobile device user;

establishing one or more functional instructions for dynamic reconfiguration of the mobile device from a first set of functions to a second set of functions;

storing functional instructions for executing said dynamic reconfiguration of the mobile device from a first set of functions to a second set of functions within the mobile device, the central server including a combination of the mobile device and the central server; further including

storing said functional instruction sets in databases and lookup tables within the mobile device and or the central server for ease and efficiency of execution from a first set of functions to one or more selected second set of functions of the mobile device;

selecting a functional instruction set for a selected reconfiguration of the mobile device from a first set of functions to a selected second set of functions in a standalone manner utilizing the mobile device and or in conjunction with utilizing the central server;

accessing one or more said selected partial or full functional instructions or a set of functional instructions from storage, databases and lookup tables contained within the mobile device itself and/or accessing said selected partial or full functional instructions or a set of functional instructions from storage, databases and lookup tables contained within a central server by wired or wireless communication means;

executing the dynamic reconfiguration of the mobile device from use with a first set of functions to for use with a second set of functions utilizing the processing, storage and database capabilities of the mobile device in a standalone manner and or in conjunction with the processing, storage and database capabilities of a central server, a local server, a network server or a combination thereof;

reconfiguring the mobile device for the selected first set of functions, second set of functions and one or more other set of functions, to provide one or more selected second utility(s) to the mobile device user dynamically in real time or at the selected time.

14. A dynamically reconfigurable mobile communication system, including a mobile communication device for performing selected functions comprising:

a mobile device configured with input, output and or display capabilities for communication of voice and data,

a central server,

means for communication between a mobile device and a central server by wired or wireless means,

means for configuring the mobile device for a selected first set of functions including communication, computation, command, sense and control for a selected first utility to the mobile device user;

means for establishing one or more functional instructions for dynamic reconfiguration of the mobile device from a first set of functions to a second set of functions;

means for storing functional instructions for executing said dynamic reconfiguration of the mobile device from a first set of functions to a second set of functions within the mobile device, the central server including a combination of the mobile device and the central server; including

means for storing said functional instruction sets in databases and lookup tables within the mobile device and or the central server for ease and efficiency of execution from a first set of functions to one or more selected second set of functions of the mobile device;

means for selecting a functional instruction set for a selected reconfiguration of the mobile device from a first set of functions to a selected second set of functions in a standalone manner utilizing the mobile device and or in conjunction with utilizing the central server;

means for accessing one or more said selected partial or full functional instructions or a set of functional instructions from storage, databases and lookup tables contained within the mobile device itself and/or accessing said selected partial or full functional instructions or a set of functional instructions from storage, databases and lookup tables contained within a central server by wired or wireless communication means;

means for executing the dynamic reconfiguration of the mobile device from use with a first set of functions to for use with a second set of functions utilizing the processing, storage and database capabilities of the mobile device in a standalone manner and or in conjunction with the processing, storage and database capabilities of a central server, a local server, a network server or a combination thereof; including

means for reconfiguring the mobile device for the selected first set of functions and or a first set of utility, second set of functions and or a second utility and one or more other set of functions and utility(s), to provide one or more desirable functions and utility(s) to the mobile device user dynamically in real time or at the selected time.

15. A mobile communication system of claim 14 comprising

means for storing a plurality of mobile device functionality instructions on the mobile device and or the local, central and or network server;

means for modifying and generating a plurality of new mobile device functionality instructions by means of the mobile device and or the servers;

means for independently configuring the mobile device functionality in a stand alone manner and or in conjunction with a local, central or network server;

means for using the mobile device functionality instructions in the selected manner and at the selected time.

16. A mobile device communication system of claim 14 comprising

means for dynamically configuring the full or partial functionality of the mobile device by software means without altering the hardware configuration,

means for the functional instruction software to be resident on the mobile device and or on a local, central and or network server,

means for using the functional instruction software resident on the mobile device in a stand alone manner and or in conjunction with the functional instruction software resident on the local, central and or network server,

means for utilizing a plurality of mobile device functionalities with the existing hardware configuration.

17. A mobile communication system of claim 14 comprising

means for enabling one or more specific dynamic mode configurations of the mobile device for desired utility such as a cell phone, a PDA, a remote controller, an IP phone, a music player, a voice recorder, a camera and other devices with specific utility or a combination of utilities to the user;

means for enabling and associating one or more user profiles with the selected mode configuration from one function to another function;

means for storing a plurality of mode configurations, user profiles, functional instructions, program instructions and other enabling tools on the mobile device itself and or the local, central and or network server;

means for dynamically reconfiguring and utilizing the desired mode configuration and or the desired user profile by means of the functional instructions and program instructions in conjunction with the processing power, storage, databases and lookup tables of the mobile device by itself and or in conjunction with the processing power, storage, databases and lookup tables of the local, central and or network server;

means for utilizing the existing mobile device hardware for a specific function or a combination of functions for a desired utility to the mobile device user dynamically or at the selected time in conjunction with the software and functional instructions resident within the mobile device, a central server, a local server, a network server or a combination thereof.

18. A mobile communication system of claim 14 comprising

means for configuration of the mobile device for communication utilizing one or more communication methods and or communication protocols such as Bluetooth, Wi-Fi, IP, 802.XX, cellular, and other methods

means for selecting a first communication method and or a first communication protocol,

means for communication with a first communication method and or a first communication protocol;

means for selecting a second communication method and or a second communication protocol;

means for communication with a second communication method and or a second communication protocol; including

means for switching from a first communication method and or a first communication protocol to a second communication method and or a second communication protocol dynamically or at the selected time;

means for executing communication, computation, command, control and other functions for a selected utility to the mobile device user utilizing one or more communication methods and or communication protocols in a standalone manner leveraging the processing, storage, database and lookup tables maintained within the mobile device itself and or in conjunction with a central server, a local server, a network server or a combination thereof.

19. A mobile communication system of claim 18 comprising

means for dynamically sensing a communication method and or a communication protocol,

means for switching from a first communication method and or a first communication protocol to said sensed second communication method and or a second communication protocol dynamically or at the selected time;

means for executing communication, computation, command, control and other functions seamlessly for a selected utility to the mobile device user utilizing one or more communication methods and or communication protocols in a standalone manner leveraging the processing, storage, database and lookup tables maintained within the mobile device itself and or in conjunction with a central server, a local server, a network server or a combination thereof.

20. A mobile device communication system of 14 comprising

a mobile device configured with one or more input and output channels of communication,

a central server,
means for wired or wireless communication between a mobile device and a central server,

means for selecting and configuring one or more input and output channels of a mobile device for a selected communication and utility,

means for voice communication on a selected first channel of a mobile device,

means for data, audio, video or other communications on selected same or different channel of a mobile device,

means for sequential or simultaneous communication on a selected communication channel by multiplexing the same channel or utilizing alternate channels;

means for a plurality of communication methods, communication types and functions on a selected channel;

means for utilizing one or more input and output channels of a mobile device for a selected function and or utility in conjunction with the capabilities of the mobile device by itself and or in conjunction with the capabilities of a central server, a local server, a network server or a combination thereof.

21. A mobile device communication system of claim 20 further comprising

means for enabling the mobile device for voice and data communication on one or more selected input and output channels ;

means for enabling the mobile device for communication of audio, video, data, broadcast and or other communication on one or more input and output channels,

means for enabling dynamic reconfiguration by means of functional instructions, program instructions and or other means wherein the instructions are resident on the mobile device and or the servers,

means for dynamically or at a desired time selecting the desired communication parameters such as the frequency, power and communication protocols for reconfiguring one or more input and output channels; including

means for dynamically or at a desired time altering and modifying the full or partial functionality of the mobile device in a stand alone manner using the processing power, storage and data bases of the mobile device in a stand alone manner and or in conjunction with the processing power, storage and data bases of the local, central and or network servers; including

PAGE 9/17 * RCVD AT 4/6/2005 10:04:39 PM [Eastern Daylight Time] * SVR:USPTO-EFXRF-1/3 * DNIS:8729306 * CSID: * DURATION (mm-ss):07-14

means for altering and modifying the functionality of the desired input and output channels of the mobile device; including

means for multiplexing one or more of the input and one or more of the output channels for the desired communication, computation, command and control functions; further including

means for dynamically and or at the desired time configuring the mobile device for a plurality of interfaces for one or more types of input, output and display.

22. A mobile device communication system of claim 20 comprising

means for dynamic signaling and sensing of the communication environment, the communication methods, communication parameters and or the functional instructions, by radio frequency signaling and or other methods;

means for enabling disparate communication methods by dynamically adjusting communication parameters such as the frequency of transmission/receiving, power levels and other parameters which are best suited to a specific environment by functional instructions or other means,

means for dynamic switching of the communication parameters for transition from one communication environment and or communication method to another;

means for enabling a single mobile device to perform a plurality of same or disparate functions on one or more channels;

means for a mobile device to transform itself dynamically to execute a multiplicity of desired functions, on one or more input and output channels, by utilizing the processing power and software resident in the mobile device itself and or in conjunction with the processing power and software resident on the servers.

23. A mobile device communication system of claim 20 comprising

means for dynamically and independently tuning one or more input and output channels of the mobile device,

means for dynamically and independently tuning the input and output channels based on various parameters such as power, frequency, signal to noise ratio, desired and allowable error rates for data transfer and other factors;

means for dynamically optimizing the performance of the mobile device for efficient operation in the desired environment.

PAGE 10/17 * RCVD AT 4/6/2005 10:04:39 PM [Eastern Daylight Time] * SVR:USPTO-EFXRF-1/3 * DNIS:8729306 * CSID: * DURATION (mm-ss):07-14

24. A mobile device communication system of claim 20 comprising

means for the mobile device to bypass the public carrier operating frequencies for voice and or data communication on one or more input and output channels;

means for communication of voice and data using the desired home, office, factory, transportation system or other operating frequencies using the desired input and output channels of the mobile device; and or

means for contemporaneous operation on public carrier and or private carrier frequencies on the selected input and output channels of the mobile device.

25. A mobile device communication system of claim 20 comprising

a Global Positioning Server,

means of wired or wireless communication with the GPS server,

means for determining the geographical location of the mobile device,

means for sensing the macro and micro communication environments in a selected environment and location wherein the mobile device is present,

means for dynamically selecting the desired communication methods and communication parameters on one or more input and output channels of the mobile device,

means for enabling the desired communication on one or more input and output channels of the mobile device.

26. A mobile device communication system of claim 20 comprising

means for the mobile device to be enabled with a sleep mode and or watch dog mode on one or more input and output channels,

means for instantaneously switching from a sleep mode and or watch dog mode to an active mode on one or more desired input and output channels of the mobile device,

means for sensing the communication environment by the mobile device,

means for the mobile device to sense other mobile devices,

means for the mobile device to sense using a plurality of communication methods inclusive of radio frequency and or other means,

means for the mobile device to sense one or more servers,

means for the mobile device to execute the desired communication and desired functions at the desired time and in the desired sequence.

27. A mobile device communication system of claim 20 comprising

means for the mobile device to operate in a wireless manner on one or more input and output channels,

means for the same mobile device to operate in a wired manner on one or more input and output channels

means for the selection and enabling of the desired input and output channels of the mobile device for wired or wireless communication.

28. A mobile device communication system of claim 20 comprising

means for enabling a selection of a plurality of communication modes on one or more input and output channels of the mobile device,

means for selecting and enabling a primary communication mode on one or more input and output channels of the mobile device,

means for selecting and enabling a secondary communication mode on one or more input and output channels of the mobile device,

means for enabling a hierarchy of communication modes on a mobile device for communication at a desired time and in desired order on one or more input and output channels,

means for instantaneously, dynamically or in a delayed manner enabling the desired communication mode on the desired input and output channel of the mobile device.

29. A mobile device communication system comprising

a mobile device,

local, central and or network servers,

means for wired or wireless communication using public carrier communication loops, private carrier communication loops, office/factory communication loops and home communication loops, said loops operating with same or disparate communication methods and or communication parameters for wired or wireless communication in a selected environment;

means for the mobile device to instantaneously recognize the communication environment and determine the nature of the public, private, office, factory, transportation or home carrier communication methods and communication parameters,

means for selecting instantaneously and or at a desired time and switching the carrier(s) for desired communication on a desired input and output communication channel of the mobile device;

means for operation with one single mobile device in multiple carrier environments on one or more input and output channels of the mobile device;

means for operation by the mobile device in a standalone manner and or in conjunction with a local, central and or network server.

30. A mobile device communication system of claim 29 comprising

means for voice, data and video communication on one or more channels of the mobile device,

means for maintaining a plurality of functional instructions on the mobile device and or the network servers,

means for enabling the mobile device to be configured for wired or wireless remote command and control applications such as TV, entertainment, gaming, appliance control, intelligent appliance control, intelligent sensing and control, intelligent equipment control and other control applications for the home, office, transportation systems, factory and other applications;

means for a plurality of same or different control applications being enabled sequentially or contemporaneously on one or more input and output channels of the mobile device;

means for enabling the control applications using the processing power, storage and databases of the mobile device by itself and or in conjunction with the processing power, storage and databases of the local, central and or network server.

31. A mobile device communication system of claim 29 comprising

means for voice, data and video communication on one or more channels of the mobile device,

means for maintaining a plurality of functional instructions on the mobile device and or the network servers,

means for dynamically configuring the mobile device with a plurality of functional instructions on one or more channels;

means for enabling the emulation of the mobile device for one or more same or disparate functions;

means for enabling the mobile device to emulate and perform the functions of a cordless telephone, a cellular telephone, a PDA, an Internet Protocol based IP telephone and other disparate computation, communication, command and control device functions on one or more input and output channels of the mobile device;

means for the communication, command, control and computation functions to be emulated and enabled by using the processing power/storage and databases of the mobile device by itself and or in conjunction with the processing power, storage and databases of the local, central and or network server.

32. A mobile device communication system of claim 29 comprising

means for the mobile device to be dynamically assigned a plurality of identification numbers,

means for the identification means to include a plurality of identification methods such as telephone numbers, static IP address number, dynamic IP address number and other numbers;

means for the mobile device to be dynamically configured for voice and data communication,

means for using one or more of the telephone numbers and other identification numbers sequentially or contemporaneously on the same mobile device for desired communication,

means for recognizing and relating the incoming and outgoing communications with the telephone number means and or other identification number means by visual, audible and other input, output, display and interface methods;

means for communication on one or more input and output channels of the mobile device with same or disparate identification numbers and or communication methods; and or

means for dynamically configuring the mobile device for communication and operation using the Internet Protocol, IP, based communication methods and or non IP based communication methods, on one or more input and output channels of the mobile device, for sequential or contemporaneous use

means for dynamically switching between the IP mode and non IP mode for communication on one or more input and output channels of the mobile device by software means, functional instructions or other methods,

means for dynamically enabling the communications of voice, audio, video and data in the IP mode and or non IP mode on the mobile device by utilizing software means, functional instructions means and or other methods with or without altering the hardware configuration of the mobile device

means for enabling the operation in the IP mode and or non IP mode by using the processing power, storage and databases of the mobile device in a standalone manner and or in conjunction with the processing power, storage and databases of the local, central and or network server.

33. A mobile device communication system comprising

a mobile device,

a central server,

a network control box having one or more input and output channels located with an office, home, factory, office buildings or other locations,

means for wired or wireless communication by the network control box on one or more channels using one or more communication methods and associated communication parameters;

means for selection and operation of the channels of the network box at one or more transmit and receive frequencies, power levels, signal to noise ratios and bandwidths;

means for interfacing between the mobile device and the network control box by using wired or wireless communication methods in a bilateral manner and or in conjunction the local, central and or network server; including

means for the network control box to operate at one or more public carrier, private carrier, office loop, home loop and other communication frequencies and modes;

means for the mobile device to operate in conjunction with the network box by selecting the desired communication mode and the communication loop appropriate for the intended communication on the selected input and or output channels of the mobile device and or the selected input/output channels of the network control box;

means for managing the operation of the network control box by functional instructions resident within the network control box and or derived from the mobile device acting by itself and or in conjunction with functional instructions resident on a central server, a local or network server;

means for the network control box input and output channels to be dynamically configured for communication in same or different communication modes,

means for configuring the network control box for desired utility by the mobile device acting in a stand alone manner and or in conjunction with the local, central and or network server.

34. A mobile device communication system of claim 33 comprising

means for the network control box to dynamically sense a mobile device operating within range of the network control box;

means for the mobile device to dynamically sense a network control box operating within range of the mobile device;

means for the mobile device and the network control box to recognize, authenticate and enable communication with each other;

means for dynamic switching from a first set of communication methods and communication protocols to a second set of communication methods and communication protocols that are acceptable for the mobile device user and the network control box;

means for seamless and dynamic operation of the mobile device in a plurality of environments and locations for a selected utility to the mobile device user utilizing the capabilities of the mobile device and a network control box or utilizing the capabilities of the mobile device, the network control box, a central server, a local server, a network server or a combination thereof.

PAGE 15/17 * RCVD AT 4/6/2005 10:04:39 PM [Eastern Daylight Time] * SVR:USPTO-EFXRF-1/3 * DNIS:8729306 * CSID: * DURATION (mm-ss):07-14

35. A mobile device communication system of claim 34 comprising

a plurality of mobile devices,

means for a first mobile device to communicate with the network control box utilizing a first communication method and or a first communication protocols;

means for a second mobile device to communicate with the network control box utilizing a second communication method and or a second communication protocols;

means for the network control box to seamlessly enable communication between the first mobile device and the second mobile device utilizing same or disparate communication methods and or communication protocols;

means for switching and or translation including communication method translations and or protocol translations from a first communication method/protocol to a second communication method/protocol within the network control box itself and or performing said functions in conjunction with a central server, a local server, a network server or a combination thereof wherein said switching and translation instructions and algorithms reside within the network control box and or one or more servers;

means for dynamic and seamless communication between a plurality of communication devices utilizing same or disparate communication methods and or communication protocols utilizing the capabilities of the mobile devices by themselves in conjunction with each other, in conjunction with the network control box and or in conjunction with a central server, a local server, a network server or a combination thereof.

PAGE 16/17 * RCVD AT 4/6/2005 10:04:39 PM [Eastern Daylight Time] * SVR:USPTO-EFXRF-1/3 * DNIS:8729306 * CSID: * DURATION (mm-ss):07-14

REMARKS

The attached claims are central to the original specification and the drawings therein filed on as application number 09/591, 389 filed on 06/09/2000. The applicant respectfully submits that Levac even if combined with Houde does not teach the features, claimed by Rao et al. Examination of these claims is respectfully requested.

Respectfully submitted,

By
Raman K. Rao, Applicant

Raman K. Rao
3099 Alexis Drive,
Palo Alto, CA 94304-1304
Telephone: (650) 941-7096
Fax: (650_ 618-1553

RFW

UNITED STATES PATENT AND TRADEMARK OFFICE

UNITED STATES DEPARTMENT OF COMMERCE
United States Patent and Trademark Office
Address: COMMISSIONER FOR PATENTS
P.O. Box 1450
Alexandria, Virginia 22313-1450
www.uspto.gov

APPL NO.	FILING OR 371 (c) DATE	ART UNIT	FIL FEE REC'D	ATTY.DOCKET NO	DRAWINGS	TOT CLMS	IND CLMS
10/911,211	10/13/2004	2681	466	31	5	8	2

CONFIRMATION NO. 7409

Raman Rao
3099 Alexis Drive
Palo Alto, CA 94304

OIPE JC79
APR 08 2005
PATENT & TRADEMARK OFFICE

FILING RECEIPT

OC000000015405044

Date Mailed: 03/10/2005

Receipt is acknowledged of this regular Patent Application. It will be considered in its order and you will be notified as to the results of the examination. Be sure to provide the U.S. APPLICATION NUMBER, FILING DATE, NAME OF APPLICANT, and TITLE OF INVENTION when inquiring about this application. Fees transmitted by check or draft are subject to collection. Please verify the accuracy of the data presented on this receipt. **If an error is noted on this Filing Receipt, please write to the Office of Initial Patent Examination's Filing Receipt Corrections, facsimile number 703-746-9195. Please provide a copy of this Filing Receipt with the changes noted thereon. If you received a "Notice to File Missing Parts" for this application, please submit any corrections to this Filing Receipt with your reply to the Notice. When the USPTO processes the reply to the Notice, the USPTO will generate another Filing Receipt incorporating the requested corrections (if appropriate).**

Applicant(s)

Raman K. Rao, Palo Alto, CA;
Sunil K. Rao, Palo Alto, CA;
Sanjay K. Rao, Palo Alto, CA;

WRONG
Please see attached applicant's letter dated 4/6/2005

Power of Attorney: None

Domestic Priority data as claimed by applicant

This application is a DIV of 09/591,381 06/09/2000

Foreign Applications

If Required, Foreign Filing License Granted: 03/09/2005

The country code and number of your priority application, to be used for filing abroad under the Paris Convention, is US10/911,211

Projected Publication Date: Request for Non-Publication Acknowledged

Non-Publication Request: Yes

Early Publication Request: No

**** SMALL ENTITY ****

Title

Dynamically configurable IP based wireless device and wireless networks

Preliminary Class

455

LICENSE FOR FOREIGN FILING UNDER
Title 35, United States Code, Section 184
Title 37, Code of Federal Regulations, 5.11 & 5.15

GRANTED

The applicant has been granted a license under 35 U.S.C. 184, if the phrase "IF REQUIRED, FOREIGN FILING LICENSE GRANTED" followed by a date appears on this form. Such licenses are issued in all applications where the conditions for issuance of a license have been met, regardless of whether or not a license may be required as set forth in 37 CFR 5.15. The scope and limitations of this license are set forth in 37 CFR 5.15(a) unless an earlier license has been issued under 37 CFR 5.15(b). The license is subject to revocation upon written notification. The date indicated is the effective date of the license, unless an earlier license of similar scope has been granted under 37 CFR 5.13 or 5.14.

This license is to be retained by the licensee and may be used at any time on or after the effective date thereof unless it is revoked. This license is automatically transferred to any related applications(s) filed under 37 CFR 1.53(d). This license is not retroactive.

The grant of a license does not in any way lessen the responsibility of a licensee for the security of the subject matter as imposed by any Government contract or the provisions of existing laws relating to espionage and the national security or the export of technical data. Licensees should apprise themselves of current regulations especially with respect to certain countries, of other agencies, particularly the Office of Defense Trade Controls, Department of State (with respect to Arms, Munitions and Implements of War (22 CFR 121-128)); the Office of Export Administration, Department of Commerce (15 CFR 370.10 (j)); the Office of Foreign Assets Control, Department of Treasury (31 CFR Parts 500+) and the Department of Energy.

NOT GRANTED

No license under 35 U.S.C. 184 has been granted at this time, if the phrase "IF REQUIRED, FOREIGN FILING LICENSE GRANTED" DOES NOT appear on this form. Applicant may still petition for a license under 37 CFR 5.12, if a license is desired before the expiration of 6 months from the filing date of the application. If 6 months has lapsed from the filing date of this application and the licensee has not received any indication of a secrecy order under 35 U.S.C. 181, the licensee may foreign file the application pursuant to 37 CFR 5.15(b).

IPE JC79
APR 08 2005
PAT & TRADEMARK OFFICE

URGENT URGENT

NOTICE OF USPTO ERROR IN CLAIM FEE CALCULATION AND POTENTIAL EXAMINATION OF INCORRECT CLAIMS.

REQUEST FOR EXAMINATION OF THE CORRECT DIVISIONAL CLAIMS

4/06/05

Mail Stop Missing Parts
Commissioner for Patents
P.O. BOX 1450
ALEXANDRIA, VA 22313-1450

Reference: Application Number: 10/911,211 Filed: 08/03/2004
REQUEST FOR EXAMINATION OF THE CORRECT DIVISIONAL CLAIMS

Dear Sir,
The applicant filed a divisional application on 8/03/2004 with a concurrent submittal of a divisional Preliminary Amendment A wherein new claims 13-35 were included for the purpose of examination as part of the divisional application.

The missing parts notification dated 3/10/2005, notes a fee receipt of $466 and further states that the total claims are 8 and independent claims are 2. This can not be correct as the claims that the applicant requested examination are 13-35, which is a total of 23 claims. The applicant believes that the calculation is in error and is based on the original parent application as submitted in year 2000. Additionally, re examination of these original claims is not the intended purpose of the current divisional application.

Specifically in the current divisional application:
The independent Claims are 13, 14, 29 and 33 for a total of 4 independent claims need to be examined as part of the divisional application. The dependent claims are 15, 16, 17, 18, 19, 20, 21, 22, 23, 24, 25, 26, 27, 28, 30, 31, 32, 34, and 35; for a total of 19 dependent claims.

The very purpose of a divisional application filing is for the purpose of examination of the new claims that were restricted by the examiner in the original filing. Please provide a new input as to the fees that are due from the applicant. The applicant further respectfully requests that the error be corrected and the correct and intended claims be submitted for examination as part of the current divisional application.

Regards,
Raman K. Rao, Applicant
3099 Alexis Drive, Palo Alto, CA 94304. Tel: 650 941 7096, Fax: 650 618 155

Enclosed is a copy of the Preliminary Amendment as submitted to you on 8/03/2004

I hereby certify that this correspondence is being deposited with the United States Postal Service as First Class Mail in an envelope addressed to: Commissioner for Patents, Arlington, VA 22313 on 8/03/2004
Signed: _____ Date: 8/03/2004
Raman K. Rao, Applicant

IN THE UNITED STATES PATENT AND TRADEMARK OFFICE

RELATED REFERENCES TO CURENT DIVISIONAL APPLICATION

Inventor(s)	: RAO	
Serial No.	: 09/591,381	Group Art Unit: 2171
Filed	06/09/2000	Examiner: Mehrpour
For:	DYNAMICALLY CONFIGURABLE WIRELESS DEVICES	

PRELIMINARY AMENDMENT A

Commissioner for Patents
PO BOX 1450
Washington, D. C. 20231

Sir:

This Preliminary Amendment A is submitted concurrently with this divisional application for examination of claims that were restricted in the application 09/591,381 filed on 06/09/2000 which is currently still under examination. The examination of the claims numbered 13-35 is requested.

Ex.1002
APPLE INC. / Page 75 of 610

CLAIMS:

13. In a mobile communication system, a method for dynamically configuring a mobile communication device for one or more selected functions comprising:

utilizing a mobile device configured with input, output and or display capabilities for communication of voice and data,

utilizing a central server,

communicating between a mobile device and a central server by wired or wireless means utilizing one or more communication methods and communication protocols,

configuring the mobile device for a selected first set of functions including communication, computation, command, sense and control for a selected first utility to the mobile device user;

establishing one or more functional instructions for dynamic reconfiguration of the mobile device from a first set of functions to a second set of functions;

storing functional instructions for executing said dynamic reconfiguration of the mobile device from a first set of functions to a second set of functions within the mobile device, the central server including a combination of the mobile device and the central server; further including

storing said functional instruction sets in databases and lookup tables within the mobile device and or the central server for ease and efficiency of execution from a first set of functions to one or more selected second set of functions of the mobile device;

selecting a functional instruction set for a selected reconfiguration of the mobile device from a first set of functions to a selected second set of functions in a standalone manner utilizing the mobile device and or in conjunction with utilizing the central server;

accessing one or more said selected partial or full functional instructions or a set of functional instructions from storage, databases and lookup tables contained within the mobile device itself and/or accessing said selected partial or full functional instructions or a set of functional instructions from storage, databases and lookup tables contained within a central server by wired or wireless communication means;

executing the dynamic reconfiguration of the mobile device from use with a first set of functions to for use with a second set of functions utilizing the processing, storage and database capabilities of the mobile device in a standalone manner and or in conjunction with the processing, storage and database capabilities of a central server, a local server, a network server or a combination thereof;

reconfiguring the mobile device for the selected first set of functions, second set of functions and one or more other set of functions, to provide one or more selected second utility(s) to the mobile device user dynamically in real time or at the selected time.

Ex.1002
APPLE INC. / Page 76 of 610

14. A dynamically reconfigurable mobile communication system, including a mobile communication device for performing selected functions comprising:

a mobile device configured with input, output and or display capabilities for communication of voice and data,

a central server,

means for communication between a mobile device and a central server by wired or wireless means,

means for configuring the mobile device for a selected first set of functions including communication, computation, command, sense and control for a selected first utility to the mobile device user;

means for establishing one or more functional instructions for dynamic reconfiguration of the mobile device from a first set of functions to a second set of functions;

means for storing functional instructions for executing said dynamic reconfiguration of the mobile device from a first set of functions to a second set of functions within the mobile device, the central server including a combination of the mobile device and the central server; including

means for storing said functional instruction sets in databases and lookup tables within the mobile device and or the central server for ease and efficiency of execution from a first set of functions to one or more selected second set of functions of the mobile device;

means for selecting a functional instruction set for a selected reconfiguration of the mobile device from a first set of functions to a selected second set of functions in a standalone manner utilizing the mobile device and or in conjunction with utilizing the central server;

means for accessing one or more said selected partial or full functional instructions or a set of functional instructions from storage, databases and lookup tables contained within the mobile device itself and/or accessing said selected partial or full functional instructions or a set of functional instructions from storage, databases and lookup tables contained within a central server by wired or wireless communication means;

means for executing the dynamic reconfiguration of the mobile device from use with a first set of functions to for use with a second set of functions utilizing the processing, storage and database capabilities of the mobile device in a standalone manner and or in conjunction with the processing, storage and database capabilities of a central server, a local server, a network server or a combination thereof; including

means for reconfiguring the mobile device for the selected first set of functions and or a first set of utility, second set of functions and or a second utility and one or more other set of functions and utility(s), to provide one or more desirable functions and utility(s) to the mobile device user dynamically in real time or at the selected time.

15. A mobile communication system of claim 14 comprising

means for storing a plurality of mobile device functionality instructions on the mobile device and or the local, central and or network server;

means for modifying and generating a plurality of new mobile device functionality instructions by means of the mobile device and or the servers;

means for independently configuring the mobile device functionality in a stand alone manner and or in conjunction with a local, central or network server;

means for using the mobile device functionality instructions in the selected manner and at the selected time.

16. A mobile device communication system of claim 14 comprising

means for dynamically configuring the full or partial functionality of the mobile device by software means without altering the hardware configuration,

means for the functional instruction software to be resident on the mobile device and or on a local, central and or network server,

means for using the functional instruction software resident on the mobile device in a stand alone manner and or in conjunction with the functional instruction software resident on the local, central and or network server,

means for utilizing a plurality of mobile device functionalities with the existing hardware configuration.

17. A mobile communication system of claim 14 comprising

means for enabling one or more specific dynamic mode configurations of the mobile device for desired utility such as a cell phone, a PDA, a remote controller, an IP phone, a music player, a voice recorder, a camera and other devices with specific utility or a combination of utilities to the user;

means for enabling and associating one or more user profiles with the selected mode configuration from one function to another function;

means for storing a plurality of mode configurations, user profiles, functional instructions, program instructions and other enabling tools on the mobile device itself and or the local, central and or network server;

means for dynamically reconfiguring and utilizing the desired mode configuration and or the desired user profile by means of the functional instructions and program instructions in conjunction with the processing power, storage, databases and lookup tables of the mobile device by itself and or in conjunction with the processing power, storage, databases and lookup tables of the local, central and or network server;

Ex.1002
APPLE INC. / Page 78 of 610

means for utilizing the existing mobile device hardware for a specific function or a combination of functions for a desired utility to the mobile device user dynamically or at the selected time in conjunction with the software and functional instructions resident within the mobile device, a central server, a local server, a network server or a combination thereof.

18. A mobile communication system of claim 14 comprising

means for configuration of the mobile device for communication utilizing one or more communication methods and or communication protocols such as Bluetooth, Wi-Fi, IP, 802.XX, cellular, and other methods

means for selecting a first communication method and or a first communication protocol,

means for communication with a first communication method and or a first communication protocol;

means for selecting a second communication method and or a second communication protocol;

means for communication with a second communication method and or a second communication protocol; including

means for switching from a first communication method and or a first communication protocol to a second communication method and or a second communication protocol dynamically or at the selected time;

means for executing communication, computation, command, control and other functions for a selected utility to the mobile device user utilizing one or more communication methods and or communication protocols in a standalone manner leveraging the processing, storage, database and lookup tables maintained within the mobile device itself and or in conjunction with a central server, a local server, a network server or a combination thereof.

19. A mobile communication system of claim 18 comprising

means for dynamically sensing a communication method and or a communication protocol,

means for switching from a first communication method and or a first communication protocol to said sensed second communication method and or a second communication protocol dynamically or at the selected time;

means for executing communication, computation, command, control and other functions seamlessly for a selected utility to the mobile device user utilizing one or more communication methods and or communication protocols in a standalone manner leveraging the processing, storage, database and lookup tables maintained within the mobile device itself and or in conjunction with a central server, a local server, a network server or a combination thereof.

Ex.1002
APPLE INC. / Page 79 of 610

20. A mobile device communication system of 14 comprising

a mobile device configured with one or more input and output channels of communication,

a central server,
means for wired or wireless communication between a mobile device and a central server,

means for selecting and configuring one or more input and output channels of a mobile device for a selected communication and utility,

means for voice communication on a selected first channel of a mobile device,

means for data, audio, video or other communications on selected same or different channel of a mobile device,

means for sequential or simultaneous communication on a selected communication channel by multiplexing the same channel or utilizing alternate channels;

means for a plurality of communication methods, communication types and functions on a selected channel;

means for utilizing one or more input and output channels of a mobile device for a selected function and or utility in conjunction with the capabilities of the mobile device by itself and or in conjunction with the capabilities of a central server, a local server, a network server or a combination thereof.

21. A mobile device communication system of claim 20 further comprising

means for enabling the mobile device for voice and data communication on one or more selected input and output channels ;

means for enabling the mobile device for communication of audio, video, data, broadcast and or other communication on one or more input and output channels,

means for enabling dynamic reconfiguration by means of functional instructions, program instructions and or other means wherein the instructions are resident on the mobile device and or the servers,

means for dynamically or at a desired time selecting the desired communication parameters such as the frequency, power and communication protocols for reconfiguring one or more input and output channels; including

means for dynamically or at a desired time altering and modifying the full or partial functionality of the mobile device in a stand alone manner using the processing power, storage and data bases of the mobile device in a stand alone manner and or in conjunction with the processing power, storage and data bases of the local, central and or network servers; including

means for altering and modifying the functionality of the desired input and output channels of the mobile device; including

means for multiplexing one or more of the input and one or more of the output channels for the desired communication, computation, command and control functions; further including

means for dynamically and or at the desired time configuring the mobile device for a plurality of interfaces for one or more types of input, output and display.

22. A mobile device communication system of claim 20 comprising

means for dynamic signaling and sensing of the communication environment, the communication methods, communication parameters and or the functional instructions, by radio frequency signaling and or other methods;

means for enabling disparate communication methods by dynamically adjusting communication parameters such as the frequency of transmission/receiving, power levels and other parameters which are best suited to a specific environment by functional instructions or other means,

means for dynamic switching of the communication parameters for transition from one communication environment and or communication method to another;

means for enabling a single mobile device to perform a plurality of same or disparate functions on one or more channels;

means for a mobile device to transform itself dynamically to execute a multiplicity of desired functions, on one or more input and output channels, by utilizing the processing power and software resident in the mobile device itself and or in conjunction with the processing power and software resident on the servers.

23. A mobile device communication system of claim 20 comprising

means for dynamically and independently tuning one or more input and output channels of the mobile device,

means for dynamically and independently tuning the input and output channels based on various parameters such as power, frequency, signal to noise ratio, desired and allowable error rates for data transfer and other factors;

means for dynamically optimizing the performance of the mobile device for efficient operation in the desired environment.

Ex.1002
APPLE INC. / Page 81 of 610

24. A mobile device communication system of claim 20 comprising

means for the mobile device to bypass the public carrier operating frequencies for voice and or data communication on one or more input and output channels;

means for communication of voice and data using the desired home, office, factory, transportation system or other operating frequencies using the desired input and output channels of the mobile device; and or

means for contemporaneous operation on public carrier and or private carrier frequencies on the selected input and output channels of the mobile device.

25. A mobile device communication system of claim 20 comprising

a Global Positioning Server,

means of wired or wireless communication with the GPS server,

means for determining the geographical location of the mobile device,

means for sensing the macro and micro communication environments in a selected environment and location wherein the mobile device is present,

means for dynamically selecting the desired communication methods and communication parameters on one or more input and output channels of the mobile device,

means for enabling the desired communication on one or more input and output channels of the mobile device.

26. A mobile device communication system of claim 20 comprising

means for the mobile device to be enabled with a sleep mode and or watch dog mode on one or more input and output channels,

means for instantaneously switching from a sleep mode and or watch dog mode to an active mode on one or more desired input and output channels of the mobile device,

means for sensing the communication environment by the mobile device,

means for the mobile device to sense other mobile devices,

means for the mobile device to sense using a plurality of communication methods inclusive of radio frequency and or other means,

means for the mobile device to sense one or more servers,

means for the mobile device to execute the desired communication and desired functions at the desired time and in the desired sequence.

27. A mobile device communication system of claim 20 comprising

means for the mobile device to operate in a wireless manner on one or more input and output channels,

means for the same mobile device to operate in a wired manner on one or more input and output channels

means for the selection and enabling of the desired input and output channels of the mobile device for wired or wireless communication.

28. A mobile device communication system of claim 20 comprising

means for enabling a selection of a plurality of communication modes on one or more input and output channels of the mobile device,

means for selecting and enabling a primary communication mode on one or more input and output channels of the mobile device,

means for selecting and enabling a secondary communication mode on one or more input and output channels of the mobile device,

means for enabling a hierarchy of communication modes on a mobile device for communication at a desired time and in desired order on one or more input and output channels,

means for instantaneously, dynamically or in a delayed manner enabling the desired communication mode on the desired input and output channel of the mobile device.

29. A mobile device communication system comprising

a mobile device,

local, central and or network servers,

means for wired or wireless communication using public carrier communication loops, private carrier communication loops, office/factory communication loops and home communication loops, said loops operating with same or disparate communication methods and or communication parameters for wired or wireless communication in a selected environment;

means for the mobile device to instantaneously recognize the communication environment and determine the nature of the public, private, office, factory, transportation or home carrier communication methods and communication parameters,

means for selecting instantaneously and or at a desired time and switching the carrier(s) for desired communication on a desired input and output communication channel of the mobile device;

Ex.1002
APPLE INC. / Page 83 of 610

means for operation with one single mobile device in multiple carrier environments on one or more input and output channels of the mobile device;

means for operation by the mobile device in a standalone manner and or in conjunction with a local, central and or network server.

30. A mobile device communication system of claim 29 comprising

means for voice, data and video communication on one or more channels of the mobile device,

means for maintaining a plurality of functional instructions on the mobile device and or the network servers,

means for enabling the mobile device to be configured for wired or wireless remote command and control applications such as TV, entertainment, gaming, appliance control, intelligent appliance control, intelligent sensing and control, intelligent equipment control and other control applications for the home, office, transportation systems, factory and other applications;

means for a plurality of same or different control applications being enabled sequentially or contemporaneously on one or more input and output channels of the mobile device;

means for enabling the control applications using the processing power, storage and databases of the mobile device by itself and or in conjunction with the processing power, storage and databases of the local, central and or network server.

31. A mobile device communication system of claim 29 comprising

means for voice, data and video communication on one or more channels of the mobile device,

means for maintaining a plurality of functional instructions on the mobile device and or the network servers,

means for dynamically configuring the mobile device with a plurality of functional instructions on one or more channels;

means for enabling the emulation of the mobile device for one or more same or disparate functions;

means for enabling the mobile device to emulate and perform the functions of a cordless telephone, a cellular telephone, a PDA, an Internet Protocol based IP telephone and other disparate computation, communication, command and control device functions on one or more input and output channels of the mobile device;

means for the communication, command, control and computation functions to be emulated and enabled by using the processing power/storage and databases of the mobile device by itself and or in conjunction with the processing power, storage and databases of the local, central and or network server.

Ex.1002
APPLE INC. / Page 84 of 610

32. A mobile device communication system of claim 29 comprising

means for the mobile device to be dynamically assigned a plurality of identification numbers,

means for the identification means to include a plurality of identification methods such as telephone numbers, static IP address number, dynamic IP address number and other numbers;

means for the mobile device to be dynamically configured for voice and data communication,

means for using one or more of the telephone numbers and other identification numbers sequentially or contemporaneously on the same mobile device for desired communication,

means for recognizing and relating the incoming and outgoing communications with the telephone number means and or other identification number means by visual, audible and other input, output, display and interface methods;

means for communication on one or more input and output channels of the mobile device with same or disparate identification numbers and or communication methods; and or

means for dynamically configuring the mobile device for communication and operation using the Internet Protocol, IP, based communication methods and or non IP based communication methods, on one or more input and output channels of the mobile device, for sequential or contemporaneous use

means for dynamically switching between the IP mode and non IP mode for communication on one or more input and output channels of the mobile device by software means, functional instructions or other methods,

means for dynamically enabling the communications of voice, audio, video and data in the IP mode and or non IP mode on the mobile device by utilizing software means, functional instructions means and or other methods with or without altering the hardware configuration of the mobile device

means for enabling the operation in the IP mode and or non IP mode by using the processing power, storage and databases of the mobile device in a standalone manner and or in conjunction with the processing power, storage and databases of the local, central and or network server.

33. A mobile device communication system comprising

a mobile device,

a central server,

a network control box having one or more input and output channels located with an office, home, factory, office buildings or other locations,

means for wired or wireless communication by the network control box on one or more channels using one or more communication methods and associated communication parameters;

Ex.1002
APPLE INC. / Page 85 of 610

means for selection and operation of the channels of the network box at one or more transmit and receive frequencies, power levels, signal to noise ratios and bandwidths;

means for interfacing between the mobile device and the network control box by using wired or wireless communication methods in a bilateral manner and or in conjunction the local, central and or network server; including

means for the network control box to operate at one or more public carrier, private carrier, office loop, home loop and other communication frequencies and modes;

means for the mobile device to operate in conjunction with the network box by selecting the desired communication mode and the communication loop appropriate for the intended communication on the selected input and or output channels of the mobile device and or the selected input/output channels of the network control box;

means for managing the operation of the network control box by functional instructions resident within the network control box and or derived from the mobile device acting by itself and or in conjunction with functional instructions resident on a central server, a local or network server;

means for the network control box input and output channels to be dynamically configured for communication in same or different communication modes,

means for configuring the network control box for desired utility by the mobile device acting in a stand alone manner and or in conjunction with the local, central and or network server.

34. A mobile device communication system of claim 33 comprising

means for the network control box to dynamically sense a mobile device operating within range of the network control box;

means for the mobile device to dynamically sense a network control box operating within range of the mobile device;

means for the mobile device and the network control box to recognize, authenticate and enable communication with each other;

means for dynamic switching from a first set of communication methods and communication protocols to a second set of communication methods and communication protocols that are acceptable for the mobile device user and the network control box;

means for seamless and dynamic operation of the mobile device in a plurality of environments and locations for a selected utility to the mobile device user utilizing the capabilities of the mobile device and a network control box or utilizing the capabilities of the mobile device, the network control box, a central server, a local server, a network server or a combination thereof.

Ex.1002
APPLE INC. / Page 86 of 610

35. A mobile device communication system of claim 34 comprising

a plurality of mobile devices,

means for a first mobile device to communicate with the network control box utilizing a first communication method and or a first communication protocols;

means for a second mobile device to communicate with the network control box utilizing a second communication method and or a second communication protocols;

means for the network control box to seamlessly enable communication between the first mobile device and the second mobile device utilizing same or disparate communication methods and or communication protocols;

means for switching and or translation including communication method translations and or protocol translations from a first communication method/protocol to a second communication method/protocol within the network control box itself and or performing said functions in conjunction with a central server, a local server, a network server or a combination thereof wherein said switching and translation instructions and algorithms reside within the network control box and or one or more servers;

means for dynamic and seamless communication between a plurality of communication devices utilizing same or disparate communication methods and or communication protocols utilizing the capabilities of the mobile devices by themselves in conjunction with each other, in conjunction with the network control box and or in conjunction with a central server, a local server, a network server or a combination thereof.

Ex.1002
APPLE INC. / Page 87 of 610

REMARKS

The attached claims are central to the original specification and the drawings therein filed on as application number 09/591, 389 filed on 06/09/2000. The applicant respectfully submits that Levac even if combined with Houde does not teach the features, claimed by Rao et al. Examination of these claims is respectfully requested.

Respectfully submitted,

By
Raman K. Rao, Applicant

Raman K. Rao
3099 Alexis Drive,
Palo Alto, CA 94304-1304
Telephone: (650) 941-7096
Fax: (650_ 618-1553

Ex.1002
APPLE INC. / Page 88 of 610

Courtney Staniford & Gregory LLP

Intellectual Property Attorneys

Tel: 408-342-1900
Fax: 408-342-1909

10001 N. De Anza Blvd., Suite 300
Cupertino, California 95014

P.O. Box 9686
San Jose, California 95157
www.csgip.com

RECEIVED
CENTRAL FAX CENTER

DEC 11 2006

Fax

To: USPTO

From: Barbara Courtney
Courtney Staniford & Gregory & LLP
Phone: 408-342-1902
Fax: 408-342-1909

Fax: 571-273-8300 Pages: 4 including cover

Phone: 571-272-1000 Date: December 11, 2006

Re: **Serial No. 10/911,211**
Atty Docket No. IPHD.P031 CC:

☑ Urgent ☑ For Review ☑ Please Comment ☑ Please Acknowledge

Certification under 37 C.F.R. § 1.8(a)
I HEREBY CERIFY THAT THIS CORRESPONDENCE IS BEING FILED VIA TELEFACSIMILE TO THE UNITED STATE PATENT AND TRADEMARK OFFICE, AT **571-273-3200** ON:

December 11, 2006 By: Dawn Rose

1. Power of Attorney and Correspondence Address Indication Form
3. Certificate of Facsimile Transmission

Confidentiality Note
This facsimile transmission contains information which is confidential. If you are not the intended recipient named on this cover page, be aware that any disclosure, copying, distribution or use of this faxed information is prohibited. If you have received this facsimile in error, please notify us by telephone immediately so that we can arrange for the retrieval of the original documents at no cost to you.

PAGE 1/4 * RCVD AT 12/11/2006 1:57:37 PM [Eastern Standard Time] * SVR:USPTO-EFXRF-6/44 * DNIS:2738300 * CSID:14083421909 * DURATION (mm-ss):00-50

BEST AVAILABLE COPY

RECEIVED
CENTRAL FAX CENTER

DEC 11 2006

PTO/SB/81 (01-06)
Approved for use through 12/31/2006 OMB 0651-0035
U.S. Patent and Trademark Office: U.S. DEPARTMENT OF COMMERCE
Under the Paperwork Reduction Act of 1995, no persons are required to respond to a collection of information unless it displays a valid OMB control number.

POWER OF ATTORNEY and CORRESPONDENCE ADDRESS INDICATION FORM

Application Number	10/911,211
Filing Date	10/13/04
First Named Inventor	Raman K. Rao
Title	Dynamically Configurable Wireless Devices
Art Unit	
Examiner Name	
Attorney Docket Number	IPHD.P031

I hereby revoke all previous powers of attorney given in the above-identified application.

I hereby appoint:

☑ Practitioners associated with the Customer Number: 53186

OR

☐ Practitioner(s) named below:

Name	Registration Number

as my/our attorney(s) or agent(s) to prosecute the application identified above and to transact all business in the United States Patent and Trademark Office connected therewith.

Please recognize or change the correspondence address for the above-identified application to:

☑ The address associated with the above-mentioned Customer Number:

OR

☐ The address associated with Customer Number:

OR

☐ Firm or Individual Name					
Address					
City		State		Zip	
Country					
Telephone		Email			

I am the:

☑ Applicant/Inventor

☐ Assignee of record of the entire interest. See 37 CFR 3.71.
Statement under 37 CFR 3.73(b) is enclosed. (Form PTO/SB/96)

SIGNATURE of Applicant or Assignee of Record

Signature	Raman K. Rao	Date	12/8/2006
Name	Sunil K. Rao	Telephone	
Title and Company			

NOTE: Signatures of all the inventors or assignees of record of the entire interest or their representative(s) are required. Submit multiple forms if more than one signature is required, see below*.

☑ *Total of THREE forms are submitted.

This collection of information is required by 37 CFR 1.31, 1.32 and 1.33. The information is required to obtain or retain a benefit by the public which is to file (and by the USPTO to process) an application. Confidentiality is governed by 35 U.S.C. 122 and 37 CFR 1.11 and 1.14. This collection is estimated to take 3 minutes to complete, including gathering, preparing, and submitting the completed application form to the USPTO. Time will vary depending upon the individual case. Any comments on the amount of time you require to complete this form and/or suggestions for reducing this burden, should be sent to the Chief Information Officer, U.S. Patent and Trademark Office, U.S. Department of Commerce, P.O. Box 1450, Alexandria, VA 22313-1450. DO NOT SEND FEES OR COMPLETED FORMS TO THIS ADDRESS. SEND TO: Commissioner for Patents, P.O. Box 1450, Alexandria, VA 22313-1450

If you need assistance in completing the form, call 1-800-PTO-9199 and select option 2

BEST AVAILABLE COPY

RECEIVED
CENTRAL FAX CENTER

DEC 11 2006

PTO/SB/81 (01-06)
Approved for use through 12/31/2006 OMB 0651-0035
U.S. Patent and Trademark Office; U.S. DEPARTMENT OF COMMERCE
Under the Paperwork Reduction Act of 1995, no persons are required to respond to a collection of information unless it displays a valid OMB control number.

POWER OF ATTORNEY and CORRESPONDENCE ADDRESS INDICATION FORM

Application Number	10/911,211
Filing Date	10/13/04
First Named Inventor	Raman K. Rao
Title	Dynamically Configurable Wireless Devices...
Art Unit	
Examiner Name	
Attorney Docket Number	IPHD.P031

I hereby revoke all previous powers of attorney given in the above-identified application.

I hereby appoint:

☑ Practitioners associated with the Customer Number: 53188

OR

☐ Practitioner(s) named below:

Name	Registration Number

as my/our attorney(s) or agent(s) to prosecute the application identified above and to transact all business in the United States Patent and Trademark Office connected therewith.

Please recognize or change the correspondence address for the above-identified application to:

☑ The address associated with the above-mentioned Customer Number:

OR

☐ The address associated with Customer Number:

OR

☐ Firm or Individual Name	
Address	
City	State / Zip
Country	
Telephone	Email

I am the:

☑ Applicant/Inventor

☐ Assignee of record of the entire interest. See 37 CFR 3.71.
Statement under 37 CFR 3.73(b) is enclosed. (Form PTO/SB/96)

SIGNATURE of Applicant or Assignee of Record

Signature	R. Rao	Date	12/6/2006
Name	Raman K. Rao	Telephone	
Title and Company			

NOTE: Signatures of all the inventors or assignees of record of the entire interest or their representative(s) are required. Submit multiple forms if more than one signature is required, see below*.

☑ *Total of THREE forms are submitted.

This collection of information is required by 37 CFR 1.31, 1.32 and 1.33. The information is required to obtain or retain a benefit by the public which is to file (and by the USPTO to process) an application. Confidentiality is governed by 35 U.S.C. 122 and 37 CFR 1.11 and 1.14. This collection is estimated to take 3 minutes to complete, including gathering, preparing, and submitting the completed application form to the USPTO. Time will vary depending upon the individual case. Any comments on the amount of time you require to complete this form and/or suggestions for reducing this burden, should be sent to the Chief Information Officer, U.S. Patent and Trademark Office, U.S. Department of Commerce, P.O. Box 1450, Alexandria, VA 22313-1450. DO NOT SEND FEES OR COMPLETED FORMS TO THIS ADDRESS. SEND TO: **Commissioner for Patents, P.O. Box 1450, Alexandria, VA 22313-1450**

If you need assistance in completing the form, call 1-800-PTO-9199 and select option 2

BEST AVAILABLE COPY

RECEIVED
CENTRAL FAX CENTER

DEC 11 2006

PTO/SB/81 (01-06)
Approved for use through 12/31/2006 OMB 0651-0035
U.S. Patent and Trademark Office; U.S. DEPARTMENT OF COMMERCE
Under the Paperwork Reduction Act of 1995, no persons are required to respond to a collection of information unless it displays a valid OMB control number.

POWER OF ATTORNEY and CORRESPONDENCE ADDRESS INDICATION FORM

Application Number	10/911,211
Filing Date	10/13/04
First Named Inventor	Raman K. Rao
Title	Dynamically Configurable Wireless Devices
Art Unit	
Examiner Name	
Attorney Docket Number	IPMD.P031

I hereby revoke all previous powers of attorney given in the above-identified application.

I hereby appoint:

☑ Practitioners associated with the Customer Number: 53166

OR

☐ Practitioner(s) named below:

Name	Registration Number

as my/our attorney(s) or agent(s) to prosecute the application identified above and to transact all business in the United States Patent and Trademark Office connected therewith.

Please recognize or change the correspondence address for the above-identified application to:

☑ The address associated with the above-mentioned Customer Number:

OR

☐ The address associated with Customer Number:

OR

☐	Firm or (Individual) Name				
	Address				
	City		State		Zip
	Country				
	Telephone		Email		

I am the:

☑ Applicant/Inventor

☐ Assignee of record of the entire interest. See 37 CFR 3.71.
Statement under 37 CFR 3.73(b) is enclosed. (Form PTO/SB/96)

SIGNATURE of Applicant or Assignee of Record

Signature		Date	12/6/2006
Name	Sanjay K. Rao	Telephone	
Title and Company			

NOTE: Signatures of all the inventors or assignees of record of the entire interest or their representative(s) are required. Submit multiple forms if more than one signature is required, see below*.

☑ *Total of THREE forms are submitted.

This collection of information is required by 37 CFR 1.31, 1.32 and 1.33. The information is required to obtain or retain a benefit by the public which is to file (and by the USPTO to process) an application. Confidentiality is governed by 35 U.S.C. 122 and 37 CFR 1.11 and 1.14. This collection is estimated to take 3 minutes to complete, including gathering, preparing, and submitting the completed application form to the USPTO. Time will vary depending upon the individual case. Any comments on the amount of time you require to complete this form and/or suggestions for reducing this burden, should be sent to the Chief Information Officer, U.S. Patent and Trademark Office, U.S. Department of Commerce, P.O. Box 1450, Alexandria, VA 22313-1450. DO NOT SEND FEES OR COMPLETED FORMS TO THIS ADDRESS. SEND TO: Commissioner for Patents, P.O. Box 1450, Alexandria, VA 22313-1450.

If you need assistance in completing the form, call 1-800-PTO-9199 and select option 2.

BEST AVAILABLE COPY

			6339706.pn. "6223029".pn. "6295448".pn. "5404579".pn. "6873841".pn. "6393297".pn.	US-PGPUB; USPAT; USOCR;	
BRS	S1	10	"5559800".pn. "6754710".pn. "6587691".pn. "6496575".pn.	FPRS; EPO; JPO; IBM_TDB	4/23/2007 7:51
				US-PGPUB; USPAT; USOCR;	
BRS	S2	4	6681259.pn. "6496575".pn. "6952578".pn. "7085257".pn.	FPRS; EPO; JPO; IBM_TDB	4/20/2007 15:45
				US-PGPUB; USPAT; USOCR;	
BRS	S3	3	6539237.pn. "5953323".pn. "6853851".pn.	FPRS; EPO; JPO; IBM_TDB	4/20/2007 17:30
				US-PGPUB; USPAT; USOCR;	
BRS	S4	12993	(roaming handoff handover hand$1off hand$1over) same (mode location position)	FPRS; EPO; JPO; IBM_TDB	4/23/2007 8:13
				US-PGPUB; USPAT; USOCR;	
BRS	S5	8250	(roaming handoff handover hand$1off hand$1over) with (mode location position)	FPRS; EPO; JPO; IBM_TDB	4/23/2007 8:14
				US-PGPUB; USPAT; USOCR;	
BRS	S6	56169	(configur$4 reconfigur$4 autoconf ad$1hoc) with (((device terminal phone telephone station handset) with (mobile portable car cell cellular digital radio wireless)) UE MT)	FPRS; EPO; JPO; IBM_TDB	4/23/2007 8:08
				US-PGPUB; USPAT; USOCR;	
BRS	S7	1777	S5 and S6	FPRS; EPO; JPO; IBM_TDB	4/23/2007 8:02
				US-PGPUB; USPAT; FPRS;	
BRS	S8	577	S7 and (@ad<"20000609" @rlad<"20000609" @pd<"20000609")	EPO; JPO; IBM_TDB	4/23/2007 8:06
BRS	S9	404579	(stor$4) with (database table list)	US-PGPUB; USPAT; FPRS;	4/23/2007 8:08
BRS	S10	821	S5 and S6 and S9	US-PGPUB; USPAT; FPRS;	4/23/2007 8:09
				US-PGPUB; USPAT; FPRS;	
BRS	S11	275	S10 and (@ad<"20000609" @rlad<"20000609" @pd<"20000609")	EPO; JPO; IBM_TDB	4/23/2007 16:25
BRS	S12	6	S5 same S6 same S9	US-PGPUB; USPAT; FPRS;	4/23/2007 8:09
				US-PGPUB; USPAT; USOCR;	
BRS	S13	2811	(roaming handoff handover hand$1off hand$1over) with (mode)	FPRS; EPO; JPO; IBM_TDB	4/23/2007 8:14
				US-PGPUB; USPAT; USOCR;	
BRS	S14	236	S13 and S9 and S6	FPRS; EPO; JPO; IBM_TDB	4/23/2007 8:14
				US-PGPUB; USPAT; FPRS;	
BRS	S15	77	S14 and (@ad<"20000609" @rlad<"20000609" @pd<"20000609")	EPO; JPO; IBM_TDB	4/23/2007 10:08
				US-PGPUB; USPAT; FPRS;	
BRS	S16	5	6085101.pn. "5872926".pn. "5905958".pn. "6421429".pn. "6826405".pn.	EPO; JPO; IBM_TDB	4/24/2007 18:13
BRS	S17	1	5737394.pn.	US-PGPUB; USPAT; FPRS;	4/23/2007 13:15
BRS	S18	3	6993362.pn. "6047197".pn. "6263217".pn.	US-PGPUB; USPAT; FPRS;	4/23/2007 13:33
BRS	S20	5	09/434155	US-PGPUB; USPAT; FPRS;	4/23/2007 13:43
BRS	S22	1	6470179.pn.	US-PGPUB; USPAT; FPRS;	4/23/2007 14:25
BRS	S23	2	6161008.pn. "5742668".pn.	US-PGPUB; USPAT; FPRS;	4/23/2007 14:57
BRS	S24	2	5903832.pn. "6853851".pn.	US-PGPUB; USPAT; FPRS;	4/23/2007 15:00
BRS	S19	1	6828992.pn.	US-PGPUB; USPAT; FPRS;	4/23/2007 13:37
				US-PGPUB; USPAT; USOCR;	
BRS	S27	199453	network with (select$4 sens$4 configur$4)	FPRS; EPO; JPO; IBM_TDB	4/23/2007 16:25
BRS	S21	2	6167283.pn. "6359896".pn.	US-PGPUB; USPAT; FPRS;	4/23/2007 13:55
				US-PGPUB; USPAT; USOCR;	
BRS	S26	1966	(public and private and home and office) with network	FPRS; EPO; JPO; IBM_TDB	4/23/2007 16:22
				US-PGPUB; USPAT; USOCR;	
BRS	S28	1490	S26 and S27	FPRS; EPO; JPO; IBM_TDB	4/23/2007 16:24
				US-PGPUB; USPAT; USOCR;	
BRS	S25	1	6219539.pn.	FPRS; EPO; JPO; IBM_TDB	4/23/2007 16:22
				US-PGPUB; USPAT; FPRS;	
BRS	S29	603	S28 and (@ad<"20000609" @rlad<"20000609" @pd<"20000609")	EPO; JPO; IBM_TDB	4/23/2007 16:27
				US-PGPUB; USPAT; USOCR;	
BRS	S30	33437	network with (select$4 sens$4 configur$4) with (location position gps region area vicinity)	FPRS; EPO; JPO; IBM_TDB	4/23/2007 16:27
				US-PGPUB; USPAT; USOCR;	
BRS	S31	496	S26 and S30	FPRS; EPO; JPO; IBM_TDB	4/23/2007 16:29
				US-PGPUB; USPAT; FPRS;	
BRS	S32	221	S31 and (@ad<"20000609" @rlad<"20000609" @pd<"20000609")	EPO; JPO; IBM_TDB	4/23/2007 16:28
BRS	S33	122	S31 and (@ad<"20000609" @pd<"20000609")	US-PGPUB; USPAT; FPRS;	4/24/2007 16:06
				US-PGPUB; USPAT; USOCR;	
BRS	S34	207	S26 and S30 and (network with mode)	FPRS; EPO; JPO; IBM_TDB	4/23/2007 16:30
BRS	S35	70	S34 and (@ad<"20000609" @pd<"20000609")	US-PGPUB; USPAT; FPRS;	4/23/2007 16:30
				US-PGPUB; USPAT; USOCR;	
BRS	S36	449	S26 and S30 and (network with control)	FPRS; EPO; JPO; IBM_TDB	4/23/2007 16:30
BRS	S37	115	S36 and (@ad<"20000609" @pd<"20000609")	US-PGPUB; USPAT; FPRS;	4/23/2007 16:31
BRS	S38	2	6826414.pn. "6112088".pn.	US-PGPUB; USPAT; FPRS;	4/24/2007 12:42
BRS	S39	1	6993359.pn.	US-PGPUB; USPAT; FPRS;	4/24/2007 12:58
BRS	S40	30112	(public and private) with network	US-PGPUB; USPAT; FPRS;	4/24/2007 16:01
BRS	S41	1162781	(API interface gui console)	US-PGPUB; USPAT; FPRS;	4/24/2007 16:06
BRS	S42	36865	(handoff handover roam$4 hand$1off hand$1over)	US-PGPUB; USPAT; FPRS;	4/24/2007 16:04
BRS	S43	2865	S40 and S41 and S42	US-PGPUB; USPAT; FPRS;	4/24/2007 16:03
BRS	S44	1987	S43 and ("455".clas. "370".clas.)	US-PGPUB; USPAT; FPRS;	4/24/2007 16:04
			(handoff handover roam$4 hand$1off hand$1over switch$4) with (public and private) with	US-PGPUB; USPAT; FPRS;	
BRS	S45	6073	network	EPO; JPO; IBM_TDB	4/24/2007 16:14
BRS	S46	5291	S41 and S45	US-PGPUB; USPAT; FPRS;	4/24/2007 16:05
BRS	S47	1759	S46 and (@ad<"20000609" @pd<"20000609")	US-PGPUB; USPAT; FPRS;	4/24/2007 16:07
				US-PGPUB; USPAT; FPRS;	
BRS	S48	475108	(API interface gui console) with (control$4 manag$4 configur$4 select$4)	EPO; JPO; IBM_TDB	4/24/2007 16:07
BRS	S49	3748	S45 and S48	US-PGPUB; USPAT; FPRS;	4/24/2007 16:10

BRS	S50	1283	S49 and (@ad<"20000609" @pd<"20000609")	US-PGPUB; USPAT; FPRS;	4/24/2007 16:15
BRS	S62	32	S61 and (@ad<"20000609" @pd<"20000609")	US-PGPUB; USPAT; FPRS;	4/24/2007 16:36
BRS	S51	475108	((API interface gui console) with (control$4 manag$4 configur$4 select$4))	US-PGPUB; USPAT; FPRS; EPO; JPO; IBM_TDB	4/24/2007 16:10
BRS	S52	6073	((handoff handover roam$4 hand$1off hand$1over switch$4) with (public and private) with network)	US-PGPUB; USPAT; FPRS; EPO; JPO; IBM_TDB	4/24/2007 16:08
BRS	S53	49	S50 and (SIM (smart$1card))	US-PGPUB; USPAT; FPRS;	4/24/2007 16:12
BRS	S54	1263	(handoff handover roam$4 hand$1off hand$1over switching) with (public and private) with network	US-PGPUB; USPAT; FPRS; EPO; JPO; IBM_TDB	4/24/2007 16:15
BRS	S55	189	S45 and S48 and (SIM smart$1card)	US-PGPUB; USPAT; FPRS;	4/24/2007 16:35
BRS	S56	49	S55 and (@ad<"20000609" @pd<"20000609")	US-PGPUB; USPAT; FPRS;	4/24/2007 16:27
BRS	S57	1166	S45 and S48 and (billing)	US-PGPUB; USPAT; FPRS;	4/24/2007 16:27
BRS	S58	437	S57 and (@ad<"20000609" @pd<"20000609")	US-PGPUB; USPAT; FPRS;	4/24/2007 16:36
BRS	S59	95	S45 and S48 and (SIM smart$1card) and billing	US-PGPUB; USPAT; FPRS;	4/24/2007 16:35
BRS	S60	112	S45 and S48 and (SIM smart$1card) and (billing tracking)	US-PGPUB; USPAT; FPRS; EPO; JPO; IBM_TDB	4/24/2007 16:35
BRS	S61	137	S45 and S48 and (SIM smart$1card) and (billing tracking monitoring)	US-PGPUB; USPAT; FPRS; EPO; JPO; IBM_TDB	4/24/2007 16:35
BRS	S63	2	6356543.pn. "6546002".pn.	US-PGPUB; USPAT; FPRS;	4/24/2007 18:13
BRS	S64	1	7042905.pn.	US-PGPUB; USPAT; FPRS;	4/26/2007 17:31
BRS	S65	1	6529491.pn.	US-PGPUB; USPAT; FPRS;	4/26/2007 17:31

UNITED STATES PATENT AND TRADEMARK OFFICE

UNITED STATES DEPARTMENT OF COMMERCE
United States Patent and Trademark Office
Address: COMMISSIONER FOR PATENTS
P.O. Box 1450
Alexandria, Virginia 22313-1450
www.uspto.gov

APPLICATION NO.	FILING DATE	FIRST NAMED INVENTOR	ATTORNEY DOCKET NO.	CONFIRMATION NO.
10/911,211	10/13/2004	Raman K. Rao	IPHD.P031	7409

53186 7590 05/04/2007
COURTNEY STANIFORD & GREGORY LLP
P.O. BOX 9686
SAN JOSE, CA 95157

EXAMINER	
WANG, DAVID	

ART UNIT	PAPER NUMBER
2617	

MAIL DATE	DELIVERY MODE
05/04/2007	PAPER

Please find below and/or attached an Office communication concerning this application or proceeding.

The time period for reply, if any, is set in the attached communication.

Office Action Summary	Application No.	Applicant(s)	
	10/911,211	RAO ET AL.	
	Examiner	Art Unit	
	David Y. Wang	2617	

-- The MAILING DATE of this communication appears on the cover sheet with the correspondence address --

Period for Reply

A SHORTENED STATUTORY PERIOD FOR REPLY IS SET TO EXPIRE 3 MONTH(S) OR THIRTY (30) DAYS, WHICHEVER IS LONGER, FROM THE MAILING DATE OF THIS COMMUNICATION.

- Extensions of time may be available under the provisions of 37 CFR 1.136(a). In no event, however, may a reply be timely filed after SIX (6) MONTHS from the mailing date of this communication.
- If NO period for reply is specified above, the maximum statutory period will apply and will expire SIX (6) MONTHS from the mailing date of this communication.
- Failure to reply within the set or extended period for reply will, by statute, cause the application to become ABANDONED (35 U.S.C. § 133). Any reply received by the Office later than three months after the mailing date of this communication, even if timely filed, may reduce any earned patent term adjustment. See 37 CFR 1.704(b).

Status

1)☒ Responsive to communication(s) filed on *06 April 2005*.

2a)☐ This action is **FINAL**. 2b)☒ This action is non-final.

3)☐ Since this application is in condition for allowance except for formal matters, prosecution as to the merits is closed in accordance with the practice under *Ex parte Quayle*, 1935 C.D. 11, 453 O.G. 213.

Disposition of Claims

4)☒ Claim(s) *13-35* is/are pending in the application.

4a) Of the above claim(s) _____ is/are withdrawn from consideration.

5)☐ Claim(s) _____ is/are allowed.

6)☒ Claim(s) *13-35* is/are rejected.

7)☐ Claim(s) _____ is/are objected to.

8)☐ Claim(s) _____ are subject to restriction and/or election requirement.

Application Papers

9)☐ The specification is objected to by the Examiner.

10)☒ The drawing(s) filed on *13 October 2004* is/are: a)☒ accepted or b)☐ objected to by the Examiner.

Applicant may not request that any objection to the drawing(s) be held in abeyance. See 37 CFR 1.85(a).

Replacement drawing sheet(s) including the correction is required if the drawing(s) is objected to. See 37 CFR 1.121(d).

11)☐ The oath or declaration is objected to by the Examiner. Note the attached Office Action or form PTO-152.

Priority under 35 U.S.C. § 119

12)☐ Acknowledgment is made of a claim for foreign priority under 35 U.S.C. § 119(a)-(d) or (f).

a)☐ All b)☐ Some * c)☐ None of:

1.☐ Certified copies of the priority documents have been received.

2.☐ Certified copies of the priority documents have been received in Application No. _____.

3.☐ Copies of the certified copies of the priority documents have been received in this National Stage application from the International Bureau (PCT Rule 17.2(a)).

* See the attached detailed Office action for a list of the certified copies not received.

Attachment(s)

1) ☒ Notice of References Cited (PTO-892)
2) ☐ Notice of Draftsperson's Patent Drawing Review (PTO-948)
3) ☐ Information Disclosure Statement(s) (PTO/SB/08) Paper No(s)/Mail Date _____.
4) ☐ Interview Summary (PTO-413) Paper No(s)/Mail Date. _____.
5) ☐ Notice of Informal Patent Application
6) ☐ Other: _____.

DETAILED ACTION

Claim Objections

1. The claims are objected to because the lines are crowded too closely together, making reading difficult. Substitute claims with lines one and one-half or double spaced on good quality paper are required. See 37 CFR 1.52(b).

Claim Rejections - 35 USC § 112

2. The following is a quotation of the second paragraph of 35 U.S.C. 112:

> The specification shall conclude with one or more claims particularly pointing out and distinctly claiming the subject matter which the applicant regards as his invention.

3. Regarding claim 17, 18, 21, 22, 23, 30, and 32, the phrase "such as" renders the claim indefinite because it is unclear whether the limitations following the phrase are part of the claimed invention. See MPEP § 2173.05(d). Where "such as" is read, it is interpreted that only one of the exemplary items is read into the limitation.

Claim Rejections - 35 USC § 102

4. The following is a quotation of the appropriate paragraphs of 35 U.S.C. 102 that form the basis for the rejections under this section made in this Office action:

> A person shall be entitled to a patent unless –
>
> (e) the invention was described in (1) an application for patent, published under section 122(b), by another filed in the United States before the invention by the applicant for patent or (2) a patent granted on an application for patent by another filed in the United States before the invention by the applicant for patent, except that an international application filed under the treaty defined in section 351(a) shall have the effects for purposes of this subsection of an application filed in the United States only if the international application designated the United States and was published under Article 21(2) of such treaty in the English language.

5. Claims 13-17 are rejected under 35 U.S.C. 102(e) as being anticipated by Kim (US 6,546,002 B1).

6. Re claim 13, Kim describes the method in the patent "System and method for implementing an intelligent and mobile menu-interface agent." The claimed inventive method relates closely to a functions and attributes associated with a user profile, which Kim describes:

Utilizing a mobile device (cellular telephone 1525) configured with input, output, and or display capabilities for communication of voice and data (Kim Fig. 15).

Utilizing a central server (profile manager 134a or 134b) (Kim Fig. 15).

Communicating between a mobile device and a central server by wired or wireless means utilizing one or more communication methods and communication protocols (via cellular telephone network 1515) (Kim Fig. 15).

Configuring the mobile device for a selected first set of functions including communication (sound/music/voice output 126), computation (application 128), command (action input 114), sense and control (voice 116 command UI input) for a selected first utility to the mobile device user (Kim Fig. 3).

Establishing one or more functional instructions for dynamic reconfiguration of the mobile device from a first set of functions to a second set of functions within the mobile device, the central server including a combination of the mobile device and the central server ((Kim Fig. 1B). Kim shows exemplary functional instructions to configure a mobile device.

Storing said functional instruction sets (functions associated with a user profile) in databases and lookup tables within the mobile device and or the central server for ease

and efficiency of execution from a first set of functions to one or more selected second set of functions of the mobile device (database dB 136) (Kim Fig. 15).

Selecting a functional instruction set for a selected reconfiguration of the mobile device from a first set of functions to a selected second set of functions in a standalone manner utilizing the mobile device and or in conjunction with utilizing the central server (login of user) (Kim Fig. 1A).

Accessing one or more said selected partial or full functional instructions or a set of functional instructions from storage, databases and lookup tables contained within the mobile device itself and/or accessing said selected partial or full functional instructions or a set of functional instructions from storage, databases and lookup tables contained within a central server by wired or wireless communication means (access/modify variables data 450) (Kim Fig. 6).

Executing the dynamic reconfiguration of the mobile device from use with a first set of functions to for use with a second set of functions utilizing the processing, storage and database capabilities of the mobile device in a standalone manner and or in conjunction with the processing, storage and database capabilities of a central server, a local server, a network server or a combination thereof (update/synch info 420) (Kim Fig. 6).

Reconfiguring the mobile device for the selected first set of functions, second set of functions and one or more other set of functions, to provide one or more selected second utility(s) to the mobile device user dynamically in real time or at the selected

time (Kim Fig. 6). This limitation is similar to changing the user profile by switching users at login or by modifying the associated settings via a profile update.

7. Re claim 14, the system is similarly rejected according to the reference material disclosed by Kim in claim 13 above.

8. Re claim 15 as applied to claim 14 above,

Means for storing a plurality of mobile device functionality instructions on the mobile device (local dB 160 in local memory 106) and or the local, central and or network server (network dB) (Kim Fig. 3).

Means for modifying and generating a plurality of new mobile device functionality instructions by means of the mobile device and or the servers (user interface input 110) (Kim Fig. 3).

Means for independently configuring the mobile device functionality in a stand alone manner and or in conjunction with a local, central or network server (add/delete entry in menu 530) (Kim Fig. 7).

Means for using the mobile device functionality instructions in the selected manner and at the selected time (scheduler 208) (Kim Fig. 4).

9. Re claim 16 as applied to claim 14 above,

Means for dynamically configuring the full or partial functionality of the mobile device by software means without altering the hardware configuration (user interface 110) (Kim Fig. 3).

Means for the functional instruction software to be resident on the mobile device (local dB 160 in local memory 106) and or on a local, central and or network server (network dB 136) (Kim Fig. 3).

Means for using the functional instruction software resident on the mobile device in a stand alone manner (MIA client 102b on cellular telephone 1525) and or in conjunction with the functional instruction software resident on the local, central and or network server (network dB 136) (Kim Fig. 15).

Means for utilizing a plurality of mobile device functionalities with the existing hardware configuration (exemplary functions displayed on a user interface) (Kim Fig. 1B).

10. Re claim 17 as applied to claim 14 above,

Means for enabling one or more specific dynamic mode configurations of the mobile device for desired utility such as a cell phone, a PDA, a remote controller, an IP phone, a music player, a voice recorder, a camera and other devices with specific utility or a combination of utilities to the user (user login) (Kim Fig. 1A).

Means for enabling and associating one or more user profiles with the selected mode configuration from one function to another function (Kim Fig. 1B). Kim depicts a

user "jokim" and the associated user profile in the GUI wherein the profile contains selectable functions.

Means for storing a plurality of mode configurations, user profiles, functional instructions, program instructions and other enabling tools on the mobile device itself (local dB 160 in local memory 106) and or the local, central and or network server (network dB 136) (Kim Fig. 3).

Means for dynamically reconfiguring and utilizing the desired mode configuration and or the desired user profile by means of the functional instructions and program instructions in conjunction with the processing power, storage, databases and lookup tables of the mobile device by itself and or in conjunction with the processing power, storage, databases and lookup tables of the local, central and or network server (user interface input 110) (Kim Fig. 3).

Means for utilizing the existing mobile device hardware for a specific function or a combination of functions for a desired utility to the mobile device user dynamically or at the selected time in conjunction with the software and functional instructions resident within the mobile device, a central server, a local server, a network server or a combination thereof (Kim Fig. 1B). Kim's user interface output 112 (Kim Fig. 3) displays an exemplary GUI similar to that in Kim Fig. 1B, which shows specific functions for a desired utility.

11. Claim 29 is rejected under 35 U.S.C. 102(e) as being anticipated by Seppanen et al. (US 5,903,832).

12. Re claim 29, Seppanen et al. discloses the mobile device communication system in the patent "Mobile terminal having enhanced system selection capability." The reference discloses:

A mobile device (mobile station 10) (Seppanen et al. Fig. 2B).

Local, central and or network servers (BS or MSC) (Seppanen et al. Fig. 2B).

Means for wired or wireless communication using public carrier communication loops (PLMN like Cellu One), private carrier communication loops (private system), office/factory communication loops (non-home systems) and home communication loops (home system), said loops operating with same or disparate communication methods and or communication parameters for wired or wireless communication in a selected environment (Seppanen et al. Fig. 23A-D).

Means for the mobile device to instantaneously recognize the communication environment and determine the nature of the public, private, office, factory, transportation or home carrier communication methods and communication parameters (AUTOMATIC MODE) (Seppanen et al. c7 10-19).

Means for selecting instantaneously and or at a desired time and switching the carrier(s) for desired communication on a desired input and output communication channel of the mobile device (AUTOMATIC NETWORK SELECTION) (Seppanen et al. c7 10-19).

Means for operation with one single mobile device in multiple carrier environments on one or more input and output channels of the mobile device (GSM, TDMA, CDMA, or AMPS) (Seppanen et al. c6 9-36).

Means for operation by the mobile device in a standalone manner and or in conjunction with a local, central and or network server (Seppanen et al. Fig. 2B). The mobile device operates in a standalone manner, without any accessory, to place a call. The mobile device also operates with a network server to connect the call.

Claim Rejections - 35 USC § 103

13. The following is a quotation of 35 U.S.C. 103(a) which forms the basis for all obviousness rejections set forth in this Office action:

> (a) A patent may not be obtained though the invention is not identically disclosed or described as set forth in section 102 of this title, if the differences between the subject matter sought to be patented and the prior art are such that the subject matter as a whole would have been obvious at the time the invention was made to a person having ordinary skill in the art to which said subject matter pertains. Patentability shall not be negatived by the manner in which the invention was made.

14. The factual inquiries set forth in *Graham* **v.** *John Deere Co.*, 383 U.S. 1, 148 USPQ 459 (1966), that are applied for establishing a background for determining obviousness under 35 U.S.C. 103(a) are summarized as follows:

1. Determining the scope and contents of the prior art.
2. Ascertaining the differences between the prior art and the claims at issue.
3. Resolving the level of ordinary skill in the pertinent art.
4. Considering objective evidence present in the application indicating obviousness or nonobviousness.

15. Claims 18-19 are rejected under 35 U.S.C. 103(a) as being unpatentable over Kim (US 6,546,002 B1) in view of La Medica, Jr. et al. (US 6,625,451 B1).

16. Re claim 18 as applied to claim 14 above, Kim teaches means for configuration, means for selecting, means for communication, means for switching, and means for

executing communication, computation, command, control and other functions in the context of a user interface associated with a user profile.

Kim, while teaching a heterogeneous/hybrid network, is not the best reference to read concerning switching between communication methods and communication protocols. In this case, La Medica, Jr. better teaches switching between communication methods (roaming profile) and communication protocols (PCS or sometimes referred to as CDMA protocol IS-95, analog, or digital).

Means for configuration of the mobile device for communication utilizing one or more communication methods and or communication protocols such as Bluetooth, Wi-Fi, IP, 802.XX, cellular, and other methods. Here, Kim teaches an IP network (LAN, MAN, WAN) and a cellular phone network (Kim c6 25-26).

Means for selecting a first communication method (home only roaming profile) and or a first communication protocol (CDMA mode in a tri-mode phone) (La Medica, Jr. Fig. 3 and c12 28-32).

Means for communication with a first communication method (home only roaming profile) and or a second communication protocol (analog mode in a tri-mode phone) (La Medica, Jr. Fig. 3 and c12 28-32).

Means for communication with a second communication method (PRL only roaming profile) and or a second communication protocol (analog mode in a tri-mode phone) (La Medica, Jr. Fig. 3 and c12 28-32).

Means for switching from a first communication method and or a first communication protocol to a second communication method and or a second

communication protocol dynamically or at the selected time (La Medica, Jr. Fig. 3). La Medica, Jr. shows a menu system that allows a user to select between different communication methods.

Means for executing communication, computation, command, control and other functions (mobile phone keypad) for a selected utility to the mobile device user utilizing one or more communication methods (roaming profile) and or communication protocols (digital, analog, CDMA) in a standalone manner leveraging the processing, storage, database and lookup tables (preferred roaming list PRL) maintained within the mobile device itself and or in conjunction with a central server, a local server, a network server or a combination thereof (La Medica, Jr. Fig. 3).

Therefore, it would have been obvious to a person having ordinary skill in the art at the time the invention was made to develop means to select, communicate, switch, and execute functions between two communication methods and/or protocols, because "A need exists for such a system that allows the customer some other options to obtain service, whenever some compatible system is available" (La Medica, Jr. c6 14-16).

17. Re claim 19 as applied to claim 18 above, La Medica, Jr. further teaches the claimed limitations:

Means for dynamically sensing a communication method and or a communication protocol (identifying the system identification number (SID) associated with a service company) (La Medica, Jr. c11 34-40).

Means for switching from a first communication method and or a first communication to said sensed second communication method and or a second communication protocol dynamically or at the selected time (La Medica, Jr. c8 36-44). La Medica, Jr. describes a selection routine for choosing a communication service based on a system identifier and a preferred roaming list.

Means for executing communications, computation, command, control and other functions seamlessly (mobile phone keypad) for a selected utility to the mobile device user utilizing one or more communication methods and or communication protocols in a standalone manner leveraging the processing, storage, database and lookup tables maintained within the mobile device itself and or in conjunction with a central server, a local server, a network server or a combination thereof (La Medica, Jr. Fig. 3).

18. Claims 20-23 and 26-27 are rejected under 35 U.S.C. 103(a) as being unpatentable over Kim (US 6,546,002 B1) in view of Harte et al. *CDMA IS-95 for Cellular and PCS*, 1999 .

19. Re claim 20 as applied to claim 14 above, Kim teaches:

A mobile device (cellular telephone 1525) configured with one or more input and output channels of communication (Kim Fig. 15).

A central server (network dB 136) (Kim Fig. 15).

Means for wired or wireless communication between a mobile device and a central server (gateway 1500) (Kim Fig. 15).

Harte is relied on to teach the remainder of the limitations:

Means for selecting and configuring one or more input and output channels of a mobile device for a selected communication and utility (Harte et al. p 75-77). Channels are selected and configured during handoff.

Means for voice communication on a selected first channel of a mobile device (Harte et al. p74). Voice is carried on the fundamental channel.

Means for data, audio, video or other communications on a selected same or different channel of a mobile device (Harte et al. p74). Data is carried on the supplemental channel.

Means for sequential or simultaneous communication on a selected communication channel by multiplexing the same channel or utilizing alternate channels (Harte et al. p69-70). Harte teaches how control information is multiplexed into voice information.

Means for a plurality of communication methods, communication types and functions on a selected channel (Harte et al. p69-70).

Means for utilizing one or more input and output channels of a mobile device for a selected function and or utility in conjunction with the capabilities of the mobile device by itself and or in conjunction with the capabilities of a central server, a local server, a network server or a combination thereof (Harte et al. p33-36). Harte describes various channels for a selected function, such as voice or control.

Therefore, it would have been obvious to a person having ordinary skill in the art at the time the invention was made to perform the features of CDMA according to Harte in combination with communication with Kim's mobile device and server, in order to

provide for "...mobile voice communication as well as many new advanced services like mobile fax and text messaging" (Harte et al. p1).

20. Re claim 21 as applied to claim 20 above, Harte further teaches:

Means for enabling the mobile device for voice and data communication on one or more selected input and output channels (Harte et al. p74). Harte describes data and voice communications on a fundamental channel and a supplemental channel.

Means for enabling the mobile device for communication of audio, video, data, broadcast and or other communication on one or more input and output channels (Harte et al. p74). Harte also teaches multimedia, data, and voice communications on the fundamental or supplemental channel.

Means for enabling dynamic reconfiguration by means of functional instructions, program instructions and or other means wherein the instructions are resident on the mobile device and or the servers (Harte et al. p77). According to Harte, the mobile device undergoes dynamic reconfiguration when performing a hard handoff between disjoint networks.

Means for dynamically or at a desired time selecting the desired communication parameters such as the frequency, power and communication protocols for reconfiguring one or more input and output channels (Harte et al. p77). New frequency assignments, frame offsets, and band classes must be selected during a hard handoff.

Means for dynamically or at a desired time altering and modifying the full or partial functionality of the mobile device in a stand alone manner using the processing

power, storage and data bases of the mobile device in a stand alone manner and or in conjunction with the processing power, storage and data bases of the local, central and or network servers (Harte et al. p2-3). When switching networks, the services and functionalities offered by that network also change, according to Harte. Service levels are different for an AMPS system and a CDMA system.

Means for altering and modifying the functionality of the desired input and output channels of the mobile device (Harte et al. p77). Because of the difference between AMPS and CDMA, the mobile device's functionality is altered when switching networks.

Means for multiplexing one or more of the input and one or more of the output channels for the desired communication, computation, command and control functions (Harte et al. p1-2). CDMA technology multiplexes communication channels, so that many users can simultaneously communicate.

Means for dynamically and or at the desired time configuring the mobile device for a plurality of interfaces for one or more types of input, output and display (Harte et al. p208-222). Examples of dynamically configuring input, output and display include: multi-language menu, voice dialing, ring options, mechanical alert, phonebook, etc.

21. Re claim 22 as applied to claim 20 above, Harte further teaches:

Means for dynamic signaling and sensing of the communication envinronment, the communication methods, communication parameters and or the functional instructions, by radio frequency signaling and or other methods (Harte et al. p69-72).

Means for enabling disparate communication methods by dynamically adjusting communication parameters such as the frequency of transmission/receiving, power levels and other parameters which are best suited to a specific environment by functional instructions or other means (Harte et al. p77). During hard handoff, disparate communication is enabled from CDMA to analog, for instance.

Means for dynamic switching of the communication parameters for transition from one communication environment and or communication method to another (Harte et al. p76). Harte teaches switching of communication parameters during soft handoff.

Means for enabling a single mobile device to perform a plurality of same or disparate functions on one or more channels (Harte et al. p76). Harte writes that "The mobile station is capable of communicating with two or more cells at the same time."

Means for a mobile device to transform itself dynamically to execute a multiplicity of desired functions, on one or more input and output channels, by utilizing the processing power and software resident in the mobile device itself and or in conjunction with the processing power and software resident on the servers (Harte et al. p218). Harte teaches software updates to fix bugs or add new features or otherwise dynamically transform the mobile device.

22. Re claim 23 as applied to claim 20 above, Harte further teaches:

Means for dynamically and independently tuning one or more input and output channels of the mobile device (Harte et al. p60-63). This limitation relates to power control in CDMA systems.

Means for dynamically and independently tuning the input and output channels based on various parameters such as power, frequency, signal to noise ration, desired and allowable error rates for data transfer and other factors (Harte et al. p60-63).

Means for dynamically optimizing the performance of the mobile device for efficient operation in the desired environment (Harte et al. Fig. 3.8). Harte teaches fine tuning the power to achieve a desired signal quality.

23. Re claim 26 as applied to claim 20 above, Harte further teaches:

Means for the mobile device to be enabled with a sleep mode and or watch dog mode on one or more input and output channels (Harte et al. p68).

Means for instantaneously switching from a sleep mode and or watch dog mode to an active mode on one or more desired input and output channels of the mobile device (Harte et al. p68, p78, and p102). Harte teaches that the mobile device will transition to an access state after being in an idle or sleep state.

Means for sensing the communication environment by the mobile device (Harte et al. p71-72). The mobile device senses the communication environment when it registers its location.

Means for the mobile device to sense other mobile devices (Harte et al. 15-19). If a first mobile device calls a second mobile device, and the second mobile device initiates a ringing action, then it satisfies the limitation that a mobile device has sensed another mobile device.

Means for the mobile device to sense using a plurality of communication methods inclusive of radio frequency and or other means (Harte et al. p75-77). Such as is the case with wireless communications, the mobile device senses other networks and their associated communication methods before performing handoff.

Means for the mobile device to sense one or more servers (Harte et al. p131). Here, the mobile device senses on or more servers (base stations).

Means for the mobile device to execute the desired communication and desired functions at the desired time and in the desired sequence (Harte et al. p87-88). During handoff, the mobile device executes desired communications and associated functions at the time of handoff.

24. Re claim 27 as applied to claim 20 above,

Means for the mobile device to operate in a wireless manner on one or more input and output channels (Harte et al. p229).

Means for the same mobile device to operate in a wired manner on one or more input and output channels (Harte et al. p104). Harte teaches a wired cable for I/O.

Means for the selection and enabling of the desired input and output channels of the mobile device for wired or wireless communication (Harte et al. p229). Harte specifies the type of modem needed to select and enable the communication.

25. Claim 24 is rejected under 35 U.S.C. 103(a) as being unpatentable over Kim (US 6,546,002 B1) in view of Harte et al. *CDMA IS-95 for Cellular and PCS*, 1999 and further in view of Sayers et al. (US 6,539,237 B1).

26. Re claim 24 as applied to claim 20 above, the claim relates to a hybrid public/private network. Kim and Harte are not the best references to show this hybrid network. Sayers, however, demonstrates an operational hybrid network:

Means for the mobile device to bypass the public carrier operating frequencies for voice and or data communication on one or more input and output channels (Sayers et al. Fig. 1).

Means for communication of voice and data using the desired home, office, factory, transportation system or other operating frequencies using the desired input and output channels of the mobile device (Sayers et al. Fig. 2).

Means for contemporaneous operation on public carrier and or private carrier frequencies on the selected input and output channels of the mobile device (Sayers et al. Fig. 1). Sayers shows a wireless handset 4 communicating on the public wireless network 15 or the private network 14. Sayers also writes that "The communication system uses normal wireless handsets or other mobile or fixed stations without need for any modifications" (Sayers et al. abstract).

Therefore, it would have been obvious to a person having ordinary skill in the art at the time the invention was made to perform the system of Sayers in order to "...provide wireless systems that are compatible with conventional cellular systems and

with corporoate networks including local area networks and the Intranet" (Sayers et al. c7 10-14).

27. Claim 25 is rejected under 35 U.S.C. 103(a) as being unpatentable over Kim (US 6,546,002 B1) in view of Harte et al. *CDMA IS-95 for Cellular and PCS*, 1999 and further in view of Chang et al. (US 6,529,491 B1).

28. Re claim 25 as applied to claim 20 above, Kim and Harte do not necessarily teach location based mobile services. Instead, Chang's reference is used to teach:

A Global Positioning Server (Chang et al.c3 30-41). Chang teaches a GPS server so that a radiotelephone may determine its location.

Means of wired or wireless communication with the GPS server (Chang et al. c3 30-41). Chang also teaches wireless communication, since the radiotelephone pertains to radio communications.

Means for determining the geographical location of the mobile device (Chang et al. c3 30-41).

Means for sensing the macro (public system) and micro (private system) communication environments in a selected environment and location wherein the mobile device is present (Chang et al. Fig. 1).

Means for dynamically selecting the desired communication methods and communication parameters on one or more input and output channels of the mobile device (Chang et al. abstract). Chang teaches that a communication method is selected during roaming procedures.

Means for enabling the desired communication on one or more input and output channels of the mobile device (Chang et al. abstract).

Therefore, it would have been obvious to a person having ordinary skill in the art at the time the invention was made to add GPS functionality to a wireless network in order to provide "...private, semiprivate, and residential system capability using a CDMA air interface. The present invention also provides tiered service capability in CDMA systems. Tiered service provides the operator with the ability to use existing networks to offer custom services to one or more subscribers based on their geographic location" (Chang et al. c2 65-4).

29. Claim 28 is rejected under 35 U.S.C. 103(a) as being unpatentable over Kim (US 6,546,002 B1) in view of Harte et al. *CDMA IS-95 for Cellular and PCS* and further in view of La Medica, Jr. et al. (US 6,625,451 B1).

30. Re claim 28 as applied to claim 20 above, Harte further teaches:

Means for enabling a selection of a plurality of communication modes on one or more input and output channels of the mobile device (Harte et al. p22-24). Harte teaches a dual-mode phone in which the mobile device is able to selectively communicate on the analog carrier or CDMA radio carrier.

Means for selecting and enabling a primary communication mode on one or more input and output channels of the mobile device (Harte et al. p198-199). The primary communication mode is selected and enabled according to a preferred roaming list (PRL).

Means for selecting and enabling a secondary communication mode on one or more input and output channels of the mobile device (Harte et al. p198-199). Likewise, a secondary communication mode is also taught in a PRL.

La Medica, Jr. teaches the finer points of a PRL and how it relates to a hierarchy of communication modes and enabling communications:

Means for enabling a hierarchy of communication modes on a mobile device for communication at a desired time and in desired order on one or more input and output channels (La Medica, Jr. c15 53-4). La Medica, Jr. better defines a PRL and states that "For systems that cover such a common geographical region, the stored PRL/SID list ranks the systems in the area. Such systems are prioritized or ranked based on desirability."

Means for instantaneously, dynamically or in a delayed manner enabling the desired communication mode on the desired input and output channel of the mobile device (La Medica, Jr. Fig. 6). The desired communication mode is enabled during a scan or when the user roams into the region defined by the PRL.

Therefore, it would have been obvious to a person having ordinary skill in the art at the time the invention was made to incorporate La Medica, Jr.'s PRL with Harte's teaching of PRL to select and enable a plurality of communication modes. This system then fulfills a need "...for such a system that allows the customer some other options to obtain service, whenever some compatible system is available" (La Medica, Jr. c6 14-16).

31. Claim 30 is rejected under 35 U.S.C. 103(a) as being unpatentable over Seppanen et al. (US 5,903,832) in view of Kim (US 6,546,002 B1).

32. Re claim 30 as applied to claim 29 above, Seppanen does not necessarily teach the following limitations. Kim's reference is used instead to teach:

Means for voice (voice 126), data (profile data 138b) and video (graphic 122 or animation 124) communication on one or more channels of the mobile device (Kim Fig. 3).

Means for maintaining a plurality of functional instructions on the mobile device and or the network servers (Kim Fig. 1B).

Means for enabling the mobile device to be configured for wired or wireless remote command and control applications such as TV, entertainment, gaming, appliance control, intelligent appliance control, intelligent sensing and control, intelligent equipment control and other control applications for the home, office, transportation systems, factory and other applications (Kim Fig. 12). Kim teaches an application being controlled by a mobile interface agent (MIA), which may reside on a mobile device such as a cellular telephone (Kim Fig. 15).

Means for a plurality of same or different control applications being enabled sequentially or contemporaneously on one or more input and output channels of the mobile device (Kim Fig. 14). Kim shows a plurality of control applications MIAs in use.

Means for enabling the control applications using the processing power, storage and databases of the mobile device itself and or in conjunction with the processing

power, storage and databases of the local, central and or network server (Kim Fig. 7). Here, Kim teaches how the control application MIA is enabled.

Therefore, it would have been obvious to a person having ordinary skill in the art at the time the invention was made to apply Kim's MIA control application to Seppanen's public/private network selection method such that "The mobile interface agent is basically an agent that allows the user to access documents, files, programs, applications, URL bookmarks, IP addresses, telephone numbers, television channels, radio stations, and other menu items from any computer that is connected to a network" (Kim c4 50-54).

33. Claim 31 is rejected under 35 U.S.C. 103(a) as being unpatentable over Seppanen et al. (US 5,903,832) in view of Kim (US 6,546,002 B1) and further in view of Hall et al. (6,356,543 B2).

34. Re claim 31 as applied to claim 29 above, Kim further teaches:

Means for voice (voice 126), data (profile data 138b) and video (graphic 122 or animation 124) communication on one or more channels of the mobile device (Kim Fig. 3).

Means for maintaining a plurality of functional instructions on the mobile device and or the network servers (Kim Fig. 1B).

Means for dynamically configuring the mobile device with a plurality of functional instructions on one or more channels (Kim Fig. 6). Kim shows how the mobile device is configured via a MIA.

Means for enabling the mobile device to emulate and perform the functions of a cordless telephone, a cellular telephone, a PDA, an Internet Protocol based IP telephone and other disparate computation, communication, command and control device functions on one or more input and output channels of the mobile device. A cordless telephone, a cellular telephone, a PDA, an IP telephone have similar function in that they can communicate with a network. Kim shows this function in that a cellular telephone communicates over a network to retrieve profile data (Kim Fig. 15).

Kim does not teach emulating a mobile device. Hall, however, teaches that limitation:

Means for enabling the emulation of the mobile device for one or more same or disparate functions (Hall et al. Fig. 1). Hall shows an emulated mobile device 26 on a computer screen.

Means for the communication, command, control and computation functions to be emulated and enabled by using the processing power/storage and databases of the mobile device by itself and or in conjunction with the processing power, storage and databases of the local, central and or network server (Hall et al. c2 64-12). Hall provides a means for emulating and enabling a mobile device on a computer for communication, command, control and computation.

Therefore, it would have been obvious to emulate a mobile device according to Hall in addition to configuring a mobile device by Kim, because "A problem encountered with the existing mobile phone systems is that users now want to decide for themselves just what services will be displayed on their mobile phones...Also, users want to be able

to customize the display of these services to meet their own special needs. As such, some users want to be able to design the 'look and feel' for their own mobile phones" (Hall et al. c1 26-35).

35. Claim 32 is rejected under 35 U.S.C. 103(a) as being unpatentable over Seppanen et al. (US 5,903,832) in view of Rabe et al. (US 5,764,730) and further in view of Rautiola et al. (US 6,853,851 B1).

36. Re claim 32 as applied to claim 29 above, Rabe teaches communication by means of a plurality of ID numbers:

Means for the mobile device to be assigned a plurality of identification numbers (Rabe et al. Fig. 3).

Means for the identification means to include a plurality of identification methods such as telephone numbers, static IP address number, dynamic IP address number and other numbers (Rabe et al. c4 1-16). The subscriber identity generally identify an associated telephone number.

Means for the mobile device to be dynamically configured for voice and data communication (Rabe et al. c8 24-31).

Means for using one or more of the telephone numbers and other identification numbers sequentially or contemporaneously on the same mobile device for desired communication (Rabe et al. Fig. 3).

Means for recognizing and relating the incoming and outgoing communications with the telephone number means and or other identification number means by visual, audible and other input, output, display and interface methods (Rabe et al. c7 43-55).

Means for communication on one or more input and output channels of the mobile device with same or disparate identification numbers and or communication methods (Rabe et al. Fig. 1).

Therefore it would have been obvious to a person having ordinary skill in the art at the time the invention was made to use ID numbers for communications, because "...there is a need for a radiotelephone having a plurality of subscriber identities and method for operating the same that overcomes the disadvantages of a radiotelephone subscriber unit having only one active subscriber identity at a time" (Rabe et al. c2 66-3).

Rabe does not necessarily teach IP communication, since Rabe's invention pertains more to non-IP communication. Rautiola teaches a mixed IP and non-IP communication network:

Means for dynamically configuring the mobile device for communication and operation using the Internet Protocol, IP, based communication methods and or non IP base communication methods, on one or more input and output channels of the mobile device, for sequential or contemporaneous use (Rautiola et al. Fig. 6 and Fig. 10). Rautiola teaches a mobile device configured for communication over IP in Fig. 10 and non-IP in Fig. 6.

Means for dynamically switching between the IP mode and non IP mode for communication on one or more input and output channels of the mobile device by software means, functional instructions or other methods (Rautiola et al. Fig. 6 and Fig. 10).

Means for dynamically enabling the communications of voice, audio, video and data in the IP mode and or non IP mode on the mobile device by utilizing software means, functional instructions means and or other methods with or without altering the hardware configuration of the mobile device (Rautiola et al. c6 10-24). The mobile device already can enable communications of multimedia data. Rautiola also teaches that the data may travel over an IP network in Fig. 10 or non-IP network in Fig. 9.

Means for enabling the operation in the IP mode and or non IP mode by using the processing power, storage and databases of the mobile device in a standalone manner and or in conjunction with the processing power, storage and databases of the local, central and or network server (Rautiola et al. abstract). Rautiola teaches an IP network and a non-IP network. The mobile device enables operation in IP or non-IP mode depending on the receiving user.

Therefore it would have been obvious to a person having ordinary skill in the art at the time the invention was made to use a mixed IP/non-IP network with multiple ID numbers in order to allow "...users to utilise communication networks, such as private intranets to carry cellular services (eg speech, data, SMS, facsimile etc) when within a coverage area. In addition, the WIO concept provides a good platform for local

multimedia extensions because it potentially offers higher bandwidth to the user" (Rautiola et al. c4 14-19).

37. Claim 33 is rejected under 35 U.S.C. 103(a) as being unpatentable over Haartsen (US 6,112,088) in view of (Stenman et al. (US 6,223,029 B1).

38. Re claim 33, Haartsen anticipates the parts of the claimed mobile communication system in the patent "Radio communications system and method for mobile assisted handover between a private network and a public mobile network." Haartsen teaches the similar system as follows:

A mobile device (mobile terminal 30) (Haartsen Fig. 3).

A central server (MSC 20) (Haartsen Fig. 3).

A network control box having one or more input and output channels located with an office, home, factory, office buildings or other locations (PBS 24) (Haartsen Fig. 3).

Means for wired or wireless communications by the network control box on one or more channels using one or more communication methods and associated communication parameters (PBS 24 connected to PBX 22 and mobile terminal 30) (Haartsen Fig. 3).

Means for selection and operation of the channels of the network box at one or more transmit and receive frequencies, power levels, signal to noise ratios (RSSI) and bandwidths (Haartsen c1 10-15).

Means for interfacing between the mobile device and the network control box by using wired or wireless communication methods in a bilateral manner and or in

conjunction the local, central and or network server (PBS 24 communicating with the mobile terminal 30) (Haartsen Fig. 3).

Means for the network control box to operate at one or more public carrier (public land mobile network PLMN), private carrier (private PBX network), office loop, home loop and other communication frequencies and modes (Haartsen abstract).

Means for the mobile device to operate in conjunction with the network box by selecting the desired communication mode and the communication loop appropriate for the intended communication on the selected input and or output channels of the mobile device and or the selected input/output channels of the network control box (handover between a private network and public network) (Haartsen abstract).

Haartsen does not teach the remaining limitations regarding remote access/control. Regardless, Stenman teaches a "Combined mobile terminal and remote control terminal":

Means for managing the operation of the network control box (local interface module 2035) by functional instructions resident within the network control box and or derived from the mobile device acting by itself and or in conjunction with functional instructions resident on a central server, a local or network server (Stenman et al. Fig. 4).

Means for the network control box input and output channels to be dynamically configured for communication in same or different communication modes (Stenman et al. c7 13-15).

Means for configuring the network control box for desired utility by the mobile device acting in a stand alone manner and or in conjunction with the local, central and or network server (Stenman et al. Fig. 4).

Therefore, it would have been obvious to a person having ordinary skill in the art at the time the invention was made to combine Stenman's remote communication control with Haartsen's hybrid network, because "It is readily apparent that a logical progression of these multifaceted advances is towards increased inter-operability and modularized integration of multiple physical devices so as to enhance human operator convenience. For example, it would be an advantage to have a mobile stantion equipped with a modular unit that is capable of communicating with a cordless phone base station so that it can operate as an extension of the cordless phone to effectuate landline communication" (Stenman et al. c2 49-57).

39. Claims 34-35 are rejected under 35 U.S.C. 103(a) as being unpatentable over Haartsen (US 6,112,088) in view of Stenman et al (US 6,223,029 B1) and further in view of Rautiola et al. (US 6,853,851 B1).

Re claim 34 as applied to claim 33 above, Haartsen further teaches:

Means for the network control box to dynamically sense a mobile device operating within range of the network control box (Haartsen Fig. 3). The network control box (PBS 24) senses the mobile device in order to perform handover.

Means for the mobile device to dynamically sense a network control box operating within range of the mobile device (Haartsen Fig. 3). Likewise, the mobile device senses the network control box (PBS 24) in order to perform handover.

Where the applicant claims dynamic switching of communication method and protocols, Rautiola is better suited to teach the art:

Means for the mobile device and the network control box to recognize, authenticate and enable communication with each other (Rautiola et al. c8 50-23). Rautiola's teaches a network control box (MS-IP Gatekeeper) that performs registration, authentication, and call control signaling.

Means for dynamic switching from a first set of communication methods and communication protocols to a second set of communication methods and communication protocols that are acceptable for the mobile device user and the network control box (Rautiola et al. Fig. 6-11).

Means for seamless and dynamic operation of the mobile device in a plurality of environments and locations for a selected utility to the mobile device user utilizing the capabilities of the mobile device and a network control box or utilizing the capabilities of the mobile device, the network control box, a central server, a local server, a network server or a combination thereof (Rautiola et al. c6 10-24).

Therefore, it would have been obvious to a person having ordinary skill in the art at the time the invention was made dynamically switch communication methods and protocols according to Rautiola in concert with Haartsen's hybrid network, because "A target of the present invention is to present a system which reduces the problems caused by overlapping networks...A further target of the invention is to present an arrangement, in which said system, integrating information transfer can also serve home office and small office users. A further target of the invention is to present an

arrangement of said kind, in which the same devices can be used as terminal devices (e.g. mobile stations) in the telecommunication system both in the office and outside it" (Rautiola et al. c2 42-53).

40. Re claim 35 as applied to claim 34 above, Haartsen further teaches:

A plurality of mobile devices (Haartsen Fig. 1).

Rautiola further teaches:

Means for a first mobile device to communicate with the network control box utilizing a first communication method and or a first communication protocols (Rautiola et al. Fig. 3).

Means for a second mobile device to communicate with the network control box utilizing a second method and or a second communication protocols (Rautiola et al. Fig. 3).

Means for the network control box to seamlessly enable communication between the first mobile device and the second mobile device utilizing same or disparate communication methods and or communication protocols (Rautiola et al. Fig. 6-11).

Means for switching and or translation including communication method translations and or protocol translations from a first communication method/protocol to a second communication method/protocol within the network control box itself and or performing said functions in conjunction with a central server, a local server, a network server or a combination thereof wherein said switching and translation instructions and

algorithms reside within the network control box and or one or more servers (Rautiola et al. Fig. 2)

Means for dynamic and seamless communication between a plurality of communication devices utilizing same or disparate communication methods and or communication protocols utilizing the capabilities of the mobile devices by themselves in conjunction with each other, in conjunction with the network control box and or in conjunction with a central server, a local server, a network server or a combination thereof (Rautiola et al. Fig. 6-11).

Conclusion

Any inquiry concerning this communication or earlier communications from the examiner should be directed to David Y. Wang whose telephone number is 571.270.1214. The examiner can normally be reached on M - F 10 AM - 4 PM EST.

If attempts to reach the examiner by telephone are unsuccessful, the examiner's supervisor, Duc Nguyen can be reached on 571.272.7503. The fax phone number for the organization where this application or proceeding is assigned is 571-273-8300.

Information regarding the status of an application may be obtained from the Patent Application Information Retrieval (PAIR) system. Status information for published applications may be obtained from either Private PAIR or Public PAIR. Status information for unpublished applications is available through Private PAIR only. For more information about the PAIR system, see http://pair-direct.uspto.gov. Should you have questions on access to the Private PAIR system, contact the Electronic Business Center (EBC) at 866-217-9197 (toll-free). If you would like assistance from a USPTO Customer Service Representative or access to the automated information system, call 800-786-9199 (IN USA OR CANADA) or 571-272-1000.

David Wang
27 April 2007

DUC M. NGUYEN
SUPERVISORY PRIMARY EXAMINER
TECHNOLOGY CENTER 2600

Notice of References Cited	Application/Control No. 10/911,211	Applicant(s)/Patent Under Reexamination RAO ET AL.	
	Examiner David Y. Wang	Art Unit 2617	Page 1 of 1

U.S. PATENT DOCUMENTS

*		Document Number Country Code-Number-Kind Code	Date MM-YYYY	Name	Classification
*	A	US-5,764,730 A	06-1998	Rabe et al.	455/403
*	B	US-5,903,832 A	05-1999	Seppanen et al.	455/435.3
*	C	US-6,112,088 A	08-2000	Haartsen, Jacobus Cornelis	455/437
*	D	US-6,223,029 B1	04-2001	Stenman et al.	455/420
*	E	US-6,356,543 B2	03-2002	Hall et al.	370/352
*	F	US-6,529,491 B1	03-2003	Chang et al.	370/335
*	G	US-6,539,237 B1	03-2003	Sayers et al.	455/555
*	H	US-6,546,002 B1	04-2003	Kim, Joseph J.	370/351
*	I	US-6,625,451 B1	09-2003	La Medica et al.	455/434
*	J	US-6,853,851 B1	02-2005	Rautiola et al.	455/553.1
	K	US-			
	L	US-			
	M	US-			

FOREIGN PATENT DOCUMENTS

*		Document Number Country Code-Number-Kind Code	Date MM-YYYY	Country	Name	Classification
	N					
	O					
	P					
	Q					
	R					
	S					
	T					

NON-PATENT DOCUMENTS

*		Include as applicable: Author, Title Date, Publisher, Edition or Volume, Pertinent Pages)
	U	Lawrence Harte, Morris Hoenig, Daniel McLaughlin, and Roman K. Kta. CDMA IS-95 for Cellular and PCS: Technology, Economics and Services. McGraw-Hill. 1999
	V	
	W	
	X	

*A copy of this reference is not being furnished with this Office action. (See MPEP § 707.05(a).)
Dates in MM-YYYY format are publication dates. Classifications may be US or foreign.

UNITED STATES PATENT AND TRADEMARK OFFICE

UNITED STATES DEPARTMENT OF COMMERCE
United States Patent and Trademark Office
Address: COMMISSIONER FOR PATENTS
P.O. Box 1450
Alexandria, Virginia 22313-1450
www.uspto.gov

Bib Data Sheet

CONFIRMATION NO. 7409

SERIAL NUMBER	FILING OR 371(c) DATE	CLASS	GROUP ART UNIT	ATTORNEY DOCKET NO.
10/911,211	10/13/2004 RULE	455	2617	IPHD.P031

APPLICANTS

Raman K. Rao, Palo Alto, CA;
Sunil K. Rao, Palo Alto, CA; .
Sanjay K. Rao, Palo Alto, CA;

** CONTINUING DATA **********

This application is a DIV of 09/591,381 06/09/2000 ABN yes DW

** FOREIGN APPLICATIONS **********

no DW

IF REQUIRED, FOREIGN FILING LICENSE GRANTED ** SMALL ENTITY **
** 03/09/2005

	STATE OR COUNTRY	SHEETS DRAWING	TOTAL CLAIMS	INDEPENDENT CLAIMS
Foreign Priority claimed ☐ yes ☒ no 35 USC 119 (a-d) conditions met ☐ yes ☒ no ☐ Met after Allowance Verified and Acknowledged Examiner's Signature DW Initials	CA	5	23	4

ADDRESS
53186

TITLE
Dynamically configurable IP based wireless device and wireless networks

FILING FEE RECEIVED		
466	FEES: Authority has been given in Paper No. _____ to charge/credit DEPOSIT ACCOUNT No. _____ for following:	☐ All Fees ☐ 1.16 Fees (Filing) ☐ 1.17 Fees (Processing Ext. of time) ☐ 1.18 Fees (Issue) ☐ Other _____ ☐ Credit

Index of Claims

Application/Control No.	Applicant(s)/Patent under Reexamination
10/911,211	RAO ET AL.
Examiner	**Art Unit**
David Y. Wang	2617

√	Rejected	–	(Through numeral) Cancelled	N	Non-Elected	A	Appeal
=	Allowed	÷	Restricted	I	Interference	O	Objected

Claim		Date
Final	Original	27apr07
	1	
	2	
	3	
	4	
	5	
	6	
	7	
	8	
	9	
	10	
	11	
	12	
	13	√
	14	√
	15	√
	16	√
	17	√
	18	√
	19	√
	20	√
	21	√
	22	√
	23	√
	24	√
	25	√
	26	√
	27	√
	28	√
	29	√
	30	√
	31	√
	32	√
	33	√
	34	√
	35	√
	36	
	37	
	38	
	39	
	40	
	41	
	42	
	43	
	44	
	45	
	46	
	47	
	48	
	49	
	50	

Claim		Date
Final	Original	
	51	
	52	
	53	
	54	
	55	
	56	
	57	
	58	
	59	
	60	
	61	
	62	
	63	
	64	
	65	
	66	
	67	
	68	
	69	
	70	
	71	
	72	
	73	
	74	
	75	
	76	
	77	
	78	
	79	
	80	
	81	
	82	
	83	
	84	
	85	
	86	
	87	
	88	
	89	
	90	
	91	
	92	
	93	
	94	
	95	
	96	
	97	
	98	
	99	
	100	

Claim		Date
Final	Original	
	101	
	102	
	103	
	104	
	105	
	106	
	107	
	108	
	109	
	110	
	111	
	112	
	113	
	114	
	115	
	116	
	117	
	118	
	119	
	120	
	121	
	122	
	123	
	124	
	125	
	126	
	127	
	128	
	129	
	130	
	131	
	132	
	133	
	134	
	135	
	136	
	137	
	138	
	139	
	140	
	141	
	142	
	143	
	144	
	145	
	146	
	147	
	148	
	149	
	150	

Search Notes

Application/Control No.	Applicant(s)/Patent under Reexamination	
10/911,211	RAO ET AL.	
Examiner	**Art Unit**	
David Y. Wang	2617	

SEARCHED			
Class	Subclass	Date	Examiner
370	335	4/27/2007	DW
370	351	4/27/2007	DW
370	352	4/27/2007	DW
379	58	4/27/2007	DW
455	434	4/27/2007	DW
455	437	4/27/2007	DW
455	420	4/27/2007	DW
455	555	4/27/2007	DW
455	553	4/27/2007	DW

INTERFERENCE SEARCHED			
Class	Subclass	Date	Examiner

SEARCH NOTES (INCLUDING SEARCH STRATEGY)		
	DATE	EXMR
please see attached	4/27/2007	DW
searched prior art references from divisional 09/591381	4/23/2007	DW

Atty. Docket No.: IPHD 631

RECEIVED
CENTRAL FAX CENTER
DEC 4 - 2007

Serial No. ~~10/991,211~~

IN THE UNITED STATES PATENT OFFICE

In Re Patent Application of:	)
	) Examiner: David Wang
Sunil K. Rao, et al.	)
	) Art Unit: 2617
Application No. ~~10/991,211~~ 10/911,211	)
	)
Filed: October 13, 2004	)
	)
For: DYNAMICALLY CONFIGURABLE WIRELESS DEVICES	)

Commissioner for Patents
P.O. Box 1450
Alexandria, VA 22313-1450

AMENDMENT AND RESPONSE UNDER 37 CFR § 1.111

Sir:

This is in response to the office action mailed May 4, 2007. Please enter the following amendments and consider the following Remarks.

Petition for Extension of Time under 37 C.F.R. § 1.136(a)

Applicants submit herewith a Petition for an Extension of time (two months) for 37 C.F.R. § 1.136(a). Applicants further submit a credit card authorization for the fee due under 37 C.F.R. § 1.17.

PAGE 5/15 * RCVD AT 12/4/2007 5:07:25 PM [Eastern Standard Time] * SVR:USPTO-EFXRF-6/38 * DNIS:2738300 * CSID:14083421909 * DURATION (mm-ss):02-32

IN THE CLAIMS:

Please amend the claims as indicated below.

Claims 1-12 (Previously canceled)

Claims 13-35 (Canceled

36. (New) In a mobile communication system, a method for configuring a mobile communication device (MD), the method comprising:

storing data on a server, the data comprising a plurality of functional instruction sets, content, and MD configuration software;

the MD remotely requesting a mode configuration of the server, wherein the server configures the MD as one or more of a plurality of intelligent devices comprising a cell phone, a remote TV controller, and a remote controller of a plurality of devices;

configuring the MD for a selected set of functions including communication, computation, command, sensing and control;

establishing the plurality of functional instructions for dynamic reconfiguration of the MD from one of the selected sets of functions to another;

alternatively accessing one of the plurality of functional instruction sets from a storage device on the MD, wherein the storage device comprises at least one lookup table;

executing a dynamic reconfiguration of the MD using one of,

the processing and storage capabilities of the MD;

the processing and storage capabilities of the server; and

processing and storage capabilities of the MD in conjunction with processing and storage capabilities of the server;

the MD downloading from the server a macro command, wherein the macro command enables the MD to control a specific intelligent device;

the MD dynamically reconfiguring to transmit and receive in a plurality of environments, comprising an office environment, a home environment, an Internet

PAGE 6/15 * RCVD AT 12/4/2007 5:07:25 PM [Eastern Standard Time] * SVR:USPTO-EFXRF-6/38 * DNIS:2738300 * CSID:14083421909 * DURATION (mm-ss):02-32

protocol (IP) environment, and a plurality of public carrier environments; and

the MD sensing an environment the MD is primarily operating in, and maintaining an ability to switch instantaneously to a different environment.

37. (New) A system for dynamically configuring a mobile communication device (MD), the system comprising:

a server comprising storage means for storing data, the data comprising a plurality of functional instruction sets, content, and MD configuration software;

at least one dynamically configurable MD communicatively coupled to the server, wherein the MD is configurable to remotely request a mode configuration of the server, wherein the server configures the MD as one or more of a plurality of intelligent devices comprising a cell phone, a remote TV controller, and a remote controller of a plurality of devices;

means for configuring the MD for a selected set of functions including communication, computation, command, sensing and control;

means for establishing the plurality of functional instructions for dynamic reconfiguration of the MD from one of the selected sets of functions to another;

means for alternatively accessing one of the plurality of functional instruction sets from a storage device on the MD, wherein the storage device comprises at least one lookup table;

means for executing a dynamic reconfiguration of the MD using one of,

the processing and storage capabilities of the MD;

the processing and storage capabilities of the server; and

processing and storage capabilities of the MD in conjunction with processing and storage capabilities of the server;

means for the MD to download from the server a macro command, wherein the macro command enables the MD to control a specific intelligent device;

means for dynamically reconfiguring the MD to transmit and receive in a plurality of environments, comprising an office environment, a home environment, an Internet protocol (IP) environment, and a plurality of public carrier environments; and

PAGE 7/15 * RCVD AT 12/4/2007 5:07:25 PM [Eastern Standard Time] * SVR:USPTO-EFXRF-6/38 * DNIS:2738300 * CSID:14083421909 * DURATION (mm-ss):02-32

means for the MD to sense an environment the MD is primarily operating in, and maintaining an ability to switch instantaneously to a different environment;

a Global Positioning System unit that allows the MD to know its exact location, wherein the exact location of the MD is used for a plurality of functions, including sensing one or more networks.

PAGE 8/15 * RCVD AT 12/4/2007 5:07:25 PM [Eastern Standard Time] * SVR:USPTO-EFXRF-6/38 * DNIS:2738300 * CSID:14083421909 * DURATION (mm-ss):02-32

REMARKS

Claims 13-35 are pending in the application. Claims 13-35 have been canceled without prejudice herein. No claims have been allowed.

Rejections under 35 U.S.C. § 112

Claims 17, 18, 21, 22, 23, 30, and 32 were rejected under 35 U.S.C. § 112, second paragraph, as being indefinite. Applicants have canceled the indicated claims and submit that the new claims do not include the objected-to language. Applicants respectfully request withdrawal of the rejections.

Rejections under 35 U.S.C. § 102

Claims 13-17 were rejected under 35 U.S.C. § 102, as being anticipated by Kim (U.S. Patent No. 6,546,002). Claims 13-17 have been canceled without prejudice. Applicants respectfully submit that new claims 36 and 37 are not anticipated by Kim.

Kim discloses a system and method for using a mobile interface agent to dynamically access programs, applications, bookmarked URLs, IP addresses, telephone numbers, television channels, radio stations, user profiles, and the like that are specific to a user via any computer type device. The mobile interface agent can be accessible using any computer from any geographical location so long as the computer can be connected to a network. The mobile interface agent is basically an agent that allows the user to access documents, files, programs, applications, URL bookmarks, IP addresses, telephone numbers, television channels, radio stations, and other menu items from any computer. Kim also relates to a per user based licensing model that allows the user to remotely access and use computer programs. (Abstract).

Referring to Figure 3 for example, the MIA 102 interfaces with three sections (user I/O section 104, local memory section 106, network section 108) of the system. The MIA 102 is used to manage, access, retrieve, etc. information from the network and local memory. The MIA 102 is also used to initiate programs, applications, URL bookmarks, and other menu items, and can be implemented by way of software, firmware, or hardware. (column 6, lines 30-37). Kim is limited to teaching this interface agent that merely facilitates access to data over a network. Kim does not teach anything regarding configuring or dynamically configuring a mobile device.

PAGE 9/15 * RCVD AT 12/4/2007 5:07:25 PM [Eastern Standard Time] * SVR:USPTO-EFXRF-6/38 * DNIS:2738300 * CSID:14083421909 * DURATION (mm-ss):02-32

Kim completely lacks any teaching or suggestion of storing data on a server, the data comprising a plurality of functional instruction sets, content, and mobile device (MD) configuration software; the MD remotely requesting a mode configuration of the server, wherein the server configures the MD as one or more of a plurality of intelligent devices comprising a cell phone, a remote TV controller, and a remote controller of a plurality of devices; configuring the MD for a selected set of functions including communication, computation, command, sensing and control, as in claim 36. Therefore, Applicants respectfully submit that claims 36 and 37 are not anticipated by Kim.

Claim 29 is rejected under 35 U.S.C. § 102, as being anticipated by Seppanen, et al. (U.S. Patent No. 5,903,832). Claim 29 has been canceled without prejudice. Applicants respectfully submit that new claims 36 and 37 are not anticipated by Seppanen. Seppanen teaches a mobile terminal having enhanced system selection capability. A mobile station (10) maintains a single, prioritized list of all available networks (i.e., all public, residential, and private networks). Access to the various networks is then based on the user's needs. A first type of access is an automatic access, that requires little or no user involvement. A second type of access is to a user-specified network. A third type of access is to a user-specified service (e.g., data, fax, e-mail, etc.) that is supported by at least one of the networks. The mobile station can search for additional networks, and can also search for additional networks that support only a specified type of service, or for a network that supports a service not supported by networks that are already in the list. All of the networks can be searched at once so that the user can readily make a selection from the single, prioritized network list. The network priorities are user programmable by moving network names up and down in the list using a mobile station user interface, such as the mobile station's keypad. The higher the network name is placed in the list, the higher is the priority of the network. (Abstract).

Seppanen is limited to teaching enhanced system selection capability and manners of organizing lists of available networks so the user can easily choose among networks. Seppanen fails to teach or disclose at least:

> the MD remotely requesting a mode configuration of the server, wherein the server configures the MD as one or more of a plurality of

PAGE 10/15 * RCVD AT 12/4/2007 5:07:25 PM [Eastern Standard Time] * SVR:USPTO-EFXRF-6/38 * DNIS:2738300 * CSID:14083421909 * DURATION (mm-ss):02-32

intelligent devices comprising a cell phone, a remote TV controller, and a remote controller of a plurality of devices;

configuring the MD for a selected set of functions including communication, computation, command, sensing and control;

establishing the plurality of functional instructions for dynamic reconfiguration of the MD from one of the selected sets of functions to another;

alternatively accessing one of the plurality of functional instruction sets from a storage device on the MD, wherein the storage device comprises at least one lookup table;

executing a dynamic reconfiguration of the MD using one of,

the processing and storage capabilities of the MD;

the processing and storage capabilities of the server; and

processing and storage capabilities of the MD in conjunction with processing and storage capabilities of the server ...

(Claim 36)

For this reason, Applicants submit that claims 36 and 37 are not anticipated by Seppanen.

Rejections under 35 U.S.C. § 103

Claims 18 and 19 were rejected under 35 U.S.C. § 103(a), as being unpatentable over Kim in view of La Medica, Jr. et al. (U.S. Patent No. 6,625,451). Claims 18 and 19 have been canceled without prejudice. Applicants respectfully submit that claims 36 and 37 would not have been obvious in view of the suggested combination. La Medica was cited for teaching switching between communications methods. However La Medica does not supply the deficiencies of Kim in that it fails to teach or suggest at least configuring the MD for a selected set of functions including communication, computation, command, sensing and control as claimed. La Medica merely allows a choice of network (e.g., Figure 3), not sets of functions for the MD. Because the proposed combination does not result in the invention of claims 36 and 37, Applicants submit that one of ordinary skill would not have been motivated to make the combination. For all of these reasons, Applicants submit that claims 36 and 37 would not have been obvious in view of the Kim and La Medica.

Claims 20-23 and 26-27 were rejected under 35 U.S.C. § 103(a), as being unpatentable over Kim in view of Harte, et al., *CDMA IS-95 for Cellular and PCS, 1999.* Claims 20-23 and 26-27 have been canceled without prejudice. Applicants respectfully

PAGE 11/15 * RCVD AT 12/4/2007 5:07:25 PM [Eastern Standard Time] * SVR:USPTO-EFXRF-6/38 * DNIS:2738300 * CSID:14083421909 * DURATION (mm-ss):02-32

submit that claims 36 and 37 would not have been obvious in view of the suggested combination. Harte was cited for teaching multiple limitations related to communication of the mobile device. However Harte does not supply the deficiencies of Kim in that it fails to teach or suggest at least configuring the MD for a selected set of functions including communication, computation, command, sensing and control as claimed. Because the proposed combination does not result in the invention of claims 36 and 37, Applicants submit that one of ordinary skill would not have been motivated to make the combination. For all of these reasons, Applicants submit that claims 36 and 37 would not have been obvious in view of the Kim and Harte.

Claim 24 was rejected under 35 U.S.C. § 103(a), as being unpatentable over Kim in view of Harte and further in view of Sayers et al. (U.S. Patent No. 6,539,237). Claim 24 has been canceled without prejudice. Applicants respectfully submit that claims 36 and 37 would not have been obvious in view of the suggested combination. Sayers does not supply the deficiencies of Kim and Harte in that it fails to teach or suggest at least configuring the MD for a selected set of functions including communication, computation, command, sensing and control as claimed. Because the proposed combination does not result in the invention of claims 36 and 37, Applicants submit that one of ordinary skill would not have been motivated to make the combination. For all of these reasons, Applicants submit that claims 36 and 37 would not have been obvious in view of the Kim, Harte, and Sayers.

Claim 25 was rejected under 35 U.S.C. § 103(a), as being unpatentable over Kim in view of Harte and further in view of Chang et al. (U.S. Patent No. 6,529,491). Claim 25 has been canceled without prejudice. Applicants respectfully submit that claims 36 and 37 would not have been obvious in view of the suggested combination. Chang was cited for including a GPS server (Claim 37 includes a reference to GPS, while claim 36 does not). However, Chang does not supply the deficiencies of Kim and Harte in that it fails to teach or suggest at least configuring the MD for a selected set of functions including communication, computation, command, sensing and control as claimed. Because the proposed combination does not result in the invention of claim 37, Applicants submit that one of ordinary skill would not have been motivated to make the

PAGE 12/15 * RCVD AT 12/4/2007 5:07:25 PM [Eastern Standard Time] * SVR:USPTO-EFXRF-6/38 * DNIS:2738300 * CSID:14083421909 * DURATION (mm-ss):02-32

combination. For all of these reasons, Applicants submit that claim 37 would not have been obvious in view of the Kim, Harte, and Chang.

Claim 28 was rejected under 35 U.S.C. § 103(a), as being unpatentable over Kim in view of Harte, and further in view of La Medica, Jr. Claim 28 has been canceled without prejudice. Applicants respectfully submit that claims 36 and 37 would not have been obvious in view of the suggested combination. Each of these references has been discussed with reference to the previous obviousness rejections. All of the references fail to teach or suggest at least configuring the MD for a selected set of functions including communication, computation, command, sensing and control as claimed. Because the proposed combination does not result in the invention of claims 36 and 37, Applicants submit that one of ordinary skill would not have been motivated to make the combination. For all of these reasons, Applicants submit that claims 36 and 37 would not have been obvious in view of the Kim, Harte, and La Medica.

Claim 30 was rejected under 35 U.S.C. § 103(a), as being unpatentable over Seppanen in view of Kim. Claim 30 has been canceled without prejudice. Applicants respectfully submit that claims 36 and 37 would not have been obvious in view of the suggested combination. The combination fails to yield the claimed invention. Each of the references fails to teach or suggest at least configuring the MD for a selected set of functions including communication, computation, command, sensing and control as claimed. Because the proposed combination does not result in the invention of claims 36 and 37, Applicants submit that one of ordinary skill would not have been motivated to make the combination. For all of these reasons, Applicants submit that claims 36 and 37 would not have been obvious in view of the Seppanen and Kim.

Claim 31 was rejected under 35 U.S.C. § 103(a), as being unpatentable over Seppanen in view of Kim and further in view of Hall et al. (U.S. Patent No. 6,356,543). Claim 31 has been canceled without prejudice. Applicants respectfully submit that claims 36 and 37 would not have been obvious in view of the suggested combination. Hall was cited for teaching emulating the mobile device. As emulation of a mobile device is not an element of the current claims, Applicants respectfully submit that this rejection is inapplicable.

PAGE 13/15 * RCVD AT 12/4/2007 5:07:25 PM [Eastern Standard Time] * SVR:USPTO-EFXRF-6/38 * DNIS:2738300 * CSID:14083421909 * DURATION (mm-ss):02-32

Claim 32 was rejected under 35 U.S.C. § 103(a), as being unpatentable over Seppanen in view of Rabe et al. (U.S. Patent No. 5,764,730) and further in view of Rautiola et al. (U.S. Patent No. 6,835,851). Claim 32 has been canceled without prejudice. Applicants respectfully submit that claims 36 and 37 would not have been obvious in view of the suggested combination. The current claims do not include limitations directed to ID numbers, identification methods, or use of one or more telephone numbers. Therefore, Applicants respectfully submit that this rejection is inapplicable.

Claim 33 was rejected under 35 U.S.C. § 103(a), as being unpatentable over Haartsen (U.S. Patent No. 6,112,088) in view of Stenman et al. (U.S. Patent No. 6,223,029). Claim 33 has been canceled without prejudice. Applicants respectfully submit that claims 36 and 37 would not have been obvious in view of the suggested combination. The combination fails to yield the claimed invention. Each of the references fails to teach or suggest at least configuring the MD for a selected set of functions including communication, computation, command, sensing and control as claimed. Because the proposed combination does not result in the invention of claims 36 and 37, Applicants submit that one of ordinary skill would not have been motivated to make the combination. For all of these reasons, Applicants submit that claims 36 and 37 would not have been obvious in view of the Haartsen and Seppanen.

Claims 34-35 were rejected under 35 U.S.C. § 103(a), as being unpatentable over Haartsen in view of Stenman, and further in view of Rautiola. Claims 34 and 35 have been canceled without prejudice. Applicants respectfully submit that claims 36 and 37 would not have been obvious in view of the suggested combination. The combination fails to yield the claimed invention. Each of the references fails to teach or suggest at least configuring the MD for a selected set of functions including communication, computation, command, sensing and control as claimed. Because the proposed combination does not result in the invention of claims 36 and 37, Applicants submit that one of ordinary skill would not have been motivated to make the combination. For all of these reasons, Applicants submit that claims 36 and 37 would not have been obvious in view of the Haartsen Stenman and Rautiola.

PAGE 14/15 * RCVD AT 12/4/2007 5:07:25 PM [Eastern Standard Time] * SVR:USPTO-EFXRF-6/38 * DNIS:2738300 * CSID:14083421909 * DURATION (mm-ss):02-32

Conclusion

Applicants respectfully submit that the claims are allowable in view of the foregoing amendments and arguments.

If in the opinion of the Examiner, a telephone conference would expedite the prosecution of this application, the Examiner is encouraged to call the undersigned at (408) 342-1900.

Respectfully submitted,
Courtney Staniford & Gregory LLP

Date: October 3, 2007

Richard L. Gregory, Jr.
Reg. No. 42,607

Tel: 408-342-1900
Fax: 408-342-1909

Courtney Staniford & Gregory LLP
P.O. Box 9686
San Jose, CA 95157

PAGE 15/15 * RCVD AT 12/4/2007 5:07:25 PM [Eastern Standard Time] * SVR:USPTO-EFXRF-6/38 * DNIS:2738300 * CSID:14083421909 * DURATION (mm-ss):02-32

RECEIVED
CENTRAL FAX CENTER
DEC 4 - 2007

Attorney Docket No. IPHD.P031 Patent

Transmittal of Response to Office Action

Certification Under 37 C.F.R. §1.8(a)

Transmitted to USPTO Central Facsimile No. December 4, 2007
Date of Transmission

571-273-8300

I hereby certify that this document, and any other accompanying documents referred to herein are being transmitted via facsimile to the United States Patent Office to the Central Facsimile number on the date indicated above.

Barbara B. Courtney
(Print Name of Person Transmitting Facsimile)

(Signature of Person Transmitting Facsimile)

Fax

To:	USPTO Art Unit 2617 Examiner: David Wang	From:	Barbara B. Courtney Courtney Staniford & Gregory LLP Phone: 408-342-1900 Fax: 408-342-1909
Fax:	571-273-8300	Pages:	15 including cover
Phone:		Date:	December 4, 2007

RE: U.S. Patent Application No. 10/911,211

The following are submitted herewith on the date indicated above:

Resubmittal of the Amendment and Response to the Office Action mailed May 4, 2007 (originally faxed to 751-273-8300 on October 3, 2007); and

Copy of official receipt confirmation.

Confidentiality Note

This facsimile transmission contains information which is confidential. If you are not the intended recipient named on this cover page, be aware that any disclosure, copying, distribution or use of this faxed information is prohibited. If you have received this facsimile in error, please notify us by telephone immediately so that we can arrange for the retrieval of the original documents at no cost to you.

PAGE 1/15 * RCVD AT 12/4/2007 5:07:25 PM [Eastern Standard Time] * SVR:USPTO-EFXRF-6/38 * DNIS:2738300 * CSID:14083421909 * DURATION (mm-ss):02-32

RECEIVED
CENTRAL FAX CENTER
DEC 4 - 2007

Atty. Docket No.: IPHD.P031 *Serial No.* 10/991,211

IN THE UNITED STATES PATENT OFFICE

In Re Patent Application of:	)
	) Examiner: David Wang
Sunil K. Rao, et al.	)
	) Art Unit: 2617
Application No. 10/991,211	)
	)
Filed: October 13, 2004	)
	)
For: DYNAMICALLY CONFIGURABLE WIRELESS DEVICES	)

Commissioner for Patents
P.O. Box 1450
Alexandria, VA 22313-1450

RESUBMITTAL OF AMENDMENT AND RESPONSE UNDER 37 CFR § 1.111

Sir:

I received a telephone call from Examiner Wang on December 4, 2007 indicating that the present application would go abandoned for failure to respond to the outstanding office action. Applicants respectfully submit that a response to the office action was timely filed on October 3, 2007, but included an incorrect serial number. The original submission, along with the official confirmation (Auto-Reply Facsimile Transmission) is included with this transmission. The incorrect serial number is lined out and corrected on the copy of the original submission submitted herewith.

PAGE 2/15 * RCVD AT 12/4/2007 5:07:25 PM [Eastern Standard Time] * SVR:USPTO-EFXRF-6/38 * DNIS:2738300 * CSID:14083421909 * DURATION (mm-ss):02-32

Atty. Docket No.: IPHD.P031 *Serial No.* 10/991,211

Applicants respectfully request that the application not be considered abandoned in consideration of the fact that the response was not matched with the file due to an error in the serial number indicated on the response.

Respectfully submitted,
Courtney Staniford & Gregory LLP

Date: December 4, 2007

Barbara B. Courtney
Reg. No. 42442

Tel: 408-342-1902
Fax: 408-342-1909

Courtney Staniford & Gregory LLP
P.O. Box 9686
San Jose, CA 95157

USPTO 10/3/2007 5:52:42 PM PAGE 1/001 Fax Server

TO:Auto-reply fax to 1408 1909 COMPANY:

Auto-Reply Facsimile Transmission

TO: Fax Sender at 14083421909

Fax Information
Date Received: 10/3/2007 5:48:07 PM [Eastern Daylight Time]
Total Pages: 14 (including cover page)

ADVISORY: This is an automatically generated return receipt confirmation of the facsimile transmission received by the Office. Please check to make sure that the number of pages listed as received in Total Pages above matches what was intended to be sent. Applicants are advised to retain this receipt in the unlikely event that proof of this facsimile transmission is necessary. Applicants are also advised to use the certificate of facsimile transmission procedures set forth in 37 CFR 1.8(a) and (b), 37 CFR 1.6(f). Trademark Applicants, also see the Trademark Manual of Examining Procedure (TMEP) section 306 et seq.

Received Cover Page ========>

10/03/2007 13:48 14083421909 CSG IP LAW PAGE 01/14

Attorney Docket No. IPHD.P031 Patent

Transmittal of Response to Office Action

Transmitted to USPTO Central Facsimile No. 571-273-8300 October 3, 2007

I hereby certify that this document, and any other accompanying document referred to herein are being transmitted via facsimile to the United States Patent Office to the Central Facsimile number on the date indicated above.

Jerry Dorriard

Fax

To: USPTO
Art Unit 2617
Examiner: David Wang

From: Richard L. Gregory, Jr.
Courtney Stanford & Gregory LLP
Phone: 408-342-1900
Fax: 408-342-1909

Fax: 571-273-8300 Pages: 14 including cover

Phone: Date: October 3, 2007

RE: U.S. Patent Application No. 10/991,211 10/911,211

The following are submitted herewith on the date indicated above:

Amendment and Response to the Office Action mailed May 4, 2007;
Petition for extension of time; and
Authorization to charge credit card.

Confidentiality Note

This facsimile transmission contains information which is confidential. If you are not the intended recipient named on this cover page, be aware that any disclosure, copying, distribution or use of this faxed information is prohibited. If you have received this facsimile in error, please notify us by telephone immediately so that we can arrange for the retrieval of the original documents at no cost to you.

PAGE 1/14 * RCVD AT 10/3/2007 5:48:07 PM [Eastern Daylight Time] * SVR:USPTO-EFXRF-6/38 * DNIS:2738300 * CSID:14083421909 * DURATION [mm-ss]:04-14

BEST AVAILABLE COPY

PTO/SB/64 (12-07)
Approved for use through 12/31/2007. OMB 0651-0031
U.S. Patent and Trademark Office; U.S. DEPARTMENT OF COMMERCE
Under the Paperwork Reduction Act of 1995, no persons are required to respond to a collection of information unless it displays a valid OMB control number.

PETITION FOR REVIVAL OF AN APPLICATION FOR PATENT ABANDONED UNINTENTIONALLY UNDER 37 CFR 1.137(b)	Docket Number (Optional) IPHD.P031

First named inventor: Raman K. Rao

Application No.: 10/911,211 Art Unit: 2617

Filed: October 13, 2004 Examiner: David Wang

Title: Dynamically Configurable Wireless Devices

Attention: Office of Petitions
Mail Stop Petition
Commissioner for Patents
P.O. Box 1450
Alexandria, VA 22313-1450
FAX (571) 273-8300

NOTE: If information or assistance is needed in completing this form, please contact Petitions Information at (571) 272-3282.

The above-identified application became abandoned for failure to file a timely and proper reply to a notice or action by the United States Patent and Trademark Office. The date of abandonment is the day after the expiration date of the period set for reply in the office notice or action plus an extensions of time actually obtained.

APPLICANT HEREBY PETITIONS FOR REVIVAL OF THIS APPLICATION

NOTE: A grantable petition requires the following items:
(1) Petition fee;
(2) Reply and/or issue fee;
(3) Terminal disclaimer with disclaimer fee - required for all utility and plant applications filed before June 8, 1995; and for all design applications; and
(4) Statement that the entire delay was unintentional.

1. Petition fee

☑ Small entity-fee $ 770.00 (37 CFR 1.17(m)). Applicant claims small entity status. See 37 CFR 1.27.

☐ Other than small entity – fee $ _____ (37 CFR 1.17(m))

2. Reply and/or fee

A. The reply and/or fee to the above-noted Office action in the form of Response under 37 CFR 1.111 (identify type of reply):

☑ has been filed previously on October 3, 2007 (with erroneous serial #).
☑ is enclosed herewith. RESUBMITTED

B. The issue fee and publication fee (if applicable) of $ _____.

☐ has been paid previously on _____.
☐ is enclosed herewith.

This collection of information is required by 37 CFR 1.137(b). The information is required to obtain or retain a benefit by the public which is to file (and by the USPTO to process) an application. Confidentiality is governed by 35 U.S.C. 122 and 37 CFR 1.11 and 1.14. This collection is estimated to take 1.0 hour to complete, including gathering, preparing, and submitting the completed application form to the USPTO. Time will vary depending upon the individual case. Any comments on the amount of time you require to complete this form and/or suggestions for reducing this burden, should be sent to the Chief Information Officer, U.S. Patent and Trademark Office, U.S. Department of Commerce, P.O. Box 1450, Alexandria, VA 22313-1450. DO NOT SEND FEES OR COMPLETED FORMS TO THIS ADDRESS. **SEND TO: Mail Stop Petition, Commissioner for Patents, P.O. Box 1450, Alexandria, VA 22313-1450.**

If you need assistance in completing the form, call 1-800-PTO-9199 and select option 2.

3. Terminal disclaimer with disclaimer fee

☑ Since this utility/plant application was filed on or after June 8, 1995, no terminal disclaimer is required.

☐ A terminal disclaimer (and disclaimer fee (37 CFR 1.20(d)) of $ _____ for a small entity or $ _____ for other than a small entity) disclaiming the required period of time is enclosed herewith (see PTO/SB/63).

4. STATEMENT: The entire delay in filing the required reply from the due date for the required reply until the filing of a grantable petition under 37 CFR 1.137(b) was unintentional. [NOTE: The United States Patent and Trademark Office may require additional information if there is a question as to whether either the abandonment or the delay in filing a petition under 37 CFR 1.137(b) was unintentional (MPEP 711.03(c), subsections (III)(C) and (D)).]

WARNING:

Petitioner/applicant is cautioned to avoid submitting personal information in documents filed in a patent application that may contribute to identity theft. Personal information such as social security numbers, bank account numbers, or credit card numbers (other than a check or credit card authorization form PTO-2038 submitted for payment purposes) is never required by the USPTO to support a petition or an application. If this type of personal information is included in documents submitted to the USPTO, petitioners/applicants should consider redacting such personal information from the documents before submitting them to the USPTO. Petitioner/applicant is advised that the record of a patent application is available to the public after publication of the application (unless a non-publication request in compliance with 37 CFR 1.213(a) is made in the application) or issuance of a patent. Furthermore, the record from an abandoned application may also be available to the public if the application is referenced in a published application or an issued patent (see 37 CFR 1.14). Checks and credit card authorization forms PTO-2038 submitted for payment purposes are not retained in the application file and therefore are not publicly available.

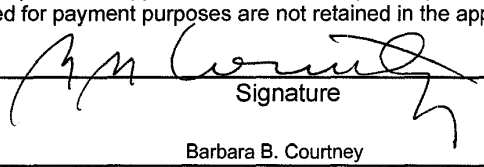

Signature

December 12, 2007
Date

Barbara B. Courtney
Typed or printed name

42,442
Registration Number, if applicable

PO Box 9686
Address

408-342-1902
Telephone Number

San Jose, CA 95157
Address

Enclosures: ☑ Fee Payment

☑ Reply

☐ Terminal Disclaimer Form

☐ Additional sheets containing statements establishing unintentional delay

☐ Other: _____

CERTIFICATE OF MAILING OR TRANSMISSION [37 CFR 1.8(a)]

I hereby certify that this correspondence is being:

☐ Deposited with the United States Postal Service on the date shown below with sufficient postage as first class mail in an envelope addressed to: Mail Stop Petition, Commissioner for Patents, P. O. Box 1450, Alexandria, VA 22313-1450.

☐ Transmitted by facsimile on the date shown below to the United States Patent and Trademark Office at (571) 273-8300.

Date

Signature

Typed or printed name of person signing certificate

IN THE UNITED STATES PATENT OFFICE

In Re Patent Application of:	)
	) Examiner: David Wang
Sunil K. Rao, et al.	)
	) Art Unit: 2617
Application No. 10/911,211	)
	)
Filed: October 13, 2004	)
	)
For: DYNAMICALLY CONFIGURABLE WIRELESS DEVICES	)

Commissioner for Patents
P.O. Box 1450
Alexandria, VA 22313-1450

AMENDMENT AND RESPONSE UNDER 37 CFR § 1.111

Sir:

This is in response to the office action mailed May 4, 2007. Please enter the following amendments and consider the following Remarks.

IN THE CLAIMS:

Please amend the claims as indicated below.

Claims 1-12 (Previously canceled)

Claims 13-35 (Canceled)

36. (New) In a mobile communication system, a method for configuring a mobile communication device (MD), the method comprising:

storing data on a server, the data comprising a plurality of functional instruction sets, content, and MD configuration software;

the MD remotely requesting a mode configuration of the server, wherein the server configures the MD as one or more of a plurality of intelligent devices comprising a cell phone, a remote TV controller, and a remote controller of a plurality of devices;

configuring the MD for a selected set of functions including communication, computation, command, sensing and control;

establishing the plurality of functional instructions for dynamic reconfiguration of the MD from one of the selected sets of functions to another;

alternatively accessing one of the plurality of functional instruction sets from a storage device on the MD, wherein the storage device comprises at least one lookup table;

executing a dynamic reconfiguration of the MD using one of,

the processing and storage capabilities of the MD;

the processing and storage capabilities of the server; and

processing and storage capabilities of the MD in conjunction with processing and storage capabilities of the server;

the MD downloading from the server a macro command, wherein the macro command enables the MD to control a specific intelligent device;

the MD dynamically reconfiguring to transmit and receive in a plurality of environments, comprising an office environment, a home environment, an Internet

protocol (IP) environment, and a plurality of public carrier environments; and

the MD sensing an environment the MD is primarily operating in, and maintaining an ability to switch instantaneously to a different environment.

37. (New) A system for dynamically configuring a mobile communication device (MD), the system comprising:

a server comprising storage means for storing data, the data comprising a plurality of functional instruction sets, content, and MD configuration software;

at least one dynamically configurable MD communicatively coupled to the server, wherein the MD is configurable to remotely request a mode configuration of the server, wherein the server configures the MD as one or more of a plurality of intelligent devices comprising a cell phone, a remote TV controller, and a remote controller of a plurality of devices;

means for configuring the MD for a selected set of functions including communication, computation, command, sensing and control;

means for establishing the plurality of functional instructions for dynamic reconfiguration of the MD from one of the selected sets of functions to another;

means for alternatively accessing one of the plurality of functional instruction sets from a storage device on the MD, wherein the storage device comprises at least one lookup table;

means for executing a dynamic reconfiguration of the MD using one of,

the processing and storage capabilities of the MD;

the processing and storage capabilities of the server; and

processing and storage capabilities of the MD in conjunction with processing and storage capabilities of the server;

means for the MD to download from the server a macro command, wherein the macro command enables the MD to control a specific intelligent device;

means for dynamically reconfiguring the MD to transmit and receive in a plurality of environments, comprising an office environment, a home environment, an Internet protocol (IP) environment, and a plurality of public carrier environments; and

means for the MD to sense an environment the MD is primarily operating in, and maintaining an ability to switch instantaneously to a different environment;

a Global Positioning System unit that allows the MD to know its exact location, wherein the exact location of the MD is used for a plurality of functions, including sensing one or more networks.

Ex.1002
APPLE INC. / Page 155 of 610

REMARKS

Claims 13-35 are pending in the application. Claims 13-35 have been canceled without prejudice herein. Claims 36 and 37 have been added herein. No claims have been allowed.

Rejections under 35 U.S.C. § 112

Claims 17, 18, 21, 22, 23, 30, and 32 were rejected under 35 U.S.C. § 112, second paragraph, as being indefinite. Applicants have canceled the indicated claims and submit that the new claims do not include the objected-to language. Applicants respectfully request withdrawal of the rejections.

Rejections under 35 U.S.C. § 102

Claims 13-17 were rejected under 35 U.S.C. § 102, as being anticipated by Kim (U.S. Patent No. 6,546,002). Claims 13-17 have been canceled without prejudice. Applicants respectfully submit that new claims 36 and 37 are not anticipated by Kim.

Kim discloses a system and method for using a mobile interface agent to dynamically access programs, applications, bookmarked URLs, IP addresses, telephone numbers, television channels, radio stations, user profiles, and the like that are specific to a user via any computer type device. The mobile interface agent can be accessible using any computer from any geographical location so long as the computer can be connected to a network. The mobile interface agent is basically an agent that allows the user to access documents, files, programs, applications, URL bookmarks, IP addresses, telephone numbers, television channels, radio stations, and other menu items from any computer. Kim also relates to a per user based licensing model that allows the user to remotely access and use computer programs. (Abstract).

Referring to Figure 3 for example, the MIA 102 interfaces with three sections (user I/O section 104, local memory section 106, network section 108) of the system. The MIA 102 is used to manage, access, retrieve, etc. information from the network and local memory. The MIA 102 is also used to initiate programs, applications, URL bookmarks, and other menu items, and can be implemented by way of software, firmware, or hardware. (column 6, lines 30-37). Kim is limited to teaching this interface agent that merely facilitates access to data over a network. Kim does not teach anything regarding

configuring or dynamically configuring a mobile device.

Kim completely lacks any teaching or suggestion of storing data on a server, the data comprising a plurality of functional instruction sets, content, and mobile device (MD) configuration software; the MD remotely requesting a mode configuration of the server, wherein the server configures the MD as one or more of a plurality of intelligent devices comprising a cell phone, a remote TV controller, and a remote controller of a plurality of devices; configuring the MD for a selected set of functions including communication, computation, command, sensing and control, as in claim 36. Therefore, Applicants respectfully submit that claims 36 and 37 are not anticipated by Kim.

Claim 29 is rejected under 35 U.S.C. § 102, as being anticipated by Seppanen, et al. (U.S. Patent No. 5,903,832). Claim 29 has been canceled without prejudice. Applicants respectfully submit that new claims 36 and 37 are not anticipated by Seppanen. Seppanen teaches a mobile terminal having enhanced system selection capability. A mobile station (10) maintains a single, prioritized list of all available networks (i.e., all public, residential, and private networks). Access to the various networks is then based on the user's needs. A first type of access is an automatic access, that requires little or no user involvement. A second type of access is to a user-specified network. A third type of access is to a user-specified service (e.g., data, fax, e-mail, etc.) that is supported by at least one of the networks. The mobile station can search for additional networks, and can also search for additional networks that support only a specified type of service, or for a network that supports a service not supported by networks that are already in the list. All of the networks can be searched at once so that the user can readily make a selection from the single, prioritized network list. The network priorities are user programmable by moving network names up and down in the list using a mobile station user interface, such as the mobile station's keypad. The higher the network name is placed in the list, the higher is the priority of the network. (Abstract).

Seppanen is limited to teaching enhanced system selection capability and manners of organizing lists of available networks so the user can easily choose among networks. Seppanen fails to teach or disclose at least:

> the MD remotely requesting a mode configuration of the server, wherein the server configures the MD as one or more of a plurality of intelligent devices comprising a cell phone, a remote TV controller, and a remote controller of a plurality of devices;
>
> configuring the MD for a selected set of functions including communication, computation, command, sensing and control;
>
> establishing the plurality of functional instructions for dynamic reconfiguration of the MD from one of the selected sets of functions to another;
>
> alternatively accessing one of the plurality of functional instruction sets from a storage device on the MD, wherein the storage device comprises at least one lookup table;
>
> executing a dynamic reconfiguration of the MD using one of,
>
> the processing and storage capabilities of the MD;
>
> the processing and storage capabilities of the server; and
>
> processing and storage capabilities of the MD in conjunction with processing and storage capabilities of the server …
>
> (Claim 36)

For this reason, Applicants submit that claims 36 and 37 are not anticipated by Seppanen.

Rejections under 35 U.S.C. § 103

Claims 18 and 19 were rejected under 35 U.S.C. § 103(a), as being unpatentable over Kim in view of La Medica, Jr. et al. (U.S. Patent No. 6,625,451). Claims 18 and 19 have been canceled without prejudice. Applicants respectfully submit that claims 36 and 37 would not have been obvious in view of the suggested combination. La Medica was cited for teaching switching between communications methods. However La Medica does not supply the deficiencies of Kim in that it fails to teach or suggest at least configuring the MD for a selected set of functions including communication, computation, command, sensing and control as claimed. La Medica merely allows a choice of network (e.g., Figure 3), not sets of functions for the MD. Because the proposed combination does not result in the invention of claims 36 and 37, Applicants submit that one of ordinary skill would not have been motivated to make the combination. For all of these reasons, Applicants submit that claims 36 and 37 would not have been obvious in view of the Kim and La Medica.

Claims 20-23 and 26-27 were rejected under 35 U.S.C. § 103(a), as being

unpatentable over Kim in view of Harte, et al., *CDMA IS-95 for Cellular and PCS, 1999.* Claims 20-23 and 26-27 have been canceled without prejudice. Applicants respectfully submit that claims 36 and 37 would not have been obvious in view of the suggested combination. Harte was cited for teaching multiple limitations related to communication of the mobile device. However Harte does not supply the deficiencies of Kim in that it fails to teach or suggest at least configuring the MD for a selected set of functions including communication, computation, command, sensing and control as claimed. Because the proposed combination does not result in the invention of claims 36 and 37, Applicants submit that one of ordinary skill would not have been motivated to make the combination. For all of these reasons, Applicants submit that claims 36 and 37 would not have been obvious in view of the Kim and Harte.

Claim 24 was rejected under 35 U.S.C. § 103(a), as being unpatentable over Kim in view of Harte and further in view of Sayers et al. (U.S. Patent No. 6,539,237). Claim 24 has been canceled without prejudice. Applicants respectfully submit that claims 36 and 37 would not have been obvious in view of the suggested combination. Sayers does not supply the deficiencies of Kim and Harte in that it fails to teach or suggest at least configuring the MD for a selected set of functions including communication, computation, command, sensing and control as claimed. Because the proposed combination does not result in the invention of claims 36 and 37, Applicants submit that one of ordinary skill would not have been motivated to make the combination. For all of these reasons, Applicants submit that claims 36 and 37 would not have been obvious in view of the Kim, Harte, and Sayers.

Claim 25 was rejected under 35 U.S.C. § 103(a), as being unpatentable over Kim in view of Harte and further in view of Chang et al. (U.S. Patent No. 6,529,491). Claim 25 has been canceled without prejudice. Applicants respectfully submit that claims 36 and 37 would not have been obvious in view of the suggested combination. Chang was cited for including a GPS server (Claim 37 includes a reference to GPS, while claim 36 does not). However, Chang does not supply the deficiencies of Kim and Harte in that it fails to teach or suggest at least configuring the MD for a selected set of functions including communication, computation, command, sensing and control as claimed.

Because the proposed combination does not result in the invention of claim 37, Applicants submit that one of ordinary skill would not have been motivated to make the combination. For all of these reasons, Applicants submit that claim 37 would not have been obvious in view of the Kim, Harte, and Chang.

Claim 28 was rejected under 35 U.S.C. § 103(a), as being unpatentable over Kim in view of Harte, and further in view of La Medica, Jr. Claim 28 has been canceled without prejudice. Applicants respectfully submit that claims 36 and 37 would not have been obvious in view of the suggested combination. Each of these references has been discussed with reference to the previous obviousness rejections. All of the references fail to teach or suggest at least configuring the MD for a selected set of functions including communication, computation, command, sensing and control as claimed. Because the proposed combination does not result in the invention of claims 36 and 37, Applicants submit that one of ordinary skill would not have been motivated to make the combination. For all of these reasons, Applicants submit that claims 36 and 37 would not have been obvious in view of the Kim, Harte, and La Medica.

Claim 30 was rejected under 35 U.S.C. § 103(a), as being unpatentable over Seppanen in view of Kim. Claim 30 has been canceled without prejudice. Applicants respectfully submit that claims 36 and 37 would not have been obvious in view of the suggested combination. The combination fails to yield the claimed invention. Each of the references fails to teach or suggest at least configuring the MD for a selected set of functions including communication, computation, command, sensing and control as claimed. Because the proposed combination does not result in the invention of claims 36 and 37, Applicants submit that one of ordinary skill would not have been motivated to make the combination. For all of these reasons, Applicants submit that claims 36 and 37 would not have been obvious in view of the Seppanen and Kim.

Claim 31 was rejected under 35 U.S.C. § 103(a), as being unpatentable over Seppanen in view of Kim and further in view of Hall et al. (U.S. Patent No. 6,356,543). Claim 31 has been canceled without prejudice. Applicants respectfully submit that claims 36 and 37 would not have been obvious in view of the suggested combination. Hall was cited for teaching emulating the mobile device. As emulation of a mobile

device is not an element of the current claims, Applicants respectfully submit that this rejection is inapplicable.

Claim 32 was rejected under 35 U.S.C. § 103(a), as being unpatentable over Seppanen in view of Rabe et al. (U.S. Patent No. 5,764,730) and further in view of Rautiola et al. (U.S. Patent No. 6,835,851). Claim 32 has been canceled without prejudice. Applicants respectfully submit that claims 36 and 37 would not have been obvious in view of the suggested combination. The current claims do not include limitations directed to ID numbers, identification methods, or use of one or more telephone numbers. Therefore, Applicants respectfully submit that this rejection is inapplicable.

Claim 33 was rejected under 35 U.S.C. § 103(a), as being unpatentable over Haartsen (U.S. Patent No. 6,112,088) in view of Stenman et al. (U.S. Patent No. 6,223,029). Claim 33 has been canceled without prejudice. Applicants respectfully submit that claims 36 and 37 would not have been obvious in view of the suggested combination. The combination fails to yield the claimed invention. Each of the references fails to teach or suggest at least configuring the MD for a selected set of functions including communication, computation, command, sensing and control as claimed. Because the proposed combination does not result in the invention of claims 36 and 37, Applicants submit that one of ordinary skill would not have been motivated to make the combination. For all of these reasons, Applicants submit that claims 36 and 37 would not have been obvious in view of the Haartsen and Seppanen.

Claims 34-35 were rejected under 35 U.S.C. § 103(a), as being unpatentable over Haartsen in view of Stenman, and further in view of Rautiola. Claims 34 and 35 have been canceled without prejudice. Applicants respectfully submit that claims 36 and 37 would not have been obvious in view of the suggested combination. The combination fails to yield the claimed invention. Each of the references fails to teach or suggest at least configuring the MD for a selected set of functions including communication, computation, command, sensing and control as claimed. Because the proposed combination does not result in the invention of claims 36 and 37, Applicants submit that one of ordinary skill would not have been motivated to make the combination. For all of

these reasons, Applicants submit that claims 36 and 37 would not have been obvious in view of the Haartsen Stenman and Rautiola.

Conclusion

Applicants respectfully submit that the claims are allowable in view of the foregoing amendments and arguments.

If in the opinion of the Examiner, a telephone conference would expedite the prosecution of this application, the Examiner is encouraged to call the undersigned at (408) 342-1900.

Respectfully submitted,
Courtney Staniford & Gregory LLP

Date: December 12, 2007

Barbara B. Courtney
Reg. No. 42,442

Tel: 408-342-1900
Fax: 408-342-1909

Courtney Staniford & Gregory LLP
P.O. Box 9686
San Jose, CA 95157

Electronic Patent Application Fee Transmittal

Application Number:	10911211
Filing Date:	13-Oct-2004
Title of Invention:	Dynamically configurable IP based wireless device and wireless networks
First Named Inventor/Applicant Name:	Raman K. Rao
Filer:	Barbara B. Courtney/Jerry Donnard
Attorney Docket Number:	IPHD.P031
Filed as Small Entity	

Utility Filing Fees

Description	Fee Code	Quantity	Amount	Sub-Total in USD($)
Basic Filing:				
Pages:				
Claims:				
Miscellaneous-Filing:				
Petition:				
Petition-revive unintent. abandoned appl	2453	1	770	770
Patent-Appeals-and-Interference:				
Post-Allowance-and-Post-Issuance:				
Extension-of-Time:				

Description	Fee Code	Quantity	Amount	Sub-Total in USD($)
Miscellaneous:				
		Total in USD ($)		**770**

Electronic Acknowledgement Receipt

EFS ID:	2582711
Application Number:	10911211
International Application Number:	
Confirmation Number:	7409
Title of Invention:	Dynamically configurable IP based wireless device and wireless networks
First Named Inventor/Applicant Name:	Raman K. Rao
Customer Number:	53186
Filer:	Barbara B. Courtney/Jerry Donnard
Filer Authorized By:	Barbara B. Courtney
Attorney Docket Number:	IPHD.P031
Receipt Date:	12-DEC-2007
Filing Date:	13-OCT-2004
Time Stamp:	18:34:12
Application Type:	Utility under 35 USC 111(a)

Payment information:

Submitted with Payment	yes
Payment Type	Credit Card
Payment was successfully received in RAM	$770
RAM confirmation Number	3480
Deposit Account	
Authorized User	

File Listing:

Document Number	Document Description	File Name	File Size(Bytes) /Message Digest	Multi Part /.zip	Pages (if appl.)

1		Petition_To_Revive_IPHDP031.pdf	1304673 521b01d0ec1e763ac157a44d36b706a1cdcfa034	yes	14

Multipart Description/PDF files in .zip description		
Document Description	**Start**	**End**
Miscellaneous Incoming Letter	1	1
Petition for review by the Office of Petitions.	2	3
Amendment - After Non-Final Rejection	4	14

Warnings:

Information:

2	Fee Worksheet (PTO-06)	fee-info.pdf	8177 af8952dbc763ac754b3af3cb83b5f8ec0e3d54cd	no	2

Warnings:

Information:

Total Files Size (in bytes):	1312850

This Acknowledgement Receipt evidences receipt on the noted date by the USPTO of the indicated documents, characterized by the applicant, and including page counts, where applicable. It serves as evidence of receipt similar to a Post Card, as described in MPEP 503.

New Applications Under 35 U.S.C. 111
If a new application is being filed and the application includes the necessary components for a filing date (see 37 CFR 1.53(b)-(d) and MPEP 506), a Filing Receipt (37 CFR 1.54) will be issued in due course and the date shown on this Acknowledgement Receipt will establish the filing date of the application.

National Stage of an International Application under 35 U.S.C. 371
If a timely submission to enter the national stage of an international application is compliant with the conditions of 35 U.S.C. 371 and other applicable requirements a Form PCT/DO/EO/903 indicating acceptance of the application as a national stage submission under 35 U.S.C. 371 will be issued in addition to the Filing Receipt, in due course.

New International Application Filed with the USPTO as a Receiving Office
If a new international application is being filed and the international application includes the necessary components for an international filing date (see PCT Article 11 and MPEP 1810), a Notification of the International Application Number and of the International Filing Date (Form PCT/RO/105) will be issued in due course, subject to prescriptions concerning national security, and the date shown on this Acknowledgement Receipt will establish the international filing date of the application.

Attorney Docket No. IPHD.P031 Patent

Transmittal of Documents

Certification Under 37 C.F.R §1.8(a)

December 12, 2007
Date of Transmission

Transmitted via

USPTO EFS

I hereby certify that this document, and any other accompanying documents referred to herein are being transmitted to the United States Patent Office via EFS in accordance with 37 C.F.R. §1.6(a)(4) on the date indicated above.

Jerry Donnard
(Print Name of Person Transmitting Documents)

(Signature of Person Transmitting Documents)

Petition for Revival of an Application for Patent Abandoned Unintentionally Under 37 C.F.R. §1.137(b);
Amendment and Response Under 37 C.F.R. §1.116(b);
Electronic payment of filing fee.

PTO/SB/06 (07-06)
Approved for use through 1/31/2007. OMB 0651-0032
U.S. Patent and Trademark Office; U.S. DEPARTMENT OF COMMERCE
Under the Paperwork Reduction Act of 1995, no persons are required to respond to a collection of information unless it displays a valid OMB control number.

PATENT APPLICATION FEE DETERMINATION RECORD

Substitute for Form PTO-875

Application or Docket Number	Filing Date	☐ To be Mailed
10/911,211	10/13/2004	

APPLICATION AS FILED – PART I

	(Column 1)	(Column 2)	SMALL ENTITY ☒		OR	OTHER THAN SMALL ENTITY	
FOR	NUMBER FILED	NUMBER EXTRA	RATE ($)	FEE ($)		RATE ($)	FEE ($)
☐ BASIC FEE (37 CFR 1.16(a), (b), or (c))	N/A	N/A	N/A			N/A	
☐ SEARCH FEE (37 CFR 1.16(k), (i), or (m))	N/A	N/A	N/A			N/A	
☐ EXAMINATION FEE (37 CFR 1.16(o), (p), or (q))	N/A	N/A	N/A			N/A	
TOTAL CLAIMS (37 CFR 1.16(i))	minus 20 =	*	X $ =		OR	X $ =	
INDEPENDENT CLAIMS (37 CFR 1.16(h))	minus 3 =	*	X $ =			X $ =	
☐ APPLICATION SIZE FEE (37 CFR 1.16(s))	If the specification and drawings exceed 100 sheets of paper, the application size fee due is $250 ($125 for small entity) for each additional 50 sheets or fraction thereof. See 35 U.S.C. 41(a)(1)(G) and 37 CFR 1.16(s).						
☐ MULTIPLE DEPENDENT CLAIM PRESENT (37 CFR 1.16(j))							
* If the difference in column 1 is less than zero, enter "0" in column 2.			TOTAL			TOTAL	

APPLICATION AS AMENDED – PART II

AMENDMENT 12/04/2007	(Column 1) CLAIMS REMAINING AFTER AMENDMENT		(Column 2) HIGHEST NUMBER PREVIOUSLY PAID FOR	(Column 3) PRESENT EXTRA	SMALL ENTITY RATE ($)	ADDITIONAL FEE ($)	OR	OTHER THAN SMALL ENTITY RATE ($)	ADDITIONAL FEE ($)
Total (37 CFR 1.16(i))	* 2	Minus	** 23	= 0	X $25 =	0	OR	X $ =	
Independent (37 CFR 1.16(h))	* 2	Minus	***4	= 0	X $105 =	0	OR	X $ =	
☐ Application Size Fee (37 CFR 1.16(s))									
☐ FIRST PRESENTATION OF MULTIPLE DEPENDENT CLAIM (37 CFR 1.16(j))							OR		
					TOTAL ADD'L FEE	0	OR	TOTAL ADD'L FEE	

AMENDMENT 12/12/2007	(Column 1) CLAIMS REMAINING AFTER AMENDMENT		(Column 2) HIGHEST NUMBER PREVIOUSLY PAID FOR	(Column 3) PRESENT EXTRA	RATE ($)	ADDITIONAL FEE ($)		RATE ($)	ADDITIONAL FEE ($)
Total (37 CFR 1.16(i))	* 2	Minus	** 23	= 0	X $25 =	0	OR	X $ =	
Independent (37 CFR 1.16(h))	* 2	Minus	*** 4	= 0	X $105 =	0	OR	X $ =	
☐ Application Size Fee (37 CFR 1.16(s))									
☐ FIRST PRESENTATION OF MULTIPLE DEPENDENT CLAIM (37 CFR 1.16(j))							OR		
					TOTAL ADD'L FEE	0	OR	TOTAL ADD'L FEE	

* If the entry in column 1 is less than the entry in column 2, write "0" in column 3.

** If the "Highest Number Previously Paid For" IN THIS SPACE is less than 20, enter "20".

*** If the "Highest Number Previously Paid For" IN THIS SPACE is less than 3, enter "3".

The "Highest Number Previously Paid For" (Total or Independent) is the highest number found in the appropriate box in column 1.

Legal Instrument Examiner:
shirell m. carmichael

This collection of information is required by 37 CFR 1.16. The information is required to obtain or retain a benefit by the public which is to file (and by the USPTO to process) an application. Confidentiality is governed by 35 U.S.C. 122 and 37 CFR 1.14. This collection is estimated to take 12 minutes to complete, including gathering, preparing, and submitting the completed application form to the USPTO. Time will vary depending upon the individual case. Any comments on the amount of time you require to complete this form and/or suggestions for reducing this burden, should be sent to the Chief Information Officer, U.S. Patent and Trademark Office, U.S. Department of Commerce, P.O. Box 1450, Alexandria, VA 22313-1450. DO NOT SEND FEES OR COMPLETED FORMS TO THIS ADDRESS. **SEND TO: Commissioner for Patents, P.O. Box 1450, Alexandria, VA 22313-1450.**

If you need assistance in completing the form, call 1-800-PTO-9199 and select option 2.

UNITED STATES PATENT AND TRADEMARK OFFICE

Commissioner for Patents
United States Patent and Trademark Office
P.O. Box 1450
Alexandria, VA 22313-1450
www.uspto.gov
DW Jan-08

COURTNEY STANIFORD & GREGORY LLP
P.O. BOX 9686
SAN JOSE CA 95157

COPY MAILED

JAN 17 2008

OFFICE OF PETITIONS

In re Application of	:	
Rao et al.	:	
Application Number: 10/911211	:	DECISION ON PETITION
Filing Date: 10/13/2004	:	
Attorney Docket Number:	:	
IPHD.P031	:	

This is a decision on the petition filed on December 12, 2007, under 37 CFR 1.137(b),[1] to revive the above-identified application.

The petition is **GRANTED**.

The application became abandoned on August 5, 2007, for failure to file a response to the non-final Office action mailed on May 4, 2007, which set a three (3) month shortened statutory period for reply. No extensions of the time for reply in accordance with 37 CFR 1.136(a) were obtained. The filing of the present petition precedes the mailing of Notice of Abandonment.

Receipt of the amendment filed in response to the non-final Office action is acknowledged.

---

[1] Effective December 1, 1997, the provisions of 37 CFR 1.137(b) now provide that where the delay in reply was unintentional, a petition may be filed to revive an abandoned application or a lapsed patent pursuant to 37 CFR 1.137(b). A grantable petition filed under the provisions of 37 CFR 1.137(b) must be accompanied by:

(1) the required reply, unless previously filed. In a nonprovisional application abandoned for failure to prosecute, the required reply may be met by the filing of a continuing application. In a nonprovisional utility or plant application filed on or after June 8, 1995, and abandoned for failure to prosecute, the required reply may also be met by the filing of a request for continuing examination in compliance with § 1.114. In an application or patent, abandoned or lapsed for failure to pay the issue fee or any portion thereof, the required reply must be the payment of the issue fee or any outstanding balance thereof. In an application abandoned for failure to pay the publication fee, the required reply must include payment of the publication fee.

(2) the petition fee as set forth in 37 CFR 1.17(m);

(3) a statement that the entire delay in filing the required reply from the due date for the reply until the filing of a grantable petition pursuant to 37 CFR 1.137(b) was unintentional. The Commissioner may required additional information where there is a question whether the delay was unintentional; and

(4) any terminal disclaimer (and fee as set forth in 37 CFR 1.20(d)) required pursuant to 37 CFR 1.137(c)).

The application is being referred to Technology Center Art Unit 2617 for further processing.

Telephone inquiries concerning this matter may be directed to the undersigned at (571)272-3231.

Douglas I. Wood
Senior Petitions Attorney
Office of Petitions

UNITED STATES PATENT AND TRADEMARK OFFICE

UNITED STATES DEPARTMENT OF COMMERCE
United States Patent and Trademark Office
Address: COMMISSIONER FOR PATENTS
P.O. Box 1450
Alexandria, Virginia 22313-1450
www.uspto.gov

APPLICATION NO.	FILING DATE	FIRST NAMED INVENTOR	ATTORNEY DOCKET NO.	CONFIRMATION NO.
10/911,211	10/13/2004	Raman K. Rao	IPHD.P031	7409

53186 7590 03/24/2008
COURTNEY STANIFORD & GREGORY LLP
P.O. BOX 9686
SAN JOSE, CA 95157

EXAMINER	
WANG, DAVID	
ART UNIT	PAPER NUMBER
2617	
MAIL DATE	DELIVERY MODE
03/24/2008	PAPER

Please find below and/or attached an Office communication concerning this application or proceeding.

The time period for reply, if any, is set in the attached communication.

Office Action Summary	Application No.	Applicant(s)	
	10/911,211	RAO ET AL.	
	Examiner	Art Unit	
	DAVID WANG	2617	

-- The MAILING DATE of this communication appears on the cover sheet with the correspondence address --

Period for Reply

A SHORTENED STATUTORY PERIOD FOR REPLY IS SET TO EXPIRE 3 MONTH(S) OR THIRTY (30) DAYS, WHICHEVER IS LONGER, FROM THE MAILING DATE OF THIS COMMUNICATION.

- Extensions of time may be available under the provisions of 37 CFR 1.136(a). In no event, however, may a reply be timely filed after SIX (6) MONTHS from the mailing date of this communication.
- If NO period for reply is specified above, the maximum statutory period will apply and will expire SIX (6) MONTHS from the mailing date of this communication.
- Failure to reply within the set or extended period for reply will, by statute, cause the application to become ABANDONED (35 U.S.C. § 133). Any reply received by the Office later than three months after the mailing date of this communication, even if timely filed, may reduce any earned patent term adjustment. See 37 CFR 1.704(b).

Status

1)☒ Responsive to communication(s) filed on *04 December 2007*.

2a)☒ This action is **FINAL**. 2b)☐ This action is non-final.

3)☐ Since this application is in condition for allowance except for formal matters, prosecution as to the merits is closed in accordance with the practice under *Ex parte Quayle*, 1935 C.D. 11, 453 O.G. 213.

Disposition of Claims

4)☒ Claim(s) *1-37* is/are pending in the application.

4a) Of the above claim(s) *1-35* is/are withdrawn from consideration.

5)☐ Claim(s) _____ is/are allowed.

6)☒ Claim(s) *36-37* is/are rejected.

7)☐ Claim(s) _____ is/are objected to.

8)☐ Claim(s) _____ are subject to restriction and/or election requirement.

Application Papers

9)☐ The specification is objected to by the Examiner.

10)☐ The drawing(s) filed on _____ is/are: a)☐ accepted or b)☐ objected to by the Examiner.

Applicant may not request that any objection to the drawing(s) be held in abeyance. See 37 CFR 1.85(a).

Replacement drawing sheet(s) including the correction is required if the drawing(s) is objected to. See 37 CFR 1.121(d).

11)☐ The oath or declaration is objected to by the Examiner. Note the attached Office Action or form PTO-152.

Priority under 35 U.S.C. § 119

12)☐ Acknowledgment is made of a claim for foreign priority under 35 U.S.C. § 119(a)-(d) or (f).

a)☐ All b)☐ Some * c)☐ None of:

1.☐ Certified copies of the priority documents have been received.

2.☐ Certified copies of the priority documents have been received in Application No. _____.

3.☐ Copies of the certified copies of the priority documents have been received in this National Stage application from the International Bureau (PCT Rule 17.2(a)).

* See the attached detailed Office action for a list of the certified copies not received.

Attachment(s)

1) ☒ Notice of References Cited (PTO-892)
2) ☐ Notice of Draftsperson's Patent Drawing Review (PTO-948)
3) ☐ Information Disclosure Statement(s) (PTO/SB/08) Paper No(s)/Mail Date _____.
4) ☐ Interview Summary (PTO-413) Paper No(s)/Mail Date. _____ .
5) ☐ Notice of Informal Patent Application
6) ☐ Other: _____.

FINAL REJECTION

Response to Amendment

Claim Rejections - 35 USC § 103

1. The following is a quotation of 35 U.S.C. 103(a) which forms the basis for all obviousness rejections set forth in this Office action:

> (a) A patent may not be obtained though the invention is not identically disclosed or described as set forth in section 102 of this title, if the differences between the subject matter sought to be patented and the prior art are such that the subject matter as a whole would have been obvious at the time the invention was made to a person having ordinary skill in the art to which said subject matter pertains. Patentability shall not be negatived by the manner in which the invention was made.

2. The factual inquiries set forth in *Graham* **v.** *John Deere Co.*, 383 U.S. 1, 148 USPQ 459 (1966), that are applied for establishing a background for determining obviousness under 35 U.S.C. 103(a) are summarized as follows:

1. Determining the scope and contents of the prior art.
2. Ascertaining the differences between the prior art and the claims at issue.
3. Resolving the level of ordinary skill in the pertinent art.
4. Considering objective evidence present in the application indicating obviousness or nonobviousness.

3. Claim 36 is rejected under 35 U.S.C. 103(a) as being unpatentable over Kim et al. (US 6,546,002 B1) in view of Tate et al. (US 6,493,751 B1).

4. Re claim 36, Kim teaches:

Storing data on a server (dB 136, Kim et al. Fig. 15), the data comprising a plurality of functional instruction sets, content, and MD configuration software (Profile Data 138a, Kim et al. Fig. 15);

The MD remotely requesting a mode configuration of the server (requesting a profile via Profile Manager 134a, Kim et al. Fig. 15), wherein the server configures the MD as one or more of a plurality of intelligent devices comprising a cell phone (cellular

telephone 1525, Kim et al. Fig. 15), a remote TV controller, and a remote controller of a plurality of devices;

Configuring the MD for a selected set of functions including communication (user identification 170 for communication, Kim et al. Fig. 3), computation (output 122, 124, 126, 128, 130, Kim et al. Fig. 3), command (user interface input 110, Kim et al. Fig. 3), sensing and control (input events 118, 120, Kim et al. Fig. 3);

Although Kim teaches reconfiguration of a menu-interface (Kim et al. abstract) to remotely access another computer, Kim may not pictorially teach dynamic reconfiguration. Instead, Tate better teaches dynamic reconfiguration, even preferable to an environment:

Establishing the plurality of functional instructions for dynamic reconfiguration of the MD from one of the selected sets of functions to another (selecting a different mobile configuration, Tate et al. Fig. 3);

Therefore, it would have been obvious to a person having ordinary skill in the art at the time the invention was made to dynamically reconfigure a device so as to avoid "…cumbersome and nonintuitive reconfiguration by a user" (Tate et al. c4 14-21). Tate further teaches:

Alternatively accessing one of the plurality of functional instruction sets from a storage device on the MD (local registry storage, Tate et al. c8 25-49), wherein the storage device comprises at least one lookup table (tables in mobile configurations, Tate et al. Fig. 3);

Executing a dynamic reconfiguration of the MD using one of,

The processing and storage capabilities of the MD (user creating a profile on the device, Tate et al. c4 35-49);

The processing and storage capabilities of the server; and

Processing and storage capabilities of the MD in conjunction with processing and storage capabilities of the server;

The MD downloading from the server a macro command, wherein the macro command enables the MD to control a specific intelligent device (importing a mobile configuration, Tate et al. c4 50-64);

The MD dynamically reconfiguring to transmit and receive in a plurality of environments, comprising an office environment (office in Lake City in mobile configuration #2, Tate et al. Fig. 3), a home environment (working from home in mobile configuration #1, Tate et al. Fig. 3), an Internet protocol (IP) environment, and a plurality of public carrier environments; and

The MD sensing an environment the MD is primarily operating in (via location profile info 64, Tate et al. Fig. 4), and maintaining an ability to switch instantaneously to a different environment (switching between modem and LAN mobile configurations, Tate et al. Fig. 3).

5. Claim 37 is rejected under 35 U.S.C. 103(a) as being unpatentable over Kim et al. (US 6,546,002 B1) in view of Tate et al. (US 6,493,751 B1) and further in view of Watts et al. (US 6,119,186).

6. Re claim 37, Kim teaches:

A server comprising storage means for storing data (dB 136, Kim et al. Fig. 15), the data comprising a plurality of functional instruction sets, content, and MD configuration software (Profile Data 138a, Kim et al. Fig. 15);

At least one dynamically configurable MD communicatively coupled to the server, wherein the MD is configurable to remotely request a mode configuration of the server (requesting a profile via Profile Manager 134a, Kim et al. Fig. 15), wherein the server configures the MD as one or more of a plurality of intelligent devices comprising a cell phone cellular telephone 1525, Kim et al. Fig. 15), a remote TV controller, and a remote controller of a plurality of devices;

Means for configuring the MD for a selected set of functions including communication (user identification 170 for communication, Kim et al. Fig. 3), computation (output 122, 124, 126, 128, 130, Kim et al. Fig. 3), command (user interface input 110, Kim et al. Fig. 3), sensing and control (input events 118, 120, Kim et al. Fig. 3);

Although Kim teaches reconfiguration of a menu-interface (Kim et al. abstract) to remotely access another computer, Kim may not pictorially teach dynamic reconfiguration. Instead, Tate better teaches dynamic reconfiguration, even preferable to an environment:

Means for establishing the plurality of functional instructions for dynamic reconfiguration of the MD from one of the selected sets of functions to another (selecting a different mobile configuration, Tate et al. Fig. 3);

Therefore, it would have been obvious to a person having ordinary skill in the art at the time the invention was made to dynamically reconfigure a device so as to avoid "…cumbersome and nonintuitive reconfiguration by a user" (Tate et al. c4 14-21). Tate further teaches:

Means for alternatively accessing on of the plurality of functional instruction sets from a storage device on the MD (local registry storage, Tate et al. c8 25-49), wherein the storage device comprises at least one lookup table (tables in mobile configurations, Tate et al. Fig. 3);

Means for executing a dynamic reconfiguration of the MD using one of,

The processing and storage capabilities of the MD (user creating a profile on the device, Tate et al. c4 35-49);

The processing and storage capabilities of the server; and

Processing and storage capabilities of the MD in conjunction with processing and storage capabilities of the server;

Means for the MD to download from the server a macro command, wherein the macro command enables the MD to control a specific intelligent device (importing a mobile configuration, Tate et al. c4 50-64);

Means for dynamically reconfiguring the MD to transmit and receive in a plurality of environments, comprising an office environment (office in Lake City in mobile configuration #2, Tate et al. Fig. 3), a home environment (working from home in mobile configuration #1, Tate et al. Fig. 3), an Internet protocol (IP) environment, and a plurality of public carrier environments; and

Means for the MD to sense an environment the MD is primarily operating in (via location profile info 64, Tate et al. Fig. 4), and maintaining an ability to switch instantaneously to a different environment (switching between modem and LAN mobile configurations, Tate et al. Fig. 3);

The prior art teaches location based reconfiguration, but does not specifically mention GPS. However, Watts teaches the use of GPS for detecting and responding to changing environmental conditions such that:

A Global Positioning System unit that allows the MD to know its exact location, wherein the exact location of the MD is used for a plurality of functions, including sensing one or more networks (GPS, Watts et al. c4 14-41).

Therefore, it would have been obvious to a person having ordinary skill in the art at the time the invention was made to use GPS to determine location to provide a computer "...which detects changes in an environment associated with the computer, determines an optimum configuration based on the new environment and modifies the configuration of the computer based on the optimum configuration" (Watts et al. c2 11-16).

Response to Arguments

7. Applicant's arguments with respect to claims 36, 37 have been considered but are moot in view of the new ground(s) of rejection.

Conclusion

8. Applicant's amendment necessitated the new ground(s) of rejection presented in this Office action. Accordingly, **THIS ACTION IS MADE FINAL**. See MPEP § 706.07(a). Applicant is reminded of the extension of time policy as set forth in 37 CFR 1.136(a).

A shortened statutory period for reply to this final action is set to expire THREE MONTHS from the mailing date of this action. In the event a first reply is filed within TWO MONTHS of the mailing date of this final action and the advisory action is not mailed until after the end of the THREE-MONTH shortened statutory period, then the shortened statutory period will expire on the date the advisory action is mailed, and any extension fee pursuant to 37 CFR 1.136(a) will be calculated from the mailing date of the advisory action. In no event, however, will the statutory period for reply expire later than SIX MONTHS from the date of this final action.

Any inquiry concerning this communication or earlier communications from the examiner should be directed to DAVID WANG whose telephone number is (571)270-1214. The examiner can normally be reached on M - F 10 AM - 4 PM EST.

If attempts to reach the examiner by telephone are unsuccessful, the examiner's supervisor, Duc Nguyen can be reached on 571.272.7503. The fax phone number for the organization where this application or proceeding is assigned is 571-273-8300.

Information regarding the status of an application may be obtained from the Patent Application Information Retrieval (PAIR) system. Status information for published applications may be obtained from either Private PAIR or Public PAIR. Status information for unpublished applications is available through Private PAIR only. For more information about the PAIR system, see http://pair-direct.uspto.gov. Should you have questions on access to the Private PAIR system, contact the Electronic Business Center (EBC) at 866-217-9197 (toll-free). If you would like assistance from a USPTO Customer Service Representative or access to the automated information system, call 800-786-9199 (IN USA OR CANADA) or 571-272-1000.

David Wang
14 March 2008

/Duc Nguyen/
Supervisory Patent Examiner, Art Unit 2617

Notice of References Cited	Application/Control No. 10/911,211	Applicant(s)/Patent Under Reexamination RAO ET AL.	
	Examiner DAVID WANG	Art Unit 2617	Page 1 of 1

U.S. PATENT DOCUMENTS

*		Document Number Country Code-Number-Kind Code	Date MM-YYYY	Name	Classification
*	A	US-6,119,186 A	09-2000	Watts et al.	710/104
*	B	US-6,493,751 B1	12-2002	Tate et al.	709/221
	C	US-			
	D	US-			
	E	US-			
	F	US-			
	G	US-			
	H	US-			
	I	US-			
	J	US-			
	K	US-			
	L	US-			
	M	US-			

FOREIGN PATENT DOCUMENTS

*		Document Number Country Code-Number-Kind Code	Date MM-YYYY	Country	Name	Classification
	N					
	O					
	P					
	Q					
	R					
	S					
	T					

NON-PATENT DOCUMENTS

*		Include as applicable: Author, Title Date, Publisher, Edition or Volume, Pertinent Pages)
	U	
	V	
	W	
	X	

*A copy of this reference is not being furnished with this Office action. (See MPEP § 707.05(a).)
Dates in MM-YYYY format are publication dates. Classifications may be US or foreign.

Index of Claims	Application/Control No.	Applicant(s)/Patent Under Reexamination
	10911211	RAO ET AL.
	Examiner	Art Unit
	DAVID WANG	2617

✓	Rejected	-	Cancelled	N	Non-Elected	A	Appeal
=	Allowed	÷	Restricted	I	Interference	O	Objected

☐ Claims renumbered in the same order as presented by applicant ☐ CPA ☐ T.D. ☐ R.1.47

CLAIM		DATE								
Final	Original	03/14/2008								
	1	-								
	2	-								
	3	-								
	4	-								
	5	-								
	6	-								
	7	-								
	8	-								
	9	-								
	10	-								
	11	-								
	12	-								
	13	-								
	14	-								
	15	-								
	16	-								
	17	-								
	18	-								
	19	-								
	20	-								
	21	-								
	22	-								
	23	-								
	24	-								
	25	-								
	26	-								
	27	-								
	28	-								
	29	-								
	30	-								
	31	-								
	32	-								
	33	-								
	34	-								
	35	-								
	36	✓								

Index of Claims	Application/Control No.	Applicant(s)/Patent Under Reexamination
	10911211	RAO ET AL.
	Examiner	Art Unit
	DAVID WANG	2617

✓	Rejected	-	Cancelled	N	Non-Elected	A	Appeal
=	Allowed	÷	Restricted	I	Interference	O	Objected

☐ Claims renumbered in the same order as presented by applicant ☐ CPA ☐ T.D. ☐ R.1.47

CLAIM		DATE								
Final	Original	03/14/2008								
	37	✓								

Search Notes	Application/Control No.	Applicant(s)/Patent Under Reexamination
	10911211	RAO ET AL.
	Examiner	Art Unit
	DAVID WANG	2617

SEARCHED			
Class	Subclass	Date	Examiner
455	461	3/14/2008	DW
709	221	3/14/2008	DW
710	104	3/14/2008	DW

SEARCH NOTES		
Search Notes	Date	Examiner
please see attached	3/14/2008	DW
consulted Duc Nguyen SPE regarding the use of the Logitech Harmony remote controller	3/11/2008	DW

INTERFERENCE SEARCH			
Class	Subclass	Date	Examiner

EAST Search History

Ref #	Hits	Search Query	DBs	Default Operator	Plurals	Time Stamp
S1	998	(configur$6 re$1configur$6) near5 (office home) near5 (location environment setting profile)	US-PGPUB; USPAT; FPRS; EPO; JPO; IBM_TDB	OR	ON	2008/03/14 10:44
S2	487	S1 and ("370".clas. "455". clas. "709".clas.)	US-PGPUB; USPAT; FPRS; EPO; JPO; IBM_TDB	OR	ON	2008/03/14 10:44
S3	56	S1 and (look$1up near5 (table list memory cache))	US-PGPUB; USPAT; FPRS; EPO; JPO; IBM_TDB	OR	ON	2008/03/14 10:45
S4	30	S2 and S3	US-PGPUB; USPAT; FPRS; EPO; JPO; IBM_TDB	OR	ON	2008/03/14 10:45
S5	12	(configur$6 re$1configur$6) near5 (sens$4) near5 (office home) near5 (location environment setting profile)	US-PGPUB; USPAT; FPRS; EPO; JPO; IBM_TDB	OR	ON	2008/03/14 10:47
S6	367	S1 and (@pd<"20000609" @ad<"20000609" @rlad<"20000609")	US-PGPUB; USPAT; FPRS; EPO; JPO; IBM_TDB	OR	ON	2008/03/14 10:49
S7	199	S2 and S6	US-PGPUB; USPAT; FPRS; EPO; JPO; IBM_TDB	OR	ON	2008/03/14 10:49
S8	332	(configur$6 re$1configur$6) same sens$4 same (office home) near5 (location environment setting profile)	US-PGPUB; USPAT; FPRS; EPO; JPO; IBM_TDB	OR	ON	2008/03/14 10:50
S9	83	S8 and (@pd<"20000609" @ad<"20000609" @rlad<"20000609")	US-PGPUB; USPAT; FPRS; EPO; JPO; IBM_TDB	OR	ON	2008/03/14 10:50
S10	61	S8 and ("370".clas. "455". clas. "709".clas.)	US-PGPUB; USPAT; FPRS; EPO; JPO; IBM_TDB	OR	ON	2008/03/14 10:51
S11	20	S9 and S10	US-PGPUB; USPAT; FPRS; EPO; JPO; IBM_TDB	OR	ON	2008/03/14 10:51

S12	63	S9 not S11	US-PGPUB; USPAT; FPRS; EPO; JPO; IBM_TDB	OR	ON	2008/03/14 10:54
S13	191	(configur$6 re$1configur$6 chang$4 switch$4) near5 (profile setting config configuration) near5 (office home) near5 (location position environment)	US-PGPUB; USPAT; FPRS; EPO; JPO; IBM_TDB	OR	ON	2008/03/14 11:10
S14	105	S13 and (@pd<"20000609" @ad<"20000609" @rlad<"20000609")	US-PGPUB; USPAT; FPRS; EPO; JPO; IBM_TDB	OR	ON	2008/03/14 11:11
S15	83	S13 and ("370".clas. "455". clas. "709".clas.)	US-PGPUB; USPAT; FPRS; EPO; JPO; IBM_TDB	OR	ON	2008/03/14 11:11
S16	29	S14 and S15	US-PGPUB; USPAT; FPRS; EPO; JPO; IBM_TDB	OR	ON	2008/03/14 11:11
S17	76	S14 not S16	US-PGPUB; USPAT; FPRS; EPO; JPO; IBM_TDB	OR	ON	2008/03/14 11:15
S18	498	455/461.ccls.	US-PGPUB; USPAT; FPRS; EPO; JPO; IBM_TDB	OR	ON	2008/03/14 12:48
S19	91	S18 and (configur$6 re $1configur$6 chang$4 switch $4) same (profile setting config configuration) same (office home)	US-PGPUB; USPAT; FPRS; EPO; JPO; IBM_TDB	OR	ON	2008/03/14 13:01
S20	10	S18 and (configur$6 re $1configur$6 chang$4 switch $4) near5 (profile setting config configuration) near5 (office home)	US-PGPUB; USPAT; FPRS; EPO; JPO; IBM_TDB	OR	ON	2008/03/14 13:01
S21	269	S18 and (@pd<"20000609" @ad<"20000609" @rlad<"20000609")	US-PGPUB; USPAT; FPRS; EPO; JPO; IBM_TDB	OR	ON	2008/03/14 13:02
S22	57	S19 and S21	US-PGPUB; USPAT; FPRS; EPO; JPO; IBM_TDB	OR	ON	2008/03/14 13:02

S23	2	"6493751".pn. "6961762".pn.	US-PGPUB; USPAT; FPRS; EPO; JPO; IBM_TDB	OR	ON	2008/03/14 15:28

3/16/2008 6:28:22 PM
C:\Documents and Settings\dwang\My Documents\EAST\Workspaces\10911211 v2.wsp

UNITED STATES PATENT AND TRADEMARK OFFICE

UNITED STATES DEPARTMENT OF COMMERCE
United States Patent and Trademark Office
Address: COMMISSIONER FOR PATENTS
P.O. Box 1450
Alexandria, Virginia 22313-1450
www.uspto.gov

APPLICATION NO.	FILING DATE	FIRST NAMED INVENTOR	ATTORNEY DOCKET NO.	CONFIRMATION NO.
10/911,211	10/13/2004	Raman K. Rao	IPHD.P031	7409

53186 7590 12/19/2008
COURTNEY STANIFORD & GREGORY LLP
P.O. BOX 9686
SAN JOSE, CA 95157

EXAMINER	
WANG, DAVID	
ART UNIT	PAPER NUMBER
2617	

MAIL DATE	DELIVERY MODE
12/19/2008	PAPER

Please find below and/or attached an Office communication concerning this application or proceeding.

The time period for reply, if any, is set in the attached communication.

Notice of Abandonment	Application No.	Applicant(s)	
	10/911,211	RAO ET AL.	
	Examiner	Art Unit	
	DAVID WANG	2617	

-- The MAILING DATE of this communication appears on the cover sheet with the correspondence address--

This application is abandoned in view of:

1. ☒ Applicant's failure to timely file a proper reply to the Office letter mailed on *24 March 2008*.
   (a) ☐ A reply was received on _____ (with a Certificate of Mailing or Transmission dated _____), which is after the expiration of the period for reply (including a total extension of time of _____ month(s)) which expired on _____.
   (b) ☐ A proposed reply was received on _____, but it does not constitute a proper reply under 37 CFR 1.113 (a) to the final rejection.
   (A proper reply under 37 CFR 1.113 to a final rejection consists only of: (1) a timely filed amendment which places the application in condition for allowance; (2) a timely filed Notice of Appeal (with appeal fee); or (3) a timely filed Request for Continued Examination (RCE) in compliance with 37 CFR 1.114).
   (c) ☐ A reply was received on _____ but it does not constitute a proper reply, or a bona fide attempt at a proper reply, to the non-final rejection. See 37 CFR 1.85(a) and 1.111. (See explanation in box 7 below).
   (d) ☒ No reply has been received.

2. ☐ Applicant's failure to timely pay the required issue fee and publication fee, if applicable, within the statutory period of three months from the mailing date of the Notice of Allowance (PTOL-85).
   (a) ☐ The issue fee and publication fee, if applicable, was received on _____ (with a Certificate of Mailing or Transmission dated _____), which is after the expiration of the statutory period for payment of the issue fee (and publication fee) set in the Notice of Allowance (PTOL-85).
   (b) ☐ The submitted fee of $_____ is insufficient. A balance of $_____ is due.
   The issue fee required by 37 CFR 1.18 is $_____. The publication fee, if required by 37 CFR 1.18(d), is $_____.
   (c) ☐ The issue fee and publication fee, if applicable, has not been received.

3. ☐ Applicant's failure to timely file corrected drawings as required by, and within the three-month period set in, the Notice of Allowability (PTO-37).
   (a) ☐ Proposed corrected drawings were received on _____ (with a Certificate of Mailing or Transmission dated _____), which is after the expiration of the period for reply.
   (b) ☐ No corrected drawings have been received.

4. ☐ The letter of express abandonment which is signed by the attorney or agent of record, the assignee of the entire interest, or all of the applicants.

5. ☐ The letter of express abandonment which is signed by an attorney or agent (acting in a representative capacity under 37 CFR 1.34(a)) upon the filing of a continuing application.

6. ☐ The decision by the Board of Patent Appeals and Interference rendered on _____ and because the period for seeking court review of the decision has expired and there are no allowed claims.

7. ☒ The reason(s) below:

Han Le (chugach) contacted attorney Barbara Courtney handling the application on 28 October 2008 and verified that no response has been submitted.

/Alexander Eisen/
Supervisory Patent Examiner, Art Unit 2617

Petitions to revive under 37 CFR 1.137(a) or (b), or requests to withdraw the holding of abandonment under 37 CFR 1.181, should be promptly filed to minimize any negative effects on patent term.

Doc Code: PET.POA.WDRW
Document Description: Petition to withdraw attorney or agent (SB83)

PTO/SB/83 (11-08)
Approved for use through 11/30/2011. OMB 0651-0035
U.S. Patent and Trademark Office, U.S. DEPARTMENT OF COMMERCE
Under the Paperwork Reduction Act of 1995, no persons are required to respond to a collection of information unless it displays a valid OMB control number.

REQUEST FOR WITHDRAWAL AS ATTORNEY OR AGENT AND CHANGE OF CORRESPONDENCE ADDRESS

Application Number	10/911,211
Filing Date	October 13, 2004
First Named Inventor	Raman K. Rao
Art Unit	2617
Examiner Name	Wang, David
Attorney Docket Number	IPHD.P031

To: Commissioner for Patents
P.O. Box 1450
Alexandria, VA 22313-1450

Please withdraw me as attorney or agent for the above identified patent application, and

- ☐ all the practitioners of record;
- ☐ the practitioners (with registration numbers) of record listed on the attached paper(s); or
- ☑ the practitioners of record associated with Customer Number: 53186

NOTE: The immediately preceding box should only be marked when the practitioners were appointed using the listed Customer Number.

The reason(s) for this request are those described in 37 CFR :

☐ 10.40(b)(1)	☐ 10.40(b)(2)	☐ 10.40(b)(3)	☑ 10.40(b)(4)
☐ 10.40(c)(1)(i)	☐ 10.40(c)(1)(ii)	☐ 10.40(c)(1)(iii)	☐ 10.40(c)(1)(iv)
☐ 10.40(c)(1)(v)	☐ 10.40(c)(1)(vi)	☐ 10.40(c)(2)	☐ 10.40(c)(3)
☐ 10.40(c)(4)	☐ 10.40(c)(5)	☐ 10.40(c)(6) Please explain below:	

Certifications

Check each box below that is factually correct. WARNING: If a box is left unchecked, the request will likely not be approved.

1. ☑ I/We have given reasonable notice to the client, prior to the expiration of the response period, that the practitioner(s) intend to withdraw from employment.

2. ☑ I/We have delivered to the client or a duly authorized representative of the client all papers and property (including funds) to which the client is entitled.

3. ☑ I/We have notified the client of any responses that may be due and the time frame within which the client must respond.

Please provide an explanation, if necessary:

This collection of information is required by 37 CFR 1.36. The information is required to obtain or retain a benefit by the public which is to file (and by the USPTO to process) an application. Confidentiality is governed by 35 U.S.C. 122 and 37 CFR 1.11 and 1.14. This collection is estimated to take 12 minutes to complete, including gathering, preparing, and submitting the completed application form to the USPTO. Time will vary depending upon the individual case. Any comments on the amount of time you require to complete this form and/or suggestions for reducing this burden, should be sent to the Chief Information Officer, U.S. Patent and Trademark Office, U.S. Department of Commerce, P.O. Box 1450, Alexandria, VA 22313-1450. DO NOT SEND FEES OR COMPLETED FORMS TO THIS ADDRESS. **SEND TO: Commissioner for Patents, P.O. Box 1450, Alexandria, VA 22313-1450.**

If you need assistance in completing the form, call 1-800-PTO-9199 and select option 2.

PTO/SB/83 (11-08)
Approved for use through 11/30/2011. OMB 0651-0035
U.S. Patent and Trademark Office, U.S. DEPARTMENT OF COMMERCE
Under the Paperwork Reduction Act of 1995, no persons are required to respond to a collection of information unless it displays a valid OMB control number.

REQUEST FOR WITHDRAWAL AS ATTORNEY OR AGENT AND CHANGE OF CORRESPONDENCE ADDRESS

Complete the following section only when the correspondence address will change. *Changes of address will only be accepted to an inventor or an assignee that has properly made itself of record pursuant to 37 CFR 3.71.*

Change the correspondence address and direct all future correspondence to:

A. ☐ The address of the inventor or assignee associated with Customer Number: _____

OR

B. ☑ Inventor or Assignee name	IP Holdings, Inc.			
Address 3099 Alexis Drive				
City Palo Alto	State CA	Zip 94304	Country US	
Telephone 650-906-3755	Email			

I am authorized to sign on behalf of myself and all withdrawing practitioners.

Signature	/Richard L. Gregory, Jr./		
Name	Richard L. Gregory, Jr.	Registration No. 42,607	
Address PO Box 9686			
City San Jose	State CA	Zip 95157	Country US
Date July 22, 2009	Telephone No. 408-342-1900		

NOTE: ***Withdrawal is effective when approved rather than when received.***

This collection of information is required by 37 CFR 1.36. The information is required to obtain or retain a benefit by the public which is to file (and by the USPTO to process) an application. Confidentiality is governed by 35 U.S.C. 122 and 37 CFR 1.11 and 1.14. This collection is estimated to take 12 minutes to complete, including gathering, preparing, and submitting the completed application form to the USPTO. Time will vary depending upon the individual case. Any comments on the amount of time you require to complete this form and/or suggestions for reducing this burden, should be sent to the Chief Information Officer, U.S. Patent and Trademark Office, U.S. Department of Commerce, P.O. Box 1450, Alexandria, VA 22313-1450. DO NOT SEND FEES OR COMPLETED FORMS TO THIS ADDRESS. **SEND TO: Commissioner for Patents, P.O. Box 1450, Alexandria, VA 22313-1450.**

If you need assistance in completing the form, call 1-800-PTO-9199 and select option 2.

Electronic Acknowledgement Receipt

EFS ID:	5752985
Application Number:	10911211
International Application Number:	
Confirmation Number:	7409
Title of Invention:	Dynamically configurable IP based wireless device and wireless networks
First Named Inventor/Applicant Name:	Raman K. Rao
Customer Number:	53186
Filer:	Richard L. Gregory/Jerry Donnard
Filer Authorized By:	Richard L. Gregory
Attorney Docket Number:	IPHD.P031
Receipt Date:	22-JUL-2009
Filing Date:	13-OCT-2004
Time Stamp:	20:25:12
Application Type:	Utility under 35 USC 111(a)

Payment information:

Submitted with Payment	no

File Listing:

Document Number	Document Description	File Name	File Size(Bytes)/ Message Digest	Multi Part /.zip	Pages (if appl.)
1	Petition to withdraw attorney or agent (SB83)	Withdrawal_IPHDP031.pdf	222253 65b70bef8e5c455ec1786d7c673c148d592e8c1e	no	2

Warnings:

Information:

Total Files Size (in bytes):	222253

This Acknowledgement Receipt evidences receipt on the noted date by the USPTO of the indicated documents, characterized by the applicant, and including page counts, where applicable. It serves as evidence of receipt similar to a Post Card, as described in MPEP 503.

New Applications Under 35 U.S.C. 111
If a new application is being filed and the application includes the necessary components for a filing date (see 37 CFR 1.53(b)-(d) and MPEP 506), a Filing Receipt (37 CFR 1.54) will be issued in due course and the date shown on this Acknowledgement Receipt will establish the filing date of the application.

National Stage of an International Application under 35 U.S.C. 371
If a timely submission to enter the national stage of an international application is compliant with the conditions of 35 U.S.C. 371 and other applicable requirements a Form PCT/DO/EO/903 indicating acceptance of the application as a national stage submission under 35 U.S.C. 371 will be issued in addition to the Filing Receipt, in due course.

New International Application Filed with the USPTO as a Receiving Office
If a new international application is being filed and the international application includes the necessary components for an international filing date (see PCT Article 11 and MPEP 1810), a Notification of the International Application Number and of the International Filing Date (Form PCT/RO/105) will be issued in due course, subject to prescriptions concerning national security, and the date shown on this Acknowledgement Receipt will establish the international filing date of the application.

IN THE UNITED STATES PATENT AND TRADEMARK OFFICE

APPLICANT(S):	Raman K. Rao, et al.
TITLE:	Dynamically Configurable IP Based Wireless Device and Wireless Networks
SERIAL NO.:	10/911,211
FILING DATE:	October 13, 2004
ATTY.DKT.NO.:	PA5118US

COMMISSIONER FOR PATENTS
PO BOX 1450
ALEXANDRIA, VA 22313-1450

REVOCATION AND POWER OF ATTORNEY

I, the undersigned, **Rekha Rao, Chief Executive Officer** of **IP Holdings, Inc.**, the assignee of the entire right, title and interest in the above-referenced United States patent application, am authorized to act and sign on behalf of the assignee and hereby revoke all prior powers of attorney previously submitted in the above-referenced U.S. patent application and hereby appoint the agents and attorneys associated with **Customer Number 22830** to prosecute this application and to transact all business in the U.S. Patent and Trademark Office connected therewith.

Please direct all communication relative to this patent to the following correspondence address:

Customer Number 22830
CARR & FERRELL *LLP*
2200 Geng Road
Palo Alto, CA 94303
TEL: 650.812.3400
FAX: 650.812.3444

Respectfully submitted,

Date: 12/14/09

Rekha K. Rao

Rekha Rao
Chief Executive Officer
IP Holdings, Inc.

PTO/SB/96 (07-09)
Approved for use through 07/31/2012. OMB 0651-0031
U.S. Patent and Trademark Office; U.S. DEPARTMENT OF COMMERCE
Under the Paperwork Reduction Act of 1995, no persons are required to respond to a collection of information unless it displays a valid OMB control number.

STATEMENT UNDER 37 CFR 3.73(b)

Applicant/Patent Owner: Raman K. Rao, et al.

Application No./Patent No.: 10/911,211 Filed/Issue Date: October 13, 2004

Titled: Dynamically Configurable IP Based Wireless Device and Wireless Networks

IP Holdings, Inc. (Name of Assignee), a corporation (Type of Assignee, e.g., corporation, partnership, university, government agency, etc.)

states that it is:

1. [X] the assignee of the entire right, title, and interest in;

2. [ ] an assignee of less than the entire right, title, and interest in (The extent (by percentage) of its ownership interest is _____ %); or

3. [ ] the assignee of an undivided interest in the entirety of (a complete assignment from one of the joint inventors was made) the patent application/patent identified above, by virtue of either:

A. [X] An assignment from the inventor(s) of the patent application/patent identified above. The assignment was recorded in the United States Patent and Trademark Office at Reel 021102, Frame 0992, or for which a copy therefore is attached.

OR

B. [ ] A chain of title from the inventor(s), of the patent application/patent identified above, to the current assignee as follows:

1. From: _____ To: _____
   The document was recorded in the United States Patent and Trademark Office at
   Reel _____, Frame _____, or for which a copy thereof is attached.

2. From: _____ To: _____
   The document was recorded in the United States Patent and Trademark Office at
   Reel _____, Frame _____, or for which a copy thereof is attached.

3. From: _____ To: _____
   The document was recorded in the United States Patent and Trademark Office at
   Reel _____, Frame _____, or for which a copy thereof is attached.

[ ] Additional documents in the chain of title are listed on a supplemental sheet(s).

[ ] As required by 37 CFR 3.73(b)(1)(i), the documentary evidence of the chain of title from the original owner to the assignee was, or concurrently is being, submitted for recordation pursuant to 37 CFR 3.11.

[NOTE: A separate copy (*i.e.*, a true copy of the original assignment document(s)) must be submitted to Assignment Division in accordance with 37 CFR Part 3, to record the assignment in the records of the USPTO. See MPEP 302.08]

The undersigned (whose title is supplied below) is authorized to act on behalf of the assignee.

Rekha K. Rao — Signature

12/14/09 — Date

Rekha Rao — Printed or Typed Name

Chief Executive Officer — Title

This collection of information is required by 37 CFR 3.73(b). The information is required to obtain or retain a benefit by the public which is to file (and by the USPTO to process) an application. Confidentiality is governed by 35 U.S.C. 122 and 37 CFR 1.11 and 1.14. This collection is estimated to take 12 minutes to complete, including gathering, preparing, and submitting the completed application form to the USPTO. Time will vary depending upon the individual case. Any comments on the amount of time you require to complete this form and/or suggestions for reducing this burden, should be sent to the Chief Information Officer, U.S. Patent and Trademark Office, U.S. Department of Commerce, P.O. Box 1450, Alexandria, VA 22313-1450. DO NOT SEND FEES OR COMPLETED FORMS TO THIS ADDRESS. **SEND TO: Commissioner for Patents, P.O. Box 1450, Alexandria, VA 22313-1450.**

If you need assistance in completing the form, call 1-800-PTO-9199 and select option 2.

Electronic Acknowledgement Receipt

EFS ID:	6699704
Application Number:	10911211
International Application Number:	
Confirmation Number:	7409
Title of Invention:	Dynamically configurable IP based wireless device and wireless networks
First Named Inventor/Applicant Name:	Raman K. Rao
Customer Number:	53186
Filer:	Breton Geoffrey Graham
Filer Authorized By:	
Attorney Docket Number:	IPHD.P031
Receipt Date:	23-DEC-2009
Filing Date:	13-OCT-2004
Time Stamp:	18:27:33
Application Type:	Utility under 35 USC 111(a)

Payment information:

Submitted with Payment	no

File Listing:

Document Number	Document Description	File Name	File Size(Bytes)/ Message Digest	Multi Part /.zip	Pages (if appl.)
1	Power of Attorney	PA5118US_Revocation_POA.pdf	846030 cbbb9a4c89fdf7dff0686f110dec95fd03f09477	no	1

Warnings:	
Information:	

2	Assignee showing of ownership per 37 CFR 3.73(b).	PA5118US_3-73b_Statement.pdf	1497904 9666fcfb80bdb96899aa9d98cfe9322dac3fe219	no	1

Warnings:	
Information:	
Total Files Size (in bytes):	2343934

This Acknowledgement Receipt evidences receipt on the noted date by the USPTO of the indicated documents, characterized by the applicant, and including page counts, where applicable. It serves as evidence of receipt similar to a Post Card, as described in MPEP 503.

New Applications Under 35 U.S.C. 111
If a new application is being filed and the application includes the necessary components for a filing date (see 37 CFR 1.53(b)-(d) and MPEP 506), a Filing Receipt (37 CFR 1.54) will be issued in due course and the date shown on this Acknowledgement Receipt will establish the filing date of the application.

National Stage of an International Application under 35 U.S.C. 371
If a timely submission to enter the national stage of an international application is compliant with the conditions of 35 U.S.C. 371 and other applicable requirements a Form PCT/DO/EO/903 indicating acceptance of the application as a national stage submission under 35 U.S.C. 371 will be issued in addition to the Filing Receipt, in due course.

New International Application Filed with the USPTO as a Receiving Office
If a new international application is being filed and the international application includes the necessary components for an international filing date (see PCT Article 11 and MPEP 1810), a Notification of the International Application Number and of the International Filing Date (Form PCT/RO/105) will be issued in due course, subject to prescriptions concerning national security, and the date shown on this Acknowledgement Receipt will establish the international filing date of the application.

UNITED STATES PATENT AND TRADEMARK OFFICE

UNITED STATES DEPARTMENT OF COMMERCE
United States Patent and Trademark Office
Address: COMMISSIONER FOR PATENTS
P.O. Box 1450
Alexandria, Virginia 22313-1450
www.uspto.gov

APPLICATION NUMBER	FILING OR 371(C) DATE	FIRST NAMED APPLICANT	ATTY. DOCKET NO./TITLE
10/911,211	10/13/2004	Raman K. Rao	IPHD.P031

CONFIRMATION NO. 7409

53186
COURTNEY STANIFORD & GREGORY LLP
10001 N. De Anza Blvd., Suite 300
Cupertino, CA 95014

POWER OF ATTORNEY NOTICE

OC000000039449627

Date Mailed: 01/05/2010

NOTICE REGARDING CHANGE OF POWER OF ATTORNEY

This is in response to the Power of Attorney filed 12/23/2009.

- The Power of Attorney to you in this application has been revoked by the assignee who has intervened as provided by 37 CFR 3.71. Future correspondence will be mailed to the new address of record(37 CFR 1.33).

/ttkim/

Office of Data Management, Application Assistance Unit (571) 272-4000, or (571) 272-4200, or 1-888-786-0101

UNITED STATES PATENT AND TRADEMARK OFFICE

UNITED STATES DEPARTMENT OF COMMERCE
United States Patent and Trademark Office
Address: COMMISSIONER FOR PATENTS
P.O. Box 1450
Alexandria, Virginia 22313-1450
www.uspto.gov

APPLICATION NUMBER	FILING OR 371(C) DATE	FIRST NAMED APPLICANT	ATTY. DOCKET NO./TITLE
10/911,211	10/13/2004	Raman K. Rao	PA5118US

CONFIRMATION NO. 7409

22830
CARR & FERRELL LLP
2200 GENG ROAD
PALO ALTO, CA 94303

POA ACCEPTANCE LETTER

OC000000039449635

Date Mailed: 01/05/2010

NOTICE OF ACCEPTANCE OF POWER OF ATTORNEY

This is in response to the Power of Attorney filed 12/23/2009.

The Power of Attorney in this application is accepted. Correspondence in this application will be mailed to the above address as provided by 37 CFR 1.33.

/ttkim/

Office of Data Management, Application Assistance Unit (571) 272-4000, or (571) 272-4200, or 1-888-786-0101

Doc code: RCEX
Doc description: Request for Continued Examination (RCE)

PTO/SB/30EFS (07-09)
Approved for use through 07/31/2012. OMB 0651-0031
U.S. Patent and Trademark Office; U.S. DEPARTMENT OF COMMERCE
Under the Paperwork Reduction Act of 1995, no persons are required to respond to a collection of information unless it contains a valid OMB control number.

REQUEST FOR CONTINUED EXAMINATION(RCE)TRANSMITTAL
(Submitted Only via EFS-Web)

Application Number	10911211	Filing Date	2004-10-13	Docket Number (if applicable)	PA5118US	Art Unit	2617
First Named Inventor	Raman K. Rao			Examiner Name	David Wang		

This is a Request for Continued Examination (RCE) under 37 CFR 1.114 of the above-identified application.
Request for Continued Examination (RCE) practice under 37 CFR 1.114 does not apply to any utility or plant application filed prior to June 8, 1995, or to any design application. The Instruction Sheet for this form is located at WWW.USPTO.GOV

SUBMISSION REQUIRED UNDER 37 CFR 1.114

Note: If the RCE is proper, any previously filed unentered amendments and amendments enclosed with the RCE will be entered in the order in which they were filed unless applicant instructs otherwise. If applicant does not wish to have any previously filed unentered amendment(s) entered, applicant must request non-entry of such amendment(s).

☐ Previously submitted. If a final Office action is outstanding, any amendments filed after the final Office action may be considered as a submission even if this box is not checked.

- ☐ Consider the arguments in the Appeal Brief or Reply Brief previously filed on _____
- ☐ Other _____

☒ Enclosed

- ☒ Amendment/Reply
- ☐ Information Disclosure Statement (IDS)
- ☐ Affidavit(s)/ Declaration(s)
- ☒ Other Petition to Revive Unintentionally Abandoned Application

MISCELLANEOUS

☐ Suspension of action on the above-identified application is requested under 37 CFR 1.103(c) for a period of months _____
(Period of suspension shall not exceed 3 months; Fee under 37 CFR 1.17(i) required)

☐ Other _____

FEES

☒ **The RCE fee under 37 CFR 1.17(e) is required by 37 CFR 1.114 when the RCE is filed.**
The Director is hereby authorized to charge any underpayment of fees, or credit any overpayments, to Deposit Account No 060600

SIGNATURE OF APPLICANT, ATTORNEY, OR AGENT REQUIRED

☒ Patent Practitioner Signature
☐ Applicant Signature

PTO/SB/30EFS (07-09)
Approved for use through 07/31/2012. OMB 0651-0031
U.S. Patent and Trademark Office; U.S. DEPARTMENT OF COMMERCE

Under the Paperwork Reduction Act of 1995, no persons are required to respond to a collection of information unless it contains a valid OMB control number.

Signature of Registered U.S. Patent Practitioner			
Signature	/Breton G. Graham/	Date (YYYY-MM-DD)	2010-01-20
Name	Breton G. Graham	Registration Number	48149

This collection of information is required by 37 CFR 1.114. The information is required to obtain or retain a benefit by the public which is to file (and by the USPTO to process) an application. Confidentiality is governed by 35 U.S.C. 122 and 37 CFR 1.11 and 1.14. This collection is estimated to take 12 minutes to complete, including gathering, preparing, and submitting the completed application form to the USPTO. Time will vary depending upon the individual case. Any comments on the amount of time you require to complete this form and/or suggestions for reducing this burden, should be sent to the Chief Information Officer, U.S. Patent and Trademark Office, U.S. Department of Commerce, P.O. Box 1450, Alexandria, VA 22313-1450.

If you need assistance in completing the form, call 1-800-PTO-9199 and select option 2.

Doc Code: PET.OP
Document Description: Petition for Review by the Office of Petitions

PTO/SB/64 (07-09)
Approved for use through 07/31/2012. OMB 0651-0031
U.S. Patent and Trademark Office; U.S. DEPARTMENT OF COMMERCE
Under the Paperwork Reduction Act of 1995, no persons are required to respond to a collection of information unless it displays a valid OMB control number.

PETITION FOR REVIVAL OF AN APPLICATION FOR PATENT ABANDONED UNINTENTIONALLY UNDER 37 CFR 1.137(b)	Docket Number (Optional) PA5118US

First named inventor: Raman K. Rao

Application No.: 10/911,211 Art Unit: 2617

Filed: October 13, 2004 Examiner: David Wang

Title: Dynamically Configurable IP Based Wireless Device and Wireless Networks

Attention: Office of Petitions
Mail Stop Petition
Commissioner for Patents
P.O. Box 1450
Alexandria, VA 22313-1450
FAX (571) 273-8300

NOTE: If information or assistance is needed in completing this form, please contact Petitions Information at (571) 272-3282.

The above-identified application became abandoned for failure to file a timely and proper reply to a notice or action by the United States Patent and Trademark Office. The date of abandonment is the day after the expiration date of the period set for reply in the office notice or action plus any extensions of time actually obtained.

APPLICANT HEREBY PETITIONS FOR REVIVAL OF THIS APPLICATION

NOTE: A grantable petition requires the following items:
(1) Petition fee;
(2) Reply and/or issue fee;
(3) Terminal disclaimer with disclaimer fee - required for all utility and plant applications filed before June 8, 1995; and for all design applications; and
(4) Statement that the entire delay was unintentional

1. Petition Fee

☑ Small entity-fee $ 810 (37 CFR 1.17(m)). Application claims small entity status. See 37 CFR 1.27.

☐ Other than small entity-fee $ _____ (37 CFR 1.17(m))

2. Reply and/or fee

A. The reply and/or fee to the above-noted Office action in the form of RCE and Amendment (identify type of reply):

☐ has been filed previously on _____.

☑ is enclosed herewith.

B. The issue fee and publication fee (if applicable) of $_____.

☐ has been paid previously on _____.

☐ is enclosed herewith.

This collection of information is required by 37 CFR 1.137(b). The information is required to obtain or retain a benefit by the public which is to file (and by the USPTO to process) an application. Confidentiality is governed by 35 U.S.C. 122 and 37 CFR 1.11 and 1.14. This collection is estimated to take 1.0 hour to complete, including gathering, preparing, and submitting the completed application form to the USPTO. Time will vary depending upon the individual case. Any comments on the amount of time you require to complete this form and/or suggestions for reducing this burden, should be sent to the Chief Information Officer, U.S. Patent and Trademark Office, U.S. Department of Commerce, P.O. Box 1450, Alexandria, VA 22313-1450. DO NOT SEND FEES OR COMPLETED FORMS TO THIS ADDRESS. **SEND TO: Mail Stop Petition, Commissioner for Patents, P.O. Box 1450, Alexandria, VA 22313-1450.**

If you need assistance in completing the form, call 1-800-PTO-9199 and select option 2.

3. Terminal disclaimer with disclaimer fee

☑ Since this utility/plant application was filed on or after June 8, 1995, no terminal disclaimer is required.

☐ A terminal disclaimer (and disclaimer fee (37 CFR 1.20(d)) of $_____for a small entity or $_____ for other than a small entity) disclaiming the required period of time is enclosed herewith (see PTO/SB/63).

4. STATEMENT: The entire delay in filing the required reply from the due date for the required reply until the filing of a grantable petition under 37 CFR 1.137(b) was unintentional. [NOTE: The United States Patent and Trademark Office may require additional information if there is a question as to whether either the abandonment or the delay in filing a petition under 37 CFR 1.137(b) was unintentional (MPEP 711.03(c), subsections (III)(C) and (D)).]

WARNING:

Petitioner/applicant is cautioned to avoid submitting personal information in documents filed in a patent application that may contribute to identity theft. Personal information such as social security numbers, bank account numbers, or credit card numbers (other than a check or credit card authorization form PTO-2038 submitted for payment purposes) is never required by the USPTO to support a petition or an application. If this type of personal information is included in documents submitted to the USPTO, petitioners/applicants should consider redacting such personal information from the documents before submitting them to the USPTO. Petitioner/applicant is advised that the record of a patent application is available to the public after publication of the application (unless a non-publication request in compliance with 37 CFR 1.213(a) is made in the application) or issuance of a patent. Furthermore, the record from an abandoned application may also be available to the public if the application is referenced in a published application or an issued patent (see 37 CFR 1.14). Checks and credit card authorization forms PTO-2038 submitted for payment purposes are not retained in the application file and therefore are not publicly available.

/Breton G. Graham/	January 20, 2010
Signature	Date
Breton G. Graham	48,149
Type or Printed name	Registration Number, If applicable
2200 Geng Road	650-812-3400
Address	Telephone Number
Palo Alto, CA 94303	
Address	

Enclosures:

☑ Fee Payment

☑ Reply

☐ Terminal Disclaimer Form

☐ Additional sheets containing statements establishing unintentional delay

☑ Other: RCE

CERTIFICATE OF MAILING OR TRANSMISSION [37 CFR 1.8(a)]

I hereby certify that this correspondence is being:

☐ Deposited with the United States Postal Service on the date shown below with sufficient postage as first class mail in an envelope addressed to: Mail Stop Petition, Commissioner for Patents, P. O. Box 1450, Alexandria, VA 22313-1450.

☐ Transmitted by facsimile on the date shown below to the United States Patent and Trademark Office at (571) 273-8300.

Date	Signature
	Typed or printed name of person signing certificate

Privacy Act Statement

The **Privacy Act of 1974 (P.L. 93-579)** requires that you be given certain information in connection with your submission of the attached form related to a patent application or patent. Accordingly, pursuant to the requirements of the Act, please be advised that: (1) the general authority for the collection of this information is 35 U.S.C. 2(b)(2); (2) furnishing of the information solicited is voluntary; and (3) the principal purpose for which the information is used by the U.S. Patent and Trademark Office is to process and/or examine your submission related to a patent application or patent. If you do not furnish the requested information, the U.S. Patent and Trademark Office may not be able to process and/or examine your submission, which may result in termination of proceedings or abandonment of the application or expiration of the patent.

The information provided by you in this form will be subject to the following routine uses:

1. The information on this form will be treated confidentially to the extent allowed under the Freedom of Information Act (5 U.S.C. 552) and the Privacy Act (5 U.S.C. 552a). Records from this system of records may be disclosed to the Department of Justice to determine whether the Freedom of Information Act requires disclosure of these records.
2. A record from this system of records may be disclosed, as a routine use, in the course of presenting evidence to a court, magistrate, or administrative tribunal, including disclosures to opposing counsel in the course of settlement negotiations.
3. A record in this system of records may be disclosed, as a routine use, to a Member of Congress submitting a request involving an individual, to whom the record pertains, when the individual has requested assistance from the Member with respect to the subject matter of the record.
4. A record in this system of records may be disclosed, as a routine use, to a contractor of the Agency having need for the information in order to perform a contract. Recipients of information shall be required to comply with the requirements of the Privacy Act of 1974, as amended, pursuant to 5 U.S.C. 552a(m).
5. A record related to an International Application filed under the Patent Cooperation Treaty in this system of records may be disclosed, as a routine use, to the International Bureau of the World Intellectual Property Organization, pursuant to the Patent Cooperation Treaty.
6. A record in this system of records may be disclosed, as a routine use, to another federal agency for purposes of National Security review (35 U.S.C. 181) and for review pursuant to the Atomic Energy Act (42 U.S.C. 218(c)).
7. A record from this system of records may be disclosed, as a routine use, to the Administrator, General Services, or his/her designee, during an inspection of records conducted by GSA as part of that agency's responsibility to recommend improvements in records management practices and programs, under authority of 44 U.S.C. 2904 and 2906. Such disclosure shall be made in accordance with the GSA regulations governing inspection of records for this purpose, and any other relevant (i.e., GSA or Commerce) directive. Such disclosure shall not be used to make determinations about individuals.
8. A record from this system of records may be disclosed, as a routine use, to the public after either publication of the application pursuant to 35 U.S.C. 122(b) or issuance of a patent pursuant to 35 U.S.C. 151. Further, a record may be disclosed, subject to the limitations of 37 CFR 1.14, as a routine use, to the public if the record was filed in an application which became abandoned or in which the proceedings were terminated and which application is referenced by either a published application, an application open to public inspections or an issued patent.
9. A record from this system of records may be disclosed, as a routine use, to a Federal, State, or local law enforcement agency, if the USPTO becomes aware of a violation or potential violation of law or regulation.

Electronic Patent Application Fee Transmittal

Application Number:	10911211
Filing Date:	13-Oct-2004
Title of Invention:	Dynamically configurable IP based wireless device and wireless networks
First Named Inventor/Applicant Name:	Raman K. Rao
Filer:	Breton Geoffrey Graham/Patricia Thompson
Attorney Docket Number:	PA5118US

Filed as Small Entity

Utility under 35 USC 111(a) Filing Fees

Description	Fee Code	Quantity	Amount	Sub-Total in USD($)
Basic Filing:				
Pages:				
Claims:				
Miscellaneous-Filing:				
Petition:				
Petition-revive unintent. abandoned appl	2453	1	810	810
Patent-Appeals-and-Interference:				
Post-Allowance-and-Post-Issuance:				
Extension-of-Time:				

Description	Fee Code	Quantity	Amount	Sub-Total in USD($)
Miscellaneous:				
Request for continued examination	2801	1	405	405
		Total in USD ($)		**1215**

Electronic Acknowledgement Receipt	
EFS ID:	6840631
Application Number:	10911211
International Application Number:	
Confirmation Number:	7409
Title of Invention:	Dynamically configurable IP based wireless device and wireless networks
First Named Inventor/Applicant Name:	Raman K. Rao
Customer Number:	22830
Filer:	Breton Geoffrey Graham
Filer Authorized By:	
Attorney Docket Number:	PA5118US
Receipt Date:	20-JAN-2010
Filing Date:	13-OCT-2004
Time Stamp:	15:45:12
Application Type:	Utility under 35 USC 111(a)

Payment information:

Submitted with Payment	yes
Payment Type	Deposit Account
Payment was successfully received in RAM	$1215
RAM confirmation Number	2404
Deposit Account	060600
Authorized User	
The Director of the USPTO is hereby authorized to charge indicated fees and credit any overpayment as follows: Charge any Additional Fees required under 37 C.F.R. Section 1.16 (National application filing, search, and examination fees) Charge any Additional Fees required under 37 C.F.R. Section 1.17 (Patent application and reexamination processing fees)	

Charge any Additional Fees required under 37 C.F.R. Section 1.19 (Document supply fees) Charge any Additional Fees required under 37 C.F.R. Section 1.20 (Post Issuance fees) Charge any Additional Fees required under 37 C.F.R. Section 1.21 (Miscellaneous fees and charges)	

File Listing:

Document Number	Document Description	File Name	File Size(Bytes)/ Message Digest	Multi Part /.zip	Pages (if appl.)
1		PA5118US_Response.pdf	171059 d537dd19bc44c6cdef9ca5684dc2aad79b02c8a0	yes	14

	Multipart Description/PDF files in .zip description		
	Document Description	**Start**	**End**
	Amendment After Final	1	1
	Claims	2	5
	Applicant Arguments/Remarks Made in an Amendment	6	14

Warnings:					
Information:					
2	Request for Continued Examination (RCE)	PA5118US_RCE_SB30e.pdf	31108 c97b0ab5fc64c4121b70ae9348d67c3067514b03	no	2
Warnings:					
This is not a USPTO supplied RCE SB30 form.					
Information:					
3	Petition for review by the Office of Petitions.	PA5118US_Petition_To_Revive_SB64.pdf	205667 568ea54f74822d97c68b0149e85c85698cd4b0ec	no	3
Warnings:					
Information:					
4	Fee Worksheet (PTO-875)	fee-info.pdf	31921 f7d12d5ca344c7db1c30601f1d64fb325bee082c	no	2
Warnings:					
Information:					
		Total Files Size (in bytes):	439755		

This Acknowledgement Receipt evidences receipt on the noted date by the USPTO of the indicated documents, characterized by the applicant, and including page counts, where applicable. It serves as evidence of receipt similar to a Post Card, as described in MPEP 503.

New Applications Under 35 U.S.C. 111
If a new application is being filed and the application includes the necessary components for a filing date (see 37 CFR 1.53(b)-(d) and MPEP 506), a Filing Receipt (37 CFR 1.54) will be issued in due course and the date shown on this Acknowledgement Receipt will establish the filing date of the application.

National Stage of an International Application under 35 U.S.C. 371
If a timely submission to enter the national stage of an international application is compliant with the conditions of 35 U.S.C. 371 and other applicable requirements a Form PCT/DO/EO/903 indicating acceptance of the application as a national stage submission under 35 U.S.C. 371 will be issued in addition to the Filing Receipt, in due course.

New International Application Filed with the USPTO as a Receiving Office
If a new international application is being filed and the international application includes the necessary components for an international filing date (see PCT Article 11 and MPEP 1810), a Notification of the International Application Number and of the International Filing Date (Form PCT/RO/105) will be issued in due course, subject to prescriptions concerning national security, and the date shown on this Acknowledgement Receipt will establish the international filing date of the application.

IN THE UNITED STATES PATENT AND TRADEMARK OFFICE

APPLICANTS:	Raman K. Rao *et al*.
APPLICATION NO.:	10/911,211
FILING DATE:	October 13, 2004
TITLE:	Dynamically Configurable IP Based Wireless Device and Wireless Networks
EXAMINER:	David Wang
ART UNIT:	2617
CONF. NO:	7409
ATTY.DKT.NO.:	PA5118US

RESPONSE AND REQUEST FOR CONTINUED EXAMINATION

Examiner Wang:

In response to the Final Office Action mailed March 24, 2008 (*Office Action*), please consider the following amendments and arguments. The present amendment is submitted concurrently with a PETITION FOR REVIVAL OF AN APPLICATION FOR PATENT ABANDONED UNINTENTIONALLY UNDER 37 C.F.R. § 1.137(B) and authorization to charge the applicable fees to Deposit Account 06-0600. The Applicants also submit a REQUEST FOR CONTINUED EXAMINATION herewith. The Applicants' **amendments**, **remarks**, and **conclusions** begin on **pages two**, **six**, and **fourteen**, respectively.

IN THE CLAIMS

This listing of claims will replace all prior versions, and listings, of claims in the application.

1-35. (Canceled).

36. (Previously Presented) In a mobile communication system, a method for configuring a mobile communication device (MD), the method comprising:

storing data on a server, the data comprising a plurality of functional instruction sets, content, and MD configuration software;

the MD remotely requesting a mode configuration of the server, wherein the server configures the MD as one or more of a plurality of intelligent devices comprising a cell phone, a remote TV controller, and a remote controller of a plurality of devices;

configuring the MD for a selected set of functions including communication, computation, command, sensing and control;

establishing the plurality of functional instructions for dynamic reconfiguration of the MD from one of the selected sets of functions to another;

alternatively accessing one of the plurality of functional instruction sets from a storage device on the MD, wherein the storage device comprises at least one lookup table;

executing a dynamic reconfiguration of the MD using one of,

the processing and storage capabilities of the MD;

the processing and storage capabilities of the server; and

processing and storage capabilities of the MD in conjunction with processing and storage capabilities of the server;

the MD downloading from the server a macro command, wherein the macro command enables the MD to control a specific intelligent device;

the MD dynamically reconfiguring to transmit and receive in a plurality of environments, comprising an office environment, a home environment, an Internet protocol (IP) environment, and a plurality of public carrier environments; and

Ex.1002
APPLE INC. / Page 211 of 610

the MD sensing an environment the MD is primarily operating in, and maintaining an ability to switch instantaneously to a different environment.

37. (Currently Amended) A system for dynamically configuring a mobile communication device (MD), the system comprising:

a server comprising storage means for storing data, the data comprising a plurality of functional instruction sets, content, and MD configuration software;

at least one dynamically configurable MD communicatively coupled to the server, wherein the MD is configurable to remotely request a mode configuration of the server, wherein the server configures the MD as one or more of a plurality of intelligent devices comprising a cell phone, a remote TV controller, and a remote controller of a plurality of devices;

means for configuring the MD for a selected set of functions including communication, computation, command, sensing and control;

means for establishing the plurality of functional instructions for dynamic reconfiguration of the MD from one of the selected sets of functions to another;

means for alternatively accessing one of the plurality of functional instruction sets from a storage device on the MD, wherein the storage device comprises at least one lookup table;

means for executing a dynamic reconfiguration of the MD using one of,

the processing and storage capabilities of the MD;

the processing and storage capabilities of the server; and

processing and storage capabilities of the MD in conjunction with processing and storage capabilities of the server;

means for the MD to download from the server a macro command, wherein the macro command enables the MD to control a specific intelligent device;

means for dynamically reconfiguring the MD to transmit and receive in a plurality of environments, comprising an office environment, a home environment, an Internet protocol (IP) environment, and a plurality of public carrier environments; ~~and~~

means for the MD to sense an environment the MD is primarily operating in, and maintaining an ability to switch instantaneously to a different environment; and

a Global Positioning System unit that allows the MD to know its exact location, wherein the exact location of the MD is used for a plurality of functions, including sensing one or more networks.

38. (New) A method for dynamically configuring a mobile communication device (MD) in a mobile communication system, the method comprising:

storing data on a server, the data comprising a plurality of functional instruction sets, content, and MD configuration software;

the MD remotely requesting a mode configuration of the server, wherein the server configures the MD as one or more of a plurality of intelligent devices comprising a cell phone, a remote TV controller, and a remote controller of a plurality of devices;

configuring the MD for a selected set of functions including communication, computation, command, sensing and control, wherein communication protocols configure the mobile communication system for communication;

establishing the plurality of functional instructions for dynamic reconfiguration of the MD from one of the selected sets of functions to another;

alternatively accessing one of the plurality of functional instruction sets from a storage device on the MD, wherein the storage device comprises at least one lookup table;

executing a dynamic reconfiguration of the MD;

the MD downloading from the server a macro command, wherein the macro command enables the MD to control a specific intelligent device;

the MD dynamically reconfiguring to transmit and receive in a plurality of environments, comprising an office environment, a home environment, an Internet protocol (IP) environment, and a plurality of public carrier environments, wherein the MD is dynamically tuned for transmit and receive functions suitable for each environment;

the MD configured to bypass a public wireless carrier service when the public wireless carrier service is not required for communication; and

the MD sensing an environment the MD is primarily operating in, and maintaining an ability to switch instantaneously to a different environment, wherein the MD is configured to be in a watchdog or sleep mode in different environments.

Ex.1002
APPLE INC. / Page 214 of 610

REMARKS

In the Office Action of March 24, 2008, the Examiner rejected claims 36 and 37. Based on the foregoing amendments and following remarks, the Applicants respectfully request reconsideration of the Application.

Revival of Application

The present application became abandoned for failure to file a reply to the action mailed March 24, 2008. The Applicants have submitted a Petition to Revive an Unintentionally Abandoned Application (Form PT/SB/64), the required fees (specifically, authorization to charge the same to deposit account 06-0600), the present reply, and a statement that the entire delay was unintentional. The Applicants believe that they have complied with the requirements for revival under 37 CFR § 1.137(b) and respectfully request that the petition be granted.

Amendments to the Claims

No substantive amendments to the claims have been made. The Applicants have amended claim 37 to change the location of the word "and." New claim 38 has been added. These amendments and new claim present no new matter.

Rejection under 103(a) over *Kim* and *Tate*

Claim 36 was rejected under 35 U.S.C. § 103(a) as being unpatentable over United States Patent No. 6,546,002 ("*Kim*") in view of United States Patent No. 6,493,751 ("*Tate*"). (*Office Action*, 2). Because the combination of *Kim* and *Tate* fails to make obvious each limitation of claim 36, the Applicants assert that this claim is patentable over the cited art.

Claim 36 is patentable over Kim and Tate

Claim 36 was rejected over the combination of *Kim* and *Tate*. Claim 36 recites, in part:

> storing data on a server, the data comprising a plurality of functional instruction sets, content, and MD **configuration software**;
> **configuring the MD for a selected set of functions including communication, computation, command, sensing and control;**

establishing the plurality of functional instructions for dynamic reconfiguration of the MD from one of the selected sets of functions to another;

the MD dynamically reconfiguring to transmit and receive in a plurality of environments, comprising an office environment, a home environment, an Internet protocol (IP) environment, and a plurality of public carrier environments.

(*Claim 36*, emphasis added.)

The Examiner states that *Kim* teaches "[s]toring data on a server (dB 136, Kim et al. Fig. 15), the data comprising a plurality of functional instruction sets, content, and MD configuration software (Profile Data 138a, Kim et al. Fig. 15)." (*Office Action*, 2). Claim 36 of the instant application recites, as listed above, "storing data on a server, the data comprising a plurality of functional instruction sets, content, and MD **configuration software**." However, the cited portions of *Kim* do not teach configuration software. In contrast, Figure 15 of *Kim* discloses profile managers of multiple communication networks connected by a gateway. Disclosing profile managers of multiple communication networks connected by a gateway does not teach "**configuration software**" as recited in claim 36 of the instant application.

The Examiner further asserts that *Kim* discloses "[c]onfiguring the MD for a selected set of functions including communication (user identification 170 for communication, Kim et al. Fig. 3), computation (output 122, 124, 126, 128, 130, Kim et al. Fig. 3), command (user interface input 110, Kim et al. Fig. 3), sensing and control (input events 118,120, Kim et al. Fig. 3)." Claim 36 of the instant application recites, as listed above, "**configuring the MD for a selected set of functions including communication, computation, command, sensing and control**." However, these elements are not taught in Figure 3 of *Kim*. Figure 3 of *Kim* is simply a block diagram of an information and storage system implementing an MIA. (*Kim*, column 6, lines 17-29). The MIA 102 interfaces with three sections (user I/O section 104, local memory section 106, and network section 108) of the system. The MIA 102 is used to manage, access, and retrieve information from the network and local memory. The MIA 102 is also used to initiate programs, applications, URL bookmarks, and other menu items, and can be implemented by way of software, firmware, or hardware. (*Kim*, column 6, lines 30-37). ***Kim* is limited to teaching this interface agent that merely facilitates access to data over a network. *Kim* does**

not teach anything regarding configuring or dynamically configuring a mobile device. Depicting an information and storage system implementing an MIA does not disclose "**configuring the MD for a selected set of functions including communication, computation, command, sensing and control**" as recited in claim 36 of the instant application.

The Examiner proceeds to admit that "*Kim* may not pictorially teach dynamic reconfiguration." (*Office Action*, 3). The Examiner asserts that *Tate* "better teaches dynamic reconfiguration, even preferable to an environment: Establishing the plurality of functional instructions for dynamic reconfiguration of the MD from one of the selected sets of functions to another (selecting a different mobile configuration, Tate et al. Fig. 3)." (*Office Action*, 3). Claim 36 of the instant application recites, as listed above, "**establishing the plurality of functional instructions for dynamic reconfiguration of the MD from one of the selected sets of functions to another**." However, Figure 3 of *Tate* does not teach these elements. In contrast, Figure 3 of *Tate* depicts the structural contents of exemplary mobile configurations in a data structure format. Disclosing structural contents of exemplary mobile configurations in a data structure format does not teach "**establishing the plurality of functional instructions for dynamic reconfiguration of the MD from one of the selected sets of functions to another**" as recited in claim 36 of the instant application.

The Examiner further indicates that it would have been obvious to one of ordinary skill in the art at the time the invention was made to combine *Kim* and *Tate*. (See *Id.*). Specifically, the Examiner states that "it would have been obvious to a person having ordinary skill in the art at the time the invention was made to dynamically reconfigure a device so as to avoid "...cumbersome and nonintuitive reconfiguration by a user" (Tate et al. c4 14-21)." (*Id.*). The Applicants believe that this statement by the Examiner is a prohibited conclusion in that it is unsupported by any reasoning. "[R]ejections on obviousness cannot be sustained by mere conclusory statements"; "there must be some articulated reasoning with some rational underpinning to support the legal conclusion of obviousness." *KSR International Co. v. Teleflex Inc.*, 550 USPQ2d 1385, 1396 (2007).

Further, the Applicants respectfully disagree that it would have been obvious to combine *Kim* and *Tate*. Regardless, *Tate* does not cure the deficiencies of *Kim*. *Kim* is directed to

Ex.1002
APPLE INC. / Page 217 of 610

a system and method for using a mobile interface agent (MIA) in order to dynamically access programs, applications, bookmarked URLs, IP addresses, telephone numbers, television channels, radio stations, user profiles, and the like that are specific to a user via any computer type device. The mobile interface agent can be accessible using any computer from any geographical location, assuming that the computer can be connected to a network. The mobile interface agent is essentially an agent that allows the user to access files, documents, programs, applications, IP addresses, URL bookmarks, telephone numbers, television channels, radio stations, and other menu items from any computer. *Kim* also relates to a per user based licensing model that allows the user to remotely access and use computer programs. (See *Kim*, Abstract).

Tate, on the other hand, is directed to a mobile configuration manager application for managing network configuration parameters. Ergo, the Examiner has not shown a rational underpinning to support the legal conclusion of obviousness. There is no teaching or even a suggestion in the cited art to combine *Kim* with *Tate*.

The Examiner further argues that *Kim* teaches "[t]he MD dynamically reconfiguring to transmit and receive in a plurality of environments, comprising an office environment (office in Lake City in mobile configuration #2, Tate et al. Fig. 3), a home environment (working from home in mobile configuration #1, Tate et al. Fig. 3), an Internet protocol (IP) environment, and a plurality of public carrier environments." Claim 36 of the instant application recites, as listed above, "**the MD dynamically reconfiguring to transmit and receive in a plurality of environments, comprising an office environment, a home environment, an Internet protocol (IP) environment, and a plurality of public carrier environments**." However, Figure 3 of *Tate* does not teach these elements. The Examiner simply points to Figure 3 without giving any explanation. As mentioned above, Figure 3 of *Tate* depicts the structural contents of exemplary mobile configurations in a data structure format. Teaching structural contents of exemplary mobile configurations in a data structure format does not disclose "**the MD dynamically reconfiguring to transmit and receive in a plurality of environments, comprising an office environment, a home environment, an Internet protocol (IP) environment, and a plurality of public carrier environments**" as recited in claim 36 of the instant application.

Ex.1002
APPLE INC. / Page 218 of 610

For at least these reasons, *Kim* and *Tate*, whether considered individually or in combination, do not disclose or suggest the embodiment of claim 36. Claim 36 is thus allowable over *Kim* and *Tate*.

Rejection under 103(a) over *Kim*, *Tate*, and *Watts*

Claim 37 was rejected under 35 U.S.C. § 103(a) as being unpatentable over *Kim* in view of and *Tate* and United States Patent No. 6,119,186 ("*Watts*"). *Office Action*, 4. Because the combination of *Kim*, *Tate*, and *Watts* fails to make obvious each limitation of claim 37, the Applicants assert that these claims are patentable over the cited art.

Claim 37 is patentable over Kim, Tate, and Watts

Claim 37 was rejected over the combination of *Kim*, *Tate*, and *Watts*. Amended claim 37 recites, in part:

> **means for configuring the MD for a selected set of functions including communication, computation, command, sensing and control**;
> **means for establishing the plurality of functional instructions for dynamic reconfiguration of the MD from one of the selected sets of functions to another;**
> **means for dynamically reconfiguring the MD to transmit and receive in a plurality of environments, comprising an office environment, a home environment, an Internet protocol (IP) environment, and a plurality of public carrier environments;**

Claim 37, emphasis added.)

Claim 37 contains similar elements as claim 36, and is therefore patentable over *Kim* and *Tate* for at least the same reasons as claim 36. The Examiner admits that *Kim* and *Tate* do not teach a global positioning system (GPS). The Examiner relies on *Watts* for teaching a GPS. (*Office Action*, 7).

When applying 35 U.S.C. 103(a), the following tenets of patent law must be adhered to: (A) The claimed invention must be **considered as a whole**; (B) The **references must be considered as a whole and must suggest the desirability and thus the obviousness of making the combination**; (C) The references must be viewed without the benefit of **impermissible**

hindsight vision afforded by the claimed invention; and (D) Reasonable expectation of success is the standard with which obviousness is determined. See *Hodosh v. Block Drug Co., Inc.*, 786 F.2d 1136, 1143 n.5, 229 USPQ 182, 187 n.5 (Fed. Cir. 1986). The Appellants respectfully suggest that the references and the presently claimed invention have not been considered as a whole, especially in light of the aforementioned combination of references. Additionally the references must be considered as a whole and must suggest the desirability and thus the obviousness of making the combination. In that regard, the Appellants respectfully contend that a *prima facie* case of obviousness has not been made and that the rejection is overcome.

Notwithstanding, the Examiner contends that it would have been obvious to one of ordinary skill in the art at the time the invention was made to combine *Kim* with *Tate* and *Watts*. (See *Id*.). Specifically, the Examiner states that "it would have been obvious to a person having ordinary skill in the art at the time the invention was made to "use GPS to determine location to provide a computer "…which detects changes in an environment associated with the computer, determines an optimum configuration based on the new environment and modifies the configuration of the computer based on the optimum configuration" (Watts et al. c2 11-16)." (*Office Action*, 7). The Applicants believe that this statement by the Examiner is a prohibited conclusion in that it is unsupported by any reasoning. See *KSR International* at 1396. Therefore, the Examiner has not shown a rational underpinning to support the legal conclusion of obviousness. There is no teaching or even a suggestion in the cited art to combine *Kim* with *Tate* and *Watts*. Watts is simply directed to a computer system that utilizes an environmental manager to detect and respond to changing environmental conditions. The purpose of this is to enhance and simplify a user's interaction with the computer. The Applicants respectfully disagree that it would have been obvious to combine *Kim*, *Tate*, and *Watts*.

The Examiner's motivation is not specified in the *Office Action*. The Applicants challenge the purported motivation to combine in that the Examiner has failed to identify any teaching in any reference or any evidence that is actually known or would be known to one of ordinary skill in the art as to why one would make the purported combination as presented by the Examiner.

As an initial matter, the Appellants appreciate that "[t]he rationale to modify or combine the prior art does not have to be expressly stated in the prior art" and that "the rationale . . . may be reasoned from knowledge generally available to one of ordinary skill in the art." *In re Fine*, 837 F.2d 1071 (Fed. Cir. 1988). That said, a mere conclusory statement that modifications of the prior art to meet the claimed invention would have been well within the ordinary skill of the art "because the references relied upon teach that all aspects of the claimed invention were individually known in the art is **not sufficient** to establish a *prima facie* case of obviousness without some **objective reason to combine** the teachings of the references." *Ex parte Levengood*, 28 USPQ2d 1300 (Bd. Pat. App. & Inter. 1993) (emphasis added). The Supreme Court re-affirmed the same in *KSR International Co. v. Teleflex Inc.* wherein the court found that "rejections on obviousness cannot be sustained by **mere conclusory statements**; instead, there must be some **articulated reasoning** with some **rational underpinning** to support the legal conclusion of obviousness." 550 USPQ2d 1385, 1396 (2007) (emphasis added); see also *In re Kahn*, 441 F.3d 977, 988 (Fed. Cir. 2006). Absent such objective articulated reasoning and some rational underpinning related to the same, the Appellants contend that a *prima facie* case of obviousness has not been and that the Examiner's rejection is overcome.

Regardless, *Watts* does not cure the deficiencies of *Kim* and *Tate*. The arguments set forth with respect to claim 36 are incorporated herein. Thus, the cited portions of art, as discussed above, do not teach at least the elements of claim 37 recited above.

For at least these reasons, *Kim*, *Tate*, and *Watts*, whether considered individually or in combination, do not disclose or suggest the embodiment of claim 37. Claim 37 is thus allowable over *Kim*, *Tate*, and *Watts*.

New Claim 38

New claim 38 has been added and presents no new matter. The cited art fails to disclose aspects of claim 38 that are present in claims 36 and 37, as discussed above. Further, additional limitations have been added to claim 38. These limitations include "wherein communication protocols configure the mobile communication system for communication . . . wherein the MD is dynamically tuned for transmit and receive functions suitable for each environment; the MD

configured to bypass a public wireless carrier service when the public wireless carrier service is not required for communication . . . wherein the MD is configured to be in a watchdog or sleep mode in different environments."

The Applicants believe that new independent claim 38 is not anticipated by, and is thus patentable over, the cited references because the cited references fail to disclose all of the claimed elements.

Ex.1002
APPLE INC. / Page 222 of 610

CONCLUSION

Based on the foregoing amendments and remarks, the Applicants believe the rejections have been overcome, and that the present Application is in condition for allowance. If the Examiner has any questions regarding the case, the Examiner is invited to contact Applicants' undersigned representative.

The Commissioner is authorized to charge any underpayment or credit any overpayment to Deposit Account No. 06-0600 for any matter in connection with this response, including any fee for extension of time, which may be required.

Respectfully submitted,

Date: January 20, 2010

By: /Breton G. Graham/

Breton G. Graham, Reg. No. 48,149
Carr & Ferrell LLP
2200 Geng Road
Palo Alto, CA 94303
Phone: (650) 812-3400
Fax: (650) 812-3444

PTO/SB/06 (09-11)
Approved for use through 1/31/2014. OMB 0651-0032
U.S. Patent and Trademark Office; U.S. DEPARTMENT OF COMMERCE
Under the Paperwork Reduction Act of 1995, no persons are required to respond to a collection of information unless it displays a valid OMB control number.

PATENT APPLICATION FEE DETERMINATION RECORD Substitute for Form PTO-875	Application or Docket Number 10/911,211	Filing Date 10/13/2004	☐ To be Mailed

ENTITY: ☐ LARGE ☒ SMALL ☐ MICRO

APPLICATION AS FILED – PART I

	(Column 1)	(Column 2)		
FOR	NUMBER FILED	NUMBER EXTRA	RATE ($)	FEE ($)
☐ BASIC FEE (37 CFR 1.16(a), (b), or (c))	N/A	N/A	N/A	
☐ SEARCH FEE (37 CFR 1.16(k), (i), or (m))	N/A	N/A	N/A	
☐ EXAMINATION FEE (37 CFR 1.16(o), (p), or (q))	N/A	N/A	N/A	
TOTAL CLAIMS (37 CFR 1.16(i))	minus 20 =	*	X $ =	
INDEPENDENT CLAIMS (37 CFR 1.16(h))	minus 3 =	*	X $ =	
☐ APPLICATION SIZE FEE (37 CFR 1.16(s))	If the specification and drawings exceed 100 sheets of paper, the application size fee due is $310 ($155 for small entity) for each additional 50 sheets or fraction thereof. See 35 U.S.C. 41(a)(1)(G) and 37 CFR 1.16(s).			
☐ MULTIPLE DEPENDENT CLAIM PRESENT (37 CFR 1.16(j))				
* If the difference in column 1 is less than zero, enter "0" in column 2.			TOTAL	

APPLICATION AS AMENDED – PART II

AMENDMENT	01/20/2010	(Column 1) CLAIMS REMAINING AFTER AMENDMENT		(Column 2) HIGHEST NUMBER PREVIOUSLY PAID FOR	(Column 3) PRESENT EXTRA	RATE ($)	ADDITIONAL FEE ($)
	Total (37 CFR 1.16(i))	* 3	Minus	** 20	= 0	X $26 =	0
	Independent (37 CFR 1.16(h))	* 3	Minus	***3	= 0	X $110 =	0
	☐ Application Size Fee (37 CFR 1.16(s))						
	☐ FIRST PRESENTATION OF MULTIPLE DEPENDENT CLAIM (37 CFR 1.16(j))						
						TOTAL ADD'L FEE	0

AMENDMENT		(Column 1) CLAIMS REMAINING AFTER AMENDMENT		(Column 2) HIGHEST NUMBER PREVIOUSLY PAID FOR	(Column 3) PRESENT EXTRA	RATE ($)	ADDITIONAL FEE ($)
	Total (37 CFR 1.16(i))	*	Minus	**	=	X $ =	
	Independent (37 CFR 1.16(h))	*	Minus	***	=	X $ =	
	☐ Application Size Fee (37 CFR 1.16(s))						
	☐ FIRST PRESENTATION OF MULTIPLE DEPENDENT CLAIM (37 CFR 1.16(j))						
						TOTAL ADD'L FEE	

* If the entry in column 1 is less than the entry in column 2, write "0" in column 3.
** If the "Highest Number Previously Paid For" IN THIS SPACE is less than 20, enter "20".
*** If the "Highest Number Previously Paid For" IN THIS SPACE is less than 3, enter "3".
The "Highest Number Previously Paid For" (Total or Independent) is the highest number found in the appropriate box in column 1.

LIE
KIMBERLY PANNELL

This collection of information is required by 37 CFR 1.16. The information is required to obtain or retain a benefit by the public which is to file (and by the USPTO to process) an application. Confidentiality is governed by 35 U.S.C. 122 and 37 CFR 1.14. This collection is estimated to take 12 minutes to complete, including gathering, preparing, and submitting the completed application form to the USPTO. Time will vary depending upon the individual case. Any comments on the amount of time you require to complete this form and/or suggestions for reducing this burden, should be sent to the Chief Information Officer, U.S. Patent and Trademark Office, U.S. Department of Commerce, P.O. Box 1450, Alexandria, VA 22313-1450. DO NOT SEND FEES OR COMPLETED FORMS TO THIS ADDRESS. **SEND TO: Commissioner for Patents, P.O. Box 1450, Alexandria, VA 22313-1450.**
If you need assistance in completing the form, call 1-800-PTO-9199 and select option 2.

UNITED STATES PATENT AND TRADEMARK OFFICE

Commissioner for Patents
United States Patent and Trademark Office
P.O. Box 1450
Alexandria, VA 22313-1450
www.uspto.gov

CARR & FERRELL LLP
2200 GENG ROAD
PALO ALTO CA 94303

MAILED

MAR 24 2010

OFFICE OF PETITIONS

In re Application of	:	
Rao et al.	:	
Application No. 10/911,211	:	DECISION ON PETITION
Filed: October 13, 2004	:	
Attorney Docket No. PA5118US	:	

This is a decision on the petition under the unintentional provisions of 37 CFR 1.137(b), filed January 20, 2010, to revive the above-identified application.

The petition is **GRANTED**.

This application became abandoned for failure to reply in a timely manner to the final Office action mailed March 24, 2008. No extensions of time under the provisions of 37 CFR 1.136(a) were obtained. Accordingly, this application became abandoned on June 25, 2008. A Notice of Abandonment was mailed December 19, 2008.

The petition satisfies the requirements of 37 CFR 1.137(b) in that petitioner has supplied (1) the reply in the form of a Request for Continued Examination (RCE) and fee of $405.00 and the submission required by 37 CFR 1.114; (2) the petition fee of $810.00; and (3) a proper statement of unintentional delay.

It is not apparent whether the statement of unintentional delay was signed by a person who would have been in a position of knowing that the **entire** delay in filing the required reply from the due date for the reply until the filing of a grantable petition pursuant to 37 CFR 1.137(b) was unintentional. Nevertheless, in accordance with 37 CFR 10.18, the statement is accepted as constituting a certification of unintentional delay. However, in the event that petitioner has no knowledge that the delay was unintentional, petitioner must make such an inquiry to ascertain that, in fact, the delay was unintentional. If petitioner discovers that the delay was intentional, petitioner must notify the Office.

Telephone inquiries concerning this decision should be directed to the undersigned at (571) 272-7751.

This matter is being referred to Technology Center 2617 for processing of the Request for Continued Examination under 37 CFR 1.114 and the Amendment filed with the instant petition.

Joan Olszewski
Petitions Examiner
Office of Petitions

UNITED STATES PATENT AND TRADEMARK OFFICE

UNITED STATES DEPARTMENT OF COMMERCE
United States Patent and Trademark Office
Address: COMMISSIONER FOR PATENTS
P.O. Box 1450
Alexandria, Virginia 22313-1450
www.uspto.gov

APPLICATION NO.	FILING DATE	FIRST NAMED INVENTOR	ATTORNEY DOCKET NO.	CONFIRMATION NO.
10/911,211	10/13/2004	Raman K. Rao	PA5118US	7409

22830 7590 04/19/2010

CARR & FERRELL LLP
2200 GENG ROAD
PALO ALTO, CA 94303

EXAMINER	
WANG, DAVID	
ART UNIT	PAPER NUMBER
2617 .	
MAIL DATE	DELIVERY MODE
04/19/2010	PAPER

Please find below and/or attached an Office communication concerning this application or proceeding.

The time period for reply, if any, is set in the attached communication.

UNITED STATES DEPARTMENT OF COMMERCE
U.S. Patent and Trademark Office
Address: COMMISSIONER FOR PATENTS
P.O. Box 1450
Alexandria, Virginia 22313-1450

APPLICATION NO./ CONTROL NO.	FILING DATE	FIRST NAMED INVENTOR / PATENT IN REEXAMINATION	ATTORNEY DOCKET NO.

EXAMINER	
KIMBERLY D. WILLIAMS	
ART UNIT	PAPER
2600	

DATE MAILED:

Please find below and/or attached an Office communication concerning this application or proceeding.

Commissioner for Patents

The abandonment has been withdrawn in the application.

/Kimberly D. Williams/
Supervisory Legal Instruments Examiner
Tech Center 2600

PTO-90C (Rev.04-03)

PTO/SB/08a (01-10)
Approved for use through 07/31/2012. OMB 0651-0031
U.S. Patent and Trademark Office; U.S. DEPARTMENT OF COMMERCE

Under the Paperwork Reduction Act of 1995, no persons are required to respond to a collection of information unless it contains a valid OMB control number.

INFORMATION DISCLOSURE STATEMENT BY APPLICANT

(Not for submission under 37 CFR 1.99)

Application Number	10911211
Filing Date	2004-10-13
First Named Inventor	Raman K. Rao
Art Unit	2617
Examiner Name	David Wang
Attorney Docket Number	PA5118US

U.S.PATENTS

Examiner Initial*	Cite No	Patent Number	Kind Code[1]	Issue Date	Name of Patentee or Applicant of cited Document	Pages,Columns,Lines where Relevant Passages or Relevant Figures Appear
	1	6421429		2002-07-16	Merritt et al.	
	2	6826405		2004-11-30	Doviak et al.	
	3	7286658		2007-10-23	Henderson	

If you wish to add additional U.S. Patent citation information please click the Add button.

U.S.PATENT APPLICATION PUBLICATIONS

Examiner Initial*	Cite No	Publication Number	Kind Code[1]	Publication Date	Name of Patentee or Applicant of cited Document	Pages,Columns,Lines where Relevant Passages or Relevant Figures Appear
	1					

If you wish to add additional U.S. Published Application citation information please click the Add button.

FOREIGN PATENT DOCUMENTS

Examiner Initial*	Cite No	Foreign Document Number[3]	Country Code[2] i	Kind Code[4]	Publication Date	Name of Patentee or Applicant of cited Document	Pages,Columns,Lines where Relevant Passages or Relevant Figures Appear	T[5]
	1							☐

INFORMATION DISCLOSURE STATEMENT BY APPLICANT (**Not for submission under 37 CFR 1.99)**		
	Application Number	10911211
	Filing Date	2004-10-13
	First Named Inventor	Raman K. Rao
	Art Unit	2617
	Examiner Name	David Wang
	Attorney Docket Number	PA5118US

If you wish to add additional Foreign Patent Document citation information please click the Add button			
NON-PATENT LITERATURE DOCUMENTS			
Examiner Initials*	Cite No	Include name of the author (in CAPITAL LETTERS), title of the article (when appropriate), title of the item (book, magazine, journal, serial, symposium, catalog, etc), date, pages(s), volume-issue number(s), publisher, city and/or country where published.	T[5]
	1		☐
If you wish to add additional non-patent literature document citation information please click the Add button			

EXAMINER SIGNATURE			
Examiner Signature		Date Considered	

*EXAMINER: Initial if reference considered, whether or not citation is in conformance with MPEP 609. Draw line through a citation if not in conformance and not considered. Include copy of this form with next communication to applicant.

[1] See Kind Codes of USPTO Patent Documents at www.USPTO.GOV or MPEP 901.04. [2] Enter office that issued the document, by the two-letter code (WIPO Standard ST.3). [3] For Japanese patent documents, the indication of the year of the reign of the Emperor must precede the serial number of the patent document. [4] Kind of document by the appropriate symbols as indicated on the document under WIPO Standard ST.16 if possible. [5] Applicant is to place a check mark here if English language translation is attached.

INFORMATION DISCLOSURE STATEMENT BY APPLICANT (**Not for submission under 37 CFR 1.99)**		
	Application Number	10911211
	Filing Date	2004-10-13
	First Named Inventor	Raman K. Rao
	Art Unit	2617
	Examiner Name	David Wang
	Attorney Docket Number	PA5118US

CERTIFICATION STATEMENT

Please see 37 CFR 1.97 and 1.98 to make the appropriate selection(s):

☐ That each item of information contained in the information disclosure statement was first cited in any communication from a foreign patent office in a counterpart foreign application not more than three months prior to the filing of the information disclosure statement. See 37 CFR 1.97(e)(1).

OR

☐ That no item of information contained in the information disclosure statement was cited in a communication from a foreign patent office in a counterpart foreign application, and, to the knowledge of the person signing the certification after making reasonable inquiry, no item of information contained in the information disclosure statement was known to any individual designated in 37 CFR 1.56(c) more than three months prior to the filing of the information disclosure statement. See 37 CFR 1.97(e)(2).

☐ See attached certification statement.

☐ Fee set forth in 37 CFR 1.17 (p) has been submitted herewith.

☒ None

SIGNATURE

A signature of the applicant or representative is required in accordance with CFR 1.33, 10.18. Please see CFR 1.4(d) for the form of the signature.

Signature	/Breton G. Graham/	Date (YYYY-MM-DD)	2010-10-27
Name/Print	Breton G. Graham	Registration Number	48149

This collection of information is required by 37 CFR 1.97 and 1.98. The information is required to obtain or retain a benefit by the public which is to file (and by the USPTO to process) an application. Confidentiality is governed by 35 U.S.C. 122 and 37 CFR 1.14. This collection is estimated to take 1 hour to complete, including gathering, preparing and submitting the completed application form to the USPTO. Time will vary depending upon the individual case. Any comments on the amount of time you require to complete this form and/or suggestions for reducing this burden, should be sent to the Chief Information Officer, U.S. Patent and Trademark Office, U.S. Department of Commerce, P.O. Box 1450, Alexandria, VA 22313-1450. DO NOT SEND FEES OR COMPLETED FORMS TO THIS ADDRESS. **SEND TO: Commissioner for Patents, P.O. Box 1450, Alexandria, VA 22313-1450.**

IN THE UNITED STATES PATENT AND TRADEMARK OFFICE

APPLICANT(S):	Raman K. Rao et al.
APPLICATION NO.:	10/911,211
FILED:	October 13, 2004
TITLE:	Dynamically Configurable IP Based Wireless Device and Wireless Networks
EXAMINER:	David Wang
GROUP ART UNIT:	2617
ATTY.DKT.NO.:	PA5118US

MAIL STOP AMENDMENT
COMMISSIONER FOR PATENTS
P.O. BOX 1450
ALEXANDRIA, VA 22313-1450

SUPPLEMENTAL INFORMATION DISCLOSURE STATEMENT
Under 37 C.F.R. § 1.56, and 1.97-1.98

SIR:

Pursuant to the provisions of 37 C.F.R. §§ 1.56 and 1.97-98 of the Rules of Practice in Patent Cases, enclosed herewith is form PTO-SB-08, listing several references. The Examiner is requested to make these references of official record in the application.

The references cited may be material to examination of the application and are submitted in compliance with the Applicants' duty of disclosure as defined by 37 C.F.R. § 1.56. Additionally, the Applicants wish to make the Examiner aware of, and invite the Examiner to consider, as is appropriate, the following Office Actions from the following U.S. patent application:

- Office Action mailed December 29, 2004 in U.S. patent application 09/591,381, filed June 9, 2000.

- Office Action mailed November 28, 2007 in U.S. patent application 09/591,381, filed June 9, 2000.

No representation is made or intended as to the completeness of this list, nor is the inclusion of any reference on this list an admission that it is prior art or pertinent to this application.

The Commissioner is hereby authorized to charge any necessary fee to Account Number 06-0600.

Respectfully submitted,
Raman K. Rao et al.

October 27, 2010

By: /Breton G. Graham/

Breton G. Graham, Reg. No. 48,149
Carr & Ferrell *LLP*
2200 Geng Road
Palo Alto, CA 94303
TEL: (650) 812-3400
FAX: (650) 812-3444

Electronic Acknowledgement Receipt

EFS ID:	8712756
Application Number:	10911211
International Application Number:	
Confirmation Number:	7409
Title of Invention:	Dynamically configurable IP based wireless device and wireless networks
First Named Inventor/Applicant Name:	Raman K. Rao
Customer Number:	22830
Filer:	Breton Geoffrey Graham
Filer Authorized By:	
Attorney Docket Number:	PA5118US
Receipt Date:	27-OCT-2010
Filing Date:	13-OCT-2004
Time Stamp:	17:55:49
Application Type:	Utility under 35 USC 111(a)

Payment information:

Submitted with Payment	no

File Listing:

Document Number	Document Description	File Name	File Size(Bytes)/ Message Digest	Multi Part /.zip	Pages (if appl.)
1	Information Disclosure Statement (IDS) Filed (SB/08)	PA5118US_IDS_SB08.pdf	30461 8e16b582e5119f7025404e18cd64fd065ff41264	no	3

Warnings:	
Information:	

This is not an USPTO supplied IDS fillable form					
2	Transmittal Letter	PA5118US_IDS_Statement.pdf	77218 9ebcc49d660e68e1720815406977daf82c2ce270	no	2
Warnings:					
Information:					
			Total Files Size (in bytes):	107679	

This Acknowledgement Receipt evidences receipt on the noted date by the USPTO of the indicated documents, characterized by the applicant, and including page counts, where applicable. It serves as evidence of receipt similar to a Post Card, as described in MPEP 503.

New Applications Under 35 U.S.C. 111
If a new application is being filed and the application includes the necessary components for a filing date (see 37 CFR 1.53(b)-(d) and MPEP 506), a Filing Receipt (37 CFR 1.54) will be issued in due course and the date shown on this Acknowledgement Receipt will establish the filing date of the application.

National Stage of an International Application under 35 U.S.C. 371
If a timely submission to enter the national stage of an international application is compliant with the conditions of 35 U.S.C. 371 and other applicable requirements a Form PCT/DO/EO/903 indicating acceptance of the application as a national stage submission under 35 U.S.C. 371 will be issued in addition to the Filing Receipt, in due course.

New International Application Filed with the USPTO as a Receiving Office
If a new international application is being filed and the international application includes the necessary components for an international filing date (see PCT Article 11 and MPEP 1810), a Notification of the International Application Number and of the International Filing Date (Form PCT/RO/105) will be issued in due course, subject to prescriptions concerning national security, and the date shown on this Acknowledgement Receipt will establish the international filing date of the application.

UNITED STATES PATENT AND TRADEMARK OFFICE

UNITED STATES DEPARTMENT OF COMMERCE
United States Patent and Trademark Office
Address: COMMISSIONER FOR PATENTS
P.O. Box 1450
Alexandria, Virginia 22313-1450
www.uspto.gov

APPLICATION NO.	FILING DATE	FIRST NAMED INVENTOR	ATTORNEY DOCKET NO.	CONFIRMATION NO.
10/911,211	10/13/2004	Raman K. Rao	PA5118US	7409

22830 7590 01/04/2011

CARR & FERRELL LLP
120 CONSTITUTION DRIVE
MENLO PARK, CA 94025

EXAMINER	
WANG, DAVID	
ART UNIT	PAPER NUMBER
2617	

MAIL DATE	DELIVERY MODE
01/04/2011	PAPER

Please find below and/or attached an Office communication concerning this application or proceeding.

The time period for reply, if any, is set in the attached communication.

Office Action Summary	Application No.	Applicant(s)	
	10/911,211	RAO ET AL.	
	Examiner	Art Unit	
	David Wang	2617	

-- The MAILING DATE of this communication appears on the cover sheet with the correspondence address --

Period for Reply

A SHORTENED STATUTORY PERIOD FOR REPLY IS SET TO EXPIRE 3 MONTH(S) OR THIRTY (30) DAYS, WHICHEVER IS LONGER, FROM THE MAILING DATE OF THIS COMMUNICATION.

- Extensions of time may be available under the provisions of 37 CFR 1.136(a). In no event, however, may a reply be timely filed after SIX (6) MONTHS from the mailing date of this communication.
- If NO period for reply is specified above, the maximum statutory period will apply and will expire SIX (6) MONTHS from the mailing date of this communication.
- Failure to reply within the set or extended period for reply will, by statute, cause the application to become ABANDONED (35 U.S.C. § 133). Any reply received by the Office later than three months after the mailing date of this communication, even if timely filed, may reduce any earned patent term adjustment. See 37 CFR 1.704(b).

Status

1)☒ Responsive to communication(s) filed on *20 January 2010*.

2a)☐ This action is **FINAL**. 2b)☒ This action is non-final.

3)☐ Since this application is in condition for allowance except for formal matters, prosecution as to the merits is closed in accordance with the practice under *Ex parte Quayle*, 1935 C.D. 11, 453 O.G. 213.

Disposition of Claims

4)☒ Claim(s) *36-38* is/are pending in the application.

4a) Of the above claim(s) _____ is/are withdrawn from consideration.

5)☐ Claim(s) _____ is/are allowed.

6)☒ Claim(s) *36-38* is/are rejected.

7)☐ Claim(s) _____ is/are objected to.

8)☐ Claim(s) _____ are subject to restriction and/or election requirement.

Application Papers

9)☐ The specification is objected to by the Examiner.

10)☒ The drawing(s) filed on *13 October 2004* is/are: a)☐ accepted or b)☒ objected to by the Examiner.

Applicant may not request that any objection to the drawing(s) be held in abeyance. See 37 CFR 1.85(a).

Replacement drawing sheet(s) including the correction is required if the drawing(s) is objected to. See 37 CFR 1.121(d).

11)☐ The oath or declaration is objected to by the Examiner. Note the attached Office Action or form PTO-152.

Priority under 35 U.S.C. § 119

12)☐ Acknowledgment is made of a claim for foreign priority under 35 U.S.C. § 119(a)-(d) or (f).

a)☐ All b)☐ Some * c)☐ None of:

1.☐ Certified copies of the priority documents have been received.

2.☐ Certified copies of the priority documents have been received in Application No. _____.

3.☐ Copies of the certified copies of the priority documents have been received in this National Stage application from the International Bureau (PCT Rule 17.2(a)).

* See the attached detailed Office action for a list of the certified copies not received.

Attachment(s)

1) ☒ Notice of References Cited (PTO-892)
2) ☐ Notice of Draftsperson's Patent Drawing Review (PTO-948)
3) ☒ Information Disclosure Statement(s) (PTO/SB/08) Paper No(s)/Mail Date *27 October 2010*.
4) ☐ Interview Summary (PTO-413) Paper No(s)/Mail Date. _____ .
5) ☐ Notice of Informal Patent Application
6) ☐ Other: _____.

NON-FINAL REJECTION

Drawings

1. The drawings are objected to under 37 CFR 1.83(a). The drawings must show every feature of the invention specified in the claims. Therefore, “functional instruction sets, content, MD configuration software, remote TV controller, dynamic reconfiguration, macro command, IP environment, GPS system, watchdog or sleep mode" must be shown or the feature(s) canceled from the claim(s). These limitations are not found in the original drawings of the parent case in 09/591,381 that was filed 9 June 2000. No new matter should be entered.

Corrected drawing sheets in compliance with 37 CFR 1.121(d) are required in reply to the Office action to avoid abandonment of the application. Any amended replacement drawing sheet should include all of the figures appearing on the immediate prior version of the sheet, even if only one figure is being amended. The figure or figure number of an amended drawing should not be labeled as “amended.” If a drawing figure is to be canceled, the appropriate figure must be removed from the replacement sheet, and where necessary, the remaining figures must be renumbered and appropriate changes made to the brief description of the several views of the drawings for consistency. Additional replacement sheets may be necessary to show the renumbering of the remaining figures. Each drawing sheet submitted after the filing date of an application must be labeled in the top margin as either “Replacement Sheet” or “New Sheet” pursuant to 37 CFR 1.121(d). If the changes are not accepted by the examiner,

the applicant will be notified and informed of any required corrective action in the next Office action. The objection to the drawings will not be held in abeyance.

Response to Amendment

Claim Rejections - 35 USC § 112

2. The following is a quotation of the first paragraph of 35 U.S.C. 112:

> The specification shall contain a written description of the invention, and of the manner and process of making and using it, in such full, clear, concise, and exact terms as to enable any person skilled in the art to which it pertains, or with which it is most nearly connected, to make and use the same and shall set forth the best mode contemplated by the inventor of carrying out his invention.

3. Claim 38 rejected under 35 U.S.C. 112, first paragraph, as failing to comply with the written description requirement. The claim(s) contains subject matter which was not described in the specification in such a way as to reasonably convey to one skilled in the relevant art that the inventor(s), at the time the application was filed, had possession of the claimed invention. The “watchdog or sleep mode" could not be found in the original specification of the parent case in 09/591,381 that was filed 9 June 2000.

Claim Rejections - 35 USC § 103

4. The following is a quotation of 35 U.S.C. 103(a) which forms the basis for all obviousness rejections set forth in this Office action:

> (a) A patent may not be obtained though the invention is not identically disclosed or described as set forth in section 102 of this title, if the differences between the subject matter sought to be patented and the prior art are such that the subject matter as a whole would have been obvious at the time the invention was made to a person having ordinary skill in the art to which said subject matter pertains. Patentability shall not be negatived by the manner in which the invention was made.

5. The factual inquiries set forth in *Graham* **v.** *John Deere Co.*, 383 U.S. 1, 148 USPQ 459 (1966), that are applied for establishing a background for determining obviousness under 35 U.S.C. 103(a) are summarized as follows:

1. Determining the scope and contents of the prior art.
2. Ascertaining the differences between the prior art and the claims at issue.
3. Resolving the level of ordinary skill in the pertinent art.
4. Considering objective evidence present in the application indicating obviousness or nonobviousness.

6. Claim 36 rejected under 35 U.S.C. 103(a) as being unpatentable over Zilliacus et al. (US 6,832,230 B1) in view of Shen et al. (US 6,401,059 B1) and Watts et al. (US 6,119,186) and Nelakanti et al. (US 6,993,359 B1).

7. Re claim 36, Zilliacus teaches:

Storing data on a server (application database, Zilliacus et al. Fig. 2), the data comprising a plurality of functional instruction sets (application, Zilliacus et al. Fig. 2), content (applications provide content like games, Zilliacus et al. c1 65-6), and MD configuration software (license, Zilliacus et al. Fig. 2).

Zilliacus further teaches:

Executing a dynamic reconfiguration of the MD using **one of**,

The processing and storage capabilities of the MD;

The processing and storage capabilities of the server; and

Processing and storage capabilities of the MD in conjunction with processing and storage capabilities of the server (mobile device is dynamically

reconfigured when a new application is installed, hence processed, on the device from a storage device contained on a server, Zilliacus et al. Fig. 2);

The prior art teaches a cell phone. The prior art also teaches a method to download software onto a mobile device, similar to the applicant's claims of "requesting mode configuration of the server." But the prior art does not specifically teach "The MD remotely requesting a mode configuration of the server, wherein the server configures the MD as **one or more** of a plurality of intelligent devices comprising a cell phone, a remote TV controller, and a remote controller of a plurality of devices." However, Shen teaches a remote TV controller application on a mobile device (Shen et al. abstract).

Shen is analogous to the prior art, because Shen similarly teaches downloading applications to a mobile device. Thus, it would have been obvious to a person having ordinary skill in the art to download an application to a mobile device (by the prior art), in which the application is an tv remote controller (by Shen). The combination is a convergence of mobile devices and simplifies the number of remote control devices.

Shen further teaches that once an application, like a tv remote controller, is downloaded onto a portable computer, like a mobile device, the device is configured:

Configuring the MD for a selected set of functions including communication (device is able to communicate with a TV and/or VCR, Shen et al. Fig. 2), computation (Shen teaches a CPU, and hence teaches computation required to execute commands, Shen et al. Fig. 1A), command (instructions for remote control, Shen et al. c3 16-29),

sensing (a PDA has different sensors for communication, user input, microphone, even sensing the current time; Shen teaches sensing user input in order to send a remote control command, Shen et al. c3 16-44) and control (remote devices like a TV and VCR are remotely controlled, Shen et al. Fig. 2);

Establishing the plurality of functional instructions for dynamic reconfiguration of the MD from one of the selected sets of functions to another (a mobile device, like a PDA, can perform different functions like a calendar, email, address book, and memo pad, Shen et al. c1 11-18). A mobile device is "dynamically reconfigured" when a new application is loaded onto the device.

Shen further teaches :

Alternatively accessing one of the plurality of functional instruction sets (application) from a storage device on the MD (different applications can be executed on a mobile device like a PDA, Shen et al. c1 11-18), wherein the storage device comprises at least one lookup table (like an array or data structure, like XML, of a program schedule stored on a mobile device, Shen et al. Fig. 3 and c2 51-65);

Shen further teaches:

The MD downloading from the server a macro command (downloading IR control information from the Internet, Shen et al. c3 45-51), wherein the macro command enables the MD to control a specific intelligent device (IR control information, Shen et al. c3 45-51).

The prior art teaches operating a device in a plurality of environments, such as when switching applications. But the prior art does not specifically teach "The MD dynamically reconfiguring to transmit and receive in a plurality of environments, comprising an office environment, a home environment." However, Watts teaches reconfiguring a computing device, like a mobile device, from an office environment to a home environment (Watts et al. c10 51-65). Watts also teaches reconfiguring transmitting/receiving with other devices depending on the environment (Watts et al. c13 20-34).

Watts is analogous to the prior art, because Watts similarly teaches "dynamic reconfiguration." Therefore, it would have been obvious to a person having ordinary skill in the art to reconfigure a computing device based on the operating environment (by Watts) in which the computing device is a mobile device (by prior art). The combination allows a computing device to change according to different environmental conditions (Watts et al. abstract).

Watts further teaches:

The MD sensing an environment the MD is primarily operating in (via an "informant" like GPS, Watts et al. c3 65-41), and maintaining an ability to switch instantaneously to a different environment (reconfiguring a computer to be operate from an work office desktop to a home office desktop, Watts et al. c10 51-65).

The prior art teaches reconfiguring between different environments, like between an office and home environment. But the prior art does not specifically teach "dynamically reconfiguring" in environments comprising "an Internet protocol (IP) environment, and a plurality of public carrier environments." However, Nelakanti teaches dynamically reconfiguring to transmit and receive in an IP environment (private wireless IP network) and a public carrier environment (public network such as GSM or PSTN) for the purpose of handover (Nelakanti et al. abstract). Therefore, it would have been obvious to a person having ordinary skill in the art to "dynamically reconfigure" a mobile device in different environments (by prior art), such as an IP environment and a public carrier environment (by Nelakanti). The combination allows a mobile device to handoff communications between networks (Nelakanti et al. title).

8. Claim 37 rejected under 35 U.S.C. 103(a) as being unpatentable over Zilliacus et al. (US 6,832,230 B1) in view of Shen et al. (US 6,401,059 B1) and Watts et al. (US 6,119,186) and Nelakanti et al. (US 6,993,359 B1) and Dunn et al. (US 6,591,103 B1).

9. Re claim 37, please see the rejection of similar claim 36. The additional limitations are addressed below.

Watts further teaches:

A Global Positioning System unit that allows the MD to know its exact location, wherein the exact location of the MD Is used for a plurality of functions (GPS "informant" are used in an environment manager aware application program, Watts et al. c3 65-41).

The prior art teaches using location information to perform various functions, but the prior art may not exactly state using location data for "sensing one or more networks." However, Dunn teaches using GPS location data to find a network (Dunn et al. abstract).

Dunn is analogous to the prior art, because Dunn similarly teaches a location based service. Thus, it would have been obvious to a person having ordinary skill in the art to using location data from GPS (by prior art) to sense one or more networks (by Dunn). The combination allows a mobile device to be dynamically reconfigured in different network environments and locations.

10. Claim 38 rejected under 35 U.S.C. 103(a) as being unpatentable over Zilliacus et al. (US 6,832,230 B1) in view of Shen et al. (US 6,401,059 B1) and Watts et al. (US 6,119,186) and Nelakanti et al. (US 6,993,359 B1).

11. Re claim 38, please see the rejection of similar claim 36. The additional limitations are addressed below.

Nelakanti further teaches:

Wherein communication protocols configure the mobile communication system for communication (GSM, PSTN, ISDN, IP protocols, etc. configure a communication system for communication, Nelakanti et al. abstract);

Wherein the MD is dynamically tuned for transmit and receive functions suitable for each environment (such as switching from one set of frequencies in a cell to another set of frequencies in a different cell during handover, Nelakanti et al. c7 23-48);

The MD configured to bypass a public wireless carrier service when the public wireless carrier service is not required for communication (handover between public and private networks, Nelakanti et al. abstract).

Watts further teaches:

Wherein the MD is configured to be in a watchdog OR sleep mode in different environments (shutting down unnecessary systems and software based on environment, like being on an airplane, Watts et al. c11 51-67).

Response to Arguments

12. Applicant's arguments with respect to claims 36-37 have been considered but are moot in view of the new ground(s) of rejection.

13. While the previous rejection still reads on the claims, it is believed that the new rejection more closely resembles the applicant's invention based on the applicant's most recent response.

Conclusion

Any inquiry concerning this communication or earlier communications from the examiner should be directed to David Wang whose telephone number is (571)270-1214. The examiner can normally be reached on M - F 10 AM - 4 PM EST.

If attempts to reach the examiner by telephone are unsuccessful, the examiner's supervisor, Patrick Edouard can be reached on 571.272.7603. The fax phone number for the organization where this application or proceeding is assigned is 571-273-8300.

Information regarding the status of an application may be obtained from the Patent Application Information Retrieval (PAIR) system. Status information for published applications may be obtained from either Private PAIR or Public PAIR. Status information for unpublished applications is available through Private PAIR only. For more information about the PAIR system, see http://pair-direct.uspto.gov. Should you have questions on access to the Private PAIR system, contact the Electronic Business Center (EBC) at 866-217-9197 (toll-free). If you would like assistance from a USPTO Customer Service Representative or access to the automated information system, call 800-786-9199 (IN USA OR CANADA) or 571-272-1000.

/David Wang/
Examiner, Art Unit 2617
3 December 2010
/Patrick N. Edouard/
Supervisory Patent Examiner, Art Unit 2617

Notice of References Cited	Application/Control No. 10/911,211	Applicant(s)/Patent Under Reexamination RAO ET AL.	
	Examiner David Wang	Art Unit 2617	Page 1 of 1

U.S. PATENT DOCUMENTS

*		Document Number Country Code-Number-Kind Code	Date MM-YYYY	Name	Classification
*	A	US-6,119,186 A	09-2000	Watts et al.	710/104
*	B	US-6,401,059 B1	06-2002	Shen et al.	703/27
*	C	US-6,591,103 B1	07-2003	Dunn et al.	455/436
*	D	US-6,832,230 B1	12-2004	Zilliacus et al.	455/414.3
*	E	US-6,993,359 B1	01-2006	Nelakanti et al.	455/554.1
	F	US-			
	G	US-			
	H	US-			
	I	US-			
	J	US-			
	K	US-			
	L	US-			
	M	US-			

FOREIGN PATENT DOCUMENTS

*		Document Number Country Code-Number-Kind Code	Date MM-YYYY	Country	Name	Classification
	N					
	O					
	P					
	Q					
	R					
	S					
	T					

NON-PATENT DOCUMENTS

*		Include as applicable: Author, Title Date, Publisher, Edition or Volume, Pertinent Pages)
	U	
	V	
	W	
	X	

*A copy of this reference is not being furnished with this Office action. (See MPEP § 707.05(a).)
Dates in MM-YYYY format are publication dates. Classifications may be US or foreign.

Index of Claims	Application/Control No.	Applicant(s)/Patent Under Reexamination
1091121 1	10911211	RAO ET AL.
	Examiner	Art Unit
	DAVID WANG	2617

✓	Rejected	-	Cancelled	N	Non-Elected	A	Appeal
=	Allowed	÷	Restricted	I	Interference	O	Objected

☐ Claims renumbered in the same order as presented by applicant ☐ CPA ☐ T.D. ☐ R.1.47

CLAIM		DATE								
Final	Original	03/14/2008	12/09/2010							
	1	-	-							
	2	-	-							
	3	-	-							
	4	-	-							
	5	-	-							
	6	-	-							
	7	-	-							
	8	-	-							
	9	-	-							
	10	-	-							
	11	-	-							
	12	-	-							
	13	-	-							
	14	-	-							
	15	-	-							
	16	-	-							
	17	-	-							
	18	-	-							
	19	-	-							
	20	-	-							
	21	-	-							
	22	-	-							
	23	-	-							
	24	-	-							
	25	-	-							
	26	-	-							
	27	-	-							
	28	-	-							
	29	-	-							
	30	-	-							
	31	-	-							
	32	-	-							
	33	-	-							

Index of Claims	Application/Control No.	Applicant(s)/Patent Under Reexamination
10911211 1	10911211	RAO ET AL.
	Examiner	Art Unit
	DAVID WANG	2617

✓	Rejected	-	Cancelled	N	Non-Elected	A	Appeal
=	Allowed	÷	Restricted	I	Interference	O	Objected

☐ Claims renumbered in the same order as presented by applicant ☐ CPA ☐ T.D. ☐ R.1.47

CLAIM		DATE								
Final	Original	03/14/2008	12/09/2010							
	34	-	-							
	35	-	-							
	36	✓	✓							
	37	✓	✓							
	38		✓							

Search Notes	Application/Control No.	Applicant(s)/Patent Under Reexamination
10911211	10911211	RAO ET AL.
	Examiner	**Art Unit**
	DAVID WANG	2617

SEARCHED			
Class	**Subclass**	**Date**	**Examiner**
455	461	3/14/2008	DW
709	221	3/14/2008	DW
710	104	3/14/2008	DW

SEARCH NOTES		
Search Notes	**Date**	**Examiner**
please see attached	3/14/2008	DW
consulted Duc Nguyen SPE regarding the use of the Logitech Harmony remote controller	3/11/2008	DW
google search for "(buy OR purchase) applications from mobile phone"	12/3/2010	DW
google search for "finding network with GPS location" and "(detecting OR sensing) (home OR office OR work) environment GPS"	12/9/2010	DW
consulted Huy Phan	12/9/2010	DW

INTERFERENCE SEARCH			
Class	**Subclass**	**Date**	**Examiner**

PTO/SB/08a (01-10)
Approved for use through 07/31/2012. OMB 0651-0031
U.S. Patent and Trademark Office; U.S. DEPARTMENT OF COMMERCE

Under the Paperwork Reduction Act of 1995, no persons are required to respond to a collection of information unless it contains a valid OMB control number.

INFORMATION DISCLOSURE STATEMENT BY APPLICANT

(Not for submission under 37 CFR 1.99)

Application Number	10911211
Filing Date	2004-10-13
First Named Inventor	Raman K. Rao
Art Unit	2617
Examiner Name	David Wang
Attorney Docket Number	PA5118US

U.S.PATENTS

Examiner Initial*	Cite No	Patent Number	Kind Code[1]	Issue Date	Name of Patentee or Applicant of cited Document	Pages,Columns,Lines where Relevant Passages or Relevant Figures Appear
	1	6421429		2002-07-16	Merritt et al.	
	2	6826405		2004-11-30	Doviak et al.	
	3	7286658		2007-10-23	Henderson	

If you wish to add additional U.S. Patent citation information please click the Add button.

U.S.PATENT APPLICATION PUBLICATIONS

Examiner Initial*	Cite No	Publication Number	Kind Code[1]	Publication Date	Name of Patentee or Applicant of cited Document	Pages,Columns,Lines where Relevant Passages or Relevant Figures Appear
	1					

If you wish to add additional U.S. Published Application citation information please click the Add button.

FOREIGN PATENT DOCUMENTS

Examiner Initial*	Cite No	Foreign Document Number[3]	Country Code[2] i	Kind Code[4]	Publication Date	Name of Patentee or Applicant of cited Document	Pages,Columns,Lines where Relevant Passages or Relevant Figures Appear	T[5]
	1							☐

EFS Web 2.1.17

ALL REFERENCES CONSIDERED EXCEPT WHERE LINED THROUGH. /DW/

INFORMATION DISCLOSURE STATEMENT BY APPLICANT (**Not for submission under 37 CFR 1.99)**		
	Application Number	10911211
	Filing Date	2004-10-13
	First Named Inventor	Raman K. Rao
	Art Unit	2617
	Examiner Name	David Wang
	Attorney Docket Number	PA5118US

If you wish to add additional Foreign Patent Document citation information please click the Add button			
NON-PATENT LITERATURE DOCUMENTS			
Examiner Initials*	Cite No	Include name of the author (in CAPITAL LETTERS), title of the article (when appropriate), title of the item (book, magazine, journal, serial, symposium, catalog, etc), date, pages(s), volume-issue number(s), publisher, city and/or country where published.	T[5]
	1		☐
If you wish to add additional non-patent literature document citation information please click the Add button			

EXAMINER SIGNATURE			
Examiner Signature	/David Wang/	Date Considered	11/12/2010

*EXAMINER: Initial if reference considered, whether or not citation is in conformance with MPEP 609. Draw line through a citation if not in conformance and not considered. Include copy of this form with next communication to applicant.

[1] See Kind Codes of USPTO Patent Documents at www.USPTO.GOV or MPEP 901.04. [2] Enter office that issued the document, by the two-letter code (WIPO Standard ST.3). [3] For Japanese patent documents, the indication of the year of the reign of the Emperor must precede the serial number of the patent document. [4] Kind of document by the appropriate symbols as indicated on the document under WIPO Standard ST.16 if possible. [5] Applicant is to place a check mark here if English language translation is attached.

ALL REFERENCES CONSIDERED EXCEPT WHERE LINED THROUGH. /DW/

EAST Search History

EAST Search History (Prior Art)

Ref #	Hits	Search Query	DBs	Default Operator	Plurals	Time Stamp
L1	119	(home and office) with (detect $4 sens$4) with (location environment) and "GPS"	US-PGPUB; USPAT; FPRS; EPO; JPO; IBM_TDB	OR	ON	2010/12/09 11:10
L2	15383465	(@ad<"20000609" @pd<"20000609" @rlad<"20000609")	US-PGPUB; USPAT; FPRS; EPO; JPO; IBM_TDB	OR	ON	2010/12/09 11:10
L4	8	1 and 2	US-PGPUB; USPAT; FPRS; EPO; JPO; IBM_TDB	OR	ON	2010/12/09 11:11
L5	215	(home and (office work)) with (detect$4 sens$4) with (location environment) and "GPS"	US-PGPUB; USPAT; FPRS; EPO; JPO; IBM_TDB	OR	ON	2010/12/09 11:16
L6	16	2 and 5	US-PGPUB; USPAT; FPRS; EPO; JPO; IBM_TDB	OR	ON	2010/12/09 11:17
L7	72	(("IP" voip) and (cell cellular (public near carrier))) with (detect$4 sens$4) with (location environment) and "GPS"	US-PGPUB; USPAT; FPRS; EPO; JPO; IBM_TDB	OR	ON	2010/12/09 12:32
L8	3	2 and 7	US-PGPUB; USPAT; FPRS; EPO; JPO; IBM_TDB	OR	ON	2010/12/09 12:32
L9	104	(("IP" voip) and (cell cellular (public near carrier))) with (detect$4 sens$4) with (location environment)	US-PGPUB; USPAT; FPRS; EPO; JPO; IBM_TDB	OR	ON	2010/12/09 12:36
L10	4	2 and 9	US-PGPUB; USPAT; FPRS; EPO; JPO; IBM_TDB	OR	ON	2010/12/09 12:36
L11	2429	(("IP" voip) and (cell cellular (public near carrier))) with (location environment) and "GPS"	US-PGPUB; USPAT; FPRS; EPO; JPO; IBM_TDB	OR	ON	2010/12/09 12:37
L12	362	2 and 11	US-PGPUB; USPAT; FPRS; EPO; JPO; IBM_TDB	OR	ON	2010/12/09 12:37

L13	428	((voip) and (cell cellular (public near carrier))) with (location environment) and "GPS"	US-PGPUB; USPAT; FPRS; EPO; JPO; IBM_TDB	OR	ON	2010/12/09 12:37
L14	17	2 and 13	US-PGPUB; USPAT; FPRS; EPO; JPO; IBM_TDB	OR	ON	2010/12/09 12:37
L15	2	09/561100	US-PGPUB; USPAT; FPRS; EPO; JPO; IBM_TDB	OR	ON	2010/12/09 12:44
L16	1	09/073371	US-PGPUB; USPAT; FPRS; EPO; JPO; IBM_TDB	OR	ON	2010/12/09 12:44
L17	3736	455/414.2 455/456.5	US-PGPUB; USPAT; FPRS; EPO; JPO; IBM_TDB	OR	ON	2010/12/09 14:33
L18	626	l17 and (search$4 sens$4 scan$4) with (network)	US-PGPUB; USPAT; FPRS; EPO; JPO; IBM_TDB	OR	ON	2010/12/09 14:33
L19	58	l2 and l18	US-PGPUB; USPAT; FPRS; EPO; JPO; IBM_TDB	OR	ON	2010/12/09 14:33
L20	367	l17 and (search$4 sens$4 scan$4) with (network) and "GPS"	US-PGPUB; USPAT; FPRS; EPO; JPO; IBM_TDB	OR	ON	2010/12/09 14:33
L21	34	l2 and l20	US-PGPUB; USPAT; FPRS; EPO; JPO; IBM_TDB	OR	ON	2010/12/09 14:34
L22	8166	locat$4 with network with GPS	US-PGPUB; USPAT; FPRS; EPO; JPO; IBM_TDB	OR	ON	2010/12/09 14:50
L23	952	2 and 22	US-PGPUB; USPAT; FPRS; EPO; JPO; IBM_TDB	OR	ON	2010/12/09 14:50
L25	4930	locat$4 with (wireless mobile cellular) with network with GPS	US-PGPUB; USPAT; FPRS; EPO; JPO; IBM_TDB	OR	ON	2010/12/09 14:51
L26	224	locat$4 with (wireless mobile cellular) with network with (environment profile setting) with GPS	US-PGPUB; USPAT; FPRS; EPO; JPO; IBM_TDB	OR	ON	2010/12/09 14:51

L27	13	2 and 26	US-PGPUB; USPAT; FPRS; EPO; JPO; IBM_TDB	OR	ON	2010/12/09 14:51
L28	372	locat$4 with network with (environment profile setting) with GPS	US-PGPUB; USPAT; FPRS; EPO; JPO; IBM_TDB	OR	ON	2010/12/09 14:54
L29	48	2 and 28	US-PGPUB; USPAT; FPRS; EPO; JPO; IBM_TDB	OR	ON	2010/12/09 14:54
L30	35	29 not 27	US-PGPUB; USPAT; FPRS; EPO; JPO; IBM_TDB	OR	ON	2010/12/09 14:54
L31	2	"6819267".pn. "6591103".pn.	US-PGPUB; USPAT; FPRS; EPO; JPO; IBM_TDB	OR	ON	2010/12/09 15:45
S1	0	10/911211	US-PGPUB; USPAT; FPRS; EPO; JPO; IBM_TDB	OR	ON	2010/11/19 17:51
S2	161	network with (profile presence) same (office and home and "IP")	US-PGPUB; USPAT; FPRS; EPO; JPO; IBM_TDB	OR	ON	2010/11/19 17:56
S3	8	sens$4 with network with (profile presence environment) same (office and home and "IP")	US-PGPUB; USPAT; FPRS; EPO; JPO; IBM_TDB	OR	ON	2010/11/19 18:07
S4	12	sens$4 with network with (profile presence environment) and (roam$4 switch$4) with (office and home and "IP")	US-PGPUB; USPAT; FPRS; EPO; JPO; IBM_TDB	OR	ON	2010/11/19 18:08
S5	2	10/077273	US-PGPUB; USPAT; FPRS; EPO; JPO; IBM_TDB	OR	ON	2010/11/24 16:02
S6	3	"6421429".pn. "6826405".pn. "7286658".pn.	US-PGPUB; USPAT; FPRS; EPO; JPO; IBM_TDB	OR	ON	2010/12/03 17:26
S7	0	10/911211	US-PGPUB; USPAT; FPRS; EPO; JPO; IBM_TDB	OR	ON	2010/12/03 17:28
S8	3	10/682312	US-PGPUB; USPAT; FPRS; EPO; JPO; IBM_TDB	OR	ON	2010/12/03 17:52

S9	1	"6832230".pn.	US-PGPUB; USPAT; FPRS; EPO; JPO; IBM_TDB	OR	ON	2010/12/06 17:29
S10	1	"6401059".pn.	US-PGPUB; USPAT; FPRS; EPO; JPO; IBM_TDB	OR	ON	2010/12/06 17:37
S11	1	"5903259".pn.	US-PGPUB; USPAT; FPRS; EPO; JPO; IBM_TDB	OR	ON	2010/12/06 17:44

EAST Search History (Interference)

< This search history is empty>

12/9/2010 5:22:25 PM
C:\Documents and Settings\dwang\My Documents\EAST\Workspaces\10 911211 v3.wsp

IN THE UNITED STATES PATENT AND TRADEMARK OFFICE

APPLICANTS:	Raman K. Rao et al.
APPLICATION NO.:	10/911,211
FILING DATE:	October 13, 2004
TITLE:	Dynamically Configurable IP Based Wireless Device and Wireless Networks
EXAMINER:	Patrick Nestor Edouard
ART UNIT:	2617
CONF. NO:	7409
ATTY. DKT. NO.:	PA5118US

MAIL STOP AMENDMENT
COMMISSIONER FOR PATENTS
P.O. BOX 1450
ALEXANDRIA, VA 22313-1450

RESPONSE C

Sir:

In response to the non-final Office Action mailed January 4, 2011 (*Office Action*), please consider the following amendments and arguments. The Applicants' **amendments**, **remarks**, and **conclusions** begin on **pages two**, **nine**, and **fourteen**, respectively. The requisite fee for an extension of time up to the current date is included herewith.

Amendments to the Specification

Please replace the paragraph of page 3, line 23 to page 4, line 4 of the specification as originally filed with the following amended paragraph:

The system of the present invention, including a wireless device forming a part of the system can work with, for example, GPS, or with public wireless location systems, to improve locating capabilities. For instance, since both the home and office network units/boxes are at known locations, tuning a CT/MD for operation as a GPS receiver, or other locating system, to the network units/boxes would give a precise location with respect to the home or office units/boxes. There are two possible locations for only two stations. Normally, therefore, three stations are required, but in many cases, for a CT/MD, one of the two locations is known to be invalid. For example, the location is known well enough to automatically rule out one location. In this case, the location will be precisely known from only the office and home network boxes, or from these units/boxes with respect to a public wireless station, or with respect to a satellite, or both. This software based configuration of (or configuration software for) the CT/MD (282 shown in Figure 2A) is available from the network, such as from a server C located on the Internet that enables dynamic reconfiguration anywhere in the world for a CT/MD.

Please replace the paragraph of page 4, lines 5-9 of the specification with the following amended paragraph:

The MD is able to sense which environment it is primarily operating in at a given moment while maintaining the ability to switch instantaneously to a different environment. It has the ability to be in a watchdog or sleep mode (286 shown in Figure 2A) in different environments while very active in a given environment at a particular time. This allows the MD to be very useful in one or more environments as the use dictates.

Ex.1002
APPLE INC. / Page 258 of 610

Please replace the paragraph of page 7, lines 21-24 of the specification with the following amended paragraph:

In a similar fashion as described above, the CT/MD 202 may serve as a remote controller for various IP based intelligent wireless or wired home appliances 266. The TV may be controlled using the cell phone if the TV set is capable of receiving wireless commands. Opening the garage door may be done with a macro command 284 downloaded from the Central Server C 214.

Please replace the paragraph of page 8, lines 11-15 of the specification with the following amended paragraph:

i) The CT 202 wishes to be in the primary mode of the local wireless office loop 230 whereas it is currently in the public carrier wireless loop 200. A request, menu or macro command 284 is chosen by the CT 202 and a request for reconfiguration is sent to the Server C 214 via the wireless Internet 204 using frequency Fp and utilizing a public carrier 208.

Please replace the paragraph of page 12, line 29 to page 13, line 2 of the specification with the following amended paragraph:

In a similar fashion as described above, the CT/MD may also serve as a remote controller for various IP based intelligent wireless or wired home appliances. The TV may be controlled using the cell phone if the TV set is capable of receiving wireless commands/output. The electronic garage door opener may be a macro command 284 downloaded from the Central Server C.

In the Claims

This listing of claims will replace all prior versions, and listings, of claims in the application.

1-35. (Canceled).

36. (Currently Amended) In a mobile communication system, a method for configuring a mobile communication device (MD), the method comprising:

storing data on a server, the data comprising a plurality of functional instruction sets, content, and MD configuration software;

the MD remotely requesting a mode configuration of the server, wherein the server configures the MD as one or more of a plurality of intelligent devices comprising a cell phone, a remote TV controller, and a remote controller of a plurality of devices;

configuring the MD for a selected set of functions including communication, computation, command, sensing and control;

establishing the plurality of functional instructions for dynamic reconfiguration of the MD from one of the selected sets of functions to another;

alternatively accessing one of the plurality of functional instruction sets from a storage device on the MD, wherein the storage device comprises at least one lookup table;

executing a dynamic reconfiguration of the MD using one of,

the processing and storage capabilities of the MD;

the processing and storage capabilities of the server; and

processing and storage capabilities of the MD in conjunction with the processing and storage capabilities of the server;

the MD downloading from the server a macro command, wherein the macro command enables the MD to control a specific intelligent device;

Ex.1002
APPLE INC. / Page 260 of 610

the MD dynamically reconfiguring to transmit and receive in a plurality of environments, comprising an office environment, a home environment, an Internet protocol (IP) environment, and a plurality of public carrier environments; and

the MD sensing an environment the MD is primarily operating in, and maintaining an ability to switch instantaneously to a different environment.

37. (Currently Amended) A system for dynamically configuring a mobile communication device (MD), the system comprising:

a server comprising storage means for storing data, the data comprising a plurality of functional instruction sets, content, and MD configuration software;

at least one dynamically configurable MD communicatively coupled to the server, wherein the MD is configurable to remotely request a mode configuration of the server, wherein the server configures the MD as one or more of a plurality of intelligent devices comprising a cell phone, a remote TV controller, and a remote controller of a plurality of devices;

means for configuring the MD for a selected set of functions including communication, computation, command, sensing and control;

means for establishing the plurality of functional instructions for dynamic reconfiguration of the MD from one of the selected sets of functions to another;

means for alternatively accessing one of the plurality of functional instruction sets from a storage device on the MD, wherein the storage device comprises at least one lookup table;

means for executing a dynamic reconfiguration of the MD using one of,

the processing and storage capabilities of the MD;

the processing and storage capabilities of the server; and

processing and storage capabilities of the MD in conjunction with the processing and storage capabilities of the server;

means for the MD to download from the server a macro command, wherein the macro command enables the MD to control a specific intelligent device;

means for dynamically reconfiguring the MD to transmit and receive in a plurality of environments, comprising an office environment, a home environment, an Internet protocol (IP) environment, and a plurality of public carrier environments; ~~and~~

means for the MD to sense an environment the MD is primarily operating in, and maintaining an ability to switch instantaneously to a different environment; and

a Global Positioning System unit that allows the MD to know its exact location, wherein the exact location of the MD is used for a plurality of functions, including sensing one or more networks.

38. (Previously Presented) A method for dynamically configuring a mobile communication device (MD) in a mobile communication system, the method comprising:

storing data on a server, the data comprising a plurality of functional instruction sets, content, and MD configuration software;

the MD remotely requesting a mode configuration of the server, wherein the server configures the MD as one or more of a plurality of intelligent devices comprising a cell phone, a remote TV controller, and a remote controller of a plurality of devices;

configuring the MD for a selected set of functions including communication, computation, command, sensing and control, wherein communication protocols configure the mobile communication system for communication;

establishing the plurality of functional instructions for dynamic reconfiguration of the MD from one of the selected sets of functions to another;

alternatively accessing one of the plurality of functional instruction sets from a storage device on the MD, wherein the storage device comprises at least one lookup table;

executing a dynamic reconfiguration of the MD;

the MD downloading from the server a macro command, wherein the macro command enables the MD to control a specific intelligent device;

the MD dynamically reconfiguring to transmit and receive in a plurality of environments, comprising an office environment, a home environment, an Internet protocol (IP) environment, and a plurality of public carrier environments, wherein the MD is dynamically tuned for transmit and receive functions suitable for each environment;

the MD configured to bypass a public wireless carrier service when the public wireless carrier service is not required for communication; and

the MD sensing an environment the MD is primarily operating in, and maintaining an ability to switch instantaneously to a different environment, wherein the MD is configured to be in a watchdog or sleep mode in different environments.

Amendments to the Figures

The attached sheet of drawings includes changes to Figure 2A. This sheet, which includes Figures 1 and 2A, replaces the original sheet, including Figures 1 and 2A. Figure 2A is amended to add reference numbers 282, 284, and 286.

Ex.1002
APPLE INC. / Page 264 of 610

REMARKS

In the *Office Action*, the Examiner rejected claims 36-38. Based on the foregoing amendments and following remarks, the Applicants respectfully request reconsideration of the pending application (*Instant Application*). No claims are added or canceled by this response. Claims 36 and 37 are amended to correct informalities. No new matter is added.

Amendment to the Specification and Drawings

The drawings were objected to under 37 C.F.R. 1.83(a) for allegedly failing to show every feature of the invention specified in the claims. *Office Action*, 2. The Examiner identified "functional instruction sets, content, MD configuration software, remote TV controller, dynamic reconfiguration, macro command, IP environment, GPS system, watchdog or sleep mode" as not being shown in the drawings of the parent case, application serial number 09/591,381 (*Parent Case*). *Office Action*, 2.

The Applicants note that the drawings and specification in the *Instant Application* are the same as the *Parent Case*. Accordingly, the Applicants have amended Figure 2A to include reference to content, configuration software, macro command, and watchdog or sleep mode. No new matter is added. Support for the amendments may be found at least at page 4, lines 3 and 7; page 7, line 25; page 8, line 13; and page 13, line 2 of the *Parent Case* and the *Instant Application* as originally filed. In addition, page 4, lines 3 and 7; page 7, line 25; page 8, line 13; and page 13, line 2 of the *Instant Application* are amended to include reference numbers for the above features. The Applicants also note that dynamic reconfiguration may be performed and hence represented by MD configuration software as described in the specification. *Parent Case* and *Instant Application*, page 3, line 23 to page 4, line 4.

Ex.1002
APPLE INC. / Page 265 of 610

The Applicants respectfully disagree with the Examiner that the claimed functional instruction sets (FIS), remote TV controller, IP environment, and Global Positioning System (GPS) unit are not shown in the figures of the *Parent Case*. The claimed FIS is represented, for example, by reference number 218 in Figure 2A. The remote TV controller is shown at least at reference number 272 in Figure 2A. The GPS unit is depicted at least by reference number 220 in Figure 2A. The Applicants respectfully request that the objections to the drawing be withdrawn.

Rejection under 112

Claim 38 was rejected under 35 U.S.C. § 112 as failing to comply with the written description requirement. *Office Action*, 3. Specifically, the Examiner contends that "[t]he 'watchdog or sleep mode' could not be found in the original specification of the parent case in 09/591,381 that was filed 9 June 2000." *Office Action*, 3. The Applicants respectfully traverse. The claimed watchdog or sleep mode is described at least at page 4, lines 6-7 and page 9, lines 5-7 in the specification of the parent case. The Applicants respectfully request that the § 112 rejection be withdrawn.

Rejection under 103(a) over *Zilliacus*, *Shen*, *Watts*, and *Nelakanti*

Claim 36 was rejected under 35 U.S.C. § 103(a) as being unpatentable over U.S. Patent No. 6,832,230 (*Zilliacus*) in view of U.S. Patent No. 6,401,059 (*Shen*), and United States Patent No. 6,119,186 (*Watts*), and U.S. Patent No. 6,993,359 (*Nelakanti*). *Office Action*, 4. Claim 37 was rejected under 35 U.S.C. § 103(a) as being unpatentable over *Zilliacus* in view of *Shen* and *Watts* and *Nelakanti* and U.S. Patent No. 6,591,103 (*Dunn*). *Office Action*, 8. Claim 38 was rejected under 35 U.S.C. § 103(a) as being unpatentable over *Zilliacus* in view of *Shen* and *Watts* and *Nelakanti*. *Office Action*, 9. Because the combination of *Zilliacus*, *Shen*, *Watts*, *Nelakanti*, and *Dunn* fails to make obvious each limitation of claims 36-38, the Applicants assert that these claims are patentable over the cited art.

Ex.1002
APPLE INC. / Page 266 of 610

The cited art does not teach or suggest "storing data on a server, the data comprising a plurality of functional instruction sets, content, and MD configuration software."

Claim 37 recites, among other features: "MD configuration software." MD configuration software may operate and control the constituent components of the MD's hardware and may allow the constituent components of the MD's hardware to communicate with each other. *Instant Application*, page 3, lines 11-22. In contrast, *Zilliacus* is merely concerned with controlling the download of application programs based on payments terms.

The Examiner contends that *Zilliacus* discloses the claimed MD configuration software: "(license, *Zilliacus* et al. Fig. 2)." *Office Action*, 4. However, *Zilliacus* teaches that a license only determines how much a user must pay to download an application program:

> If there is a match between the current user identity 220 and user identity information 234 in the database, a further comparison is made to determine the licensing information 236, 238 for the user. The license-database 232 keeps track of a particular users current and past application selections and the lifetime for those applications. If the user previously paid for an unlimited application lifetime the license-database 232 will contain that information. If the user has previously paid for an unlimited lifetime the application is downloaded at block 426 without a reduced fee or without a fee for the application.

Zilliacus, col. 7. lines 35-45.

A license of *Zilliacus* is data and is not executed on a mobile device of *Zilliacus*. *Zilliacus*, col. 7. lines 35-45. In fact, the license database 122 is separate from the mobile device. *Zilliacus*, Figure 1. Clearly, a license of *Zilliacus* is not the claimed MD configuration software. Hence, *Zilliacus* does not teach explicitly or even impliedly the claimed MD configuration software.

Shen does not cure the deficiencies of *Zilliacus*. *Shen* merely teaches using a personal digital assistant as a remote control. *Shen*, col. 3, lines 17-18. As known in the art, *Shen's* emulator is an application program. As understood by one of ordinary skill in the art, application software is designed to help a user perform an activity, such as games, word processors, spreadsheets, and media players. Application software does not manage and integrate a digital device's capabilities. In fact, application software is

typically not allowed access to the platform hardware (e.g., Apple, Inc.'s iPod). Hence, *Shen* does not teach the claimed MD configuration software.

Also, *Watts* does not cure the deficiencies of *Zilliacus* and *Shen*. *Watts* merely teaches running different applications based upon environment information, which itself comes from application programs. *Watts'* disclosure is consistent with the view that application software is designed to help a user perform an activity, such as games, word processors, and media players. *Watts*, Figures 7, 8, 9a, and 9b. As explained above, application software does not manage and integrate a digital device's capabilities, including hardware. Hence, *Watts* does not teach the claimed MD configuration software.

In addition, *Nelakanti* does not cure the deficiencies of *Zilliacus*, *Shen*, and *Watts*. *Nelakanti* merely teaches a "communication system that operates both public and private wireless networks with the same public wireless protocol, such as GSM, and the private wireless network additionally operates with a wired-packet protocol." *Nelakanti*, col. 5, lines 1-4. As understood in the art, *Nelakanti* does not reconfigure hardware, but at best any protocol changes would be handled at an application level. Thus, *Nelakanti* does not teach managing and integrating a digital device's capabilities, including hardware. Hence, *Watts* does not teach the claimed MD configuration software.

Furthermore, *Dunn* does not cure the deficiencies of *Zilliacus*, *Shen*, *Watts*, and *Nelakanti*. *Dunn* merely teaches a "wireless telecommunication system enables a user to obtain communication services in overlapping wireless heterogeneous or homogeneous cellular networks." *Dunn*, Abstract. As known in the art, changing cellular networks does not reconfigure hardware, but at best would be handled at an application level. Hence, *Watts* does not teach the claimed MD configuration software.

Applicants note that it would not have been obvious to one of ordinary skill in the art to combine of *Zilliacus*, *Shen*, *Watts*, *Nelakanti*, and *Dunn*. Personal digital assistants (PDAs), as contemplated in *Shen*, do not include any cellular telephony or networking capability at all. *Shen* is absent any teaching of how to incorporate communications hardware and software in the PDA hardware architecture of *Shen*.

Watts is directed to computer systems having sophisticated hardware, applications, and operating systems. *Watts* is lacks any teaching of how to fit or even adapt the more complex hardware and software of a computer system into the mobile terminals of *Zilliacus*, the mobile stations of *Nelakanti*, or even the PDA of *Shen*. To even suggest that the combination of these five references could somehow (however unsuccessfully) amount to the claimed invention, would necessarily implicate improper hindsight teaching.

Because the cited art does not disclose each and every element of claim 36 and one of ordinary skill in the art could not have combined the cited references to produce the invention of claim 36, claim 36 is not obvious in view of the cited art and should be allowed. Independent claims 37 and 38 contain similar elements as independent claim 36, and are therefore allowable for similar reasons as claim 36.

To support a conclusion that a claim would have been obvious requires that all the claimed elements were known in the prior art and that one skilled in the art could have combined those elements. See *KSR International Co. v. Teleflex Inc.*, 127 S.Ct. 1727, 1739 (2007); see also MPEP § 2143. Based at least on the remarks herein, the Applicants submit that independent claims 36, 37, and 38 are patentable over the cited references.

Ex.1002
APPLE INC. / Page 269 of 610

CONCLUSION

Based on the foregoing amendments and remarks, the Applicants believe the rejections have been overcome, and that the present Application is in condition for allowance. If the Examiner has any questions regarding the case, the Examiner is invited to contact Applicants' undersigned representative.

The requisite fee for an extension of time up to the current date is included herewith.

The Commissioner is authorized to charge any underpayment or credit any overpayment to Deposit Account No. 06-0600 for any matter in connection with this response, including any fee for extension of time, which may be required.

Respectfully submitted,
Raman K. Rao et al.

Date: July 1, 2011

By: /Breton G. Graham/

Breton G. Graham, Reg. No. 48,149
Carr & Ferrell LLP
120 Constitution Drive
Menlo Park, CA 94025
Phone: (650) 812-3400
Fax: (650) 812-3444

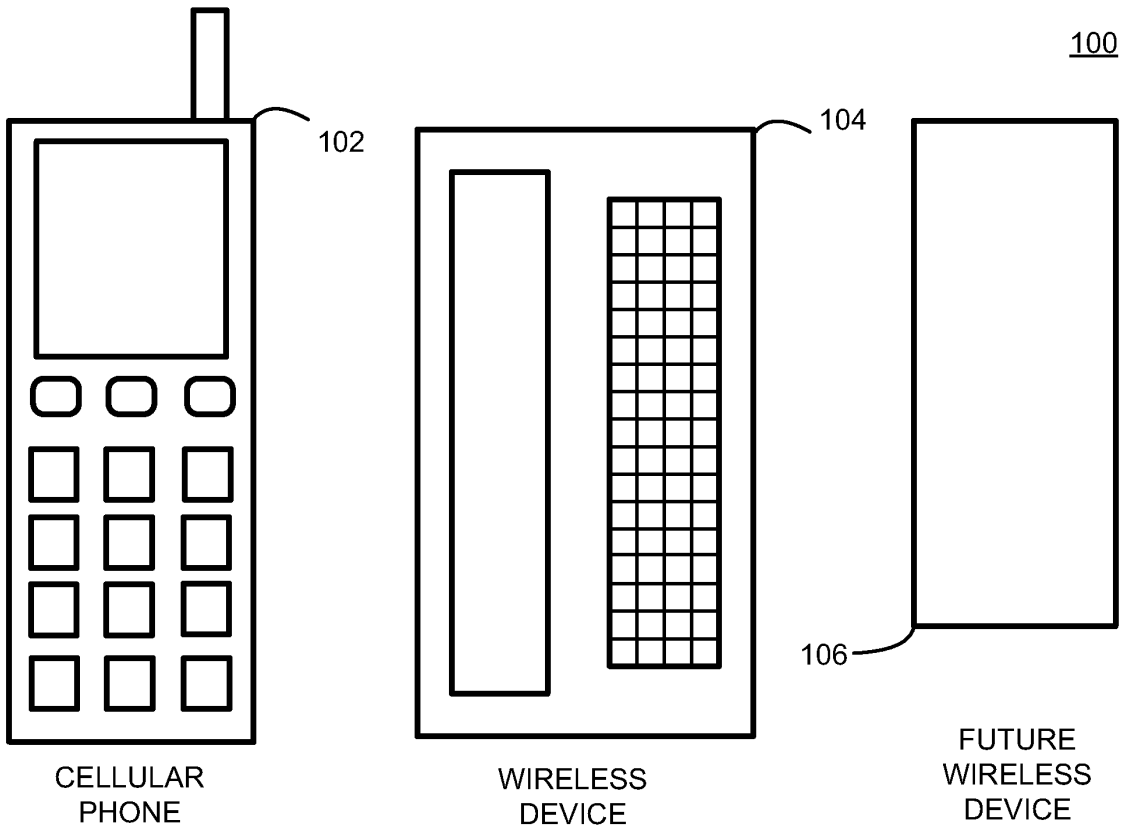
100
102
104
106
CELLULAR PHONE
WIRELESS DEVICE
FUTURE WIRELESS DEVICE

FIG. 1

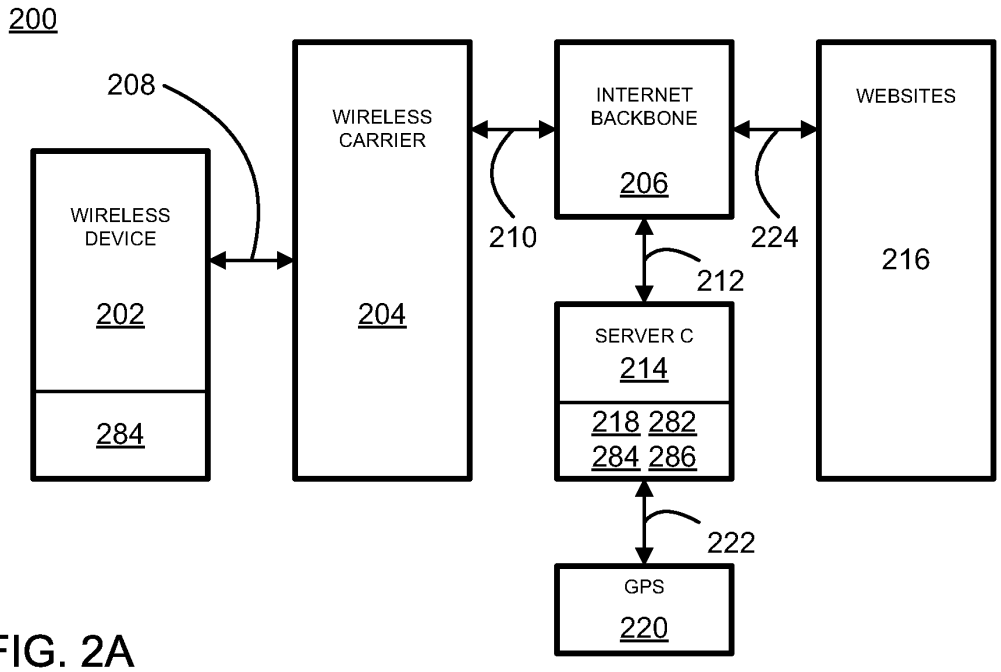
200
208
WIRELESS DEVICE
202
284
WIRELESS CARRIER
204
210
INTERNET BACKBONE
206
224
WEBSITES
216
212
SERVER C
214
218 282
284 286
222
GPS
220

FIG. 2A

Electronic Patent Application Fee Transmittal

Application Number:	10911211
Filing Date:	13-Oct-2004
Title of Invention:	Dynamically configurable IP based wireless device and wireless networks
First Named Inventor/Applicant Name:	Raman K. Rao
Filer:	Breton Geoffrey Graham
Attorney Docket Number:	PA5118US

Filed as Small Entity

Utility under 35 USC 111(a) Filing Fees

Description	Fee Code	Quantity	Amount	Sub-Total in USD($)
Basic Filing:				
Pages:				
Claims:				
Miscellaneous-Filing:				
Petition:				
Patent-Appeals-and-Interference:				
Post-Allowance-and-Post-Issuance:				
Extension-of-Time:				
Extension - 3 months with $0 paid	2253	1	555	555

Description	Fee Code	Quantity	Amount	Sub-Total in USD($)
Miscellaneous:				
		Total in USD ($)		**555**

Electronic Acknowledgement Receipt	
EFS ID:	10442924
Application Number:	10911211
International Application Number:	
Confirmation Number:	7409
Title of Invention:	Dynamically configurable IP based wireless device and wireless networks
First Named Inventor/Applicant Name:	Raman K. Rao
Customer Number:	22830
Filer:	Breton Geoffrey Graham/Breton Graham
Filer Authorized By:	Breton Geoffrey Graham
Attorney Docket Number:	PA5118US
Receipt Date:	01-JUL-2011
Filing Date:	13-OCT-2004
Time Stamp:	18:37:49
Application Type:	Utility under 35 USC 111(a)

Payment information:

Submitted with Payment	yes
Payment Type	Deposit Account
Payment was successfully received in RAM	$555
RAM confirmation Number	4845
Deposit Account	060600
Authorized User	
The Director of the USPTO is hereby authorized to charge indicated fees and credit any overpayment as follows: Charge any Additional Fees required under 37 C.F.R. Section 1.16 (National application filing, search, and examination fees) Charge any Additional Fees required under 37 C.F.R. Section 1.17 (Patent application and reexamination processing fees)	

Charge any Additional Fees required under 37 C.F.R. Section 1.19 (Document supply fees)
Charge any Additional Fees required under 37 C.F.R. Section 1.20 (Post Issuance fees)
Charge any Additional Fees required under 37 C.F.R. Section 1.21 (Miscellaneous fees and charges)

File Listing:

Document Number	Document Description	File Name	File Size(Bytes)/ Message Digest	Multi Part /.zip	Pages (if appl.)
1	Amendment/Req. Reconsideration-After Non-Final Reject	5118US_Response_to_Office_Action_C.pdf	156344 6fe1b291eb7931e32ff66ba12ddad5b3cbbfb3f9	no	14
Warnings:					
Information:					
2	Drawings-other than black and white line drawings	5118US_Replacement_Drawing.pdf	24091 df1dd22b4258099af2a06b5f567501ab960af3cc	no	1
Warnings:					
Information:					
3	Fee Worksheet (SB06)	fee-info.pdf	30216 5e62e1d7b312ad778dabd93fdf559ce88fca637d	no	2
Warnings:					
Information:					
		Total Files Size (in bytes):	210651		

This Acknowledgement Receipt evidences receipt on the noted date by the USPTO of the indicated documents, characterized by the applicant, and including page counts, where applicable. It serves as evidence of receipt similar to a Post Card, as described in MPEP 503.

<u>New Applications Under 35 U.S.C. 111</u>
If a new application is being filed and the application includes the necessary components for a filing date (see 37 CFR 1.53(b)-(d) and MPEP 506), a Filing Receipt (37 CFR 1.54) will be issued in due course and the date shown on this Acknowledgement Receipt will establish the filing date of the application.

<u>National Stage of an International Application under 35 U.S.C. 371</u>
If a timely submission to enter the national stage of an international application is compliant with the conditions of 35 U.S.C. 371 and other applicable requirements a Form PCT/DO/EO/903 indicating acceptance of the application as a national stage submission under 35 U.S.C. 371 will be issued in addition to the Filing Receipt, in due course.

<u>New International Application Filed with the USPTO as a Receiving Office</u>
If a new international application is being filed and the international application includes the necessary components for an international filing date (see PCT Article 11 and MPEP 1810), a Notification of the International Application Number and of the International Filing Date (Form PCT/RO/105) will be issued in due course, subject to prescriptions concerning national security, and the date shown on this Acknowledgement Receipt will establish the international filing date of the application.

SCORE Placeholder Sheet for IFW Content

Application Number: 10911211 Document Date: 7/1/2011

The presence of this form in the IFW record indicates that the following document type was received in electronic format on the date identified above. This content is stored in the SCORE database.

- Drawings

Since this was an electronic submission, there is no physical artifact folder, no artifact folder is recorded in PALM, and no paper documents or physical media exist. The TIFF images in the IFW record were created from the original documents that are stored in SCORE.

To access the documents in the SCORE database, refer to instructions developed by SIRA.

At the time of document entry (noted above):

- Examiners may access SCORE content via the eDAN interface using the Supplemental Content tab.
- Other USPTO employees can bookmark the current SCORE URL (http://es/ScoreAccessWeb/).
- External customers may access SCORE content via the Public and Private PAIR interfaces using the Supplemental Content tab.

Form Revision Date: May 1, 2009

PTO/SB/06 (07-06)
Approved for use through 1/31/2007. OMB 0651-0032
U.S. Patent and Trademark Office; U.S. DEPARTMENT OF COMMERCE
Under the Paperwork Reduction Act of 1995, no persons are required to respond to a collection of information unless it displays a valid OMB control number.

PATENT APPLICATION FEE DETERMINATION RECORD

Substitute for Form PTO-875

Application or Docket Number	Filing Date	☐ To be Mailed
10/911,211	10/13/2004	

APPLICATION AS FILED – PART I

	(Column 1)	(Column 2)	SMALL ENTITY ☒		OR	OTHER THAN SMALL ENTITY	
FOR	NUMBER FILED	NUMBER EXTRA	RATE ($)	FEE ($)		RATE ($)	FEE ($)
☐ BASIC FEE (37 CFR 1.16(a), (b), or (c))	N/A	N/A	N/A			N/A	
☐ SEARCH FEE (37 CFR 1.16(k), (i), or (m))	N/A	N/A	N/A			N/A	
☐ EXAMINATION FEE (37 CFR 1.16(o), (p), or (q))	N/A	N/A	N/A			N/A	
TOTAL CLAIMS (37 CFR 1.16(i))	minus 20 =	*	X $ =		OR	X $ =	
INDEPENDENT CLAIMS (37 CFR 1.16(h))	minus 3 =	*	X $ =			X $ =	
☐ APPLICATION SIZE FEE (37 CFR 1.16(s))	If the specification and drawings exceed 100 sheets of paper, the application size fee due is $250 ($125 for small entity) for each additional 50 sheets or fraction thereof. See 35 U.S.C. 41(a)(1)(G) and 37 CFR 1.16(s).						
☐ MULTIPLE DEPENDENT CLAIM PRESENT (37 CFR 1.16(j))							
* If the difference in column 1 is less than zero, enter "0" in column 2.			TOTAL			TOTAL	

APPLICATION AS AMENDED – PART II

AMENDMENT	07/01/2011	(Column 1) CLAIMS REMAINING AFTER AMENDMENT		(Column 2) HIGHEST NUMBER PREVIOUSLY PAID FOR	(Column 3) PRESENT EXTRA	SMALL ENTITY RATE ($)	ADDITIONAL FEE ($)	OR	OTHER THAN SMALL ENTITY RATE ($)	ADDITIONAL FEE ($)
	Total (37 CFR 1.16(i))	* 3	Minus	** 23	= 0	X $26 =	0	OR	X $ =	
	Independent (37 CFR 1.16(h))	* 3	Minus	***4	= 0	X $110 =	0	OR	X $ =	
	☐ Application Size Fee (37 CFR 1.16(s))									
	☐ FIRST PRESENTATION OF MULTIPLE DEPENDENT CLAIM (37 CFR 1.16(j))							OR		
						TOTAL ADD'L FEE	0	OR	TOTAL ADD'L FEE	

AMENDMENT		(Column 1) CLAIMS REMAINING AFTER AMENDMENT		(Column 2) HIGHEST NUMBER PREVIOUSLY PAID FOR	(Column 3) PRESENT EXTRA	RATE ($)	ADDITIONAL FEE ($)		RATE ($)	ADDITIONAL FEE ($)
	Total (37 CFR 1.16(i))	*	Minus	**	=	X $ =		OR	X $ =	
	Independent (37 CFR 1.16(h))	*	Minus	***	=	X $ =		OR	X $ =	
	☐ Application Size Fee (37 CFR 1.16(s))									
	☐ FIRST PRESENTATION OF MULTIPLE DEPENDENT CLAIM (37 CFR 1.16(j))							OR		
						TOTAL ADD'L FEE		OR	TOTAL ADD'L FEE	

* If the entry in column 1 is less than the entry in column 2, write "0" in column 3.

** If the "Highest Number Previously Paid For" IN THIS SPACE is less than 20, enter "20".

*** If the "Highest Number Previously Paid For" IN THIS SPACE is less than 3, enter "3".

The "Highest Number Previously Paid For" (Total or Independent) is the highest number found in the appropriate box in column 1.

Legal Instrument Examiner:
/PATSY ZIMMERMAN/

This collection of information is required by 37 CFR 1.16. The information is required to obtain or retain a benefit by the public which is to file (and by the USPTO to process) an application. Confidentiality is governed by 35 U.S.C. 122 and 37 CFR 1.14. This collection is estimated to take 12 minutes to complete, including gathering, preparing, and submitting the completed application form to the USPTO. Time will vary depending upon the individual case. Any comments on the amount of time you require to complete this form and/or suggestions for reducing this burden, should be sent to the Chief Information Officer, U.S. Patent and Trademark Office, U.S. Department of Commerce, P.O. Box 1450, Alexandria, VA 22313-1450. DO NOT SEND FEES OR COMPLETED FORMS TO THIS ADDRESS. **SEND TO: Commissioner for Patents, P.O. Box 1450, Alexandria, VA 22313-1450.**

If you need assistance in completing the form, call 1-800-PTO-9199 and select option 2.

PTO/SB/80 (11-08)
Approved for use through 11/30/2011. OMB 0651-0035
U.S. Patent and Trademark Office; U.S. DEPARTMENT OF COMMERCE
Under the Paperwork Reduction Act of 1995, no persons are required to respond to a collection of information unless it displays a valid OMB control number.

POWER OF ATTORNEY TO PROSECUTE APPLICATIONS BEFORE THE USPTO

I hereby revoke all previous powers of attorney given in the application identified in the attached statement under 37 CFR 3.73(b).

I hereby appoint:

☑ Practitioners associated with the Customer Number: **40518**

OR

☐ Practitioner(s) named below (if more than ten patent practitioners are to be named, then a customer number must be used):

Name	Registration Number	Name	Registration Number

as attorney(s) or agent(s) to represent the undersigned before the United States Patent and Trademark Office (USPTO) in connection with any and all patent applications assigned only to the undersigned according to the USPTO assignment records or assignment documents attached to this form in accordance with 37 CFR 3.73(b).

Please change the correspondence address for the application identified in the attached statement under 37 CFR 3.73(b) to:

☑ The address associated with Customer Number: **40518**

OR

☐ Firm or Individual Name			
Address			
City		State	Zip
Country			
Telephone		Email	

Assignee Name and Address:

IP Holdings, Inc.
3099 Alexis Drive
Palo Alto, California 94304

A copy of this form, together with a statement under 37 CFR 3.73(b) (Form PTO/SB/96 or equivalent) is required to be filed in each application in which this form is used. The statement under 37 CFR 3.73(b) may be completed by one of the practitioners appointed in this form if the appointed practitioner is authorized to act on behalf of the assignee, and must identify the application in which this Power of Attorney is to be filed.

SIGNATURE of Assignee of Record

The individual whose signature and title is supplied below is authorized to act on behalf of the assignee

Signature	Rekha K. Rao	Date	11/29/2009
Name	REKHA K. RAO	Telephone	650-941-7096
Title	CEO		

This collection of information is required by 37 CFR 1.31, 1.32 and 1.33. The information is required to obtain or retain a benefit by the public which is to file (and by the USPTO to process) an application. Confidentiality is governed by 35 U.S.C. 122 and 37 CFR 1.11 and 1.14. This collection is estimated to take 3 minutes to complete, including gathering, preparing, and submitting the completed application form to the USPTO. Time will vary depending upon the individual case. Any comments on the amount of time you require to complete this form and/or suggestions for reducing this burden, should be sent to the Chief Information Officer, U.S. Patent and Trademark Office, U.S. Department of Commerce, P.O. Box 1450, Alexandria, VA 22313-1450. DO NOT SEND FEES OR COMPLETED FORMS TO THIS ADDRESS. **SEND TO: Commissioner for Patents, P.O. Box 1450, Alexandria, VA 22313-1450.**

If you need assistance in completing the form, call 1-800-PTO-9199 and select option 2.

FROM : FAX NO. :6506181553 Nov. 29 2009 08:21PM P 1

PTO/SB/96 (07-09)
Approved for use through 07/31/2012. OMB 0651-0031
U.S. Patent and Trademark Office; U.S. DEPARTMENT OF COMMERCE
Under the Paperwork Reduction Act of 1995, no persons are required to respond to a collection of information unless it displays a valid OMB control number.

STATEMENT UNDER 37 CFR 3.73(b)

Applicant/Patent Owner: Raman K. RAO et al.

Application No./Patent No.: 10/911,211 Filed/Issue Date: October 14, 2004

Titled: DYNAMICALLY CONFIGURABLE IP BASED WIRELESS DEVICE AND WIRELESS NETWORKS

IP Holdings, Inc., a corporation

(Name of Assignee) (Type of Assignee, e.g., corporation, partnership, university, government agency, etc.

states that it is:

1. [X] the assignee of the entire right, title, and interest in;

2. [ ] an assignee of less than the entire right, title, and interest in (The extent (by percentage) of its ownership interest is _____ %); or

3. [ ] the assignee of an undivided interest in the entirety of (a complete assignment from one of the joint inventors was made)

the patent application/patent identified above, by virtue of either:

A. [X] An assignment from the inventor(s) of the patent application/patent identified above. The assignment was recorded in the United States Patent and Trademark Office at Reel 021102, Frame 0992, or for which a copy therefore is attached.

OR

B. [ ] A chain of title from the inventor(s), of the patent application/patent identified above, to the current assignee as follows:

1. From: _____ To: _____

The document was recorded in the United States Patent and Trademark Office at

Reel _____, Frame _____, or for which a copy thereof is attached.

2. From: _____ To: _____

The document was recorded in the United States Patent and Trademark Office at

Reel _____, Frame _____, or for which a copy thereof is attached.

3. From: _____ To: _____

The document was recorded in the United States Patent and Trademark Office at

Reel _____, Frame _____, or for which a copy thereof is attached.

[ ] Additional documents in the chain of title are listed on a supplemental sheet(s).

[ ] As required by 37 CFR 3.73(b)(1)(i), the documentary evidence of the chain of title from the original owner to the assignee was, or concurrently is being, submitted for recordation pursuant to 37 CFR 3.11.

[NOTE: A separate copy (*i.e.*, a true copy of the original assignment document(s)) must be submitted to Assignment Division in accordance with 37 CFR Part 3, to record the assignment in the records of the USPTO. See MPEP 302.08]

The undersigned (whose title is supplied below) is authorized to act on behalf of the assignee.

/Johney U. Han/ September 27, 2011

Signature Date

Johney U. Han Attorney of record

Printed or Typed Name Title

This collection of information is required by 37 CFR 3.73(b). The information is required to obtain or retain a benefit by the public which is to file (and by the USPTO to process) an application. Confidentiality is governed by 35 U.S.C. 122 and 37 CFR 1.11 and 1.14. This collection is estimated to take 12 minutes to complete, including gathering, preparing, and submitting the completed application form to the USPTO. Time will vary depending upon the individual case. Any comments on the amount of time you require to complete this form and/or suggestions for reducing this burden, should be sent to the Chief Information Officer, U.S. Patent and Trademark Office, U.S. Department of Commerce, P.O. Box 1450, Alexandria, VA 22313-1450. DO NOT SEND FEES OR COMPLETED FORMS TO THIS ADDRESS. **SEND TO: Commissioner for Patents, P.O. Box 1450, Alexandria, VA 22313-1450.**

If you need assistance in completing the form, call 1-800-PTO-9199 and select option 2.

Electronic Acknowledgement Receipt

EFS ID:	11057905
Application Number:	10911211
International Application Number:	
Confirmation Number:	7409
Title of Invention:	Dynamically configurable IP based wireless device and wireless networks
First Named Inventor/Applicant Name:	Raman K. Rao
Customer Number:	22830
Filer:	Johney U. Han/Quyen Nguyen
Filer Authorized By:	Johney U. Han
Attorney Docket Number:	PA5118US
Receipt Date:	27-SEP-2011
Filing Date:	13-OCT-2004
Time Stamp:	13:55:04
Application Type:	Utility under 35 USC 111(a)

Payment information:

Submitted with Payment	no

File Listing:

Document Number	Document Description	File Name	File Size(Bytes)/ Message Digest	Multi Part /.zip	Pages (if appl.)
1	Power of Attorney	IPHLNZ00501_20110927_power_of_attorney.pdf	36841 66fdaf0bb6d60d871eaf90e8419d4077c8f95ce3	no	1

Warnings:	
Information:	

2	Assignee showing of ownership per 37 CFR 3.73(b).	IPHLNZ00501_20110927_statement_3-73b.pdf	325071 3e596db72c0b2531bcc6627373a5194140081158	no	1

Warnings:	
Information:	
Total Files Size (in bytes):	361912

This Acknowledgement Receipt evidences receipt on the noted date by the USPTO of the indicated documents, characterized by the applicant, and including page counts, where applicable. It serves as evidence of receipt similar to a Post Card, as described in MPEP 503.

New Applications Under 35 U.S.C. 111
If a new application is being filed and the application includes the necessary components for a filing date (see 37 CFR 1.53(b)-(d) and MPEP 506), a Filing Receipt (37 CFR 1.54) will be issued in due course and the date shown on this Acknowledgement Receipt will establish the filing date of the application.

National Stage of an International Application under 35 U.S.C. 371
If a timely submission to enter the national stage of an international application is compliant with the conditions of 35 U.S.C. 371 and other applicable requirements a Form PCT/DO/EO/903 indicating acceptance of the application as a national stage submission under 35 U.S.C. 371 will be issued in addition to the Filing Receipt, in due course.

New International Application Filed with the USPTO as a Receiving Office
If a new international application is being filed and the international application includes the necessary components for an international filing date (see PCT Article 11 and MPEP 1810), a Notification of the International Application Number and of the International Filing Date (Form PCT/RO/105) will be issued in due course, subject to prescriptions concerning national security, and the date shown on this Acknowledgement Receipt will establish the international filing date of the application.

UNITED STATES PATENT AND TRADEMARK OFFICE

UNITED STATES DEPARTMENT OF COMMERCE
United States Patent and Trademark Office
Address: COMMISSIONER FOR PATENTS
P.O. Box 1450
Alexandria, Virginia 22313-1450
www.uspto.gov

APPLICATION NO.	FILING DATE	FIRST NAMED INVENTOR	ATTORNEY DOCKET NO.	CONFIRMATION NO.
10/911,211	10/13/2004	Raman K. Rao	PA5118US	7409

22830 7590 09/28/2011

CARR & FERRELL LLP
120 CONSTITUTION DRIVE
MENLO PARK, CA 94025

EXAMINER	
IRACE, MICHAEL	
ART UNIT	PAPER NUMBER
2617	
MAIL DATE	DELIVERY MODE
09/28/2011	PAPER

Please find below and/or attached an Office communication concerning this application or proceeding.

The time period for reply, if any, is set in the attached communication.

Office Action Summary	Application No.	Applicant(s)	
	10/911,211	RAO ET AL.	
	Examiner	Art Unit	
	MICHAEL IRACE	2617	

-- The MAILING DATE of this communication appears on the cover sheet with the correspondence address --

Period for Reply

A SHORTENED STATUTORY PERIOD FOR REPLY IS SET TO EXPIRE *3* MONTH(S) OR THIRTY (30) DAYS, WHICHEVER IS LONGER, FROM THE MAILING DATE OF THIS COMMUNICATION.

- Extensions of time may be available under the provisions of 37 CFR 1.136(a). In no event, however, may a reply be timely filed after SIX (6) MONTHS from the mailing date of this communication.
- If NO period for reply is specified above, the maximum statutory period will apply and will expire SIX (6) MONTHS from the mailing date of this communication.
- Failure to reply within the set or extended period for reply will, by statute, cause the application to become ABANDONED (35 U.S.C. § 133). Any reply received by the Office later than three months after the mailing date of this communication, even if timely filed, may reduce any earned patent term adjustment. See 37 CFR 1.704(b).

Status

1)☒ Responsive to communication(s) filed on *01 July 2011*.

2a)☒ This action is **FINAL**. 2b)☐ This action is non-final.

3)☐ An election was made by the applicant in response to a restriction requirement set forth during the interview on _____; the restriction requirement and election have been incorporated into this action.

4)☐ Since this application is in condition for allowance except for formal matters, prosecution as to the merits is closed in accordance with the practice under *Ex parte Quayle*, 1935 C.D. 11, 453 O.G. 213.

Disposition of Claims

5)☒ Claim(s) *36-38* is/are pending in the application.

5a) Of the above claim(s) _____ is/are withdrawn from consideration.

6)☐ Claim(s) _____ is/are allowed.

7)☒ Claim(s) *36-38* is/are rejected.

8)☐ Claim(s) _____ is/are objected to.

9)☐ Claim(s) _____ are subject to restriction and/or election requirement.

Application Papers

10)☐ The specification is objected to by the Examiner.

11)☐ The drawing(s) filed on _____ is/are: a)☐ accepted or b)☐ objected to by the Examiner.

Applicant may not request that any objection to the drawing(s) be held in abeyance. See 37 CFR 1.85(a).

Replacement drawing sheet(s) including the correction is required if the drawing(s) is objected to. See 37 CFR 1.121(d).

12)☐ The oath or declaration is objected to by the Examiner. Note the attached Office Action or form PTO-152.

Priority under 35 U.S.C. § 119

13)☐ Acknowledgment is made of a claim for foreign priority under 35 U.S.C. § 119(a)-(d) or (f).

a)☐ All b)☐ Some * c)☐ None of:

1.☐ Certified copies of the priority documents have been received.

2.☐ Certified copies of the priority documents have been received in Application No. _____.

3.☐ Copies of the certified copies of the priority documents have been received in this National Stage application from the International Bureau (PCT Rule 17.2(a)).

* See the attached detailed Office action for a list of the certified copies not received.

Attachment(s)

1) ☐ Notice of References Cited (PTO-892)
2) ☐ Notice of Draftsperson's Patent Drawing Review (PTO-948)
3) ☐ Information Disclosure Statement(s) (PTO/SB/08) Paper No(s)/Mail Date _____.
4) ☐ Interview Summary (PTO-413) Paper No(s)/Mail Date. _____ .
5) ☐ Notice of Informal Patent Application
6) ☐ Other: _____.

DETAILED ACTION

Response to Arguments

1. Applicant argues Zilliacus does not teach the MD configuration software wherein the MD configuration software may operate and control the constituent components of the MD's hardware and may allow the constituent components of the MD's hardware to communicate with each other. In response to applicant's argument that the references fail to show certain features of applicant's invention, it is noted that the features upon which applicant relies (i.e., "wherein the MD configuration software may operate and control the constituent components of the MD's hardware and may allow the constituent components of the MD's hardware to communicate with each other") are not recited in the rejected claim(s). Although the claims are interpreted in light of the specification, limitations from the specification are not read into the claims. See *In re Van Geuns*, 988 F.2d 1181, 26 USPQ2d 1057 (Fed. Cir. 1993).

2. Applicant argues that Zilliacus licenses cannot be considered configuration software. *The examiner respectfully disagrees, the licenses determines how to configure itself, when to delete/uninstall itself as well as many other configuration options (abstract, Figure 4 see also column 8 lines 5-20) . Although the license may determine how much the user may pay this is not the only function of the license.*

3. Additionally the examiner respectfully disagrees with the applicants arguments that application software does not manage and integrate a device capabilities. Not only is such a limitation not claimed but application software can enable/disable hardware functions can change input/output functions as well other changing hardware integration

functions while being used through an operating system software. Should the applicant wish to claim changing operating system software, the applicant is invited to include the operating software in the claims (or at least "permanently and directly")

4. Applicant's argues that it would not have been obvious to one of ordinary skill in the art at the time the invention was made combine Shen with Zilliacus, as Shen does not disclose networking the PDA. *The examiner respectfully disagrees, Shen discloses networking the PDA with computer via a wireless connection (Column 3 lines 1-15) . Furthermore, Zilliacus discloses that PDA, smart phones and personal computers are all analogous devices for which simple substitution would be obvious (Column 1 lines 30-40).*

5. The applicant is to note that the examiner for this application has changed. Should the applicant have any questions the applicant is invited to contact the examiner at the new contact information as disclosed below.

Claim Rejections - 35 USC § 112

Claim 38 is no longer rejected under USC 112 first paragraph.

Claim Rejections - 35 USC § 103

6. The following is a quotation of 35 U.S.C. 103(a) which forms the basis for all obviousness rejections set forth in this Office action:

> (a) A patent may not be obtained though the invention is not identically disclosed or described as set forth in section 102 of this title, if the differences between the subject matter sought to be patented and the prior art are such that the subject matter as a whole would have been obvious at the time the

> invention was made to a person having ordinary skill in the art to which said subject matter pertains. Patentability shall not be negatived by the manner in which the invention was made.

7. The factual inquiries set forth in *Graham* v. *John Deere Co.*, 383 U.S. 1, 148 USPQ 459 (1966), that are applied for establishing a background for determining obviousness under 35 U.S.C. 103(a) are summarized as follows:

1. Determining the scope and contents of the prior art.
2. Ascertaining the differences between the prior art and the claims at issue.
3. Resolving the level of ordinary skill in the pertinent art.
4. Considering objective evidence present in the application indicating obviousness or nonobviousness.

8. Claim 36 is rejected under 35 U.S.C. 103(a) as being unpatentable over Zilliacus (US 6,832230) in view of Shen (US 6,401,059) and Watts (US 6,119,186) and Nelakanti (US 6,993,359) .

Re claim 36, Zilliacus teaches: Storing data on a server (application database, Zilliacus et al. Fig. 2), the data comprising a plurality of functional instruction sets (application, Zilliacus et al. Fig. 2), content (applications provide content like games, Zilliacus et al. cl 65-6), and MD configuration software (license, Zilliacus et al. Fig. 2).

Zilliacus further teaches: Executing a dynamic reconfiguration of the MD using **one of**,

The processing and storage capabilities of the MD;

The processing and storage capabilities of the server; and Processing

and storage capabilities of the MD in conjunction with processing and storage capabilities of the server (mobile device is dynamically reconfigured when a new

application is installed, hence processed, on the device from a storage device contained on a server, Zilliacus et al. Fig. 2);

The prior art teaches a cell phone. The prior art also teaches a method to download software onto a mobile device, similar to the applicant's claims of "requesting mode configuration of the server."

But the prior art does not specifically teach "The MD remotely requesting a mode configuration of the server, wherein the server configures the MD as one or more of a plurality of intelligent devices comprising a cell phone, a remote TV controller, and a remote controller of a plurality of devices." However, Shen teaches a remote TV controller application on a mobile device (Shen et al. abstract). Shen is analogous to the prior art, because Shen similarly teaches downloading applications to a mobile device.

Thus, it would have been obvious to a person having ordinary skill in the art to download an application to a mobile device (by the prior art), in which the application is an tv remote controller (by Shen). The combination is a convergence of mobile devices and simplifies the number of remote control devices.

Shen further teaches that once an application, like a tv remote controller, is downloaded onto a portable computer, like a mobile device, the device is configured:

Configuring the MD for a selected set of functions including communication (device is able to communicate with a TV and/or VCR, Shen et al. Fig. 2), computation (Shen teaches a CPU, and hence teaches computation required to execute commands, Shen et al. Fig. 1A), command (instructions for remote control, Shen et al. c3 16-29),

sensing (a PDA has different sensors for communication, user input, microphone, even sensing the current time; Shen teaches sensing user input in order to send a remote control command, Shen et al. c3 16-44) and control (remote devices like a TV and VCR are remotely controlled, Shen et al. Fig. 2);

Establishing the plurality of functional instructions for dynamic reconfiguration of the MD from one of the selected sets of functions to another (a mobile device, like a PDA, can perform different functions like a calendar, email, address book, and memo pad, Shen et al. cl 11-18). A mobile device is "dynamically reconfigured" when a new application is loaded onto the device.

Shen further teaches :

Alternatively accessing one of the plurality of functional instruction sets (application) from a storage device on the MD (different applications can be executed on a mobile device like a PDA, Shen et al. cl 11-18), wherein the storage device comprises at least one lookup table (like an array or data structure, like XML, of a program schedule stored on a mobile device, Shen et al. Fig. 3 and c2 51-65);

Shen further teaches:

The MD downloading from the server a macro command (downloading IR control information from the Internet, Shen et al. c3 45-51), wherein the macro command enables the MD to control a specific intelligent device (IR control information, Shen et al. c3 45-51).

The prior art teaches operating a device in a plurality of environments, such as when switching applications. But th

e prior art does not specifically teach "The MD dynamically reconfiguring to transmit and receive in a plurality of environments, comprising an office environment, a home environment."

However, Watts teaches reconfiguring a computing device, like a mobile device, from an office environment to a home environment (Watts et al. c10 51-65). Watts also teaches reconfiguring transmitting/receiving with other devices depending on the environment (Watts et al. cl 3 20-34). Watts is analogous to the prior art, because Watts similarly teaches "dynamic reconfiguration."

Therefore, it would have been obvious to a person having ordinary skill in the art to reconfigure a computing device based on the operating environment (by Watts) in which the computing device is a mobile device (by prior art). The combination allows a computing device to change according to different environmental conditions (Watts et al. abstract). Watts further teaches: The MD sensing an environment the MD is primarily operating in (via an "informant" like GPS, Watts et al. c3 65-41), and maintaining an ability to switch instantaneously to a different environment (reconfiguring a computer to be operate from an work office desktop to a home office desktop, Watts et al. cl 0 51-65).

The prior art teaches reconfiguring between different environments, like between an office and home environment. But the prior art does not specifically teach

"dynamically reconfiguring" in environments comprising "an Internet protocol (IP) environment, and a plurality of public carrier environments." *However, Nelakanti teaches dynamically reconfiguring to transmit and receive in an IP environment (private wireless IP network) and a public carrier environment (public network such as GSM or PSTN) for the purpose of handover (Nelakanti et al. abstract).*

Therefore, it would have been obvious to a person having ordinary skill in the art to "dynamically reconfigure" a mobile device in different environments (by prior art), such as an IP environment and a public carrier environment (by Nelakanti). The combination allows a mobile device to handoff communications between networks (Nelakanti et al. title). 8.

9. Claim 37 is rejected under 35 U.S.C. 103(a) as being unpatentable over Zilliacus et al. (US 6,832,230 B1) in view of Shen et al. (US 6,401,059 B1) and Watts et al. (US 6,119,186) and Nelakanti et al. (US 6,993,359 B1) and Dunn et al. (US 6,591,103 B1)..

Re claim 37, please see the rejection of similar claim 36. The additional limitations are addressed below. Watts further teaches: A Global Positioning System unit that allows the MD to know its exact location, wherein the exact location of the MD Is used for a plurality of functions (GPS "informant" are used in an environment manager aware application program, Watts et al. c3 65-41).

The prior art teaches using location information to perform various functions, but the prior art may not exactly state using location data for "sensing one or more networks."

However, Dunn teaches using GPS location data to find a network (Dunn et al. abstract). Dunn is analogous to the prior art, because Dunn similarly teaches a location based service. Thus, it would have been obvious to a person having ordinary skill in the art to using location data from GPS (by prior art) to sense one or more networks (by Dunn). The combination allows a mobile device to be dynamically reconfigured in different network environments and locations.

10. Claim 38 rejected under 35 U.S.C. 103(a) as being unpatentable over Zilliacus et al. (US 6,832,230 B1) in view of Shen et al. (US 6,401,059 B1) and Watts et al. (US 6,119,186) and Nelakanti et al. (US 6,993,359 B1). 11..

Re claim 38, please see the rejection of similar claim 36. The additional limitations are addressed below. *Nelakanti further teaches: Wherein communication protocols configure the mobile communication system for communication (GSM, PSTN, ISDN, IP protocols, etc. configure a communication system for communication, Nelakanti et al. abstract);* Wherein the MD is dynamically tuned for transmit and receive functions suitable for each environment *(such as switching from one set of frequencies in a cell to another set of frequencies in a different cell during handover, Nelakanti et al. c7 23-48);*

The MD configured to bypass a public wireless carrier service when the public wireless carrier service is not required for communication (handover between public and private networks, Nelakanti et al. abstract). Watts further teaches: Wherein the MD is configured to be in a watchdog OR sleep mode in different environments (shutting down unnecessary systems and software based on environment, like being on an airplane, Watts et al. cl 1 51-67).

Conclusion

11. **THIS ACTION IS MADE FINAL.** Applicant is reminded of the extension of time policy as set forth in 37 CFR 1.136(a).

A shortened statutory period for reply to this final action is set to expire THREE MONTHS from the mailing date of this action. In the event a first reply is filed within TWO MONTHS of the mailing date of this final action and the advisory action is not mailed until after the end of the THREE-MONTH shortened statutory period, then the shortened statutory period will expire on the date the advisory action is mailed, and any extension fee pursuant to 37 CFR 1.136(a) will be calculated from the mailing date of the advisory action. In no event, however, will the statutory period for reply expire later than SIX MONTHS from the mailing date of this final action.

Any inquiry concerning this communication or earlier communications from the examiner should be directed to MICHAEL IRACE whose telephone number is (571)270-

7273. The examiner can normally be reached on Monday through Friday 8:00am to 5:30pm.

If attempts to reach the examiner by telephone are unsuccessful, the examiner's supervisor, Patrick Edouard can be reached on (571)272-7603. The fax phone number for the organization where this application or proceeding is assigned is 571-273-8300.

Information regarding the status of an application may be obtained from the Patent Application Information Retrieval (PAIR) system. Status information for published applications may be obtained from either Private PAIR or Public PAIR. Status information for unpublished applications is available through Private PAIR only. For more information about the PAIR system, see http://pair-direct.uspto.gov. Should you have questions on access to the Private PAIR system, contact the Electronic Business Center (EBC) at 866-217-9197 (toll-free). If you would like assistance from a USPTO Customer Service Representative or access to the automated information system, call 800-786-9199 (IN USA OR CANADA) or 571-272-1000.

/MICHAEL IRACE/
Examiner, Art Unit 2617
/Patrick N. Edouard/
Supervisory Patent Examiner, Art Unit 2617

EAST Search History

EAST Search History (Prior Art)

Ref #	Hits	Search Query	DBs	Default Operator	Plurals	Time Stamp
L2	50	"6401059"	US-PGPUB; USPAT; FPRS; EPO; JPO; DERWENT; IBM_TDB	ADJ	OFF	2011/09/21 17:52
L3	2	"61191186"	US-PGPUB; USPAT; FPRS; EPO; JPO; DERWENT; IBM_TDB	ADJ	OFF	2011/09/21 18:25
L4	34	"6119186"	US-PGPUB; USPAT; FPRS; EPO; JPO; DERWENT; IBM_TDB	ADJ	OFF	2011/09/21 18:25
L5	51	cell phone with application with remote control	US-PGPUB; USPAT; FPRS; EPO; JPO; DERWENT; IBM_TDB	ADJ	OFF	2011/09/21 18:56
L6	269	phone with application with remote control	US-PGPUB; USPAT; FPRS; EPO; JPO; DERWENT; IBM_TDB	ADJ	OFF	2011/09/21 18:57
L7	113	phone with application with remote control	USPAT; FPRS; EPO; JPO; DERWENT; IBM_TDB	ADJ	OFF	2011/09/21 18:57
L8	983	provision$4 with remote control	USPAT; FPRS; EPO; JPO; DERWENT; IBM_TDB	ADJ	OFF	2011/09/21 18:59
L9	61	provision$4 with remote control and cellular	USPAT; FPRS; EPO; JPO; DERWENT; IBM_TDB	ADJ	OFF	2011/09/21 18:59
L10	0	provision$4 with universal control and cellular	USPAT; FPRS; EPO; JPO; DERWENT; IBM_TDB	ADJ	OFF	2011/09/21 19:00
L11	3	provision$4 with universal remote and cellular	USPAT; FPRS; EPO; JPO; DERWENT; IBM_TDB	ADJ	OFF	2011/09/21 19:00
L12	2019	provision$4 with location and (cellular$4)	USPAT; FPRS; EPO; JPO; DERWENT; IBM_TDB	ADJ	OFF	2011/09/21 19:00
L13	336	provisioning with location and (cellular$4)	USPAT; FPRS; EPO; JPO; DERWENT; IBM_TDB	ADJ	OFF	2011/09/21 19:00
L14	70	provisioning with location and (cell$4) and (remote or universal) near1 control	USPAT; FPRS; EPO; JPO; DERWENT; IBM_TDB	ADJ	OFF	2011/09/21 19:01
L15	8	provisioning with location and (cell$4) and (remote or universal) near1 control same (tv or television)	USPAT; FPRS; EPO; JPO; DERWENT; IBM_TDB	ADJ	OFF	2011/09/21 19:02

L16	36	provisioning with location with function and (cell$4)	USPAT; FPRS; EPO; JPO; DERWENT; IBM_TDB	ADJ	OFF	2011/09/21 19:11

EAST Search History (Interference)

< This search history is empty>

9/ 21/ 2011 7:13:25 PM
C:\ Users\ mirace\ Documents\ EAST\ Workspaces\ crash2.wsp

Search Notes	Application/Control No.	Applicant(s)/Patent Under Reexamination
	10911211	RAO ET AL.
	Examiner	Art Unit
	DAVID WANG	2617

SEARCHED			
Class	Subclass	Date	Examiner
455	461	3/14/2008	DW
709	221	3/14/2008	DW
710	104	3/14/2008	DW

SEARCH NOTES		
Search Notes	Date	Examiner
please see attached	3/14/2008	DW
consulted Duc Nguyen SPE regarding the use of the Logitech Harmony remote controller	3/11/2008	DW
google search for "(buy OR purchase) applications from mobile phone"	12/3/2010	DW
google search for "finding network with GPS location" and "(detecting OR sensing) (home OR office OR work) environment GPS"	12/9/2010	DW
consulted Huy Phan	12/9/2010	DW
Search East see attached.		

INTERFERENCE SEARCH			
Class	Subclass	Date	Examiner

Index of Claims	Application/Control No.	Applicant(s)/Patent Under Reexamination
	10911211	RAO ET AL.
	Examiner	Art Unit
	DAVID WANG	2617

✓	Rejected	-	Cancelled	N	Non-Elected	A	Appeal
=	Allowed	÷	Restricted	I	Interference	O	Objected

☐ Claims renumbered in the same order as presented by applicant ☐ CPA ☐ T.D. ☐ R.1.47

CLAIM		DATE								
Final	Original	03/14/2008	12/09/2010	09/21/2011						
	1	-	-	-						
	2	-	-	-						
	3	-	-	-						
	4	-	-	-						
	5	-	-	-						
	6	-	-	-						
	7	-	-	-						
	8	-	-	-						
	9	-	-	-						
	10	-	-	-						
	11	-	-	-						
	12	-	-	-						
	13	-	-	-						
	14	-	-	-						
	15	-	-	-						
	16	-	-	-						
	17	-	-	-						
	18	-	-	-						
	19	-	-	-						
	20	-	-	-						
	21	-	-	-						
	22	-	-	-						
	23	-	-	-						
	24	-	-	-						
	25	-	-	-						
	26	-	-	-						
	27	-	-	-						
	28	-	-	-						
	29	-	-	-						
	30	-	-	-						
	31	-	-	-						
	32	-	-	-						
	33	-	-	-						
	34	-	-	-						
	35	-	-	-						
	36	✓	✓	✓						

Index of Claims	Application/Control No.	Applicant(s)/Patent Under Reexamination
	10911211	RAO ET AL.
	Examiner	Art Unit
	DAVID WANG	2617

✓	Rejected	-	Cancelled	N	Non-Elected	A	Appeal
=	Allowed	÷	Restricted	I	Interference	O	Objected

☐ Claims renumbered in the same order as presented by applicant ☐ CPA ☐ T.D. ☐ R.1.47

CLAIM		DATE								
Final	Original	03/14/2008	12/09/2010	09/21/2011						
	37	✓	✓	✓						
	38		✓	✓						

Doc Code: PET.POA.WDRW
Document Description: Petition to withdraw attorney or agent (SB83)

PTO/SB/83 (11-08)
Approved for use through 11/30/2011. OMB 0651-0035
U.S. Patent and Trademark Office, U.S. DEPARTMENT OF COMMERCE
Under the Paperwork Reduction Act of 1995, no persons are required to respond to a collection of information unless it displays a valid OMB control number.

REQUEST FOR WITHDRAWAL AS ATTORNEY OR AGENT AND CHANGE OF CORRESPONDENCE ADDRESS

Application Number	10/911,211
Filing Date	2004-10-13
First Named Inventor	Raman K. Rao et al.
Art Unit	2617
Examiner Name	Michael Irace
Attorney Docket Number	PA5118US

To: Commissioner for Patents
P.O. Box 1450
Alexandria, VA 22313-1450

Please withdraw me as attorney or agent for the above identified patent application, and

- ☐ all the practitioners of record;
- ☐ the practitioners (with registration numbers) of record listed on the attached paper(s); or
- ☑ the practitioners of record associated with Customer Number: 22830

NOTE: The immediately preceding box should only be marked when the practitioners were appointed using the listed Customer Number.

The reason(s) for this request are those described in 37 CFR :

☐ 10.40(b)(1)	☐ 10.40(b)(2)	☐ 10.40(b)(3)	☐ 10.40(b)(4)
☐ 10.40(c)(1)(i)	☐ 10.40(c)(1)(ii)	☐ 10.40(c)(1)(iii)	☐ 10.40(c)(1)(iv)
☐ 10.40(c)(1)(v)	☐ 10.40(c)(1)(vi)	☐ 10.40(c)(2)	☐ 10.40(c)(3)
☐ 10.40(c)(4)	☑ 10.40(c)(5)	☐ 10.40(c)(6) Please explain below:	

Certifications

Check each box below that is factually correct. WARNING: If a box is left unchecked, the request will likely not be approved.

1. ☑ I/We have given reasonable notice to the client, prior to the expiration of the response period, that the practitioner(s) intend to withdraw from employment.

2. ☑ I/We have delivered to the client or a duly authorized representative of the client all papers and property (including funds) to which the client is entitled.

3. ☑ I/We have notified the client of any responses that may be due and the time frame within which the client must respond.

Please provide an explanation, if necessary:

This collection of information is required by 37 CFR 1.36. The information is required to obtain or retain a benefit by the public which is to file (and by the USPTO to process) an application. Confidentiality is governed by 35 U.S.C. 122 and 37 CFR 1.11 and 1.14. This collection is estimated to take 12 minutes to complete, including gathering, preparing, and submitting the completed application form to the USPTO. Time will vary depending upon the individual case. Any comments on the amount of time you require to complete this form and/or suggestions for reducing this burden, should be sent to the Chief Information Officer, U.S. Patent and Trademark Office, U.S. Department of Commerce, P.O. Box 1450, Alexandria, VA 22313-1450. DO NOT SEND FEES OR COMPLETED FORMS TO THIS ADDRESS. **SEND TO: Commissioner for Patents, P.O. Box 1450, Alexandria, VA 22313-1450.**

If you need assistance in completing the form, call 1-800-PTO-9199 and select option 2.

PTO/SB/83 (11-08)
Approved for use through 11/30/2011. OMB 0651-0035
U.S. Patent and Trademark Office, U.S. DEPARTMENT OF COMMERCE
Under the Paperwork Reduction Act of 1995, no persons are required to respond to a collection of information unless it displays a valid OMB control number.

REQUEST FOR WITHDRAWAL AS ATTORNEY OR AGENT AND CHANGE OF CORRESPONDENCE ADDRESS

Complete the following section only when the correspondence address will change. *Changes of address will only be accepted to an inventor or an assignee that has properly made itself of record pursuant to 37 CFR 3.71.*

Change the correspondence address and direct all future correspondence to:

A. ☐ The address of the inventor or assignee associated with Customer Number: _____

OR

B. ☑ Inventor or Assignee name	Sanjay K. Rao

Address	IP Holdings, Inc. 514 Bryant Street, Suite #102		
City Palo Alto	State CA	Zip 94301	Country USA
Telephone 650.906.3755		Email sanjayrao@ipholdings.com	

I am authorized to sign on behalf of myself and all withdrawing practitioners.

Signature	/Breton G. Graham/		
Name	Breton G. Graham	Registration No. 48,149	
Address	120 Constitution Drive		
City Menlo Park	State CA	Zip 94025	Country USA
Date	September 21, 2011	Telephone No. 650 812-3400	

NOTE: ***Withdrawal is effective when approved rather than when received.***

This collection of information is required by 37 CFR 1.36. The information is required to obtain or retain a benefit by the public which is to file (and by the USPTO to process) an application. Confidentiality is governed by 35 U.S.C. 122 and 37 CFR 1.11 and 1.14. This collection is estimated to take 12 minutes to complete, including gathering, preparing, and submitting the completed application form to the USPTO. Time will vary depending upon the individual case. Any comments on the amount of time you require to complete this form and/or suggestions for reducing this burden, should be sent to the Chief Information Officer, U.S. Patent and Trademark Office, U.S. Department of Commerce, P.O. Box 1450, Alexandria, VA 22313-1450. DO NOT SEND FEES OR COMPLETED FORMS TO THIS ADDRESS. **SEND TO: Commissioner for Patents, P.O. Box 1450, Alexandria, VA 22313-1450.**

If you need assistance in completing the form, call 1-800-PTO-9199 and select option 2.

Privacy Act Statement

The **Privacy Act of 1974 (P.L. 93-579)** requires that you be given certain information in connection with your submission of the attached form related to a patent application or patent. Accordingly, pursuant to the requirements of the Act, please be advised that: (1) the general authority for the collection of this information is 35 U.S.C. 2(b)(2); (2) furnishing of the information solicited is voluntary; and (3) the principal purpose for which the information is used by the U.S. Patent and Trademark Office is to process and/or examine your submission related to a patent application or patent. If you do not furnish the requested information, the U.S. Patent and Trademark Office may not be able to process and/or examine your submission, which may result in termination of proceedings or abandonment of the application or expiration of the patent.

The information provided by you in this form will be subject to the following routine uses:

1. The information on this form will be treated confidentially to the extent allowed under the Freedom of Information Act (5 U.S.C. 552) and the Privacy Act (5 U.S.C. 552a). Records from this system of records may be disclosed to the Department of Justice to determine whether disclosure of these records is required by the Freedom of Information Act.
2. A record from this system of records may be disclosed, as a routine use, in the course of presenting evidence to a court, magistrate, or administrative tribunal, including disclosures to opposing counsel in the course of settlement negotiations.
3. A record in this system of records may be disclosed, as a routine use, to a Member of Congress submitting a request involving an individual, to whom the record pertains, when the individual has requested assistance from the Member with respect to the subject matter of the record.
4. A record in this system of records may be disclosed, as a routine use, to a contractor of the Agency having need for the information in order to perform a contract. Recipients of information shall be required to comply with the requirements of the Privacy Act of 1974, as amended, pursuant to 5 U.S.C. 552a(m).
5. A record related to an International Application filed under the Patent Cooperation Treaty in this system of records may be disclosed, as a routine use, to the International Bureau of the World Intellectual Property Organization, pursuant to the Patent Cooperation Treaty.
6. A record in this system of records may be disclosed, as a routine use, to another federal agency for purposes of National Security review (35 U.S.C. 181) and for review pursuant to the Atomic Energy Act (42 U.S.C. 218(c)).
7. A record from this system of records may be disclosed, as a routine use, to the Administrator, General Services, or his/her designee, during an inspection of records conducted by GSA as part of that agency's responsibility to recommend improvements in records management practices and programs, under authority of 44 U.S.C. 2904 and 2906. Such disclosure shall be made in accordance with the GSA regulations governing inspection of records for this purpose, and any other relevant (*i.e.*, GSA or Commerce) directive. Such disclosure shall not be used to make determinations about individuals.
8. A record from this system of records may be disclosed, as a routine use, to the public after either publication of the application pursuant to 35 U.S.C. 122(b) or issuance of a patent pursuant to 35 U.S.C. 151. Further, a record may be disclosed, subject to the limitations of 37 CFR 1.14, as a routine use, to the public if the record was filed in an application which became abandoned or in which the proceedings were terminated and which application is referenced by either a published application, an application open to public inspection or an issued patent.
9. A record from this system of records may be disclosed, as a routine use, to a Federal, State, or local law enforcement agency, if the USPTO becomes aware of a violation or potential violation of law or regulation.

Electronic Acknowledgement Receipt

EFS ID:	11011527
Application Number:	10911211
International Application Number:	
Confirmation Number:	7409
Title of Invention:	Dynamically configurable IP based wireless device and wireless networks
First Named Inventor/Applicant Name:	Raman K. Rao
Customer Number:	22830
Filer:	Breton Geoffrey Graham
Filer Authorized By:	
Attorney Docket Number:	PA5118US
Receipt Date:	28-SEP-2011
Filing Date:	13-OCT-2004
Time Stamp:	21:56:50
Application Type:	Utility under 35 USC 111(a)

Payment information:

Submitted with Payment	no

File Listing:

Document Number	Document Description	File Name	File Size(Bytes)/ Message Digest	Multi Part /.zip	Pages (if appl.)
1	Petition to withdraw attorney or agent (SB83)	5118US_Request_for_Withdrawal_SB83.pdf	75487 48fd4a2d85f12d3d446b2681797cc167bd491813	no	3

Warnings:

Information:

Total Files Size (in bytes):	75487

This Acknowledgement Receipt evidences receipt on the noted date by the USPTO of the indicated documents, characterized by the applicant, and including page counts, where applicable. It serves as evidence of receipt similar to a Post Card, as described in MPEP 503.

New Applications Under 35 U.S.C. 111
If a new application is being filed and the application includes the necessary components for a filing date (see 37 CFR 1.53(b)-(d) and MPEP 506), a Filing Receipt (37 CFR 1.54) will be issued in due course and the date shown on this Acknowledgement Receipt will establish the filing date of the application.

National Stage of an International Application under 35 U.S.C. 371
If a timely submission to enter the national stage of an international application is compliant with the conditions of 35 U.S.C. 371 and other applicable requirements a Form PCT/DO/EO/903 indicating acceptance of the application as a national stage submission under 35 U.S.C. 371 will be issued in addition to the Filing Receipt, in due course.

New International Application Filed with the USPTO as a Receiving Office
If a new international application is being filed and the international application includes the necessary components for an international filing date (see PCT Article 11 and MPEP 1810), a Notification of the International Application Number and of the International Filing Date (Form PCT/RO/105) will be issued in due course, subject to prescriptions concerning national security, and the date shown on this Acknowledgement Receipt will establish the international filing date of the application.

UNITED STATES PATENT AND TRADEMARK OFFICE

UNITED STATES DEPARTMENT OF COMMERCE
United States Patent and Trademark Office
Address: COMMISSIONER FOR PATENTS
P.O. Box 1450
Alexandria, Virginia 22313-1450
www.uspto.gov

APPLICATION NUMBER	FILING OR 371(C) DATE	FIRST NAMED APPLICANT	ATTY. DOCKET NO./TITLE
10/911,211	10/13/2004	Raman K. Rao	PA5118US

CONFIRMATION NO. 7409

22830
CARR & FERRELL LLP
120 CONSTITUTION DRIVE
MENLO PARK, CA 94025

POWER OF ATTORNEY NOTICE

OC000000050177106

Date Mailed: 10/04/2011

NOTICE REGARDING CHANGE OF POWER OF ATTORNEY

This is in response to the Power of Attorney filed 09/27/2011.

- The Power of Attorney to you in this application has been revoked by the assignee who has intervened as provided by 37 CFR 3.71. Future correspondence will be mailed to the new address of record(37 CFR 1.33).

/sleutchit/

Office of Data Management, Application Assistance Unit (571) 272-4000, or (571) 272-4200, or 1-888-786-0101

UNITED STATES PATENT AND TRADEMARK OFFICE

UNITED STATES DEPARTMENT OF COMMERCE
United States Patent and Trademark Office
Address: COMMISSIONER FOR PATENTS
P.O. Box 1450
Alexandria, Virginia 22313-1450
www.uspto.gov

APPLICATION NUMBER	FILING OR 371(C) DATE	FIRST NAMED APPLICANT	ATTY. DOCKET NO./TITLE
10/911,211	10/13/2004	Raman K. Rao	IPHLNZ00501

CONFIRMATION NO. 7409

40518
LEVINE BAGADE HAN LLP
2400 GENG ROAD, SUITE 120
PALO ALTO, CA 94303

POA ACCEPTANCE LETTER

OC000000050177124

Date Mailed: 10/04/2011

NOTICE OF ACCEPTANCE OF POWER OF ATTORNEY

This is in response to the Power of Attorney filed 09/27/2011.

The Power of Attorney in this application is accepted. Correspondence in this application will be mailed to the above address as provided by 37 CFR 1.33.

/sleutchit/

Office of Data Management, Application Assistance Unit (571) 272-4000, or (571) 272-4200, or 1-888-786-0101

UNITED STATES PATENT AND TRADEMARK OFFICE

Commissioner for Patents
United States Patent and Trademark Office
P.O. Box 1450
Alexandria, VA 22313-1450
www.uspto.gov

COURTNEY STANIFORD & GREGORY LLP
PO BOX 9807
SAN JOSE, CA 95157

MAILED

OCT 14 2011

OFFICE OF PETITIONS

In re Application of
Raman K. Rao, et al.
Application No. 10/911,211
Filed: October 13, 2004
Attorney Docket No. IPHLNZ00501

DECISION ON PETITION
TO WITHDRAW
FROM RECORD

This is a decision on the Request to Withdraw as attorney or agent of record under 37 C.F.R. § 1.36(b), filed July 22, 2009.

The request is **DISMISSED** as moot.

A review of the file record indicates that the power of attorney to Courtney, Staniford & Gregory, LLP has been revoked by the assignee of the patent application on December 23, 2009. Accordingly, the request to withdraw under 37 C.F.R. § 1.36(b) is moot.

All future communications from the Office will continue to be directed to the address of record until otherwise notified by applicant.

Telephone inquires concerning this decision should be directed to undersigned at 571-272-1642.

/AMW/
April M. Wise
Petitions Examiner
Office of Petitions

UNITED STATES PATENT AND TRADEMARK OFFICE

Commissioner for Patents
United States Patent and Trademark Office
P.O. Box 1450
Alexandria, VA 22313-1450
www.uspto.gov

MAILED

OCT 14 2011

OFFICE OF PETITIONS

CARR & FERRELL, LLP
2200 GENG ROAD
PALO ALTO, CA 94303

In re Application of :
Raman K. Rao, et al. :
Application No. 10/911,211 : DECISION ON PETITION
Filed: October 13, 2004 : TO WITHDRAW
Attorney Docket No. IPHLNZ00501 : FROM RECORD
:

This is a decision on the Request to Withdraw as attorney or agent of record under 37 C.F.R. § 1.36(b), filed September 28, 2011.

The request is **DISMISSED** as moot.

A review of the file record indicates that the power of attorney to Carr & Ferrell, LLP has been revoked by the assignee of the patent application on September 27, 2011. Accordingly, the request to withdraw under 37 C.F.R. § 1.36(b) is moot.

All future communications from the Office will continue to be directed to the below-listed address until otherwise notified by applicant.

Telephone inquires concerning this decision should be directed to undersigned at 571-272-1642.

/AMW/
April M. Wise
Petitions Examiner
Office of Petitions

Organization _____ Bldg./Room _____

UNITED STATES PATENT AND TRADEMARK OFFICE
P.O. Box 1450
Alexandria, VA. 22313-1450
If Undeliverable Return In Ten Days

Official Business
Penalty For Private Use, $300

AN EQUAL OPPORTUNITY EMPLOYER

UNITED STATES POSTAGE
PITNEY BOWES
02 1M
0004244975
$ 00.44⁰
OCT 14 2011
MAILED FROM ZIP CODE 22314

RECEIVED
OCT 25 2011
USPTO MAIL CENTER

X 941 NFE 1 9100 00 10/21/11
FORWARD TIME EXP RTN TO SEND
:CARR & FERRELL LLP
120 CONSTITUTION DR
MENLO PARK CA 94025-1107

RETURN TO SENDER

943 [illegible] 381

UNITED STATES PATENT AND TRADEMARK OFFICE

IFW

Commissioner for Patents
United States Patent and Trademark Office
P.O. Box 1450
Alexandria, VA 22313-1450
www.uspto.gov

OIPE IAP23
OCT 25 2011
PATENT & TRADEMARK OFFICE

MAILED
OCT 14 2011
OFFICE OF PETITIONS

CARR & FERRELL, LLP
2200 GENG ROAD
PALO ALTO, CA 94303

In re Application of :
Raman K. Rao, et al. :
Application No. 10/911,211 : DECISION ON PETITION
Filed: October 13, 2004 : TO WITHDRAW
Attorney Docket No. IPHLNZ00501 : FROM RECORD
:

This is a decision on the Request to Withdraw as attorney or agent of record under 37 C.F.R. § 1.36(b), filed September 28, 2011.

The request is **DISMISSED** as moot.

A review of the file record indicates that the power of attorney to Carr & Ferrell, LLP has been revoked by the assignee of the patent application on September 27, 2011. Accordingly, the request to withdraw under 37 C.F.R. § 1.36(b) is moot.

All future communications from the Office will continue to be directed to the below-listed address until otherwise notified by applicant.

Telephone inquires concerning this decision should be directed to undersigned at 571-272-1642.

/AMW/
April M. Wise
Petitions Examiner
Office of Petitions

Doc code: RCEX
Doc description: Request for Continued Examination (RCE)

PTO/SB/30EFS (07-09)
Approved for use through 07/31/2012. OMB 0651-0031
U.S. Patent and Trademark Office; U.S. DEPARTMENT OF COMMERCE
Under the Paperwork Reduction Act of 1995, no persons are required to respond to a collection of information unless it contains a valid OMB control number.

REQUEST FOR CONTINUED EXAMINATION(RCE)TRANSMITTAL
(Submitted Only via EFS-Web)

Application Number	10/911,211	Filing Date	2004-10-13	Docket Number (if applicable)	IPHLNZ00501	Art Unit	2617
First Named Inventor	Raman K. RAO et al.			Examiner Name	Michael Irace		

This is a Request for Continued Examination (RCE) under 37 CFR 1.114 of the above-identified application.
Request for Continued Examination (RCE) practice under 37 CFR 1.114 does not apply to any utility or plant application filed prior to June 8, 1995, or to any design application. The Instruction Sheet for this form is located at WWW.USPTO.GOV

SUBMISSION REQUIRED UNDER 37 CFR 1.114

Note: If the RCE is proper, any previously filed unentered amendments and amendments enclosed with the RCE will be entered in the order in which they were filed unless applicant instructs otherwise. If applicant does not wish to have any previously filed unentered amendment(s) entered, applicant must request non-entry of such amendment(s).

☐ Previously submitted. If a final Office action is outstanding, any amendments filed after the final Office action may be considered as a submission even if this box is not checked.

☐ Consider the arguments in the Appeal Brief or Reply Brief previously filed on _____

☐ Other _____

☒ Enclosed

☒ Amendment/Reply

☐ Information Disclosure Statement (IDS)

☐ Affidavit(s)/ Declaration(s)

☒ Other
Petition for Extension of Time

MISCELLANEOUS

☐ Suspension of action on the above-identified application is requested under 37 CFR 1.103(c) for a period of months _____
(Period of suspension shall not exceed 3 months; Fee under 37 CFR 1.17(i) required)

☐ Other _____

FEES

☒ **The RCE fee under 37 CFR 1.17(e) is required by 37 CFR 1.114 when the RCE is filed.**
The Director is hereby authorized to charge any underpayment of fees, or credit any overpayments, to Deposit Account No 503973

SIGNATURE OF APPLICANT, ATTORNEY, OR AGENT REQUIRED

☒ Patent Practitioner Signature

☐ Applicant Signature

PTO/SB/30EFS (07-09)
Approved for use through 07/31/2012. OMB 0651-0031
U.S. Patent and Trademark Office; U.S. DEPARTMENT OF COMMERCE
Under the Paperwork Reduction Act of 1995, no persons are required to respond to a collection of information unless it contains a valid OMB control number.

Signature of Registered U.S. Patent Practitioner			
Signature	/Johney U. Han/	Date (YYYY-MM-DD)	2012-03-28
Name	Johney U. Han	Registration Number	45565

This collection of information is required by 37 CFR 1.114. The information is required to obtain or retain a benefit by the public which is to file (and by the USPTO to process) an application. Confidentiality is governed by 35 U.S.C. 122 and 37 CFR 1.11 and 1.14. This collection is estimated to take 12 minutes to complete, including gathering, preparing, and submitting the completed application form to the USPTO. Time will vary depending upon the individual case. Any comments on the amount of time you require to complete this form and/or suggestions for reducing this burden, should be sent to the Chief Information Officer, U.S. Patent and Trademark Office, U.S. Department of Commerce, P.O. Box 1450, Alexandria, VA 22313-1450.

If you need assistance in completing the form, call 1-800-PTO-9199 and select option 2.

Privacy Act Statement

The Privacy Act of 1974 (P.L. 93-579) requires that you be given certain information in connection with your submission of the attached form related to a patent application or patent. Accordingly, pursuant to the requirements of the Act, please be advised that: (1) the general authority for the collection of this information is 35 U.S.C. 2(b)(2); (2) furnishing of the information solicited is voluntary; and (3) the principal purpose for which the information is used by the U.S. Patent and Trademark Office is to process and/or examine your submission related to a patent application or patent. If you do not furnish the requested information, the U.S. Patent and Trademark Office may not be able to process and/or examine your submission, which may result in termination of proceedings or abandonment of the application or expiration of the patent.

The information provided by you in this form will be subject to the following routine uses:

1. The information on this form will be treated confidentially to the extent allowed under the Freedom of Information Act (5 U.S.C. 552) and the Privacy Act (5 U.S.C. 552a). Records from this system of records may be disclosed to the Department of Justice to determine whether the Freedom of Information Act requires disclosure of these records.

2. A record from this system of records may be disclosed, as a routine use, in the course of presenting evidence to a court, magistrate, or administrative tribunal, including disclosures to opposing counsel in the course of settlement negotiations.

3. A record in this system of records may be disclosed, as a routine use, to a Member of Congress submitting a request involving an individual, to whom the record pertains, when the individual has requested assistance from the Member with respect to the subject matter of the record.

4. A record in this system of records may be disclosed, as a routine use, to a contractor of the Agency having need for the information in order to perform a contract. Recipients of information shall be required to comply with the requirements of the Privacy Act of 1974, as amended, pursuant to 5 U.S.C. 552a(m).

5. A record related to an International Application filed under the Patent Cooperation Treaty in this system of records may be disclosed, as a routine use, to the International Bureau of the World Intellectual Property Organization, pursuant to the Patent Cooperation Treaty.

6. A record in this system of records may be disclosed, as a routine use, to another federal agency for purposes of National Security review (35 U.S.C. 181) and for review pursuant to the Atomic Energy Act (42 U.S.C. 218(c)).

7. A record from this system of records may be disclosed, as a routine use, to the Administrator, General Services, or his/her designee, during an inspection of records conducted by GSA as part of that agency's responsibility to recommend improvements in records management practices and programs, under authority of 44 U.S.C. 2904 and 2906. Such disclosure shall be made in accordance with the GSA regulations governing inspection of records for this purpose, and any other relevant (i.e., GSA or Commerce) directive. Such disclosure shall not be used to make determinations about individuals.

8. A record from this system of records may be disclosed, as a routine use, to the public after either publication of the application pursuant to 35 U.S.C. 122(b) or issuance of a patent pursuant to 35 U.S.C. 151. Further, a record may be disclosed, subject to the limitations of 37 CFR 1.14, as a routine use, to the public if the record was filed in an application which became abandoned or in which the proceedings were terminated and which application is referenced by either a published application, an application open to public inspections or an issued patent.

9. A record from this system of records may be disclosed, as a routine use, to a Federal, State, or local law enforcement agency, if the USPTO becomes aware of a violation or potential violation of law or regulation.

I hereby certify that this correspondence is being electronically transmitted to the USPTO on the date shown below.

Date: March 28, 2012 Signature: /Quyen B. Nguyen/ (Quyen B. Nguyen)

IN THE UNITED STATES PATENT AND TRADEMARK OFFICE

Application No.:	10/911,211
Confirmation No.:	7409
Filing Date:	October 13, 2004
Inventor(s):	Raman K. RAO et al.
Title:	DYNAMICALLY CONFIGURABLE IP BASED WIRELESS DEVICE AND WIRELESS NETWORKS
Examiner:	Michael Irace
Group Art Unit:	2617

RESPONSE TO FINAL OFFICE ACTION

Mail Stop RCE
Commissioner for Patents
P.O. Box 1450
Alexandria, VA 22313-1450

Sir:

This is in response to the final Office Action dated September 28, 2011 for which a response was due on December 28, 2011. Filed herewith is a Petition and fee for a three-month extension of time, thereby extending the deadline for response to March 28, 2012. Accordingly, this response is timely filed. Reconsideration and allowance of the pending claims, as amended, in light of the Remarks presented herein are respectfully requested.

Amendments to the Specification begin on page 2 of this paper.

Amendments to the Claims are reflected in the listing of claims which begins on page 3 of this paper.

Remarks begin on page 6 of this paper.

REMARKS

Claims 36-38 were pending in the present application. By virtue of this response, claims 37-38 have been canceled, claim 36 has been amended, and new claims 41-43 have been added. Accordingly, claims 36 and 39-43 are currently under consideration. Amendment and cancellation of certain claims is not to be construed as a dedication to the public of any of the subject matter of the claims as previously presented. No new matter has been added.

Support for newly added claims 39-43 may be found in the claimed priority Application Serial Nos. 08/764,903 and 09/281,739 (now U.S. Patent No. 6,169,789). In particular, support may be found in U.S. Patent No. 6,169,789 at the following:

- Column 5, lines 21
- Column 6, line 24
- Column 8, lines 40
- Column 14, lines 1-2
- Column 14, lines 36
- Column 16, lines 35
- Column 18, lines 1-5
- Column 21, lines 21 - 25

Support may also be found in the present application at the following:

- Column 7, line 28 "Server C 214 is used to keep various "functional instruction set" and software 218 for use by CT/MD."
- Column 2, lines 30 "In the present invention, a cell phone acts as a radio, TV, and pager to receive and transmit at different frequencies."
- Column 2, lines 50: "In the present invention a phone or other wireless device can be a remote TV controller, .."
- Column 3, lines 52: "When a CT/MD 202 wishes to use the services of Server C 214, the Server C 214 delivers the content or performs functions as requested by the CT/MD 202."
- Column 3, lines 55: "A CT/MD 202 can store profiles and other user specific information on Server C 214."

Rejections under 35 USC §103(a)

A. Claim 36 is rejected under 35 USC §103(a) as allegedly being unpatentable over Zilliacus (US 6,832,230) in view of Shen (US 6,401,059), Watts (US 6,119,186) and Nelakanti (US 6,993,359).

Independent claim 36 has been amended to recite "MD configuration software which is configured to operate and control constituent components of MD hardware". As noted by the Office, these features were previously argued but not recited within the claim; however, Applicant has amended the claim to specifically include these limitations.

Zilliacus fails to teach or disclose the MD configuration software which is configured to operate and control the constituent components of MD hardware, as presently recited. Zilliacus may teach a license which can delete/uninstall itself, however, such a license cannot be said to be configured to operate and control constituent components of MD hardware nor can this license of Zilliacus be said to allow for the constituent components to communicate with one another.

Each of the additionally cited references Shen, Watts, and Nelakanti fail to cure the defects of Zilliacus. Thus, amended claim 36 is patentable over each of the references alone or in combination for at least these reasons. Accordingly, Applicant respectfully requests the reconsideration and withdrawal of the rejection under 35 USC §103(a).

B. Claim 37 is rejected under 35 USC §103(a) as allegedly being unpatentable over Zilliacus in view of Shen, Watts, Nelakanti, and Dunn et al (US 6,591,103).

Independent claim 37 has been canceled thus rendering this rejection moot. Accordingly, Applicant respectfully requests the reconsideration and withdrawal of the rejection under 35 USC §103(a).

C. Claim 38 is rejected under 35 USC §103(a) as allegedly being unpatentable over Zilliacus in view of Shen, Watts, and Nelakanti.

Independent claim 38 has been canceled thus rendering this rejection moot. Accordingly, Applicant respectfully requests the reconsideration and withdrawal of the rejection under 35 USC §103(a).

CONCLUSION

In view of the above, each of the presently pending claims in this application is believed to be in condition for allowance. Accordingly, the Examiner is respectfully requested to withdraw the outstanding rejections and pass this application to issue. If it is determined that a telephone conference would expedite the prosecution of this application, the Examiner is invited to telephone the undersigned at the number given below.

In the event the appropriate fee and/or petition is not filed herewith and the U.S. Patent and Trademark Office determines that an extension and/or other relief is required, Applicant petitions for any required relief including extensions of time and authorize the Commissioner to charge the cost of such petitions and/or other fees due in connection with this filing to **Deposit Account No. 50-3973** referencing Attorney Docket No. **IPHLNZ00501**. However, the Commissioner is not authorized to charge the cost of the issue fee to the Deposit Account.

Respectfully submitted,

/Johney U. Han/

Johney U. Han
Registration No. 45,565

Customer No. 40518
Levine Bagade Han LLP
2400 Geng Road, Suite 120
Palo Alto, CA 94303
Direct: (650) 242-4217
Fax: (650) 284-2180

PTO/SB/22 (09-11)
Approved for use through 07/31/2012. OMB 0651-0031
U.S. Patent and Trademark Office; U.S. DEPARMENT OF COMMERCE
Under the paperwork Reduction Act of 1995, no persons are required to respond to a collection of information unless it displays a valid OMB control number.

PETITION FOR EXTENSION OF TIME UNDER 37 CFR 1.136(a)	Docket Number (Optional) IPHLNZ00501
Application Number 10/911,211	Filed October 13, 2004
For DYNAMICALLY CONFIGURABLE IP BASED WIRELESS DEVICE AND WIRELESS NETWORKS	
Art Unit 2617	Examiner Michael Irace

This is a request under the provisions of 37 CFR 1.136(a) to extend the period for filing a reply in the above identified application.

The requested extension and fee are as follows (check time period desired and enter the appropriate fee below):

	Fee	Small Entity Fee	
☐ One month (37 CFR 1.17(a)(1))	$150	$75	$
☐ Two months (37 CFR 1.17(a)(2))	$560	$280	$
☑ Three months (37 CFR 1.17(a)(3))	$1270	$635	$ 635
☐ Four months (37 CFR 1.17(a)(4))	$1980	$990	$
☐ Five months (37 CFR 1.17(a)(5))	$2690	$1345	$

☑ Applicant claims small entity status. See 37 CFR 1.27.

☐ A check in the amount of the fee is enclosed.

☑ Payment by credit card. ~~Form PTO-2038 is attached.~~

☐ The Director has already been authorized to charge fees in this application to a Deposit Account.

☑ The Director is hereby authorized to charge any fees which may be required, or credit any overpayment, to Deposit Account Number 50-3973.

WARNING: Information on this form may become public. Credit card information should not be included on this form. Provide credit card information and authorization on PTO-2038.

I am the

☐ applicant/inventor.

☐ assignee of record of the entire interest. See 37 CFR 3.71. Statement under 37 CFR 3.73(b) is enclosed (Form PTO/SB/96).

☑ attorney or agent of record. Registration Number 45,565

☐ attorney or agent under 37 CFR 1.34. Registration number if acting under 37 CFR 1.34 _____

/Johney U. Han/ — Signature

March 28, 2012 — Date

Johney U. Han — Typed or printed name

(650) 242-4217 — Telephone Number

NOTE: Signatures of all the inventors or assignees of record of the entire interest or their representative(s) are required. Submit multiple forms if more than one signature is required, see below.

☑ Total of 1 forms are submitted.

This collection of information is required by 37 CFR 1.136(a). The information is required to obtain or retain a benefit by the public which is to file (and by the USPTO to process) an application. Confidentiality is governed by 35 U.S.C. 122 and 37 CFR 1.11 and 1.14. This collection is estimated to take 6 minutes to complete, including gathering, preparing, and submitting the completed application form to the USPTO. Time will vary depending upon the individual case. Any comments on the amount of time you require to complete this form and/or suggestions for reducing this burden, should be sent to the Chief Information Officer, U.S. Patent and Trademark Office, U.S. Department of Commerce, P.O. Box 1450, Alexandria, VA 22313-1450. DO NOT SEND FEES OR COMPLETED FORMS TO THIS ADDRESS. **SEND TO: Commissioner for Patents, P.O. Box 1450, Alexandria, VA 22313-1450.**

If you need assistance in completing the form, call 1-800-PTO-9199 and select option 2.

Electronic Patent Application Fee Transmittal

Application Number:	10911211
Filing Date:	13-Oct-2004
Title of Invention:	Dynamically configurable IP based wireless device and wireless networks
First Named Inventor/Applicant Name:	Raman K. Rao
Filer:	Johney U. Han/Quyen Nguyen
Attorney Docket Number:	IPHLNZ00501

Filed as Small Entity

Utility under 35 USC 111(a) Filing Fees

Description	Fee Code	Quantity	Amount	Sub-Total in USD($)
Basic Filing:				
Pages:				
Claims:				
Miscellaneous-Filing:				
Petition:				
Patent-Appeals-and-Interference:				
Post-Allowance-and-Post-Issuance:				
Extension-of-Time:				
Extension - 3 months with $0 paid	2253	1	635	635

Description	Fee Code	Quantity	Amount	Sub-Total in USD($)
Miscellaneous:				
Request for continued examination	2801	1	465	465
		Total in USD ($)		**1100**

Electronic Acknowledgement Receipt

EFS ID:	12418250
Application Number:	10911211
International Application Number:	
Confirmation Number:	7409
Title of Invention:	Dynamically configurable IP based wireless device and wireless networks
First Named Inventor/Applicant Name:	Raman K. Rao
Customer Number:	40518
Filer:	Johney U. Han/Quyen Nguyen
Filer Authorized By:	Johney U. Han
Attorney Docket Number:	IPHLNZ00501
Receipt Date:	28-MAR-2012
Filing Date:	13-OCT-2004
Time Stamp:	19:27:12
Application Type:	Utility under 35 USC 111(a)

Payment information:

Submitted with Payment	yes
Payment Type	Credit Card
Payment was successfully received in RAM	$1100
RAM confirmation Number	6398
Deposit Account	
Authorized User	

File Listing:

Document Number	Document Description	File Name	File Size(Bytes)/ Message Digest	Multi Part /.zip	Pages (if appl.)

1	Request for Continued Examination (RCE)	1_IPHLNZ00501_20120328_rce_efs.pdf	697488 2ae2e2fcc57085711c9e9e57f3eb79385821d4d8	no	3
Warnings:					
Information:					
2		2_IPHLNZ00501_20120328_response_final_oa.pdf	1521304 37e0483de5ae0c2fa4e7e7604197275b39c01a98	yes	8

	Multipart Description/PDF files in .zip description		
	Document Description	**Start**	**End**
	Amendment Submitted/Entered with Filing of CPA/RCE	1	1
	Specification	2	2
	Claims	3	5
	Applicant Arguments/Remarks Made in an Amendment	6	8

Warnings:					
Information:					
3	Extension of Time	3_IPHLNZ00501_20120328_extension_of_time.pdf	300131 c30bf73b14ab7b99d6c1917f1930344c74d768c1	no	1
Warnings:					
Information:					
4	Fee Worksheet (SB06)	fee-info.pdf	32148 c949bd23204b84a98be560e1a07a3e140a7f2d98	no	2
Warnings:					
Information:					
		Total Files Size (in bytes):	2551071		

This Acknowledgement Receipt evidences receipt on the noted date by the USPTO of the indicated documents, characterized by the applicant, and including page counts, where applicable. It serves as evidence of receipt similar to a Post Card, as described in MPEP 503.

New Applications Under 35 U.S.C. 111
If a new application is being filed and the application includes the necessary components for a filing date (see 37 CFR 1.53(b)-(d) and MPEP 506), a Filing Receipt (37 CFR 1.54) will be issued in due course and the date shown on this Acknowledgement Receipt will establish the filing date of the application.

National Stage of an International Application under 35 U.S.C. 371
If a timely submission to enter the national stage of an international application is compliant with the conditions of 35 U.S.C. 371 and other applicable requirements a Form PCT/DO/EO/903 indicating acceptance of the application as a national stage submission under 35 U.S.C. 371 will be issued in addition to the Filing Receipt, in due course.

New International Application Filed with the USPTO as a Receiving Office
If a new international application is being filed and the international application includes the necessary components for an international filing date (see PCT Article 11 and MPEP 1810), a Notification of the International Application Number and of the International Filing Date (Form PCT/RO/105) will be issued in due course, subject to prescriptions concerning national security, and the date shown on this Acknowledgement Receipt will establish the international filing date of the application.

PTO/SB/06 (07-06)
Approved for use through 1/31/2007. OMB 0651-0032
U.S. Patent and Trademark Office; U.S. DEPARTMENT OF COMMERCE
Under the Paperwork Reduction Act of 1995, no persons are required to respond to a collection of information unless it displays a valid OMB control number.

PATENT APPLICATION FEE DETERMINATION RECORD

Substitute for Form PTO-875

Application or Docket Number	Filing Date	☐ To be Mailed
10/911,211	10/13/2004	

APPLICATION AS FILED – PART I

	(Column 1)	(Column 2)	SMALL ENTITY ☒		OR	OTHER THAN SMALL ENTITY	
FOR	NUMBER FILED	NUMBER EXTRA	RATE ($)	FEE ($)		RATE ($)	FEE ($)
☐ BASIC FEE (37 CFR 1.16(a), (b), or (c))	N/A	N/A	N/A			N/A	
☐ SEARCH FEE (37 CFR 1.16(k), (i), or (m))	N/A	N/A	N/A			N/A	
☐ EXAMINATION FEE (37 CFR 1.16(o), (p), or (q))	N/A	N/A	N/A			N/A	
TOTAL CLAIMS (37 CFR 1.16(i))	minus 20 =	*	X $ =		OR	X $ =	
INDEPENDENT CLAIMS (37 CFR 1.16(h))	minus 3 =	*	X $ =			X $ =	
☐ APPLICATION SIZE FEE (37 CFR 1.16(s))	If the specification and drawings exceed 100 sheets of paper, the application size fee due is $250 ($125 for small entity) for each additional 50 sheets or fraction thereof. See 35 U.S.C. 41(a)(1)(G) and 37 CFR 1.16(s).						
☐ MULTIPLE DEPENDENT CLAIM PRESENT (37 CFR 1.16(j))							
* If the difference in column 1 is less than zero, enter "0" in column 2.			TOTAL			TOTAL	

APPLICATION AS AMENDED – PART II

AMENDMENT	03/28/2012	(Column 1) CLAIMS REMAINING AFTER AMENDMENT		(Column 2) HIGHEST NUMBER PREVIOUSLY PAID FOR	(Column 3) PRESENT EXTRA	SMALL ENTITY RATE ($)	ADDITIONAL FEE ($)	OR	OTHER THAN SMALL ENTITY RATE ($)	ADDITIONAL FEE ($)
	Total (37 CFR 1.16(i))	* 6	Minus	** 23	=	X $ =		OR	X $ =	
	Independent (37 CFR 1.16(h))	* 4	Minus	***4	=	X $ =		OR	X $ =	
	☐ Application Size Fee (37 CFR 1.16(s))									
	☐ FIRST PRESENTATION OF MULTIPLE DEPENDENT CLAIM (37 CFR 1.16(j))							OR		
						TOTAL ADD'L FEE		OR	TOTAL ADD'L FEE	

AMENDMENT		(Column 1) CLAIMS REMAINING AFTER AMENDMENT		(Column 2) HIGHEST NUMBER PREVIOUSLY PAID FOR	(Column 3) PRESENT EXTRA	RATE ($)	ADDITIONAL FEE ($)		RATE ($)	ADDITIONAL FEE ($)
	Total (37 CFR 1.16(i))	*	Minus	**	=	X $ =		OR	X $ =	
	Independent (37 CFR 1.16(h))	*	Minus	***	=	X $ =		OR	X $ =	
	☐ Application Size Fee (37 CFR 1.16(s))									
	☐ FIRST PRESENTATION OF MULTIPLE DEPENDENT CLAIM (37 CFR 1.16(j))							OR		
						TOTAL ADD'L FEE		OR	TOTAL ADD'L FEE	

* If the entry in column 1 is less than the entry in column 2, write "0" in column 3.

** If the "Highest Number Previously Paid For" IN THIS SPACE is less than 20, enter "20".

*** If the "Highest Number Previously Paid For" IN THIS SPACE is less than 3, enter "3".

The "Highest Number Previously Paid For" (Total or Independent) is the highest number found in the appropriate box in column 1.

Legal Instrument Examiner:
/JACQUELINE WEIR/

This collection of information is required by 37 CFR 1.16. The information is required to obtain or retain a benefit by the public which is to file (and by the USPTO to process) an application. Confidentiality is governed by 35 U.S.C. 122 and 37 CFR 1.14. This collection is estimated to take 12 minutes to complete, including gathering, preparing, and submitting the completed application form to the USPTO. Time will vary depending upon the individual case. Any comments on the amount of time you require to complete this form and/or suggestions for reducing this burden, should be sent to the Chief Information Officer, U.S. Patent and Trademark Office, U.S. Department of Commerce, P.O. Box 1450, Alexandria, VA 22313-1450. DO NOT SEND FEES OR COMPLETED FORMS TO THIS ADDRESS. **SEND TO: Commissioner for Patents, P.O. Box 1450, Alexandria, VA 22313-1450.**

If you need assistance in completing the form, call 1-800-PTO-9199 and select option 2.

AMENDMENTS TO THE SPECIFICATION

On page 1, please amend the "CROSS REFERENCE TO RELATED APPLICATIONS" paragraph beginning on line 9 as follows:

The present application is a divisional of U.S. Application No. 09/591,381 filed June 9, 2000 (now U.S. Patent No. 7,929,950) which is a continuation-in-part of copending application entitled INTELLIGENT KEYBOARD SYSTEM, Serial No. 09/281,739, filed June 4, 1999, (now U.S. Patent No. 6,169,789) which is a continuation-in-part application of a now abandoned application entitled A SYSTEM LEVEL SCHEME TO CONTROL INTELLIGENT APPLIANCES, Serial No. 08/764,903 filed December 16, 1996.

AMENDMENTS TO THE CLAIMS

This listing of claims will replace all prior versions, and listings, of claims in the application:

In the claims

1.-35. (Canceled).

36. (Currently Amended): ~~In a mobile communication system, a~~ A method for ~~configuring~~ a mobile ~~communication~~ device (MD), the method comprising:

storing data on a server, the data comprising a plurality of functional instruction sets, content, software, or [[and]] MD configuration software which is configured to operate and control components of MD hardware;

the MD ~~remotely~~ requesting ~~a mode configuration of~~ software or a functional instruction set from the server,

wherein the MD downloads software or the functional instruction set from the server,

wherein the MD stores the software or the functional instruction set in a storage medium, and

wherein the MD includes one or more functions of a cellular telephone, PDA, handheld computer, or multifunction communication device

~~wherein the server configures the MD as one or more of a plurality of intelligent devices comprising a cell phone, a remote TV controller, and a remote controller of a plurality of devices;~~

~~configuring the MD for a selected set of functions including communication, computation, command, sensing and control;~~

~~establishing the plurality of functional instructions for dynamic reconfiguration of the MD from one of the selected sets of functions to another;~~

~~alternatively accessing one of the plurality of functional instruction sets from a storage device on the MD, wherein the storage device comprises at least one lookup table;~~

~~executing a dynamic reconfiguration of the MD using one of,~~

~~the processing and storage capabilities of the MD;~~

~~the processing and storage capabilities of the server; and~~

~~processing and storage capabilities of the MD in conjunction with the processing and storage capabilities of the server;~~

~~the MD downloading from the server a macro command, wherein the macro command enables the MD to control a specific intelligent device;~~

~~the MD dynamically reconfiguring to transmit and receive in a plurality of environments, comprising an office environment, a home environment, an Internet protocol (IP) environment, and a plurality of public carrier environments; and~~

~~the MD sensing an environment the MD is primarily operating in, and maintaining an ability to switch instantaneously to a different environment~~.

37.-38. (Canceled).

39. (New): A system comprising:

a server,

wherein the server stores in memory software or functional instructions sets for a wireless device,

wherein the server sends to the wireless device software or functional instruction sets,

wherein the server stores profiles or other user specific information, and

wherein the wireless device includes one or more functions of a cellular telephone, PDA, handheld computer, or multifunction communication device.

40. (New): The system of claim 39, wherein the profiles contain information for both a user and a device.

41. (New): A wireless electronic device, the device comprising:

a processor;

a memory;

a unit for wireless communication;

wherein the device is capable of voice and data communication,

wherein the device connects to a server,

wherein the device downloads a software application or a functional instruction set from a server,

wherein the software or the functional instruction set is configured to operate and control components of device hardware,

wherein the device includes one or more functions of a cellular telephone, PDA, handheld computer, or multifunction communication device, and

wherein the software or the functional instruction set is associated with a user and a device.

42. (New): The device of claim 40, wherein the device downloads an application to function as a remote control for one or more devices including a television.

43. (New): A non-transitory computer readable storage medium for a wireless device comprising:

an application software to be run by a processor on a wireless device, wherein the wireless device includes the functions of a cellular telephone, PDA, handheld computer, or multifunction communication device,

wherein the device is configured to send a request to a server or device, and

wherein the request consists of a control function for a television.

UNITED STATES PATENT AND TRADEMARK OFFICE

UNITED STATES DEPARTMENT OF COMMERCE
United States Patent and Trademark Office
Address: COMMISSIONER FOR PATENTS
P.O. Box 1450
Alexandria, Virginia 22313-1450
www.uspto.gov

APPLICATION NO.	FILING DATE	FIRST NAMED INVENTOR	ATTORNEY DOCKET NO.	CONFIRMATION NO.
10/911,211	10/13/2004	Raman K. Rao	IPHLNZ00501	7409

40518 7590 06/18/2013

LEVINE BAGADE HAN LLP
2400 GENG ROAD, SUITE 120
PALO ALTO, CA 94303

EXAMINER	
IRACE, MICHAEL	
ART UNIT	PAPER NUMBER
2644	
MAIL DATE	DELIVERY MODE
06/18/2013	PAPER

Please find below and/or attached an Office communication concerning this application or proceeding.

The time period for reply, if any, is set in the attached communication.

Office Action Summary	Application No. 10/911,211	Applicant(s) RAO ET AL.	
	Examiner MICHAEL IRACE	Art Unit 2644	AIA (First Inventor to File) Status No

-- The MAILING DATE of this communication appears on the cover sheet with the correspondence address --

Period for Reply

A SHORTENED STATUTORY PERIOD FOR REPLY IS SET TO EXPIRE *3* MONTH(S) OR THIRTY (30) DAYS, WHICHEVER IS LONGER, FROM THE MAILING DATE OF THIS COMMUNICATION.

- Extensions of time may be available under the provisions of 37 CFR 1.136(a). In no event, however, may a reply be timely filed after SIX (6) MONTHS from the mailing date of this communication.
- If NO period for reply is specified above, the maximum statutory period will apply and will expire SIX (6) MONTHS from the mailing date of this communication.
- Failure to reply within the set or extended period for reply will, by statute, cause the application to become ABANDONED (35 U.S.C. § 133). Any reply received by the Office later than three months after the mailing date of this communication, even if timely filed, may reduce any earned patent term adjustment. See 37 CFR 1.704(b).

Status

1)☒ Responsive to communication(s) filed on *28 March 2012*.

☐ A declaration(s)/affidavit(s) under **37 CFR 1.130(b)** was/were filed on _____.

2a)☐ This action is **FINAL**. 2b)☒ This action is non-final.

3)☐ An election was made by the applicant in response to a restriction requirement set forth during the interview on _____; the restriction requirement and election have been incorporated into this action.

4)☐ Since this application is in condition for allowance except for formal matters, prosecution as to the merits is closed in accordance with the practice under *Ex parte Quayle*, 1935 C.D. 11, 453 O.G. 213.

Disposition of Claims

5)☒ Claim(s) *36 and 39-43* is/are pending in the application.

5a) Of the above claim(s) _____ is/are withdrawn from consideration.

6)☐ Claim(s) _____ is/are allowed.

7)☒ Claim(s) *36 and39-43* is/are rejected.

8)☐ Claim(s) _____ is/are objected to.

9)☐ Claim(s) _____ are subject to restriction and/or election requirement.

* If any claims have been determined allowable, you may be eligible to benefit from the **Patent Prosecution Highway** program at a participating intellectual property office for the corresponding application. For more information, please see http://www.uspto.gov/patents/init_events/pph/index.jsp or send an inquiry to PPHfeedback@uspto.gov.

Application Papers

10)☐ The specification is objected to by the Examiner.

11)☐ The drawing(s) filed on _____ is/are: a)☐ accepted or b)☐ objected to by the Examiner.

Applicant may not request that any objection to the drawing(s) be held in abeyance. See 37 CFR 1.85(a).

Replacement drawing sheet(s) including the correction is required if the drawing(s) is objected to. See 37 CFR 1.121(d).

Priority under 35 U.S.C. § 119

12)☐ Acknowledgment is made of a claim for foreign priority under 35 U.S.C. § 119(a)-(d) or (f).

Certified copies:

a)☐ All b)☐ Some * c)☐ None of the:

1.☐ Certified copies of the priority documents have been received.

2.☐ Certified copies of the priority documents have been received in Application No. _____.

3.☐ Copies of the certified copies of the priority documents have been received in this National Stage application from the International Bureau (PCT Rule 17.2(a)).

* See the attached detailed Office action for a list of the certified copies not received.

Interim copies:

a)☐ All b)☐ Some c)☐ None of the: Interim copies of the priority documents have been received.

Attachment(s)

1) ☒ Notice of References Cited (PTO-892)

2) ☐ Information Disclosure Statement(s) (PTO/SB/08) Paper No(s)/Mail Date _____.

3) ☐ Interview Summary (PTO-413) Paper No(s)/Mail Date. _____ .

4) ☐ Other: _____.

DETAILED ACTION

Response to Arguments

1. Applicant's arguments with respect to claims 36-43 have been considered but are moot because the arguments do not apply to any of the references being used in the current rejection.

Claim Rejections - 35 USC § 103

1. The following is a quotation of 35 U.S.C. 103(a) which forms the basis for all obviousness rejections set forth in this Office action:

> (a) A patent may not be obtained though the invention is not identically disclosed or described as set forth in section 102 of this title, if the differences between the subject matter sought to be patented and the prior art are such that the subject matter as a whole would have been obvious at the time the invention was made to a person having ordinary skill in the art to which said subject matter pertains. Patentability shall not be negatived by the manner in which the invention was made.

2. The factual inquiries set forth in *Graham* v. *John Deere Co.*, 383 U.S. 1, 148 USPQ 459 (1966), that are applied for establishing a background for determining obviousness under 35 U.S.C. 103(a) are summarized as follows:

1. Determining the scope and contents of the prior art.
2. Ascertaining the differences between the prior art and the claims at issue.
3. Resolving the level of ordinary skill in the pertinent art.
4. Considering objective evidence present in the application indicating obviousness or nonobviousness.

3. Claims 41 and 36 are rejected under 35 U.S.C. 103(a) as being unpatentable over Ondeck (US 2002/0046083) in view of Bates (US 6,628,964)

With regard to Claim 41and 36, " A wireless electronic device, the device comprising: a processor; a memory; a unit for wireless communication;" *Ondeck discloses a wireless communication device with a processor (paragraph 20)*

"wherein the device connects to a server, wherein the device downloads a software application or a functional instruction set from a server," *Ondeck discloses downloading a software application content from an internet server (paragraphs 20 and 32)*

"wherein the software or the functional instruction set is configured to operate and control components of device hardware, wherein the device includes one or more functions of a cellular telephone, PDA, handheld computer, or multifunction communication device, and wherein the software or the functional instruction set is associated with a user and a device." *Ondeck discloses the software application is configured to control device hardware such as display, memory and processor to customize a PDA (paragraphs 20) wherein said software is associated with the user and device (paragraphs 19 and 25)*

"wherein the device is capable of voice and data communication" *Ondeck discloses a device capable of data communication such as PDA or programmable remote control device (paragraph 20) but does not explicitly disclose that the device is capable of voice communication.*

Bates discloses a universal remote controller that is coupled to a voice communication device such as a telephone (Abstract and Figure 3).

It would have been obvious to one of ordinary skill in the art at the time the invention was made to combine the system above with the combination phone/remote controller as disclosed by Bates. The motivation for such a combination is use of a known technique in an analogous art to combine two devices into one and thereby providing the user with increased functionality.

4. Claim 43 is rejected under 35 U.S.C. 103(a) as being unpatentable over Ondeck (US 2002/0046083) in view of Van Ee (6,937,972).

With regard to Claim 43, " A non-transitory computer readable storage medium for a wireless device comprising: an application software to be run by a processor on a wireless device, wherein the wireless device includes the functions of a cellular telephone, PDA, handheld computer, or multifunction communication device," *Ondeck discloses the software application is configured to control device hardware such as display, memory and processor to customize a PDA (paragraphs 20)*

"wherein the device is configured to send a request to a server or device, and wherein the request consists of a control function for a television". *Ondeck does not explicitly disclose this, however Van Ee which is incorporated by reference discloses a programmable multifunction device that receives via the internet of program controls for a TV (Column 5 lines 15-42 and lines 60-65)*

It would have been obvious to one of ordinary skill in the art at the time the invention was made to combine the system above with the inclusion of TV control for programmable multifunction device. The motivation for a combination is use of a known technique in an analogous art (reprogrammable devices) to increase user friendliness of programmable tv remote (Column 4 lines 46-50)

Claim Rejections - 35 USC § 102

5. The following is a quotation of the appropriate paragraphs of 35 U.S.C. 102 that form the basis for the rejections under this section made in this Office action:

> A person shall be entitled to a patent unless –
>
> (e) the invention was described in (1) an application for patent, published under section 122(b), by another filed in the United States before the invention by the applicant for patent or (2) a patent granted on an application for patent by another filed in the United States before the invention by the applicant for patent, except that an international application filed under the treaty defined in section 351(a) shall have the effects for purposes of this subsection of an application filed in the United States only if the international application designated the United States and was published under Article 21(2) of such treaty in the English language.

6. Claims 39 -40 are rejected under 35 U.S.C. 102(e) as being anticipated by Ondeck (US 2002/0046083).

With regard to Claim 39, " A system comprising: a server, wherein the server stores in memory software or functional instructions sets for a wireless device, wherein the server sends to the wireless device software or functional instruction sets," *Ondeck*

discloses a wireless communication device with a processor, wherein the server sends the wireless device software for functional instruction sets (paragraphs 19-21)

"wherein the server stores profiles or other user specific information," *Ondeck disclose a server storing profile information for specific users and devices (paragraphs 25 and 19)*

"and wherein the wireless device includes one or more functions of a cellular telephone, PDA, handheld computer, or multi function communication device. *Ondeck discloses the software application is configured to control device hardware such as display, memory and processor to customize a PDA (paragraphs 20)*

With regard to Claim 40, " The system of claim 39, wherein the profiles contain information for both a user and a device." *Ondeck discloses sending profile information including information identifying the user and the equipment (paragraphs 19, 25)*

7. Claim 43 is rejected under 35 U.S.C. 103(a) as being unpatentable over Ondeck (US 2002/0046083) in further view of Van Ee (6,937,972).

With regard to Claim 42, " The device of claim 40, wherein the device downloads an application to function as a remote control for one or more devices including a television". *Ondeck does not explicitly disclose this, however Van Ee which is*

incorporated by reference discloses a programmable multifunction device that receives via the internet of program controls for a TV (Column 5 lines 15-42 and lines 60-65)

It would have been obvious to one of ordinary skill in the art at the time the invention was made to combine the system above with the inclusion of TV control for programmable multifunction device. The motivation for a combination is use of a known technique in an analogous art (reprogrammable devices) to increase user friendliness of programmable tv remote (Column 4 lines 46-50)

Conclusion

Any inquiry concerning this communication or earlier communications from the examiner should be directed to MICHAEL IRACE whose telephone number is (571)270-7273. The examiner can normally be reached on Monday through Friday 8:00am to 5:30pm.

If attempts to reach the examiner by telephone are unsuccessful, the examiner's supervisor, Patrick Edouard can be reached on (571)272-7603. The fax phone number for the organization where this application or proceeding is assigned is 571-273-8300.

Information regarding the status of an application may be obtained from the Patent Application Information Retrieval (PAIR) system. Status information for published applications may be obtained from either Private PAIR or Public PAIR. Status information for unpublished applications is available through Private PAIR only. For more information about the PAIR system, see http://pair-direct.uspto.gov. Should you have questions on access to the Private PAIR system, contact the Electronic Business Center (EBC) at 866-217-9197 (toll-free). If you would like assistance from a USPTO Customer Service Representative or access to the automated information system, call 800-786-9199 (IN USA OR CANADA) or 571-272-1000.

/MICHAEL IRACE/
Examiner, Art Unit 2644

/Patrick N. Edouard/

Supervisory Patent Examiner, Art Unit 2644

Notice of References Cited	Application/Control No. 10/911,211	Applicant(s)/Patent Under Reexamination RAO ET AL.	
	Examiner MICHAEL IRACE	Art Unit 2644	Page 1 of 1

U.S. PATENT DOCUMENTS

*		Document Number Country Code-Number-Kind Code	Date MM-YYYY	Name	Classification
*	A	US-6,628,964	09-2003	Bates et al.	455/556.1
*	B	US-6,937,972	08-2005	Van Ee, Jan	703/20
*	C	US-2002/0046083	04-2002	ONDECK, KRISTEN DIANE	705/14
	D	US-			
	E	US-			
	F	US-			
	G	US-			
	H	US-			
	I	US-			
	J	US-			
	K	US-			
	L	US-			
	M	US-			

FOREIGN PATENT DOCUMENTS

*		Document Number Country Code-Number-Kind Code	Date MM-YYYY	Country	Name	Classification
	N					
	O					
	P					
	Q					
	R					
	S					
	T					

NON-PATENT DOCUMENTS

*		Include as applicable: Author, Title Date, Publisher, Edition or Volume, Pertinent Pages)
	U	
	V	
	W	
	X	

*A copy of this reference is not being furnished with this Office action. (See MPEP § 707.05(a).)
Dates in MM-YYYY format are publication dates. Classifications may be US or foreign.

Index of Claims	Application/Control No.	Applicant(s)/Patent Under Reexamination
	10911211	RAO ET AL.
	Examiner	Art Unit
	DAVID WANG	2617

✓	Rejected	-	Cancelled	N	Non-Elected	A	Appeal
=	Allowed	÷	Restricted	I	Interference	O	Objected

☐ Claims renumbered in the same order as presented by applicant ☐ CPA ☐ T.D. ☐ R.1.47

CLAIM		DATE								
Final	Original	03/14/2008	12/09/2010	09/21/2011	06/12/2013					
	1	-	-	-	-					
	2	-	-	-	-					
	3	-	-	-	-					
	4	-	-	-	-					
	5	-	-	-	-					
	6	-	-	-	-					
	7	-	-	-	-					
	8	-	-	-	-					
	9	-	-	-	-					
	10	-	-	-	-					
	11	-	-	-	-					
	12	-	-	-	-					
	13	-	-	-	-					
	14	-	-	-	-					
	15	-	-	-	-					
	16	-	-	-	-					
	17	-	-	-	-					
	18	-	-	-	-					
	19	-	-	-	-					
	20	-	-	-	-					
	21	-	-	-	-					
	22	-	-	-	-					
	23	-	-	-	-					
	24	-	-	-	-					
	25	-	-	-	-					
	26	-	-	-	-					
	27	-	-	-	-					
	28	-	-	-	-					
	29	-	-	-	-					
	30	-	-	-	-					
	31	-	-	-	-					
	32	-	-	-	-					
	33	-	-	-	-					
	34	-	-	-	-					
	35	-	-	-	-					
	36	✓	✓	✓	✓					

Index of Claims	Application/Control No.	Applicant(s)/Patent Under Reexamination
	10911211	RAO ET AL.
	Examiner	Art Unit
	DAVID WANG	2617

✓	Rejected	-	Cancelled	N	Non-Elected	A	Appeal
=	Allowed	÷	Restricted	I	Interference	O	Objected

☐ Claims renumbered in the same order as presented by applicant ☐ CPA ☐ T.D. ☐ R.1.47

CLAIM		DATE								
Final	Original	03/14/2008	12/09/2010	09/21/2011	06/12/2013					
	37	✓	✓	✓	-					
	38		✓	✓	-					
	39				✓					
	40				✓					
	41				✓					
	42				✓					
	43				✓					

EAST Search History

EAST Search History (Prior Art)

Ref #	Hits	Search Query	DBs	Default Operator	Plurals	Time Stamp
L1	2	"20020046083"	US-PGPUB; USPAT; USOCR; FPRS; EPO; JPO; DERWENT; IBM_TDB	ADJ	OFF	2013/06/11 23:41
L2	18	"6,545,587"	US-PGPUB; USPAT; USOCR; FPRS; EPO; JPO; DERWENT; IBM_TDB	ADJ	OFF	2013/06/11 23:47
L3	133	(van ee.in.)	US-PGPUB; USPAT; USOCR; FPRS; EPO; JPO; DERWENT; IBM_TDB	ADJ	OFF	2013/06/11 23:48
L4	38	(van ee.in.) and remote	US-PGPUB; USPAT; USOCR; FPRS; EPO; JPO; DERWENT; IBM_TDB	ADJ	OFF	2013/06/11 23:48
L5	9	(van ee.in.) and remote and tv and server	US-PGPUB; USPAT; USOCR; FPRS; EPO; JPO; DERWENT; IBM_TDB	ADJ	OFF	2013/06/11 23:50
L6	125126	(van ee.in.) and remote and tv or television and server	US-PGPUB; USPAT; USOCR; FPRS; EPO; JPO; DERWENT; IBM_TDB	ADJ	OFF	2013/06/11 23:52
L7	9	(van ee.in.) and remote and (tv or television) and server	US-PGPUB; USPAT; USOCR; FPRS; EPO; JPO; DERWENT; IBM_TDB	ADJ	OFF	2013/06/11 23:52
L8	23	(van ee.in.) and remote and (tv or television)	US-PGPUB; USPAT; USOCR; FPRS; EPO; JPO; DERWENT; IBM_TDB	ADJ	OFF	2013/06/11 23:52
L9	40	remote with universal with phone and @ad<"20020505"	US-PGPUB; USPAT; USOCR; FPRS; EPO; JPO; DERWENT; IBM_TDB	ADJ	OFF	2013/06/11 23:54

EAST Search History (Interference)

<This search history is empty>

6/12/2013 12:36:04 AM
C:\Users\mirace\Documents\EAST\Workspaces\1023.wsp

Search Notes	Application/Control No.	Applicant(s)/Patent Under Reexamination
	10911211	RAO ET AL.
	Examiner	Art Unit
	DAVID WANG	2617

CPC- SEARCHED		
Symbol	Date	Examiner

CPC COMBINATION SETS - SEARCHED		
Symbol	Date	Examiner

US CLASSIFICATION SEARCHED			
Class	Subclass	Date	Examiner
455709710	461221104	3/14/20083/14/20083/14/2008	DWDWDW

SEARCH NOTES		
Search Notes	Date	Examiner
please see attachedconsulted Duc Nguyen SPE regarding the use of the Logitech Harmony remote controllergoogle search for "(buy OR purchase) applications from mobile phone"google search for "finding network with GPS location" and "(detecting OR sensing) (home OR office OR work) environment GPS"consulted Huy PhanSearch East see attached.	3/14/20083/11/200812/3/201012/9/201012/9/2010	DWDWDWDWDW

INTERFERENCE SEARCH			
US Class/ CPC Symbol	US Subclass / CPC Group	Date	Examiner

I hereby certify that this correspondence is being electronically transmitted to the USPTO on the date shown below.
Date: December 18, 2013 Signature: /Quyen B. Nguyen/ (Quyen B. Nguyen)

IN THE UNITED STATES PATENT AND TRADEMARK OFFICE

Application No.:	10/911,211
Confirmation No.:	7409
Filing Date:	October 13, 2004
Inventor(s):	Raman K. Rao et al.
Title:	Dynamically Configurable IP Based Wireless Device and Wireless Networks
Examiner:	Michael Irace
Group Art Unit:	2644

RESPONSE TO NON-FINAL OFFICE ACTION

Mail Stop Amendment
Commissioner for Patents
P.O. Box 1450
Alexandria, VA 22313-1450

Sir:

This is in response to the non-final Office Action dated June 18, 2013 for which a response was due on September 18, 2013. Filed herewith is a Petition and fee for a three-month extension of time, thereby extending the deadline for response to December 18, 2013. Accordingly, this response is timely filed. Reconsideration and allowance of the pending claims, as amended, in light of the Remarks presented herein are respectfully requested.

Amendments to the Claims are reflected in the listing of claims which begins on page 2 of this paper.

Remarks begin on page 9 of this paper.

AMENDMENTS TO THE CLAIMS

This listing of claims will replace all prior versions, and listings, of claims in the application:

In the claims

1.-35. (Canceled).

36. (Currently Amended): A method for a mobile device [[(MD)]] using a server, the method comprising:

accepting an upload of software to a server configured for use by a plurality of mobile devices and further configured to provide a plurality of different software functions to mobile devices;

storing data on [[a]] the server, the data comprising a plurality of functional instruction sets, ~~content,~~ software, or [[MD]] mobile device configuration software which is configured to operate and control components of [[MD]] mobile device hardware, wherein said server is at a remote location from the one or more mobile devices, and wherein the server is accessible over an Internet Protocol network;

configuring the server to be used for by the one or more mobile devices;

configuring the one or more mobile devices to use the server to download the software using a configuration setting;

wherein the [[MD]] mobile device remotely requests ~~requesting~~ software ~~or a functional instruction set~~ from the server using a wireless network,

wherein the server stores in a storage medium an association of the software with the mobile device and a user profile,

wherein the [[MD]] mobile device downloads software or [[the]] a functional instruction set from the server,

wherein the [[MD]] mobile device stores the software or the functional instruction set in a storage medium, and

wherein the [[MD]] mobile device includes one or more functions of a cellular telephone, PDA, handheld computer, or multifunction communication device, or combinations thereof, and

wherein a processor of the mobile device is configured to execute the software or functional instruction sets so as to control the hardware of the mobile device.

37.-38. (Canceled).

39. (Currently Amended): A system comprising:

a remote server, the server configured to store wireless device software for a plurality of different functions or applications for use by a plurality of wireless devices,

wherein the remote server stores in memory software or functional instructions sets for a wireless device,

wherein the remote server sends to the wireless device software or functional instruction sets,

wherein the remote server stores profiles or other user specific information, [[and]]

wherein the one or more wireless devices are configured for voice and data communication,

wherein the wireless device includes one or more functions of a cellular telephone, PDA, handheld computer, or multifunction communication device, or combinations thereof,

wherein the wireless device is configured to download the software from the remote server using an Internet data network,

wherein the software is configured for use by the wireless device,

wherein the software controls a plurality of hardware components on the wireless device, and

wherein the server is enabled to provide a plurality of software and instruction sets for control of the wireless device for receipt by the wireless device.

40. (Currently Amended): The system of claim 39, wherein the profiles contain information for both a user and [[a]] the wireless device.

41. (Currently Amended): A wireless electronic device or mobile device, the device comprising:

a processor;

a memory;

a unit for wireless communication;

wherein the device is capable of voice and data communication,

wherein the device connects to a server,

wherein the device downloads a software application or a functional instruction set from [[a]] the server,

wherein the software or the functional instruction set is configured to operate and control components of device hardware,

wherein the device includes one or more functions of a cellular telephone, PDA, handheld computer, or multifunction communication device, or combinations thereof, [[and]]

wherein the software or the functional instruction set is associated with a user and [[a]] the device stored in a profile,

wherein the wireless device is configured to download a plurality of software from the server,

wherein the server is configured to store software or functional instruction sets for a plurality of wireless devices and for a plurality of applications for the plurality of wireless devices, and

wherein the mobile device identifies a set of software to be downloaded from the server.

42. (Previously Presented): The device of claim 40, wherein the device downloads an application to function as a remote control for one or more devices including a television.

43. (Currently Amended): A system comprising:

a wireless device or mobile device including functions of one or more of a cellular telephone, PDA, handheld computer, or multifunction communication device or combinations thereof, the wireless device configured to receive a non-transitory computer readable medium from a server located at a remote location separate from the wireless device, the server configured to store a plurality of different application software or functional instructions for a plurality of wireless devices, one of the software application including a non-transitory computer readable storage medium for a wireless device comprising:

an application software to be run by a processor on [[a]] the wireless device~~, wherein the wireless device includes the functions of a cellular telephone, PDA, handheld computer, or multifunction communication device~~,

wherein the wireless device is in further communication with a television configured to receive wireless commands over a network,

wherein the wireless device is configured to send a request to the television ~~a server or device~~, [[and]]

wherein the request comprises ~~consists of~~ a control function for [[a]] the television,

wherein the wireless device is configured to send said commands using a local home IP network, and

wherein the communication between the television and the wireless device is over a IP based network as part of a home network.

44. (New): The system of claim 43, wherein the wireless device is configured to communicate directly to the television.

45. (New): The system of claim 43, wherein the wireless device is configured to communicate a set of commands to a server, the server configured to communicate said commands to the television.

46. (New): The system of claim 43, wherein the wireless device is configured to communicate a set of commands over a network to a network switch box over a wireless local area network, and wherein the network switch box is configured to transmit said commands to a television.

47. (New): The system of claims 36, wherein the server provides software for the configuration of the mobile or wireless device as an IP telephone.

48. (New): The system of claims 36, wherein the download of the software is based on a hierarchy of network paths.

49. (New): The system of claims 36, wherein the device is configured to queue various software applications for downloading at a later time in response to the type of network bandwidth.

50. (New): The system of claims 36, wherein the device is configured with GPS for location sensing and uses location to determine when to download a software application data and from which server to download the application.

51. (New): The system of claims 36, wherein the mobile device is configured to download an application for controlling a garage door opener.

52. (New): The system of claims 36, wherein the mobile device is configured to function as an internet protocol IP phone.

53. (New): The system of claims 36, wherein the server is colocated with a wireless carrier.

54. (New): The system of claims 36, wherein the server is collocated with a wireless hardware vendor.

55. (New): The system of claims 36, wherein the server is colocated with an office network.

56. (New): The system of claims 36, wherein the mobile device downloads a software application to control a copier.

57. (New): The system of claims 39, wherein responsive to a request from the one or more wireless device to a website or URL associated with a website server or a network environment, the one or more wireless device receives an indicator of a software application to be downloaded from the remote server,

58. (New): The system of claims 57, wherein the downloading of said software is placed into an inactive download state when the device is connected to a first type of network, and

wherein the wireless device is enabled with a configuration mode such that responsive to connecting to a second network type the mobile device downloads the software from the servers.

59. (New): The system of claims 39, wherein the device is configured to queue various software application content for downloading at a later time in response to a set of networks available and a configuration associated with the networks.

60. (New): The system of claims 39, wherein the device is configured with GPS for location sensing and uses location to determine when to download a software application data and from which server to download the application.

61. (New): The system of claims 39, wherein the device is configured to download an application for controlling a garage door opener.

62. (New): The system of claims 39, wherein the device is configured to function as an internet protocol IP phone.

63. (New): The system of claims 39, wherein the server is collocated with a wireless carrier.

64. (New): The system of claims 39, wherein the server is collocated with a wireless hardware vendor.

65. (New): The system of claims 39, wherein the server is colocated with an office network.

66. (New): The system of claims 39, wherein the wireless device downloads an application to control a copier.

67. (New): The system of claims 41, wherein the device is configured to queue various software application content for downloading at a later time in response to a set of networks available and a configuration associated with the networks.

68. (New): The system of claim 41, wherein the downloading of said software is placed into an inactive download state when the device is connected to a first type of network, and

wherein the mobile device is enabled with a configuration mode such that responsive to connecting to a second network type the mobile device downloads the software from the servers.

69. (New): The system of claim 41, wherein the server provides software for the configuration of the mobile or wireless device as an IP (Internet Protocol) telephone.

70. (New): The system of claim 41, wherein the download of the application is based on a hierarchy of network paths.

71. (New): The system of claim 41, wherein the download of the software is based on the available bandwidth of a first network and a second network.

72. (New): The system of claim 41, wherein the download of the software is based on a request to a URL associated with a server.

REMARKS

Claims 36 and 39-43 were pending in the present application. By virtue of this response, claims 36, 39, 40-41, and 43 have been amended and new claims 44-72 have been added. Accordingly, claims 36 and 39-72 are currently under consideration. Amendment and cancellation of certain claims is not to be construed as a dedication to the public of any of the subject matter of the claims as previously presented. No new matter has been added.

Rejections under 35 U.S.C. §103

A. Claims 36 and 41 are rejected under 35 U.S.C. §103(a) as allegedly being unpatentable over Ondeck (US 2002/0046083) in view of Bates (US 6,628,964).

Independent claims 36 and 41 have been amended as indicated herewith. With respect to Ondeck, this reference (as proffered by the Office) "discloses downloading a software application content from an internet server (paragraphs 20 and 32)" (Office Action, p. 3, para. 2) and is directed to customizing advertising content. Such advertising content cannot be equivalent to software or functional instruction sets which control the hardware of a mobile device, as presently claimed, as such advertising content by its nature cannot provide command and control to the hardware of the mobile device.

Moreover, Ondeck further teaches where "… currently, a manufacturer may add an extra software application to an electronic device. The manufacturer would have to manually install this software or add a disk to the package, for all versions of Product X that are to go to Retailer Y." (Ondeck, [0011].) As further described, "… the user is instructed how to download a software application or content information via the Internet 210 into his/her PC 206. Electronic device202 is thereupon connected via a cable or via wireless communication to PC 206 for being upgraded or customized by means of the data or application previously downloaded into PC 206." The result of which is that the user is required "to download a software application or content information via the Internet 210 into his/her PC" (*Id.*, [0020]) and then connect "connected via a cable or via wireless communication to PC 206 for being upgraded or customized." (*Id.*, [0020].)

Hence, Ondeck requires a multistep system involving a local PC to access software content and fails to teach or suggest software being downloaded directly from a server. For

instance, the present claims recite "wherein said server is at a remote location from the one or more mobile devices, and wherein the server is accessible over an Internet Protocol network" and further where the mobile devices use the server to download the software directly from the server.

Turning now to Bates, Bates also fails to teach or suggest a network-based control of mobile devices. Hence, Ondeck fails to teach or suggest the newly added limitations and Bates fails to cure the defects of Ondeck. Therefore, independent claims 36 and 41 are patentable over the references alone or in combination. Newly added claims depend ultimately from respective independent claims 36 and 41 and are patentable for at least the same reasons.

Accordingly, Applicant respectfully requests the reconsideration and withdrawal of the rejection under 35 U.S.C. §103(a).

B. Claim 43 is rejected under 35 U.S.C. §103(a) as allegedly being unpatentable over Ondeck in view of Van Ee (US 6,937,972).

Independent claim 43 has been amended as indicated herewith. Turning now to Van Ee, this reference fails to teach or suggest multifunction devices but only discloses single function devices. Hence, Ondeck fails to teach or suggest the newly added limitations, for at least the same reasons above, and Van Ee fails to cure the defects of Ondeck. Therefore, independent claim 43 is patentable over the references alone or in combination. Newly added claims depend ultimately from respective independent claim 43 and are patentable for at least the same reasons.

Accordingly, Applicant respectfully requests the reconsideration and withdrawal of the rejection under 35 U.S.C. §103(a).

Rejections under 35 U.S.C. §102

Claims 39 and 40 are rejected under 35 U.S.C. §102(e) as allegedly being anticipated by Ondeck.

Independent claim 39 been amended as indicated herewith. Ondeck fails to show or describe the newly added limitations, as discussed above. Therefore, independent claim 39 is

patentable over Ondeck. Dependent claim 40 and newly added claims depend ultimately from independent claims 39 and are patentable for at least the same reasons.

Accordingly, Applicant respectfully requests the reconsideration and withdrawal of the rejection under 35 U.S.C. §102(e).

CONCLUSION

In view of the above, each of the presently pending claims in this application is believed to be in condition for allowance. Accordingly, the Examiner is respectfully requested to withdraw the outstanding rejections and pass this application to issue. If it is determined that a telephone conference would expedite the prosecution of this application, the Examiner is invited to telephone the undersigned at the number given below.

In the event the appropriate fee and/or petition is not filed herewith and the U.S. Patent and Trademark Office determines that an extension and/or other relief is required, Applicant petitions for any required relief including extensions of time and authorize the Commissioner to charge the cost of such petitions and/or other fees due in connection with this filing to **Deposit Account No. 50-3973** referencing Attorney Docket No. **IPHLNZ00501**. However, the Commissioner is not authorized to charge the cost of the issue fee to the Deposit Account.

Respectfully submitted,

/Johney U. Han/

Johney U. Han
Registration No. 45,565

Customer No. 40518
Levine Bagade Han LLP
2400 Geng Road, Suite 120
Palo Alto, CA 94303
Direct: (650) 242-4217
Fax: (650) 284-2180

PTO/AIA/22 (03-13)
Approved for use through 3/31/2013. OMB 0651-0031
U.S. Patent and Trademark Office; U.S. DEPARTMENT OF COMMERCE
Under the Paperwork Reduction Act of 1995, no persons are required to respond to a collection of information unless it displays a valid OMB control number.

PETITION FOR EXTENSION OF TIME UNDER 37 CFR 1.136(a)

Docket Number (Optional): IPHLNZ00501

Application Number: 10/911,211

Filed: October 13, 2004

For: Dynamically Configurable IP Based Wireless Device and Wireless Networks

Art Unit: 2644

Examiner: Michael Irace

This is a request under the provisions of 37 CFR 1.136(a) to extend the period for filing a reply in the above-identified application.

The requested extension and fee are as follows (check time period desired and enter the appropriate fee below):

		Fee	Small Entity Fee	Micro Entity Fee	
☐	One month (37 CFR 1.17(a)(1))	$200	$100	$50	$
☐	Two months (37 CFR 1.17(a)(2))	$600	$300	$150	$
☑	Three months (37 CFR 1.17(a)(3))	$1,400	$700	$350	$ 700
☐	Four months (37 CFR 1.17(a)(4))	$2,200	$1,100	$550	$
☐	Five months (37 CFR 1.17(a)(5))	$3,000	$1,500	$750	$

☑ Applicant asserts small entity status. See 37 CFR 1.27.

☐ Applicant certifies micro entity status. See 37 CFR 1.29.
Form PTO/SB/15A or B or equivalent must either be enclosed or have been submitted previously.

☐ A check in the amount of the fee is enclosed.

☐ Payment by credit card. Form PTO-2038 is attached.

☐ The Director has already been authorized to charge fees in this application to a Deposit Account.

☑ The Director is hereby authorized to charge any fees which may be required, or credit any overpayment, to Deposit Account Number 50-3973.

☑ Payment made via EFS-Web.

WARNING: Information on this form may become public. Credit card information should not be included on this form. Provide credit card information and authorization on PTO-2038.

I am the

☐ applicant.

☑ attorney or agent of record. Registration number 45,565.

☐ attorney or agent acting under 37 CFR 1.34. Registration number _____.

/Johney U. Han/ — Signature

December 18, 2013 — Date

Johney U. Han — Typed or printed name

(650) 242-4217 — Telephone Number

NOTE: This form must be signed in accordance with 37 CFR 1.33. See 37 CFR 1.4 for signature requirements and certifications. Submit multiple forms if more than one signature is required, see below*.

☑ * Total of 1 forms are submitted.

This collection of information is required by 37 CFR 1.136(a). The information is required to obtain or retain a benefit by the public, which is to file (and by the USPTO to process) an application. Confidentiality is governed by 35 U.S.C. 122 and 37 CFR 1.11 and 1.14. This collection is estimated to take 6 minutes to complete, including gathering, preparing, and submitting the completed application form to the USPTO. Time will vary depending upon the individual case. Any comments on the amount of time you require to complete this form and/or suggestions for reducing this burden should be sent to the Chief Information Officer, U.S. Patent and Trademark Office, U.S. Department of Commerce, P.O. Box 1450, Alexandria, VA 22313-1450. DO NOT SEND FEES OR COMPLETED FORMS TO THIS ADDRESS. SEND TO: Mail Stop PCT, Commissioner for Patents, P.O. Box 1450, Alexandria, VA 22313-1450.

Electronic Patent Application Fee Transmittal

Application Number:	10911211
Filing Date:	13-Oct-2004
Title of Invention:	Dynamically configurable IP based wireless device and wireless networks
First Named Inventor/Applicant Name:	Raman K. Rao
Filer:	Johney U. Han/Quyen Nguyen
Attorney Docket Number:	IPHLNZ00501

Filed as Small Entity

Utility under 35 USC 111(a) Filing Fees

Description	Fee Code	Quantity	Amount	Sub-Total in USD($)
Basic Filing:				
Pages:				
Claims:				
Claims in excess of 20	2202	12	40	480
Miscellaneous-Filing:				
Petition:				
Patent-Appeals-and-Interference:				
Post-Allowance-and-Post-Issuance:				
Extension-of-Time:				

Description	Fee Code	Quantity	Amount	Sub-Total in USD($)
Extension - 3 months with $0 paid	2253	1	700	700
Miscellaneous:				
		Total in USD ($)		**1180**

Electronic Acknowledgement Receipt

EFS ID:	17693452
Application Number:	10911211
International Application Number:	
Confirmation Number:	7409
Title of Invention:	Dynamically configurable IP based wireless device and wireless networks
First Named Inventor/Applicant Name:	Raman K. Rao
Customer Number:	40518
Filer:	Johney U. Han/Quyen Nguyen
Filer Authorized By:	Johney U. Han
Attorney Docket Number:	IPHLNZ00501
Receipt Date:	18-DEC-2013
Filing Date:	13-OCT-2004
Time Stamp:	13:03:32
Application Type:	Utility under 35 USC 111(a)

Payment information:

Submitted with Payment	yes
Payment Type	Credit Card
Payment was successfully received in RAM	$1180
RAM confirmation Number	11912
Deposit Account	
Authorized User	

File Listing:

Document Number	Document Description	File Name	File Size(Bytes)/ Message Digest	Multi Part /.zip	Pages (if appl.)

1		1_IPHLNZ00501_20131218_response_non-final_oa.pdf	3435325 a428351d3aecf60f893e677484900959ab92d34d	yes	12

Multipart Description/PDF files in .zip description		
Document Description	**Start**	**End**
Amendment/Req. Reconsideration-After Non-Final Reject	1	1
Claims	2	8
Applicant Arguments/Remarks Made in an Amendment	9	12

Warnings:

Information:

2	Extension of Time	2_IPHLNZ00501_20131218_extension_of_time.pdf	328083 9157af80fce62ba900d486494b21050ad831a9c6	no	1

Warnings:

Information:

3	Fee Worksheet (SB06)	fee-info.pdf	32261 29639c76e8d7b603cdf3bb1c3822334a5c991449	no	2

Warnings:

Information:

Total Files Size (in bytes):	3795669

This Acknowledgement Receipt evidences receipt on the noted date by the USPTO of the indicated documents, characterized by the applicant, and including page counts, where applicable. It serves as evidence of receipt similar to a Post Card, as described in MPEP 503.

New Applications Under 35 U.S.C. 111
If a new application is being filed and the application includes the necessary components for a filing date (see 37 CFR 1.53(b)-(d) and MPEP 506), a Filing Receipt (37 CFR 1.54) will be issued in due course and the date shown on this Acknowledgement Receipt will establish the filing date of the application.

National Stage of an International Application under 35 U.S.C. 371
If a timely submission to enter the national stage of an international application is compliant with the conditions of 35 U.S.C. 371 and other applicable requirements a Form PCT/DO/EO/903 indicating acceptance of the application as a national stage submission under 35 U.S.C. 371 will be issued in addition to the Filing Receipt, in due course.

New International Application Filed with the USPTO as a Receiving Office
If a new international application is being filed and the international application includes the necessary components for an international filing date (see PCT Article 11 and MPEP 1810), a Notification of the International Application Number and of the International Filing Date (Form PCT/RO/105) will be issued in due course, subject to prescriptions concerning national security, and the date shown on this Acknowledgement Receipt will establish the international filing date of the application.

PTO/SB/06 (09-11)
Approved for use through 1/31/2014. OMB 0651-0032
U.S. Patent and Trademark Office; U.S. DEPARTMENT OF COMMERCE
Under the Paperwork Reduction Act of 1995, no persons are required to respond to a collection of information unless it displays a valid OMB control number.

PATENT APPLICATION FEE DETERMINATION RECORD Substitute for Form PTO-875	Application or Docket Number 10/911,211	Filing Date 10/13/2004	☐ To be Mailed

ENTITY: ☐ LARGE ☒ SMALL ☐ MICRO

APPLICATION AS FILED – PART I

	(Column 1)	(Column 2)		
FOR	NUMBER FILED	NUMBER EXTRA	RATE ($)	FEE ($)
☐ BASIC FEE (37 CFR 1.16(a), (b), or (c))	N/A	N/A	N/A	
☐ SEARCH FEE (37 CFR 1.16(k), (i), or (m))	N/A	N/A	N/A	
☐ EXAMINATION FEE (37 CFR 1.16(o), (p), or (q))	N/A	N/A	N/A	
TOTAL CLAIMS (37 CFR 1.16(i))	minus 20 =	*	X $ =	
INDEPENDENT CLAIMS (37 CFR 1.16(h))	minus 3 =	*	X $ =	
☐ APPLICATION SIZE FEE (37 CFR 1.16(s))	If the specification and drawings exceed 100 sheets of paper, the application size fee due is $310 ($155 for small entity) for each additional 50 sheets or fraction thereof. See 35 U.S.C. 41(a)(1)(G) and 37 CFR 1.16(s).			
☐ MULTIPLE DEPENDENT CLAIM PRESENT (37 CFR 1.16(j))				
* If the difference in column 1 is less than zero, enter "0" in column 2.			TOTAL	

APPLICATION AS AMENDED – PART II

		(Column 1)		(Column 2)	(Column 3)		
	12/18/2013	CLAIMS REMAINING AFTER AMENDMENT		HIGHEST NUMBER PREVIOUSLY PAID FOR	PRESENT EXTRA	RATE ($)	ADDITIONAL FEE ($)
AMENDMENT	Total (37 CFR 1.16(i))	* 34	Minus	** 23	= 11	X $40 =	440
	Independent (37 CFR 1.16(h))	* 4	Minus	***4	= 0	X $210 =	0
	☐ Application Size Fee (37 CFR 1.16(s))						
	☐ FIRST PRESENTATION OF MULTIPLE DEPENDENT CLAIM (37 CFR 1.16(j))						
						TOTAL ADD'L FEE	**440**

		(Column 1)		(Column 2)	(Column 3)		
		CLAIMS REMAINING AFTER AMENDMENT		HIGHEST NUMBER PREVIOUSLY PAID FOR	PRESENT EXTRA	RATE ($)	ADDITIONAL FEE ($)
AMENDMENT	Total (37 CFR 1.16(i))	*	Minus	**	=	X $ =	
	Independent (37 CFR 1.16(h))	*	Minus	***	=	X $ =	
	☐ Application Size Fee (37 CFR 1.16(s))						
	☐ FIRST PRESENTATION OF MULTIPLE DEPENDENT CLAIM (37 CFR 1.16(j))						
						TOTAL ADD'L FEE	

* If the entry in column 1 is less than the entry in column 2, write "0" in column 3.
** If the "Highest Number Previously Paid For" IN THIS SPACE is less than 20, enter "20".
*** If the "Highest Number Previously Paid For" IN THIS SPACE is less than 3, enter "3".
The "Highest Number Previously Paid For" (Total or Independent) is the highest number found in the appropriate box in column 1.

LIE
/GOIGA DUCKETT/

This collection of information is required by 37 CFR 1.16. The information is required to obtain or retain a benefit by the public which is to file (and by the USPTO to process) an application. Confidentiality is governed by 35 U.S.C. 122 and 37 CFR 1.14. This collection is estimated to take 12 minutes to complete, including gathering, preparing, and submitting the completed application form to the USPTO. Time will vary depending upon the individual case. Any comments on the amount of time you require to complete this form and/or suggestions for reducing this burden, should be sent to the Chief Information Officer, U.S. Patent and Trademark Office, U.S. Department of Commerce, P.O. Box 1450, Alexandria, VA 22313-1450. DO NOT SEND FEES OR COMPLETED FORMS TO THIS ADDRESS. **SEND TO: Commissioner for Patents, P.O. Box 1450, Alexandria, VA 22313-1450.**
If you need assistance in completing the form, call 1-800-PTO-9199 and select option 2.

UNITED STATES PATENT AND TRADEMARK OFFICE

UNITED STATES DEPARTMENT OF COMMERCE
United States Patent and Trademark Office
Address: COMMISSIONER FOR PATENTS
P.O. Box 1450
Alexandria, Virginia 22313-1450
www.uspto.gov

APPLICATION NO.	FILING DATE	FIRST NAMED INVENTOR	ATTORNEY DOCKET NO.	CONFIRMATION NO.
10/911,211	10/13/2004	Raman K. Rao	IPHLNZ00501	7409

40518 7590 05/06/2014
LEVINE BAGADE HAN LLP
2400 GENG ROAD, SUITE 120
PALO ALTO, CA 94303

EXAMINER	
IRACE, MICHAEL	
ART UNIT	PAPER NUMBER
2644	
MAIL DATE	DELIVERY MODE
05/06/2014	PAPER

Please find below and/or attached an Office communication concerning this application or proceeding.

The time period for reply, if any, is set in the attached communication.

Office Action Summary	Application No. 10/911,211	Applicant(s) RAO ET AL.	
	Examiner MICHAEL IRACE	Art Unit 2644	AIA (First Inventor to File) Status No

-- The MAILING DATE of this communication appears on the cover sheet with the correspondence address --

Period for Reply

A SHORTENED STATUTORY PERIOD FOR REPLY IS SET TO EXPIRE *3* MONTHS FROM THE MAILING DATE OF THIS COMMUNICATION.

- Extensions of time may be available under the provisions of 37 CFR 1.136(a). In no event, however, may a reply be timely filed after SIX (6) MONTHS from the mailing date of this communication.
- If NO period for reply is specified above, the maximum statutory period will apply and will expire SIX (6) MONTHS from the mailing date of this communication.
- Failure to reply within the set or extended period for reply will, by statute, cause the application to become ABANDONED (35 U.S.C. § 133). Any reply received by the Office later than three months after the mailing date of this communication, even if timely filed, may reduce any earned patent term adjustment. See 37 CFR 1.704(b).

Status

1)☒ Responsive to communication(s) filed on *12/18/2013*.

☐ A declaration(s)/affidavit(s) under **37 CFR 1.130(b)** was/were filed on _____.

2a)☒ This action is **FINAL**. 2b)☐ This action is non-final.

3)☐ An election was made by the applicant in response to a restriction requirement set forth during the interview on _____; the restriction requirement and election have been incorporated into this action.

4)☐ Since this application is in condition for allowance except for formal matters, prosecution as to the merits is closed in accordance with the practice under *Ex parte Quayle*, 1935 C.D. 11, 453 O.G. 213.

Disposition of Claims*

5)☒ Claim(s) *36-72* is/are pending in the application.

5a) Of the above claim(s) _____ is/are withdrawn from consideration.

6)☐ Claim(s) _____ is/are allowed.

7)☒ Claim(s) *36-72* is/are rejected.

8)☐ Claim(s) _____ is/are objected to.

9)☐ Claim(s) _____ are subject to restriction and/or election requirement.

* If any claims have been determined allowable, you may be eligible to benefit from the **Patent Prosecution Highway** program at a participating intellectual property office for the corresponding application. For more information, please see http://www.uspto.gov/patents/init_events/pph/index.jsp or send an inquiry to PPHfeedback@uspto.gov.

Application Papers

10)☐ The specification is objected to by the Examiner.

11)☐ The drawing(s) filed on _____ is/are: a)☐ accepted or b)☐ objected to by the Examiner.

Applicant may not request that any objection to the drawing(s) be held in abeyance. See 37 CFR 1.85(a).

Replacement drawing sheet(s) including the correction is required if the drawing(s) is objected to. See 37 CFR 1.121(d).

Priority under 35 U.S.C. § 119

12)☐ Acknowledgment is made of a claim for foreign priority under 35 U.S.C. § 119(a)-(d) or (f).

Certified copies:

a)☐ All b)☐ Some** c)☐ None of the:

1.☐ Certified copies of the priority documents have been received.

2.☐ Certified copies of the priority documents have been received in Application No. _____.

3.☐ Copies of the certified copies of the priority documents have been received in this National Stage application from the International Bureau (PCT Rule 17.2(a)).

** See the attached detailed Office action for a list of the certified copies not received.

Attachment(s)

1) ☒ Notice of References Cited (PTO-892)

2) ☐ Information Disclosure Statement(s) (PTO/SB/08a and/or PTO/SB/08b) Paper No(s)/Mail Date _____.

3) ☐ Interview Summary (PTO-413) Paper No(s)/Mail Date. _____ .

4) ☐ Other: _____.

1. The present application is being examined under the pre-AIA first to invent provisions.

DETAILED ACTION

Response to Arguments

1. Applicant's arguments with respect to claims 36-43 have been considered but are moot because the arguments do not apply to any of the references being used in the current rejection.

Claim Rejections - 35 USC § 112

1. The following is a quotation of the first paragraph of 35 U.S.C. 112(a):

> (a) IN GENERAL.—The specification shall contain a written description of the invention, and of the manner and process of making and using it, in such full, clear, concise, and exact terms as to enable any person skilled in the art to which it pertains, or with which it is most nearly connected, to make and use the same, and shall set forth the best mode contemplated by the inventor or joint inventor of carrying out the invention.

The following is a quotation of the first paragraph of pre-AIA 35 U.S.C. 112:

> The specification shall contain a written description of the invention, and of the manner and process of making and using it, in such full, clear, concise, and exact terms as to enable any person skilled in the art to which it pertains, or with which it is most nearly connected, to make and use the same, and shall set forth the best mode contemplated by the inventor of carrying out his invention.

1. Claims 48 and 70 are rejected under 35 U.S.C. 112(a) or 35 U.S.C. 112 (pre-AIA), first paragraph, as failing to comply with the written description requirement. The claim(s) contains subject matter which was not described in the specification in such a way as to reasonably convey to one skilled in the relevant art that the inventor or a joint

inventor, or for pre-AIA the inventor(s), at the time the application was filed, had possession of the claimed invention. Claims 48 and 70 disclose downloading based off a hierarchy of network paths. The examiner is unable to find support for this limitation.

1. Claims 56 and 66 are rejected under 35 U.S.C. 112(a) or 35 U.S.C. 112 (pre-AIA), first paragraph, as failing to comply with the written description requirement. The claim(s) contains subject matter which was not described in the specification in such a way as to reasonably convey to one skilled in the relevant art that the inventor or a joint inventor, or for pre-AIA the inventor(s), at the time the application was filed, had possession of the claimed invention. Claims 56 and 66 disclose using the remote device to control a copier. The examiner is unable to find support for this limitation.

2. Claim 49, 59 and 67 are rejected under 35 U.S.C. 112(a) or 35 U.S.C. 112 (pre-AIA), first paragraph, as failing to comply with the written description requirement. The claim(s) contains subject matter which was not described in the specification in such a way as to reasonably convey to one skilled in the relevant art that the inventor or a joint inventor, or for pre-AIA the inventor(s), at the time the application was filed, had possession of the claimed invention. The claims state “wherein the device is configured to queue various software applications for downloading at a later time in response to the type of network bandwidth”. The examiner is unable to find support for this limitation.

Claims 54 and 64 are rejected under 35 U.S.C. 112(a) or 35 U.S.C. 112 (pre-AIA), first paragraph, as failing to comply with the written description requirement. The claim(s) contains subject matter which was not described in the specification in such a way as to reasonably convey to one skilled in the relevant art that the inventor or a joint inventor, or for pre-AIA the inventor(s), at the time the application was filed, had possession of the claimed invention. The Claim discloses "wherein the server is collocated with a wireless hardware vendor". The examiner is unable to find support for this limitation.

3. Claims 58,68 71 is rejected under 35 U.S.C. 112(a) or 35 U.S.C. 112 (pre-AIA), first paragraph, as failing to comply with the written description requirement. The claim(s) contains subject matter which was not described in the specification in such a way as to reasonably convey to one skilled in the relevant art that the inventor or a joint inventor, or for pre-AIA the inventor(s), at the time the application was filed, had possession of the claimed invention. Claim 71 discloses "wherein the download of the software is based on the available bandwidth of a first network and a second network". The examiner is unable to find support for this limitation.

4. Claims 50 and 60 are rejected under 35 U.S.C. 112(a) or 35 U.S.C. 112 (pre-AIA), first paragraph, as failing to comply with the written description requirement. The

claim(s) contains subject matter which was not described in the specification in such a way as to reasonably convey to one skilled in the relevant art that the inventor or a joint inventor, or for pre-AIA the inventor(s), at the time the application was filed, had possession of the claimed invention. Claims disclose "device is configured with GPS for location sensing and uses location to determine when to download a software application data and from which server to download the application". Examiner is unable to find support for this limitation.

Claim Rejections - 35 USC § 103

1. The following is a quotation of 35 U.S.C. 103(a) which forms the basis for all obviousness rejections set forth in this Office action:

> (a) A patent may not be obtained though the invention is not identically disclosed or described as set forth in section 102 of this title, if the differences between the subject matter sought to be patented and the prior art are such that the subject matter as a whole would have been obvious at the time the invention was made to a person having ordinary skill in the art to which said subject matter pertains. Patentability shall not be negatived by the manner in which the invention was made.

2. The factual inquiries set forth in *Graham* v. *John Deere Co.*, 383 U.S. 1, 148 USPQ 459 (1966), that are applied for establishing a background for determining obviousness under 35 U.S.C. 103(a) are summarized as follows:

1. Determining the scope and contents of the prior art.
2. Ascertaining the differences between the prior art and the claims at issue.
3. Resolving the level of ordinary skill in the pertinent art.
4. Considering objective evidence present in the application indicating obviousness or nonobviousness.

3. Claims 41 and 36 are rejected under 35 U.S.C. 103(a) as being unpatentable over Ondeck (US 2002/0046083) in view of Bates (US 6,628,964) and Bell (7,894,474)

With regard to Claim 41and 36, " A wireless electronic device or mobile device, the device comprising: a processor; a memory; a unit for wireless communication;" *Ondeck discloses a wireless communication device with a processor (paragraph 20)*

"wherein the device connects to a server, wherein the device downloads a software application or a functional instruction set from the server," *Ondeck discloses downloading a software application content from an internet server (paragraphs 20 and 32)*

"wherein the software or the functional instruction set is configured to operate and control components of device hardware, wherein the device includes one or more functions of a cellular telephone, PDA, handheld computer, or multifunction communication device or combinations thereof, and wherein the software or the functional instruction set is associated with a user and the device stored in a profile." *Ondeck discloses the software application is configured to control device hardware such as display, memory and processor to customize a PDA (paragraphs 20) wherein said software is associated with the user and device (paragraphs 19 and 25)*

"wherein the wireless device is configured to download a plurality of software from the server" *Ondeck discloses downloading a plurality of software application content from an internet server (paragraphs 20 and 32)*

"wherein the server is configured to store software or functional instruction sets for a plurality of wireless devices and for a plurality of applications for the plurality of

wireless devices, and" *Ondeck discloses the server storing a plurality of functional software sets for download for applications of a target appliance (paragraph 32).*

_"wherein the device is capable of voice and data communication" and "wherein the mobile device identifies a set of software to be downloaded from the server". Onedeck does not explicitly disclose this.

In an analogous art, Bell discloses a user programmable device that downloads application specific software via a user input and selection (Figure 10 and Column 6 lines 37-65). Wherein the mobile device may be incorporate cellular telephone functions (Figures 1 and 2 and Column 4 lines 25-35)

It would have been obvious to one of ordinary skill in the art at the time the invention was made to combine the system above with the teaching of a mobile phone selecting an application for download as taught by Bell. The motivation for such a combination is use of a known technique in an analogous art to allow the user to select the appropriate device via the phone and thereby increase compatibility to existing devices.

With regard to Claim 39, " A system comprising: a remote server the server configured to store wireless devices software for a plurality of different functions or

applications for use by a plurality of wireless devices , wherein the remote server stores in memory software or functional instructions sets for a wireless device, wherein the remote server sends to the wireless device software or functional instruction sets," *Ondeck discloses a wireless communication device with a processor, wherein the server sends the wireless device software for functional instruction sets (paragraphs 19-21)*

"wherein the remote server stores profiles or other user specific information," *Ondeck disclose a server storing profile information for specific users and devices (paragraphs 25 and 19)*

"and wherein the wireless device includes one or more functions of a cellular telephone, PDA, handheld computer, or multi function communication device or combinations thereof" *Ondeck discloses the software application is configured to control device hardware such as display, memory and processor to customize a PDA (paragraphs 20)*

"wherein the wireless device is configured to download the software from the remote server using an Internet data network, wherein the software is configured for use by the wireless device" *Ondeck discloses downloading a plurality of software application content from an internet server (paragraphs 20 and 32)*

"wherein the software controls a plurality of hardware components on the wireless device and" *Wherein the software controls a plurality of hardware components such as the display, processor ram etc (paragraphs 20 and 32)*

"wherein the server is enabled to provide a plurality of software and instruction sets for control of the wireless device for receipt by the wireless device". *Ondeck discloses the server storing a plurality of functional software sets for download for applications of a target appliance (paragraph 32).*

"wherein the one or more wireless devices are configured for voice and data communication," In an analogous art, Bell discloses a user programmable device that downloads application specific software via a user input and selection (Figure 10 and Column 6 lines 37-65). Wherein the mobile device may be incorporate cellular telephone functions and thus voice communication (Figures 1 and 2 and Column 4 lines 25-35)

It would have been obvious to one of ordinary skill in the art at the time the invention was made to combine the system above with the teaching of a mobile phone selecting an application for download as taught by Bell. The motivation for such a combination is use of a known technique in an analogous art to allow the user to select the appropriate device via the phone and thereby increase compatibility to existing devices.

With regard to Claim 42, " The device of claim 40, wherein the device downloads an application to function as a remote control for one or more devices including a

television". *Bell discloses that the device is configured to directly communicate with the TV as a remote (Figure 4 and Column 5 lines 60- column 6 lines 15)*

With regard to Claims 53 and 63, " The system of claims 36, wherein the server is collocated with a wireless carrier. *Bell discloses the server being collocated in the wireless network carrier (Figure 1)*

With regard to Claims 54 and 64 "The system of claims 36, wherein the server is collocated with a wireless hardware vendor. *Onedeck discloses that the seller of the device may customize/upgrade the device's software via a server (paragraphs 19-21)*

With regard to Claims 55 and 65, " The system of claims 36, wherein the server is collocated with an office network. *Onedeck discloses that the server may be collocated in an office network (paragraphs 19-21)*

With regard to Claims 57 and 72 The system of claims 39, wherein responsive to a request from the one or more wireless device to a website or URL associated with a website server or a network environment, the one or more wireless device receives an indicator of a software application to be downloaded from the remote server" *Bell discloses downloading application software via a URL or website link associated with a remote server for programming a device (Column 8 lines 60 through column 9 lines 10 see also Column 4 lines 25-35)*

With regard to Claim 40, " The system of claim 39, wherein the profiles contain information for both a user and the wireless device." *Ondeck discloses sending profile information including information identifying the user and the equipment (paragraphs 19, 25)*

With regards to Claims 48 and 70 "The system of claims 36, wherein the download of the software is based on a hierarchy of network paths. *Bell discloses downloading of said software based on a hierarchy of network paths (Column 4 lines 25-35 and Figure 3)*

5. Claims 43-36 are rejected under pre-AIA 35 U.S.C. 103(a) as being unpatentable over Onddeck and Bell in view of Minnett GB 2294563

With regard to Claim 43, " A system comprising a wireless device or mobile device including functions of one or more of a cellular telephone. PDA, handheld computer, or multifunction communication device or combinations thereof, the wireless device configured to receive a non-transitory computer readable medium from a server located at a remote location separate from the wireless device, the server confirmed to store a plurality of different application software or functional instructions for a plurality of wireless devices, one of the software application a non-transitory computer readable storage medium for a wireless device comprising:" *Ondeck discloses the software application is configured to control device hardware such as display, memory and processor to customize a PDA (paragraphs 20) wherein said software is associated with the user and device (paragraphs 19 and 25) and a server separate from the device (Figure 1 item 208 see also item 206) wherein that server stores customization of software (Figure 1, paragraph 32)*

" an application software to be run by a processor the wireless device" *Ondeck discloses the software application is configured to control device hardware such as display, memory and processor to customize a PDA (paragraphs 20)*

"Wherein the wireless device is in further communication with a television configured to receive wireless commands over a network wherein the wireless device is

configured to send a request the television, wherein the request comprises a control function for the television". *Ondeck does not explicitly disclose this.*

Bell discloses that the device is configured to directly communicate with the TV as a remote (Figure 4 and Column 5 lines 60- column 6 lines 15)

It would have been obvious to one of ordinary skill in the art at the time the invention was made to combine the system above with the teaching of a mobile phone selecting a channel as a remote as taught by Bell. The motivation for such a combination is use of a known technique in an analogous art to allow the user to change the channel of the television via a programmable remote and thus increasing compatibility to existing systems.

"wherein the wireless device is configured to send said commands using a local home IP network, and wherein the communication between the television made the wireless device is over a IP based network as part of a home network". *In an analogous art, Minett discloses sending commands from a remote to a TV via a wireless LAN connection of a home network (Page 1 lines 17-22) wherein said remote may be a PDA with phone capabilities (page 5 lines 10-20).*

It would have been obvious to one of ordinary skill in the art at the time the invention was made to combine the system above with the teaching of using WLAN connections. The motivation for such a combination is use of a known technique in an analogous art to substitute known protocols for wireless communications.

With regard to Claims 44, " The system of claim 43, wherein the wireless device is configured to communicate directly to the television. *Bell discloses that the device is configured to directly communicate with the TV as a remote (Figure 4 and Column 5 lines 60- column 6 lines 15)*

With regard to Claims 45 and 46, "The system of claim 43, wherein the wireless device is configured to communicate a set of commands over a network to a network switch box over a wireless local area network, and wherein the network switch box is configured to transmit said commands to a television. Bell disclose that said commands can be sent to a networked box that is communication with the TV or home entertainment center (*Figure 4 and Column 5 lines 60- column 6 lines 15)*

4. Claim 51 and 61 are rejected under 35 U.S.C. 103(a) as being unpatentable over Ondeck (US 2002/0046083) and Bell in further view of King (6,308,083)

With regard to Claims 51 and 61 "The system of claims 36, wherein the mobile device is configured to download an application for controlling a garage door opener. *Ondeck nor Bell do not explicitly disclose this.*

However, programmable garage door openers are well known in the art and shown by King in figure 1 and Column 2 lines 60-65.

It would have been obvious to one of ordinary skill in the art at the time the invention was made to combine the multi function programmable devices of Bell and

Ondeck with the teaching of programming a multifunction device to be a garage door opener as taught by King.The motivation for such a combination is use of known technique in an analogous art to increase capability of a multifunction device.

Claim 47,52, 62 and 69 are rejected under 35 U.S.C. 103(a) as being unpatentable over Ondeck (US 2002/0046083) and Bell in further view of Mattaway (US 6,131,121)

With regard to Claims 47,52, 62 and 69 "The system of claims 39, wherein the device is configured to function as an internet protocol IP phone". *Bell discloses function as a phone using WAP and other protocols but does not explicitly disclose an IP phone.*

However, using the phone with an alternative protocol such as internet protocol is well known in the art and shown by Mattaway (Figures 3 and 5 and appropriate text).

It would have been obvious to one of ordinary skill in the art at the time the invention was made to combine the system above with the teaching of using an IP protocol as taught by Mattaway. The motivation for such a combination is use of known alternative protocol.

Claim 49, 59 and 67 are rejected under 35 U.S.C. 103(a) as being unpatentable over Ondeck (US 2002/0046083) and Bell in further view of Engbersen (US 6,341,304)

With regards to Claims 49, 59 and 67 “The system of claims 36, wherein the device is configured to queue various software applications for downloading at a later time in response to the type of network bandwidth. Ondeck and bell do not explicitly disclose this.

However, queuing downloads for later when there is limited bandwidth is well known in the art and described in Engbersen (Figure 3 and appropriate text)

It would have been obvious to one of ordinary skill in the art at the time the invention was made to combine the system above with of saving downloads for later if bandwidth is limited or not available The motivation for such a combination is use of known technique in an analogous art to improve efficient use of bandwidth.

Claim 58, 68 and 71 are rejected under 35 U.S.C. 103(a) as being unpatentable over Ondeck (US 2002/0046083) and Bell in further view of Lee (US 8,670,405)

With regard to Claims 58, 68 and 71"The system of claims 57, wherein the downloading of said software is placed into an inactive download state when the device is connected to a first type of network, and wherein the wireless device is enabled with a configuration mode such that responsive to connecting to a second network type the mobile device downloads the software from the servers. *Neither Bell nor Ondeck explicitly disclose this.*

Lee discloses coupling multiple networks to a mobile PC and waiting or holding a download until a faster/cheaper connection takes place (Figure 12 and Column 3 lines 50 through Column 4 line 16).

It would have been obvious to one of ordinary skill in the art at the time the invention was made to combine the system above with the teaching of selecting a preferred network for QoS specific tasks. The motivation for such a combination is use of a known technique in an analogous art to decrease cost/time to the user for downloads.

Claim 58, 68 and 71 are rejected under 35 U.S.C. 103(a) as being unpatentable over Ondeck (US 2002/0046083) and Bell in further view of Kretschman (US 6,167464)

With regard to Claims 50 and 60 " The system of claims 36, wherein the device is configured with GPS for location sensing and uses location to determine when to

download a software application data and from which server to download the application. Ondeck and Bell do not explicitly disclose this.

Kretschmann discloses a mobile device that downloads an application from a specific server based on the location of the device using GPS signals (abstract , Column 3 line 8-10 Column 7 line12-30 see also Claim 14 item III).

It would have been obvious to one of ordinary skill in the art at the time the invention was made to combine the system above with the teaching of downloading application specific tasks based on location of the unit as disclosed by Kretschmann. The motivation for such a combination is use of a known technique in an analogous art to reuse the same device for location specific tasks.

Claim 56 and 66 are rejected under 35 U.S.C. 103(a) as being unpatentable over Ondeck (US 2002/0046083) and Bell in further view of Wood (US 6,453,127)

With regard to Claims 56 and 66, "The system of claims 39, wherein the wireless device downloads an application to control a copier.

However, programmable garage door openers are well known in the art and shown by Wood (abstract and Figure 3)

It would have been obvious to one of ordinary skill in the art at the time the invention was made to combine the multi function programmable devices of Bell and Ondeck with the teaching of programming a multifunction device to be a copier as

taught by Wood.The motivation for such a combination is use of known technique in an analogous art to increase capability of a multifunction device.

Pertinent Prior Art

Crookham (US 6,681,110) discloses remote control downloading based on location.

Conclusion

2. Applicant's amendment necessitated the new ground(s) of rejection presented in this Office action. Accordingly, **THIS ACTION IS MADE FINAL**. See MPEP § 706.07(a). Applicant is reminded of the extension of time policy as set forth in 37 CFR 1.136(a).

A shortened statutory period for reply to this final action is set to expire THREE MONTHS from the mailing date of this action. In the event a first reply is filed within TWO MONTHS of the mailing date of this final action and the advisory action is not mailed until after the end of the THREE-MONTH shortened statutory period, then the shortened statutory period will expire on the date the advisory action is mailed, and any extension fee pursuant to 37 CFR 1.136(a) will be calculated from the mailing date of

the advisory action. In no event, however, will the statutory period for reply expire later than SIX MONTHS from the date of this final action.

Any inquiry concerning this communication or earlier communications from the examiner should be directed to MICHAEL IRACE whose telephone number is (571)270-7273. The examiner can normally be reached on Monday through Friday 8:00am to 5:30pm.

If attempts to reach the examiner by telephone are unsuccessful, the examiner's supervisor, Patrick Edouard can be reached on (571)272-7603. The fax phone number for the organization where this application or proceeding is assigned is 571-273-8300.

Information regarding the status of an application may be obtained from the Patent Application Information Retrieval (PAIR) system. Status information for published applications may be obtained from either Private PAIR or Public PAIR. Status information for unpublished applications is available through Private PAIR only. For more information about the PAIR system, see http://pair-direct.uspto.gov. Should you have questions on access to the Private PAIR system, contact the Electronic Business Center (EBC) at 866-217-9197 (toll-free). If you would like assistance from a USPTO Customer Service Representative or access to the automated information system, call 800-786-9199 (IN USA OR CANADA) or 571-272-1000.

/MICHAEL IRACE/
Examiner, Art Unit 2644
/PATRICK EDOUARD/
Supervisory Patent Examiner, Art Unit 2644

Notice of References Cited	Application/Control No. 10/911,211	Applicant(s)/Patent Under Reexamination RAO ET AL.	
	Examiner MICHAEL IRACE	Art Unit 2644	Page 1 of 1

U.S. PATENT DOCUMENTS

*		Document Number Country Code-Number-Kind Code	Date MM-YYYY	Name	Classification
*	A	US-7,894,474	02-2011	Bell, John	370/466
*	B	US-6,308,083	10-2001	King, Joseph D.	455/556.1
*	C	US-6,453,127	09-2002	Wood et al.	399/8
*	D	US-6,167,464	12-2000	Kretschmann, Robert J.	710/15
*	E	US-6,341,304	01-2002	Engbersen et al.	709/203
*	F	US-8,670,405	03-2014	Lee et al.	370/331
	G	US-			
	H	US-			
	I	US-			
	J	US-			
	K	US-			
	L	US-			
	M	US-			

FOREIGN PATENT DOCUMENTS

*		Document Number Country Code-Number-Kind Code	Date MM-YYYY	Country	Name	Classification
	N					
	O					
	P					
	Q					
	R					
	S					
	T					

NON-PATENT DOCUMENTS

*		Include as applicable: Author, Title Date, Publisher, Edition or Volume, Pertinent Pages)
	U	GB 2294563 published 1/5/1196
	V	
	W	
	X	

*A copy of this reference is not being furnished with this Office action. (See MPEP § 707.05(a).)
Dates in MM-YYYY format are publication dates. Classifications may be US or foreign.

(12) UK Patent Application (19) GB (11) 2 294 563 (13) A

(43) Date of A Publication 01.05.1996

(21) Application No 9521391.4

(22) Date of Filing 18.10.1995

(30) Priority Data
(31) 9421840 (32) 28.10.1994 (33) GB

(71) Applicant(s)
Plessey Semiconductors Limited

(Incorporated in the United Kingdom)

Cheney Manor, SWINDON, Wiltshire, SN2 2QW, United Kingdom

(72) Inventor(s)
Peter John Minett

(74) Agent and/or Address for Service
Maurice Edward Casey
GEC Patent Department, Waterhouse Lane, CHELMSFORD, Essex, CM1 2QX, United Kingdom

(51) INT CL[6]
G06F 3/14 , H04N 5/445 7/22

(52) UK CL (Edition O)
G4A ASX
U1S S2206

(56) Documents Cited
GB 2162978 A GB 2131221 A EP 0416807 A2
WO 92/14397 A1 US 4626892 A US 4488179 A

(58) Field of Search
UK CL (Edition O) G4A AFGDC AFGDX AMP ASX , G4H HRCU HRE , H4F FAAX FBA FCW
INT CL[6] G06F 3/14 3/153 , H04N 5/445 7/22 9/64
On-line: WPI

(54) Television receiver with auxiliary data receiver

(57) A broadcast television receiver set comprises auxiliary receiver means 2 for receiving data signals over a non-wired transmission path, means 3 for processing data signals received over the transmission path and means 4 to display video information derived from the data signal processing means as images on the main display screen of the television set. The data signal processing means may decompress received compressed video data. The transmission lid may be infrared and may involve a modification of an existing IR remote-control receiver in the television set. The auxiliary receiver means may be adapted to receive data signals under a data-transmission protocol employed by a portable computer, e.g. a personal digital assistant 5 or a laptop/notebook. The television set may also comprise transmitting means 9, auxiliary processing means and data-storage means (e.g. a CD-ROM 11 and RAM 10) for establishing a two-way lid between the set and a portable computer and for providing extension processing and storage facilities for the computer.

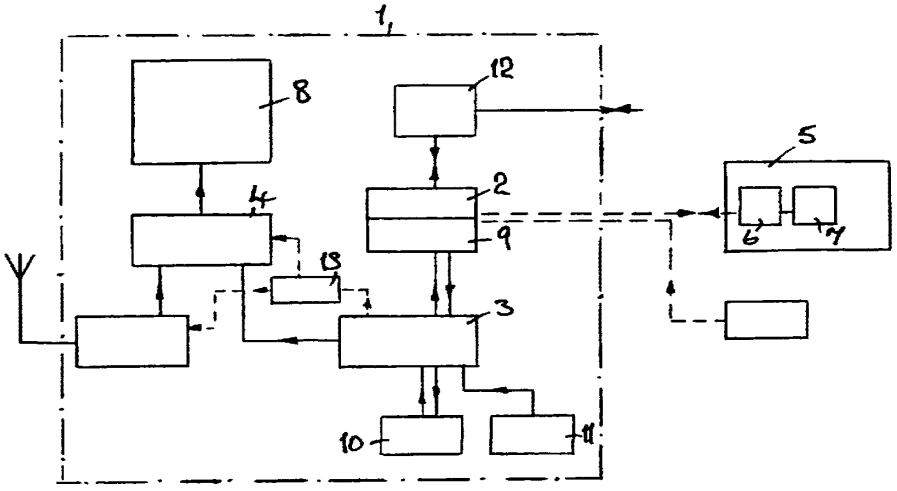

GB 2 294 563 A

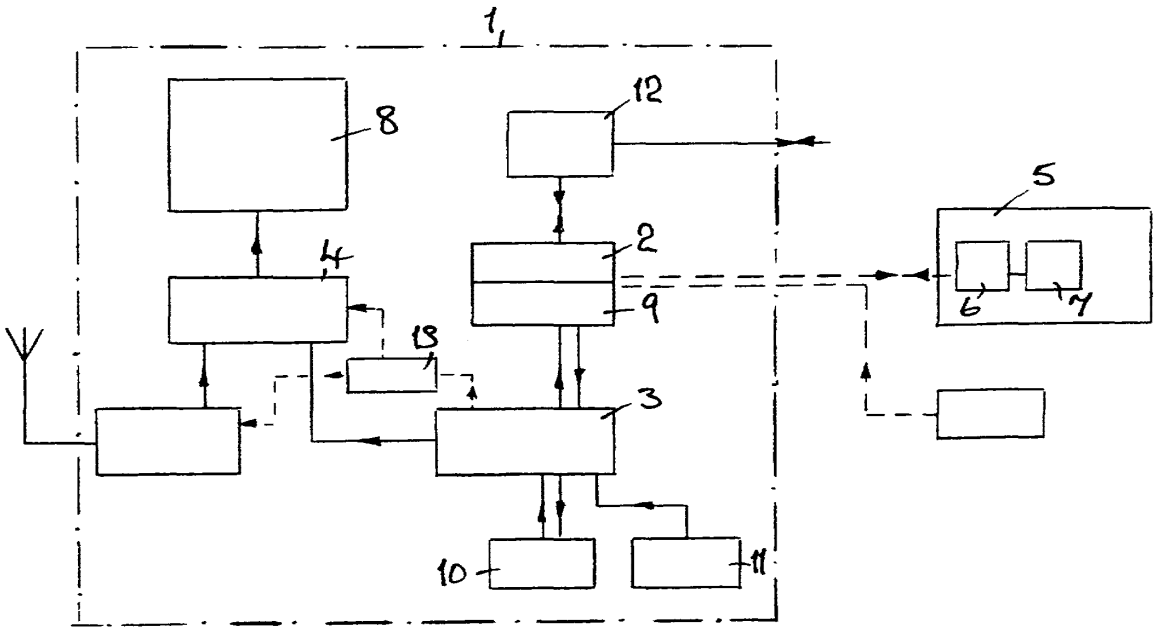
1
8
12
5
2
4
9
6
7
13
3
10
11

IMPROVEMENTS IN OR RELATING TO TELEVISION RECEIVERS

The invention concerns a television remote-control arrangement comprising a television set having a remote-control receiver and associated processing circuitry and a remote transmitter for transmitting date to the television set, the remote-control arrangement operating especially, but not exclusively, by infrared transmission.

Conventional remote-control arrangements employ remote transmitters which are handheld and dedicated to the task involved, namely the control of typical television functions such as channel selection, sound level and picture brightness. Also, the processing circuitry employed in the television set is dedicated to the decoding of such control signals. As such, the known remote-control arrangements are limited in what they can contribute to the functioning of a television set.

In accordance with the invention, there is provided a broadcast television receiver set comprising auxiliary receiver means for receiving data signals over a non-wired transmission path, data signal processing means for processing data signals received over the transmission path and means to display video information derived from the data signal processing means as images on the main display screen of the television set.

The data signal processing means may comprise circuitry for decompressing compressed video data received by the auxiliary receiver means.

The auxiliary receiver means may be arranged to receive data signals over an infrared link, a wireless LAN (local area network) link or an ultrasonic link. Where the link is infrared, the auxiliary receiver means may comprise a remote control receiver for the television set, the remote control receiver being arranged to pass data signals to the data signal processing means.

The auxiliary receiver means may be arranged to receive data signals according to a data-transmission protocol employed by a portable computer such as a personal digital assistant or a notebook or a laptop computer.

The broadcast television receiver set may comprise further auxiliary processing means and a transmitting means for transmitting data to the portable computer, the auxiliary receiver means and the transmitting means forming a two-way communication link with the portable computer and the auxiliary processing means being connectable to the data signal processing means and to the transmitting means such as to serve as a co-processor for the computer.

The television receiver set may comprise an auxiliary storage device connectable to the data signal processing means and to the transmitting means such as to serve as an extension data storage facility for the computer.

A read-only memory, which may take the form of a CD-ROM, may form part of the broadcast television receiver set, the read-only memory being connectable to the data signal processing means and/or to the transmitting means such as to serve as an extended source of programs for the computer.

Interfacing means may be provided in the television set for interfacing the data processing means and the transmitting means to a network or to a telephone system, whereby two-way transfer of data can be established between the portable computer and a user of the network or telephone system.

The broadcast television receiver set may comprise control means for controlling various functions such as channel selection, sound level control and teletext, the control

means being driven from the data signal processing means in response to control data transmitted by the portable computer.

The invention will now be described, by way of example, with reference to the accompanying drawing, which shows a broadcast television set schematically.

Referring to the drawing, a broadcast television receiver set 1 according to the invention comprises a auxiliary receiver means 2 in the form of an infrared receiver adapted to receive data according to the transmission protocol employed by a small portable computer. A preferred protocol is the Data Association Serial Infrared MAC and Link Protocol version 3.0 Dec 31993, as sponsored by the computer manufacturers IBM, Hewlett Packard and Apple. Also included in the television set 1 is a data signal processing means 3 which takes the data received by the auxiliary receiver 2, decompresses any video data received, decodes it and passes it on in decoded form to the main display circuitry 4 of the television set. The above protocol supports the short-range infrared transfer of data at a rate of approximately 100K bits per second, which is sufficient to transfer compressed video information from a portable computer to the television set.

The television set of the invention may be used in conjunction with a personal digital assistant (PDA) 5 which has an infrared transmitter 6 operating under the above protocol and a video data compressor 7. The compressor 7, on command from the PDA 5, takes the video data content of the small screen (not shown) of the PDA 5, compresses it and then transmits it by means of the transmitter 6 to the television set 1 at the maximum transfer rate of the system, namely 100K bits per second, as mentioned above. The television 1 thus acts essentially as a visual extension of the PDA 5 in order to provide a more easily viewable display of the PDA's visual data. There is the added bonus that the

television display means 8 can be a colour display, in contrast to the normal monochrome display of a PDA 5.

In addition to the auxiliary infrared receiver 2 and the data signal processing means 3, the broadcast television set 1 includes an infrared transmitter 9 corresponding to that of the PDA 5, i.e. the transmitter 9 operates under the same protocol as the PDA transmitter 6 and the television auxiliary receiving means 2. Further to this, the television set 1 is also equipped with a storage device 10 in the form of additional RAM and an auxiliary microprocessor (not shown). The additional RAM is arranged to be accessable by the data signal processing means 3 and to be readable into the transmitter 9 incorporated into the television set 1. Interfacing between the RAM and the transmitter 9 is selectably by way of the data signal processing means 3 or the additional microprocessor. With these additional elements it is possible for two-way communication to take place between the PDA 5 and the television set 1, the RAM acting as an extension hard disk for the PDA 5 and the microprocessor performing the function of a co-processor, relieving the burden on the PDA processor circuity itself and enabling the PDA 5 to perform above its natural capacity.

In this way, the television set 1 acts also as a processing and storage extension of the PDA 5.

In a preferred embodiment of the invention, the television set 1 also includes a CD-ROM (read-only memory) 11 containing a suite of programs for use by the PDA 5. The PDA 5 is able to access the CD-ROM 11 by means of the infrared link and the data signal processing means 3, the program data on the CD-ROM 11 being either processed in the

data signal processing means 3 itself or in the auxiliary microprocessor, or transferred to the PDA 5 for processing, via the television's infrared transmitter 9.

The preferred embodiment also includes interfacing links 12 between the television set and a public network or a telephone system. The two-way communication that exists between the PDA 5 and the television set 1 can now take place between the PDA 5 and other users on the network/telephone system. The PDA 5 thus acts as a data terminal such that messages can be transmitted to other users in the system by keying or writing into the PDA 5 the message to be transmitted and then issuing the command to transmit the message to the television set 1 where it is relayed onto the network or television system. In the case of a connection with the telephone system, the PDA 5 can act as a telephone, provided it has a sound card and a small speaker (not shown) capable of reproducing received audio messages.

In addition, the preferred embodiment comprises an auxiliary control means 13 which is fed from the data signal processing means 3 and effects control of more standard TV functions such as channel selection, sound level control, teletext, etc. Even a video recorder (not shown) could be controlled from the PDA 5 if the recorder were linked to the television set 1.

In place of a PDA 5 a laptop or notebook computer can be employed for the remote-control arrangement of the invention, or indeed any computer provided with a wireless data communication facility.

The invention can be used to advantage with a games computer by incorporating into the latter a remote-control transmitter operating under a protocol similar to that mentioned above in connection with the PDA 5. In this case, the large colour display that

would be obtained on the television set 1 would enable the often tiny characters that are seen on games computers' screens to be clearly identified.

While the invention has been described in terms of infrared communication between the television set 1 and the computer device, other media are equally applicable, e.g. radio, visible light, ultrasonics.

CLAIMS

1. A broadcast television receiver set comprising auxiliary receiver means for receiving data signals over a non-wired transmission path, data signal processing means for processing data signals received over the transmission path and means to display video information derived from the data signal processing means as images on the main display screen of the television set.

2. A broadcast television receiver set as claimed in Claim 1, in which the data signal processing means comprises circuitry for decompressing compressed video data received by the auxiliary receiver means.

3. A broadcast television receiver set as claimed in Claim 1 or Claim 2, in which the auxiliary receiver means is arranged to receive data signals over an infrared link.

4. A broadcast television receiver set as claimed in Claim 3, in which the auxiliary receiver means comprises a remote control receiver for the television set, the remote control receiver being arranged to pass data signals to the data signal processing means.

5. A broadcast television receiver set as claimed in Claim 1 or Claim 2, in which the auxiliary receiver means is arranged to receive data signals over a wireless local area network link.

6. A broadcast television receiver set as claimed in Claim 1 or Claim 2, in which the auxiliary receiver means is arranged to receive data signals over an ultrasonic link.

7. A broadcast television receiver set as claimed in any one of the preceding claims, in which the auxiliary receiver means is arranged to receive data signals according

to a data-transmission protocol employed by a portable computer such as a personal digital assistant or a notebook or a laptop computer.

8. A broadcast television receiver set as claimed in Claim 7, comprising further auxiliary processing means and a transmitting means for transmitting data to the portable computer, the auxiliary receiver means and the transmitting means forming a two-way communication link with the portable computer and the auxiliary processing means being connectable to the data signal processing means and to the transmitting means such as to serve as a co-processor for the computer.

9. A broadcast television receiver set as claimed in Claim 8, comprising an auxiliary storage device connectable to the data signal processing means and to the transmitting means such as to serve as an extension data storage facility for the computer.

10. A broadcast television receiver set as claimed in Claim 8 or Claim 9, comprising a read-only memory connectable to the data signal processing means and/or to the transmitting means such as to serve as an extended source of programs for the computer.

11. A broadcast television receiver set as claimed in Claim 10, in which the read-only memory is a CD-ROM.

12. A broadcast television receiver set as claimed in any one of Claims 8 to 11, comprising interfacing means for interfacing the data processing means and the transmitting means to a network or to a telephone system, whereby two-way transfer of data can be established between the portable computer and a user of the network or telephone system.

13. A broadcast television receiver set as claimed in any one of Claims 7 to 12, comprising control means for controlling various functions such as channel selection, sound level control and teletext, the control means being driven from the data signal processing means in response to control data transmitted by the portable computer.

14. A television set substantially as hereinbefore described.

The Patent Office

10

Application No: GB 9521391.4 **Examiner:** B.G.Western
Claims searched: 1-14 **Date of search:** 24 January 1996

Patents Act 1977
Search Report under Section 17

Databases searched:

UK Patent Office collections, including GB, EP, WO & US patent specifications, in:

UK Cl (Ed.O): G4A AFGDC AFGDX AMP ASX; G4H HRCU HRE; H4F FAAX FBA FCW

Int Cl (Ed.6): G06F 3/14 3/153; H04N 5/445 5/45 7/22 9/64

Other: On-line: WPI

Documents considered to be relevant:

Category	Identity of document and relevant passage			Relevant to claims
X	GB-2162978-A	THORN EMI	See whole document	1,3,4
X	GB-2131221-A	AI ESU ESU	See whole document	1,3 to 7
X	EP-0416807-A2	IBM	See whole document	1,3,7
X	WO-92/14397-A1	HAUCK	See Fig, pp 6-7	1,3,4,6,7
X	US-4488179-A	ECKHARD KRUGER et al	See whole document	1,4,5
X	US-4626892-A	NORTRUP et al	See whole document	1,3,4

X	Document indicating lack of novelty or inventive step	A	Document indicating technological background and/or state of the art.
Y	Document indicating lack of inventive step if combined with one or more other documents of same category.	P	Document published on or after the declared priority date but before the filing date of this invention.
&	Member of the same patent family	E	Patent document published on or after, but with priority date earlier than, the filing date of this application.

EAST Search History

EAST Search History (Prior Art)

Ref #	Hits	Search Query	DBs	Default Operator	Plurals	Time Stamp
L1	0	"10911211" and (IP)	US-PGPUB; USPAT; USOCR; FPRS; EPO; JPO; DERWENT; IBM_TDB	AND	OFF	2014/05/02 21:31
L2	2	"09189535"	US-PGPUB; USPAT; USOCR; FPRS; EPO; JPO; DERWENT; IBM_TDB	AND	OFF	2014/05/02 22:15
L3	30	upgrading near synergetic near2 home near2 networks	US-PGPUB; USPAT; USOCR; FPRS; EPO; JPO; DERWENT; IBM_TDB	AND	OFF	2014/05/02 22:16
L4	6	upgrading near synergetic near2 home near2 networks and office	US-PGPUB; USPAT; USOCR; FPRS; EPO; JPO; DERWENT; IBM_TDB	AND	OFF	2014/05/02 22:17
L5	21	"6937972"	US-PGPUB; USPAT; USOCR; FPRS; EPO; JPO; DERWENT; IBM_TDB	AND	OFF	2014/05/02 22:57
L6	2	"6937972" and ip	US-PGPUB; USPAT; USOCR; FPRS; EPO; JPO; DERWENT; IBM_TDB	AND	OFF	2014/05/02 22:57
L7	6	"6937972" and protocol	US-PGPUB; USPAT; USOCR; FPRS; EPO; JPO; DERWENT; IBM_TDB	AND	OFF	2014/05/02 22:58
L8	0	"10911211" and (internet protocol)	US-PGPUB;	AND	OFF	2014/05/02

			USPAT; USOCR; FPRS; EPO; JPO; DERWENT; IBM_TDB			22:59
L9	0	"10911211" and (protocol)	US-PGPUB; USPAT; USOCR; FPRS; EPO; JPO; DERWENT; IBM_TDB	AND	OFF	2014/05/02 22:59
L10	0	"10911211" and (wlan)	US-PGPUB; USPAT; USOCR; FPRS; EPO; JPO; DERWENT; IBM_TDB	AND	OFF	2014/05/02 22:59
L11	0	"10911211" and (lan)	US-PGPUB; USPAT; USOCR; FPRS; EPO; JPO; DERWENT; IBM_TDB	AND	OFF	2014/05/02 22:59
L12	0	"10911211" and (wireless)	US-PGPUB; USPAT; USOCR; FPRS; EPO; JPO; DERWENT; IBM_TDB	AND	OFF	2014/05/02 22:59
L13	0	"10911211"	US-PGPUB; USPAT; USOCR; FPRS; EPO; JPO; DERWENT; IBM_TDB	AND	OFF	2014/05/02 22:59
L14	0	"10911211"	US-PGPUB; USPAT; USOCR; FPRS; EPO; JPO; DERWENT; IBM_TDB	AND	OFF	2014/05/02 22:59
L15	10	"09591381" and ip	US-PGPUB; USPAT; USOCR; FPRS; EPO; JPO; DERWENT; IBM_TDB	AND	OFF	2014/05/02 23:00
L16	21	remote with (television or tv) with IP and @ad<"20000609"	US-PGPUB; USPAT; USOCR; FPRS; EPO; JPO; DERWENT;	AND	OFF	2014/05/02 23:00

			IBM_TDB			
L17	1	remote with (television or tv) with WLAN and @ad<"20000609"	US-PGPUB; USPAT; USOCR; FPRS; EPO; JPO; DERWENT; IBM_TDB	AND	OFF	2014/05/02 23:02
L18	1	remote same (television or tv) with WLAN and @ad<"20000609"	US-PGPUB; USPAT; USOCR; FPRS; EPO; JPO; DERWENT; IBM_TDB	AND	OFF	2014/05/02 23:03
L19	32	remote same (television or tv) with (WLAN or wireless lan) and @ad<"20000609"	US-PGPUB; USPAT; USOCR; FPRS; EPO; JPO; DERWENT; IBM_TDB	AND	OFF	2014/05/02 23:03
S1	4	"20070142050"	US-PGPUB; USPAT; FPRS; EPO; JPO; DERWENT; IBM_TDB	AND	OFF	2014/04/30 01:44
S2	18	"1838120"	US-PGPUB; USPAT; FPRS; EPO; JPO; DERWENT; IBM_TDB	AND	OFF	2014/04/30 01:46
S3	133	(track$4 or rail or railway) with (velocity or speed) and RNC	US-PGPUB; USPAT; FPRS; EPO; JPO; DERWENT; IBM_TDB	AND	OFF	2014/04/30 02:12
S4	4	"12269579"	US-PGPUB; USPAT; FPRS; EPO; JPO; DERWENT; IBM_TDB	AND	OFF	2014/04/30 02:12
S5	2	"12259579"	US-PGPUB; USPAT; FPRS; EPO; JPO; DERWENT; IBM_TDB	AND	OFF	2014/04/30 02:13
S6	71	(track$4 or rail or railway) with (velocity or speed) and RNC and @ad<"20080505"	US-PGPUB; USPAT; FPRS; EPO; JPO; DERWENT; IBM_TDB	AND	OFF	2014/04/30 02:13
S7	29	(track$4 or rail or railway) with (velocity or speed) and RNC same2	US-PGPUB; USPAT;	AND	OFF	2014/04/30 02:16

		(handoff or hand near1 off or handover or hand near1 over) and @ad<"20080505"	FPRS; EPO; JPO; DERWENT; IBM_TDB			
S8	40	(track$4 or rail or railway) same(velocity or speed) and RNC same2 (handoff or hand near1 off or handover or hand near1 over) and @ad<"20080505"	US-PGPUB; USPAT; FPRS; EPO; JPO; DERWENT; IBM_TDB	AND	OFF	2014/04/30 03:05
S9	4	"20040203779"	US-PGPUB; USPAT; FPRS; EPO; JPO; DERWENT; IBM_TDB	AND	OFF	2014/04/30 03:07
S10	5	"20030050064"	US-PGPUB; USPAT; FPRS; EPO; JPO; DERWENT; IBM_TDB	AND	OFF	2014/04/30 03:08
S11	33	"5970408"	US-PGPUB; USPAT; FPRS; EPO; JPO; DERWENT; IBM_TDB	AND	OFF	2014/04/30 03:09
S12	136	(track$4 or rail or railway) same(velocity or speed) and (RNC or MSC) same2 (handoff or hand near1 off or handover or hand near1 over) and @ad<"20080505"	US-PGPUB; USPAT; FPRS; EPO; JPO; DERWENT; IBM_TDB	AND	OFF	2014/04/30 18:22
S13	3	"20050272431"	US-PGPUB; USPAT; FPRS; EPO; JPO; DERWENT; IBM_TDB	AND	OFF	2014/04/30 18:32
S14	18	"1838120"	US-PGPUB; USPAT; FPRS; EPO; JPO; DERWENT; IBM_TDB	AND	OFF	2014/04/30 23:28
S15	64	"6125278"	US-PGPUB; USPAT; FPRS; EPO; JPO; DERWENT; IBM_TDB	AND	OFF	2014/04/30 23:34
S16	4	"20040203779"	US-PGPUB; USPAT; FPRS; EPO; JPO; DERWENT; IBM_TDB	AND	OFF	2014/04/30 23:34
S17	584	reserv$4 with (path or route or rail or railway) with (speed or velocity) and	US-PGPUB; USPAT;	AND	OFF	2014/04/30 23:36

		@ad<"20080505"	FPRS; EPO; JPO; DERWENT; IBM_TDB			
S18	1	reserv$4 with (path or route or rail or railway) with (speed or velocity) and (RNC or MSC) and @ad<"20080505"	US-PGPUB; USPAT; FPRS; EPO; JPO; DERWENT; IBM_TDB	AND	OFF	2014/04/30 23:36
S19	1	reserv$4 with (path or route or rail or railway) with (speed or velocity) and (RNC$4 or MSC$4 or BTS) and @ad<"20080505"	US-PGPUB; USPAT; FPRS; EPO; JPO; DERWENT; IBM_TDB	AND	OFF	2014/04/30 23:37
S20	7	(reserv$4 or allocat$4) sa,e (path or route or rail or railway) with (speed or velocity) and (RNC$4 or MSC$4 or BTS) and @ad<"20080505"	US-PGPUB; USPAT; FPRS; EPO; JPO; DERWENT; IBM_TDB	AND	OFF	2014/04/30 23:37
S21	52	(reserv$4 or allocat$4) same (path or route or rail or railway) with (speed or velocity) and (RNC$4 or MSC$4 or BTS) and @ad<"20080505"	US-PGPUB; USPAT; FPRS; EPO; JPO; DERWENT; IBM_TDB	AND	OFF	2014/04/30 23:37
S22	572	(reserv$4 or allocat$4) same (path or route or rail or railway) with (speed or velocity) and (RNC$4 or MSC$4 or BTS or BSC or controller) and @ad<"20080505"	US-PGPUB; USPAT; FPRS; EPO; JPO; DERWENT; IBM_TDB	AND	OFF	2014/04/30 23:40
S23	31	(reserv$4 or allocat$4) same (path or route or rail or railway) with (speed or velocity) and (RNC$4 or MSC$4 or BTS or BSC or controller) same (handover or hand near1 over or handoff or hand near1 off)and @ad<"20080505"	US-PGPUB; USPAT; FPRS; EPO; JPO; DERWENT; IBM_TDB	AND	OFF	2014/04/30 23:40
S24	370	(path or route or rail or railway) with (speed or velocity) and (RNC$4 or MSC$4 or BTS or BSC or controller) same (handover or hand near1 over or handoff or hand near1 off)and @ad<"20080505"	US-PGPUB; USPAT; FPRS; EPO; JPO; DERWENT; IBM_TDB	AND	OFF	2014/04/30 23:44
S25	358	(train or vehicle or highway or rail or railway) with (speed or velocity or direction) same (handover or hand near1 over or handoff or hand near1 off)and @ad<"20080505"	US-PGPUB; USPAT; FPRS; EPO; JPO; DERWENT; IBM_TDB	AND	OFF	2014/04/30 23:57
S26	19	"2005020203"	US-PGPUB; USPAT; FPRS; EPO; JPO; DERWENT; IBM_TDB	AND	OFF	2014/05/01 00:04
S27	8	"20050020203"	US-PGPUB; USPAT;	AND	OFF	2014/05/01 00:04

			FPRS; EPO; JPO; DERWENT; IBM_TDB			
S28	38	"6311065"	US-PGPUB; USPAT; FPRS; EPO; JPO; DERWENT; IBM_TDB	AND	OFF	2014/05/01 00:05
S29	2914	"20030427"	US-PGPUB; USPAT; FPRS; EPO; JPO; DERWENT; IBM_TDB	AND	OFF	2014/05/01 00:24
S30	207	FI "20030427"	US-PGPUB; USPAT; FPRS; EPO; JPO; DERWENT; IBM_TDB	AND	OFF	2014/05/01 00:25
S31	15	"20030086"	US-PGPUB; USPAT; FPRS; EPO; JPO; DERWENT; IBM_TDB	AND	OFF	2014/05/01 00:28
S32	11	("2003/0235165").URPN.	USPAT	AND	OFF	2014/05/01 03:34
S33	0	"200902199900"	USPAT	AND	OFF	2014/05/01 03:39
S34	1	"20090219900"	USPAT	AND	OFF	2014/05/01 03:39
S35	3	"20090219900"	US-PGPUB; USPAT; USOCR; FPRS; EPO; JPO; DERWENT; IBM_TDB	AND	OFF	2014/05/01 03:39
S36	0	multi near1 function same remote with programable and (Garage and (tv or television))	US-PGPUB; USPAT; USOCR; FPRS; EPO; JPO; DERWENT; IBM_TDB	AND	OFF	2014/05/01 21:04
S37	0	multi near1 function same remote with programmable and (Garage and (tv or television))	US-PGPUB; USPAT; USOCR; FPRS; EPO; JPO; DERWENT; IBM_TDB	AND	OFF	2014/05/01 21:04
S38	1	multi near1 function same remote with program$6 and (Garage and (tv or television))	US-PGPUB; USPAT; USOCR; FPRS; EPO; JPO;	AND	OFF	2014/05/01 21:04

			DERWENT; IBM_TDB			
S39	2	multi near1 function same remote with program$6 and (Garage)	US-PGPUB; USPAT; USOCR; FPRS; EPO; JPO; DERWENT; IBM_TDB	AND	OFF	2014/05/01 21:05
S40	6	"20020046083"	US-PGPUB; USPAT; USOCR; FPRS; EPO; JPO; DERWENT; IBM_TDB	AND	OFF	2014/05/01 21:10
S41	928	download$4 same (tv or television) with remot$4 same2 (cellular or telephone or phone)	US-PGPUB; USPAT; USOCR; FPRS; EPO; JPO; DERWENT; IBM_TDB	AND	OFF	2014/05/01 21:15
S42	0	"10911211"	US-PGPUB; USPAT; USOCR; FPRS; EPO; JPO; DERWENT; IBM_TDB	AND	OFF	2014/05/01 21:16
S43	97	download$4 same (tv or television) with remot$4 same2 (cellular or telephone or phone) and @ad<"20000609"	US-PGPUB; USPAT; USOCR; FPRS; EPO; JPO; DERWENT; IBM_TDB	AND	OFF	2014/05/01 21:21
S44	26	download$4 same (tv or television) with remot$4 same2 (cellular or phone) and @ad<"20000609"	US-PGPUB; USPAT; USOCR; FPRS; EPO; JPO; DERWENT; IBM_TDB	AND	OFF	2014/05/01 21:28
S45	0	download$4 same (tv or television) with remot$4 same2 (cellular or phone) and @ad<"20000609" and (garage or copier)	US-PGPUB; USPAT; USOCR; FPRS; EPO; JPO; DERWENT; IBM_TDB	AND	OFF	2014/05/01 21:55
S46	41	download$4 same (tv or television) with remot$4 same2 (cellular or phone or voice) and @ad<"20000609"	US-PGPUB; USPAT; USOCR; FPRS; EPO; JPO; DERWENT; IBM_TDB	AND	OFF	2014/05/01 21:55
S47	24	"6628964"	US-PGPUB; USPAT; USOCR;	AND	OFF	2014/05/01 21:59

			FPRS; EPO; JPO; DERWENT; IBM_TDB			
S48	0	"6628964" and @ad<"2000609"	US-PGPUB; USPAT; USOCR; FPRS; EPO; JPO; DERWENT; IBM_TDB	AND	OFF	2014/05/01 22:00
S49	2	"6628964" and @ad<"20000609"	US-PGPUB; USPAT; USOCR; FPRS; EPO; JPO; DERWENT; IBM_TDB	AND	OFF	2014/05/01 22:01
S50	24	"6628964"	US-PGPUB; USPAT; USOCR; FPRS; EPO; JPO; DERWENT; IBM_TDB	AND	OFF	2014/05/01 22:02
S51	10	"09591381"	US-PGPUB; USPAT; USOCR; FPRS; EPO; JPO; DERWENT; IBM_TDB	AND	OFF	2014/05/01 22:04
S52	10	"09591381" and garage	US-PGPUB; USPAT; USOCR; FPRS; EPO; JPO; DERWENT; IBM_TDB	AND	OFF	2014/05/01 22:05
S53	0	"09591381" and copier	US-PGPUB; USPAT; USOCR; FPRS; EPO; JPO; DERWENT; IBM_TDB	AND	OFF	2014/05/01 22:05
S54	0	"09591381" and printer	US-PGPUB; USPAT; USOCR; FPRS; EPO; JPO; DERWENT; IBM_TDB	AND	OFF	2014/05/01 22:06
S55	0	"09591381" and copy	US-PGPUB; USPAT; USOCR; FPRS; EPO; JPO; DERWENT; IBM_TDB	AND	OFF	2014/05/01 22:06
S56	0	"10911211" and copier	US-PGPUB;	AND	OFF	2014/05/01

			USPAT; USOCR; FPRS; EPO; JPO; DERWENT; IBM_TDB			22:12
S57	0	"10911211" and hierarch$4	US-PGPUB; USPAT; USOCR; FPRS; EPO; JPO; DERWENT; IBM_TDB	AND	OFF	2014/05/01 22:21
S58	0	"10911211" and (later or wait)	US-PGPUB; USPAT; USOCR; FPRS; EPO; JPO; DERWENT; IBM_TDB	AND	OFF	2014/05/01 22:23
S59	0	"10911211" and (bandwidth)	US-PGPUB; USPAT; USOCR; FPRS; EPO; JPO; DERWENT; IBM_TDB	AND	OFF	2014/05/01 22:24
S60	10	"09591381"	US-PGPUB; USPAT; USOCR; FPRS; EPO; JPO; DERWENT; IBM_TDB	AND	OFF	2014/05/01 22:24
S61	5	"09311928"	US-PGPUB; USPAT; USOCR; FPRS; EPO; JPO; DERWENT; IBM_TDB	AND	OFF	2014/05/02 00:34
S62	3	"09311128"	US-PGPUB; USPAT; USOCR; FPRS; EPO; JPO; DERWENT; IBM_TDB	AND	OFF	2014/05/02 00:35
S63	7	"09165682"	US-PGPUB; USPAT; USOCR; FPRS; EPO; JPO; DERWENT; IBM_TDB	AND	OFF	2014/05/02 02:16
S64	2	"09189535"	US-PGPUB; USPAT; USOCR; FPRS; EPO; JPO; DERWENT;	AND	OFF	2014/05/02 02:16

			IBM_TDB			
S65	51	programmable with (Cell$4) and remote same (tv or television or garage) and @ad<"20000609"	US-PGPUB; USPAT; USOCR; FPRS; EPO; JPO; DERWENT; IBM_TDB	AND	OFF	2014/05/02 02:18
S66	21	"6937972"	US-PGPUB; USPAT; USOCR; FPRS; EPO; JPO; DERWENT; IBM_TDB	AND	OFF	2014/05/02 02:42
S67	69	programmable with (Cell$4 or phone) and remote same (tv or television or garage) and @ad<"20000609"	US-PGPUB; USPAT; USOCR; FPRS; EPO; JPO; DERWENT; IBM_TDB	AND	OFF	2014/05/02 02:44
S68	72	("6308083").URPN.	USPAT	AND	OFF	2014/05/02 02:45
S69	18	remote near1 control with (Cell$4 or phone) same download$4 and (copier or tv or television or garage) and @ad<"20000609"	US-PGPUB; USPAT; USOCR; FPRS; EPO; JPO; DERWENT; IBM_TDB	AND	OFF	2014/05/02 02:53
S70	50	remote near1 control with (Cell$4 or phone) and download$4 and (copier or tv or television or garage) and @ad<"20000609"	US-PGPUB; USPAT; USOCR; FPRS; EPO; JPO; DERWENT; IBM_TDB	AND	OFF	2014/05/02 03:09
S72	3	programmable near1 (device or wireless or mobile) same (Cell$4 or phone) and download$4 and (copier or tv or television or garage) and @ad<"20000609"	US-PGPUB; USPAT; USOCR; FPRS; EPO; JPO; DERWENT; IBM_TDB	AND	OFF	2014/05/02 03:23
S73	10	(pronto) and download$4 and (copier or tv or television or garage) and @ad<"20000609"	US-PGPUB; USPAT; USOCR; FPRS; EPO; JPO; DERWENT; IBM_TDB	AND	OFF	2014/05/02 03:24
S74	7	(pronto) and download$4 and (cellular) and @ad<"20000609"	US-PGPUB; USPAT; USOCR; FPRS; EPO; JPO; DERWENT; IBM_TDB	AND	OFF	2014/05/02 03:25
S75	285	programmable near4 (cellular) and	US-PGPUB;	AND	OFF	2014/05/02

		@ad<"20000609"	USPAT; USOCR; FPRS; EPO; JPO; DERWENT; IBM_TDB			03:26
S76	77	programmable near4 (cellular) and (download$4) and @ad<"20000609"	US-PGPUB; USPAT; USOCR; FPRS; EPO; JPO; DERWENT; IBM_TDB	AND	OFF	2014/05/02 03:26
S77	20	programmable near4 (cellular or wireless near3 phone) and (download$4) and (TV or television or garage) and @ad<"20000609"	US-PGPUB; USPAT; USOCR; FPRS; EPO; JPO; DERWENT; IBM_TDB	AND	OFF	2014/05/02 03:29
S78	7	multi near1 function same (cellular or wireless near3 phone) and (download$4) and (TV or television or garage) and @ad<"20000609"	US-PGPUB; USPAT; USOCR; FPRS; EPO; JPO; DERWENT; IBM_TDB	AND	OFF	2014/05/02 03:33
S79	3	multi near1 function with remote and (cellular or wireless near3 phone) and (TV or television or garage) and @ad<"20000609"	US-PGPUB; USPAT; USOCR; FPRS; EPO; JPO; DERWENT; IBM_TDB	AND	OFF	2014/05/02 03:35
S80	10	multi near1 function with remote and (cellular or phone) and (TV or television or garage) and @ad<"20000609"	US-PGPUB; USPAT; USOCR; FPRS; EPO; JPO; DERWENT; IBM_TDB	AND	OFF	2014/05/02 03:37
S81	200	multi near1 function and (cellular or phone) and (TV or television or garage) and @ad<"20000609"	US-PGPUB; USPAT; USOCR; FPRS; EPO; JPO; DERWENT; IBM_TDB	AND	OFF	2014/05/02 03:40
S82	92	download$4 with function and (cellular or phone) same (TV or television or garage) and @ad<"20000609"	US-PGPUB; USPAT; USOCR; FPRS; EPO; JPO; DERWENT; IBM_TDB	AND	OFF	2014/05/02 03:49
S83	678	("5410326").URPN.	USPAT	AND	OFF	2014/05/02 03:52
S84	0	remote control same (cell$4 phone) and @ad<"2000609"	USPAT	AND	OFF	2014/05/02 03:57
S85	1578	remote control same (cell$4 phone)	USPAT	AND	OFF	2014/05/02

		and @ad<"20000609"				03:57
S88	80	"6308083"	US-PGPUB; USPAT; FPRS; EPO; JPO; DERWENT; IBM_TDB	AND	OFF	2014/05/02 18:23
S89	29	"6308083" and download$4	US-PGPUB; USPAT; FPRS; EPO; JPO; DERWENT; IBM_TDB	AND	OFF	2014/05/02 18:30
S90	80	"6308083"	US-PGPUB; USPAT; FPRS; EPO; JPO; DERWENT; IBM_TDB	AND	OFF	2014/05/02 18:31
S91	44	"6308083" and (cellular or phone)	US-PGPUB; USPAT; FPRS; EPO; JPO; DERWENT; IBM_TDB	AND	OFF	2014/05/02 18:35
S92	19	"6308083" and (cellular or phone) and (download$4)	US-PGPUB; USPAT; FPRS; EPO; JPO; DERWENT; IBM_TDB	AND	OFF	2014/05/02 18:38
S93	5	("7424291").URPN.	USPAT	AND	OFF	2014/05/02 18:39
S94	0	(universal or control) near2 remote and (cellular or phone) same (download$4) and @ad<"2000609"	US-PGPUB; USPAT; FPRS; EPO; JPO; DERWENT; IBM_TDB	AND	OFF	2014/05/02 18:41
S95	395	(universal or control) near2 remote and (cellular or phone) same (download$4) and @ad<"20000609"	US-PGPUB; USPAT; FPRS; EPO; JPO; DERWENT; IBM_TDB	AND	OFF	2014/05/02 18:41
S96	0	(universal or control) near2 remote same (donwload$4) and (cellular or phone) same (download$4) and @ad<"20000609"	US-PGPUB; USPAT; FPRS; EPO; JPO; DERWENT; IBM_TDB	AND	OFF	2014/05/02 18:48
S97	0	(universal or control) near2 remote same (donwload$4) and (cellular or phone) and @ad<"20000609"	US-PGPUB; USPAT; FPRS; EPO; JPO; DERWENT; IBM_TDB	AND	OFF	2014/05/02 18:49
S98	194	(universal or control) near2 remote same (download$4) and (cellular or phone) and @ad<"20000609"	US-PGPUB; USPAT; FPRS; EPO;	AND	OFF	2014/05/02 18:49

			JPO; DERWENT; IBM_TDB			
S99	96	(universal or control) near2 remote same (download$4) and (cellular or phone) same download$4 and @ad<"20000609"	US-PGPUB; USPAT; FPRS; EPO; JPO; DERWENT; IBM_TDB	AND	OFF	2014/05/02 18:49
S100	3	"09311128"	US-PGPUB; USPAT; FPRS; EPO; JPO; DERWENT; IBM_TDB	AND	OFF	2014/05/02 18:57
S101	0	"093111128"	US-PGPUB; USPAT; FPRS; EPO; JPO; DERWENT; IBM_TDB	AND	OFF	2014/05/02 18:58
S102	32	(universal or control) near2 remote same (download$4) and (cellular or phone) same download$4 and @ad<"20000609" and "128"	US-PGPUB; USPAT; FPRS; EPO; JPO; DERWENT; IBM_TDB	AND	OFF	2014/05/02 18:58
S103	1	(universal or control) near2 remote same (download$4) and (cellular or phone) same download$4 and @ad<"20000609" and "1128"	US-PGPUB; USPAT; FPRS; EPO; JPO; DERWENT; IBM_TDB	AND	OFF	2014/05/02 18:58
S104	58	(universal or control) near2 remote same (download$4) and (cellular or phone) same (talk or voice or chat) and @ad<"20000609"	US-PGPUB; USPAT; FPRS; EPO; JPO; DERWENT; IBM_TDB	AND	OFF	2014/05/02 18:59

EAST Search History (Interference)

<This search history is empty>

5/2/2014 11:19:32 PM

Index of Claims	Application/Control No.	Applicant(s)/Patent Under Reexamination
	10911211	RAO ET AL.
	Examiner	Art Unit
	DAVID WANG	2617

✓	Rejected	-	Cancelled	N	Non-Elected	A	Appeal
=	Allowed	÷	Restricted	I	Interference	O	Objected

☐ Claims renumbered in the same order as presented by applicant ☐ CPA ☐ T.D. ☐ R.1.47

CLAIM		DATE								
Final	Original	03/14/2008	12/09/2010	09/21/2011	06/12/2013	05/03/2014				
	1	-	-	-	-	-				
	2	-	-	-	-	-				
	3	-	-	-	-	-				
	4	-	-	-	-	-				
	5	-	-	-	-	-				
	6	-	-	-	-	-				
	7	-	-	-	-	-				
	8	-	-	-	-	-				
	9	-	-	-	-	-				
	10	-	-	-	-	-				
	11	-	-	-	-	-				
	12	-	-	-	-	-				
	13	-	-	-	-	-				
	14	-	-	-	-	-				
	15	-	-	-	-	-				
	16	-	-	-	-	-				
	17	-	-	-	-	-				
	18	-	-	-	-	-				
	19	-	-	-	-	-				
	20	-	-	-	-	-				
	21	-	-	-	-	-				
	22	-	-	-	-	-				
	23	-	-	-	-	-				
	24	-	-	-	-	-				
	25	-	-	-	-	-				
	26	-	-	-	-	-				
	27	-	-	-	-	-				
	28	-	-	-	-	-				
	29	-	-	-	-	-				
	30	-	-	-	-	-				
	31	-	-	-	-	-				
	32	-	-	-	-	-				
	33	-	-	-	-	-				
	34	-	-	-	-	-				
	35	-	-	-	-	-				
	36	✓	✓	✓	✓	✓				

Index of Claims	Application/Control No.	Applicant(s)/Patent Under Reexamination
	10911211	RAO ET AL.
	Examiner	Art Unit
	DAVID WANG	2617

✓	Rejected	-	Cancelled	N	Non-Elected	A	Appeal
=	Allowed	÷	Restricted	I	Interference	O	Objected

☐ Claims renumbered in the same order as presented by applicant ☐ CPA ☐ T.D. ☐ R.1.47

CLAIM		DATE								
Final	Original	03/14/2008	12/09/2010	09/21/2011	06/12/2013	05/03/2014				
	37	✓	✓	✓	-	-				
	38		✓	✓	-	-				
	39				✓	✓				
	40				✓	✓				
	41				✓	✓				
	42				✓	✓				
	43				✓	✓				
	44					✓				
	45					✓				
	46					✓				
	47					✓				
	48					✓				
	49					✓				
	50					✓				
	51					✓				
	52					✓				
	53					✓				
	54					✓				
	55					✓				
	56					✓				
	57					✓				
	58					✓				
	59					✓				
	60					✓				
	61					✓				
	62					✓				
	63					✓				
	64					✓				
	65					✓				
	66					✓				
	67					✓				
	68					✓				
	69					✓				
	70					✓				
	71					✓				
	72					✓				

Search Notes	Application/Control No.	Applicant(s)/Patent Under Reexamination
	10911211	RAO ET AL.
	Examiner	Art Unit
	DAVID WANG	2617

CPC- SEARCHED		
Symbol	Date	Examiner

CPC COMBINATION SETS - SEARCHED		
Symbol	Date	Examiner

US CLASSIFICATION SEARCHED			
Class	Subclass	Date	Examiner
455709710	461221104	3/14/20083/14/20083/14/2008	DWDWDW

SEARCH NOTES		
Search Notes	Date	Examiner
please see attachedconsulted Duc Nguyen SPE regarding the use of the Logitech Harmony remote controllergoogle search for "(buy OR purchase) applications from mobile phone"google search for "finding network with GPS location" and "(detecting OR sensing) (home OR office OR work) environment GPS"consulted Huy PhanSearch East see attached.	3/14/20083/11/200812/3/201012/9/201012/9/2010	DWDWDWDWDW

INTERFERENCE SEARCH			
US Class/ CPC Symbol	US Subclass / CPC Group	Date	Examiner

Doc code: RCEX
Doc description: Request for Continued Examination (RCE)

PTO/SB/30EFS (07-09)
Approved for use through 07/31/2012. OMB 0651-0031
U.S. Patent and Trademark Office; U.S. DEPARTMENT OF COMMERCE
Under the Paperwork Reduction Act of 1995, no persons are required to respond to a collection of information unless it contains a valid OMB control number.

REQUEST FOR CONTINUED EXAMINATION(RCE)TRANSMITTAL
(Submitted Only via EFS-Web)

Application Number	10911211	Filing Date	2014-10-13	Docket Number (if applicable)	IPHLNZ00501	Art Unit	2644
First Named Inventor	Sanjay K. RAO (as amended)			Examiner Name	Michael Irace		

This is a Request for Continued Examination (RCE) under 37 CFR 1.114 of the above-identified application.
Request for Continued Examination (RCE) practice under 37 CFR 1.114 does not apply to any utility or plant application filed prior to June 8, 1995, or to any design application. The Instruction Sheet for this form is located at WWW.USPTO.GOV

SUBMISSION REQUIRED UNDER 37 CFR 1.114

Note: If the RCE is proper, any previously filed unentered amendments and amendments enclosed with the RCE will be entered in the order in which they were filed unless applicant instructs otherwise. If applicant does not wish to have any previously filed unentered amendment(s) entered, applicant must request non-entry of such amendment(s).

☐ Previously submitted. If a final Office action is outstanding, any amendments filed after the final Office action may be considered as a submission even if this box is not checked.

☐ Consider the arguments in the Appeal Brief or Reply Brief previously filed on _____

☐ Other _____

☒ Enclosed

☒ Amendment/Reply

☐ Information Disclosure Statement (IDS)

☐ Affidavit(s)/ Declaration(s)

☒ Other Supplemental ADS, Extension of Time

MISCELLANEOUS

☐ Suspension of action on the above-identified application is requested under 37 CFR 1.103(c) for a period of months _____ (Period of suspension shall not exceed 3 months; Fee under 37 CFR 1.17(i) required)

☐ Other _____

FEES

☒ **The RCE fee under 37 CFR 1.17(e) is required by 37 CFR 1.114 when the RCE is filed.**
The Director is hereby authorized to charge any underpayment of fees, or credit any overpayments, to Deposit Account No 503973

SIGNATURE OF APPLICANT, ATTORNEY, OR AGENT REQUIRED

☒ Patent Practitioner Signature

☐ Applicant Signature

PTO/SB/30EFS (07-09)
Approved for use through 07/31/2012. OMB 0651-0031
U.S. Patent and Trademark Office; U.S. DEPARTMENT OF COMMERCE
Under the Paperwork Reduction Act of 1995, no persons are required to respond to a collection of information unless it contains a valid OMB control number.

Signature of Registered U.S. Patent Practitioner			
Signature	/Johney U. Han/	Date (YYYY-MM-DD)	2014-11-06
Name	Johney U. Han	Registration Number	45565

This collection of information is required by 37 CFR 1.114. The information is required to obtain or retain a benefit by the public which is to file (and by the USPTO to process) an application. Confidentiality is governed by 35 U.S.C. 122 and 37 CFR 1.11 and 1.14. This collection is estimated to take 12 minutes to complete, including gathering, preparing, and submitting the completed application form to the USPTO. Time will vary depending upon the individual case. Any comments on the amount of time you require to complete this form and/or suggestions for reducing this burden, should be sent to the Chief Information Officer, U.S. Patent and Trademark Office, U.S. Department of Commerce, P.O. Box 1450, Alexandria, VA 22313-1450.

If you need assistance in completing the form, call 1-800-PTO-9199 and select option 2.

Privacy Act Statement

The Privacy Act of 1974 (P.L. 93-579) requires that you be given certain information in connection with your submission of the attached form related to a patent application or patent. Accordingly, pursuant to the requirements of the Act, please be advised that: (1) the general authority for the collection of this information is 35 U.S.C. 2(b)(2); (2) furnishing of the information solicited is voluntary; and (3) the principal purpose for which the information is used by the U.S. Patent and Trademark Office is to process and/or examine your submission related to a patent application or patent. If you do not furnish the requested information, the U.S. Patent and Trademark Office may not be able to process and/or examine your submission, which may result in termination of proceedings or abandonment of the application or expiration of the patent.

The information provided by you in this form will be subject to the following routine uses:

1. The information on this form will be treated confidentially to the extent allowed under the Freedom of Information Act (5 U.S.C. 552) and the Privacy Act (5 U.S.C. 552a). Records from this system of records may be disclosed to the Department of Justice to determine whether the Freedom of Information Act requires disclosure of these records.

2. A record from this system of records may be disclosed, as a routine use, in the course of presenting evidence to a court, magistrate, or administrative tribunal, including disclosures to opposing counsel in the course of settlement negotiations.

3. A record in this system of records may be disclosed, as a routine use, to a Member of Congress submitting a request involving an individual, to whom the record pertains, when the individual has requested assistance from the Member with respect to the subject matter of the record.

4. A record in this system of records may be disclosed, as a routine use, to a contractor of the Agency having need for the information in order to perform a contract. Recipients of information shall be required to comply with the requirements of the Privacy Act of 1974, as amended, pursuant to 5 U.S.C. 552a(m).

5. A record related to an International Application filed under the Patent Cooperation Treaty in this system of records may be disclosed, as a routine use, to the International Bureau of the World Intellectual Property Organization, pursuant to the Patent Cooperation Treaty.

6. A record in this system of records may be disclosed, as a routine use, to another federal agency for purposes of National Security review (35 U.S.C. 181) and for review pursuant to the Atomic Energy Act (42 U.S.C. 218(c)).

7. A record from this system of records may be disclosed, as a routine use, to the Administrator, General Services, or his/her designee, during an inspection of records conducted by GSA as part of that agency's responsibility to recommend improvements in records management practices and programs, under authority of 44 U.S.C. 2904 and 2906. Such disclosure shall be made in accordance with the GSA regulations governing inspection of records for this purpose, and any other relevant (i.e., GSA or Commerce) directive. Such disclosure shall not be used to make determinations about individuals.

8. A record from this system of records may be disclosed, as a routine use, to the public after either publication of the application pursuant to 35 U.S.C. 122(b) or issuance of a patent pursuant to 35 U.S.C. 151. Further, a record may be disclosed, subject to the limitations of 37 CFR 1.14, as a routine use, to the public if the record was filed in an application which became abandoned or in which the proceedings were terminated and which application is referenced by either a published application, an application open to public inspections or an issued patent.

9. A record from this system of records may be disclosed, as a routine use, to a Federal, State, or local law enforcement agency, if the USPTO becomes aware of a violation or potential violation of law or regulation.

I hereby certify that this correspondence is being electronically transmitted to the USPTO on the date shown below.

Date: November 6, 2014 Signature: /Laura L. Gallagher/ (Laura L. Gallagher)

IN THE UNITED STATES PATENT AND TRADEMARK OFFICE

Application No.:	10/911,211
Confirmation No.:	7409
Filing Date:	October 13, 2004
Inventor(s):	Sanjay K. Rao et al. (as amended)
Title:	Multifunction Mobile Devices and Appliance Control (as amended)
Examiner:	Michael Irace
Group Art Unit:	2644

RESPONSE TO FINAL OFFICE ACTION

Mail Stop RCE
Commissioner for Patents
P.O. Box 1450
Alexandria, VA 22313-1450

Sir:

This is in response to the final Office Action dated May 6, 2014 for which a response was due on August 6, 2014. Filed herewith is a Petition and fee for a three-month extension of time thereby extending the deadline for response to November 6, 2014. Accordingly, this response is timely filed. Reconsideration and allowance of the pending claims, as amended, in light of the Remarks presented herein are respectfully requested.

Amendments to the Specification begin on page 2 of this paper.

Amendments to the Claims are reflected in the listing of claims which begins on page 3 of this paper.

Remarks begin on page 11 of this paper.

AMENDMENTS TO THE SPECIFICATION

On page 1, please amend the title, as follows:

Multifunction Mobile Devices and Appliance Control ~~Dynamically Configurable IP Based Wireless Device and Wireless Networks~~

On page 1, please amend the paragraph beginning on line 9, as follows:

The present application is a continuation-in-part of copending application entitled INTELLIGENT KEYBOARD SYSTEM, Serial No. 09/281,739, filed June 4, 1999 (now U.S. Pat. 6,169,789)~~, which is a continuation-in-part application of a now abandoned application entitled A SYSTEM LEVEL SCHEME TO CONTROL INTELLIGENT APPLIANCES, Serial No. 081764,903 filed December 16, 1996~~.

On page 2, please amend the paragraph beginning on line 21, as follows:

FIGS. 2A-2C show variations of ~~is an embodiment of a~~ comprehensive wireless networking schemes.

AMENDMENTS TO THE CLAIMS

This listing of claims will replace all prior versions, and listings, of claims in the application:

In the claims

1.-35. (Canceled)

36. (Currently Amended): A method for a mobile device using a server, the method comprising:

accepting an upload of software to a server configured for use by a plurality of mobile devices and further configured to provide a plurality of different software functions to mobile devices;

storing data on the server, the data comprising a plurality of functional instruction sets, software, or mobile device configuration software which is configured to operate and control components of mobile device hardware, wherein said server is at a remote location from the one or more mobile devices, and wherein the server is enabled with ~~accessible over an~~ Internet Protocol connectivity ~~network~~;

configuring the server to be used for by the one or more mobile devices such that the server functions as a repository of software for the mobile device and as an exchange for software for mobile devices;

configuring the one or more mobile devices to use the server to download the software using a configuration setting;

wherein the mobile device remotely requests software from the server using a wireless network,

wherein the server stores in a storage medium an association of the software with the mobile device and a user profile,

wherein the mobile device downloads software or a functional instruction set from the server using a wireless communication unit,

wherein the mobile device stores the software or the functional instruction set in a storage medium, and

wherein the mobile device includes one or more functions of a cellular telephone, PDA, handheld computer, or multifunction communication device, or combinations thereof, and

wherein a processor of the mobile device is configured to execute the software ~~or functional instruction sets~~ so as to control the hardware of the mobile device and wherein the mobile device is configured to transmit and receive at a plurality of frequencies.

37.-38. (Canceled)

39. (Currently Amended): A system comprising:

a remote server, the server configured to store wireless device software for a plurality of different functions or applications for use by a plurality of wireless devices,

wherein the remote server stores in memory software or functional instructions sets for a wireless device,

wherein the remote server sends to the wireless device software or functional instruction sets,

wherein the remote server stores profiles ~~or other~~ of user specific information,

wherein the ~~one or more~~ wireless devices ~~are configured~~ is enabled for voice and data communication,

wherein the wireless device includes one or more functions of a cellular telephone, PDA, handheld computer, or multifunction communication device, or combinations thereof,

wherein the wireless device is configured to download the software from the remote server using an Internet protocol ~~data network~~,

wherein the software is configured for use by the wireless device,

wherein the software controls a plurality of hardware components on the wireless device, and

wherein the server is enabled to provide a plurality of software and instruction sets for control of the wireless device for receipt by the wireless device wherein the device is enabled with software to control and command intelligent appliance using a server,

wherein said software includes macros for control of an appliance; and wherein the wireless device is enabled to control one or more appliances using a voice command.

40. (Previously Presented): The system of claim 39, wherein the profiles contain information for both a user and the wireless device.

41. (Currently Amended): A wireless electronic device or mobile device, the device comprising:

a processor;

a memory;

a unit for wireless communication;

wherein the device is capable of voice and data communication,

wherein the device connects to a server,

~~wherein the device downloads a software application or a functional instruction set from the server,~~

~~wherein the software or the functional instruction set is configured to operate and control components of device hardware,~~

wherein the device includes one or more functions of a cellular telephone, PDA, handheld computer, or multifunction communication device, or combinations thereof,

wherein the software ~~or the functional instruction set~~ is associated with a user and the device stored in a profile,

~~wherein the wireless device is configured to download a plurality of software from the server,~~

wherein the server is configured to store software ~~or functional instruction sets~~ for a plurality of wireless devices and for a plurality of applications for the plurality of wireless devices, ~~and~~

~~wherein the mobile device identifies a set of software to be downloaded from the server~~

wherein the device is enabled to communicate on a plurality of frequencies,

wherein the device is enabled for voice and data communication,

wherein the device is enabled for voice communication using cellular, and

wherein the device is enabled for wireless voice communication using a local area network.

42. (Previously Presented): The device of claim 40, wherein the device downloads an application to function as a remote control for one or more devices including a television.

43. (Currently Amended): A system comprising:

a wireless device or mobile device including functions of one or more of a cellular telephone, PDA, handheld computer, or multifunction communication device or combinations thereof, the wireless device configured to receive a non-transitory computer readable medium from a server located at a remote location separate from the wireless device, the server configured to store a plurality of different application software or functional instructions for a plurality of wireless devices, one of the software application including a non-transitory computer readable storage medium for a wireless device comprising:

an application software to be run by a processor on the wireless device,

wherein the wireless device is in further communication with a television configured to receive wireless commands over a network,

wherein the wireless device is configured to send a request to the television,

wherein the request comprises a control function for the television,

wherein the wireless device is configured to send said commands using a local home IP network, and

wherein the communication between the television and the wireless device is over a IP based network as part of a home network,

wherein the wireless device obtains from the server a plurality of software for the control of a plurality of home appliances,

wherein commands to the control the one or more appliances are voice actuated based on input to the wireless device, and

wherein the device operates using a plurality of frequencies.

44. (Previously Presented): The system of claim 43, wherein the wireless device is configured to communicate directly to the television.

45. (Previously Presented): The system of claim 43, wherein the wireless device is configured to communicate a set of commands to a server, the server configured to communicate said commands to the television.

46. (Previously Presented): The system of claim 43, wherein the wireless device is configured to communicate a set of commands over a network to a network switch box over a wireless local area network, and wherein the network switch box is configured to transmit said commands to a television.

47. (Previously Presented): The system of claims 36, wherein the server provides software for the configuration of the mobile or wireless device as an IP telephone.

48. (Previously Presented): The system of claims 36, wherein the download of the software is based on a hierarchy of network paths.

49. (Canceled)

50. (Currently Amended): The system of claims 36, wherein the device is configured ~~with GPS~~ for location sensing through use of both GPS and the location of network box and reconfigures one or more parameters based on the location ~~and uses location to determine when to download a software application data and from which server to download the application~~.

51. (Previously Presented): The system of claims 36, wherein the mobile device is configured to download an application for controlling a garage door opener.

52. (Previously Presented): The system of claims 36, wherein the mobile device is configured to function as an internet protocol IP phone.

53. (Currently Amended): The system of claims 36, wherein the server is collocated with a wireless carrier.

54. (Currently Amended): The system of claims 36, wherein the server is further in communication with a network box for use in a home environment ~~collocated with a wireless hardware vendor~~.

55. (Currently Amended): The system of claims 36, wherein the server is collocated with an office network.

56. (Currently Amended): The system of claims 36, wherein the mobile device serves as a remote controller for controlling intelligent office appliances ~~downloads a software application to control a copier~~.

57. (Previously Presented): The system of claims 39, wherein responsive to a request from the one or more wireless device to a website or URL associated with a website server or a network environment, the one or more wireless device receives an indicator of a software application to be downloaded from the remote server,

58. (Currently Amended): The system of claims 57, wherein the server delivers content not when device is in a carrier domain ~~downloading of said software is placed into an inactive download state when the device is connected to a first type of network, and~~

~~wherein the wireless device is enabled with a configuration mode such that responsive to connecting to a second network type the mobile device downloads the software from the servers.~~

59. (Canceled)

60. (Currently Amended): The system of claims 39, wherein the device determines a precise location using both GPS location and a network box location ~~is configured with GPS for location sensing and uses location to determine when to download a software application data and from which server to download the application~~.

61. (Previously Presented): The system of claims 39, wherein the device is configured to download an application for controlling a garage door opener.

62. (Previously Presented): The system of claims 39, wherein the device is configured to function as an internet protocol IP phone.

63. (Previously Presented): The system of claims 39, wherein the server is collocated with a wireless carrier.

64. (Currently Amended): The system of claims 39, further in communication with a network box for use in a home ~~wherein the server is collocated with a wireless hardware vendor~~.

65. (Previously Presented): The system of claims 39, wherein the server is colocated with an office network.

66. (Currently Amended): The system of claims 39, wherein the wireless device uses a command ~~downloads an application~~ to control a copier.

67. (Canceled)

68. (Currently Amended): The system of claim 41, wherein the server delivers content not when device is in a carrier domain ~~wherein the downloading of said software is placed into an inactive download state when the device is connected to a first type of network, and~~

~~wherein the mobile device is enabled with a configuration mode such that responsive to connecting to a second network type the mobile device downloads the software from the servers~~.

69. (Previously Presented): The system of claim 41, wherein the server provides software for the configuration of the mobile or wireless device as an IP (Internet Protocol) telephone.

70. (Previously Presented): The system of claim 41, wherein the download of the application is based on a hierarchy of network paths.

71. (Currently Amended): The system of claim 41, wherein the download from the server to the device is in a watchdog state and inactive ~~of the software is based on the available bandwidth of a first network and a second network~~.

72. (Previously Presented): The system of claim 41, wherein the download of the software is based on a request to a URL associated with a server.

73. (New): The system of claim 41, wherein a home server functions to controls a plurality of home intelligent appliances.

74. (New): The System of claim 41, wherein the device communicates to a home server commands including starting and stopping an operation at a desired time, and wherein the home server controls one or more home intelligent appliances.

REMARKS

Claims 36-72 were pending in the present application. By virtue of this response, claims 37-38, 49, 59, 67 have been canceled, claims 36, 39, 41, 43, 50, 53-56, 58, 60, 64, 66, 68, 71 have been amended, and new claims 73-74 have been added. Accordingly, claims 36, 39-48, 50-58, 60-66, and 68-74 are currently under consideration.

The specification has been amended in the CROSS REFERENCE TO RELATED APPLICATIONS as well as to correct for typographical errors in the BRIEF DESCRIPTION OF THE DRAWINGS to include FIGS. 2A-2C. No new matter has been added.

Amendment and cancellation of certain claims is not to be construed as a dedication to the public of any of the subject matter of the claims as previously presented. No new matter has been added.

Rejections under 35 U.S.C. §112

A. Claims 48 and 70 are rejected under 35 U.S.C. §112(a) and pre-AIA 35 U.S.C. §112, first paragraph, as allegedly failing to comply with the written description requirement.

Applicant respectfully traverses this rejection and submits that these claims are fully supported by the specification. For instance, the specification discloses at p. 11, lines 10-14:

> *The CT IMD 202 in conjunction with the Server C 214 decides the preferred mode to be in. There may be a primary mode and several secondary modes or a hierarchy of modes. The primary mode may be local office 232 and then the public carrier 204 loop, followed by the home 262 loop. This switching may be automatic or per specific functional instruction set 218 and preferences stored on the Server C 214 or in the CTIMD 202 itself.*

Furthermore, the present application also claims priority to U.S. Pat. App. 09/281,739 filed June 4, 1999 (now U.S. Pat. 6,169,789) which further provides support where: "[t]hus, there may exist within the home/office environment a hierarchy of transmit/receive devices …." (U.S. Pat. 6,169,789 at col. 4, lines 10-12.)

Hence, claims 48 and 70 are fully supported by the specification as-filed. Accordingly, Applicant respectfully requests the reconsideration and withdrawal of the rejection under 35 U.S.C. §112(a) and pre-AIA 35 U.S.C. §112, first paragraph.

B. Claims 56 and 66 are rejected under 35 U.S.C. §112(a) and pre-AIA 35 U.S.C. §112, first paragraph, as allegedly failing to comply with the written description requirement.

Without agreeing with the merits of the rejection, Applicant has amended the claims merely to further prosecution. Accordingly, Applicant respectfully requests the reconsideration and withdrawal of the rejection under 35 U.S.C. §112(a) and pre-AIA 35 U.S.C. §112, first paragraph.

C. Claims 49, 59 and 67 are rejected under 35 U.S.C. §112(a) and pre-AIA 35 U.S.C. §112, first paragraph, as allegedly failing to comply with the written description requirement.

Without agreeing with the merits of the rejection, Applicant has canceled the claims merely to further prosecution. Accordingly, Applicant respectfully requests the reconsideration and withdrawal of the rejection under 35 U.S.C. §112(a) and pre-AIA 35 U.S.C. §112, first paragraph.

D. Claims 54 and 64 are rejected under 35 U.S.C. §112(a) and pre-AIA 35 U.S.C. §112, first paragraph, as allegedly failing to comply with the written description requirement.

Without agreeing with the merits of the rejection, Applicant has amended the claims merely to further prosecution. Accordingly, Applicant respectfully requests the reconsideration and withdrawal of the rejection under 35 U.S.C. §112(a) and pre-AIA 35 U.S.C. §112, first paragraph.

E. Claims 58, 68, and 71 are rejected under 35 U.S.C. §112(a) and pre-AIA 35 U.S.C. §112, first paragraph, as allegedly failing to comply with the written description requirement.

Without agreeing with the merits of the rejection, Applicant has amended the claims merely to further prosecution. Accordingly, Applicant respectfully requests the reconsideration and withdrawal of the rejection under 35 U.S.C. §112(a) and pre-AIA 35 U.S.C. §112, first paragraph.

F. Claims 50 and 60 are rejected under 35 U.S.C. §112(a) and pre-AIA 35 U.S.C. §112, first paragraph, as allegedly failing to comply with the written description requirement.

Without agreeing with the merits of the rejection, Applicant has amended the claims merely to further prosecution. Accordingly, Applicant respectfully requests the reconsideration and withdrawal of the rejection under 35 U.S.C. §112(a) and pre-AIA 35 U.S.C. §112, first paragraph.

Rejections under 35 U.S.C. §103

A. Claims 36 and 41 are rejected under pre-AIA 35 U.S.C. §103(a) as allegedly being unpatentable over Ondeck (US Pub. 2002/0046083) in view of Bates (US Pat. 6,628,964) and Bell (US Pat. 7,894,474).

Applicant respectfully traverses the rejection and submits that each of the cited references form an improper basis for rejection. The present application has a filing date of October 13, 2004 with priority to at least June 4, 1999. However, Ondeck has a filing date of July 8, 1999; Bates has a filing date of July 20, 2000; and Bell has a filing date of September 10, 1999, each of which is after the priority date of June 4, 1999. Hence, these references cannot be applied as a basis for rejection.

In an effort to further advance prosecution, independent claim 36 has also been amended to clarify the server as an exchange and further where the wireless device functions transmits and receives at different frequencies. The claim recites "configuring the server to be used for by the one or more mobile devices such that the server functions as a repository of software for the mobile device and as an exchange for software for mobile devices" and further "wherein the mobile device downloads software or a functional instruction set from the server using a wireless communication unit" and additionally "wherein the mobile device is configured to transmit and receive at a plurality of frequencies."

Independent claim 41 has been amended to now recite "wherein the device is enabled to communicate on a plurality of frequencies, wherein the device is enabled for voice and data communication, wherein the device is enabled for voice communication using cellular, and wherein the device is enabled for wireless voice communication using a local area network."

Support for the amendments to the independent claims and newly added claims 73-74 can be found throughout the specification as-filed. For example, see p. 5, lines 3-5 & 19-22; p. 6, lines 5-7, 24, & 22-26; p. 11, lines 26-28; p. 12, lines 24-28.

Generally, each of the cited references are directed to commands that a remote controller can use rather than the actual software itself. Moreover, none of the references teach or suggest wireless communication enabled over multiple frequencies, and none of the references teach control of an appliance using servers but instead teach point-to-point, e.g., a mobile device directly controlling an appliance.

Turning now to the Ondeck, this reference fails to teach a system for downloading of software to the device where the software controls the device. Rather, Ondeck is concerned with "links to appliance-dependent control and feature option information." (Ondeck, [0032].) There is nothing to suggest that the "information" of Ondeck can provide software that controls the hardware of the device. Moreover, Ondeck further teaches where "... currently, a manufacturer may add an extra software application to an electronic device. The manufacturer would have to manually install this software or add a disk to the package, for all versions of Product X that are to go to Retailer Y." (Ondeck, [0011].)

Ondeck further describes "[a] user interface is provided at the site for the user to easily specify a target appliance, and thereafter selectively download the interface and control information that is available for the target appliance." Control information is not equivalent to software functions that controls the device.

Nothing in the Ondeck teaches the exchange aspect of a server and none of the cited references teach or suggest the need for multi-frequency devices but only teach the use of single frequency devices.

Therefore, each of the independent claims is patentable over the cited references alone or in combination and the dependent claims are patentable for at least the same reasons

above. Accordingly, Applicant respectfully requests the reconsideration and withdrawal of the rejection under pre-AIA 35 U.S.C. §103(a).

B. Claims 36-43 are rejected under pre-AIA 35 U.S.C. §103(a) as allegedly being unpatentable over Ondeck and Bell in view of Minnett (GB 2,294,563).

Each of the independent claims are patentable over Ondeck and Bell for at least the same reasons above. Moreover, the additionally cited reference of Minnett fails to teach or suggest the use of sending commands over an IP based network. A notable distinction is that traditional remote controls including those described by Minnett require point-to-point control through the use of IR but fails to teach network based control, as presently claimed, obviating the need for a direct line of site transmit/receive. Hence, Minnett fails to cure the defects of Ondeck and Bell.

Therefore, each of the independent claims is patentable over the cited references alone or in combination and the dependent claims are patentable for at least the same reasons above. Accordingly, Applicant respectfully requests the reconsideration and withdrawal of the rejection under pre-AIA 35 U.S.C. §103(a).

C. Claims 47, 49, 51-52, 56, 58-59, 61-62, 66-69, 71 are rejected under pre-AIA 35 U.S.C. §103(a) as allegedly being unpatentable over Ondeck and Bell and variously in view of King (US Pat. 6,308,083); Mattaway (US Pat. 6,131,121); Engbersen (US Pat. 6,341,304); Lee (US Pat. 8,670,405); Kretschman (US Pat. 6,167,464); Wood (US Pat. 6,453,127).

Applicant respectfully traverses these rejections for at least the same reasons above. As also discussed, Ondeck and Bell provide an improper basis for rejection and each of the additionally cited references of King, Mattaway, Engbersen, Lee, Kretschman, and Wood fail to cure the defects of Ondeck and Bell.

Furthermore, Engbersen has a filing date of September 23, 1999 which is after the priority date of the present application and therefore must be excluded as prior art. Additionally, Fig. 3 of Engbersen does not disclose any notion of multiple network paths but only describes bandwidth. It unclear how the device could access multiple network paths in

fact since the device as described by does not have the ability to access multiple network paths from the device as it is not even a dual-mode networked device.

On the contrary, the system as taught by Engbersen describes a bandwidth sharing system and a single "communication link" where a bandwidth "check is then made to determine sufficient bandwidth available". The Engbersen bandwith check is a separate device from the mobile device. Applicant's system makes use of two separate networks and network paths to download data. Additionally, Fig 4. of Engbersen teaches a system which "throttle down transfers to be less than or equal to the available bandwidth". On the contrary, Applicant's system uses a hierarchy of different networks and network paths to not be limited by the bandwidth of the network.

Therefore, each of the dependent claims is patentable for at least the same reasons above. Accordingly, Applicant respectfully requests the reconsideration and withdrawal of the rejection under pre-AIA 35 U.S.C. §103(a).

CONCLUSION

In view of the above, each of the presently pending claims in this application is believed to be in condition for allowance. Accordingly, the Examiner is respectfully requested to withdraw the outstanding rejections and pass this application to issue. If it is determined that a telephone conference would expedite the prosecution of this application, the Examiner is invited to telephone the undersigned at the number given below.

In the event the appropriate fee and/or petition is not filed herewith and the U.S. Patent and Trademark Office determines that an extension and/or other relief is required, Applicant petitions for any required relief including extensions of time and authorize the Commissioner to charge the cost of such petitions and/or other fees due in connection with this filing to **Deposit Account No. 50-3973** referencing Attorney Docket No. **IPHLNZ00501**. However, the Commissioner is not authorized to charge the cost of the issue fee to the Deposit Account.

Respectfully submitted,

/Johney U. Han/

Johney U. Han
Registration No. 45,565

Customer No. 40518
Levine Bagade Han LLP
2400 Geng Road, Suite 120
Palo Alto, CA 94303
Direct: (650) 242-4217
Fax: (650) 284-2180

PTO/SB/14 (11-08)
Approved for use through 01/31/2014. OMB 0651-0032
U.S. Patent and Trademark Office; U.S. DEPARTMENT OF COMMERCE
Under the Paperwork Reduction Act of 1995, no persons are required to respond to a collection of information unless it contains a valid OMB control number.

Supplemental Application Data Sheet	Attorney Docket Number	IPHLNZ00501
	Application Number	10/911,211
Title of Invention	Multifunction Mobile Devices and Appliance Control ~~Dynamically configurable IP based wireless device and wireless networks~~	

The application data sheet is part of the provisional or nonprovisional application for which it is being submitted. The following form contains the bibliographic data arranged in a format specified by the United States Patent and Trademark Office as outlined in 37 CFR 1.76.
This document may be completed electronically and submitted to the Office in electronic format using the Electronic Filing System (EFS) or the document may be printed and included in a paper filed application.

Secrecy Order 37 CFR 5.2

☐ Portions or all of the application associated with this Application Data Sheet may fall under a Secrecy Order pursuant to 37 CFR 5.2 (Paper filers only. Applications that fall under Secrecy Order may not be filed electronically.)

Applicant Information:

Applicant 1

Applicant Authority	◉ Inventor	○ Legal Representative under 35 U.S.C. 117	○ Party of Interest under 35 U.S.C. 118

Prefix	Given Name	Middle Name	Family Name	Suffix
	~~Raman~~ Sanjay	K.	Rao	

Residence Information (Select One) ◉ US Residency ○ Non US Residency ○ Active US Military Service

City	Palo Alto	State/Province	CA	Country of Residence	US

Citizenship under 37 CFR 1.41(b)	US

Mailing Address of Applicant:

Address 1	3087 Alexis Drive		
Address 2			
City	Palo Alto	State/Province	CA
Postal Code	94304	Country	US

Applicant 2

Applicant Authority	◉ Inventor	○ Legal Representative under 35 U.S.C. 117	○ Party of Interest under 35 U.S.C. 118

Prefix	Given Name	Middle Name	Family Name	Suffix
	Sunil	K.	Rao	

Residence Information (Select One) ◉ US Residency ○ Non US Residency ○ Active US Military Service

City	Palo Alto	State/Province	CA	Country of Residence	US

Citizenship under 37 CFR 1.41(b)	US

Mailing Address of Applicant:

Address 1	3087 Alexis Drive		
Address 2			
City	Palo Alto	State/Province	CA
Postal Code	94304	Country	US

Applicant 3

Applicant Authority	◉ Inventor	○ Legal Representative under 35 U.S.C. 117	○ Party of Interest under 35 U.S.C. 118

Prefix	Given Name	Middle Name	Family Name	Suffix
	~~Sanjay~~ Raman	K.	Rao	

Residence Information (Select One) ◉ US Residency ○ Non US Residency ○ Active US Military Service

City	Palo Alto	State/Province	CA	Country of Residence	US

PTO/SB/14 (11-08)
Approved for use through 01/31/2014. OMB 0651-0032
U.S. Patent and Trademark Office; U.S. DEPARTMENT OF COMMERCE
Under the Paperwork Reduction Act of 1995, no persons are required to respond to a collection of information unless it contains a valid OMB control number.

Supplemental Application Data Sheet	Attorney Docket Number	IPHLNZ00501
	Application Number	10/911,211
Title of Invention	Multifunction Mobile Devices and Appliance Control ~~Dynamically configurable IP based wireless device and wireless networks~~	

Citizenship under 37 CFR 1.41(b)	US		
Mailing Address of Applicant:			
Address 1	3087 Alexis Drive		
Address 2			
City	Palo Alto	**State/Province**	CA
Postal Code	94304	**Country**	US

All Inventors Must Be Listed - Additional Inventor Information blocks may be generated within this form by selecting the **Add** button. Add

Correspondence Information:

Enter either Customer Number or complete the Correspondence Information section below.
For further information see 37 CFR 1.33(a).

☐ **An Address is being provided for the correspondence information of this application.**

Customer Number	40518		
Email Address	Patent@LBHIP.com	Add Email	Remove Email

Application Information:

Title of the Invention	Multifunction Mobile Devices and Appliance Control ~~Dynamically configurable IP based wireless device and wireless networks.~~		
Attorney Docket Number	IPHLNZ00501	**Small Entity Status Claimed**	☒
Application Type	Nonprovisional		
Subject Matter	Utility		
Suggested Class (if any)		**Sub Class (if any)**	
Suggested Technology Center (if any)			
Total Number of Drawing Sheets (if any)	5	**Suggested Figure for Publication (if any)**	

Publication Information:

☐ Request Early Publication (Fee required at time of Request 37 CFR 1.219)

☒ **Request Not to Publish.** I hereby request that the attached application not be published under 35 U.S.C. 122(b) and certify that the invention disclosed in the attached application **has not and will not** be the subject of an application filed in another country, or under a multilateral international agreement, that requires publication at eighteen months after filing.

Representative Information:

Representative information should be provided for all practitioners having a power of attorney in the application. Providing this information in the Application Data Sheet does not constitute a power of attorney in the application (see 37 CFR 1.32).
Enter either Customer Number or complete the Representative Name section below. If both sections are completed the Customer Number will be used for the Representative Information during processing.

Please Select One:	◉ Customer Number	○ US Patent Practitioner	○ Limited Recognition (37 CFR 11.9)

PTO/SB/14 (11-08)
Approved for use through 01/31/2014. OMB 0651-0032
U.S. Patent and Trademark Office; U.S. DEPARTMENT OF COMMERCE
Under the Paperwork Reduction Act of 1995, no persons are required to respond to a collection of information unless it contains a valid OMB control number.

Supplemental Application Data Sheet	Attorney Docket Number	IPHLNZ00501
	Application Number	10/911,211
Title of Invention	Multifunction Mobile Devices and Appliance Control ~~Dynamically configurable IP based wireless device and wireless networks~~	

Customer Number	40518

Domestic Benefit/National Stage Information:

This section allows for the applicant to either claim benefit under 35 U.S.C. 119(e), 120, 121, or 365(c) or indicate National Stage entry from a PCT application. Providing this information in the application data sheet constitutes the specific reference required by 35 U.S.C. 119(e) or 120, and 37 CFR 1.78(a)(2) or CFR 1.78(a)(4), and need not otherwise be made part of the specification.

Prior Application Status	Patented				Remove
Application Number	Continuity Type	Prior Application Number	Filing Date (YYYY-MM-DD)	Patent Number	Issue Date (YYYY-MM-DD)
	Division of	09591381	2000-06-09	7929950	2011-04-19

Additional Domestic Benefit/National Stage Data may be generated within this form by selecting the **Add** button.

Foreign Priority Information:

This section allows for the applicant to claim benefit of foreign priority and to identify any prior foreign application for which priority is not claimed. Providing this information in the application data sheet constitutes the claim for priority as required by 35 U.S.C. 119(b) and 37 CFR 1.55(a).

			Remove
Application Number	Country[i]	Parent Filing Date (YYYY-MM-DD)	Priority Claimed
			◯ Yes ◯ No

Additional Foreign Priority Data may be generated within this form by selecting the **Add** button.

Assignee Information:

Providing this information in the application data sheet does not substitute for compliance with any requirement of part 3 of Title 37 of the CFR to have an assignment recorded in the Office.

Assignee 1			
If the Assignee is an Organization check here. ☒			
Organization Name	IP Holdings, Inc.		
Mailing Address Information:			
Address 1	~~3099~~ 3087 Alexis Drive		
Address 2			
City	Palo Alto	**State/Province**	CA
Country[i]	US	Postal Code	94304
Phone Number		Fax Number	
Email Address			

Additional Assignee Data may be generated within this form by selecting the **Add** button.

Signature:

A signature of the applicant or representative is required in accordance with 37 CFR 1.33 and 10.18. Please see 37 CFR 1.4(d) for the form of the signature.

PTO/SB/14 (11-08)
Approved for use through 01/31/2014. OMB 0651-0032
U.S. Patent and Trademark Office; U.S. DEPARTMENT OF COMMERCE
Under the Paperwork Reduction Act of 1995, no persons are required to respond to a collection of information unless it contains a valid OMB control number.

Supplemental Application Data Sheet	Attorney Docket Number	IPHLNZ00501
	Application Number	10/911,211
Title of Invention	Multifunction Mobile Devices and Appliance Control ~~Dynamically configurable IP based wireless device and wireless networks~~	

Signature	/Johney U. Han/			Date (YYYY-MM-DD)	2014-11-06
First Name	Johney	Last Name	Han	Registration Number	45565

This collection of information is required by 37 CFR 1.76. The information is required to obtain or retain a benefit by the public which is to file (and by the USPTO to process) an application. Confidentiality is governed by 35 U.S.C. 122 and 37 CFR 1.14. This collection is estimated to take 23 minutes to complete, including gathering, preparing, and submitting the completed application data sheet form to the USPTO. Time will vary depending upon the individual case. Any comments on the amount of time you require to complete this form and/or suggestions for reducing this burden, should be sent to the Chief Information Officer, U.S. Patent and Trademark Office, U.S. Department of Commerce, P.O. Box 1450, Alexandria, VA 22313-1450. DO NOT SEND FEES OR COMPLETED FORMS TO THIS ADDRESS. **SEND TO: Commissioner for Patents, P.O. Box 1450, Alexandria, VA 22313-1450.**

Privacy Act Statement

The Privacy Act of 1974 (P.L. 93-579) requires that you be given certain information in connection with your submission of the attached form related to a patent application or patent. Accordingly, pursuant to the requirements of the Act, please be advised that: (1) the general authority for the collection of this information is 35 U.S.C. 2(b)(2); (2) furnishing of the information solicited is voluntary; and (3) the principal purpose for which the information is used by the U.S. Patent and Trademark Office is to process and/or examine your submission related to a patent application or patent. If you do not furnish the requested information, the U.S. Patent and Trademark Office may not be able to process and/or examine your submission, which may result in termination of proceedings or abandonment of the application or expiration of the patent.

The information provided by you in this form will be subject to the following routine uses:

1. The information on this form will be treated confidentially to the extent allowed under the Freedom of Information Act (5 U.S.C. 552) and the Privacy Act (5 U.S.C. 552a). Records from this system of records may be disclosed to the Department of Justice to determine whether the Freedom of Information Act requires disclosure of these records.

2. A record from this system of records may be disclosed, as a routine use, in the course of presenting evidence to a court, magistrate, or administrative tribunal, including disclosures to opposing counsel in the course of settlement negotiations.

3. A record in this system of records may be disclosed, as a routine use, to a Member of Congress submitting a request involving an individual, to whom the record pertains, when the individual has requested assistance from the Member with respect to the subject matter of the record.

4. A record in this system of records may be disclosed, as a routine use, to a contractor of the Agency having need for the information in order to perform a contract. Recipients of information shall be required to comply with the requirements of the Privacy Act of 1974, as amended, pursuant to 5 U.S.C. 552a(m).

5. A record related to an International Application filed under the Patent Cooperation Treaty in this system of records may be disclosed, as a routine use, to the International Bureau of the World Intellectual Property Organization, pursuant to the Patent Cooperation Treaty.

6. A record in this system of records may be disclosed, as a routine use, to another federal agency for purposes of National Security review (35 U.S.C. 181) and for review pursuant to the Atomic Energy Act (42 U.S.C. 218(c)).

7. A record from this system of records may be disclosed, as a routine use, to the Administrator, General Services, or his/her designee, during an inspection of records conducted by GSA as part of that agency's responsibility to recommend improvements in records management practices and programs, under authority of 44 U.S.C. 2904 and 2906. Such disclosure shall be made in accordance with the GSA regulations governing inspection of records for this purpose, and any other relevant (i.e., GSA or Commerce) directive. Such disclosure shall not be used to make determinations about individuals.

8. A record from this system of records may be disclosed, as a routine use, to the public after either publication of the application pursuant to 35 U.S.C. 122(b) or issuance of a patent pursuant to 35 U.S.C. 151. Further, a record may be disclosed, subject to the limitations of 37 CFR 1.14, as a routine use, to the public if the record was filed in an application which became abandoned or in which the proceedings were terminated and which application is referenced by either a published application, an application open to public inspections or an issued patent.

9. A record from this system of records may be disclosed, as a routine use, to a Federal, State, or local law enforcement agency, if the USPTO becomes aware of a violation or potential violation of law or regulation.

PTO/AIA/22 (03-13)
Approved for use through 3/31/2013. OMB 0651-0031
U.S. Patent and Trademark Office; U.S. DEPARTMENT OF COMMERCE
Under the Paperwork Reduction Act of 1995, no persons are required to respond to a collection of information unless it displays a valid OMB control number.

PETITION FOR EXTENSION OF TIME UNDER 37 CFR 1.136(a)

Docket Number (Optional): IPHLNZ00501

Application Number: 10/911,211

Filed: October 13, 2004

For: Multifunction Mobile Devices and Appliance Control (as amended)

Art Unit: 2644

Examiner: Michael Irace

This is a request under the provisions of 37 CFR 1.136(a) to extend the period for filing a reply in the above-identified application.

The requested extension and fee are as follows (check time period desired and enter the appropriate fee below):

	Fee	Small Entity Fee	Micro Entity Fee	
☐ One month (37 CFR 1.17(a)(1))	$200	$100	$50	$
☐ Two months (37 CFR 1.17(a)(2))	$600	$300	$150	$
☑ Three months (37 CFR 1.17(a)(3))	$1,400	$700	$350	$ 700
☐ Four months (37 CFR 1.17(a)(4))	$2,200	$1,100	$550	$
☐ Five months (37 CFR 1.17(a)(5))	$3,000	$1,500	$750	$

☑ Applicant asserts small entity status. See 37 CFR 1.27.

☐ Applicant certifies micro entity status. See 37 CFR 1.29.
Form PTO/SB/15A or B or equivalent must either be enclosed or have been submitted previously.

☐ A check in the amount of the fee is enclosed.

☐ Payment by credit card. Form PTO-2038 is attached.

☐ The Director has already been authorized to charge fees in this application to a Deposit Account.

☑ The Director is hereby authorized to charge any fees which may be required, or credit any overpayment, to Deposit Account Number 50-3973.

☑ Payment made via EFS-Web.

WARNING: Information on this form may become public. Credit card information should not be included on this form. Provide credit card information and authorization on PTO-2038.

I am the

☐ applicant.

☑ attorney or agent of record. Registration number 45,565.

☐ attorney or agent acting under 37 CFR 1.34. Registration number _____.

/Johney U. Han/ — Signature

November 6, 2014 — Date

Johney U. Han — Typed or printed name

(650) 242-4217 — Telephone Number

NOTE: This form must be signed in accordance with 37 CFR 1.33. See 37 CFR 1.4 for signature requirements and certifications. Submit multiple forms if more than one signature is required, see below*.

☑ * Total of 1 forms are submitted.

This collection of information is required by 37 CFR 1.136(a). The information is required to obtain or retain a benefit by the public, which is to file (and by the USPTO to process) an application. Confidentiality is governed by 35 U.S.C. 122 and 37 CFR 1.11 and 1.14. This collection is estimated to take 6 minutes to complete, including gathering, preparing, and submitting the completed application form to the USPTO. Time will vary depending upon the individual case. Any comments on the amount of time you require to complete this form and/or suggestions for reducing this burden should be sent to the Chief Information Officer, U.S. Patent and Trademark Office, U.S. Department of Commerce, P.O. Box 1450, Alexandria, VA 22313-1450. DO NOT SEND FEES OR COMPLETED FORMS TO THIS ADDRESS. SEND TO: Mail Stop PCT, Commissioner for Patents, P.O. Box 1450, Alexandria, VA 22313-1450.

Electronic Patent Application Fee Transmittal

Application Number:	10911211
Filing Date:	13-Oct-2004
Title of Invention:	Dynamically configurable IP based wireless device and wireless networks
First Named Inventor/Applicant Name:	Raman K. Rao
Filer:	Laura Lan Shires
Attorney Docket Number:	IPHLNZ00501

Filed as Small Entity

Utility under 35 USC 111(a) Filing Fees

Description	Fee Code	Quantity	Amount	Sub-Total in USD($)
Basic Filing:				
Pages:				
Claims:				
Miscellaneous-Filing:				
PROCESSING FEE, EXCEPT PROV. APPLS.	2830	1	70	70
Petition:				
Patent-Appeals-and-Interference:				
Post-Allowance-and-Post-Issuance:				
Extension-of-Time:				

Description	Fee Code	Quantity	Amount	Sub-Total in USD($)
Extension - 3 months with $0 paid	2253	1	700	700
Miscellaneous:				
RCE - 2nd and Subsequent Request	2820	1	850	850
		Total in USD ($)		**1620**

Electronic Acknowledgement Receipt

EFS ID:	20631882
Application Number:	10911211
International Application Number:	
Confirmation Number:	7409
Title of Invention:	Dynamically configurable IP based wireless device and wireless networks
First Named Inventor/Applicant Name:	Raman K. Rao
Customer Number:	40518
Filer:	Laura Lan Shires
Filer Authorized By:	
Attorney Docket Number:	IPHLNZ00501
Receipt Date:	06-NOV-2014
Filing Date:	13-OCT-2004
Time Stamp:	19:54:22
Application Type:	Utility under 35 USC 111(a)

Payment information:

Submitted with Payment	yes
Payment Type	Credit Card
Payment was successfully received in RAM	$1620
RAM confirmation Number	5640
Deposit Account	
Authorized User	

File Listing:

Document Number	Document Description	File Name	File Size(Bytes)/ Message Digest	Multi Part /.zip	Pages (if appl.)

1	Request for Continued Examination (RCE)	01_IPHLNZ00501_20141106_rce_efs.pdf	697449 e75489d7146985eb9be20929833875cfc5393716	no	3
Warnings:					
Information:					
2		02_IPHLNZ00501_20141106_response_to_final_office_action.pdf	2731547 ca4205b27a7fc17bb266b3b660ed2851950be940	yes	17
	Multipart Description/PDF files in .zip description				
	Document Description		**Start**	**End**	
	Amendment Submitted/Entered with Filing of CPA/RCE		1	1	
	Specification		2	2	
	Claims		3	10	
	Applicant Arguments/Remarks Made in an Amendment		11	17	
Warnings:					
Information:					
3	Appendix to the Specification	03_IPHLNZ00501_20141106_supplemental_ads.pdf	1254955 a36e5e09c638a2af07d18ad5eadb41d7e9b0e0b9	no	5
Warnings:					
Information:					
4	Extension of Time	04_IPHLNZ00501_20141106_extension_of_time.pdf	220681 a5babed125a88d5b709164207f014f49ee28af03	no	1
Warnings:					
Information:					
5	Fee Worksheet (SB06)	fee-info.pdf	34097 d7452ab0eb989a993c7be787be0ec789a0e1d796	no	2
Warnings:					
Information:					
		Total Files Size (in bytes):	4938729		

This Acknowledgement Receipt evidences receipt on the noted date by the USPTO of the indicated documents, characterized by the applicant, and including page counts, where applicable. It serves as evidence of receipt similar to a Post Card, as described in MPEP 503.

New Applications Under 35 U.S.C. 111
If a new application is being filed and the application includes the necessary components for a filing date (see 37 CFR 1.53(b)-(d) and MPEP 506), a Filing Receipt (37 CFR 1.54) will be issued in due course and the date shown on this Acknowledgement Receipt will establish the filing date of the application.

National Stage of an International Application under 35 U.S.C. 371
If a timely submission to enter the national stage of an international application is compliant with the conditions of 35 U.S.C. 371 and other applicable requirements a Form PCT/DO/EO/903 indicating acceptance of the application as a national stage submission under 35 U.S.C. 371 will be issued in addition to the Filing Receipt, in due course.

New International Application Filed with the USPTO as a Receiving Office
If a new international application is being filed and the international application includes the necessary components for an international filing date (see PCT Article 11 and MPEP 1810), a Notification of the International Application Number and of the International Filing Date (Form PCT/RO/105) will be issued in due course, subject to prescriptions concerning national security, and the date shown on this Acknowledgement Receipt will establish the international filing date of the application.

PTO/SB/06 (09-11)
Approved for use through 1/31/2014. OMB 0651-0032
U.S. Patent and Trademark Office; U.S. DEPARTMENT OF COMMERCE
Under the Paperwork Reduction Act of 1995, no persons are required to respond to a collection of information unless it displays a valid OMB control number.

PATENT APPLICATION FEE DETERMINATION RECORD Substitute for Form PTO-875	Application or Docket Number 10/911,211	Filing Date 10/13/2004	☒ To be Mailed

ENTITY: ☐ LARGE ☒ SMALL ☐ MICRO

APPLICATION AS FILED – PART I

FOR	(Column 1) NUMBER FILED	(Column 2) NUMBER EXTRA	RATE ($)	FEE ($)
☐ BASIC FEE (37 CFR 1.16(a), (b), or (c))	N/A	N/A	N/A	
☐ SEARCH FEE (37 CFR 1.16(k), (i), or (m))	N/A	N/A	N/A	
☐ EXAMINATION FEE (37 CFR 1.16(o), (p), or (q))	N/A	N/A	N/A	
TOTAL CLAIMS (37 CFR 1.16(i))	minus 20 =	*	X $ =	
INDEPENDENT CLAIMS (37 CFR 1.16(h))	minus 3 =	*	X $ =	
☐ APPLICATION SIZE FEE (37 CFR 1.16(s))	If the specification and drawings exceed 100 sheets of paper, the application size fee due is $310 ($155 for small entity) for each additional 50 sheets or fraction thereof. See 35 U.S.C. 41(a)(1)(G) and 37 CFR 1.16(s).			
☐ MULTIPLE DEPENDENT CLAIM PRESENT (37 CFR 1.16(j))				
* If the difference in column 1 is less than zero, enter "0" in column 2.			TOTAL	

APPLICATION AS AMENDED – PART II

AMENDMENT **11/06/2014**

	(Column 1) CLAIMS REMAINING AFTER AMENDMENT		(Column 2) HIGHEST NUMBER PREVIOUSLY PAID FOR	(Column 3) PRESENT EXTRA	RATE ($)	ADDITIONAL FEE ($)
Total (37 CFR 1.16(i))	* 34	Minus	** 34	= 0	X $40 =	0
Independent (37 CFR 1.16(h))	* 4	Minus	***4	= 0	X $210 =	0
☐ Application Size Fee (37 CFR 1.16(s))						
☐ FIRST PRESENTATION OF MULTIPLE DEPENDENT CLAIM (37 CFR 1.16(j))						
					TOTAL ADD'L FEE	0

AMENDMENT

	(Column 1) CLAIMS REMAINING AFTER AMENDMENT		(Column 2) HIGHEST NUMBER PREVIOUSLY PAID FOR	(Column 3) PRESENT EXTRA	RATE ($)	ADDITIONAL FEE ($)
Total (37 CFR 1.16(i))	*	Minus	**	=	X $ =	
Independent (37 CFR 1.16(h))	*	Minus	***	=	X $ =	
☐ Application Size Fee (37 CFR 1.16(s))						
☐ FIRST PRESENTATION OF MULTIPLE DEPENDENT CLAIM (37 CFR 1.16(j))						
					TOTAL ADD'L FEE	

* If the entry in column 1 is less than the entry in column 2, write "0" in column 3.
** If the "Highest Number Previously Paid For" IN THIS SPACE is less than 20, enter "20".
*** If the "Highest Number Previously Paid For" IN THIS SPACE is less than 3, enter "3".
The "Highest Number Previously Paid For" (Total or Independent) is the highest number found in the appropriate box in column 1.

LIE
/NICHELE PETERSON/

This collection of information is required by 37 CFR 1.16. The information is required to obtain or retain a benefit by the public which is to file (and by the USPTO to process) an application. Confidentiality is governed by 35 U.S.C. 122 and 37 CFR 1.14. This collection is estimated to take 12 minutes to complete, including gathering, preparing, and submitting the completed application form to the USPTO. Time will vary depending upon the individual case. Any comments on the amount of time you require to complete this form and/or suggestions for reducing this burden, should be sent to the Chief Information Officer, U.S. Patent and Trademark Office, U.S. Department of Commerce, P.O. Box 1450, Alexandria, VA 22313-1450. DO NOT SEND FEES OR COMPLETED FORMS TO THIS ADDRESS. **SEND TO: Commissioner for Patents, P.O. Box 1450, Alexandria, VA 22313-1450.**
If you need assistance in completing the form, call 1-800-PTO-9199 and select option 2.

UNITED STATES PATENT AND TRADEMARK OFFICE

UNITED STATES DEPARTMENT OF COMMERCE
United States Patent and Trademark Office
Address: COMMISSIONER FOR PATENTS
P.O. Box 1450
Alexandria, Virginia 22313-1450
www.uspto.gov

APPL NO.	FILING OR 371 (c) DATE	ART UNIT	FIL FEE REC'D	ATTY.DOCKET NO	DRAWINGS	TOT CLMS	IND CLMS
10/911,211	10/13/2004	2681	466	31	5	23	4

CONFIRMATION NO. 7409

Raman Rao
3099 Alexis Drive
Palo Alto, CA 94304

CORRECTED FILING RECEIPT

OC00000015708716

Date Mailed: 04/11/2005

Receipt is acknowledged of this regular Patent Application. It will be considered in its order and you will be notified as to the results of the examination. Be sure to provide the U.S. APPLICATION NUMBER, FILING DATE, NAME OF APPLICANT, and TITLE OF INVENTION when inquiring about this application. Fees transmitted by check or draft are subject to collection. Please verify the accuracy of the data presented on this receipt. **If an error is noted on this Filing Receipt, please mail to the Commissioner for Patents P.O. Box 1450 Alexandria Va 22313-1450. Please provide a copy of this Filing Receipt with the changes noted thereon. If you received a "Notice to File Missing Parts" for this application, please submit any corrections to this Filing Receipt with your reply to the Notice. When the USPTO processes the reply to the Notice, the USPTO will generate another Filing Receipt incorporating the requested corrections (if appropriate).**

Applicant(s)

~~Raman K. Rao~~, Palo Alto, CA; --Sanjay K. Rao--
Sunil K. Rao, Palo Alto, CA;
~~Sanjay K. Rao~~, Palo Alto, CA; --Raman K. Rao--

Power of Attorney: None

Domestic Priority data as claimed by applicant

This application is a DIV of 09/591,381 06/09/2000
which is a CIP of 09/281,739 06/04/1999 Pat No 6169789

Foreign Applications

If Required, Foreign Filing License Granted: 03/09/2005

The country code and number of your priority application, to be used for filing abroad under the Paris Convention, is US10/911,211

Projected Publication Date: Request for Non-Publication Acknowledged

Non-Publication Request: Yes

Early Publication Request: No

** SMALL ENTITY **

Title

~~Dynamically configurable IP based wireless device and wireless networks~~
Multifunction Mobile Devices and Appliance Control

Preliminary Class

455

LICENSE FOR FOREIGN FILING UNDER
Title 35, United States Code, Section 184
Title 37, Code of Federal Regulations, 5.11 & 5.15

GRANTED

The applicant has been granted a license under 35 U.S.C. 184, if the phrase "IF REQUIRED, FOREIGN FILING LICENSE GRANTED" followed by a date appears on this form. Such licenses are issued in all applications where the conditions for issuance of a license have been met, regardless of whether or not a license may be required as set forth in 37 CFR 5.15. The scope and limitations of this license are set forth in 37 CFR 5.15(a) unless an earlier license has been issued under 37 CFR 5.15(b). The license is subject to revocation upon written notification. The date indicated is the effective date of the license, unless an earlier license of similar scope has been granted under 37 CFR 5.13 or 5.14.

This license is to be retained by the licensee and may be used at any time on or after the effective date thereof unless it is revoked. This license is automatically transferred to any related applications(s) filed under 37 CFR 1.53(d). This license is not retroactive.

The grant of a license does not in any way lessen the responsibility of a licensee for the security of the subject matter as imposed by any Government contract or the provisions of existing laws relating to espionage and the national security or the export of technical data. Licensees should apprise themselves of current regulations especially with respect to certain countries, of other agencies, particularly the Office of Defense Trade Controls, Department of State (with respect to Arms, Munitions and Implements of War (22 CFR 121-128)); the Office of Export Administration, Department of Commerce (15 CFR 370.10 (j)); the Office of Foreign Assets Control, Department of Treasury (31 CFR Parts 500+) and the Department of Energy.

NOT GRANTED

No license under 35 U.S.C. 184 has been granted at this time, if the phrase "IF REQUIRED, FOREIGN FILING LICENSE GRANTED" DOES NOT appear on this form. Applicant may still petition for a license under 37 CFR 5.12, if a license is desired before the expiration of 6 months from the filing date of the application. If 6 months has lapsed from the filing date of this application and the licensee has not received any indication of a secrecy order under 35 U.S.C. 181, the licensee may foreign file the application pursuant to 37 CFR 5.15(b).

Electronic Patent Application Fee Transmittal

Application Number:	10911211
Filing Date:	13-Oct-2004
Title of Invention:	Multifunction Mobile Devices and Appliance Control
First Named Inventor/Applicant Name:	Raman K. Rao
Filer:	Johney U. Han/Quyen Nguyen
Attorney Docket Number:	IPHLNZ00501

Filed as Small Entity

Filing Fees for Utility under 35 USC 111(a)

Description	Fee Code	Quantity	Amount	Sub-Total in USD($)
Basic Filing:				
Pages:				
Claims:				
Miscellaneous-Filing:				
Petition:				
Pet. Delay Sub or Restore Priority-Claim	2454	1	850	850
Patent-Appeals-and-Interference:				
Post-Allowance-and-Post-Issuance:				

Description	Fee Code	Quantity	Amount	Sub-Total in USD($)
Extension-of-Time:				
Miscellaneous:				
			Total in USD ($)	**850**

Electronic Acknowledgement Receipt	
EFS ID:	23037189
Application Number:	10911211
International Application Number:	
Confirmation Number:	7409
Title of Invention:	Multifunction Mobile Devices and Appliance Control
First Named Inventor/Applicant Name:	Raman K. Rao
Customer Number:	40518
Filer:	Johney U. Han/Quyen Nguyen
Filer Authorized By:	Johney U. Han
Attorney Docket Number:	IPHLNZ00501
Receipt Date:	27-JUL-2015
Filing Date:	13-OCT-2004
Time Stamp:	19:10:17
Application Type:	Utility under 35 USC 111(a)

Payment information:

Submitted with Payment	yes
Payment Type	Credit Card
Payment was successfully received in RAM	$850
RAM confirmation Number	17780
Deposit Account	
Authorized User	
The Director of the USPTO is hereby authorized to charge indicated fees and credit any overpayment as follows:	

File Listing:

Document Number	Document Description	File Name	File Size(Bytes)/ Message Digest	Multi Part /.zip	Pages (if appl.)
1	Petition for review by the Office of Petitions	1_IPHLNZ00501_20150727_petition_delayed_priority_claim.pdf	1928818 225c3c45e287a657ab431ef54267f66afcf638c4	no	7
Warnings:					
Information:					
2	Application Data Sheet	2_IPHLNZ00501_20150727_corrected_ads.pdf	1590843 eae1a418e58e09ee5e0ce6425cb6f2c6f3cdbce9	no	7
Warnings:					
Information:					
This is not an USPTO supplied ADS fillable form					
3	Request for Corrected Filing Receipt	3_IPHLNZ00501_20150727_request_corrected_filing_receipt.pdf	526595 5d62886a6b86f6622015f942195c8cabd62f7000	no	3
Warnings:					
Information:					
4	Request for Corrected Filing Receipt	4_IPHLNZ00501_20150727_filing_receipt_marked_up.pdf	1011561 efab8b6c6c16bb4d91ebecdf645c082071dbbee8	no	2
Warnings:					
Information:					
5	Fee Worksheet (SB06)	fee-info.pdf	30640 9397702672fb9c07d0be467390b7e9445c332aa2	no	2
Warnings:					
Information:					
		Total Files Size (in bytes):	5088457		

This Acknowledgement Receipt evidences receipt on the noted date by the USPTO of the indicated documents, characterized by the applicant, and including page counts, where applicable. It serves as evidence of receipt similar to a Post Card, as described in MPEP 503.

New Applications Under 35 U.S.C. 111
If a new application is being filed and the application includes the necessary components for a filing date (see 37 CFR 1.53(b)-(d) and MPEP 506), a Filing Receipt (37 CFR 1.54) will be issued in due course and the date shown on this Acknowledgement Receipt will establish the filing date of the application.

National Stage of an International Application under 35 U.S.C. 371
If a timely submission to enter the national stage of an international application is compliant with the conditions of 35 U.S.C. 371 and other applicable requirements a Form PCT/DO/EO/903 indicating acceptance of the application as a national stage submission under 35 U.S.C. 371 will be issued in addition to the Filing Receipt, in due course.

New International Application Filed with the USPTO as a Receiving Office
If a new international application is being filed and the international application includes the necessary components for an international filing date (see PCT Article 11 and MPEP 1810), a Notification of the International Application Number and of the International Filing Date (Form PCT/RO/105) will be issued in due course, subject to prescriptions concerning national security, and the date shown on this Acknowledgement Receipt will establish the international filing date of the application.

I hereby certify that this correspondence is being electronically transmitted to the USPTO on the date shown below.

Date: July 27, 2015 Signature: /Quyen B. Nguyen/ (Quyen B. Nguyen)

IN THE UNITED STATES PATENT AND TRADEMARK OFFICE

Application No.:	10/911,211
Confirmation No.:	7409
Filing Date:	October 13, 2004
Inventor(s):	Sanjay K. Rao et al.
Title:	Multifunction Mobile Devices and Appliance Control (as amended)
Examiner:	Michael Irace
Group Art Unit:	2644

REQUEST FOR A CORRECTED FILING RECEIPT

Mail Stop Missing Parts
Commissioner for Patents
P.O. Box 1450
Alexandria, VA 22313-1450

Dear Sir or Madam:

Applicant hereby requests that a corrected Filing Receipt be issued in the above-captioned patent application. The inventorship order, title and domestic priority claim are updated as follows:

INVENTORSHIP ORDER

From: Raman K. Rao
Sunil K. Rao
Sanjay K. Rao

To: **--Sanjay K. Rao—**
Sunil K. Rao
--Raman K. Rao—

TITLE

Amendment submitted on November 6, 2014:

On page 1, please amend the title, as follows:

Multifunction Mobile Devices and Appliance Control ~~Dynamically Configurable IP Based Wireless Device and Wireless Networks~~

DOMESTIC PRIORITY DATA

Amendment submitted on November 6, 2014 and concurrently herewith:

On page 1 of the specification, please amend the paragraph beginning on line 9, as follows:

The present application is a divisional of U.S. Application No. 09/591,381 filed June 9, 2000 (now U.S. Patent No. 7,929,950) which is a continuation-in-part of copending application entitled INTELLIGENT KEYBOARD SYSTEM, Serial No. 09/281,739, filed June 4, 1999, (now U.S. Patent No. 6,169,789) which is a continuation-in-part application of a now abandoned application entitled A SYSTEM LEVEL SCHEME TO CONTROL INTELLIGENT APPLIANCES, Serial No. 08/764,903 filed December 16, 1996.

A Corrected Application Data Sheet and marked up Filing Receipt is being concurrently submitted via EFS-Web. Applicant additionally requests that all pertinent U.S. Patent and Trademark Office records relating to the subject application be changed to reflect this correction.

In the event the appropriate fee and/or petition is not filed herewith and the U.S. Patent and Trademark Office determines that an extension and/or other relief is required, Applicant petitions for any required relief including extensions of time and authorize the Commissioner to charge the cost of such petitions and/or other fees due in connection with this filing and all documents filed herewith to **Deposit Account No. 50-3973** referencing Attorney Docket No. **IPHLNZ00501**.

Respectfully submitted,

/Johney U. Han/

Johney U. Han
Registration No. 45,565

Customer No. 40518
Levine Bagade Han LLP
2400 Geng Road, Suite 120
Palo Alto, CA 94303
Direct: (650) 242-4217
Fax: (650) 284-2180

I hereby certify that this correspondence is being electronically transmitted to the USPTO on the date shown below.

Date: July 27, 2015 Signature: /Quyen B. Nguyen/ (Quyen B. Nguyen)

IN THE UNITED STATES PATENT AND TRADEMARK OFFICE

Application No.:	10/911,211
Confirmation No.:	7409
Filing Date:	October 13, 2004
Inventor(s):	Sanjay K. Rao et al.
Title:	Multifunction Mobile Devices and Appliance Control (as amended)
Examiner:	Michael Irace
Group Art Unit:	2644

PETITION TO ACCEPT AN UNINTENTIONALLY DELAYED CLAIM FOR PRIORITY UNDER 35 U.S.C. § 120 AND 37 C.F.R. 1.78(a)(2)

Mail Stop Petition
Commissioner for Patents
P.O. Box 1450
Alexandria, VA 22313-1450

Dear Sir or Madam:

Applicant hereby petitions for acceptance of an unintentionally delayed claim for priority. The entire delay between the date the claim was due under 37 C.F.R. 1.78(a)(2) and the date of the claim was unintentional.

On February 15, 2005, a Decision on Petition (copy enclosed) was mailed indicating "A proper claim for priority based on prior applications has not been filed." Although a subsequent Corrected Filing Receipt (copy enclosed) was mailed on April 11, 2005 indicating a divisional claim to U.S. Application No. 09/591,381 filed June 9, 2000, Applicant submits this petition to confirm correction of the file records.

Filed herewith is a Corrected Application Data Sheet and the fee set forth in § 1.17(t).

On page 1 of the specification, please amend the paragraph beginning on line 9, as follows:

The present application is a divisional of U.S. Application No. 09/591,381 filed June 9, 2000 (now U.S. Patent No. 7,929,950) which is a continuation-in-part of copending application entitled INTELLIGENT KEYBOARD SYSTEM, Serial No. 09/281,739, filed June 4, 1999, (now U.S. Patent No. 6,169,789) ~~which is a continuation-in-part application of a now abandoned application entitled A SYSTEM LEVEL SCHEME TO CONTROL INTELLIGENT APPLIANCES, Serial No. 08/764,903 filed December 16, 1996~~.

In the event the appropriate fee and/or petition is not filed herewith and the U.S. Patent and Trademark Office determines that an extension and/or other relief is required, Applicant petitions for any required relief including extensions of time and authorize the Commissioner to charge the cost of such petitions and/or other fees due in connection with this filing and all documents filed herewith to **Deposit Account No. 50-3973** referencing Attorney Docket No. **IPHLNZ00501**.

Respectfully submitted,

/Johney U. Han/

Johney U. Han
Registration No. 45,565

Customer No. 40518
Levine Bagade Han LLP
2400 Geng Road, Suite 120
Palo Alto, CA 94303
Direct: (650) 242-4217
Fax: (650) 284-2180

UNITED STATES PATENT AND TRADEMARK OFFICE

Commissioner for Patents
United States Patent and Trademark Office
P.O. Box 1450
Alexandria, VA 22313-1450
www.uspto.gov

Raman Rao
3099 Alexis Drive
Palo Alto, CA 94304

COPY MAILED

FEB 15 2005

OFFICE OF PETITIONS

In re Application of
Rao et al.
Application No. 10/911,211
Filed: October 13, 2004
For: Dynamically Configurable Wireless Devices

Decision on Petition

This is a decision in response to the paper filed October 13, 2004, which is being treated as a petition to accord the above-identified application a filing date of August 3, 2004.

The petition is **dismissed**.

Any request for reconsideration must be submitted within TWO (2) MONTHS from the mail date of this decision. No further petition fee is required for the request. Extensions of time under 37 CFR 1.136(a) are NOT permitted.

The merits of the petition can not be considered until the petition fee ($400) has been paid.

Normally, the decision could end at this point since the petition fee has not been paid. However, *as a courtesy*, further information will be given to petitioner.

Petitioner may wish to investigate the extent to which petitioner will be harmed, if harmed at all, if the application retains a filing date of October 13, 2004, rather than August 3, 2004,. The Office wishes to ensure petitioner does not spend an additional non-refundable $400 filing a new petition unless the risk and reward justify such a significant expense on the part of petitioner.

The costs of filing a renewed petition seeking a filing date of August 3, 2004

If a petition requesting an earlier filing date is filed and granted, petitioner will need to pay a total of $465. The total includes $400 for the petition and a surcharge based on the date the filing fee was submitted. A surcharge ($65 for a small entity) is necessary whenever the filing fee is paid on a date after the filing date. At the present time the filing fee is being paid on October 13, 2004, the same date as the filing date. However, the filing fee payment date would not be the same date as the filing date if the filing date were changed to August 3, 2004.

Petitioner should recognize that a renewed petition may not be granted. The transmittal page does contain an incorporation by reference statement. However, the page also states, with emphasis in the original, "The incorporation can only be relied upon when a portion has been inadvertently omitted from the submitted application parts." On August 3, 2004, petitioner submitted a page which states in part, "The original specification and drawings are not included." The issue will not be addressed further since a petition along with payment of the required fee has not been filed. Petitioner is reminded the $400 is non-refundable.

Applicant appears to desire to claim the benefit of an earlier filing date based on prior applications.

The transmittal sheet indicates the application is a divisional of application no. 09/591,381. On October 13, 2004, a specification was filed. The first sentence of the specification claims priority

based on two applications - 09/281,739 and 08/764,903. Specifically, the specification states the application is a continuation-in-part of application no. 09/281,739 which is a continuation-in-part of application no. 08/764,903.

Petitioner may wish determine if a filing date of October 13, 2004, rather than August 3, 2004, harms petitioner if both dates allow the instant application to claim benefit of an earlier filing date based on prior applications.

A proper claim for priority based on prior applications has not been filed.

In order for a non-provisional filed after November 29, 2000, one may not obtain the benefit of an another application's filing date unless a proper and timely claim has been made.

In order for the claim for priority to be proper, the claim must be made either in the first sentence of the specification or in an Application Data Sheet ("ADS"). A claim for priority based on application no. 09/591,381 appears neither in the specification or an ADS. The specification claims priority based on application no. 09/281,739. However, application no. 09/281,739 issued on January 2, 2001. In order to claim priority directly to application no. 09/281,739, the application would need a filing date prior to the date of issuance of a patent for application no. 09/281,739. A patent for application no. 09/281,739 issued on January 2, 2001.

Petitioner can amend the first sentence of the specification, but such an amendment will require the submission of a petition under 37 CFR 1.78.

A petition under 37 CFR 1.78 is necessary to amend the first sentence to include application no. 09/591,381 as part of the chain of applications because such an amendment was not filed by February 13, 2005. When an application is filed on or after November 29, 2000, benefit claims under 35 U.S.C. 119(e), 120, 121 and 365(c) must be made during the pendency of the application and within the later of four months from the actual filing date of the application or sixteen months from the filing date of the prior application. For the instant application, the above period of time ended on February 13, 2005. The priority claim at issue were not made by this date.

37 CFR 1.78(a)(3) states,

> If the reference required by 35 U.S.C. 120 and paragraph (a)(2) of this section is presented . . . after the time period provided by paragraph (a)(2)(ii) of this section, the claim . . . may be accepted if the reference identifying the prior-filed application . . . was unintentionally delayed. A petition to accept an unintentionally delayed claim under 35 U.S.C. 120, 121, or 365(c) for the benefit of a prior-filed application must be accompanied by:
>
> (i) The reference required by 35 U.S.C. 120 . . . unless previously submitted;
> (ii) The surcharge set forth in § 1.17(t); and
> (iii) A statement that the entire delay between the date the claim was due under paragraph (a)(2)(ii) of this section and the date the claim was filed was unintentional.

The fee required to be paid is the surcharge set forth in 37 CFR 1.17(t) which is $1,370.

Petitioner might want to consider the effect filing a new application would have on applicants' rights.

Petitioner might want to ask what harm might occur if a brand new application was filed, along with the filing fee of $150, search fee of $250, examination fee of $100, and with any other necessary fees. In filing a new application, petitioner could ensure the first sentence contained a

proper claim for priority and thereby ensure a petition under 37 CFR 1.78(a)(3) would not be necessary.

Summary:

Since the petition fee has not been paid, the full merits of the petition will not be considered and the petition is dismissed.

The Office of Initial Patent Examination will further process the application with a filing date of October 13, 2004, using the papers filed on August 3, 2004, and the papers filed on October 13, 2004.

Telephone inquiries should be directed to Petitions Attorney Steven Brantley at (571) 272-3203.

Charles Steven Brantley
Senior Petitions Attorney
Office of Petitions

UNITED STATES PATENT AND TRADEMARK OFFICE

UNITED STATES DEPARTMENT OF COMMERCE
United States Patent and Trademark Office
Address: COMMISSIONER FOR PATENTS
P.O. Box 1450
Alexandria, Virginia 22313-1450
www.uspto.gov

APPL NO.	FILING OR 371 (c) DATE	ART UNIT	FIL FEE REC'D	ATTY.DOCKET NO	DRAWINGS	TOT CLMS	IND CLMS
10/911,211	10/13/2004	2681	466	31	5	23	4

CONFIRMATION NO. 7409

Raman Rao
3099 Alexis Drive
Palo Alto, CA 94304

CORRECTED FILING RECEIPT

OC00000015706716

Date Mailed: 04/11/2005

Receipt is acknowledged of this regular Patent Application. It will be considered in its order and you will be notified as to the results of the examination. Be sure to provide the U.S. APPLICATION NUMBER, FILING DATE, NAME OF APPLICANT, and TITLE OF INVENTION when inquiring about this application. Fees transmitted by check or draft are subject to collection. Please verify the accuracy of the data presented on this receipt. **If an error is noted on this Filing Receipt, please mail to the Commissioner for Patents P.O. Box 1450 Alexandria Va 22313-1450. Please provide a copy of this Filing Receipt with the changes noted thereon. If you received a "Notice to File Missing Parts" for this application, please submit any corrections to this Filing Receipt with your reply to the Notice. When the USPTO processes the reply to the Notice, the USPTO will generate another Filing Receipt incorporating the requested corrections (if appropriate).**

Applicant(s)

Raman K. Rao, Palo Alto, CA;
Sunil K. Rao, Palo Alto, CA;
Sanjay K. Rao, Palo Alto, CA;

Power of Attorney: None

Domestic Priority data as claimed by applicant

This application is a DIV of 09/591,381 06/09/2000

Foreign Applications

If Required, Foreign Filing License Granted: 03/09/2005

The country code and number of your priority application, to be used for filing abroad under the Paris Convention, is US10/911,211

Projected Publication Date: Request for Non-Publication Acknowledged

Non-Publication Request: Yes

Early Publication Request: No

** SMALL ENTITY **

Title

Dynamically configurable IP based wireless device and wireless networks

Preliminary Class

455

LICENSE FOR FOREIGN FILING UNDER
Title 35, United States Code, Section 184
Title 37, Code of Federal Regulations, 5.11 & 5.15

GRANTED

The applicant has been granted a license under 35 U.S.C. 184, if the phrase "IF REQUIRED, FOREIGN FILING LICENSE GRANTED" followed by a date appears on this form. Such licenses are issued in all applications where the conditions for issuance of a license have been met, regardless of whether or not a license may be required as set forth in 37 CFR 5.15. The scope and limitations of this license are set forth in 37 CFR 5.15(a) unless an earlier license has been issued under 37 CFR 5.15(b). The license is subject to revocation upon written notification. The date indicated is the effective date of the license, unless an earlier license of similar scope has been granted under 37 CFR 5.13 or 5.14.

This license is to be retained by the licensee and may be used at any time on or after the effective date thereof unless it is revoked. This license is automatically transferred to any related applications(s) filed under 37 CFR 1.53(d). This license is not retroactive.

The grant of a license does not in any way lessen the responsibility of a licensee for the security of the subject matter as imposed by any Government contract or the provisions of existing laws relating to espionage and the national security or the export of technical data. Licensees should apprise themselves of current regulations especially with respect to certain countries, of other agencies, particularly the Office of Defense Trade Controls, Department of State (with respect to Arms, Munitions and Implements of War (22 CFR 121-128)); the Office of Export Administration, Department of Commerce (15 CFR 370.10 (j)); the Office of Foreign Assets Control, Department of Treasury (31 CFR Parts 500+) and the Department of Energy.

NOT GRANTED

No license under 35 U.S.C. 184 has been granted at this time, if the phrase "IF REQUIRED, FOREIGN FILING LICENSE GRANTED" DOES NOT appear on this form. Applicant may still petition for a license under 37 CFR 5.12, if a license is desired before the expiration of 6 months from the filing date of the application. If 6 months has lapsed from the filing date of this application and the licensee has not received any indication of a secrecy order under 35 U.S.C. 181, the licensee may foreign file the application pursuant to 37 CFR 5.15(b).

PTO/AIA/14 (12-13)
Approved for use through 01/31/2014. OMB 0651-0032
U.S. Patent and Trademark Office; U.S. DEPARTMENT OF COMMERCE
Under the Paperwork Reduction Act of 1995, no persons are required to respond to a collection of information unless it contains a valid OMB control number.

Application Data Sheet 37 CFR 1.76	Attorney Docket Number	IPHLNZ00501
	Application Number	10/911,211
Title of Invention	~~Dynamically configurable IP based wireless device and wireless networks~~ Multifunction Mobile Devices and Appliance Control	

The application data sheet is part of the provisional or nonprovisional application for which it is being submitted. The following form contains the bibliographic data arranged in a format specified by the United States Patent and Trademark Office as outlined in 37 CFR 1.76.
This document may be completed electronically and submitted to the Office in electronic format using the Electronic Filing System (EFS) or the document may be printed and included in a paper filed application.

Secrecy Order 37 CFR 5.2

☐ Portions or all of the application associated with this Application Data Sheet may fall under a Secrecy Order pursuant to 37 CFR 5.2 (Paper filers only. Applications that fall under Secrecy Order may not be filed electronically.)

Inventor Information:

Inventor 1 Remove

Legal Name

Prefix	Given Name	Middle Name	Family Name	Suffix
	~~Raman~~ Sanjay	K.	Rao	

Residence Information (Select One) ◉ US Residency ○ Non US Residency ○ Active US Military Service

City	Palo Alto	State/Province	CA	Country of Residence	US

Mailing Address of Inventor:

Address 1	3087 Alexis Drive		
Address 2			
City	Palo Alto	State/Province	CA
Postal Code	94304	Country	US

Inventor 2 Remove

Legal Name

Prefix	Given Name	Middle Name	Family Name	Suffix
	Sunil	K.	Rao	

Residence Information (Select One) ◉ US Residency ○ Non US Residency ○ Active US Military Service

City	Palo Alto	State/Province	CA	Country of Residence	US

Mailing Address of Inventor:

Address 1	3087 Alexis Drive		
Address 2			
City	Palo Alto	State/Province	CA
Postal Code	94304	Country	US

Inventor 3 Remove

Legal Name

Prefix	Given Name	Middle Name	Family Name	Suffix
	~~Sanjay~~ Raman	K.	Rao	

Residence Information (Select One) ◉ US Residency ○ Non US Residency ○ Active US Military Service

PTO/AIA/14 (12-13)
Approved for use through 01/31/2014. OMB 0651-0032
U.S. Patent and Trademark Office; U.S. DEPARTMENT OF COMMERCE
Under the Paperwork Reduction Act of 1995, no persons are required to respond to a collection of information unless it contains a valid OMB control number.

Application Data Sheet 37 CFR 1.76	Attorney Docket Number	IPHLNZ00501
	Application Number	10/911,211
Title of Invention	~~Dynamically configurable IP based wireless device and wireless networks~~ Multifunction Mobile Devices and Appliance Control	

City	Palo Alto	State/Province	CA	Country of Residence	US

Mailing Address of Inventor:

Address 1	3087 Alexis Drive		
Address 2			
City	Palo Alto	State/Province	CA
Postal Code	94304	Country	US

All Inventors Must Be Listed - Additional Inventor Information blocks may be generated within this form by selecting the **Add** button. Add

Correspondence Information:

Enter either Customer Number or complete the Correspondence Information section below.
For further information see 37 CFR 1.33(a).

☐ **An Address is being provided for the correspondence Information of this application.**

Customer Number	40518		
Email Address	Patent@LBHIP.com	Add Email	Remove Email

Application Information: Multifunction Mobile Devices and Appliance Control

Title of the Invention	~~Dynamically configurable IP based wireless device and wireless networks~~		
Attorney Docket Number	IPHLNZ00501	Small Entity Status Claimed	☒
Application Type	Nonprovisional		
Subject Matter	Utility		
Total Number of Drawing Sheets (if any)	5	Suggested Figure for Publication (if any)	

Filing By Reference :

Only compete this section when filing an application by reference under 35 U.S.C. 111(c) and 37 CFR 1.57(a). Do not complete this section if application papers including a specification and any drawings are being filed. Any domestic benefit or foreign priority information must be provided in the appropriate section(s) below (i.e., "Domestic Benefit/National Stage Information" and "Foreign Priority Information").

For the purposes of a filing date under 37 CFR 1.53(b), the description and any drawings of the present application are replaced by this reference to the previously filed application, subject to conditions and requirements of 37 CFR 1.57(a).

Application number of the previously filed application	Filing date (YYYY-MM-DD)	Intellectual Property Authority or Country

Publication Information:

☐ Request Early Publication (Fee required at time of Request 37 CFR 1.219)

☒ **Request Not to Publish.** I hereby request that the attached application not be published under 35 U.S.C. 122(b) and certify that the invention disclosed in the attached application **has not and will not** be the subject of an application filed in another country, or under a multilateral international agreement, that requires publication at eighteen months after filing.

PTO/AIA/14 (12-13)
Approved for use through 01/31/2014. OMB 0651-0032
U.S. Patent and Trademark Office; U.S. DEPARTMENT OF COMMERCE
Under the Paperwork Reduction Act of 1995, no persons are required to respond to a collection of information unless it contains a valid OMB control number.

Application Data Sheet 37 CFR 1.76	Attorney Docket Number	IPHLNZ00501
	Application Number	10/911,211
Title of Invention	~~Dynamically configurable IP based wireless device and wireless networks~~ Multifunction Mobile Devices and Appliance Control	

Representative Information:

Representative information should be provided for all practitioners having a power of attorney in the application. Providing this information in the Application Data Sheet does not constitute a power of attorney in the application (see 37 CFR 1.32).
Either enter Customer Number or complete the Representative Name section below. If both sections are completed the customer Number will be used for the Representative Information during processing.

Please Select One:	(●) Customer Number	( ) US Patent Practitioner	( ) Limited Recognition (37 CFR 11.9)
Customer Number	40518		

Domestic Benefit/National Stage Information:

This section allows for the applicant to either claim benefit under 35 U.S.C. 119(e), 120, 121, or 365(c) or indicate National Stage entry from a PCT application. Providing this information in the application data sheet constitutes the specific reference required by 35 U.S.C. 119(e) or 120, and 37 CFR 1.78.
When referring to the current application, please leave the application number blank.

Prior Application Status	Patented				Remove
Application Number	Continuity Type	Prior Application Number	Filing Date (YYYY-MM-DD)	Patent Number	Issue Date (YYYY-MM-DD)
	Division of	09591381	2000-06-09	7929950	2011-04-19
Prior Application Status	Patented				Remove
Application Number	Continuity Type	Prior Application Number	Filing Date (YYYY-MM-DD)	Patent Number	Issue Date (YYYY-MM-DD)
09591381	Continuation in part of	09281739	1999-06-04	6169789	2001-01-02

Additional Domestic Benefit/National Stage Data may be generated within this form by selecting the **Add** button.

Foreign Priority Information:

This section allows for the applicant to claim priority to a foreign application. Providing this information in the application data sheet constitutes the claim for priority as required by 35 U.S.C. 119(b) and 37 CFR 1.55(d). When priority is claimed to a foreign application that is eligible for retrieval under the priority document exchange program (PDX)[i] the information will be used by the Office to automatically attempt retrieval pursuant to 37 CFR 1.55(h)(1) and (2). Under the PDX program, applicant bears the ultimate responsibility for ensuring that a copy of the foreign application is received by the Office from the participating foreign intellectual property office, or a certified copy of the foreign priority application is filed, within the time period specified in 37 CFR 1.55(g)(1).

Remove

Application Number	Country[i]	Filing Date (YYYY-MM-DD)	Access Code[i] (if applicable)

Additional Foreign Priority Data may be generated within this form by selecting the **Add** button.

PTO/AIA/14 (12-13)
Approved for use through 01/31/2014. OMB 0651-0032
U.S. Patent and Trademark Office; U.S. DEPARTMENT OF COMMERCE
Under the Paperwork Reduction Act of 1995, no persons are required to respond to a collection of information unless it contains a valid OMB control number.

Application Data Sheet 37 CFR 1.76	Attorney Docket Number	IPHLNZ00501
	Application Number	10/911,211
Title of Invention	~~Dynamically configurable IP based wireless device and wireless networks~~ Multifunction Mobile Devices and Appliance Control	

Statement under 37 CFR 1.55 or 1.78 for AIA (First Inventor to File) Transition Applications

☐ This application (1) claims priority to or the benefit of an application filed before March 16, 2013 and (2) also contains, or contained at any time, a claim to a claimed invention that has an effective filing date on or after March 16, 2013.
NOTE: By providing this statement under 37 CFR 1.55 or 1.78, this application, with a filing date on or after March 16, 2013, will be examined under the first inventor to file provisions of the AIA.

Authorization to Permit Access:

☐ Authorization to Permit Access to the Instant Application by the Participating Offices

If checked, the undersigned hereby grants the USPTO authority to provide the European Patent Office (EPO), the Japan Patent Office (JPO), the Korean Intellectual Property Office (KIPO), the World Intellectual Property Office (WIPO), and any other intellectual property offices in which a foreign application claiming priority to the instant patent application is filed access to the instant patent application. See 37 CFR 1.14(c) and (h). This box should not be checked if the applicant does not wish the EPO, JPO, KIPO, WIPO, or other intellectual property office in which a foreign application claiming priority to the instant patent application is filed to have access to the instant patent application.

In accordance with 37 CFR 1.14(h)(3), access will be provided to a copy of the instant patent application with respect to: 1) the instant patent application-as-filed; 2) any foreign application to which the instant patent application claims priority under 35 U.S.C. 119(a)-(d) if a copy of the foreign application that satisfies the certified copy requirement of 37 CFR 1.55 has been filed in the instant patent application; and 3) any U.S. application-as-filed from which benefit is sought in the instant patent application.

In accordance with 37 CFR 1.14(c), access may be provided to information concerning the date o f filing this Authorization.

Applicant Information:

Providing assignment information in this section does not substitute for compliance with any requirement of part 3 of Title 37 of CFR to have an assignment recorded by the Office.

PTO/AIA/14 (12-13)
Approved for use through 01/31/2014. OMB 0651-0032
U.S. Patent and Trademark Office; U.S. DEPARTMENT OF COMMERCE
Under the Paperwork Reduction Act of 1995, no persons are required to respond to a collection of information unless it contains a valid OMB control number.

Application Data Sheet 37 CFR 1.76	Attorney Docket Number	IPHLNZ00501
	Application Number	10/911,211
Title of Invention	~~Dynamically configurable IP based wireless device and wireless networks~~ Multifunction Mobile Devices and Appliance Control	

Applicant 1

If the applicant is the inventor (or the remaining joint inventor or inventors under 37 CFR 1.45), this section should not be completed. The information to be provided in this section is the name and address of the legal representative who is the applicant under 37 CFR 1.43; or the name and address of the assignee, person to whom the inventor is under an obligation to assign the invention, or person who otherwise shows sufficient proprietary interest in the matter who is the applicant under 37 CFR 1.46. If the applicant is an applicant under 37 CFR 1.46 (assignee, person to whom the inventor is obligated to assign, or person who otherwise shows sufficient proprietary interest) together with one or more joint inventors, then the joint inventor or inventors who are also the applicant should be identified in this section.

Clear

◉ Assignee	○ Legal Representative under 35 U.S.C. 117	○ Joint Inventor
○ Person to whom the inventor is obligated to assign.	○ Person who shows sufficient proprietary interest	

If applicant is the legal representative, indicate the authority to file the patent application, the inventor is:

Name of the Deceased or Legally Incapacitated Inventor :

If the Applicant is an Organization check here. ☒

Organization Name	IP Holdings, Inc.

Mailing Address Information For Applicant:

Address 1	3087 Alexis Drive		
Address 2			
City	Palo Alto	**State/Province**	CA
Country	US	Postal Code	94304
Phone Number		Fax Number	
Email Address			

Additional Applicant Data may be generated within this form by selecting the Add button.

Assignee Information including Non-Applicant Assignee Information:

Providing assignment information in this section does not subsitute for compliance with any requirement of part 3 of Title 37 of CFR to have an assignment recorded by the Office.

Assignee 1

Complete this section if assignee information, including non-applicant assignee information, is desired to be included on the patent application publication . An assignee-applicant identified in the "Applicant Information" section will appear on the patent application publication as an applicant. For an assignee-applicant, complete this section only if identification as an assignee is also desired on the patent application publication.

If the Assignee or Non-Applicant Assignee is an Organization check here. ☒

PTO/AIA/14 (12-13)
Approved for use through 01/31/2014. OMB 0651-0032
U.S. Patent and Trademark Office; U.S. DEPARTMENT OF COMMERCE
Under the Paperwork Reduction Act of 1995, no persons are required to respond to a collection of information unless it contains a valid OMB control number.

Application Data Sheet 37 CFR 1.76	Attorney Docket Number	IPHLNZ00501
	Application Number	10/911,211
Title of Invention	~~Dynamically configurable IP based wireless device and wireless networks~~ Multifunction Mobile Devices and Appliance Control	

Organization Name	IP Holdings, Inc.		
Mailing Address Information For Assignee including Non-Applicant Assignee:			
Address 1	3087 Alexis Drive		
Address 2			
City	Palo Alto	**State/Province**	CA
Country i	US	Postal Code	94304
Phone Number		Fax Number	
Email Address			

Additional Assignee or Non-Applicant Assignee Data may be generated within this form by selecting the Add button.

Signature:

NOTE: This form must be signed in accordance with 37 CFR 1.33. See 37 CFR 1.4 for signature requirements and certifications.

Signature	/Johney U. Han/			Date (YYYY-MM-DD)	2015-07-27
First Name	Johney	Last Name	Han	Registration Number	45565

Additional Signature may be generated within this form by selecting the Add button.

This collection of information is required by 37 CFR 1.76. The information is required to obtain or retain a benefit by the public which is to file (and by the USPTO to process) an application. Confidentiality is governed by 35 U.S.C. 122 and 37 CFR 1.14. This collection is estimated to take 23 minutes to complete, including gathering, preparing, and submitting the completed application data sheet form to the USPTO. Time will vary depending upon the individual case. Any comments on the amount of time you require to complete this form and/or suggestions for reducing this burden, should be sent to the Chief Information Officer, U.S. Patent and Trademark Office, U.S. Department of Commerce, P.O. Box 1450, Alexandria, VA 22313-1450. DO NOT SEND FEES OR COMPLETED FORMS TO THIS ADDRESS. **SEND TO: Commissioner for Patents, P.O. Box 1450, Alexandria, VA 22313-1450.**

Privacy Act Statement

The Privacy Act of 1974 (P.L. 93-579) requires that you be given certain information in connection with your submission of the attached form related to a patent application or patent. Accordingly, pursuant to the requirements of the Act, please be advised that: (1) the general authority for the collection of this information is 35 U.S.C. 2(b)(2); (2) furnishing of the information solicited is voluntary; and (3) the principal purpose for which the information is used by the U.S. Patent and Trademark Office is to process and/or examine your submission related to a patent application or patent. If you do not furnish the requested information, the U.S. Patent and Trademark Office may not be able to process and/or examine your submission, which may result in termination of proceedings or abandonment of the application or expiration of the patent.

The information provided by you in this form will be subject to the following routine uses:

1. The information on this form will be treated confidentially to the extent allowed under the Freedom of Information Act (5 U.S.C. 552) and the Privacy Act (5 U.S.C. 552a). Records from this system of records may be disclosed to the Department of Justice to determine whether the Freedom of Information Act requires disclosure of these records.

2. A record from this system of records may be disclosed, as a routine use, in the course of presenting evidence to a court, magistrate, or administrative tribunal, including disclosures to opposing counsel in the course of settlement negotiations.

3. A record in this system of records may be disclosed, as a routine use, to a Member of Congress submitting a request involving an individual, to whom the record pertains, when the individual has requested assistance from the Member with respect to the subject matter of the record.

4. A record in this system of records may be disclosed, as a routine use, to a contractor of the Agency having need for the information in order to perform a contract. Recipients of information shall be required to comply with the requirements of the Privacy Act of 1974, as amended, pursuant to 5 U.S.C. 552a(m).

5. A record related to an International Application filed under the Patent Cooperation Treaty in this system of records may be disclosed, as a routine use, to the International Bureau of the World Intellectual Property Organization, pursuant to the Patent C o o p eration Treaty.

6. A record in this system of records may be disclosed, as a routine use, to another federal agency for purposes of National Security review (35 U.S.C. 181) and for review pursuant to the Atomic Energy Act (42 U.S.C. 218(c)).

7. A record from this system of records may be disclosed, as a routine use, to the Administrator, General Services, or his/her designee, during an inspection of records conducted by GSA as part of that agency's responsibility to recommend improvements in records management practices and programs, under authority of 44 U.S.C. 2904 and 2906. Such disclosure shall be made in accordance with the GSA regulations governing inspection of records for this purpose, and any other relevant (i.e., GSA or Commerce) directive. Such disclosure shall not be used to make determinations about individuals.

8. A record from this system of records may be disclosed, as a routine use, to the public after either publication of the application pursuant to 35 U.S.C. 122(b) or issuance of a patent pursuant to 35 U.S.C. 151. Further, a record may be disclosed, subject to the limitations of 37 CFR 1.14, as a routine use, to the public if the record was filed in an application which became abandoned or in which the proceedings were terminated and which application is referenced by either a published application, an application open to public inspections or an issued patent.

9. A record from this system of records may be disclosed, as a routine use, to a Federal, State, or local law enforcement agency, if the USPTO becomes aware of a violation or potential violation of law or regulation.

UNITED STATES PATENT AND TRADEMARK OFFICE

UNITED STATES DEPARTMENT OF COMMERCE
United States Patent and Trademark Office
Address: COMMISSIONER FOR PATENTS
P.O. Box 1450
Alexandria, Virginia 22313-1450
www.uspto.gov

APPLICATION NUMBER	FILING OR 371(C) DATE	FIRST NAMED APPLICANT	ATTY. DOCKET NO./TITLE
10/911,211	10/13/2004	Sanjay K. Rao	IPHLNZ00501

CONFIRMATION NO. 7409

40518
LEVINE BAGADE HAN LLP
2400 GENG ROAD, SUITE 120
PALO ALTO, CA 94303

IMPROPER CFR REQUEST

OC000000076676672

Date Mailed: 08/05/2015

RESPONSE TO REQUEST FOR CORRECTED FILING RECEIPT

Power of Attorney, Claims, Fees, System Limitations, and Miscellaneous

In response to your request for a corrected Filing Receipt, the Office is unable to comply with your request because:

- The correction that was requested cannot be made because the application was filed before the rule became effective.

Questions about the contents of this notice and the requirements it sets forth should be directed to the Office of Data Management, Application Assistance Unit, at **(571) 272-4000** or **(571) 272-4200** or **1-888-786-0101**.

/mmasfaw/

UNITED STATES PATENT AND TRADEMARK OFFICE

UNITED STATES DEPARTMENT OF COMMERCE
United States Patent and Trademark Office
Address: COMMISSIONER FOR PATENTS
P.O. Box 1450
Alexandria, Virginia 22313-1450
www.uspto.gov

APPLICATION NUMBER	FILING or 371(c) DATE	GRP ART UNIT	FIL FEE REC'D	ATTY.DOCKET.NO	TOT CLAIMS	IND CLAIMS
10/911,211	10/13/2004	2644	946	IPHLNZ00501	23	4

CONFIRMATION NO. 7409

CORRECTED FILING RECEIPT

40518
LEVINE BAGADE HAN LLP
2400 GENG ROAD, SUITE 120
PALO ALTO, CA 94303

OC000000078878874

Date Mailed: 08/05/2015

Receipt is acknowledged of this non-provisional patent application. The application will be taken up for examination in due course. Applicant will be notified as to the results of the examination. Any correspondence concerning the application must include the following identification information: the U.S. APPLICATION NUMBER, FILING DATE, NAME OF APPLICANT, and TITLE OF INVENTION. Fees transmitted by check or draft are subject to collection. Please verify the accuracy of the data presented on this receipt. **If an error is noted on this Filing Receipt, please submit a written request for a Filing Receipt Correction. Please provide a copy of this Filing Receipt with the changes noted thereon. If you received a "Notice to File Missing Parts" for this application, please submit any corrections to this Filing Receipt with your reply to the Notice. When the USPTO processes the reply to the Notice, the USPTO will generate another Filing Receipt incorporating the requested corrections**

Inventor(s)

Sanjay K. Rao, Palo Alto, CA;
Sunil K. Rao, Palo Alto, CA;
Raman K. Rao, Palo Alto, CA;

Applicant(s)

Sanjay K. Rao, Palo Alto, CA;
Sunil K. Rao, Palo Alto, CA;
Raman K. Rao, Palo Alto, CA;

Power of Attorney: The patent practitioners associated with Customer Number 40518

Domestic Priority data as claimed by applicant

This application is a DIV of 09/591,381 06/09/2000 PAT 7929950

Foreign Applications for which priority is claimed (You may be eligible to benefit from the **Patent Prosecution Highway** program at the USPTO. Please see http://www.uspto.gov for more information.) - None.
Foreign application information must be provided in an Application Data Sheet in order to constitute a claim to foreign priority. See 37 CFR 1.55 and 1.76.

If Required, Foreign Filing License Granted: 03/09/2005
The country code and number of your priority application, to be used for filing abroad under the Paris Convention, is **US 10/911,211**
Projected Publication Date: Request for Non-Publication Acknowledged
Non-Publication Request: Yes
Early Publication Request: No
** **SMALL ENTITY** **

Title

Multifunction Mobile Devices and Appliance Control

Preliminary Class

455

Statement under 37 CFR 1.55 or 1.78 for AIA (First Inventor to File) Transition Applications:

PROTECTING YOUR INVENTION OUTSIDE THE UNITED STATES

Since the rights granted by a U.S. patent extend only throughout the territory of the United States and have no effect in a foreign country, an inventor who wishes patent protection in another country must apply for a patent in a specific country or in regional patent offices. Applicants may wish to consider the filing of an international application under the Patent Cooperation Treaty (PCT). An international (PCT) application generally has the same effect as a regular national patent application in each PCT-member country. The PCT process **simplifies** the filing of patent applications on the same invention in member countries, but **does not result** in a grant of "an international patent" and does not eliminate the need of applicants to file additional documents and fees in countries where patent protection is desired.

Almost every country has its own patent law, and a person desiring a patent in a particular country must make an application for patent in that country in accordance with its particular laws. Since the laws of many countries differ in various respects from the patent law of the United States, applicants are advised to seek guidance from specific foreign countries to ensure that patent rights are not lost prematurely.

Applicants also are advised that in the case of inventions made in the United States, the Director of the USPTO must issue a license before applicants can apply for a patent in a foreign country. The filing of a U.S. patent application serves as a request for a foreign filing license. The application's filing receipt contains further information and guidance as to the status of applicant's license for foreign filing.

Applicants may wish to consult the USPTO booklet, "General Information Concerning Patents" (specifically, the section entitled "Treaties and Foreign Patents") for more information on timeframes and deadlines for filing foreign patent applications. The guide is available either by contacting the USPTO Contact Center at 800-786-9199, or it can be viewed on the USPTO website at http://www.uspto.gov/web/offices/pac/doc/general/index.html.

For information on preventing theft of your intellectual property (patents, trademarks and copyrights), you may wish to consult the U.S. Government website, http://www.stopfakes.gov. Part of a Department of Commerce initiative, this website includes self-help "toolkits" giving innovators guidance on how to protect intellectual property in specific countries such as China, Korea and Mexico. For questions regarding patent enforcement issues, applicants may call the U.S. Government hotline at 1-866-999-HALT (1-866-999-4258).

LICENSE FOR FOREIGN FILING UNDER

Title 35, United States Code, Section 184

Title 37, Code of Federal Regulations, 5.11 & 5.15

GRANTED

The applicant has been granted a license under 35 U.S.C. 184, if the phrase "IF REQUIRED, FOREIGN FILING LICENSE GRANTED" followed by a date appears on this form. Such licenses are issued in all applications where the conditions for issuance of a license have been met, regardless of whether or not a license may be required as set forth in 37 CFR 5.15. The scope and limitations of this license are set forth in 37 CFR 5.15(a) unless an earlier license has been issued under 37 CFR 5.15(b). The license is subject to revocation upon written notification. The date indicated is the effective date of the license, unless an earlier license of similar scope has been granted under 37 CFR 5.13 or 5.14.

This license is to be retained by the licensee and may be used at any time on or after the effective date thereof unless it is revoked. This license is automatically transferred to any related applications(s) filed under 37 CFR 1.53(d). This license is not retroactive.

The grant of a license does not in any way lessen the responsibility of a licensee for the security of the subject matter as imposed by any Government contract or the provisions of existing laws relating to espionage and the national security or the export of technical data. Licensees should apprise themselves of current regulations especially with respect to certain countries, of other agencies, particularly the Office of Defense Trade Controls, Department of State (with respect to Arms, Munitions and Implements of War (22 CFR 121-128)); the Bureau of Industry and Security, Department of Commerce (15 CFR parts 730-774); the Office of Foreign AssetsControl, Department of Treasury (31 CFR Parts 500+) and the Department of Energy.

NOT GRANTED

No license under 35 U.S.C. 184 has been granted at this time, if the phrase "IF REQUIRED, FOREIGN FILING LICENSE GRANTED" DOES NOT appear on this form. Applicant may still petition for a license under 37 CFR 5.12, if a license is desired before the expiration of 6 months from the filing date of the application. If 6 months has lapsed from the filing date of this application and the licensee has not received any indication of a secrecy order under 35 U.S.C. 181, the licensee may foreign file the application pursuant to 37 CFR 5.15(b).

SelectUSA

The United States represents the largest, most dynamic marketplace in the world and is an unparalleled location for business investment, innovation, and commercialization of new technologies. The U.S. offers tremendous resources and advantages for those who invest and manufacture goods here. Through SelectUSA, our nation works to promote and facilitate business investment. SelectUSA provides information assistance to the international investor community; serves as an ombudsman for existing and potential investors; advocates on behalf of U.S. cities, states, and regions competing for global investment; and counsels U.S. economic development organizations on investment attraction best practices. To learn more about why the United States is the best country in the world to develop technology, manufacture products, deliver services, and grow your business, visit http://www.SelectUSA.gov or call +1-202-482-6800.

UNITED STATES PATENT AND TRADEMARK OFFICE

UNITED STATES DEPARTMENT OF COMMERCE
United States Patent and Trademark Office
Address: COMMISSIONER FOR PATENTS
P.O. Box 1450
Alexandria, Virginia 22313-1450
www.uspto.gov

APPLICATION NUMBER	FILING or 371(c) DATE	GRP ART UNIT	FIL FEE REC'D	ATTY.DOCKET.NO	TOT CLAIMS	IND CLAIMS
10/911,211	10/13/2004	2644	946	IPHLNZ00501	23	4

CONFIRMATION NO. 7409

CORRECTED FILING RECEIPT

40518
LEVINE BAGADE HAN LLP
2400 GENG ROAD, SUITE 120
PALO ALTO, CA 94303

OC000000080687122

Date Mailed: 02/17/2016

Receipt is acknowledged of this non-provisional patent application. The application will be taken up for examination in due course. Applicant will be notified as to the results of the examination. Any correspondence concerning the application must include the following identification information: the U.S. APPLICATION NUMBER, FILING DATE, NAME OF APPLICANT, and TITLE OF INVENTION. Fees transmitted by check or draft are subject to collection. Please verify the accuracy of the data presented on this receipt. **If an error is noted on this Filing Receipt, please submit a written request for a Filing Receipt Correction. Please provide a copy of this Filing Receipt with the changes noted thereon. If you received a "Notice to File Missing Parts" for this application, please submit any corrections to this Filing Receipt with your reply to the Notice. When the USPTO processes the reply to the Notice, the USPTO will generate another Filing Receipt incorporating the requested corrections**

Inventor(s)

Sanjay K. Rao, Palo Alto, CA;
Sunil K. Rao, Palo Alto, CA;
Raman K. Rao, Palo Alto, CA;

Applicant(s)

Sanjay K. Rao, Palo Alto, CA;
Sunil K. Rao, Palo Alto, CA;
Raman K. Rao, Palo Alto, CA;

Power of Attorney: The patent practitioners associated with Customer Number 40518

Domestic Priority data as claimed by applicant

This application is a DIV of 09/591,381 06/09/2000 PAT 7929950
which is a CIP of 09/281,739 06/04/1999 PAT 6169789

Foreign Applications for which priority is claimed (You may be eligible to benefit from the **Patent Prosecution Highway** program at the USPTO. Please see http://www.uspto.gov for more information.) - None.
Foreign application information must be provided in an Application Data Sheet in order to constitute a claim to foreign priority. See 37 CFR 1.55 and 1.76.

Permission to Access Application via Priority Document Exchange: No

Permission to Access Search Results: No

Applicant may provide or rescind an authorization for access using Form PTO/SB/39 or Form PTO/SB/69 as appropriate.

If Required, Foreign Filing License Granted: 03/09/2005

The country code and number of your priority application, to be used for filing abroad under the Paris Convention, is **US 10/911,211**

Projected Publication Date: Request for Non-Publication Acknowledged

Non-Publication Request: Yes

Early Publication Request: No
**** SMALL ENTITY ****
Title

Multifunction Mobile Devices and Appliance Control

Preliminary Class

455

Statement under 37 CFR 1.55 or 1.78 for AIA (First Inventor to File) Transition Applications:

PROTECTING YOUR INVENTION OUTSIDE THE UNITED STATES

Since the rights granted by a U.S. patent extend only throughout the territory of the United States and have no effect in a foreign country, an inventor who wishes patent protection in another country must apply for a patent in a specific country or in regional patent offices. Applicants may wish to consider the filing of an international application under the Patent Cooperation Treaty (PCT). An international (PCT) application generally has the same effect as a regular national patent application in each PCT-member country. The PCT process **simplifies** the filing of patent applications on the same invention in member countries, but **does not result** in a grant of "an international patent" and does not eliminate the need of applicants to file additional documents and fees in countries where patent protection is desired.

Almost every country has its own patent law, and a person desiring a patent in a particular country must make an application for patent in that country in accordance with its particular laws. Since the laws of many countries differ in various respects from the patent law of the United States, applicants are advised to seek guidance from specific foreign countries to ensure that patent rights are not lost prematurely.

Applicants also are advised that in the case of inventions made in the United States, the Director of the USPTO must issue a license before applicants can apply for a patent in a foreign country. The filing of a U.S. patent application serves as a request for a foreign filing license. The application's filing receipt contains further information and guidance as to the status of applicant's license for foreign filing.

Applicants may wish to consult the USPTO booklet, "General Information Concerning Patents" (specifically, the section entitled "Treaties and Foreign Patents") for more information on timeframes and deadlines for filing foreign patent applications. The guide is available either by contacting the USPTO Contact Center at 800-786-9199, or it can be viewed on the USPTO website at http://www.uspto.gov/web/offices/pac/doc/general/index.html.

For information on preventing theft of your intellectual property (patents, trademarks and copyrights), you may wish to consult the U.S. Government website, http://www.stopfakes.gov. Part of a Department of Commerce initiative, this website includes self-help "toolkits" giving innovators guidance on how to protect intellectual property in specific countries such as China, Korea and Mexico. For questions regarding patent enforcement issues, applicants may call the U.S. Government hotline at 1-866-999-HALT (1-866-999-4258).

LICENSE FOR FOREIGN FILING UNDER

Title 35, United States Code, Section 184

Title 37, Code of Federal Regulations, 5.11 & 5.15

GRANTED

The applicant has been granted a license under 35 U.S.C. 184, if the phrase "IF REQUIRED, FOREIGN FILING LICENSE GRANTED" followed by a date appears on this form. Such licenses are issued in all applications where the conditions for issuance of a license have been met, regardless of whether or not a license may be required as set forth in 37 CFR 5.15. The scope and limitations of this license are set forth in 37 CFR 5.15(a) unless an earlier license has been issued under 37 CFR 5.15(b). The license is subject to revocation upon written notification. The date indicated is the effective date of the license, unless an earlier license of similar scope has been granted under 37 CFR 5.13 or 5.14.

This license is to be retained by the licensee and may be used at any time on or after the effective date thereof unless it is revoked. This license is automatically transferred to any related applications(s) filed under 37 CFR 1.53(d). This license is not retroactive.

The grant of a license does not in any way lessen the responsibility of a licensee for the security of the subject matter as imposed by any Government contract or the provisions of existing laws relating to espionage and the national security or the export of technical data. Licensees should apprise themselves of current regulations especially with respect to certain countries, of other agencies, particularly the Office of Defense Trade Controls, Department of State (with respect to Arms, Munitions and Implements of War (22 CFR 121-128)); the Bureau of Industry and Security, Department of Commerce (15 CFR parts 730-774); the Office of Foreign AssetsControl, Department of Treasury (31 CFR Parts 500+) and the Department of Energy.

NOT GRANTED

No license under 35 U.S.C. 184 has been granted at this time, if the phrase "IF REQUIRED, FOREIGN FILING LICENSE GRANTED" DOES NOT appear on this form. Applicant may still petition for a license under 37 CFR 5.12, if a license is desired before the expiration of 6 months from the filing date of the application. If 6 months has lapsed from the filing date of this application and the licensee has not received any indication of a secrecy order under 35 U.S.C. 181, the licensee may foreign file the application pursuant to 37 CFR 5.15(b).

SelectUSA

The United States represents the largest, most dynamic marketplace in the world and is an unparalleled location for business investment, innovation, and commercialization of new technologies. The U.S. offers tremendous resources and advantages for those who invest and manufacture goods here. Through SelectUSA, our nation works to promote and facilitate business investment. SelectUSA provides information assistance to the international investor community; serves as an ombudsman for existing and potential investors; advocates on behalf of U.S. cities, states, and regions competing for global investment; and counsels U.S. economic development organizations on investment attraction best practices. To learn more about why the United States is the best country in the world to develop technology, manufacture products, deliver services, and grow your business, visit http://www.SelectUSA.gov or call +1-202-482-6800.

Office of Petitions: Routing Sheet

Application No. 10/911,211

This application is being forwarded to your office for further processing. A decision has been rendered on a petition filed in this application.

- [X] **GRANTED**
- [ ] **DISMISSED**
- [ ] **DENIED**

Office of Petitions: Decision Count Sheet

Mailing Month: 2

Application No.: 10911211

10911211

For US serial numbers: enter number only, no slashes or commas. Ex: 10123456
For PCT: enter "51+single digit of year of filing+last 5 numbers", Ex. for PCT/US05/12345, enter 51512345

Deciding Official: Thornton-McLaughlin, Kenya

Count (1) - Palm Credit 10/911,211

Decision: GRANT

FINANCE WORK NEEDED
☐ Select Check Box for YES

GRANT

Decision Type: 535 - 37 CFR 1.78(a)(3) & (a)(6) UNINTENTIONAL DELAY

535

Notes:

Count (2)

Decision: n/a

FINANCE WORK NEEDED
☐ Select Check Box for YES

Decision Type: NONE

FALSE

Notes:

Count (3)

Decision: n/a

FINANCE WORK NEEDED
☐ Select Check Box for YES

Decision Type: NONE

Notes:

Initials of Approving Official (if required)

If more than 3 decisions, attach 2nd count sheet & mark this box ☐

Printed on: *2/17/2016*

Office of Petitions Internal Document - Ver. 5.0

UNITED STATES PATENT AND TRADEMARK OFFICE

UNITED STATES DEPARTMENT OF COMMERCE
United States Patent and Trademark Office
Address: COMMISSIONER FOR PATENTS
P.O. Box 1450
Alexandria, Virginia 22313-1450
www.uspto.gov

APPLICATION NUMBER	FILING or 371(c) DATE	GRP ART UNIT	FIL FEE REC'D	ATTY.DOCKET.NO	TOT CLAIMS	IND CLAIMS
10/911,211	10/13/2004	2644	946	IPHLNZ00501	23	4

CONFIRMATION NO. 7409

CORRECTED FILING RECEIPT

40518
LEVINE BAGADE HAN LLP
2400 GENG ROAD, SUITE 120
PALO ALTO, CA 94303

Date Mailed: 02/17/2016

Receipt is acknowledged of this non-provisional patent application. The application will be taken up for examination in due course. Applicant will be notified as to the results of the examination. Any correspondence concerning the application must include the following identification information: the U.S. APPLICATION NUMBER, FILING DATE, NAME OF APPLICANT, and TITLE OF INVENTION. Fees transmitted by check or draft are subject to collection. Please verify the accuracy of the data presented on this receipt. **If an error is noted on this Filing Receipt, please submit a written request for a Filing Receipt Correction. Please provide a copy of this Filing Receipt with the changes noted thereon. If you received a "Notice to File Missing Parts" for this application, please submit any corrections to this Filing Receipt with your reply to the Notice. When the USPTO processes the reply to the Notice, the USPTO will generate another Filing Receipt incorporating the requested corrections**

Inventor(s)

Sanjay K. Rao, Palo Alto, CA;
Sunil K. Rao, Palo Alto, CA;
Raman K. Rao, Palo Alto, CA;

Applicant(s)

Sanjay K. Rao, Palo Alto, CA;
Sunil K. Rao, Palo Alto, CA;
Raman K. Rao, Palo Alto, CA;

Power of Attorney: The patent practitioners associated with Customer Number 40518

Domestic Priority data as claimed by applicant

This application is a DIV of 09/591,381 06/09/2000 PAT 7929950
which is a CIP of 09/281,739 06/04/1999 PAT 6169789

Foreign Applications for which priority is claimed (You may be eligible to benefit from the **Patent Prosecution Highway** program at the USPTO. Please see http://www.uspto.gov for more information.) - None.
Foreign application information must be provided in an Application Data Sheet in order to constitute a claim to foreign priority. See 37 CFR 1.55 and 1.76.

Permission to Access Application via Priority Document Exchange: No

Permission to Access Search Results: No

Applicant may provide or rescind an authorization for access using Form PTO/SB/39 or Form PTO/SB/69 as appropriate.

If Required, Foreign Filing License Granted: 03/09/2005

The country code and number of your priority application, to be used for filing abroad under the Paris Convention, is **US 10/911,211**

Projected Publication Date: Request for Non-Publication Acknowledged

Non-Publication Request: Yes

Early Publication Request: No
** **SMALL ENTITY** **
Title

Multifunction Mobile Devices and Appliance Control

Preliminary Class

455

Statement under 37 CFR 1.55 or 1.78 for AIA (First Inventor to File) Transition Applications:

PROTECTING YOUR INVENTION OUTSIDE THE UNITED STATES

Since the rights granted by a U.S. patent extend only throughout the territory of the United States and have no effect in a foreign country, an inventor who wishes patent protection in another country must apply for a patent in a specific country or in regional patent offices. Applicants may wish to consider the filing of an international application under the Patent Cooperation Treaty (PCT). An international (PCT) application generally has the same effect as a regular national patent application in each PCT-member country. The PCT process **simplifies** the filing of patent applications on the same invention in member countries, but **does not result** in a grant of "an international patent" and does not eliminate the need of applicants to file additional documents and fees in countries where patent protection is desired.

Almost every country has its own patent law, and a person desiring a patent in a particular country must make an application for patent in that country in accordance with its particular laws. Since the laws of many countries differ in various respects from the patent law of the United States, applicants are advised to seek guidance from specific foreign countries to ensure that patent rights are not lost prematurely.

Applicants also are advised that in the case of inventions made in the United States, the Director of the USPTO must issue a license before applicants can apply for a patent in a foreign country. The filing of a U.S. patent application serves as a request for a foreign filing license. The application's filing receipt contains further information and guidance as to the status of applicant's license for foreign filing.

Applicants may wish to consult the USPTO booklet, "General Information Concerning Patents" (specifically, the section entitled "Treaties and Foreign Patents") for more information on timeframes and deadlines for filing foreign patent applications. The guide is available either by contacting the USPTO Contact Center at 800-786-9199, or it can be viewed on the USPTO website at http://www.uspto.gov/web/offices/pac/doc/general/index.html.

For information on preventing theft of your intellectual property (patents, trademarks and copyrights), you may wish to consult the U.S. Government website, http://www.stopfakes.gov. Part of a Department of Commerce initiative, this website includes self-help "toolkits" giving innovators guidance on how to protect intellectual property in specific countries such as China, Korea and Mexico. For questions regarding patent enforcement issues, applicants may call the U.S. Government hotline at 1-866-999-HALT (1-866-999-4258).

LICENSE FOR FOREIGN FILING UNDER

Title 35, United States Code, Section 184

Title 37, Code of Federal Regulations, 5.11 & 5.15

GRANTED

The applicant has been granted a license under 35 U.S.C. 184, if the phrase "IF REQUIRED, FOREIGN FILING LICENSE GRANTED" followed by a date appears on this form. Such licenses are issued in all applications where the conditions for issuance of a license have been met, regardless of whether or not a license may be required as set forth in 37 CFR 5.15. The scope and limitations of this license are set forth in 37 CFR 5.15(a) unless an earlier license has been issued under 37 CFR 5.15(b). The license is subject to revocation upon written notification. The date indicated is the effective date of the license, unless an earlier license of similar scope has been granted under 37 CFR 5.13 or 5.14.

This license is to be retained by the licensee and may be used at any time on or after the effective date thereof unless it is revoked. This license is automatically transferred to any related applications(s) filed under 37 CFR 1.53(d). This license is not retroactive.

The grant of a license does not in any way lessen the responsibility of a licensee for the security of the subject matter as imposed by any Government contract or the provisions of existing laws relating to espionage and the national security or the export of technical data. Licensees should apprise themselves of current regulations especially with respect to certain countries, of other agencies, particularly the Office of Defense Trade Controls, Department of State (with respect to Arms, Munitions and Implements of War (22 CFR 121-128)); the Bureau of Industry and Security, Department of Commerce (15 CFR parts 730-774); the Office of Foreign AssetsControl, Department of Treasury (31 CFR Parts 500+) and the Department of Energy.

NOT GRANTED

No license under 35 U.S.C. 184 has been granted at this time, if the phrase "IF REQUIRED, FOREIGN FILING LICENSE GRANTED" DOES NOT appear on this form. Applicant may still petition for a license under 37 CFR 5.12, if a license is desired before the expiration of 6 months from the filing date of the application. If 6 months has lapsed from the filing date of this application and the licensee has not received any indication of a secrecy order under 35 U.S.C. 181, the licensee may foreign file the application pursuant to 37 CFR 5.15(b).

SelectUSA

The United States represents the largest, most dynamic marketplace in the world and is an unparalleled location for business investment, innovation, and commercialization of new technologies. The U.S. offers tremendous resources and advantages for those who invest and manufacture goods here. Through SelectUSA, our nation works to promote and facilitate business investment. SelectUSA provides information assistance to the international investor community; serves as an ombudsman for existing and potential investors; advocates on behalf of U.S. cities, states, and regions competing for global investment; and counsels U.S. economic development organizations on investment attraction best practices. To learn more about why the United States is the best country in the world to develop technology, manufacture products, deliver services, and grow your business, visit http://www.SelectUSA.gov or call +1-202-482-6800.

UNITED STATES PATENT AND TRADEMARK OFFICE

UNITED STATES DEPARTMENT OF COMMERCE
United States Patent and Trademark Office
Address: COMMISSIONER FOR PATENTS
P.O. Box 1450
Alexandria, Virginia 22313-1450
www.uspto.gov

APPLICATION NO.	FILING DATE	FIRST NAMED INVENTOR	ATTORNEY DOCKET NO.	CONFIRMATION NO.
10/911,211	10/13/2004	Sanjay K. Rao	IPHLNZ00501	7409

40518 7590 02/18/2016
LEVINE BAGADE HAN LLP
2400 GENG ROAD, SUITE 120
PALO ALTO, CA 94303

EXAMINER	
PATEL, AJIT	

ART UNIT	PAPER NUMBER
2644	

MAIL DATE	DELIVERY MODE
02/18/2016	PAPER

Please find below and/or attached an Office communication concerning this application or proceeding.

The time period for reply, if any, is set in the attached communication.

UNITED STATES PATENT AND TRADEMARK OFFICE

Commissioner for Patents
United States Patent and Trademark Office
P.O. Box 1450
Alexandria, VA 22313-1450
www.uspto.gov

In re Application of	:	
Rao, et al.	:	
Application No. 10/911,211	:	ON PETITION
Filed: October 13, 2004	:	
Attorney Docket No. IPHLNZ00501	:	

This is a decision on the petition under 37 CFR 1.78(e) filed July 27, 2015, to accept an unintentionally delayed claim for the benefit of priority to the prior-filed non-provisional applications set forth in the Application Data Sheet filed concurrently with the instant petition.

The petition under 37 CFR 1.78(e) is **GRANTED**.

A petition for acceptance of a claim for late priority under 37 CFR 1.78(d) is only applicable to those applications filed on, or after, November 29, 2000. Further, the petition is appropriate only after the
expiration of the period specified in 37 CFR 1.78(d). In addition, the petition under 37 CFR 1.78(e) must be accompanied by:

1. the reference required by 35 U.S.C § 120 and paragraph (d)(2) to the prior-filed application, unless previously submitted;

2. the surcharge set forth in § 1.17(m), and

3. a statement that the entire delay between the date the claim was due under 37 CFR 1.78(d)(3) and the date the benefit claim was filed was unintentional. The Director may require additional information where there is a question whether the delay was unintentional.

The instant nonprovisional application was filed after November 29, 2000, and the claim herein for the benefit of priority to the prior-filed applications, is submitted after the expiration of the period specified in 37 CFR 1.78(d). Also, the reference to the prior filed applications was submitted during the pendency of the instant nonprovisional application for which the claim for benefit of priority is sought. See 35 U.S.C. § 120. Accordingly, having found that the instant petition for acceptance of an unintentionally delayed claim for benefit of priority under 35 U.S.C. § 120 to the prior-filed non-provisional applications satisfies the conditions of 37 CFR 1.78(e), the petition is granted.

The granting of the petition to accept the delayed benefit claim to the prior-filed applications under 37 CFR 1.78(e) should not be construed as meaning the instant application is entitled to the benefit of the prior-filed application. In order for the instant application to be entitled to the benefit of the prior-filed applications, all other requirements under 35 U.S.C. § 120 and 37 CFR 1.78 must be met. Similarly, the fact that the corrected Filing Receipt was mailed that includes the prior-filed applications should not be construed as meaning that applicant is entitled to the claim for benefit of priority to the prior-filed applications noted thereon. Accordingly, the

examiner will, in due course, consider this benefit claim and determine whether the instant application is entitled to the benefit of the earlier filing date.

A corrected Filing Receipt, which includes the priority claim to the prior-filed nonprovisional application is enclosed.

Any inquiries concerning this decision may be directed to Kenya A. McLaughlin, Attorney Advisor, at (571) 272-3222.

This matter is being referred to Technology Center GAU2644 for consideration by the examiner of whether the instant application is entitled to the benefit of the earlier filing date.

/Kenya A. McLaughlin/

Kenya A. McLaughlin

Attorney Advisor

Office of Petitions

Enclosure: Corrected Filing Receipt

Doc Code: PET.AUTO Document Description: Petition automatically granted by EFS-Web	PTO/SB/83 U.S. Patent and Trademark Office Department of Commerce

Electronic Petition Request	**REQUEST FOR WITHDRAWAL AS ATTORNEY OR AGENT AND CHANGE OF CORRESPONDENCE ADDRESS**
Application Number	10911211
Filing Date	13-Oct-2004
First Named Inventor	Sanjay Rao
Art Unit	2644
Examiner Name	AJIT PATEL
Attorney Docket Number	IPHLNZ00501
Title	Multifunction Mobile Devices and Appliance Control

◉ Please withdraw me as attorney or agent for the above identified patent application and the practitioners of record associated with Customer Number: 40518

The reason(s) for this request are those described in 37 CFR:

11.116(a)(3)

Certifications

☒ I/We have given reasonable notice to the client, prior to the expiration of the response period, that the practitioner(s) intend to withdraw from employment

☒ I/We have delivered to the client or a duly authorized representative of the client all papers and property (including funds) to which the client is entitled

☒ I/We have notified the client of any responses that may be due and the time frame within which the client must respond

Change the correspondence address and direct all future correspondence to:
The address of the first named inventor or assignee that has properly made itself of record pursuant to 37 CFR 3.71(for applications filed before September 16, 2012) or the applicant (for applications filed on or after September 16, 2012), associated with Customer Number: 105481

I am authorized to sign on behalf of myself and all withdrawing practitioners.

Signature	/Johney U Han/
Name	Johney U Han
Registration Number	45565

UNITED STATES PATENT AND TRADEMARK OFFICE

Commissioner for Patents
United States Patent and Trademark Office
P.O. Box 1450
Alexandria, VA 22313-1450
www.uspto.gov

Decision Date : February 18, 2016

In re Application of :

Sanjay Rao

Application No : 10911211

Filed : 13-Oct-2004

Attorney Docket No : IPHLNZ00501

DECISION ON REQUEST TO WITHDRAW AS ATTORNEY/AGENTOF RECORD

This is an electronic decision on the Request to Withdraw as attorney or agent of record under 37 CFR§ 1.36(b), filed February 18, 2016

The request is **APPROVED**

The request was signed by Johney U Han (registration no. 45565) on behalf of all attorneys/agents associated with Customer Number 40518 . All attorneys/agents associated with Customer Number 40518 have been withdrawn.

Since there are no remaining attorneys of record, all future communications from the Office will be directed to the first named inventor or assignee that has properly made itself of record pursuant to 37 CFR 3.71(for applications filed before September 16, 2012) or the applicant (for applications filed on or after September 16, 2012), with Customer number 105481 .

As a reminder, requester is required to inform the first named inventor or assignee that has properly made itself of record pursuant to 37 CFR 3.71 (for applications filed before September 16, 2012) or the applicant (for applications filed on or after September 16, 2012) of the electronically processed petition.

Telephone inquiries concerning this decision should be directed to the Patent Electronic Business Center (EBC) at 866-217-9197.

Office of Petitions

Electronic Acknowledgement Receipt

EFS ID:	24956177
Application Number:	10911211
International Application Number:	
Confirmation Number:	7409
Title of Invention:	Multifunction Mobile Devices and Appliance Control
First Named Inventor/Applicant Name:	Sanjay K. Rao
Customer Number:	40518
Filer:	Johney U. Han/Quyen Nguyen
Filer Authorized By:	Johney U. Han
Attorney Docket Number:	IPHLNZ00501
Receipt Date:	18-FEB-2016
Filing Date:	13-OCT-2004
Time Stamp:	17:39:19
Application Type:	Utility under 35 USC 111(a)

Payment information:

Submitted with Payment	no

File Listing:

Document Number	Document Description	File Name	File Size(Bytes)/ Message Digest	Multi Part /.zip	Pages (if appl.)
1	Petition automatically granted by EFS	petition-request.pdf	31475 26a7c98281215e1c7be6c92e7588b219b1dbbe9c	no	1
Warnings:					
Information:					

Total Files Size (in bytes):	31475

This Acknowledgement Receipt evidences receipt on the noted date by the USPTO of the indicated documents, characterized by the applicant, and including page counts, where applicable. It serves as evidence of receipt similar to a Post Card, as described in MPEP 503.

New Applications Under 35 U.S.C. 111
If a new application is being filed and the application includes the necessary components for a filing date (see 37 CFR 1.53(b)-(d) and MPEP 506), a Filing Receipt (37 CFR 1.54) will be issued in due course and the date shown on this Acknowledgement Receipt will establish the filing date of the application.

National Stage of an International Application under 35 U.S.C. 371
If a timely submission to enter the national stage of an international application is compliant with the conditions of 35 U.S.C. 371 and other applicable requirements a Form PCT/DO/EO/903 indicating acceptance of the application as a national stage submission under 35 U.S.C. 371 will be issued in addition to the Filing Receipt, in due course.

New International Application Filed with the USPTO as a Receiving Office
If a new international application is being filed and the international application includes the necessary components for an international filing date (see PCT Article 11 and MPEP 1810), a Notification of the International Application Number and of the International Filing Date (Form PCT/RO/105) will be issued in due course, subject to prescriptions concerning national security, and the date shown on this Acknowledgement Receipt will establish the international filing date of the application.

UNITED STATES PATENT AND TRADEMARK OFFICE

UNITED STATES DEPARTMENT OF COMMERCE
United States Patent and Trademark Office
Address: COMMISSIONER FOR PATENTS
P.O. Box 1450
Alexandria, Virginia 22313-1450
www.uspto.gov

APPLICATION NUMBER	FILING OR 371(C) DATE	FIRST NAMED APPLICANT	ATTY. DOCKET NO./TITLE
10/911,211	10/13/2004	Sanjay K. Rao	IPHLNZ00501

CONFIRMATION NO. 7409

40518
LEVINE BAGADE HAN LLP
2400 GENG ROAD, SUITE 120
PALO ALTO, CA 94303

POWER OF ATTORNEY NOTICE

OC000000080745317

Date Mailed: 02/19/2016

NOTICE REGARDING CHANGE OF POWER OF ATTORNEY

This is in response to the Power of Attorney filed 02/18/2016.

- The withdrawal as attorney in this application has been accepted. Future correspondence will be mailed to the new address of record. 37 CFR 1.33.

Questions about the contents of this notice and the requirements it sets forth should be directed to the Office of Data Management, Application Assistance Unit, at **(571) 272-4000** or **(571) 272-4200** or **1-888-786-0101**.

/eefswuser/

UNITED STATES PATENT AND TRADEMARK OFFICE

UNITED STATES DEPARTMENT OF COMMERCE
United States Patent and Trademark Office
Address: COMMISSIONER FOR PATENTS
P.O. Box 1450
Alexandria, Virginia 22313-1450
www.uspto.gov

APPLICATION NO.	FILING DATE	FIRST NAMED INVENTOR	ATTORNEY DOCKET NO.	CONFIRMATION NO.
10/911,211	10/13/2004	Sanjay K. Rao	IPHLNZ00501	7409

105481 7590 04/20/2016

Rekha Rao
3087 Alexis Drive
Palo Alto, CA 94304

EXAMINER	
PATEL, AJIT	

ART UNIT	PAPER NUMBER
2644	

MAIL DATE	DELIVERY MODE
04/20/2016	PAPER

Please find below and/or attached an Office communication concerning this application or proceeding.

The time period for reply, if any, is set in the attached communication.

Office Action Summary	Application No. 10/911,211	Applicant(s) RAO ET AL.	
	Examiner AJIT PATEL	Art Unit 2644	AIA (First Inventor to File) Status No

-- The MAILING DATE of this communication appears on the cover sheet with the correspondence address --

Period for Reply

A SHORTENED STATUTORY PERIOD FOR REPLY IS SET TO EXPIRE 3 MONTHS FROM THE MAILING DATE OF THIS COMMUNICATION.

- Extensions of time may be available under the provisions of 37 CFR 1.136(a). In no event, however, may a reply be timely filed after SIX (6) MONTHS from the mailing date of this communication.
- If NO period for reply is specified above, the maximum statutory period will apply and will expire SIX (6) MONTHS from the mailing date of this communication.
- Failure to reply within the set or extended period for reply will, by statute, cause the application to become ABANDONED (35 U.S.C. § 133). Any reply received by the Office later than three months after the mailing date of this communication, even if timely filed, may reduce any earned patent term adjustment. See 37 CFR 1.704(b).

Status

1)☒ Responsive to communication(s) filed on *RCE filed 11/6/2014*.

☐ A declaration(s)/affidavit(s) under **37 CFR 1.130(b)** was/were filed on _____.

2a)☐ This action is **FINAL**. 2b)☒ This action is non-final.

3)☐ An election was made by the applicant in response to a restriction requirement set forth during the interview on _____; the restriction requirement and election have been incorporated into this action.

4)☐ Since this application is in condition for allowance except for formal matters, prosecution as to the merits is closed in accordance with the practice under *Ex parte Quayle*, 1935 C.D. 11, 453 O.G. 213.

Disposition of Claims*

5)☒ Claim(s) *36,39-48,50-58,60-66 and 68-74* is/are pending in the application.

5a) Of the above claim(s) _____ is/are withdrawn from consideration.

6)☐ Claim(s) _____ is/are allowed.

7)☒ Claim(s) *36,39-48,50-58,60-66 and 68-74* is/are rejected.

8)☐ Claim(s) _____ is/are objected to.

9)☐ Claim(s) _____ are subject to restriction and/or election requirement.

* If any claims have been determined allowable, you may be eligible to benefit from the **Patent Prosecution Highway** program at a participating intellectual property office for the corresponding application. For more information, please see http://www.uspto.gov/patents/init_events/pph/index.jsp or send an inquiry to PPHfeedback@uspto.gov.

Application Papers

10)☐ The specification is objected to by the Examiner.

11)☐ The drawing(s) filed on _____ is/are: a)☐ accepted or b)☐ objected to by the Examiner.

Applicant may not request that any objection to the drawing(s) be held in abeyance. See 37 CFR 1.85(a).

Replacement drawing sheet(s) including the correction is required if the drawing(s) is objected to. See 37 CFR 1.121(d).

Priority under 35 U.S.C. § 119

12)☐ Acknowledgment is made of a claim for foreign priority under 35 U.S.C. § 119(a)-(d) or (f).

Certified copies:

a)☐ All b)☐ Some** c)☐ None of the:

1.☐ Certified copies of the priority documents have been received.

2.☐ Certified copies of the priority documents have been received in Application No. _____.

3.☐ Copies of the certified copies of the priority documents have been received in this National Stage application from the International Bureau (PCT Rule 17.2(a)).

** See the attached detailed Office action for a list of the certified copies not received.

Attachment(s)

1) ☐ Notice of References Cited (PTO-892)

2) ☐ Information Disclosure Statement(s) (PTO/SB/08a and/or PTO/SB/08b) Paper No(s)/Mail Date _____.

3) ☐ Interview Summary (PTO-413) Paper No(s)/Mail Date. _____ .

4) ☐ Other: _____.

1. The present application is being examined under the pre-AIA first to invent provisions.

2. In the event the determination of the status of the application as subject to AIA 35 U.S.C. 102 and 103 (or as subject to pre-AIA 35 U.S.C. 102 and 103) is incorrect, any correction of the statutory basis for the rejection will not be considered a new ground of rejection if the prior art relied upon, and the rationale supporting the rejection, would be the same under either status.

3. The following is a quotation of pre-AIA 35 U.S.C. 103(a) which forms the basis for all obviousness rejections set forth in this Office action:

> (a) A patent may not be obtained though the invention is not identically disclosed or described as set forth in section 102 of this title, if the differences between the subject matter sought to be patented and the prior art are such that the subject matter as a whole would have been obvious at the time the invention was made to a person having ordinary skill in the art to which said subject matter pertains. Patentability shall not be negatived by the manner in which the invention was made.

4. Claims 36, 41, are rejected under 35 U.S.C. 103(a) as being unpatentable over Ondeck (US 2002/0046083) in view of Bell (7,894,474).

With regard to Claim 41and 36, "A wireless electronic device or mobile device, the device comprising: a processor; a memory; a unit for wireless communication;" Ondeck discloses a wireless communication device with a processor (paragraph 20) "wherein the device connects to a server, wherein the device downloads a software application or a functional instruction set from the server," Ondeck discloses downloading a software application content from an internet server functions as a repository of software for the mobile device and as an exchange for software for mobile devices (paragraphs 20 and 32)

"wherein the software or the functional instruction set is configured to operate and control components of device hardware, wherein the device includes one or more functions of a cellular telephone, PDA, handheld computer, or multifunction communication device or combinations thereof, and wherein the software or the functional instruction set is associated with a user and the device stored in a profile." Ondeck discloses the software application is configured to control device hardware such as display, memory and processor to customize a PDA (paragraphs 20) wherein said software is associated with the user and device (paragraphs 19 and 25)

"wherein the wireless device is configured to download a plurality of software from the server" Ondeck discloses downloading a plurality of software application content from an internet server (paragraphs 20 and 32)

"wherein the server is configured to store software or functional instruction sets for a plurality of wireless devices and for a plurality of applications for the plurality of wireless devices, and" Ondeck discloses the server storing a plurality of functional software sets for download for applications of a target appliance (paragraph 32)

"wherein the device is capable of voice and data communication" and "wherein the mobile device identifies a set of software to be downloaded from the server"; Wherein the mobile device is configured to transmit and receive at a plurality of frequencies; Wherein the device is enable for wireless voice communication using a local area network; Wherein the device is enable for voice communication using cellular Ondeck does not explicitly disclose this.

In an analogous art, Bell discloses a user programmable device that downloads

application specific software via a user input and selection (Figure 10 and Column 6 lines 37-65). Wherein the mobile device may be incorporate cellular telephone functions (Figures 1 and 2 and Column 4 lines 25-35); Wherein the mobile device is configured to transmit and receive at a plurality of frequencies (line 15-21, col. 5 of Bell); Wherein the device is enable for wireless voice communication using a local area network (9 of fig. 1 of Bell) and Wherein the device is enable for voice communication using cellular (line 4-7 of col. 5 of Bell)

It would have been obvious to one of ordinary skill in the art at the time the invention was made to combine the system above with the teaching of a mobile phone selecting an application for download, using a plurality of frequencies, a local area network as taught by Bell. The motivation for such a combination is use of a known technique in an analogous art to allow the user to select the appropriate device via the phone and thereby increase compatibility to existing devices.

5. Claim 39,40, 42,44-46, 53-57,63-67, 72,74 are rejected under pre-AIA 35 U.S.C. 103(a) as being unpatentable over Ondeck (US 2002/0046083) in view of Bell (7,894,474) and Stenman et al (U.S.Pat. # 6,223,029).

With regard to Claims 39,74, "A system comprising: a remote server the server configured to store wireless devices software for a plurality of different functions or applications for use by a plurality of wireless devices, wherein the remote server stores in memory software or functional instructions sets for a wireless device, wherein the remote server sends to the wireless device software or functional instruction sets," Ondeck discloses a wireless communication device with a processor, wherein the

server sends the wireless device software for functional instruction sets (paragraphs 19-21)

"wherein the remote server stores profiles or other user specific information," Ondeck disclose a server storing profile information for specific users and devices (paragraphs 25 and 19)

"and wherein the wireless device includes one or more functions of a cellular telephone, PDA, handheld computer, or multi-function communication device or combinations thereof" . Ondeck discloses the software application is configured to control device hardware such as display, memory and processor to customize a PDA (paragraphs 20)

"wherein the wireless device is configured to download the software from the remote server using an Internet data network, wherein the software is configured for use by the wireless device" Ondeck discloses downloading a plurality of software application content from an internet server (paragraphs 20 and 32)

"wherein the software controls a plurality of hardware components on the wireless device and" Wherein the software controls a plurality of hardware components such as the display, processor ram etc. (paragraphs 20 and 32)"wherein the server is enabled to provide a plurality of software and instruction sets for control of the wireless device for receipt by the wireless device".

Ondeck discloses the server storing a plurality of functional software sets for download for applications of a target appliance to the wireless devices wherein the device is enabled with software to control and command intelligent appliance using a server wherein in the software includes macros for control of an appliance as claim in

39,74.(paragraph 32).

"wherein the one or more wireless devices are configured for voice and data communication," In an analogous art, Bell discloses a user programmable device that downloads application specific software via a user input and selection (Figure 10 and Column 6 lines 37-65). Wherein the mobile device may be incorporate cellular telephone functions and thus voice communication (Figures 1 and 2 and Column 4 lines 25-35)

It would have been obvious to one of ordinary skill in the art at the time the invention was made to combine the system above with the teaching of a mobile phone selecting an application for download as taught by Bell. The motivation for such a combination is use of a known technique in an analogous art to allow the user to select the appropriate device via the phone and thereby increase compatibility to existing devices.

Ondeck and Bell does disclose the wireless device is enabled to control one or more appliances using control signal but not using a voice command. Stenman et al disclose the wireless mobile device which can be used to control one or more appliances using voice command (line 48-55, col. 7). Therefore, it would have been obvious to one skilled in the art to use the teaching of Stenman et al in the system of Ondeck and Bell for providing the mobile station with dual functionalities such that it is able to provide normal telephony functions and act as a remote control unit for a variety of peripheral devices accessible through some type of local area communication system or related communication system.

With regard to Claim 42, wherein the device downloads an application to function as a remote control for one or more devices including a television". Bell discloses that the device is configured to directly communicate with the TV as a remote (Figure 4 and Column 5 lines 60- column 6 lines 15)

With regard to Claims 53 and 63, wherein the server is collocated with a wireless carrier. Bell discloses the server being collocated in the wireless network carrier (Figure 1)

With regard to Claims 54 and 64, wherein the server is collocated with a wireless hardware vendor. Onedeck discloses that the seller of the device may customize upgrade the device's software via a server (paragraphs 19-21)

With regard to Claims 55 and 65, wherein the server is collocated with an office network. Onedeck discloses that the server may be collocated in an office network (paragraphs 19-21)

With regard to Claims 57 and 72, wherein responsive to a request from the one or more wireless device to a website or URL associated with a website server or a network environment, the one or more wireless device receives an indicator of a software application to be downloaded from the remote server" Bell discloses downloading application software via a URL or website link associated with a remote server for programming a device (Column 8 lines 60 through column 9 lines 10 see also Column 4 lines 25-35)

With regard to Claim 40, wherein the profiles contain information for both a user and the wireless device." Ondeck discloses sending profile information including

information identifying the user and the equipment (paragraphs 19,

25)

With regards to Claims 48 and 70, wherein the download of the software is based on a hierarchy of network paths. Bell discloses downloading of said software based on a hierarchy of network paths (Column 4 lines 25-35 and Figure 3).

6. Claims 43-46,73 are rejected under pre-AIA 35 U.S.C. 103(a) as being unpatentable over Onddeck and Bell in view of Minnett (GB 2294563)

With regard to Claim 43, "A system comprising a wireless device or mobile device including functions of one or more of a cellular telephone. PDA, handheld computer, or multifunction communication device or combinations thereof, the wireless device configured to receive a non-transitory computer readable medium from a server located at a remote location separate from the wireless device, the server confirmed to store a plurality of different application software or functional instructions for a plurality of wireless devices, one of the software application a non-transitory computer readable storage medium for a wireless device comprising:" Ondeck discloses the software application is configured to control device hardware such as display, memory and processor to customize a PDA (paragraphs 20) wherein said software is associated with the user and device (paragraphs 19 and 25) and a server separate from the device (Figure 1 item 208 see also item 206) wherein that server stores customization of software (Figure 1, paragraph 32)

" an application software to be run by a processor the wireless device" Ondeck

discloses the software application is configured to control device hardware such as display, memory and processor to customize a PDA (paragraphs 20)

Wherein the wireless device obtains from the server a plurality of software for the control of a plurality of home appliances (para. 32 of Ondeck)

"Wherein the wireless device is in further communication with a television configured to receive wireless commands over a network wherein the wireless device is configured to send a request the television, wherein the request comprises a control function for the television"; wherein the device operates using a plurality of frequencies. Ondeck does not explicitly disclose this.

Bell discloses that the device is configured to directly communicate with the TV as a remote (Figure 4 and Column 5 lines 60- column 6 lines 15) and wherein the device operates using a plurality of frequencies (line 15-21, col. 5 of Bell)

It would have been obvious to one of ordinary skill in the art at the time the invention was made to combine the system above with the teaching of a mobile phone selecting a channel as a remote and wherein the device operates using a plurality of frequencies as taught by Bell. The motivation for such a combination is use of a known technique in an analogous art to allow the user to change the channel of the television via a programmable remote and thus increasing compatibility to existing systems.

"Wherein the wireless device is configured to send said commands using a local home IP network, and wherein the communication between the television made the wireless device is over a IP based network as part of a home network". In an analogous art, Minett discloses sending commands from a remote to a TV via a wireless LAN

connection of a home network (Page 1 lines 17-22) wherein said remote may be a PDA with phone capabilities (page 5 lines 10-20).

It would have been obvious to one of ordinary skill in the art at the time the invention was made to combine the system above with the teaching of using WLAN connections. The motivation for such a combination is use of a known technique in an analogous art to substitute known protocols for wireless communications.

Ondeck, Bell and Minett do not specifically disclose voice actuated command use in a wireless to control appliances. Stenman et al disclose the wireless mobile device which can be used to control one or more appliances using voice actuated command (line 48-55, col. 7). Therefore, it would have been obvious to one skilled in the art to use the teaching of Stenman et al in the system of Ondeck ,Bell and Minett for providing the mobile station with dual functionalities such that it is able to provide normal telephony functions and act as a remote control unit for a variety of peripheral devices accessible through some type of local area communication system or related communication system.

With regard to Claims 44, wherein the wireless device is configured to communicate directly to the television. Bell discloses that the device is configured to directly communicate with the TV as a remote (Figure 4 and Column 5 lines 60- column 6 lines 15)

With regard to Claims 45 and 46, wherein the wireless device is configured to communicate a set of commands over a network to a network switch box over a wireless local area network, and wherein the network switch box is configured to

transmit said commands to a television. Bell disclose that said commands can be sent to a networked box that is communication with the TV or home entertainment center (Figure 4 and Column 5 lines 60- column 6 lines 15)

7. Claim 51 and 61 are rejected under 35 U.S.C. 103(a) as being unpatentable over Ondeck (US 2002/0046083) and Bell in further view of King (6,308,083)

With regard to Claims 51 and 61, wherein the mobile device is configured to download an application for controlling a garage door opener. Ondeck nor Bell do not explicitly disclose this.

However, programmable garage door openers are well known in the art and shown by King in figure 1 and Column 2 lines 60-65.

It would have been obvious to one of ordinary skill in the art at the time the invention was made to combine the multi-function programmable devices of Bell and Ondeck with the teaching of programming a multifunction device to be a garage door opener as taught by King. The motivation for such a combination is use of known technique in an analogous art to increase capability of a multifunction device.

8. Claim 47,52, 62 and 69 are rejected under 35 U.S.C. 103(a) as being unpatentable over Ondeck (US 2002/0046083) and Bell in further view of Mattaway (US 6,131,121)

With regard to Claims 47,52, 62 and 69, wherein the device is configured to function as an internet protocol IP phone". Bell discloses function as a phone using

WAP and other protocols but does not explicitly disclose an IP phone.
However, using the phone with an alternative protocol such as internet protocol is well known in the art and shown by Mattaway (Figures 3 and 5 and appropriate text).
It would have been obvious to one of ordinary skill in the art at the time the invention was made to combine the system above with the teaching of using an IP protocol as taught by Mattaway. The motivation for such a combination is use of known alternative protocol

9. Claim 49, 59 and 67 are rejected under 35 U.S.C. 103(a) as being unpatentable over Ondeck (US 2002/0046083) and Bell in further view of Engbersen (US 6,341,304)

With regards to Claims 49, 59 and 67, wherein the device is configured to queue various software applications for downloading at a later time in response to the type of network bandwidth. Ondeck and bell do not explicitly disclose this.
However, queuing downloads for later when there is limited bandwidth is well known in the art and described in Engbersen (Figure 3 and appropriate text)
It would have been obvious to one of ordinary skill in the art at the time the invention was made to combine the system above with of saving downloads for later if bandwidth is limited or not available The motivation for such a combination is use of known technique in an analogous art to improve efficient use of bandwidth.

10. Claim 58, 68 and 71 are rejected under 35 U.S.C. 103(a) as being unpatentable over Ondeck (US 2002/0046083) and Bell in further view of Lee (US 8,670,405)

With regard to Claims 58, 68 and 71, wherein the server delivers content not when device is in a carrier domain. Neither Bell nor Ondeck explicitly disclose this.
Lee discloses coupling multiple networks to a mobile PC and waiting or holding a download until a faster/cheaper connection takes place (Figure 12 and Column 3 lines 50 through Column 4 line 16).
It would have been obvious to one of ordinary skill in the art at the time the invention was made to combine the system above with the teaching of selecting a preferred network for QoS specific tasks. The motivation for such a combination is use of a known technique in an analogous art to decrease cost/time to the user for downloads.

11. Claim 50, 60 and 71 are rejected under 35 U.S.C. 103(a) as being unpatentable over Ondeck (US 2002/0046083) and Bell in further view of Kretschman (US 6,67464)

With regard to Claims 50 and 60,71, wherein the device is configured with GPS for location sensing and uses location to determine when to download a software application data and from which server to download the application. Ondeck and Bell do not explicitly disclose this.
Kretschmann discloses a mobile device that downloads an application from a specific server based on the location of the device using GPS signals (abstract, Column 3 line 8-10 Column 7 fine12-30 see also Claim 14 item III).
It would have been obvious to one of ordinary skill in the art at the time the invention was made to combine the system above with the teaching of downloading appfication specific tasks based on location of the unit as disclosed by Kretschmann. The

motivation for such a combination is use of a known technique in an analogous art to reuse the same device for location specific tasks.

12. Claim 56 and 66 are rejected under 35 U.S.C. 103(a) as being unpatentable over Ondeck (US 2002/0046083) and Bell in further view of Wood (US 6,453,127)

With regard to Claims 56 and 66, wherein the mobile device serves as a remote controller for controlling office appliances or copier.

However, programmable garage door openers are well known in the art and shown by Wood (abstract and Figure 3).

It would have been obvious to one of ordinary skill in the art at the time the invention was made to combine the multi-function programmable devices of Bell and Ondeck with the teaching of programming a multifunction device to be appliances or a copier as taught by Wood. The motivation for such a combination is use of known technique in an analogous art to increase capability of a multifunction device.

10. Applicant's arguments filed 11/6/14 have been fully considered but they are not persuasive. The applicant argues that the references of Ondeck, Bell , Engbersen used in 103 rejection cannot be applied since the instant application claimed priority date June 4, 1999. Examiner respectfully disagrees with the applicant in that the instant application has priority date of June 9, 2000 (which a continuation -in-part- of co-pending application filed June 4, 1999). Therefore, applicant is requested to provide the support of all claim limitations in application which a continuation -in-part- of co-pending application filed June 4, 1999 so that examiner can consider June 4, 1999 instead of

June 9, 2000. Applicant further argues that Ondeck fails to teach a system for downloading of software to the device where the software control the device. Examiner respectfully disagrees with the applicant. Ondeck clearly discloses in para. 0032 that the wireless device is used to download the software program to control the target device. The applicant further argues that Ondeck fails to disclose the wireless device is enabled to communicate on a plurality of frequencies. Bell clearly disclose in line 15-21, col. 5 wherein the mobile device is configured to transmit and receive at a plurality of frequencies. Applicant further argues that Minnett fail to disclose sending command over an IP based network. Examiner respectfully disagrees with the applicant in that Minnett does disclose sending commands from a remote to a TV via a wireless LAN connection of a home network (Page 1 lines 17-22) wherein said remote may be a PDA with phone capabilities (page 5 lines 10-20). Applicant argues that the Engbersen fails to disclose hierarchy of different networks. However, that limitation has been canceled in the amendment.

11. Any inquiry concerning this communication or earlier communications from the examiner should be directed to AJIT PATEL whose telephone number is (571)272-3140. The examiner can normally be reached on MON-FRI.

If attempts to reach the examiner by telephone are unsuccessful, the examiner's supervisor, Patrick Edouard can be reached on 571-272-7603. The fax phone number for the organization where this application or proceeding is assigned is 571-273-8300.

Information regarding the status of an application may be obtained from the Patent Application Information Retrieval (PAIR) system. Status information for published applications may be obtained from either Private PAIR or Public PAIR. Status information for unpublished applications is available through Private PAIR only. For more information about the PAIR system, see http://pair-direct.uspto.gov. Should you have questions on access to the Private PAIR system, contact the Electronic Business Center (EBC) at 866-217-9197 (toll-free). If you would like assistance from a USPTO Customer Service Representative or access to the automated information system, call 800-786-9199 (IN USA OR CANADA) or 571-272-1000.

/AJIT PATEL/
Primary Examiner, Art Unit 2644

Search Notes	Application/Control No.	Applicant(s)/Patent Under Reexamination
	10911211	RAO ET AL.
	Examiner	Art Unit
	DAVID WANG	2617

CPC- SEARCHED		
Symbol	Date	Examiner

CPC COMBINATION SETS - SEARCHED		
Symbol	Date	Examiner

US CLASSIFICATION SEARCHED			
Class	Subclass	Date	Examiner
455	461	3/14/2008	DW
709	221	3/14/2008	DW
710	104	3/14/2008	DW

SEARCH NOTES		
Search Notes	Date	Examiner
please see attached	3/14/2008	DW
consulted Duc Nguyen SPE regarding the use of the Logitech Harmony remote controller	3/11/2008	DW
google search for "(buy OR purchase) applications from mobile phone"	12/3/2010	DW
google search for "finding network with GPS location" and "(detecting OR sensing) (home OR office OR work) environment GPS"	12/9/2010	DW
consulted Huy Phan	12/9/2010	DW
Search East see attached.		
Updated search	4/17/2016	AP

INTERFERENCE SEARCH			
US Class/ CPC Symbol	US Subclass / CPC Group	Date	Examiner

Index of Claims	Application/Control No.	Applicant(s)/Patent Under Reexamination
	10911211	RAO ET AL.
	Examiner	Art Unit
	DAVID WANG	2617

✓	Rejected	-	Cancelled	N	Non-Elected	A	Appeal
=	Allowed	÷	Restricted	I	Interference	O	Objected

☐ Claims renumbered in the same order as presented by applicant ☐ CPA ☐ T.D. ☐ R.1.47

CLAIM		DATE								
Final	Original	03/14/2008	12/09/2010	09/21/2011	06/12/2013	05/03/2014	04/17/2016			
	1	-	-	-	-	-				
	2	-	-	-	-	-				
	3	-	-	-	-	-				
	4	-	-	-	-	-				
	5	-	-	-	-	-				
	6	-	-	-	-	-				
	7	-	-	-	-	-				
	8	-	-	-	-	-				
	9	-	-	-	-	-				
	10	-	-	-	-	-				
	11	-	-	-	-	-				
	12	-	-	-	-	-				
	13	-	-	-	-	-				
	14	-	-	-	-	-				
	15	-	-	-	-	-				
	16	-	-	-	-	-				
	17	-	-	-	-	-				
	18	-	-	-	-	-				
	19	-	-	-	-	-				
	20	-	-	-	-	-				
	21	-	-	-	-	-				
	22	-	-	-	-	-				
	23	-	-	-	-	-				
	24	-	-	-	-	-				
	25	-	-	-	-	-				
	26	-	-	-	-	-				
	27	-	-	-	-	-				
	28	-	-	-	-	-				
	29	-	-	-	-	-				
	30	-	-	-	-	-				
	31	-	-	-	-	-				
	32	-	-	-	-	-				
	33	-	-	-	-	-				
	34	-	-	-	-	-				
	35	-	-	-	-	-				
	36	✓	✓	✓	✓	✓	✓			

Index of Claims	Application/Control No.	Applicant(s)/Patent Under Reexamination
	10911211	RAO ET AL.
	Examiner	Art Unit
	DAVID WANG	2617

✓	Rejected	-	Cancelled	N	Non-Elected	A	Appeal
=	Allowed	÷	Restricted	I	Interference	O	Objected

☐ Claims renumbered in the same order as presented by applicant ☐ CPA ☐ T.D. ☐ R.1.47

CLAIM		DATE								
Final	Original	03/14/2008	12/09/2010	09/21/2011	06/12/2013	05/03/2014	04/17/2016			
	37	✓	✓	✓	-	-				
	38		✓	✓	-	-				
	39				✓	✓	✓			
	40				✓	✓	✓			
	41				✓	✓	✓			
	42				✓	✓	✓			
	43				✓	✓	✓			
	44					✓	✓			
	45					✓	✓			
	46					✓	✓			
	47					✓	✓			
	48					✓	✓			
	49					✓				
	50					✓	✓			
	51					✓	✓			
	52					✓	✓			
	53					✓	✓			
	54					✓	✓			
	55					✓	✓			
	56					✓	✓			
	57					✓	✓			
	58					✓	✓			
	59					✓				
	60					✓	✓			
	61					✓	✓			
	62					✓	✓			
	63					✓	✓			
	64					✓	✓			
	65					✓	✓			
	66					✓	✓			
	67					✓				
	68					✓	✓			
	69					✓	✓			
	70					✓	✓			
	71					✓	✓			
	72					✓	✓			

Index of Claims	Application/Control No.	Applicant(s)/Patent Under Reexamination
	10911211	RAO ET AL.
	Examiner	Art Unit
	DAVID WANG	2617

✓	Rejected	-	Cancelled	N	Non-Elected	A	Appeal
=	Allowed	÷	Restricted	I	Interference	O	Objected

☐ Claims renumbered in the same order as presented by applicant ☐ CPA ☐ T.D. ☐ R.1.47

CLAIM		DATE								
Final	Original	03/14/2008	12/09/2010	09/21/2011	06/12/2013	05/03/2014	04/17/2016			
	73						✓			
	74						✓			

I hereby certify that this correspondence is being electronically transmitted to the USPTO on the date shown below.
Date: 10/20/2016 Signature: /Sanjay K. Rao/ (Sanjay K. Rao)

IN THE UNITED STATES PATENT AND TRADEMARK OFFICE

Application No.:	10/911,211
Confirmation No.:	7409
Filing Date:	October 13, 2004
Inventor(s):	Raman K. Rao et al.
Title:	Multifunction Mobile Device and Appliance Control
Examiner:	Ajit Patel
Group Art Unit:	2644

RESPONSE TO NON FINAL OFFICE ACTION

Mail Stop Amendments
Commissioner for Patents
P.O. Box 1450
Alexandria, VA 22313-1450

Sir:

This is in response to the non final Office Action dated April 20, 2016 for which a response was due on July, 2016. Filed herewith is a Petition and fee for a 3 month extension of time, thereby extending the deadline for response to October 20, 2016. Accordingly, this response is timely filed. Reconsideration and allowance of the pending claims, as amended, in light of the Remarks presented herein are respectfully requested.

Amendments to the Claims are reflected in the listing of claims which begins on page 2 of this paper.

Remarks begin on page * of this paper.

AMENDMENTS TO THE CLAIMS

This listing of claims will replace all prior versions, and listings, of claims in the application:

In the claims

1.-35. (Canceled).

36. (Currently Amended): A method for a mobile device using a server, the method comprising:

providing a server a server that software for use by the mobile device;

accepting an upload of software to a server configured for use by a plurality of mobile devices and further configured to provide a plurality of different software functions to mobile devices;

~~storing data on the server, the data comprising a plurality of functional instruction sets, software, or mobile device configuration software which is configured to operate and control components of mobile device hardware, wherein said server is at a remote location from the one or more mobile devices, and wherein the server is enabled with Internet Protocol connectivity;~~

configuring the server to be used for by the one or more mobile devices, such that the server functions as a repository of software for the mobile device and as an exchange for software for mobile devices;

configuring the one or more mobile devices to use the server to download the software using a configuration setting;

wherein the mobile device remotely requests software from the server using a wireless network,

wherein the server stores in a storage medium an association of the software with the mobile device and a user profile,

~~wherein the mobile device downloads software or a functional instruction set from the server using a wireless communication unit;~~

~~wherein the mobile device stores the software or the functional instruction set in a storage medium, and~~

wherein the mobile device includes one or more functions of a cellular telephone, PDA, handheld computer, or multifunction communication device, or combinations thereof, and

~~wherein a processor of the mobile device is configured to execute the software so as to control the hardware of the mobile device;~~ and wherein the mobile device is configured to transmit and receive at a plurality of frequencies[[.]]

wherein the mobile device is dynamically software reconfigurable for the various environments;

wherein the mobile device is enabled to obtain a signal to noise ratio;

wherein the mobile device is enabled to be tuned to transmit and/or receive frequencies including one or more primary values and subsidiary values;

wherein the mobile device transmitter and receiver are independently tunable to one or more frequencies for operation in different environments based on the instructions of internal controller electronics and/or that of the server;

wherein the mobile device dynamically changes its frequency for communication; wherein the mobile device uses a power level for an operating environment;

and wherein both power output and channel bandwidth as are dynamically changed in real time.

37.-38. (Canceled).

39. (Currently Amended): A system comprising:

a remote server, the server configured to store wireless device software for a plurality of different functions or applications for use by a plurality of wireless devices,

wherein the remote server stores in memory software or functional instructions sets for a wireless device,

wherein the remote server sends to the wireless device software or functional instruction sets,

wherein the remote server stores profiles of user specific information,

wherein the wireless device is enabled for voice and data communication,

wherein the wireless device includes one or more functions of a cellular telephone, PDA, handheld computer, or multifunction communication device, or combinations thereof,

wherein the wireless device is configured to download the software from the remote server using an Internet protocol,

wherein the software is configured for use by the wireless device,

~~wherein the software controls a plurality of hardware components on the wireless device,~~ and wherein the mobile device is configured to transmit and receive at a plurality of frequencies;

wherein the mobile device is enabled to be tuned to transmit and/or receive frequencies including one or more primary values and subsidiary values;

wherein the mobile device transmitter and receiver are independently tunable to one or more frequencies for operation in different environments based on the instructions of internal controller electronics and/or that of the server;

wherein the mobile device dynamically changes its frequency for communication; wherein the mobile device uses a power level for an operating environment;

and wherein both power output and channel bandwidth as are dynamically changed in real time.

~~wherein the server is enabled to provide a plurality of software and instruction sets for control of the wireless device for receipt by the wireless device wherein the device is enabled with software to control and command intelligent appliance using a server.~~

~~wherein said software includes macros for control of an appliance; and wherein the wireless device is enabled to control one or more appliances using a voice command~~.

40. (Previously presented): The system of claim 39, wherein the profiles contain information for both a user and the wireless device.

41. (Currently Amended): A wireless electronic device or mobile device, the device comprising:

a processor;

a memory;

a unit for wireless communication;

wherein the device is capable of voice and data communication,

wherein the device connects to a server,

wherein the device includes one or more functions of a cellular telephone, PDA, handheld computer, or multifunction communication device, or combinations thereof,

wherein the software is associated with a user and the device stored in a profile,

wherein the server is configured to store software for a plurality of wireless devices and for a plurality of applications for the plurality of wireless devices, and wherein the device is enabled to communicate on a plurality of frequencies; wherein the device is enabled for voice and data communication; and wherein the device is enabled for voice communication using cellular and wherein the device is enabled for wireless voice communication using a local area network[[.]]

wherein the mobile device dynamically software reconfigurable for the various environments; wherein the mobile device is enabled to be tuned to transmit and/or receive frequencies including one or more primary values and subsidiary values; wherein the mobile device dynamically changes its frequency for communication; wherein the mobile device uses a power level for an operating environment; and wherein both power output and channel bandwidth as are dynamically changed in real time.

42. (Previously Presented): The device of claim 40, wherein the device downloads an application to function as a remote control for one or more devices including a television.

43. (Currently Amended): A system comprising:

a wireless device or mobile device including functions of one or more of a cellular telephone, PDA, handheld computer, or multifunction communication device or combinations thereof, the wireless device configured to receive a non-transitory computer

readable medium from a server located at a remote location separate from the wireless device, the server configured to store a plurality of different application software or functional instructions for a plurality of wireless devices, one of the software application including a non-transitory computer readable storage medium for a wireless device comprising:

an application software to be run by a processor on the wireless device,

wherein the wireless device is in further communication with a television configured to receive wireless commands over a network,

wherein the wireless device is configured to send a request to the television,

wherein the request comprises a control function for the television,

wherein the wireless device is configured to send said commands using a local home IP network, and

wherein the communication between the television and the wireless device is over a IP based network as part of a home network; and wherein the wireless device obtains from the server a plurality of software for the control of a plurality of home appliances; and wherein commands to the control the one or more appliances are voice actuated based on input to the wireless device; and wherein the device operates using a plurality of frequencies; and wherein the wireless device is enabled to be tuned to transmit and/or receive frequencies including one or more primary values and subsidiary values; wherein the wireless device dynamically changes its frequency for communication; wherein the wireless device uses a various power level for an operating environment.

44. (Previously presented): The system of claim 43, wherein the wireless device is configured to communicate directly to the television.

45. (Previously presented): The system of claim 43, wherein the wireless device is configured to communicate a set of commands to a server, the server configured to communicate said commands to the television.

46. (Previously presented): The system of claim 43, wherein the wireless device is configured to communicate a set of commands over a network to a network switch box over a wireless local area network, and wherein the network switch box is configured to transmit said commands to a television.

47. (Previously presented): The system of claims 36, wherein the server provides software for the configuration of the mobile or wireless device as an IP telephone.

48. (Previously presented): The system of claims 36, wherein the download of the software is based on a hierarchy of network paths.

49. (Previously presented): The system of claims 36, wherein the device is configured to queue various software applications for downloading at a later time in response to the type of network bandwidth.

50. (Previously presented): The system of claims 36, wherein the device is configured for location sensing through use of both GPS and the location of network box and reconfigures one or more parameters based on the location.

51. (Previously presented): The system of claims 36, wherein the mobile device is configured to download an application for controlling a garage door opener.

52. (Previously presented): The system of claims 36, wherein the mobile device is configured to function as an internet protocol IP phone.

53. (Previously presented): The system of claims 36, wherein the server is colocated with a wireless carrier.

54. (Previously presented): The system of claims 36, further in communication with a network box is for use in a home environment.

55. (Previously presented): The system of claims 36, wherein the server is colocated with an office network.

56. (Previously presented): The system of claims 36, wherein the mobile device. serves as a remote controller for controlling intelligent office appliances.

57. (Previously presented): The system of claims 39, wherein responsive to a request from the one or more wireless device to a website or URL associated with a website server or a network environment, the one or more wireless device receives an indicator of a software application to be downloaded from the remote server,

58. (Previously presented): The system of claims 57, wherein the server delivers content not when device is in a carrier domain,

59. (Previously presented): The system of claims 39, wherein the device is configured to queue various software application content for downloading at a later time in response to a set of networks available and a configuration associated with the networks.

60. (Previously presented): The system of claims 39, wherein the device determines a more precise location using both GPS location and a network box location.

61. (Previously presented): The system of claims 39, wherein the device is configured to download an application for controlling a garage door opener.

62. (Previously presented): The system of claims 39, wherein the device is configured to function as an internet protocol IP phone.

63. (Previously presented): The system of claims 39, wherein the server is collocated with a wireless carrier.

64. (Previously presented): The system of claims 39, further in communication with a network box for for use in a home.

65. (Previously presented): The system of claims 39, wherein the server is colocated with an office network.

66. (Previously presented): The system of claims 39, wherein the wireless device uses a command to a control a copier.

67. (Previously presented): The system of claims 41, wherein the device is configured to queue various software application content for downloading at a later time in response to a set of networks available and a configuration associated with the networks.

68. (Previously presented): The system of claim 41, wherein the server delivers content not when device is in a carrier domain

69. (Previously presented): The system of claim 41, wherein the server provides software for the configuration of the mobile or wireless device as an IP (Internet Protocol) telephone.

70. (Previously presented): The system of claim 41, wherein the download of the application is based on a hierarchy of network paths.

71. (Previously presented): The system of claim 41, wherein the download from the server to the device is in a watchdog state and inactive.

72. (Previously presented): The system of claim 41, wherein the download of the software is based on a request to a URL associated with a server.

73. (Previously Presented): The system of claim 41, wherein a home server functions to controls a plurality of home intelligent appliances.

74. (Previously Presented): The system of claim 41, wherein the device communicates to a home server commands including starting and stopping an operation at a desired time, and wherein the home server controls one or more home intelligent appliances.

Ex.1002
APPLE INC. / Page 516 of 610

REMARKS

Claims 36,39-48,50-58,60-66,and 68-74 were pending in the present application. By virtue of this response, claims 36, 39, 41,43 have been amended. Accordingly, claims 36,39-48,50-58,60-66,and 68-74 are currently under consideration.

Amendment and cancellation of certain claims is not to be construed as a dedication to the public of any of the subject matter of the claims as previously presented. No new matter has been added.

Rejections under 35 U.S.C. §103

The *Office* has entered in a plurality of rejections under 35 U.S.C. §103 which are largely summarized below. Applicants have amended the claims merely to advance prosecution.

A. Claims 36, 41 are rejected under pre-AIA 35 U.S.C. 103 (a) as allegedly being unpatentable over Ondeck (2002/0046083) in view of Bell (7,894,474).

B. Claims 39,40,42,44-46,53-57,63,-67, 72, and 74 are rejected under pre-AIA 35 U.S.C. 103 (a) as allegedly being unpatentable over Ondeck (2002/0046083) in view of Bell (7,894,474) and Stenman (6,223,029).

C. Claims 43-46,73 are rejected under pre-AIA 35 U.S.C. 103 (a) as allegedly being unpatentable over Ondeck (2002/0046083) in view of Bell (7,894,474) in view of Minnett (GB 2294563).

D. Claims 51 and 61 are rejected under pre-AIA 35 U.S.C. 103 (a) as allegedly being unpatentable over Ondeck (2002/0046083) in view of Bell (7,894,474) in view of King (6,308,083).

E. Claims 47,52,62, and 69 are rejected under pre-AIA 35 U.S.C. 103 (a) as allegedly being unpatentable over Ondeck (2002/0046083) in view of Bell (7,894,474) in view of Mattaway (US 6,131,121).

F. Claims 49,69, and 67 are rejected under pre-AIA 35 U.S.C. 103 (a) as allegedly being unpatentable over Ondeck (2002/0046083) in view of Bell (7,894,474) in view of Engbersen (US 6,341,304).

G. Claims 58,68,and 71 are rejected under pre-AIA 35 U.S.C. 103 (a) as allegedly being unpatentable over Ondeck (2002/0046083) in view of Bell (7,894,474) in view of Lee (US 8,670,405).

H. Claims 50, 60, and 71 are rejected under pre-AIA 35 U.S.C. 103 (a) as allegedly being unpatentable over Ondeck (2002/0046083) in view of Bell (7,894,474) in view of Kretschman (6,674,464).

I. Claims 56 and 66 are rejected under pre-AIA 35 U.S.C. 103 (a) as allegedly being unpatentable over Ondeck (2002/0046083) in view of Bell (7,894,474) in view of Wood (6,453,127).

Applicants have made various amendments to the claims so as to allow the wireless device to provide various enhanced transmit and receive capabilities. None of the cited art anticipates the existing and nor as amended claims.

CONCLUSION

In view of the above, each of the presently pending claims in this application is believed to be in condition for allowance. Accordingly, the Examiner is respectfully requested to withdraw the outstanding rejections and pass this application to issue. If it is determined that a telephone conference would expedite the prosecution of this application, the Examiner is invited to telephone the undersigned at the number given below.

Respectfully submitted,

/Sanjay K. Rao/

Joint-Inventor

/Rekha K. Rao/

Legal Representative for Joint-Inventor, Raman K. Rao

/Rekha K. Rao/

Assignee, c/o IP Holdings, Inc.

PTO/SB/22 (03-13)
Approved for use through 3/31/2013. OMB 0651-0031
U.S. Patent and Trademark Office; U.S. DEPARTMENT OF COMMERCE
Under the Paperwork Reduction Act of 1995, no persons are required to respond to a collection of information unless it displays a valid OMB control number.

PETITION FOR EXTENSION OF TIME UNDER 37 CFR 1.136(a)	Docket Number (Optional) Z005.01
Application Number 10/911,211	Filed October 13, 2004
For Multifunction Mobile Device and Appliance Control	
Art Unit 2644	Examiner Ajit Patel

This is a request under the provisions of 37 CFR 1.136(a) to extend the period for filing a reply in the above-identified application.

The requested extension and fee are as follows (check time period desired and enter the appropriate fee below):

	Fee	Small Entity Fee	Micro Entity Fee	
☐ One month (37 CFR 1.17(a)(1))	$200	$100	$50	$
☐ Two months (37 CFR 1.17(a)(2))	$600	$300	$150	$
☑ Three months (37 CFR 1.17(a)(3))	$1,400	$700	$350	$ 700
☐ Four months (37 CFR 1.17(a)(4))	$2,200	$1,100	$550	$
☐ Five months (37 CFR 1.17(a)(5))	$3,000	$1,500	$750	$

☑ Applicant asserts small entity status. See 37 CFR 1.27.

☐ Applicant certifies micro entity status. See 37 CFR 1.29.
Form PTO/SB/15A or B or equivalent must either be enclosed or have been submitted previously.

☐ A check in the amount of the fee is enclosed.

☑ Payment by credit card. Form PTO-2038 is attached.

☐ The Director has already been authorized to charge fees in this application to a Deposit Account.

☐ The Director is hereby authorized to charge any fees which may be required, or credit any overpayment, to Deposit Account Number _____.

☐ Payment made via EFS-Web.

WARNING: Information on this form may become public. Credit card information should not be included on this form. Provide credit card information and authorization on PTO-2038.

I am the

☑ applicant/inventor.

☐ assignee of record of the entire interest. See 37 CFR 3.71. 37 CFR 3.73(b) statement is enclosed (Form PTO/SB/96).

☐ attorney or agent of record. Registration number _____.

☐ attorney or agent acting under 37 CFR 1.34. Registration number _____.

/Sanjay K. Rao/	October 20, 2016
Signature	Date
Sanjay Rao	
Typed or printed name	Telephone Number

NOTE: This form must be signed in accordance with 37 CFR 1.33. See 37 CFR 1.4 for signature requirements and certifications. Submit multiple forms if more than one signature is required, see below*.

☑ * Total of 3 forms are submitted.

This collection of information is required by 37 CFR 1.136(a). The information is required to obtain or retain a benefit by the public, which is to file (and by the USPTO to process) an application. Confidentiality is governed by 35 U.S.C. 122 and 37 CFR 1.11 and 1.14. This collection is estimated to take 6 minutes to complete, including gathering, preparing, and submitting the completed application form to the USPTO. Time will vary depending upon the individual case. Any comments on the amount of time you require to complete this form and/or suggestions for reducing this burden should be sent to the Chief Information Officer, U.S. Patent and Trademark Office, U.S. Department of Commerce, P.O. Box 1450, Alexandria, VA 22313-1450. DO NOT SEND FEES OR COMPLETED FORMS TO THIS ADDRESS. **SEND TO: Commissioner for Patents, P.O. Box 1450, Alexandria, VA 22313-1450.**

If you need assistance in completing the form, call 1-800-PTO-9199 and select option 2.

Privacy Act Statement

The **Privacy Act of 1974 (P.L. 93-579)** requires that you be given certain information in connection with your submission of the attached form related to a patent application or patent. Accordingly, pursuant to the requirements of the Act, please be advised that: (1) the general authority for the collection of this information is 35 U.S.C. 2(b)(2); (2) furnishing of the information solicited is voluntary; and (3) the principal purpose for which the information is used by the U.S. Patent and Trademark Office is to process and/or examine your submission related to a patent application or patent. If you do not furnish the requested information, the U.S. Patent and Trademark Office may not be able to process and/or examine your submission, which may result in termination of proceedings or abandonment of the application or expiration of the patent.

The information provided by you in this form will be subject to the following routine uses:

1. The information on this form will be treated confidentially to the extent allowed under the Freedom of Information Act (5 U.S.C. 552) and the Privacy Act (5 U.S.C 552a). Records from this system of records may be disclosed to the Department of Justice to determine whether disclosure of these records is required by the Freedom of Information Act.
2. A record from this system of records may be disclosed, as a routine use, in the course of presenting evidence to a court, magistrate, or administrative tribunal, including disclosures to opposing counsel in the course of settlement negotiations.
3. A record in this system of records may be disclosed, as a routine use, to a Member of Congress submitting a request involving an individual, to whom the record pertains, when the individual has requested assistance from the Member with respect to the subject matter of the record.
4. A record in this system of records may be disclosed, as a routine use, to a contractor of the Agency having need for the information in order to perform a contract. Recipients of information shall be required to comply with the requirements of the Privacy Act of 1974, as amended, pursuant to 5 U.S.C. 552a(m).
5. A record related to an International Application filed under the Patent Cooperation Treaty in this system of records may be disclosed, as a routine use, to the International Bureau of the World Intellectual Property Organization, pursuant to the Patent Cooperation Treaty.
6. A record in this system of records may be disclosed, as a routine use, to another federal agency for purposes of National Security review (35 U.S.C. 181) and for review pursuant to the Atomic Energy Act (42 U.S.C. 218(c)).
7. A record from this system of records may be disclosed, as a routine use, to the Administrator, General Services, or his/her designee, during an inspection of records conducted by GSA as part of that agency's responsibility to recommend improvements in records management practices and programs, under authority of 44 U.S.C. 2904 and 2906. Such disclosure shall be made in accordance with the GSA regulations governing inspection of records for this purpose, and any other relevant (*i.e.*, GSA or Commerce) directive. Such disclosure shall not be used to make determinations about individuals.
8. A record from this system of records may be disclosed, as a routine use, to the public after either publication of the application pursuant to 35 U.S.C. 122(b) or issuance of a patent pursuant to 35 U.S.C. 151. Further, a record may be disclosed, subject to the limitations of 37 CFR 1.14, as a routine use, to the public if the record was filed in an application which became abandoned or in which the proceedings were terminated and which application is referenced by either a published application, an application open to public inspection or an issued patent.
9. A record from this system of records may be disclosed, as a routine use, to a Federal, State, or local law enforcement agency, if the USPTO becomes aware of a violation or potential violation of law or regulation.

PTO/SB/22 (03-13)
Approved for use through 3/31/2013. OMB 0651-0031
U.S. Patent and Trademark Office; U.S. DEPARTMENT OF COMMERCE
Under the Paperwork Reduction Act of 1995, no persons are required to respond to a collection of information unless it displays a valid OMB control number.

PETITION FOR EXTENSION OF TIME UNDER 37 CFR 1.136(a)	Docket Number (Optional) Z005.01
Application Number 10/911,211	Filed October 13, 2004
For Multifunction Mobile Device and Appliance Control	
Art Unit 2644	Examiner Ajit Patel

This is a request under the provisions of 37 CFR 1.136(a) to extend the period for filing a reply in the above-identified application.

The requested extension and fee are as follows (check time period desired and enter the appropriate fee below):

		Fee	Small Entity Fee	Micro Entity Fee	
☐	One month (37 CFR 1.17(a)(1))	$200	$100	$50	$
☐	Two months (37 CFR 1.17(a)(2))	$600	$300	$150	$
☑	Three months (37 CFR 1.17(a)(3))	$1,400	$700	$350	$ 700
☐	Four months (37 CFR 1.17(a)(4))	$2,200	$1,100	$550	$
☐	Five months (37 CFR 1.17(a)(5))	$3,000	$1,500	$750	$

☑ Applicant asserts small entity status. See 37 CFR 1.27.

☐ Applicant certifies micro entity status. See 37 CFR 1.29.
Form PTO/SB/15A or B or equivalent must either be enclosed or have been submitted previously.

☐ A check in the amount of the fee is enclosed.

☑ Payment by credit card. Form PTO-2038 is attached.

☐ The Director has already been authorized to charge fees in this application to a Deposit Account.

☐ The Director is hereby authorized to charge any fees which may be required, or credit any overpayment, to Deposit Account Number _____.

☐ Payment made via EFS-Web.

WARNING: Information on this form may become public. Credit card information should not be included on this form. Provide credit card information and authorization on PTO-2038.

I am the

☑ applicant/inventor.

☐ assignee of record of the entire interest. See 37 CFR 3.71. 37 CFR 3.73(b) statement is enclosed (Form PTO/SB/96).

☐ attorney or agent of record. Registration number _____.

☐ attorney or agent acting under 37 CFR 1.34. Registration number _____.

/Rekha K. Rao/	October 20, 2016
Signature	Date
Rekha Rao, c/o Legal Representative Raman K. Rao	
Typed or printed name	Telephone Number

NOTE: This form must be signed in accordance with 37 CFR 1.33. See 37 CFR 1.4 for signature requirements and certifications. Submit multiple forms if more than one signature is required, see below*.

☑ * Total of 3 forms are submitted.

This collection of information is required by 37 CFR 1.136(a). The information is required to obtain or retain a benefit by the public, which is to file (and by the USPTO to process) an application. Confidentiality is governed by 35 U.S.C. 122 and 37 CFR 1.11 and 1.14. This collection is estimated to take 6 minutes to complete, including gathering, preparing, and submitting the completed application form to the USPTO. Time will vary depending upon the individual case. Any comments on the amount of time you require to complete this form and/or suggestions for reducing this burden should be sent to the Chief Information Officer, U.S. Patent and Trademark Office, U.S. Department of Commerce, P.O. Box 1450, Alexandria, VA 22313-1450. DO NOT SEND FEES OR COMPLETED FORMS TO THIS ADDRESS. **SEND TO: Commissioner for Patents, P.O. Box 1450, Alexandria, VA 22313-1450.**

If you need assistance in completing the form, call 1-800-PTO-9199 and select option 2.

Privacy Act Statement

The **Privacy Act of 1974 (P.L. 93-579)** requires that you be given certain information in connection with your submission of the attached form related to a patent application or patent. Accordingly, pursuant to the requirements of the Act, please be advised that: (1) the general authority for the collection of this information is 35 U.S.C. 2(b)(2); (2) furnishing of the information solicited is voluntary; and (3) the principal purpose for which the information is used by the U.S. Patent and Trademark Office is to process and/or examine your submission related to a patent application or patent. If you do not furnish the requested information, the U.S. Patent and Trademark Office may not be able to process and/or examine your submission, which may result in termination of proceedings or abandonment of the application or expiration of the patent.

The information provided by you in this form will be subject to the following routine uses:

1. The information on this form will be treated confidentially to the extent allowed under the Freedom of Information Act (5 U.S.C. 552) and the Privacy Act (5 U.S.C 552a). Records from this system of records may be disclosed to the Department of Justice to determine whether disclosure of these records is required by the Freedom of Information Act.
2. A record from this system of records may be disclosed, as a routine use, in the course of presenting evidence to a court, magistrate, or administrative tribunal, including disclosures to opposing counsel in the course of settlement negotiations.
3. A record in this system of records may be disclosed, as a routine use, to a Member of Congress submitting a request involving an individual, to whom the record pertains, when the individual has requested assistance from the Member with respect to the subject matter of the record.
4. A record in this system of records may be disclosed, as a routine use, to a contractor of the Agency having need for the information in order to perform a contract. Recipients of information shall be required to comply with the requirements of the Privacy Act of 1974, as amended, pursuant to 5 U.S.C. 552a(m).
5. A record related to an International Application filed under the Patent Cooperation Treaty in this system of records may be disclosed, as a routine use, to the International Bureau of the World Intellectual Property Organization, pursuant to the Patent Cooperation Treaty.
6. A record in this system of records may be disclosed, as a routine use, to another federal agency for purposes of National Security review (35 U.S.C. 181) and for review pursuant to the Atomic Energy Act (42 U.S.C. 218(c)).
7. A record from this system of records may be disclosed, as a routine use, to the Administrator, General Services, or his/her designee, during an inspection of records conducted by GSA as part of that agency's responsibility to recommend improvements in records management practices and programs, under authority of 44 U.S.C. 2904 and 2906. Such disclosure shall be made in accordance with the GSA regulations governing inspection of records for this purpose, and any other relevant (*i.e.*, GSA or Commerce) directive. Such disclosure shall not be used to make determinations about individuals.
8. A record from this system of records may be disclosed, as a routine use, to the public after either publication of the application pursuant to 35 U.S.C. 122(b) or issuance of a patent pursuant to 35 U.S.C. 151. Further, a record may be disclosed, subject to the limitations of 37 CFR 1.14, as a routine use, to the public if the record was filed in an application which became abandoned or in which the proceedings were terminated and which application is referenced by either a published application, an application open to public inspection or an issued patent.
9. A record from this system of records may be disclosed, as a routine use, to a Federal, State, or local law enforcement agency, if the USPTO becomes aware of a violation or potential violation of law or regulation.

PTO/SB/22 (03-13)
Approved for use through 3/31/2013. OMB 0651-0031
U.S. Patent and Trademark Office; U.S. DEPARTMENT OF COMMERCE
Under the Paperwork Reduction Act of 1995, no persons are required to respond to a collection of information unless it displays a valid OMB control number.

PETITION FOR EXTENSION OF TIME UNDER 37 CFR 1.136(a)	Docket Number (Optional) Z005.01
Application Number 10/911,211	Filed October 13, 2004
For Multifunction Mobile Device and Appliance Control	
Art Unit 2644	Examiner Ajit Patel

This is a request under the provisions of 37 CFR 1.136(a) to extend the period for filing a reply in the above-identified application.

The requested extension and fee are as follows (check time period desired and enter the appropriate fee below):

		Fee	Small Entity Fee	Micro Entity Fee	
☐	One month (37 CFR 1.17(a)(1))	$200	$100	$50	$
☐	Two months (37 CFR 1.17(a)(2))	$600	$300	$150	$
☑	Three months (37 CFR 1.17(a)(3))	$1,400	$700	$350	$ 700
☐	Four months (37 CFR 1.17(a)(4))	$2,200	$1,100	$550	$
☐	Five months (37 CFR 1.17(a)(5))	$3,000	$1,500	$750	$

☑ Applicant asserts small entity status. See 37 CFR 1.27.

☐ Applicant certifies micro entity status. See 37 CFR 1.29.
Form PTO/SB/15A or B or equivalent must either be enclosed or have been submitted previously.

☐ A check in the amount of the fee is enclosed.

☑ Payment by credit card. Form PTO-2038 is attached.

☐ The Director has already been authorized to charge fees in this application to a Deposit Account.

☐ The Director is hereby authorized to charge any fees which may be required, or credit any overpayment, to Deposit Account Number _____.

☐ Payment made via EFS-Web.

WARNING: Information on this form may become public. Credit card information should not be included on this form. Provide credit card information and authorization on PTO-2038.

I am the

☐ applicant/inventor.

☑ assignee of record of the entire interest. See 37 CFR 3.71. 37 CFR 3.73(b) statement is enclosed (Form PTO/SB/96).

☐ attorney or agent of record. Registration number _____.

☐ attorney or agent acting under 37 CFR 1.34. Registration number _____.

/Rekha K. Rao/	October 20, 2016
Signature	Date
Rekha Rao, c/o IP Holdings, Inc.	
Typed or printed name	Telephone Number

NOTE: This form must be signed in accordance with 37 CFR 1.33. See 37 CFR 1.4 for signature requirements and certifications. Submit multiple forms if more than one signature is required, see below*.

☑ * Total of 3 forms are submitted.

This collection of information is required by 37 CFR 1.136(a). The information is required to obtain or retain a benefit by the public, which is to file (and by the USPTO to process) an application. Confidentiality is governed by 35 U.S.C. 122 and 37 CFR 1.11 and 1.14. This collection is estimated to take 6 minutes to complete, including gathering, preparing, and submitting the completed application form to the USPTO. Time will vary depending upon the individual case. Any comments on the amount of time you require to complete this form and/or suggestions for reducing this burden should be sent to the Chief Information Officer, U.S. Patent and Trademark Office, U.S. Department of Commerce, P.O. Box 1450, Alexandria, VA 22313-1450. DO NOT SEND FEES OR COMPLETED FORMS TO THIS ADDRESS. **SEND TO: Commissioner for Patents, P.O. Box 1450, Alexandria, VA 22313-1450.**

If you need assistance in completing the form, call 1-800-PTO-9199 and select option 2.

Privacy Act Statement

The **Privacy Act of 1974 (P.L. 93-579)** requires that you be given certain information in connection with your submission of the attached form related to a patent application or patent. Accordingly, pursuant to the requirements of the Act, please be advised that: (1) the general authority for the collection of this information is 35 U.S.C. 2(b)(2); (2) furnishing of the information solicited is voluntary; and (3) the principal purpose for which the information is used by the U.S. Patent and Trademark Office is to process and/or examine your submission related to a patent application or patent. If you do not furnish the requested information, the U.S. Patent and Trademark Office may not be able to process and/or examine your submission, which may result in termination of proceedings or abandonment of the application or expiration of the patent.

The information provided by you in this form will be subject to the following routine uses:

1. The information on this form will be treated confidentially to the extent allowed under the Freedom of Information Act (5 U.S.C. 552) and the Privacy Act (5 U.S.C 552a). Records from this system of records may be disclosed to the Department of Justice to determine whether disclosure of these records is required by the Freedom of Information Act.
2. A record from this system of records may be disclosed, as a routine use, in the course of presenting evidence to a court, magistrate, or administrative tribunal, including disclosures to opposing counsel in the course of settlement negotiations.
3. A record in this system of records may be disclosed, as a routine use, to a Member of Congress submitting a request involving an individual, to whom the record pertains, when the individual has requested assistance from the Member with respect to the subject matter of the record.
4. A record in this system of records may be disclosed, as a routine use, to a contractor of the Agency having need for the information in order to perform a contract. Recipients of information shall be required to comply with the requirements of the Privacy Act of 1974, as amended, pursuant to 5 U.S.C. 552a(m).
5. A record related to an International Application filed under the Patent Cooperation Treaty in this system of records may be disclosed, as a routine use, to the International Bureau of the World Intellectual Property Organization, pursuant to the Patent Cooperation Treaty.
6. A record in this system of records may be disclosed, as a routine use, to another federal agency for purposes of National Security review (35 U.S.C. 181) and for review pursuant to the Atomic Energy Act (42 U.S.C. 218(c)).
7. A record from this system of records may be disclosed, as a routine use, to the Administrator, General Services, or his/her designee, during an inspection of records conducted by GSA as part of that agency's responsibility to recommend improvements in records management practices and programs, under authority of 44 U.S.C. 2904 and 2906. Such disclosure shall be made in accordance with the GSA regulations governing inspection of records for this purpose, and any other relevant (*i.e.*, GSA or Commerce) directive. Such disclosure shall not be used to make determinations about individuals.
8. A record from this system of records may be disclosed, as a routine use, to the public after either publication of the application pursuant to 35 U.S.C. 122(b) or issuance of a patent pursuant to 35 U.S.C. 151. Further, a record may be disclosed, subject to the limitations of 37 CFR 1.14, as a routine use, to the public if the record was filed in an application which became abandoned or in which the proceedings were terminated and which application is referenced by either a published application, an application open to public inspection or an issued patent.
9. A record from this system of records may be disclosed, as a routine use, to a Federal, State, or local law enforcement agency, if the USPTO becomes aware of a violation or potential violation of law or regulation.

Electronic Patent Application Fee Transmittal

Application Number:	10911211
Filing Date:	13-Oct-2004
Title of Invention:	Multifunction Mobile Devices and Appliance Control
First Named Inventor/Applicant Name:	Sanjay K. Rao
Filer:	Rekha Kaliputnam Rao/Sanjay Rao
Attorney Docket Number:	IPHLNZ00501

Filed as Small Entity

Filing Fees for Utility under 35 USC 111(a)

Description	Fee Code	Quantity	Amount	Sub-Total in USD($)
Basic Filing:				
Pages:				
Claims:				
Miscellaneous-Filing:				
Petition:				
Patent-Appeals-and-Interference:				
Post-Allowance-and-Post-Issuance:				
Extension-of-Time:				

Description	Fee Code	Quantity	Amount	Sub-Total in USD($)
Extension - 3 months with $0 paid	2253	1	700	700
Miscellaneous:				
		Total in USD ($)		**700**

Electronic Acknowledgement Receipt	
EFS ID:	27280690
Application Number:	10911211
International Application Number:	
Confirmation Number:	7409
Title of Invention:	Multifunction Mobile Devices and Appliance Control
First Named Inventor/Applicant Name:	Sanjay K. Rao
Customer Number:	105481
Filer:	Rekha Kaliputnam Rao/Sanjay Rao
Filer Authorized By:	Rekha Kaliputnam Rao
Attorney Docket Number:	IPHLNZ00501
Receipt Date:	20-OCT-2016
Filing Date:	13-OCT-2004
Time Stamp:	23:12:08
Application Type:	Utility under 35 USC 111(a)

Payment information:

Submitted with Payment	yes
Payment Type	CARD
Payment was successfully received in RAM	$700
RAM confirmation Number	102116INTEFSW23132200
Deposit Account	
Authorized User	
The Director of the USPTO is hereby authorized to charge indicated fees and credit any overpayment as follows:	

File Listing:

Document Number	Document Description	File Name	File Size(Bytes)/ Message Digest	Multi Part /.zip	Pages (if appl.)
1	Amendment/Req. Reconsideration-After Non-Final Reject	Z00501_201610.pdf	407175 4d7b2bc71572e89f0dfb7d6530faed21e39e04b1	no	13
Warnings:					
Information:					
2	Extension of Time	extensionofTime_1.pdf	185945 4d0e4abe574288096b852d5c49dde614da89515c	no	2
Warnings:					
Information:					
3	Extension of Time	extensionofTime_2.pdf	186155 2e62bd8107a4c175b4b1e44c5085107472b5cc8d	no	2
Warnings:					
Information:					
4	Extension of Time	extensionofTime_3.pdf	186437 5467755fb0410ee7a23165d01f584130995 2403a	no	2
Warnings:					
Information:					
5	Fee Worksheet (SB06)	fee-info.pdf	30592 60e88966c30b02ff55bef81df94198b05523bc40	no	2
Warnings:					
Information:					
		Total Files Size (in bytes):	996304		

This Acknowledgement Receipt evidences receipt on the noted date by the USPTO of the indicated documents, characterized by the applicant, and including page counts, where applicable. It serves as evidence of receipt similar to a Post Card, as described in MPEP 503.

New Applications Under 35 U.S.C. 111
If a new application is being filed and the application includes the necessary components for a filing date (see 37 CFR 1.53(b)-(d) and MPEP 506), a Filing Receipt (37 CFR 1.54) will be issued in due course and the date shown on this Acknowledgement Receipt will establish the filing date of the application.

National Stage of an International Application under 35 U.S.C. 371
If a timely submission to enter the national stage of an international application is compliant with the conditions of 35 U.S.C. 371 and other applicable requirements a Form PCT/DO/EO/903 indicating acceptance of the application as a national stage submission under 35 U.S.C. 371 will be issued in addition to the Filing Receipt, in due course.

New International Application Filed with the USPTO as a Receiving Office
If a new international application is being filed and the international application includes the necessary components for an international filing date (see PCT Article 11 and MPEP 1810), a Notification of the International Application Number and of the International Filing Date (Form PCT/RO/105) will be issued in due course, subject to prescriptions concerning national security, and the date shown on this Acknowledgement Receipt will establish the international filing date of the application.

PTO/SB/06 (09-11)
Approved for use through 1/31/2014. OMB 0651-0032
U.S. Patent and Trademark Office; U.S. DEPARTMENT OF COMMERCE
Under the Paperwork Reduction Act of 1995, no persons are required to respond to a collection of information unless it displays a valid OMB control number.

PATENT APPLICATION FEE DETERMINATION RECORD Substitute for Form PTO-875	Application or Docket Number 10/911,211	Filing Date 10/13/2004	☐ To be Mailed

ENTITY: ☐ LARGE ☒ SMALL ☐ MICRO

APPLICATION AS FILED – PART I

FOR	(Column 1) NUMBER FILED	(Column 2) NUMBER EXTRA	RATE ($)	FEE ($)
☐ BASIC FEE (37 CFR 1.16(a), (b), or (c))	N/A	N/A	N/A	
☐ SEARCH FEE (37 CFR 1.16(k), (i), or (m))	N/A	N/A	N/A	
☐ EXAMINATION FEE (37 CFR 1.16(o), (p), or (q))	N/A	N/A	N/A	
TOTAL CLAIMS (37 CFR 1.16(i))	minus 20 =	*	X $ =	
INDEPENDENT CLAIMS (37 CFR 1.16(h))	minus 3 =	*	X $ =	
☐ APPLICATION SIZE FEE (37 CFR 1.16(s))	If the specification and drawings exceed 100 sheets of paper, the application size fee due is $310 ($155 for small entity) for each additional 50 sheets or fraction thereof. See 35 U.S.C. 41(a)(1)(G) and 37 CFR 1.16(s).			
☐ MULTIPLE DEPENDENT CLAIM PRESENT (37 CFR 1.16(j))				
* If the difference in column 1 is less than zero, enter "0" in column 2.			TOTAL	

APPLICATION AS AMENDED – PART II

AMENDMENT **10/20/2016**

	(Column 1) CLAIMS REMAINING AFTER AMENDMENT		(Column 2) HIGHEST NUMBER PREVIOUSLY PAID FOR	(Column 3) PRESENT EXTRA	RATE ($)	ADDITIONAL FEE ($)
Total (37 CFR 1.16(i))	* 34	Minus	** 35	= 0	X $40 =	0
Independent (37 CFR 1.16(h))	* 4	Minus	***4	= 0	X $210 =	0
☐ Application Size Fee (37 CFR 1.16(s))						
☐ FIRST PRESENTATION OF MULTIPLE DEPENDENT CLAIM (37 CFR 1.16(j))						
					TOTAL ADD'L FEE	0

AMENDMENT

	(Column 1) CLAIMS REMAINING AFTER AMENDMENT		(Column 2) HIGHEST NUMBER PREVIOUSLY PAID FOR	(Column 3) PRESENT EXTRA	RATE ($)	ADDITIONAL FEE ($)
Total (37 CFR 1.16(i))	*	Minus	**	=	X $ =	
Independent (37 CFR 1.16(h))	*	Minus	***	=	X $ =	
☐ Application Size Fee (37 CFR 1.16(s))						
☐ FIRST PRESENTATION OF MULTIPLE DEPENDENT CLAIM (37 CFR 1.16(j))						
					TOTAL ADD'L FEE	

* If the entry in column 1 is less than the entry in column 2, write "0" in column 3.
** If the "Highest Number Previously Paid For" IN THIS SPACE is less than 20, enter "20".
*** If the "Highest Number Previously Paid For" IN THIS SPACE is less than 3, enter "3".
The "Highest Number Previously Paid For" (Total or Independent) is the highest number found in the appropriate box in column 1.

LIE
DORIS ISAAC

This collection of information is required by 37 CFR 1.16. The information is required to obtain or retain a benefit by the public which is to file (and by the USPTO to process) an application. Confidentiality is governed by 35 U.S.C. 122 and 37 CFR 1.14. This collection is estimated to take 12 minutes to complete, including gathering, preparing, and submitting the completed application form to the USPTO. Time will vary depending upon the individual case. Any comments on the amount of time you require to complete this form and/or suggestions for reducing this burden, should be sent to the Chief Information Officer, U.S. Patent and Trademark Office, U.S. Department of Commerce, P.O. Box 1450, Alexandria, VA 22313-1450. DO NOT SEND FEES OR COMPLETED FORMS TO THIS ADDRESS. **SEND TO: Commissioner for Patents, P.O. Box 1450, Alexandria, VA 22313-1450.**
If you need assistance in completing the form, call 1-800-PTO-9199 and select option 2.

UNITED STATES PATENT AND TRADEMARK OFFICE

UNITED STATES DEPARTMENT OF COMMERCE
U.S. Patent and Trademark Office
Address: COMMISSIONER FOR PATENTS
P.O. Box 1450
Alexandria, Virginia 22313-1450
www.uspto.gov

105481 e 2016-10-26

Rekha Rao
3087 Alexis Drive
Palo Alto, CA 94304

Paper No.

Application No.:	**10/911,211**	**Date Mailed:**	**2016-10-26**
First Named Inventor:	Sanjay K. Rao	Examiner:	PATEL, AJIT
Attorney Docket No.:	IPHLNZ00501	Art Unit:	2644
Confirmation No.:	7409	Filing Date:	10/13/2004

Please find attached an Office communication concerning this application or proceeding.

Commissioner for Patents

PTO-90c (Rev.08-06)

Notice of Non-Compliant Amendment (37 CFR 1.121)	Application No. 10/911,211	Applicant(s) RAO ET AL.

-- The MAILING DATE of this communication appears on the cover sheet with the correspondence address --

The amendment document filed on *20 October, 2016* is considered non-compliant because it has failed to meet the requirements of 37 CFR 1.121 or 1.4. In order for the amendment document to be compliant, correction of the following item(s) is required.

THE FOLLOWING MARKED (X) ITEM(S) CAUSE THE AMENDMENT DOCUMENT TO BE NON-COMPLIANT:

- ☐ 1. Amendments to the specification:
  - ☐ A. Amended paragraph(s) do not include markings.
  - ☐ B. New paragraph(s) should not be underlined.
  - ☐ C. Other _____.
- ☐ 2. Abstract:
  - ☐ A. Not presented on a separate sheet. 37 CFR 1.72.
  - ☐ B. Other _____.
- ☐ 3. Amendments to the drawings:
  - ☐ A. The drawings are not properly identified in the top margin as "Replacement Sheet," "New Sheet," or "Annotated Sheet" as required by 37 CFR 1.121(d).
  - ☐ B. The practice of submitting proposed drawing correction has been eliminated. Replacement drawings showing amended figures, without markings, in compliance with 37 CFR 1.84 are required.
  - ☐ C. Other _____.
- ☒ 4. Amendments to the claims:
  - ☐ A. A complete listing of all of the claims is not present.
  - ☐ B. The listing of claims does not include the text of all pending claims (including withdrawn claims)
  - ☒ C. Each claim has not been provided with the proper status identifier, and as such, the individual status of each claim cannot be identified. Note: the status of every claim must be indicated after its claim number by using one of the following status identifiers: (Original), (Currently amended), (Canceled), (Previously presented), (New), (Not entered), (Withdrawn) and (Withdrawn-currently amended).
  - ☐ D. The claims of this amendment paper have not been presented in ascending numerical order.
  - ☒ E. Other: *Claims 49, 59 and 67 was previously canceled*.
- ☐ 5. Other (e.g., the amendment is unsigned or not signed in accordance with 37 CFR 1.4): For further explanation of the amendment format required by 37 CFR 1.121, see MPEP § 714.

TIME PERIODS FOR FILING A REPLY TO THIS NOTICE:

1. Applicant is given **no new time period if the non-compliant amendment is an** after-final amendment or an amendment filed after allowance, or a drawing submission (only) If applicant wishes to resubmit the non-compliant after-final amendment with corrections, the **entire corrected amendment** must be resubmitted.

2. Applicant is given **two months** from the mail date of this notice to supply the correction, if the non-compliant amendment is one of the following: a preliminary amendment, a non-final amendment (including a submission for a request for continued examination (RCE) under 37 CFR 1.114), a supplemental amendment filed within a suspension period under 37 CFR 1.103(a) or (c), and an amendment filed in response to a Quayle action. If any of above boxes 1 to 4 are checked, the correction required is only the corrected section of the non-compliant amendment in compliance with 37 CFR 1.121.

Extensions of time are available under 37 CFR 1.136(a) only if the non-compliant amendment is a non-final amendment or an amendment filed in response to a *Quayle* action.

Failure to timely respond to this notice will result in:

Abandonment of the application if the non-compliant amendment is a non-final amendment or an amendment filed in response to a *Quayle* action; or

Non-entry of the amendment if the non-compliant amendment is a preliminary amendment or supplemental amendment.

Legal Instruments Examiner (LIE), if applicable DORIS ISAAC Telephone No: (571)272-9279

I hereby certify that this correspondence is being electronically transmitted to the USPTO on the date shown below.

Date: December 26, 2016 Signature: /Sanjay K. Rao/ (Sanjay K. Rao)

IN THE UNITED STATES PATENT AND TRADEMARK OFFICE

Application No.:	10/911,211
Confirmation No.:	7409
Filing Date:	October 13, 2004
Inventor(s):	Sanjay K. Rao et al.
Title:	Multifunction Mobile Devices and Appliance Control
Examiner:	AJIT PATEL
Group Art Unit:	7409

RESPONSE TO NON FINAL OFFICE ACTION

Mail Stop Amendments
Commissioner for Patents
P.O. Box 1450
Alexandria, VA 22313-1450

Dear Sir:

This is in response to the non Compliant Amendment dated October 26, 2016 for which a response is due December 26, 2016. Accordingly, this response is timely filed. Reconsideration and allowance of the pending claims, as amended, in light of the Remarks presented herein are respectfully requested.

Amendments to the Claims are reflected in the listing of claims which begins on page 2 of this paper.

Remarks begin on page 10 of this paper.

AMENDMENTS TO THE CLAIMS

This listing of claims will replace all prior versions, and listings, of claims in the application:

In the claims

1.-35. (Canceled).

36. (Currently Amended): A method for a mobile device using a server, the method comprising:

enabling the server to be in communication with the mobile device;

accepting an upload of software to a server configured for use by a plurality of mobile devices and further configured to provide a plurality of different software functions to mobile devices;

~~storing data on the server, the data comprising a plurality of functional instruction sets, software, or mobile device configuration software which is configured to operate and control components of mobile device hardware, wherein said server is at a remote location from the one or more mobile devices, and wherein the server is enabled with Internet Protocol connectivity.~~

~~configuring the server to be used for by the one or more mobile devices, such that the server functions as a repository of software for the mobile device and as an exchange for software for mobile devices;~~ configuring the mobile device ~~one or more mobile devices~~ to use the server to ~~download the software using~~ access a configuration setting; ~~wherein the mobile device remotely requests software from the server using a wireless network, wherein the server stores [[in]] a storage medium an association of the software with the mobile device and a user profile,~~

~~wherein the mobile device downloads software or a functional instruction set from the server using a wireless communication unit;~~

~~wherein the mobile device stores the software or the functional instruction set in a storage medium, and~~

wherein the mobile device includes one or more functions of a cellular telephone; ~~PDA, handheld computer, or multifunction communication device, or combinations thereof, and~~

~~wherein a processor of the mobile device is configured to execute the software so as to control the hardware of the mobile device;~~

and wherein the mobile device is configured to transmit and receive at a plurality of frequencies [[.]]; wherein the mobile device is dynamically software reconfigurable for the various environments wherein the mobile device is enabled to obtain a signal to noise ratio; wherein the mobile device is enabled to be tuned to transmit and/or receive frequencies including one or more primary values and subsidiary values; wherein the mobile device transmitter and receiver are independently tunable to one or more frequencies for operation in different environments based on the instructions of internal controller electronics and/or that of the server wherein the mobile device dynamically changes its frequency for communication;

wherein the mobile device uses a power level for an operating environment; and wherein both power output and channel bandwidth as are dynamically changed in real time.

37.-38 (Canceled).

39. (Currently Amended): A system comprising:

a remote server~~, the server~~ configured to store wireless device software for a plurality of different functions or applications for use by a plurality of wireless devices,

wherein the remote server stores in memory software ~~or functional instructions sets~~ for a wireless device, wherein the remote server sends to the wireless device software ~~or functional instruction sets~~, wherein the remote server stores profiles of user specific information,

wherein the wireless device is enabled for voice and data communication,

wherein the wireless device includes one or more functions of a cellular telephone, PDA, handheld computer, or multifunction communication device, or combinations thereof, wherein the wireless device is configured ~~to download the software from the remote server using an~~ to use Internet protocol; ~~, wherein the software is configured for use by the wireless device,~~

wherein the software controls a plurality of the hardware components on the wireless device;

wherein the wireless device is configured to transmit and receive at a plurality of frequencies: wherein the wireless device is enabled to be tuned to transmit and/or receive frequencies including one or more primary values and subsidiary values; wherein the wireless device transmitter and receiver are independently tunable to one or more frequencies for operation in different environments based on the instructions of internal controller electronics and/or that of the server wherein the wireless device dynamically changes its frequency for communication; wherein the wireless device uses a power level for an operating environment; and wherein both power output and channel bandwidth as are dynamically changed in real time.

~~wherein the server is enabled to provide a plurality of software and instruction sets for control of the wireless device for receipt by the wireless device wherein the device is enabled with software to control and command intelligent appliance using a server.~~

~~wherein said software includes macros for control of an appliance; and wherein the wireless device is enabled to control one or more appliances using a voice command~~.

40. (Previously presented): The system of claim 39, wherein the profiles contain information for both a user and the wireless device.

41. (Currently Amended): A wireless electronic device or mobile device, the device comprising:

a processor;

a memory;

a unit for wireless communication;

wherein the device is capable of voice and data communication,

wherein the device connects to a server,

wherein the device includes one or more functions of a cellular telephone, PDA, handheld computer, or multifunction communication device, or combinations thereof,

wherein the software is associated with a user and the device stored in a profile,

wherein the server is configured to store software for a plurality of wireless devices and for a plurality of applications for the plurality of wireless devices,

and wherein the device is enabled to communicate on a plurality of frequencies;

wherein the device is enabled for voice and data communication;

and wherein the device is enabled for voice communication using cellular and wherein the device is enabled for wireless voice communication using a local area ~~network.~~ network;

wherein the device dynamically software reconfigurable for the various environments;

wherein the device is enabled to be tuned to transmit and/or receive frequencies including one or more primary values and subsidiary values;

wherein the device dynamically changes its frequency for communication; wherein the device uses a power level for an operating environment;

and wherein both power output and channel bandwidth as are dynamically changed in real time.

42. (Previously Presented): The device of claim 40, wherein the device downloads an application to function as a remote control for one or more devices including a television.

43. (Currently Amended): A system comprising.

a wireless device ~~or mobile device including functions of one or more of a cellular telephone, PDA, handheld computer, or multifunction communication device or combinations thereof, the wireless device~~ configured to receive a non-transitory computer readable medium from a server located at a remote location separate from the wireless device, ~~the server configured to store a plurality of different application software or functional instructions for a plurality of wireless devices, one of the software application including a non-transitory~~ the computer readable storage medium for a wireless device comprising:

an application software to be run by a processor on the wireless device, wherein the wireless device is in further communication with a television configured to receive wireless commands over a network, wherein the wireless device is configured to send a request to the television, wherein the request comprises a control function for the television, wherein the wireless device is configured to send said commands using a local home IP network, and wherein the communication between the television and the wireless device is over a IP based network as part of a home network; and wherein the wireless device obtains from the server a plurality of software for the control of a plurality of home appliances; and wherein commands to the control the one or more appliances are voice actuated based on input to the wireless device; and wherein the device operates using a plurality of frequencies; and wherein the wireless device is enabled to be tuned to transmit and/or receive frequencies including one or more primary values and subsidiary values; wherein the wireless device dynamically changes its frequency for communication; and wherein the wireless device uses a various power level for an operating environment.

44. (Previously presented): The system of claim 43, wherein the wireless device is configured to communicate directly to the television.

45. (Previously presented): The system of claim 43, wherein the wireless device is configured to communicate a set of commands to a server, the server configured to communicate said commands to the television.

46. (Previously presented): The system of claim 43, wherein the wireless device is configured to communicate a set of commands over a network to a network switch box over a wireless local area network, and wherein the network switch box is configured to transmit said commands to a television.

47. (Previously presented): The system of claims 36, wherein the server provides software for the configuration of the mobile or wireless device as an IP telephone.

48. (Previously presented): The system of claims 36, wherein the download of the software is based on a hierarchy of network paths.

49. (Canceled): The system of claims 36, wherein the device is configured to queue various software applications for downloading at a later time in response to the type of network bandwidth.

50. (Previously presented): The system of claims 36, wherein the device is configured for location sensing through use of both GPS and the location of network box and reconfigures one or more parameters based on the location.

51. (Previously presented): The system of claims 36, wherein the mobile device is configured to download an application for controlling a garage door opener.

52. (Previously presented): The system of claims 36, wherein the mobile device is configured to function as an internet protocol IP phone.

53. (Previously presented): The system of claims 36, wherein the server is colocated with a wireless carrier.

54. (Previously presented): The system of claims 36, further in communication with a network box is for use in a home environment.

55. (Previously presented): The system of claim 36, wherein the server is colocated with an office network.

56. (Previously presented): The system of claims 36, wherein the mobile device.

serves as a remote controller for controlling intelligent office appliances.

57. (Previously presented): The system of claims 39, wherein responsive to a request from the one or more wireless device to a website or URL associated with a website server or a network environment, the one or more wireless device receives an indicator of a software application to be downloaded from the remote server,

58. (Previously presented): The system of claims 57, wherein the server delivers content not when device is in a carrier domain,

59. (Canceled): The system of claims 39, wherein the device is configured to queue various software application content for downloading at a later time in response to a set of networks available and a configuration associated with the networks.

60. (Previously presented): The system of claims 39, wherein the device determines a more precise location using both GPS location and a network box location.

61. (Previously presented): The system of claims 39, wherein the device is configured to download an application for controlling a garage door opener.

62. (Previously presented): The system of claims 39, wherein the device is configured to function as an internet protocol IP phone.

63. (Previously presented): The system of claims 39, wherein the server is collocated with a wireless carrier.

64. (Currently amended): The system of claim 39, further in communication with a network box for [[for]] use in a home.

65. (Previously presented): The system of claims 39, wherein the server is colocated with an office network.

66. (Previously presented): The system of claims 39, wherein the wireless device uses a command to a control a copier.

67. (Canceled): The system of claims 41, wherein the device is configured to queue various software application content for downloading at a later time in response to a set of networks available and a configuration associated with the networks.

68. (Previously presented): The system of claim 41, wherein the server delivers content not when device is in a carrier domain

69. (Previously presented): The system of claim 41, wherein the server provides software for the configuration of the mobile or wireless device as an IP (Internet Protocol) telephone.

70. (Previously presented): The system of claim 41, wherein the download of the application is based on a hierarchy of network paths.

71. (Previously presented): The system of claim 41, wherein the download from the server to the device is in a watchdog state and inactive.

72. (Previously presented): The system of claim 41, wherein the download of the software is based on a request to a URL associated with a server.

73. (Previously Presented): The system of claim 41, wherein a home server functions to controls a plurality of home intelligent appliances.

74. (Previously Presented): The system of claim 41, wherein the device communicates to a home server commands including starting and stopping an operation at a desired time, and wherein the home server controls one or more home intelligent appliances.

REMARKS

This application has been reviewed in light of the Non Compliant Notice dated October 26, 2016. The *Office* has stated that claims 49,59, and 67 should have been marked with the identifier of Canceled. In response, Applicants have further amended the claims and the updated the identified status. The changes to the claims are relative to the last accepted version of claims.

Claims 36, 39-48,50-58,60-66, and 68-74 were pending in the present application. By virtue of this response, claims 36, 39, 41, 43, 64 have been amended. Accordingly, claims 36,39,48, 50-58, 60-66, and 68-74 are believed to currently under consideration.

Amendment and cancellation of certain claims is not to be construed as a dedication to the public of any of the subject matter of the claims as previously presented. No new matter has been added

Rejections under 35 U.S.C. 103

The Office has entered in a plurality of rejections under 35 USC 103 which are largely summarized below. Applicants have amended the claims merely to advance prosecution.

A. Claims 36, 41 are rejected under pre-AIA 35 U.S.C. 103 (a) as allegedly being unpatentable over Ondeck (2002/0046083) in view of Bell (7,894,474).

B. Claims 72 and 74 are rejected under pre-AIA 35 U. S.C. 103 (a) as allegedly being unpatentable over Ondeck (2002/0046083) in view of Bell (7,894,474) and Stenman.

C. Claims 43-46,73 are rejected under pre-AIA 35 U S.C 103 (a) as allegedly being unpatentable over Ondeck (2002/0046083) in view of Bell (7,894,474) in view of Minnett (GB 2294563).

D. Claims 51 and 61 are rejected under pre-AIA 35 U.S.C. 103 (a) as allegedly being unpatentable over Ondeck (2002/0046083) in view of Bell (7,894,474) in view of King

E. Claims and 69 are rejected under pre-AIA 35 U.S.C. 103 (a) as allegedly being unpatentable over Ondeck (2002/0046083) in view of Bell (7,894,474) in view of Mattaway (US 6,13 1, 121).

F. Claims 49,69, and 67 are rejected under pre-AIA 35 U.S.C. 103 (a) as allegedly being unpatentable over Ondeck (2002/0046083) in view of Bell (7,894,474) in view of Engbersen (US 6,341,304).

G. Claims 58,68,and 71 are rejected under pre-AIA 35 U.S.C. 103 (a) as allegedly being unpatentable over Ondeck (2002/0046083) in view of Bell (7,894,474) in view of Lee (US 8,670,405).

H. Claims 50, 60, and 71 are rejected under pre-AIA 35 U.S.C. 103 (a) as allegedly being unpatentable over Ondeck (2002/0046083) in view of Bell (7,894,474) in view of Kretschman (6,674,464).

I. Claims 56 and 66 are rejected under pre-AIA 35 U.S.C. 103 (a) as allegedly being unpatentable over Ondeck (2002/0046083) in view of Bell (7,894,474) in view of Wood (6,453, 127).

It should be appreciated that the claims include the limitations of claims include for example: "wherein the mobile device is configured to transmit and receive at a plurality of frequencies: wherein the mobile device is enabled to be tuned to transmit and/or receive frequencies including one or more primary values and subsidiary values; wherein the mobile device transmitter and receiver are independently tunable to one or more frequencies for operation in different environments based on the instructions of internal controller electronics and/or that of the server wherein the mobile device dynamically changes its frequency for communication; wherein the mobile device uses a power level for an operating environment; and wherein both power output and channel bandwidth as are dynamically changed in real time."

Applicants have made various amendments to the claims so as to allow the wireless device to provide various enhanced transmit and receive capabilities. None of the cited art anticipates the existing and nor as amended claims.

No fees are believed due. However, should it be determined that processing of this paper requires additional fees under 37 C.F.R. 1.16 or 1.17, the Director is hereby authorized to charge such fees to **Deposit Account No. 506155**.

Respectfully submitted,

/ Sanjay K Rao/

Sanjay Rao, Joint Inventor

/ Sunil K. Rao/

Sanjay Rao, Joint Inventor

/ Rekha Rao/

Legal Representative for Joint Inventor, Raman K. Rao

/ Rekha Rao/

Assignee, IP Holdings, Inc.

Electronic Acknowledgement Receipt

EFS ID:	27899775
Application Number:	10911211
International Application Number:	
Confirmation Number:	7409
Title of Invention:	Multifunction Mobile Devices and Appliance Control
First Named Inventor/Applicant Name:	Sanjay K. Rao
Customer Number:	105481
Filer:	Rekha Kaliputnam Rao/Sanjay Rao
Filer Authorized By:	Rekha Kaliputnam Rao
Attorney Docket Number:	IPHLNZ00501
Receipt Date:	26-DEC-2016
Filing Date:	13-OCT-2004
Time Stamp:	21:45:15
Application Type:	Utility under 35 USC 111(a)

Payment information:

Submitted with Payment	no

File Listing:

Document Number	Document Description	File Name	File Size(Bytes)/ Message Digest	Multi Part /.zip	Pages (if appl.)
1	Amendment/Req. Reconsideration-After Non-Final Reject	ResponseNONCOMPLIANT12262016.pdf	495212 a1f9809394947ba2ca3c82bbe90157f00408ee59	no	12

Warnings:

Information:	
Total Files Size (in bytes):	495212

This Acknowledgement Receipt evidences receipt on the noted date by the USPTO of the indicated documents, characterized by the applicant, and including page counts, where applicable. It serves as evidence of receipt similar to a Post Card, as described in MPEP 503.

New Applications Under 35 U.S.C. 111
If a new application is being filed and the application includes the necessary components for a filing date (see 37 CFR 1.53(b)-(d) and MPEP 506), a Filing Receipt (37 CFR 1.54) will be issued in due course and the date shown on this Acknowledgement Receipt will establish the filing date of the application.

National Stage of an International Application under 35 U.S.C. 371
If a timely submission to enter the national stage of an international application is compliant with the conditions of 35 U.S.C. 371 and other applicable requirements a Form PCT/DO/EO/903 indicating acceptance of the application as a national stage submission under 35 U.S.C. 371 will be issued in addition to the Filing Receipt, in due course.

New International Application Filed with the USPTO as a Receiving Office
If a new international application is being filed and the international application includes the necessary components for an international filing date (see PCT Article 11 and MPEP 1810), a Notification of the International Application Number and of the International Filing Date (Form PCT/RO/105) will be issued in due course, subject to prescriptions concerning national security, and the date shown on this Acknowledgement Receipt will establish the international filing date of the application.

PTO/SB/06 (09-11)
Approved for use through 1/31/2014. OMB 0651-0032
U.S. Patent and Trademark Office; U.S. DEPARTMENT OF COMMERCE
Under the Paperwork Reduction Act of 1995, no persons are required to respond to a collection of information unless it displays a valid OMB control number.

PATENT APPLICATION FEE DETERMINATION RECORD Substitute for Form PTO-875	Application or Docket Number 10/911,211	Filing Date 10/13/2004	☐ To be Mailed

ENTITY: ☐ LARGE ☒ SMALL ☐ MICRO

APPLICATION AS FILED – PART I

	(Column 1)	(Column 2)		
FOR	NUMBER FILED	NUMBER EXTRA	RATE ($)	FEE ($)
☐ BASIC FEE (37 CFR 1.16(a), (b), or (c))	N/A	N/A	N/A	
☐ SEARCH FEE (37 CFR 1.16(k), (i), or (m))	N/A	N/A	N/A	
☐ EXAMINATION FEE (37 CFR 1.16(o), (p), or (q))	N/A	N/A	N/A	
TOTAL CLAIMS (37 CFR 1.16(i))	minus 20 =	*	X $ =	
INDEPENDENT CLAIMS (37 CFR 1.16(h))	minus 3 =	*	X $ =	
☐ APPLICATION SIZE FEE (37 CFR 1.16(s))	If the specification and drawings exceed 100 sheets of paper, the application size fee due is $310 ($155 for small entity) for each additional 50 sheets or fraction thereof. See 35 U.S.C. 41(a)(1)(G) and 37 CFR 1.16(s).			
☐ MULTIPLE DEPENDENT CLAIM PRESENT (37 CFR 1.16(j))				
* If the difference in column 1 is less than zero, enter "0" in column 2.			TOTAL	

APPLICATION AS AMENDED – PART II

		(Column 1)		(Column 2)	(Column 3)		
	12/26/2016	CLAIMS REMAINING AFTER AMENDMENT		HIGHEST NUMBER PREVIOUSLY PAID FOR	PRESENT EXTRA	RATE ($)	ADDITIONAL FEE ($)
AMENDMENT	Total (37 CFR 1.16(i))	* 37	Minus	** 34	= 3	X $40 =	120
	Independent (37 CFR 1.16(h))	* 4	Minus	***4	= 0	X $210 =	0
	☐ Application Size Fee (37 CFR 1.16(s))						
	☐ FIRST PRESENTATION OF MULTIPLE DEPENDENT CLAIM (37 CFR 1.16(j))						
						TOTAL ADD'L FEE	120

		(Column 1)		(Column 2)	(Column 3)		
		CLAIMS REMAINING AFTER AMENDMENT		HIGHEST NUMBER PREVIOUSLY PAID FOR	PRESENT EXTRA	RATE ($)	ADDITIONAL FEE ($)
AMENDMENT	Total (37 CFR 1.16(i))	*	Minus	**	=	X $ =	
	Independent (37 CFR 1.16(h))	*	Minus	***	=	X $ =	
	☐ Application Size Fee (37 CFR 1.16(s))						
	☐ FIRST PRESENTATION OF MULTIPLE DEPENDENT CLAIM (37 CFR 1.16(j))						
						TOTAL ADD'L FEE	

* If the entry in column 1 is less than the entry in column 2, write "0" in column 3.
** If the "Highest Number Previously Paid For" IN THIS SPACE is less than 20, enter "20".
*** If the "Highest Number Previously Paid For" IN THIS SPACE is less than 3, enter "3".
The "Highest Number Previously Paid For" (Total or Independent) is the highest number found in the appropriate box in column 1.

LIE
MARCUS PRIDGEN

This collection of information is required by 37 CFR 1.16. The information is required to obtain or retain a benefit by the public which is to file (and by the USPTO to process) an application. Confidentiality is governed by 35 U.S.C. 122 and 37 CFR 1.14. This collection is estimated to take 12 minutes to complete, including gathering, preparing, and submitting the completed application form to the USPTO. Time will vary depending upon the individual case. Any comments on the amount of time you require to complete this form and/or suggestions for reducing this burden, should be sent to the Chief Information Officer, U.S. Patent and Trademark Office, U.S. Department of Commerce, P.O. Box 1450, Alexandria, VA 22313-1450. DO NOT SEND FEES OR COMPLETED FORMS TO THIS ADDRESS. **SEND TO: Commissioner for Patents, P.O. Box 1450, Alexandria, VA 22313-1450.**
If you need assistance in completing the form, call 1-800-PTO-9199 and select option 2.

UNITED STATES PATENT AND TRADEMARK OFFICE

UNITED STATES DEPARTMENT OF COMMERCE
United States Patent and Trademark Office
Address: COMMISSIONER FOR PATENTS
P.O. Box 1450
Alexandria, Virginia 22313-1450
www.uspto.gov

NOTICE OF ALLOWANCE AND FEE(S) DUE

105481 7590 04/06/2017

Rekha Rao
3087 Alexis Drive
Palo Alto, CA 94304

EXAMINER
PATEL, AJIT

ART UNIT	PAPER NUMBER
2644	

DATE MAILED: 04/06/2017

APPLICATION NO.	FILING DATE	FIRST NAMED INVENTOR	ATTORNEY DOCKET NO.	CONFIRMATION NO.
10/911,211	10/13/2004	Sanjay K. Rao	IPHLNZ00501	7409

TITLE OF INVENTION: Multifunction Mobile Devices and Appliance Control

APPLN. TYPE	ENTITY STATUS	ISSUE FEE DUE	PUBLICATION FEE DUE	PREV. PAID ISSUE FEE	TOTAL FEE(S) DUE	DATE DUE
nonprovisional	SMALL	$480	$0	$0	$480	07/06/2017

THE APPLICATION IDENTIFIED ABOVE HAS BEEN EXAMINED AND IS ALLOWED FOR ISSUANCE AS A PATENT. PROSECUTION ON THE MERITS IS CLOSED. THIS NOTICE OF ALLOWANCE IS NOT A GRANT OF PATENT RIGHTS. THIS APPLICATION IS SUBJECT TO WITHDRAWAL FROM ISSUE AT THE INITIATIVE OF THE OFFICE OR UPON PETITION BY THE APPLICANT. SEE 37 CFR 1.313 AND MPEP 1308.

THE ISSUE FEE AND PUBLICATION FEE (IF REQUIRED) MUST BE PAID WITHIN THREE MONTHS FROM THE MAILING DATE OF THIS NOTICE OR THIS APPLICATION SHALL BE REGARDED AS ABANDONED. THIS STATUTORY PERIOD CANNOT BE EXTENDED. SEE 35 U.S.C. 151. THE ISSUE FEE DUE INDICATED ABOVE DOES NOT REFLECT A CREDIT FOR ANY PREVIOUSLY PAID ISSUE FEE IN THIS APPLICATION. IF AN ISSUE FEE HAS PREVIOUSLY BEEN PAID IN THIS APPLICATION (AS SHOWN ABOVE), THE RETURN OF PART B OF THIS FORM WILL BE CONSIDERED A REQUEST TO REAPPLY THE PREVIOUSLY PAID ISSUE FEE TOWARD THE ISSUE FEE NOW DUE.

HOW TO REPLY TO THIS NOTICE:

I. Review the ENTITY STATUS shown above. If the ENTITY STATUS is shown as SMALL or MICRO, verify whether entitlement to that entity status still applies.

If the ENTITY STATUS is the same as shown above, pay the TOTAL FEE(S) DUE shown above.

If the ENTITY STATUS is changed from that shown above, on PART B - FEE(S) TRANSMITTAL, complete section number 5 titled "Change in Entity Status (from status indicated above)".

For purposes of this notice, small entity fees are 1/2 the amount of undiscounted fees, and micro entity fees are 1/2 the amount of small entity fees.

II. PART B - FEE(S) TRANSMITTAL, or its equivalent, must be completed and returned to the United States Patent and Trademark Office (USPTO) with your ISSUE FEE and PUBLICATION FEE (if required). If you are charging the fee(s) to your deposit account, section "4b" of Part B - Fee(s) Transmittal should be completed and an extra copy of the form should be submitted. If an equivalent of Part B is filed, a request to reapply a previously paid issue fee must be clearly made, and delays in processing may occur due to the difficulty in recognizing the paper as an equivalent of Part B.

III. All communications regarding this application must give the application number. Please direct all communications prior to issuance to Mail Stop ISSUE FEE unless advised to the contrary.

IMPORTANT REMINDER: Utility patents issuing on applications filed on or after Dec. 12, 1980 may require payment of maintenance fees. It is patentee's responsibility to ensure timely payment of maintenance fees when due.

PTOL-85 (Rev. 02/11)

PART B - FEE(S) TRANSMITTAL

Complete and send this form, together with applicable fee(s), to: Mail **Mail Stop ISSUE FEE**
Commissioner for Patents
P.O. Box 1450
Alexandria, Virginia 22313-1450
or Fax (571)-273-2885

INSTRUCTIONS: This form should be used for transmitting the ISSUE FEE and PUBLICATION FEE (if required). Blocks 1 through 5 should be completed where appropriate. All further correspondence including the Patent, advance orders and notification of maintenance fees will be mailed to the current correspondence address as indicated unless corrected below or directed otherwise in Block 1, by (a) specifying a new correspondence address; and/or (b) indicating a separate "FEE ADDRESS" for maintenance fee notifications.

CURRENT CORRESPONDENCE ADDRESS (Note: Use Block 1 for any change of address)

105481 7590 04/06/2017
Rekha Rao
3087 Alexis Drive
Palo Alto, CA 94304

Note: A certificate of mailing can only be used for domestic mailings of the Fee(s) Transmittal. This certificate cannot be used for any other accompanying papers. Each additional paper, such as an assignment or formal drawing, must have its own certificate of mailing or transmission.

Certificate of Mailing or Transmission
I hereby certify that this Fee(s) Transmittal is being deposited with the United States Postal Service with sufficient postage for first class mail in an envelope addressed to the Mail Stop ISSUE FEE address above, or being facsimile transmitted to the USPTO (571) 273-2885, on the date indicated below.

(Depositor's name)
(Signature)
(Date)

APPLICATION NO.	FILING DATE	FIRST NAMED INVENTOR	ATTORNEY DOCKET NO.	CONFIRMATION NO.
10/911,211	10/13/2004	Sanjay K. Rao	IPHLNZ00501	7409

TITLE OF INVENTION: Multifunction Mobile Devices and Appliance Control

APPLN. TYPE	ENTITY STATUS	ISSUE FEE DUE	PUBLICATION FEE DUE	PREV. PAID ISSUE FEE	TOTAL FEE(S) DUE	DATE DUE
nonprovisional	SMALL	$480	$0	$0	$480	07/06/2017

EXAMINER	ART UNIT	CLASS-SUBCLASS
PATEL, AJIT	2644	455-432300

1. Change of correspondence address or indication of "Fee Address" (37 CFR 1.363).
- ❑ Change of correspondence address (or Change of Correspondence Address form PTO/SB/122) attached.
- ❑ "Fee Address" indication (or "Fee Address" Indication form PTO/SB/47; Rev 03-02 or more recent) attached. **Use of a Customer Number is required.**

2. For printing on the patent front page, list
(1) The names of up to 3 registered patent attorneys or agents OR, alternatively,
(2) The name of a single firm (having as a member a registered attorney or agent) and the names of up to 2 registered patent attorneys or agents. If no name is listed, no name will be printed.
1 _____
2 _____
3 _____

3. ASSIGNEE NAME AND RESIDENCE DATA TO BE PRINTED ON THE PATENT (print or type)

PLEASE NOTE: Unless an assignee is identified below, no assignee data will appear on the patent. If an assignee is identified below, the document has been filed for recordation as set forth in 37 CFR 3.11. Completion of this form is NOT a substitute for filing an assignment.

(A) NAME OF ASSIGNEE (B) RESIDENCE: (CITY and STATE OR COUNTRY)

Please check the appropriate assignee category or categories (will not be printed on the patent) : ❑ Individual ❑ Corporation or other private group entity ❑ Government

4a. The following fee(s) are submitted:
- ❑ Issue Fee
- ❑ Publication Fee (No small entity discount permitted)
- ❑ Advance Order - # of Copies _____

4b. Payment of Fee(s): (**Please first reapply any previously paid issue fee shown above**)
- ❑ A check is enclosed.
- ❑ Payment by credit card. Form PTO-2038 is attached.
- ❑ The director is hereby authorized to charge the required fee(s), any deficiency, or credits any overpayment, to Deposit Account Number _____ (enclose an extra copy of this form).

5. **Change in Entity Status** (from status indicated above)
- ❑ Applicant certifying micro entity status. See 37 CFR 1.29 — NOTE: Absent a valid certification of Micro Entity Status (see forms PTO/SB/15A and 15B), issue fee payment in the micro entity amount will not be accepted at the risk of application abandonment.
- ❑ Applicant asserting small entity status. See 37 CFR 1.27 — NOTE: If the application was previously under micro entity status, checking this box will be taken to be a notification of loss of entitlement to micro entity status.
- ❑ Applicant changing to regular undiscounted fee status. — NOTE: Checking this box will be taken to be a notification of loss of entitlement to small or micro entity status, as applicable.

NOTE: This form must be signed in accordance with 37 CFR 1.31 and 1.33. See 37 CFR 1.4 for signature requirements and certifications.

Authorized Signature _____ Date _____

Typed or printed name _____ Registration No. _____

PTOL-85 Part B (10-13) Approved for use through 10/31/2013. OMB 0651-0033 U.S. Patent and Trademark Office; U.S. DEPARTMENT OF COMMERCE

UNITED STATES PATENT AND TRADEMARK OFFICE

UNITED STATES DEPARTMENT OF COMMERCE
United States Patent and Trademark Office
Address: COMMISSIONER FOR PATENTS
P.O. Box 1450
Alexandria, Virginia 22313-1450
www.uspto.gov

APPLICATION NO.	FILING DATE	FIRST NAMED INVENTOR	ATTORNEY DOCKET NO.	CONFIRMATION NO.
10/911,211	10/13/2004	Sanjay K. Rao	IPHLNZ00501	7409

105481 7590 04/06/2017

Rekha Rao
3087 Alexis Drive
Palo Alto, CA 94304

EXAMINER	
PATEL, AJIT	

ART UNIT	PAPER NUMBER
2644	

DATE MAILED: 04/06/2017

Determination of Patent Term Adjustment under 35 U.S.C. 154 (b)
(Applications filed on or after May 29, 2000)

The Office has discontinued providing a Patent Term Adjustment (PTA) calculation with the Notice of Allowance.

Section 1(h)(2) of the AIA Technical Corrections Act amended 35 U.S.C. 154(b)(3)(B)(i) to eliminate the requirement that the Office provide a patent term adjustment determination with the notice of allowance. See Revisions to Patent Term Adjustment, 78 Fed. Reg. 19416, 19417 (Apr. 1, 2013). Therefore, the Office is no longer providing an initial patent term adjustment determination with the notice of allowance. The Office will continue to provide a patent term adjustment determination with the Issue Notification Letter that is mailed to applicant approximately three weeks prior to the issue date of the patent, and will include the patent term adjustment on the patent. Any request for reconsideration of the patent term adjustment determination (or reinstatement of patent term adjustment) should follow the process outlined in 37 CFR 1.705.

Any questions regarding the Patent Term Extension or Adjustment determination should be directed to the Office of Patent Legal Administration at (571)-272-7702. Questions relating to issue and publication fee payments should be directed to the Customer Service Center of the Office of Patent Publication at 1-(888)-786-0101 or (571)-272-4200.

OMB Clearance and PRA Burden Statement for PTOL-85 Part B

The Paperwork Reduction Act (PRA) of 1995 requires Federal agencies to obtain Office of Management and Budget approval before requesting most types of information from the public. When OMB approves an agency request to collect information from the public, OMB (i) provides a valid OMB Control Number and expiration date for the agency to display on the instrument that will be used to collect the information and (ii) requires the agency to inform the public about the OMB Control Number's legal significance in accordance with 5 CFR 1320.5(b).

The information collected by PTOL-85 Part B is required by 37 CFR 1.311. The information is required to obtain or retain a benefit by the public which is to file (and by the USPTO to process) an application. Confidentiality is governed by 35 U.S.C. 122 and 37 CFR 1.14. This collection is estimated to take 12 minutes to complete, including gathering, preparing, and submitting the completed application form to the USPTO. Time will vary depending upon the individual case. Any comments on the amount of time you require to complete this form and/or suggestions for reducing this burden, should be sent to the Chief Information Officer, U.S. Patent and Trademark Office, U.S. Department of Commerce, P.O. Box 1450, Alexandria, Virginia 22313-1450. DO NOT SEND FEES OR COMPLETED FORMS TO THIS ADDRESS. SEND TO: Commissioner for Patents, P.O. Box 1450, Alexandria, Virginia 22313-1450. Under the Paperwork Reduction Act of 1995, no persons are required to respond to a collection of information unless it displays a valid OMB control number.

Privacy Act Statement

The Privacy Act of 1974 (P.L. 93-579) requires that you be given certain information in connection with your submission of the attached form related to a patent application or patent. Accordingly, pursuant to the requirements of the Act, please be advised that: (1) the general authority for the collection of this information is 35 U.S.C. 2(b)(2); (2) furnishing of the information solicited is voluntary; and (3) the principal purpose for which the information is used by the U.S. Patent and Trademark Office is to process and/or examine your submission related to a patent application or patent. If you do not furnish the requested information, the U.S. Patent and Trademark Office may not be able to process and/or examine your submission, which may result in termination of proceedings or abandonment of the application or expiration of the patent.

The information provided by you in this form will be subject to the following routine uses:

1. The information on this form will be treated confidentially to the extent allowed under the Freedom of Information Act (5 U.S.C. 552) and the Privacy Act (5 U.S.C 552a). Records from this system of records may be disclosed to the Department of Justice to determine whether disclosure of these records is required by the Freedom of Information Act.
2. A record from this system of records may be disclosed, as a routine use, in the course of presenting evidence to a court, magistrate, or administrative tribunal, including disclosures to opposing counsel in the course of settlement negotiations.
3. A record in this system of records may be disclosed, as a routine use, to a Member of Congress submitting a request involving an individual, to whom the record pertains, when the individual has requested assistance from the Member with respect to the subject matter of the record.
4. A record in this system of records may be disclosed, as a routine use, to a contractor of the Agency having need for the information in order to perform a contract. Recipients of information shall be required to comply with the requirements of the Privacy Act of 1974, as amended, pursuant to 5 U.S.C. 552a(m).
5. A record related to an International Application filed under the Patent Cooperation Treaty in this system of records may be disclosed, as a routine use, to the International Bureau of the World Intellectual Property Organization, pursuant to the Patent Cooperation Treaty.
6. A record in this system of records may be disclosed, as a routine use, to another federal agency for purposes of National Security review (35 U.S.C. 181) and for review pursuant to the Atomic Energy Act (42 U.S.C. 218(c)).
7. A record from this system of records may be disclosed, as a routine use, to the Administrator, General Services, or his/her designee, during an inspection of records conducted by GSA as part of that agency's responsibility to recommend improvements in records management practices and programs, under authority of 44 U.S.C. 2904 and 2906. Such disclosure shall be made in accordance with the GSA regulations governing inspection of records for this purpose, and any other relevant (i.e., GSA or Commerce) directive. Such disclosure shall not be used to make determinations about individuals.
8. A record from this system of records may be disclosed, as a routine use, to the public after either publication of the application pursuant to 35 U.S.C. 122(b) or issuance of a patent pursuant to 35 U.S.C. 151. Further, a record may be disclosed, subject to the limitations of 37 CFR 1.14, as a routine use, to the public if the record was filed in an application which became abandoned or in which the proceedings were terminated and which application is referenced by either a published application, an application open to public inspection or an issued patent.
9. A record from this system of records may be disclosed, as a routine use, to a Federal, State, or local law enforcement agency, if the USPTO becomes aware of a violation or potential violation of law or regulation.

Notice of Allowability	Application No. 10/911,211	Applicant(s) RAO ET AL.	
	Examiner AJIT PATEL	Art Unit 2644	AIA (First Inventor to File) Status No

-- The MAILING DATE of this communication appears on the cover sheet with the correspondence address--

All claims being allowable, PROSECUTION ON THE MERITS IS (OR REMAINS) CLOSED in this application. If not included herewith (or previously mailed), a Notice of Allowance (PTOL-85) or other appropriate communication will be mailed in due course. **THIS NOTICE OF ALLOWABILITY IS NOT A GRANT OF PATENT RIGHTS.** This application is subject to withdrawal from issue at the initiative of the Office or upon petition by the applicant. See 37 CFR 1.313 and MPEP 1308.

1. ☒ This communication is responsive to *12/26/2016*.
   ☐ A declaration(s)/affidavit(s) under **37 CFR 1.130(b)** was/were filed on_____.
2. ☐ An election was made by the applicant in response to a restriction requirement set forth during the interview on _____; the restriction requirement and election have been incorporated into this action.
3. ☒ The allowed claim(s) is/are *36 and 39-74*. As a result of the allowed claim(s), you may be eligible to benefit from the **Patent Prosecution Highway** program at a participating intellectual property office for the corresponding application. For more information, please see http://www.uspto.gov/patents/init_events/pph/index.jsp or send an inquiry to PPHfeedback@uspto.gov.
4. ☐ Acknowledgment is made of a claim for foreign priority under 35 U.S.C. § 119(a)-(d) or (f).

   Certified copies:

   a) ☐ All b) ☐ Some *c) ☐ None of the:
   1. ☐ Certified copies of the priority documents have been received.
   2. ☐ Certified copies of the priority documents have been received in Application No. _____ .
   3. ☐ Copies of the certified copies of the priority documents have been received in this national stage application from the International Bureau (PCT Rule 17.2(a)).

   * Certified copies not received: _____.

Applicant has THREE MONTHS FROM THE "MAILING DATE" of this communication to file a reply complying with the requirements noted below. Failure to timely comply will result in ABANDONMENT of this application.
THIS THREE-MONTH PERIOD IS NOT EXTENDABLE.

5. ☐ CORRECTED DRAWINGS (as "replacement sheets") must be submitted.
   ☐ including changes required by the attached Examiner's Amendment / Comment or in the Office action of Paper No./Mail Date _____.

   Identifying indicia such as the application number (see 37 CFR 1.84(c)) should be written on the drawings in the front (not the back) of each sheet. Replacement sheet(s) should be labeled as such in the header according to 37 CFR 1.121(d).
6. ☐ DEPOSIT OF and/or INFORMATION about the deposit of BIOLOGICAL MATERIAL must be submitted. Note the attached Examiner's comment regarding REQUIREMENT FOR THE DEPOSIT OF BIOLOGICAL MATERIAL.

Attachment(s)

1. ☒ Notice of References Cited (PTO-892)
2. ☐ Information Disclosure Statements (PTO/SB/08), Paper No./Mail Date _____
3. ☐ Examiner's Comment Regarding Requirement for Deposit of Biological Material
4. ☐ Interview Summary (PTO-413), Paper No./Mail Date _____ .
5. ☒ Examiner's Amendment/Comment
6. ☐ Examiner's Statement of Reasons for Allowance
7. ☐ Other _____.

/AJIT PATEL/
Primary Examiner, Art Unit 2644

1. The present application is being examined under the pre-AIA first to invent provisions.

2. The examiner tried to contact the applicant/applicant representative for clarification in claim 43. However, no telephone number is available for the applicant/applicant representative.

EXAMINER'S AMENDMENT

3. An examiner's amendment to the record appears below. Should the changes and/or additions be unacceptable to applicant, an amendment may be filed as provided by 37 CFR 1.312. To ensure consideration of such an amendment, it MUST be submitted no later than the payment of the issue fee.

The application has been amended as follows: The claim 43 has been amended as follows:

In claim 43, line 8-9, the computer readable storage medium has been changed to --the non-transitory computer readable medium--.

It is noted that the above terminology is in consistent with the terminology used in line 4-5 of claim 43.

4. Any inquiry concerning this communication or earlier communications from the examiner should be directed to AJIT PATEL whose telephone number is (571)272-3140. The examiner can normally be reached on MON-FRI.

Examiner interviews are available via telephone, in-person, and video conferencing using a USPTO supplied web-based collaboration tool. To schedule an interview, applicant is encouraged to use the USPTO Automated Interview Request (AIR) at http://www.uspto.gov/interviewpractice.

If attempts to reach the examiner by telephone are unsuccessful, the examiner's supervisor, Kathy Wang-Hurst can be reached on 571-270-5371. The fax phone number for the organization where this application or proceeding is assigned is 571-273-8300.

Information regarding the status of an application may be obtained from the Patent Application Information Retrieval (PAIR) system. Status information for published applications may be obtained from either Private PAIR or Public PAIR. Status information for unpublished applications is available through Private PAIR only. For more information about the PAIR system, see http://pair-direct.uspto.gov. Should you have questions on access to the Private PAIR system, contact the Electronic Business Center (EBC) at 866-217-9197 (toll-free). If you would like assistance from a USPTO Customer Service Representative or access to the automated information system, call 800-786-9199 (IN USA OR CANADA) or 571-272-1000.

/AJIT PATEL/

Primary Examiner, Art Unit 2644

Notice of References Cited	Application/Control No. 10/911,211	Applicant(s)/Patent Under Reexamination RAO ET AL.	
	Examiner AJIT PATEL	Art Unit 2644	Page 1 of 1

U.S. PATENT DOCUMENTS

*		Document Number Country Code-Number-Kind Code	Date MM-YYYY	Name	CPC Classification	US Classification
*	A	US-5,671,267 A	09-1997	August; Katherine Grace	H04M1/72502	379/102.03
*	B	US-7,639,157 B1	12-2009	Whitley; Kevin T.	G08C17/02	340/870.02
*	C	US-7,213,061 B1	05-2007	Hite; Thomas D.	H04L12/2803	361/803
	D	US-				
	E	US-				
	F	US-				
	G	US-				
	H	US-				
	I	US-				
	J	US-				
	K	US-				
	L	US-				
	M	US-				

FOREIGN PATENT DOCUMENTS

*		Document Number Country Code-Number-Kind Code	Date MM-YYYY	Country	Name	CPC Classification
	N					
	O					
	P					
	Q					
	R					
	S					
	T					

NON-PATENT DOCUMENTS

*		Include as applicable: Author, Title Date, Publisher, Edition or Volume, Pertinent Pages)
	U	
	V	
	W	
	X	

*A copy of this reference is not being furnished with this Office action. (See MPEP § 707.05(a).)
Dates in MM-YYYY format are publication dates. Classifications may be US or foreign.

Issue Classification	Application/Control No.	Applicant(s)/Patent Under Reexamination
	10911211	RAO ET AL.
	Examiner	**Art Unit**
	AJIT PATEL	2644

CPC						
Symbol					**Type**	**Version**
H04M		1	/	72533	F	2013-01-01
H04M		11	/	007	I	2013-01-01
G08C		17	/	02	I	2013-01-01
H04L		12	/	2803	I	2013-01-01
			/			
			/			
			/			
			/			
			/			
			/			
			/			
			/			
			/			
			/			
			/			

CPC Combination Sets							
Symbol				**Type**	**Set**	**Ranking**	**Version**
			/				
			/				

NONE (Assistant Examiner)	(Date)	**Total Claims Allowed:** 34	
/AJIT PATEL/ Primary Examiner.Art Unit 2644 (Primary Examiner)	4/1/2017 (Date)	O.G. Print Claim(s) 1	O.G. Print Figure 2A

Issue Classification	Application/Control No.	Applicant(s)/Patent Under Reexamination
	10911211	RAO ET AL.
	Examiner	**Art Unit**
	AJIT PATEL	2644

US ORIGINAL CLASSIFICATION		INTERNATIONAL CLASSIFICATION										
CLASS	SUBCLASS	CLAIMED					NON-CLAIMED					
455	432.3	H	0	4	W	4 / 00 (2009.01.01)						
CROSS REFERENCE(S)												
CLASS	SUBCLASS (ONE SUBCLASS PER BLOCK)											

NONE (Assistant Examiner) (Date)	**Total Claims Allowed:** 34	
/AJIT PATEL/ Primary Examiner.Art Unit 2644 4/1/2017 (Primary Examiner) (Date)	O.G. Print Claim(s) 1	O.G. Print Figure 2A

Issue Classification	Application/Control No.	Applicant(s)/Patent Under Reexamination
	10911211	RAO ET AL.
	Examiner	**Art Unit**
	AJIT PATEL	2644

☐ Claims renumbered in the same order as presented by applicant ☐ CPA ☐ T.D. ☐ R.1.47

Final	Original	Final	Original	Final	Original	Final	Original	Final	Original	Final	Original	Final	Original	Final	Original
	1		17		33		49	26	65						
	2		18		34	12	50	27	66						
	3		19		35	13	51		67						
	4		20	1	36	14	52	28	68						
	5		21		37	15	53	29	69						
	6		22		38	16	54	30	70						
	7		23	2	39	17	55	31	71						
	8		24	3	40	18	56	32	72						
	9		25	4	41	19	57	33	73						
	10		26	5	42	20	58	34	74						
	11		27	6	43		59								
	12		28	7	44	21	60								
	13		29	8	45	22	61								
	14		30	9	46	23	62								
	15		31	10	47	24	63								
	16		32	11	48	25	64								

NONE (Assistant Examiner)	(Date)	**Total Claims Allowed:** 34	
/AJIT PATEL/ Primary Examiner.Art Unit 2644 (Primary Examiner)	4/1/2017 (Date)	O.G. Print Claim(s) 1	O.G. Print Figure 2A

EAST Search History

EAST Search History (Prior Art)

Ref #	Hits	Search Query	DBs	Default Operator	Plurals	Time Stamp
L3	57858	(H04M1/72533 OR H04M1/725 OR H04M1/6041 OR H04M1/6058 OR H04M/2250/74 OR G08C17/02 OR H04L12/2803 OR H04L29/08567 OR H04M11/007).CPC.	US-PGPUB; USPAT; USOCR; FPRS; EPO; JPO; DERWENT; IBM_TDB	OR	ON	2017/04/01 15:13
L4	9753	3 and @ad<"20000609"	US-PGPUB; USPAT; USOCR; FPRS; EPO; JPO; DERWENT; IBM_TDB	OR	ON	2017/04/01 15:14
L5	263	4 and (phone or wireless or mobile) same (remote adj control)	US-PGPUB; USPAT; USOCR; FPRS; EPO; JPO; DERWENT; IBM_TDB	OR	ON	2017/04/01 15:16
L6	263	4 and ((phone or wireless or mobile) same (remote adj control))	US-PGPUB; USPAT; USOCR; FPRS; EPO; JPO; DERWENT; IBM_TDB	OR	ON	2017/04/01 15:16
L7	10	6 and ((download$4 or upload$4) same (server))	US-PGPUB; USPAT; USOCR; FPRS; EPO; JPO; DERWENT; IBM_TDB	OR	ON	2017/04/01 15:17
L8	0	7 and ((dynamically or variable) same (bandwidth or frequenc$5))	US-PGPUB; USPAT; USOCR; FPRS; EPO; JPO; DERWENT; IBM_TDB	OR	ON	2017/04/01 15:19
L9	36	("4101872" | "4577182" | "4614945" | "4691341" | "4713837" | "4724435" | "4799059" | "4940976" | "5056107" | "5146486" | "5194860" | "5243644" | "5327478" | "5438329" | "5442341" | "5448230" | "5454024" | "5544036" | "5546444" | "5548633" | "5572438" | "5594740" | "5617084" | "5673252" | "5699276" | "5717718" | "5719563" |	US-PGPUB; USPAT; USOCR	OR	OFF	2017/04/01 15:23

		"5719564" | "5719918" | "5729197" | "5745849" | "5748084" | "5748103" | "5748104" | "5897607" | "6014089").PN.				

EAST Search History (Interference)

Ref #	Hits	Search Query	DBs	Default Operator	Plurals	Time Stamp
L10	17	((mobile adj device) same upload same software same server).clm.	US-PGPUB; USPAT	OR	ON	2017/04/01 15:28
L11	0	((mobile or $4phone) same (noise adj ratio) same frequenc$5 same tunable).clm.	US-PGPUB; USPAT	OR	ON	2017/04/01 15:30
L12	2	((mobile or $4phone) same power same level same bandwidth same dynamically).clm.	US-PGPUB; USPAT	OR	ON	2017/04/01 15:31
L13	0	10 and 12	US-PGPUB; USPAT	OR	ON	2017/04/01 15:31
L14	0	((wireless or mobile or $4phone) same command same televison same IP same software same (voice with actuat$4)).clm.	US-PGPUB; USPAT	OR	ON	2017/04/01 15:34

4/ 1/ 2017 3:35:48 PM
C:\ Users\ apatel\ Documents\ EAST\ Workspaces\ Default EAST Workspace 1600x1200.wsp

Search Notes	Application/Control No.	Applicant(s)/Patent Under Reexamination
	10911211	RAO ET AL.
	Examiner	Art Unit
	DAVID WANG	2617

CPC- SEARCHED		
Symbol	Date	Examiner
H04M 1/72533,1/725,1/6041,1/6058,2250/74;11/007	4/1/2017	AP
G08C 17/02	4/1/2017	AP
H04L 12/2803,29/08567	4/1/2017	AP

CPC COMBINATION SETS - SEARCHED		
Symbol	Date	Examiner

US CLASSIFICATION SEARCHED			
Class	Subclass	Date	Examiner
455	461	3/14/2008	DW
709	221	3/14/2008	DW
710	104	3/14/2008	DW

SEARCH NOTES		
Search Notes	Date	Examiner
please see attached	3/14/2008	DW
consulted Duc Nguyen SPE regarding the use of the Logitech Harmony remote controller	3/11/2008	DW
google search for "(buy OR purchase) applications from mobile phone"	12/3/2010	DW
google search for "finding network with GPS location" and "(detecting OR sensing) (home OR office OR work) environment GPS"	12/9/2010	DW
consulted Huy Phan	12/9/2010	DW
Search East see attached.		
Updated search	4/17/2016	AP
Updated search	4/1/2017	AP

INTERFERENCE SEARCH

US Class/ CPC Symbol	US Subclass / CPC Group	Date	Examiner
	See EAST for interference search	4/1/2017	AP

PART B - FEE(S) TRANSMITTAL

Complete and send this form, together with applicable fee(s), to: Mail **Mail Stop ISSUE FEE**
Commissioner for Patents
P.O. Box 1450
Alexandria, Virginia 22313-1450
or Fax (571)-273-2885

INSTRUCTIONS: This form should be used for transmitting the ISSUE FEE and PUBLICATION FEE (if required). Blocks 1 through 5 should be completed where appropriate. All further correspondence including the Patent, advance orders and notification of maintenance fees will be mailed to the current correspondence address as indicated unless corrected below or directed otherwise in Block 1, by (a) specifying a new correspondence address; and/or (b) indicating a separate "FEE ADDRESS" for maintenance fee notifications.

CURRENT CORRESPONDENCE ADDRESS (Note: Use Block 1 for any change of address)

105481 7590 04/06/2017
Rekha Rao
3087 Alexis Drive
Palo Alto, CA 94304

Note: A certificate of mailing can only be used for domestic mailings of the Fee(s) Transmittal. This certificate cannot be used for any other accompanying papers. Each additional paper, such as an assignment or formal drawing, must have its own certificate of mailing or transmission.

Certificate of Mailing or Transmission
I hereby certify that this Fee(s) Transmittal is being deposited with the United States Postal Service with sufficient postage for first class mail in an envelope addressed to the Mail Stop ISSUE FEE address above, or being facsimile transmitted to the USPTO (571) 273-2885, on the date indicated below.

Sanjay K. Rao	(Depositor's name)
/Sanjay K. Rao/	(Signature)
July 6, 2017	(Date)

APPLICATION NO.	FILING DATE	FIRST NAMED INVENTOR	ATTORNEY DOCKET NO.	CONFIRMATION NO.
10/911,211	10/13/2004	Sanjay K. Rao	IPHLNZ00501	7409

TITLE OF INVENTION: Multifunction Mobile Devices and Appliance Control

APPLN. TYPE	ENTITY STATUS	ISSUE FEE DUE	PUBLICATION FEE DUE	PREV. PAID ISSUE FEE	TOTAL FEE(S) DUE	DATE DUE
nonprovisional	SMALL	$480	$0	$0	$480	07/06/2017

EXAMINER	ART UNIT	CLASS-SUBCLASS
PATEL, AJIT	2644	455-432300

1. Change of correspondence address or indication of "Fee Address" (37 CFR 1.363).
☐ Change of correspondence address (or Change of Correspondence Address form PTO/SB/122) attached.
☐ "Fee Address" indication (or "Fee Address" Indication form PTO/SB/47; Rev 03-02 or more recent) attached. **Use of a Customer Number is required.**

2. For printing on the patent front page, list
(1) The names of up to 3 registered patent attorneys or agents OR, alternatively,
(2) The name of a single firm (having as a member a registered attorney or agent) and the names of up to 2 registered patent attorneys or agents. If no name is listed, no name will be printed.
1 _____
2 _____
3 _____

3. ASSIGNEE NAME AND RESIDENCE DATA TO BE PRINTED ON THE PATENT (print or type)

PLEASE NOTE: Unless an assignee is identified below, no assignee data will appear on the patent. If an assignee is identified below, the document has been filed for recordation as set forth in 37 CFR 3.11. Completion of this form is NOT a substitute for filing an assignment.

(A) NAME OF ASSIGNEE (B) RESIDENCE: (CITY and STATE OR COUNTRY)

Please check the appropriate assignee category or categories (will not be printed on the patent) : ☐ Individual ☐ Corporation or other private group entity ☐ Government

4a. The following fee(s) are submitted:
☒ Issue Fee
☐ Publication Fee (No small entity discount permitted)
☐ Advance Order - # of Copies _____

4b. Payment of Fee(s): **(Please first reapply any previously paid issue fee shown above)**
☐ A check is enclosed.
☒ Payment by credit card. Form PTO-2038 is attached.
☐ The director is hereby authorized to charge the required fee(s), any deficiency, or credits any overpayment, to Deposit Account Number _____ (enclose an extra copy of this form).

5. **Change in Entity Status** (from status indicated above)
☐ Applicant certifying micro entity status. See 37 CFR 1.29
NOTE: Absent a valid certification of Micro Entity Status (see forms PTO/SB/15A and 15B), issue fee payment in the micro entity amount will not be accepted at the risk of application abandonment.
☐ Applicant asserting small entity status. See 37 CFR 1.27
NOTE: If the application was previously under micro entity status, checking this box will be taken to be a notification of loss of entitlement to micro entity status.
☐ Applicant changing to regular undiscounted fee status.
NOTE: Checking this box will be taken to be a notification of loss of entitlement to small or micro entity status, as applicable.

NOTE: This form must be signed in accordance with 37 CFR 1.31 and 1.33. See 37 CFR 1.4 for signature requirements and certifications.

Authorized Signature /Sanjay K. Rao/ Date July 6, 2017
Typed or printed name Sanjay K. Rao Registration No. _____

PTOL-85 Part B (10-13) Approved for use through 10/31/2013. OMB 0651-0033 U.S. Patent and Trademark Office; U.S. DEPARTMENT OF COMMERCE

PART B - FEE(S) TRANSMITTAL

Complete and send this form, together with applicable fee(s), to: Mail **Mail Stop ISSUE FEE**
Commissioner for Patents
P.O. Box 1450
Alexandria, Virginia 22313-1450
or Fax (571)-273-2885

INSTRUCTIONS: This form should be used for transmitting the ISSUE FEE and PUBLICATION FEE (if required). Blocks 1 through 5 should be completed where appropriate. All further correspondence including the Patent, advance orders and notification of maintenance fees will be mailed to the current correspondence address as indicated unless corrected below or directed otherwise in Block 1, by (a) specifying a new correspondence address; and/or (b) indicating a separate "FEE ADDRESS" for maintenance fee notifications.

CURRENT CORRESPONDENCE ADDRESS (Note: Use Block 1 for any change of address)

105481 7590 04/06/2017
Rekha Rao
3087 Alexis Drive
Palo Alto, CA 94304

Note: A certificate of mailing can only be used for domestic mailings of the Fee(s) Transmittal. This certificate cannot be used for any other accompanying papers. Each additional paper, such as an assignment or formal drawing, must have its own certificate of mailing or transmission.

Certificate of Mailing or Transmission
I hereby certify that this Fee(s) Transmittal is being deposited with the United States Postal Service with sufficient postage for first class mail in an envelope addressed to the Mail Stop ISSUE FEE address above, or being facsimile transmitted to the USPTO (571) 273-2885, on the date indicated below.

Sunil K. Rao	(Depositor's name)
/Sunil K. Rao/	(Signature)
July 06, 2017	(Date)

APPLICATION NO.	FILING DATE	FIRST NAMED INVENTOR	ATTORNEY DOCKET NO.	CONFIRMATION NO.
10/911,211	10/13/2004	Sanjay K. Rao	IPHLNZ00501	7409

TITLE OF INVENTION: Multifunction Mobile Devices and Appliance Control

APPLN. TYPE	ENTITY STATUS	ISSUE FEE DUE	PUBLICATION FEE DUE	PREV. PAID ISSUE FEE	TOTAL FEE(S) DUE	DATE DUE
nonprovisional	SMALL	$480	$0	$0	$480	07/06/2017

EXAMINER	ART UNIT	CLASS-SUBCLASS
PATEL, AJIT	2644	455-432300

1. Change of correspondence address or indication of "Fee Address" (37 CFR 1.363).
☐ Change of correspondence address (or Change of Correspondence Address form PTO/SB/122) attached.
☐ "Fee Address" indication (or "Fee Address" Indication form PTO/SB/47; Rev 03-02 or more recent) attached. **Use of a Customer Number is required.**

2. For printing on the patent front page, list
(1) The names of up to 3 registered patent attorneys or agents OR, alternatively,
(2) The name of a single firm (having as a member a registered attorney or agent) and the names of up to 2 registered patent attorneys or agents. If no name is listed, no name will be printed.
1 _____
2 _____
3 _____

3. ASSIGNEE NAME AND RESIDENCE DATA TO BE PRINTED ON THE PATENT (print or type)

PLEASE NOTE: Unless an assignee is identified below, no assignee data will appear on the patent. If an assignee is identified below, the document has been filed for recordation as set forth in 37 CFR 3.11. Completion of this form is NOT a substitute for filing an assignment.

(A) NAME OF ASSIGNEE (B) RESIDENCE: (CITY and STATE OR COUNTRY)

Please check the appropriate assignee category or categories (will not be printed on the patent) : ☐ Individual ☐ Corporation or other private group entity ☐ Government

4a. The following fee(s) are submitted:
☒ Issue Fee
☐ Publication Fee (No small entity discount permitted)
☐ Advance Order - # of Copies _____

4b. Payment of Fee(s): **(Please first reapply any previously paid issue fee shown above)**
☐ A check is enclosed.
☒ Payment by credit card. Form PTO-2038 is attached.
☐ The director is hereby authorized to charge the required fee(s), any deficiency, or credits any overpayment, to Deposit Account Number _____ (enclose an extra copy of this form).

5. **Change in Entity Status** (from status indicated above)
☐ Applicant certifying micro entity status. See 37 CFR 1.29
NOTE: Absent a valid certification of Micro Entity Status (see forms PTO/SB/15A and 15B), issue fee payment in the micro entity amount will not be accepted at the risk of application abandonment.
☐ Applicant asserting small entity status. See 37 CFR 1.27
NOTE: If the application was previously under micro entity status, checking this box will be taken to be a notification of loss of entitlement to micro entity status.
☐ Applicant changing to regular undiscounted fee status.
NOTE: Checking this box will be taken to be a notification of loss of entitlement to small or micro entity status, as applicable.

NOTE: This form must be signed in accordance with 37 CFR 1.31 and 1.33. See 37 CFR 1.4 for signature requirements and certifications.

Authorized Signature /Sunil K. Rao/ Date _____
Typed or printed name Sunil K. Rao Registration No. _____

PTOL-85 Part B (10-13) Approved for use through 10/31/2013. OMB 0651-0033 U.S. Patent and Trademark Office; U.S. DEPARTMENT OF COMMERCE

Electronic Patent Application Fee Transmittal

Application Number:	10911211
Filing Date:	13-Oct-2004
Title of Invention:	Multifunction Mobile Devices and Appliance Control
First Named Inventor/Applicant Name:	Sanjay K. Rao
Filer:	Rekha Kaliputnam Rao/Sanjay Rao
Attorney Docket Number:	IPHLNZ00501

Filed as Small Entity

Filing Fees for Utility under 35 USC 111(a)

Description	Fee Code	Quantity	Amount	Sub-Total in USD($)
Basic Filing:				
Pages:				
Claims:				
Miscellaneous-Filing:				
Petition:				
Patent-Appeals-and-Interference:				
Post-Allowance-and-Post-Issuance:				
UTILITY APPL ISSUE FEE	2501	1	480	480

Description	Fee Code	Quantity	Amount	Sub-Total in USD($)
Extension-of-Time:				
Miscellaneous:				
		Total in USD ($)		**480**

Electronic Acknowledgement Receipt

EFS ID:	29710906
Application Number:	10911211
International Application Number:	
Confirmation Number:	7409
Title of Invention:	Multifunction Mobile Devices and Appliance Control
First Named Inventor/Applicant Name:	Sanjay K. Rao
Customer Number:	105481
Filer:	Rekha Kaliputnam Rao/Sanjay Rao
Filer Authorized By:	Rekha Kaliputnam Rao
Attorney Docket Number:	IPHLNZ00501
Receipt Date:	06-JUL-2017
Filing Date:	13-OCT-2004
Time Stamp:	22:51:28
Application Type:	Utility under 35 USC 111(a)

Payment information:

Submitted with Payment	yes
Payment Type	CARD
Payment was successfully received in RAM	$480
RAM confirmation Number	070717INTEFSW22553600
Deposit Account	
Authorized User	
The Director of the USPTO is hereby authorized to charge indicated fees and credit any overpayment as follows:	

File Listing:

Document Number	Document Description	File Name	File Size(Bytes)/ Message Digest	Multi Part /.zip	Pages (if appl.)
1	Amendment after Notice of Allowance (Rule 312)	312Amendment.pdf	288604 2fa5c40712959d33ea599d5bf07779d8d27241ab	no	4
Warnings:					
Information:					
2	Application Data Sheet	ADS_MARKEDUP.pdf	1189109 89a44c35a0623da022119902deac1ee35d21051a	no	5
Warnings:					
Information:					
This is not an USPTO supplied ADS fillable form					
3	Application Data Sheet	aia0014.pdf	1823060 a6943bb0dbb36bab8b834da1d74f025132956ff1	no	11
Warnings:					
Information:					
4	Issue Fee Payment (PTO-85B)	NOA_PRINT.pdf	108415 078409524024779ea21b5792a68235880f5426e5	no	1
Warnings:					
Information:					
5	Issue Fee Payment (PTO-85B)	NOA_PRINT2.pdf	107900 d6069de15d64c0bf094760e18e727102ba37c412	no	1
Warnings:					
Information:					
6	Fee Worksheet (SB06)	fee-info.pdf	30639 4b261ef06f1bb92e5ca027bc13c81e16cef3bc64	no	2
Warnings:					

Information:	
Total Files Size (in bytes):	3547727

This Acknowledgement Receipt evidences receipt on the noted date by the USPTO of the indicated documents, characterized by the applicant, and including page counts, where applicable. It serves as evidence of receipt similar to a Post Card, as described in MPEP 503.

New Applications Under 35 U.S.C. 111

If a new application is being filed and the application includes the necessary components for a filing date (see 37 CFR 1.53(b)-(d) and MPEP 506), a Filing Receipt (37 CFR 1.54) will be issued in due course and the date shown on this Acknowledgement Receipt will establish the filing date of the application.

National Stage of an International Application under 35 U.S.C. 371

If a timely submission to enter the national stage of an international application is compliant with the conditions of 35 U.S.C. 371 and other applicable requirements a Form PCT/DO/EO/903 indicating acceptance of the application as a national stage submission under 35 U.S.C. 371 will be issued in addition to the Filing Receipt, in due course.

New International Application Filed with the USPTO as a Receiving Office

If a new international application is being filed and the international application includes the necessary components for an international filing date (see PCT Article 11 and MPEP 1810), a Notification of the International Application Number and of the International Filing Date (Form PCT/RO/105) will be issued in due course, subject to prescriptions concerning national security, and the date shown on this Acknowledgement Receipt will establish the international filing date of the application.

I hereby certify that this correspondence is being electronically transmitted to the USPTO on the date shown below.

Date: July 06, 2017 Signature: /Sanjay K. Rao/ (Sanjay K. Rao)

IN THE UNITED STATES PATENT AND TRADEMARK OFFICE

Application No.:	10/911,211
Confirmation No.:	7409
Filing Date:	October 13, 2004
Inventor(s):	Sanjay K. Rao et al.
Title:	Multifunction Mobile Devices and Appliance Control
Examiner:	AJIT PATEL
Group Art Unit:	7409

AMENDMENT UNDER 37 C.F.R. §3.12 AND ISSUE FEE

Mail Stop Amendments
Commissioner for Patents
P.O. Box 1450
Alexandria, VA 22313-1450

Dear Examiner Patel:

Prior to issuance, entry of this Amendment is respectfully requested. A notice of allowance was issued on April 06, 2017 for which a response is due July 06, 2017. Accordingly, this response is timely filed. Applicants have amended the priority claim which is reflected in an updated ADS which accompanies this paper.

Amendments to the **specification** begin on Page 2.

IN THE SPECIFICATION:

On page 1, please amend the "CROSS REFERENCE TO RELATED APPLICATIONS" paragraph beginning on line 9 as follows:

The present application is a divisional of U.S. Application No. 09/591,381 filed June 9, 2000 (now U.S. Patent No. 7,929,950) ~~which is a continuation-in-part of copending application entitled INTELLIGENT KEYBOARD SYSTEM, Serial No. 09/281,739 filed June 4, 1999 (now U.S. Patent No. 6,169,789)~~.

REMARKS

The application has received a Notice of Allowance. Claims 36 and 39-74 are allowed. No changes to the Claims have been made subsequent to the Examiner's Amendment. No new matter has been added.

Applicants have revised their claim to domestic priority. As originally filed, the application claimed priority through a chain of applications back to December 16, 1996 and to Serial No. 09/281,739 filed June 4, 1999 (now U.S. Patent No. 6,169,789).

At this time, the claim to priority has been truncated to the immediate parent of the present application, which was filed on June 9, 2000 (now U.S. Patent No. 7,929,950). An Application Data Sheet accompanies this Amendment, to reflect this change.

Applicants thank the Examiner for his indication that all of claims are allowed. The changes made herein are not believed to affect allowability. In particular it is noted that in his search strategy and search history, the Examiner has apparently already used a search date of June 09, 2000 such that the above truncation of the domestic priority claim should not affect allowability. See, for example, the Level 4 search ("L4") in the search history of 04/01/2017, which includes the search string of @ad< "20000609", which is understood to signify a search for documents having an application filing date before June 9, 2000.

No other matters being raised, it is believed the entire application is fully in condition for allowance, and such action is courteously solicited.

No fees are believed due. However, should it be determined that processing of this paper requires additional fees under 37 C.F.R. 1.16 or 1.17, the Director is hereby authorized to charge such fees to **Deposit Account No. 506155**.

Respectfully submitted,

/ Sanjay K Rao/

Sanjay Rao, Joint Inventor

/ Sunil K. Rao/

Sanjay Rao, Joint Inventor

/ Rekha Rao/

Legal Representative for Joint Inventor,
Raman K. Rao

Ex.1002
APPLE INC. / Page 576 of 610

PTO/SB/14 (11-08)
Approved for use through 04/30/2017. OMB 0651-0032
U.S. Patent and Trademark Office; U.S. DEPARTMENT OF COMMERCE
Under the Paperwork Reduction Act of 1995, no persons are required to respond to a collection of information unless it contains a valid OMB control number.

Application Data Sheet 37 CFR 1.76	Attorney Docket Number	
	Application Number	
Title of Invention	Multifunction Mobile Device and Appliance Control	

The application data sheet is part of the provisional or nonprovisional application for which it is being submitted. The following form contains the bibliographic data arranged in a format specified by the United States Patent and Trademark Office as outlined in 37 CFR 1.76.
This document may be completed electronically and submitted to the Office in electronic format using the Electronic Filing System (EFS) or the document may be printed and included in a paper filed application.

Secrecy Order 37 CFR 5.2

☐ Portions or all of the application associated with this Application Data Sheet may fall under a Secrecy Order pursuant to 37 CFR 5.2 (Paper filers only. Applications that fall under Secrecy Order may not be filed electronically.)

Applicant Information:

Applicant 1

Applicant Authority	◉ Inventor	◯ Legal Representative under 35 U.S.C. 117	◯ Party of Interest under 35 U.S.C. 118

Prefix	Given Name	Middle Name	Family Name	Suffix
	Sanjay	K	Rao	

Residence Information (Select One) ◉ US Residency ◯ Non US Residency ◯ Active US Military Service

City	Palo Alto	State/Province	CA	Country of Residence	US

Citizenship under 37 CFR 1.41(b)	US

Mailing Address of Applicant:

Address 1	3087 Alexis Drive
Address 2	

City	Palo Alto	State/Province	CA
Postal Code	94304	Country	US

Applicant 2

Applicant Authority	◉ Inventor	◯ Legal Representative under 35 U.S.C. 117	◯ Party of Interest under 35 U.S.C. 118

Prefix	Given Name	Middle Name	Family Name	Suffix
	Sunil	K.	Rao	

Residence Information (Select One) ◉ US Residency ◯ Non US Residency ◯ Active US Military Service

City	Palo Alto	State/Province	CA	Country of Residence	US

Citizenship under 37 CFR 1.41(b)	US

Mailing Address of Applicant:

Address 1	3087 Alexis Drive
Address 2	

City	Palo Alto	State/Province	CA
Postal Code	94304	Country	US

Applicant 3

Applicant Authority	◉ Inventor	◯ Legal Representative under 35 U.S.C. 117	◯ Party of Interest under 35 U.S.C. 118

Prefix	Given Name	Middle Name	Family Name	Suffix
	Raman	K.	Rao	

Residence Information (Select One) ◉ US Residency ◯ Non US Residency ◯ Active US Military Service

City	Palo Alto	State/Province	CA	Country of Residence	US

PTO/SB/14 (11-08)
Approved for use through 04/30/2017. OMB 0651-0032
U.S. Patent and Trademark Office; U.S. DEPARTMENT OF COMMERCE
Under the Paperwork Reduction Act of 1995, no persons are required to respond to a collection of information unless it contains a valid OMB control number.

Application Data Sheet 37 CFR 1.76	Attorney Docket Number	
	Application Number	
Title of Invention	Multifunction Mobile Device and Appliance Control	

Citizenship under 37 CFR 1.41(b)	US		
Mailing Address of Applicant:			
Address 1	3087 Alexis Drive		
Address 2			
City	Palo Alto	**State/Province**	CA
Postal Code	94304	**Country**	US

All Inventors Must Be Listed - Additional Inventor Information blocks may be generated within this form by selecting the **Add** button. Add

Correspondence Information:

Enter either Customer Number or complete the Correspondence Information section below.
For further information see 37 CFR 1.33(a).

☐ **An Address is being provided for the correspondence Information of this application.**

Customer Number	105481		
Email Address	patent@ipholdings.com	Add Email	Remove Email

Application Information:

Title of the Invention	Multifunction Mobile Device and Appliance Control		
Attorney Docket Number		**Small Entity Status Claimed**	☒
Application Type	Nonprovisional		
Subject Matter	Utility		
Suggested Class (if any)		**Sub Class (if any)**	
Suggested Technology Center (if any)			
Total Number of Drawing Sheets (if any)	5	**Suggested Figure for Publication (if any)**	

Publication Information:

☐ Request Early Publication (Fee required at time of Request 37 CFR 1.219)

☐ **Request Not to Publish.** I hereby request that the attached application not be published under 35 U.S. C. 122(b) and certify that the invention disclosed in the attached application **has not and will not** be the subject of an application filed in another country, or under a multilateral international agreement, that requires publication at eighteen months after filing.

Representative Information:

Representative information should be provided for all practitioners having a power of attorney in the application. Providing this information in the Application Data Sheet does not constitute a power of attorney in the application (see 37 CFR 1.32).
Enter either Customer Number or complete the Representative Name section below. If both sections are completed the Customer Number will be used for the Representative Information during processing.

Please Select One:	◉ Customer Number	○ US Patent Practitioner	○ Limited Recognition (37 CFR 11.9)

PTO/SB/14 (11-08)
Approved for use through 04/30/2017. OMB 0651-0032
U.S. Patent and Trademark Office; U.S. DEPARTMENT OF COMMERCE
Under the Paperwork Reduction Act of 1995, no persons are required to respond to a collection of information unless it contains a valid OMB control number.

Application Data Sheet 37 CFR 1.76	Attorney Docket Number	
	Application Number	
Title of Invention	Multifunction Mobile Device and Appliance Control	

Customer Number	105481

Domestic Benefit/National Stage Information:

This section allows for the applicant to either claim benefit under 35 U.S.C. 119(e), 120, 121, or 365(c) or indicate National Stage entry from a PCT application. Providing this information in the application data sheet constitutes the specific reference required by 35 U.S.C. 119(e) or 120, and 37 CFR 1.78(a)(2) or CFR 1.78(a)(4), and need not otherwise be made part of the specification.

Prior Application Status	Patented			Remove	
Application Number	Continuity Type	Prior Application Number	Filing Date (YYYY-MM-DD)	Patent Number	Issue Date (YYYY-MM-DD)
	Division of	09591381	2000-06-09	7929950	2011-04-19
Prior Application Status	Patented			Remove	
Application Number	Continuity Type	Prior Application Number	Filing Date (YYYY-MM-DD)	Patent Number	Issue Date (YYYY-MM-DD)
~~09591381~~	~~Continuation in part of~~	~~09281739~~	~~1999-06-04~~	~~6169789~~	~~2001-01-02~~

Additional Domestic Benefit/National Stage Data may be generated within this form by selecting the **Add** button.

Foreign Priority Information:

This section allows for the applicant to claim benefit of foreign priority and to identify any prior foreign application for which priority is not claimed. Providing this information in the application data sheet constitutes the claim for priority as required by 35 U.S.C. 119(b) and 37 CFR 1.55(a).

			Remove
Application Number	Country[i]	Parent Filing Date (YYYY-MM-DD)	Priority Claimed
			◉ Yes ○ No

Additional Foreign Priority Data may be generated within this form by selecting the **Add** button.

Assignee Information:

Providing this information in the application data sheet does not substitute for compliance with any requirement of part 3 of Title 37 of the CFR to have an assignment recorded in the Office.

Assignee 1

If the Assignee is an Organization check here. ☐

Prefix	**Given Name**	Middle Name	**Family Name**	Suffix

Mailing Address Information:

Address 1			
Address 2			
City		**State/Province**	
Country[i]		Postal Code	
Phone Number		Fax Number	
Email Address			

PTO/SB/14 (11-08)
Approved for use through 04/30/2017. OMB 0651-0032
U.S. Patent and Trademark Office; U.S. DEPARTMENT OF COMMERCE
Under the Paperwork Reduction Act of 1995, no persons are required to respond to a collection of information unless it contains a valid OMB control number.

Application Data Sheet 37 CFR 1.76	Attorney Docket Number	
	Application Number	
Title of Invention	Multifunction Mobile Device and Appliance Control	

Additional Assignee Data may be generated within this form by selecting the **Add** button.

Signature:

A signature of the applicant or representative is required in accordance with 37 CFR 1.33 and 10.18. Please see 37 CFR 1.4(d) for the form of the signature.

Signature	/Sanjay K. Rao/			Date (YYYY-MM-DD)	2017-07-06
First Name	Sanjay	Last Name	Rao	Registration Number	

This collection of information is required by 37 CFR 1.76. The information is required to obtain or retain a benefit by the public which is to file (and by the USPTO to process) an application. Confidentiality is governed by 35 U.S.C. 122 and 37 CFR 1.14. This collection is estimated to take 23 minutes to complete, including gathering, preparing, and submitting the completed application data sheet form to the USPTO. Time will vary depending upon the individual case. Any comments on the amount of time you require to complete this form and/or suggestions for reducing this burden, should be sent to the Chief Information Officer, U.S. Patent and Trademark Office, U.S. Department of Commerce, P.O. Box 1450, Alexandria, VA 22313-1450. DO NOT SEND FEES OR COMPLETED FORMS TO THIS ADDRESS. **SEND TO: Commissioner for Patents, P.O. Box 1450, Alexandria, VA 22313-1450.**

Privacy Act Statement

The Privacy Act of 1974 (P.L. 93-579) requires that you be given certain information in connection with your submission of the attached form related to a patent application or patent. Accordingly, pursuant to the requirements of the Act, please be advised that: (1) the general authority for the collection of this information is 35 U.S.C. 2(b)(2); (2) furnishing of the information solicited is voluntary; and (3) the principal purpose for which the information is used by the U.S. Patent and Trademark Office is to process and/or examine your submission related to a patent application or patent. If you do not furnish the requested information, the U.S. Patent and Trademark Office may not be able to process and/or examine your submission, which may result in termination of proceedings or abandonment of the application or expiration of the patent.

The information provided by you in this form will be subject to the following routine uses:

1. The information on this form will be treated confidentially to the extent allowed under the Freedom of Information Act (5 U.S.C. 552) and the Privacy Act (5 U.S.C. 552a). Records from this system of records may be disclosed to the Department of Justice to determine whether the Freedom of Information Act requires disclosure of these records.

2. A record from this system of records may be disclosed, as a routine use, in the course of presenting evidence to a court, magistrate, or administrative tribunal, including disclosures to opposing counsel in the course of settlement negotiations.

3. A record in this system of records may be disclosed, as a routine use, to a Member of Congress submitting a request involving an individual, to whom the record pertains, when the individual has requested assistance from the Member with respect to the subject matter of the record.

4. A record in this system of records may be disclosed, as a routine use, to a contractor of the Agency having need for the information in order to perform a contract. Recipients of information shall be required to comply with the requirements of the Privacy Act of 1974, as amended, pursuant to 5 U.S.C. 552a(m).

5. A record related to an International Application filed under the Patent Cooperation Treaty in this system of records may be disclosed, as a routine use, to the International Bureau of the World Intellectual Property Organization, pursuant to the Patent Cooperation Treaty.

6. A record in this system of records may be disclosed, as a routine use, to another federal agency for purposes of National Security review (35 U.S.C. 181) and for review pursuant to the Atomic Energy Act (42 U.S.C. 218(c)).

7. A record from this system of records may be disclosed, as a routine use, to the Administrator, General Services, or his/her designee, during an inspection of records conducted by GSA as part of that agency's responsibility to recommend improvements in records management practices and programs, under authority of 44 U.S.C. 2904 and 2906. Such disclosure shall be made in accordance with the GSA regulations governing inspection of records for this purpose, and any other relevant (i.e., GSA or Commerce) directive. Such disclosure shall not be used to make determinations about individuals.

8. A record from this system of records may be disclosed, as a routine use, to the public after either publication of the application pursuant to 35 U.S.C. 122(b) or issuance of a patent pursuant to 35 U.S.C. 151. Further, a record may be disclosed, subject to the limitations of 37 CFR 1.14, as a routine use, to the public if the record was filed in an application which became abandoned or in which the proceedings were terminated and which application is referenced by either a published application, an application open to public inspections or an issued patent.

9. A record from this system of records may be disclosed, as a routine use, to a Federal, State, or local law enforcement agency, if the USPTO becomes aware of a violation or potential violation of law or regulation.

PTO/AIA/14 (11-15)
Approved for use through 04/30/2017. OMB 0651-0032
U.S. Patent and Trademark Office; U.S. DEPARTMENT OF COMMERCE
Under the Paperwork Reduction Act of 1995, no persons are required to respond to a collection of information unless it contains a valid OMB control number.

Application Data Sheet 37 CFR 1.76	Attorney Docket Number	
	Application Number	
Title of Invention	Multifunction Mobile Device and Appliance Control	

The application data sheet is part of the provisional or nonprovisional application for which it is being submitted. The following form contains the bibliographic data arranged in a format specified by the United States Patent and Trademark Office as outlined in 37 CFR 1.76.
This document may be completed electronically and submitted to the Office in electronic format using the Electronic Filing System (EFS) or the document may be printed and included in a paper filed application.

Secrecy Order 37 CFR 5.2:

☐ Portions or all of the application associated with this Application Data Sheet may fall under a Secrecy Order pursuant to 37 CFR 5.2 (Paper filers only. Applications that fall under Secrecy Order may not be filed electronically.)

Inventor Information:

Inventor 1 Remove

Legal Name

Prefix	Given Name	Middle Name	Family Name	Suffix
	Sanjay	K.	Rao	

Residence Information (Select One) ● US Residency Non US Residency Active US Military Service

City	Palo Alto	State/Province	CA	Country of Residence	US

Mailing Address of Inventor:

Address 1	3087 Alexis Drive		
Address 2			
City	Palo Alto	State/Province	CA
Postal Code	94304	Country	US

Inventor 2 Remove

Legal Name

Prefix	Given Name	Middle Name	Family Name	Suffix
	Sunil	K.	Rao	

Residence Information (Select One) ◉ US Residency Non US Residency Active US Military Service

City	Palo Alto	State/Province	CA	Country of Residence	US

Mailing Address of Inventor:

Address 1	3087 Alexis Drive		
Address 2			
City	Palo Alto	State/Province	CA
Postal Code	94304	Country	US

Inventor 3 Remove

Legal Name

Prefix	Given Name	Middle Name	Family Name	Suffix
	Raman	K.	Rao	

Residence Information (Select One) ◉ US Residency Non US Residency Active US Military Service

PTO/AIA/14 (11-15)
Approved for use through 04/30/2017. OMB 0651-0032
U.S. Patent and Trademark Office; U.S. DEPARTMENT OF COMMERCE
Under the Paperwork Reduction Act of 1995, no persons are required to respond to a collection of information unless it contains a valid OMB control number.

Application Data Sheet 37 CFR 1.76	Attorney Docket Number	
	Application Number	
Title of Invention	Multifunction Mobile Device and Appliance Control	

City	Palo Alto	State/Province	CA	Country of Residence	US

Mailing Address of Inventor:

Address 1	3087 Alexis Drive		
Address 2			
City	Palo Alto	State/Province	CA
Postal Code	94304	Country	US

All Inventors Must Be Listed - Additional Inventor Information blocks may be generated within this form by selecting the **Add** button. Add

Correspondence Information:

Enter either Customer Number or complete the Correspondence Information section below.
For further information see 37 CFR 1.33(a).

☐ **An Address is being provided for the correspondence Information of this application.**

Customer Number	105481		
Email Address	patent@ipholdings.com	Add Email	Remove Email

Application Information:

Title of the Invention	Multifunction Mobile Device and Appliance Control		
Attorney Docket Number		Small Entity Status Claimed	☒
Application Type	Nonprovisional		
Subject Matter			
Total Number of Drawing Sheets (if any)	5	Suggested Figure for Publication (if any)	

Filing By Reference:

Only complete this section when filing an application by reference under 35 U.S.C. 111(c) and 37 CFR 1.57(a). Do not complete this section if application papers including a specification and any drawings are being filed. Any domestic benefit or foreign priority information must be provided in the appropriate section(s) below (i.e., "Domestic Benefit/National Stage Information" and "Foreign Priority Information").

For the purposes of a filing date under 37 CFR 1.53(b), the description and any drawings of the present application are replaced by this reference to the previously filed application, subject to conditions and requirements of 37 CFR 1.57(a).

Application number of the previously filed application	Filing date (YYYY-MM-DD)	Intellectual Property Authority or Country

Publication Information:

☐ Request Early Publication (Fee required at time of Request 37 CFR 1.219)

☐ **Request Not to Publish.** I hereby request that the attached application not be published under 35 U.S.C. 122(b) and certify that the invention disclosed in the attached application **has not and will not** be the subject of an application filed in another country, or under a multilateral international agreement, that requires publication at eighteen months after filing.

PTO/AIA/14 (11-15)
Approved for use through 04/30/2017. OMB 0651-0032
U.S. Patent and Trademark Office; U.S. DEPARTMENT OF COMMERCE
Under the Paperwork Reduction Act of 1995, no persons are required to respond to a collection of information unless it contains a valid OMB control number.

Application Data Sheet 37 CFR 1.76	Attorney Docket Number	
	Application Number	
Title of Invention	Multifunction Mobile Device and Appliance Control	

Representative Information:

Representative information should be provided for all practitioners having a power of attorney in the application. Providing this information in the Application Data Sheet does not constitute a power of attorney in the application (see 37 CFR 1.32).
Either enter Customer Number or complete the Representative Name section below. If both sections are completed the customer Number will be used for the Representative Information during processing.

Please Select One:	● Customer Number	US Patent Practitioner	◯ Limited Recognition (37 CFR 11.9)
Customer Number			

Domestic Benefit/National Stage Information:

This section allows for the applicant to either claim benefit under 35 U.S.C. 119(e), 120, 121, 365(c), or 386(c) or indicate National Stage entry from a PCT application. Providing benefit claim information in the Application Data Sheet constitutes the specific reference required by 35 U.S.C. 119(e) or 120, and 37 CFR 1.78.
When referring to the current application, please leave the "Application Number" field blank.

Prior Application Status: Patented — Remove

Application Number	Continuity Type	Prior Application Number	Filing Date (YYYY-MM-DD)	Patent Number	Issue Date (YYYY-MM-DD)
	Division of	09591381	2000-06-09	7929950	2011-04-19

Additional Domestic Benefit/National Stage Data may be generated within this form by selecting the **Add** button. — Add

Foreign Priority Information:

This section allows for the applicant to claim priority to a foreign application. Providing this information in the application data sheet constitutes the claim for priority as required by 35 U.S.C. 119(b) and 37 CFR 1.55. When priority is claimed to a foreign application that is eligible for retrieval under the priority document exchange program (PDX)[i] the information will be used by the Office to automatically attempt retrieval pursuant to 37 CFR 1.55(i)(1) and (2). Under the PDX program, applicant bears the ultimate responsibility for ensuring that a copy of the foreign application is received by the Office from the participating foreign intellectual property office, or a certified copy of the foreign priority application is filed, within the time period specified in 37 CFR 1.55(g)(1).

Remove

Application Number	Country[i]	Filing Date (YYYY-MM-DD)	Access Code[i] (if applicable)

Additional Foreign Priority Data may be generated within this form by selecting the **Add** button. — Add

PTO/AIA/14 (11-15)
Approved for use through 04/30/2017. OMB 0651-0032
U.S. Patent and Trademark Office; U.S. DEPARTMENT OF COMMERCE
Under the Paperwork Reduction Act of 1995, no persons are required to respond to a collection of information unless it contains a valid OMB control number.

Application Data Sheet 37 CFR 1.76	Attorney Docket Number	
	Application Number	
Title of Invention	Multifunction Mobile Device and Appliance Control	

Statement under 37 CFR 1.55 or 1.78 for AIA (First Inventor to File) Transition Applications

☐ This application (1) claims priority to or the benefit of an application filed before March 16, 2013 and (2) also contains, or contained at any time, a claim to a claimed invention that has an effective filing date on or after March 16, 2013.
NOTE: By providing this statement under 37 CFR 1.55 or 1.78, this application, with a filing date on or after March 16, 2013, will be examined under the first inventor to file provisions of the AIA.

PTO/AIA/14 (11-15)
Approved for use through 04/30/2017. OMB 0651-0032
U.S. Patent and Trademark Office; U.S. DEPARTMENT OF COMMERCE
Under the Paperwork Reduction Act of 1995, no persons are required to respond to a collection of information unless it contains a valid OMB control number.

Application Data Sheet 37 CFR 1.76	Attorney Docket Number	
	Application Number	
Title of Invention	Multifunction Mobile Device and Appliance Control	

Authorization or Opt-Out of Authorization to Permit Access:

When this Application Data Sheet is properly signed and filed with the application, applicant has provided written authority to permit a participating foreign intellectual property (IP) office access to the instant application-as-filed (see paragraph A in subsection 1 below) and the European Patent Office (EPO) access to any search results from the instant application (see paragraph B in subsection 1 below).

Should applicant choose not to provide an authorization identified in subsection 1 below, applicant **must opt-out** of the authorization by checking the corresponding box A or B or both in subsection 2 below.

NOTE: This section of the Application Data Sheet is **ONLY** reviewed and processed with the **INITIAL** filing of an application. After the initial filing of an application, an Application Data Sheet cannot be used to provide or rescind authorization for access by a foreign IP office(s). Instead, Form PTO/SB/39 or PTO/SB/69 must be used as appropriate.

1. Authorization to Permit Access by a Foreign Intellectual Property Office(s)

A. Priority Document Exchange (PDX) - Unless box A in subsection 2 (opt-out of authorization) is checked, the undersigned hereby **grants the USPTO authority** to provide the European Patent Office (EPO), the Japan Patent Office (JPO), the Korean Intellectual Property Office (KIPO), the State Intellectual Property Office of the People's Republic of China (SIPO), the World Intellectual Property Organization (WIPO), and any other foreign intellectual property office participating with the USPTO in a bilateral or multilateral priority document exchange agreement in which a foreign application claiming priority to the instant patent application is filed, access to: (1) the instant patent application-as-filed and its related bibliographic data, (2) any foreign or domestic application to which priority or benefit is claimed by the instant application and its related bibliographic data, and (3) the date of filing of this Authorization. See 37 CFR 1.14(h)(1).

B. Search Results from U.S. Application to EPO - Unless box B in subsection 2 (opt-out of authorization) is checked, the undersigned hereby **grants the USPTO authority** to provide the EPO access to the bibliographic data and search results from the instant patent application when a European patent application claiming priority to the instant patent application is filed. See 37 CFR 1.14(h)(2).

The applicant is reminded that the EPO's Rule 141(1) EPC (European Patent Convention) requires applicants to submit a copy of search results from the instant application without delay in a European patent application that claims priority to the instant application.

2. Opt-Out of Authorizations to Permit Access by a Foreign Intellectual Property Office(s)

☐ A. Applicant **DOES NOT** authorize the USPTO to permit a participating foreign IP office access to the instant application-as-filed. If this box is checked, the USPTO will not be providing a participating foreign IP office with any documents and information identified in subsection 1A above.

☐ B. Applicant **DOES NOT** authorize the USPTO to transmit to the EPO any search results from the instant patent application. If this box is checked, the USPTO will not be providing the EPO with search results from the instant application.

NOTE: Once the application has published or is otherwise publicly available, the USPTO may provide access to the application in accordance with 37 CFR 1.14.

PTO/AIA/14 (11-15)
Approved for use through 04/30/2017. OMB 0651-0032
U.S. Patent and Trademark Office; U.S. DEPARTMENT OF COMMERCE
Under the Paperwork Reduction Act of 1995, no persons are required to respond to a collection of information unless it contains a valid OMB control number.

Application Data Sheet 37 CFR 1.76	Attorney Docket Number	
	Application Number	
Title of Invention	Multifunction Mobile Device and Appliance Control	

Applicant Information:

Providing assignment information in this section does not substitute for compliance with any requirement of part 3 of Title 37 of CFR to have an assignment recorded by the Office.

Applicant 1 Remove

If the applicant is the inventor (or the remaining joint inventor or inventors under 37 CFR 1.45), this section should not be completed. The information to be provided in this section is the name and address of the legal representative who is the applicant under 37 CFR 1.43; or the name and address of the assignee, person to whom the inventor is under an obligation to assign the invention, or person who otherwise shows sufficient proprietary interest in the matter who is the applicant under 37 CFR 1.46. If the applicant is an applicant under 37 CFR 1.46 (assignee, person to whom the inventor is obligated to assign, or person who otherwise shows sufficient proprietary interest) together with one or more joint inventors, then the joint inventor or inventors who are also the applicant should be identified in this section.

Clear

Assignee	Legal Representative under 35 U.S.C. 117	● Joint Inventor
Person to whom the inventor is obligated to assign.	Person who shows sufficient proprietary interest	

If applicant is the legal representative, indicate the authority to file the patent application, the inventor is:

Name of the Deceased or Legally Incapacitated Inventor:

If the Applicant is an Organization check here. ☐

Prefix	**Given Name**	Middle Name	**Family Name**	Suffix
	Sanjay	K.	Rao	

Mailing Address Information For Applicant:

Address 1	3087 Alexis Drive		
Address 2			
City	Palo Alto	**State/Province**	CA
Country	US	Postal Code	94304
Phone Number		Fax Number	
Email Address			

Additional Applicant Data may be generated within this form by selecting the Add button. Add

PTO/AIA/14 (11-15)
Approved for use through 04/30/2017. OMB 0651-0032
U.S. Patent and Trademark Office; U.S. DEPARTMENT OF COMMERCE
Under the Paperwork Reduction Act of 1995, no persons are required to respond to a collection of information unless it contains a valid OMB control number.

Application Data Sheet 37 CFR 1.76	Attorney Docket Number	
	Application Number	
Title of Invention	Multifunction Mobile Device and Appliance Control	

Applicant 2 Remove

If the applicant is the inventor (or the remaining joint inventor or inventors under 37 CFR 1.45), this section should not be completed. The information to be provided in this section is the name and address of the legal representative who is the applicant under 37 CFR 1.43; or the name and address of the assignee, person to whom the inventor is under an obligation to assign the invention, or person who otherwise shows sufficient proprietary interest in the matter who is the applicant under 37 CFR 1.46. If the applicant is an applicant under 37 CFR 1.46 (assignee, person to whom the inventor is obligated to assign, or person who otherwise shows sufficient proprietary interest) together with one or more joint inventors, then the joint inventor or inventors who are also the applicant should be identified in this section.

Clear

Assignee	Legal Representative under 35 U.S.C. 117	(•) Joint Inventor
Person to whom the inventor is obligated to assign.	Person who shows sufficient proprietary interest	

If applicant is the legal representative, indicate the authority to file the patent application, the inventor is:

Name of the Deceased or Legally Incapacitated Inventor:

If the Applicant is an Organization check here. ☐

Prefix	**Given Name**	Middle Name	**Family Name**	Suffix
	Sunil	K.	Rao	

Mailing Address Information For Applicant:

Address 1	3087 Alexis Drive		
Address 2			
City	Palo Alto	**State/Province**	CA
Country	US	Postal Code	94304
Phone Number		Fax Number	
Email Address			

Additional Applicant Data may be generated within this form by selecting the Add button. Add

Applicant 3 Remove

If the applicant is the inventor (or the remaining joint inventor or inventors under 37 CFR 1.45), this section should not be completed. The information to be provided in this section is the name and address of the legal representative who is the applicant under 37 CFR 1.43; or the name and address of the assignee, person to whom the inventor is under an obligation to assign the invention, or person who otherwise shows sufficient proprietary interest in the matter who is the applicant under 37 CFR 1.46. If the applicant is an applicant under 37 CFR 1.46 (assignee, person to whom the inventor is obligated to assign, or person who otherwise shows sufficient proprietary interest) together with one or more joint inventors, then the joint inventor or inventors who are also the applicant should be identified in this section.

Clear

Assignee	Legal Representative under 35 U.S.C. 117	(•) Joint Inventor
Person to whom the inventor is obligated to assign.	Person who shows sufficient proprietary interest	

If applicant is the legal representative, indicate the authority to file the patent application, the inventor is:

PTO/AIA/14 (11-15)
Approved for use through 04/30/2017. OMB 0651-0032
U.S. Patent and Trademark Office; U.S. DEPARTMENT OF COMMERCE
Under the Paperwork Reduction Act of 1995, no persons are required to respond to a collection of information unless it contains a valid OMB control number.

Application Data Sheet 37 CFR 1.76	Attorney Docket Number	
	Application Number	
Title of Invention	Multifunction Mobile Device and Appliance Control	

Name of the Deceased or Legally Incapacitated Inventor:	
If the Applicant is an Organization check here.	☐

Prefix	**Given Name**	Middle Name	**Family Name**	Suffix
	Raman	K.	Rao	

Mailing Address Information For Applicant:

Address 1	3087 Alexis Drive		
Address 2			
City	Palo Alto	**State/Province**	CA
Country	US	Postal Code	94304
Phone Number		Fax Number	
Email Address			

Additional Applicant Data may be generated within this form by selecting the Add button. Add

Assignee Information including Non-Applicant Assignee Information:

Providing assignment information in this section does not substitute for compliance with any requirement of part 3 of Title 37 of CFR to have an assignment recorded by the Office.

Assignee 1

Complete this section if assignee information, including non-applicant assignee information, is desired to be included on the patent application publication. An assignee-applicant identified in the "Applicant Information" section will appear on the patent application publication as an applicant. For an assignee-applicant, complete this section only if identification as an assignee is also desired on the patent application publication.

Remove

If the Assignee or Non-Applicant Assignee is an Organization check here. ☐

Prefix	**Given Name**	Middle Name	**Family Name**	Suffix

PTO/AIA/14 (11-15)
Approved for use through 04/30/2017. OMB 0651-0032
U.S. Patent and Trademark Office; U.S. DEPARTMENT OF COMMERCE
Under the Paperwork Reduction Act of 1995, no persons are required to respond to a collection of information unless it contains a valid OMB control number.

Application Data Sheet 37 CFR 1.76	Attorney Docket Number	
	Application Number	
Title of Invention	Multifunction Mobile Device and Appliance Control	

Mailing Address Information For Assignee including Non-Applicant Assignee:

Address 1			
Address 2			
City		**State/Province**	
Country i		Postal Code	
Phone Number		Fax Number	
Email Address			

Additional Assignee or Non-Applicant Assignee Data may be generated within this form by selecting the Add button. Add

Signature:

Remove

NOTE: This Application Data Sheet must be signed in accordance with 37 CFR 1.33(b). **However, if this Application Data Sheet is submitted with the INITIAL filing of the application and either box A or B is not checked in subsection 2 of the "Authorization or Opt-Out of Authorization to Permit Access" section, then this form must also be signed in accordance with 37 CFR 1.14(c).**

This Application Data Sheet **must** be signed by a patent practitioner if one or more of the applicants is a **juristic entity** (e.g., corporation or association). If the applicant is two or more joint inventors, this form must be signed by a patent practitioner, **all** joint inventors who are the applicant, or one or more joint inventor-applicants who have been given power of attorney (e.g., see USPTO Form PTO/AIA/81) on behalf of **all** joint inventor-applicants.

See 37 CFR 1.4(d) for the manner of making signatures and certifications.

Signature	/Sanjay K. Rao/			Date (YYYY-MM-DD)	2017-07-06
First Name	Sanjay	Last Name	Rao	Registration Number	

Additional Signature may be generated within this form by selecting the Add button. Add

Signature:

Remove

NOTE: This Application Data Sheet must be signed in accordance with 37 CFR 1.33(b). **However, if this Application Data Sheet is submitted with the INITIAL filing of the application and either box A or B is not checked in subsection 2 of the "Authorization or Opt-Out of Authorization to Permit Access" section, then this form must also be signed in accordance with 37 CFR 1.14(c).**

This Application Data Sheet **must** be signed by a patent practitioner if one or more of the applicants is a **juristic entity** (e.g., corporation or association). If the applicant is two or more joint inventors, this form must be signed by a patent practitioner, **all** joint inventors who are the applicant, or one or more joint inventor-applicants who have been given power of attorney (e.g., see USPTO Form PTO/AIA/81) on behalf of **all** joint inventor-applicants.

See 37 CFR 1.4(d) for the manner of making signatures and certifications.

Signature	/Sunil K. Rao/			Date (YYYY-MM-DD)	2017-07-06
First Name	Sunil	Last Name	Rao	Registration Number	

PTO/AIA/14 (11-15)
Approved for use through 04/30/2017. OMB 0651-0032
U.S. Patent and Trademark Office; U.S. DEPARTMENT OF COMMERCE
Under the Paperwork Reduction Act of 1995, no persons are required to respond to a collection of information unless it contains a valid OMB control number.

Application Data Sheet 37 CFR 1.76	Attorney Docket Number	
	Application Number	
Title of Invention	Multifunction Mobile Device and Appliance Control	

Additional Signature may be generated within this form by selecting the Add button. Add

This collection of information is required by 37 CFR 1.76. The information is required to obtain or retain a benefit by the public which is to file (and by the USPTO to process) an application. Confidentiality is governed by 35 U.S.C. 122 and 37 CFR 1.14. This collection is estimated to take 23 minutes to complete, including gathering, preparing, and submitting the completed application data sheet form to the USPTO. Time will vary depending upon the individual case. Any comments on the amount of time you require to complete this form and/or suggestions for reducing this burden, should be sent to the Chief Information Officer, U.S. Patent and Trademark Office, U.S. Department of Commerce, P.O. Box 1450, Alexandria, VA 22313-1450. DO NOT SEND FEES OR COMPLETED FORMS TO THIS ADDRESS. **SEND TO: Commissioner for Patents, P.O. Box 1450, Alexandria, VA 22313-1450.**

Privacy Act Statement

The Privacy Act of 1974 (P.L. 93-579) requires that you be given certain information in connection with your submission of the attached form related to a patent application or patent. Accordingly, pursuant to the requirements of the Act, please be advised that: (1) the general authority for the collection of this information is 35 U.S.C. 2(b)(2); (2) furnishing of the information solicited is voluntary; and (3) the principal purpose for which the information is used by the U.S. Patent and Trademark Office is to process and/or examine your submission related to a patent application or patent. If you do not furnish the requested information, the U.S. Patent and Trademark Office may not be able to process and/or examine your submission, which may result in termination of proceedings or abandonment of the application or expiration of the patent.

The information provided by you in this form will be subject to the following routine uses:

1 The information on this form will be treated confidentially to the extent allowed under the Freedom of Information Act (5 U.S.C. 552) and the Privacy Act (5 U.S.C. 552a). Records from this system of records may be disclosed to the Department of Justice to determine whether the Freedom of Information Act requires disclosure of these records.

2. A record from this system of records may be disclosed, as a routine use, in the course of presenting evidence to a court, magistrate, or administrative tribunal, including disclosures to opposing counsel in the course of settlement negotiations.

3 A record in this system of records may be disclosed, as a routine use, to a Member of Congress submitting a request involving an individual, to whom the record pertains, when the individual has requested assistance from the Member with respect to the subject matter of the record.

4. A record in this system of records may be disclosed, as a routine use, to a contractor of the Agency having need for the information in order to perform a contract. Recipients of information shall be required to comply with the requirements of the Privacy Act of 1974, as amended, pursuant to 5 U.S.C. 552a(m).

5. A record related to an International Application filed under the Patent Cooperation Treaty in this system of records may be disclosed, as a routine use, to the International Bureau of the World Intellectual Property Organization, pursuant to the Patent CooperationTreaty.

6. A record in this system of records may be disclosed, as a routine use, to another federal agency for purposes of National Security review (35 U.S.C. 181) and for review pursuant to the Atomic Energy Act (42 U.S.C. 218(c)).

7. A record from this system of records may be disclosed, as a routine use, to the Administrator, General Services, or his/her designee, during an inspection of records conducted by GSA as part of that agency's responsibility to recommend improvements in records management practices and programs, under authority of 44 U.S.C. 2904 and 2906. Such disclosure shall be made in accordance with the GSA regulations governing inspection of records for this purpose, and any other relevant (i.e., GSA or Commerce) directive. Such disclosure shall not be used to make determinations about individuals.

8. A record from this system of records may be disclosed, as a routine use, to the public after either publication of the application pursuant to 35 U.S.C. 122(b) or issuance of a patent pursuant to 35 U.S.C. 151. Further, a record may be disclosed, subject to the limitations of 37 CFR 1.14, as a routine use, to the public if the record was filed in an application which became abandoned or in which the proceedings were terminated and which application is referenced by either a published application, an application open to public inspections or an issued patent.

9. A record from this system of records may be disclosed, as a routine use, to a Federal, State, or local law enforcement agency, if the USPTO becomes aware of a violation or potential violation of law or regulation.

OK TO ENTER
/AP/ 8/5/17

I hereby certify that this correspondence is being electronically transmitted to the USPTO on the date shown below.

Date: July 06, 2017 Signature: /Sanjay K. Rao/ (Sanjay K. Rao)

IN THE UNITED STATES PATENT AND TRADEMARK OFFICE

Application No.:	10/911,211
Confirmation No.:	7409
Filing Date:	October 13, 2004
Inventor(s):	Sanjay K. Rao et al.
Title:	Multifunction Mobile Devices and Appliance Control
Examiner:	AJIT PATEL
Group Art Unit:	7409

AMENDMENT UNDER 37 C.F.R. §3.12 AND ISSUE FEE

Mail Stop Amendments
Commissioner for Patents
P.O. Box 1450
Alexandria, VA 22313-1450

Dear Examiner Patel:

Prior to issuance, entry of this Amendment is respectfully requested. A notice of allowance was issued on April 06, 2017 for which a response is due July 06, 2017. Accordingly, this response is timely filed. Applicants have amended the priority claim which is reflected in an updated ADS which accompanies this paper.

Amendments to the **specification** begin on Page 2.

OK TO ENTER
/AP/ 8/5/17

PTO/AIA/14 (11-15)
Approved for use through 04/30/2017. OMB 0651-0032
U.S. Patent and Trademark Office; U.S. DEPARTMENT OF COMMERCE

Under the Paperwork Reduction Act of 1995, no persons are required to respond to a collection of information unless it contains a valid OMB control number.

Application Data Sheet 37 CFR 1.76	Attorney Docket Number	
	Application Number	
Title of Invention	Multifunction Mobile Device and Appliance Control	

The application data sheet is part of the provisional or nonprovisional application for which it is being submitted. The following form contains the bibliographic data arranged in a format specified by the United States Patent and Trademark Office as outlined in 37 CFR 1.76.
This document may be completed electronically and submitted to the Office in electronic format using the Electronic Filing System (EFS) or the document may be printed and included in a paper filed application.

Secrecy Order 37 CFR 5.2:

☐ Portions or all of the application associated with this Application Data Sheet may fall under a Secrecy Order pursuant to 37 CFR 5.2 (Paper filers only. Applications that fall under Secrecy Order may not be filed electronically.)

Inventor Information:

Inventor 1 Remove

Legal Name

Prefix	Given Name	Middle Name	Family Name	Suffix
	Sanjay	K.	Rao	

Residence Information (Select One) • US Residency Non US Residency Active US Military Service

City	Palo Alto	State/Province	CA	Country of Residence	US

Mailing Address of Inventor:

Address 1	3087 Alexis Drive
Address 2	
City	Palo Alto
State/Province	CA
Postal Code	94304
Country	US

Inventor 2 Remove

Legal Name

Prefix	Given Name	Middle Name	Family Name	Suffix
	Sunil	K.	Rao	

Residence Information (Select One) ◉ US Residency Non US Residency Active US Military Service

City	Palo Alto	State/Province	CA	Country of Residence	US

Mailing Address of Inventor:

Address 1	3087 Alexis Drive
Address 2	
City	Palo Alto
State/Province	CA
Postal Code	94304
Country	US

Inventor 3 Remove

Legal Name

Prefix	Given Name	Middle Name	Family Name	Suffix
	Raman	K.	Rao	

Residence Information (Select One) ◉ US Residency Non US Residency Active US Military Service

PTO/AIA/14 (11-15)
Approved for use through 04/30/2017. OMB 0651-0032
U.S. Patent and Trademark Office; U.S. DEPARTMENT OF COMMERCE
Under the Paperwork Reduction Act of 1995, no persons are required to respond to a collection of information unless it contains a valid OMB control number.

Application Data Sheet 37 CFR 1.76	Attorney Docket Number	
	Application Number	
Title of Invention	Multifunction Mobile Device and Appliance Control	

City	Palo Alto	State/Province	CA	Country of Residence	US

Mailing Address of Inventor:

Address 1	3087 Alexis Drive		
Address 2			
City	Palo Alto	**State/Province**	CA
Postal Code	94304	**Country**	US

All Inventors Must Be Listed - Additional Inventor Information blocks may be generated within this form by selecting the **Add** button. Add

Correspondence Information:

Enter either Customer Number or complete the Correspondence Information section below.
For further information see 37 CFR 1.33(a).

☐ **An Address is being provided for the correspondence Information of this application.**

Customer Number	105481		
Email Address	patent@ipholdings.com	Add Email	Remove Email

Application Information:

Title of the Invention	Multifunction Mobile Device and Appliance Control		
Attorney Docket Number		**Small Entity Status Claimed**	☒
Application Type	Nonprovisional		
Subject Matter			
Total Number of Drawing Sheets (if any)	5	**Suggested Figure for Publication (if any)**	

Filing By Reference:

Only complete this section when filing an application by reference under 35 U.S.C. 111(c) and 37 CFR 1.57(a). Do not complete this section if application papers including a specification and any drawings are being filed. Any domestic benefit or foreign priority information must be provided in the appropriate section(s) below (i.e., "Domestic Benefit/National Stage Information" and "Foreign Priority Information").

For the purposes of a filing date under 37 CFR 1.53(b), the description and any drawings of the present application are replaced by this reference to the previously filed application, subject to conditions and requirements of 37 CFR 1.57(a).

Application number of the previously filed application	Filing date (YYYY-MM-DD)	Intellectual Property Authority or Country

Publication Information:

☐ Request Early Publication (Fee required at time of Request 37 CFR 1.219)

☐ **Request Not to Publish.** I hereby request that the attached application not be published under 35 U.S.C. 122(b) and certify that the invention disclosed in the attached application **has not and will not** be the subject of an application filed in another country, or under a multilateral international agreement, that requires publication at eighteen months after filing.

PTO/AIA/14 (11-15)
Approved for use through 04/30/2017. OMB 0651-0032
U.S. Patent and Trademark Office; U.S. DEPARTMENT OF COMMERCE
Under the Paperwork Reduction Act of 1995, no persons are required to respond to a collection of information unless it contains a valid OMB control number.

Application Data Sheet 37 CFR 1.76	Attorney Docket Number	
	Application Number	
Title of Invention	Multifunction Mobile Device and Appliance Control	

Representative Information:

Representative information should be provided for all practitioners having a power of attorney in the application. Providing this information in the Application Data Sheet does not constitute a power of attorney in the application (see 37 CFR 1.32).
Either enter Customer Number or complete the Representative Name section below. If both sections are completed the customer Number will be used for the Representative Information during processing.

Please Select One:	● Customer Number	US Patent Practitioner	◯ Limited Recognition (37 CFR 11.9)
Customer Number			

Domestic Benefit/National Stage Information:

This section allows for the applicant to either claim benefit under 35 U.S.C. 119(e), 120, 121, 365(c), or 386(c) or indicate National Stage entry from a PCT application. Providing benefit claim information in the Application Data Sheet constitutes the specific reference required by 35 U.S.C. 119(e) or 120, and 37 CFR 1.78.
When referring to the current application, please leave the "Application Number" field blank.

Prior Application Status: Patented — Remove

Application Number	Continuity Type	Prior Application Number	Filing Date (YYYY-MM-DD)	Patent Number	Issue Date (YYYY-MM-DD)
	Division of	09591381	2000-06-09	7929950	2011-04-19

Additional Domestic Benefit/National Stage Data may be generated within this form by selecting the **Add** button. — Add

Foreign Priority Information:

This section allows for the applicant to claim priority to a foreign application. Providing this information in the application data sheet constitutes the claim for priority as required by 35 U.S.C. 119(b) and 37 CFR 1.55. When priority is claimed to a foreign application that is eligible for retrieval under the priority document exchange program (PDX)[i] the information will be used by the Office to automatically attempt retrieval pursuant to 37 CFR 1.55(i)(1) and (2). Under the PDX program, applicant bears the ultimate responsibility for ensuring that a copy of the foreign application is received by the Office from the participating foreign intellectual property office, or a certified copy of the foreign priority application is filed, within the time period specified in 37 CFR 1.55(g)(1).

Remove

Application Number	Country[i]	Filing Date (YYYY-MM-DD)	Access Code[i] (if applicable)

Additional Foreign Priority Data may be generated within this form by selecting the **Add** button. — Add

PTO/AIA/14 (11-15)
Approved for use through 04/30/2017. OMB 0651-0032
U.S. Patent and Trademark Office; U.S. DEPARTMENT OF COMMERCE
Under the Paperwork Reduction Act of 1995, no persons are required to respond to a collection of information unless it contains a valid OMB control number.

Application Data Sheet 37 CFR 1.76	Attorney Docket Number	
	Application Number	
Title of Invention	Multifunction Mobile Device and Appliance Control	

Statement under 37 CFR 1.55 or 1.78 for AIA (First Inventor to File) Transition Applications

☐ This application (1) claims priority to or the benefit of an application filed before March 16, 2013 and (2) also contains, or contained at any time, a claim to a claimed invention that has an effective filing date on or after March 16, 2013.
NOTE: By providing this statement under 37 CFR 1.55 or 1.78, this application, with a filing date on or after March 16, 2013, will be examined under the first inventor to file provisions of the AIA.

PTO/AIA/14 (11-15)
Approved for use through 04/30/2017. OMB 0651-0032
U.S. Patent and Trademark Office; U.S. DEPARTMENT OF COMMERCE
Under the Paperwork Reduction Act of 1995, no persons are required to respond to a collection of information unless it contains a valid OMB control number.

Application Data Sheet 37 CFR 1.76	Attorney Docket Number	
	Application Number	
Title of Invention	Multifunction Mobile Device and Appliance Control	

Authorization or Opt-Out of Authorization to Permit Access:

When this Application Data Sheet is properly signed and filed with the application, applicant has provided written authority to permit a participating foreign intellectual property (IP) office access to the instant application-as-filed (see paragraph A in subsection 1 below) and the European Patent Office (EPO) access to any search results from the instant application (see paragraph B in subsection 1 below).

Should applicant choose not to provide an authorization identified in subsection 1 below, applicant **must opt-out** of the authorization by checking the corresponding box A or B or both in subsection 2 below.

NOTE: This section of the Application Data Sheet is **ONLY** reviewed and processed with the **INITIAL** filing of an application. After the initial filing of an application, an Application Data Sheet cannot be used to provide or rescind authorization for access by a foreign IP office(s). Instead, Form PTO/SB/39 or PTO/SB/69 must be used as appropriate.

1. Authorization to Permit Access by a Foreign Intellectual Property Office(s)

A. Priority Document Exchange (PDX) - Unless box A in subsection 2 (opt-out of authorization) is checked, the undersigned hereby **grants the USPTO authority** to provide the European Patent Office (EPO), the Japan Patent Office (JPO), the Korean Intellectual Property Office (KIPO), the State Intellectual Property Office of the People's Republic of China (SIPO), the World Intellectual Property Organization (WIPO), and any other foreign intellectual property office participating with the USPTO in a bilateral or multilateral priority document exchange agreement in which a foreign application claiming priority to the instant patent application is filed, access to: (1) the instant patent application-as-filed and its related bibliographic data, (2) any foreign or domestic application to which priority or benefit is claimed by the instant application and its related bibliographic data, and (3) the date of filing of this Authorization. See 37 CFR 1.14(h)(1).

B. Search Results from U.S. Application to EPO - Unless box B in subsection 2 (opt-out of authorization) is checked, the undersigned hereby **grants the USPTO authority** to provide the EPO access to the bibliographic data and search results from the instant patent application when a European patent application claiming priority to the instant patent application is filed. See 37 CFR 1.14(h)(2).

The applicant is reminded that the EPO's Rule 141(1) EPC (European Patent Convention) requires applicants to submit a copy of search results from the instant application without delay in a European patent application that claims priority to the instant application.

2. Opt-Out of Authorizations to Permit Access by a Foreign Intellectual Property Office(s)

☐ A. Applicant **DOES NOT** authorize the USPTO to permit a participating foreign IP office access to the instant application-as-filed. If this box is checked, the USPTO will not be providing a participating foreign IP office with any documents and information identified in subsection 1A above.

☐ B. Applicant **DOES NOT** authorize the USPTO to transmit to the EPO any search results from the instant patent application. If this box is checked, the USPTO will not be providing the EPO with search results from the instant application.

NOTE: Once the application has published or is otherwise publicly available, the USPTO may provide access to the application in accordance with 37 CFR 1.14.

PTO/AIA/14 (11-15)
Approved for use through 04/30/2017. OMB 0651-0032
U.S. Patent and Trademark Office; U.S. DEPARTMENT OF COMMERCE
Under the Paperwork Reduction Act of 1995, no persons are required to respond to a collection of information unless it contains a valid OMB control number.

Application Data Sheet 37 CFR 1.76	Attorney Docket Number	
	Application Number	
Title of Invention	Multifunction Mobile Device and Appliance Control	

Applicant Information:

Providing assignment information in this section does not substitute for compliance with any requirement of part 3 of Title 37 of CFR to have an assignment recorded by the Office.

Applicant 1 Remove

If the applicant is the inventor (or the remaining joint inventor or inventors under 37 CFR 1.45), this section should not be completed. The information to be provided in this section is the name and address of the legal representative who is the applicant under 37 CFR 1.43; or the name and address of the assignee, person to whom the inventor is under an obligation to assign the invention, or person who otherwise shows sufficient proprietary interest in the matter who is the applicant under 37 CFR 1.46. If the applicant is an applicant under 37 CFR 1.46 (assignee, person to whom the inventor is obligated to assign, or person who otherwise shows sufficient proprietary interest) together with one or more joint inventors, then the joint inventor or inventors who are also the applicant should be identified in this section.

Clear

Assignee	Legal Representative under 35 U.S.C. 117	● Joint Inventor
Person to whom the inventor is obligated to assign.	Person who shows sufficient proprietary interest	

If applicant is the legal representative, indicate the authority to file the patent application, the inventor is:

Name of the Deceased or Legally Incapacitated Inventor:

If the Applicant is an Organization check here. ☐

Prefix	Given Name	Middle Name	Family Name	Suffix
	Sanjay	K.	Rao	

Mailing Address Information For Applicant:

Address 1	3087 Alexis Drive		
Address 2			
City	Palo Alto	**State/Province**	CA
Country	US	Postal Code	94304
Phone Number		Fax Number	
Email Address			

Additional Applicant Data may be generated within this form by selecting the Add button. Add

PTO/AIA/14 (11-15)
Approved for use through 04/30/2017. OMB 0651-0032
U.S. Patent and Trademark Office; U.S. DEPARTMENT OF COMMERCE
Under the Paperwork Reduction Act of 1995, no persons are required to respond to a collection of information unless it contains a valid OMB control number.

Application Data Sheet 37 CFR 1.76	Attorney Docket Number	
	Application Number	
Title of Invention	Multifunction Mobile Device and Appliance Control	

Applicant 2 Remove

If the applicant is the inventor (or the remaining joint inventor or inventors under 37 CFR 1.45), this section should not be completed. The information to be provided in this section is the name and address of the legal representative who is the applicant under 37 CFR 1.43; or the name and address of the assignee, person to whom the inventor is under an obligation to assign the invention, or person who otherwise shows sufficient proprietary interest in the matter who is the applicant under 37 CFR 1.46. If the applicant is an applicant under 37 CFR 1.46 (assignee, person to whom the inventor is obligated to assign, or person who otherwise shows sufficient proprietary interest) together with one or more joint inventors, then the joint inventor or inventors who are also the applicant should be identified in this section.

Clear

Assignee	Legal Representative under 35 U.S.C. 117	(•) Joint Inventor
Person to whom the inventor is obligated to assign.	Person who shows sufficient proprietary interest	

If applicant is the legal representative, indicate the authority to file the patent application, the inventor is:

Name of the Deceased or Legally Incapacitated Inventor:

If the Applicant is an Organization check here. ☐

Prefix	**Given Name**	Middle Name	**Family Name**	Suffix
	Sunil	K.	Rao	

Mailing Address Information For Applicant:

Address 1	3087 Alexis Drive		
Address 2			
City	Palo Alto	**State/Province**	CA
Country	US	Postal Code	94304
Phone Number		Fax Number	
Email Address			

Additional Applicant Data may be generated within this form by selecting the Add button. Add

Applicant 3 Remove

If the applicant is the inventor (or the remaining joint inventor or inventors under 37 CFR 1.45), this section should not be completed. The information to be provided in this section is the name and address of the legal representative who is the applicant under 37 CFR 1.43; or the name and address of the assignee, person to whom the inventor is under an obligation to assign the invention, or person who otherwise shows sufficient proprietary interest in the matter who is the applicant under 37 CFR 1.46. If the applicant is an applicant under 37 CFR 1.46 (assignee, person to whom the inventor is obligated to assign, or person who otherwise shows sufficient proprietary interest) together with one or more joint inventors, then the joint inventor or inventors who are also the applicant should be identified in this section.

Clear

Assignee	Legal Representative under 35 U.S.C. 117	(•) Joint Inventor
Person to whom the inventor is obligated to assign.	Person who shows sufficient proprietary interest	

If applicant is the legal representative, indicate the authority to file the patent application, the inventor is:

PTO/AIA/14 (11-15)
Approved for use through 04/30/2017. OMB 0651-0032
U.S. Patent and Trademark Office; U.S. DEPARTMENT OF COMMERCE
Under the Paperwork Reduction Act of 1995, no persons are required to respond to a collection of information unless it contains a valid OMB control number.

Application Data Sheet 37 CFR 1.76	Attorney Docket Number	
	Application Number	
Title of Invention	Multifunction Mobile Device and Appliance Control	

Name of the Deceased or Legally Incapacitated Inventor:	
If the Applicant is an Organization check here.	☐

Prefix	**Given Name**	Middle Name	**Family Name**	Suffix
	Raman	K.	Rao	

Mailing Address Information For Applicant:

Address 1	3087 Alexis Drive		
Address 2			
City	Palo Alto	**State/Province**	CA
Country	US	Postal Code	94304
Phone Number		Fax Number	
Email Address			

Additional Applicant Data may be generated within this form by selecting the Add button. Add

Assignee Information including Non-Applicant Assignee Information:

Providing assignment information in this section does not substitute for compliance with any requirement of part 3 of Title 37 of CFR to have an assignment recorded by the Office.

Assignee 1

Complete this section if assignee information, including non-applicant assignee information, is desired to be included on the patent application publication. An assignee-applicant identified in the "Applicant Information" section will appear on the patent application publication as an applicant. For an assignee-applicant, complete this section only if identification as an assignee is also desired on the patent application publication.

Remove

If the Assignee or Non-Applicant Assignee is an Organization check here. ☐

Prefix	**Given Name**	Middle Name	**Family Name**	Suffix

PTO/AIA/14 (11-15)
Approved for use through 04/30/2017. OMB 0651-0032
U.S. Patent and Trademark Office; U.S. DEPARTMENT OF COMMERCE
Under the Paperwork Reduction Act of 1995, no persons are required to respond to a collection of information unless it contains a valid OMB control number.

Application Data Sheet 37 CFR 1.76	Attorney Docket Number	
	Application Number	
Title of Invention	Multifunction Mobile Device and Appliance Control	

Mailing Address Information For Assignee including Non-Applicant Assignee:			
Address 1			
Address 2			
City		**State/Province**	
Country i		Postal Code	
Phone Number		Fax Number	
Email Address			

Additional Assignee or Non-Applicant Assignee Data may be generated within this form by selecting the Add button. Add

Signature:

Remove

NOTE: This Application Data Sheet must be signed in accordance with 37 CFR 1.33(b). **However, if this Application Data Sheet is submitted with the INITIAL filing of the application and either box A or B is not checked in subsection 2 of the "Authorization or Opt-Out of Authorization to Permit Access" section, then this form must also be signed in accordance with 37 CFR 1.14(c).**

This Application Data Sheet **must** be signed by a patent practitioner if one or more of the applicants is a **juristic entity** (e.g., corporation or association). If the applicant is two or more joint inventors, this form must be signed by a patent practitioner, **all** joint inventors who are the applicant, or one or more joint inventor-applicants who have been given power of attorney (e.g., see USPTO Form PTO/AIA/81) on behalf of **all** joint inventor-applicants.

See 37 CFR 1.4(d) for the manner of making signatures and certifications.

Signature	/Sanjay K. Rao/			Date (YYYY-MM-DD)	2017-07-06
First Name	Sanjay	Last Name	Rao	Registration Number	

Additional Signature may be generated within this form by selecting the Add button. Add

Signature:

Remove

NOTE: This Application Data Sheet must be signed in accordance with 37 CFR 1.33(b). **However, if this Application Data Sheet is submitted with the INITIAL filing of the application and either box A or B is not checked in subsection 2 of the "Authorization or Opt-Out of Authorization to Permit Access" section, then this form must also be signed in accordance with 37 CFR 1.14(c).**

This Application Data Sheet **must** be signed by a patent practitioner if one or more of the applicants is a **juristic entity** (e.g., corporation or association). If the applicant is two or more joint inventors, this form must be signed by a patent practitioner, **all** joint inventors who are the applicant, or one or more joint inventor-applicants who have been given power of attorney (e.g., see USPTO Form PTO/AIA/81) on behalf of **all** joint inventor-applicants.

See 37 CFR 1.4(d) for the manner of making signatures and certifications.

Signature	/Sunil K. Rao/			Date (YYYY-MM-DD)	2017-07-06
First Name	Sunil	Last Name	Rao	Registration Number	

PTO/AIA/14 (11-15)
Approved for use through 04/30/2017. OMB 0651-0032
U.S. Patent and Trademark Office; U.S. DEPARTMENT OF COMMERCE
Under the Paperwork Reduction Act of 1995, no persons are required to respond to a collection of information unless it contains a valid OMB control number.

Application Data Sheet 37 CFR 1.76	Attorney Docket Number	
	Application Number	
Title of Invention	Multifunction Mobile Device and Appliance Control	

Additional Signature may be generated within this form by selecting the Add button. Add

This collection of information is required by 37 CFR 1.76. The information is required to obtain or retain a benefit by the public which is to file (and by the USPTO to process) an application. Confidentiality is governed by 35 U.S.C. 122 and 37 CFR 1.14. This collection is estimated to take 23 minutes to complete, including gathering, preparing, and submitting the completed application data sheet form to the USPTO. Time will vary depending upon the individual case. Any comments on the amount of time you require to complete this form and/or suggestions for reducing this burden, should be sent to the Chief Information Officer, U.S. Patent and Trademark Office, U.S. Department of Commerce, P.O. Box 1450, Alexandria, VA 22313-1450. DO NOT SEND FEES OR COMPLETED FORMS TO THIS ADDRESS. **SEND TO: Commissioner for Patents, P.O. Box 1450, Alexandria, VA 22313-1450.**

Privacy Act Statement

The Privacy Act of 1974 (P.L. 93-579) requires that you be given certain information in connection with your submission of the attached form related to a patent application or patent. Accordingly, pursuant to the requirements of the Act, please be advised that: (1) the general authority for the collection of this information is 35 U.S.C. 2(b)(2); (2) furnishing of the information solicited is voluntary; and (3) the principal purpose for which the information is used by the U.S. Patent and Trademark Office is to process and/or examine your submission related to a patent application or patent. If you do not furnish the requested information, the U.S. Patent and Trademark Office may not be able to process and/or examine your submission, which may result in termination of proceedings or abandonment of the application or expiration of the patent.

The information provided by you in this form will be subject to the following routine uses:

1 The information on this form will be treated confidentially to the extent allowed under the Freedom of Information Act (5 U.S.C. 552) and the Privacy Act (5 U.S.C. 552a). Records from this system of records may be disclosed to the Department of Justice to determine whether the Freedom of Information Act requires disclosure of these records.

2. A record from this system of records may be disclosed, as a routine use, in the course of presenting evidence to a court, magistrate, or administrative tribunal, including disclosures to opposing counsel in the course of settlement negotiations.

3 A record in this system of records may be disclosed, as a routine use, to a Member of Congress submitting a request involving an individual, to whom the record pertains, when the individual has requested assistance from the Member with respect to the subject matter of the record.

4. A record in this system of records may be disclosed, as a routine use, to a contractor of the Agency having need for the information in order to perform a contract. Recipients of information shall be required to comply with the requirements of the Privacy Act of 1974, as amended, pursuant to 5 U.S.C. 552a(m).

5. A record related to an International Application filed under the Patent Cooperation Treaty in this system of records may be disclosed, as a routine use, to the International Bureau of the World Intellectual Property Organization, pursuant to the Patent CooperationTreaty.

6. A record in this system of records may be disclosed, as a routine use, to another federal agency for purposes of National Security review (35 U.S.C. 181) and for review pursuant to the Atomic Energy Act (42 U.S.C. 218(c)).

7. A record from this system of records may be disclosed, as a routine use, to the Administrator, General Services, or his/her designee, during an inspection of records conducted by GSA as part of that agency's responsibility to recommend improvements in records management practices and programs, under authority of 44 U.S.C. 2904 and 2906. Such disclosure shall be made in accordance with the GSA regulations governing inspection of records for this purpose, and any other relevant (i.e., GSA or Commerce) directive. Such disclosure shall not be used to make determinations about individuals.

8. A record from this system of records may be disclosed, as a routine use, to the public after either publication of the application pursuant to 35 U.S.C. 122(b) or issuance of a patent pursuant to 35 U.S.C. 151. Further, a record may be disclosed, subject to the limitations of 37 CFR 1.14, as a routine use, to the public if the record was filed in an application which became abandoned or in which the proceedings were terminated and which application is referenced by either a published application, an application open to public inspections or an issued patent.

9. A record from this system of records may be disclosed, as a routine use, to a Federal, State, or local law enforcement agency, if the USPTO becomes aware of a violation or potential violation of law or regulation.

UNITED STATES PATENT AND TRADEMARK OFFICE

UNITED STATES DEPARTMENT OF COMMERCE
United States Patent and Trademark Office
Address: COMMISSIONER FOR PATENTS
P.O. Box 1450
Alexandria, Virginia 22313-1450
www.uspto.gov

APPLICATION NO.	FILING DATE	FIRST NAMED INVENTOR	ATTORNEY DOCKET NO.	CONFIRMATION NO.
10/911,211	10/13/2004	Sanjay K. Rao	IPHLNZ00501	7409

105481 7590 08/09/2017

Rekha Rao
3087 Alexis Drive
Palo Alto, CA 94304

EXAMINER	
PATEL, AJIT	

ART UNIT	PAPER NUMBER
2644	

MAIL DATE	DELIVERY MODE
08/09/2017	PAPER

Please find below and/or attached an Office communication concerning this application or proceeding.

The time period for reply, if any, is set in the attached communication.

Response to Rule 312 Communication	Application No.	Applicant(s)
	10/911,211	RAO ET AL.
	Examiner	Art Unit
	AJIT PATEL	2644

-- The MAILING DATE of this communication appears on the cover sheet with the correspondence address –

1. ☒ The amendment filed on *06 July 2017* under 37 CFR 1.312 has been considered, and has been:

a) ☐ entered.

b) ☒ entered as directed to matters of form not affecting the scope of the invention.

c) ☐ disapproved because the amendment was filed after the payment of the issue fee.
Any amendment filed after the date the issue fee is paid must be accompanied by a petition under 37 CFR 1.313(c)(1) and the required fee to withdraw the application from issue.

d) ☐ disapproved. See explanation below.

e) ☐ entered in part. See explanation below.

/AJIT PATEL/
Primary Examiner, Art Unit 2644

UNITED STATES PATENT AND TRADEMARK OFFICE

UNITED STATES DEPARTMENT OF COMMERCE
United States Patent and Trademark Office
Address: COMMISSIONER FOR PATENTS
P.O. Box 1450
Alexandria, Virginia 22313-1450
www.uspto.gov

APPLICATION NUMBER	FILING or 371(c) DATE	GRP ART UNIT	FIL FEE REC'D	ATTY.DOCKET.NO	TOT CLAIMS	IND CLAIMS
10/911,211	10/13/2004	2644	946	IPHLNZ00501	23	4

CONFIRMATION NO. 7409

CORRECTED FILING RECEIPT

105481
Rekha Rao
3087 Alexis Drive
Palo Alto, CA 94304

OC000000093359438

Date Mailed: 08/10/2017

Receipt is acknowledged of this non-provisional patent application. The application will be taken up for examination in due course. Applicant will be notified as to the results of the examination. Any correspondence concerning the application must include the following identification information: the U.S. APPLICATION NUMBER, FILING DATE, NAME OF APPLICANT, and TITLE OF INVENTION. Fees transmitted by check or draft are subject to collection. Please verify the accuracy of the data presented on this receipt. **If an error is noted on this Filing Receipt, please submit a written request for a Filing Receipt Correction. Please provide a copy of this Filing Receipt with the changes noted thereon. If you received a "Notice to File Missing Parts" for this application, please submit any corrections to this Filing Receipt with your reply to the Notice. When the USPTO processes the reply to the Notice, the USPTO will generate another Filing Receipt incorporating the requested corrections**

Inventor(s)

Sanjay K. Rao, Palo Alto, CA;
Sunil K. Rao, Palo Alto, CA;
Raman K. Rao, Palo Alto, CA;

Applicant(s)

Sanjay K. Rao, Palo Alto, CA;
Sunil K. Rao, Palo Alto, CA;
Raman K. Rao, Palo Alto, CA;

Power of Attorney: None

Domestic Priority data as claimed by applicant

This application is a DIV of 09/591,381 06/09/2000 PAT 7929950

Foreign Applications for which priority is claimed (You may be eligible to benefit from the **Patent Prosecution Highway** program at the USPTO. Please see http://www.uspto.gov for more information.) - None.
Foreign application information must be provided in an Application Data Sheet in order to constitute a claim to foreign priority. See 37 CFR 1.55 and 1.76.

Permission to Access Application via Priority Document Exchange: No

Permission to Access Search Results: No

Applicant may provide or rescind an authorization for access using Form PTO/SB/39 or Form PTO/SB/69 as appropriate.

If Required, Foreign Filing License Granted: 03/09/2005

The country code and number of your priority application, to be used for filing abroad under the Paris Convention, is **US 10/911,211**

Projected Publication Date: Request for Non-Publication Acknowledged

Non-Publication Request: Yes

Early Publication Request: No
**** SMALL ENTITY ****
Title

Multifunction Mobile Devices and Appliance Control

Preliminary Class

455

Statement under 37 CFR 1.55 or 1.78 for AIA (First Inventor to File) Transition Applications:

PROTECTING YOUR INVENTION OUTSIDE THE UNITED STATES

Since the rights granted by a U.S. patent extend only throughout the territory of the United States and have no effect in a foreign country, an inventor who wishes patent protection in another country must apply for a patent in a specific country or in regional patent offices. Applicants may wish to consider the filing of an international application under the Patent Cooperation Treaty (PCT). An international (PCT) application generally has the same effect as a regular national patent application in each PCT-member country. The PCT process **simplifies** the filing of patent applications on the same invention in member countries, but **does not result** in a grant of "an international patent" and does not eliminate the need of applicants to file additional documents and fees in countries where patent protection is desired.

Almost every country has its own patent law, and a person desiring a patent in a particular country must make an application for patent in that country in accordance with its particular laws. Since the laws of many countries differ in various respects from the patent law of the United States, applicants are advised to seek guidance from specific foreign countries to ensure that patent rights are not lost prematurely.

Applicants also are advised that in the case of inventions made in the United States, the Director of the USPTO must issue a license before applicants can apply for a patent in a foreign country. The filing of a U.S. patent application serves as a request for a foreign filing license. The application's filing receipt contains further information and guidance as to the status of applicant's license for foreign filing.

Applicants may wish to consult the USPTO booklet, "General Information Concerning Patents" (specifically, the section entitled "Treaties and Foreign Patents") for more information on timeframes and deadlines for filing foreign patent applications. The guide is available either by contacting the USPTO Contact Center at 800-786-9199, or it can be viewed on the USPTO website at http://www.uspto.gov/web/offices/pac/doc/general/index.html.

For information on preventing theft of your intellectual property (patents, trademarks and copyrights), you may wish to consult the U.S. Government website, http://www.stopfakes.gov. Part of a Department of Commerce initiative, this website includes self-help "toolkits" giving innovators guidance on how to protect intellectual property in specific countries such as China, Korea and Mexico. For questions regarding patent enforcement issues, applicants may call the U.S. Government hotline at 1-866-999-HALT (1-866-999-4258).

LICENSE FOR FOREIGN FILING UNDER

Title 35, United States Code, Section 184

Title 37, Code of Federal Regulations, 5.11 & 5.15

GRANTED

The applicant has been granted a license under 35 U.S.C. 184, if the phrase "IF REQUIRED, FOREIGN FILING LICENSE GRANTED" followed by a date appears on this form. Such licenses are issued in all applications where the conditions for issuance of a license have been met, regardless of whether or not a license may be required as set forth in 37 CFR 5.15. The scope and limitations of this license are set forth in 37 CFR 5.15(a) unless an earlier license has been issued under 37 CFR 5.15(b). The license is subject to revocation upon written notification. The date indicated is the effective date of the license, unless an earlier license of similar scope has been granted under 37 CFR 5.13 or 5.14.

This license is to be retained by the licensee and may be used at any time on or after the effective date thereof unless it is revoked. This license is automatically transferred to any related applications(s) filed under 37 CFR 1.53(d). This license is not retroactive.

The grant of a license does not in any way lessen the responsibility of a licensee for the security of the subject matter as imposed by any Government contract or the provisions of existing laws relating to espionage and the national security or the export of technical data. Licensees should apprise themselves of current regulations especially with respect to certain countries, of other agencies, particularly the Office of Defense Trade Controls, Department of State (with respect to Arms, Munitions and Implements of War (22 CFR 121-128)); the Bureau of Industry and Security, Department of Commerce (15 CFR parts 730-774); the Office of Foreign AssetsControl, Department of Treasury (31 CFR Parts 500+) and the Department of Energy.

NOT GRANTED

No license under 35 U.S.C. 184 has been granted at this time, if the phrase "IF REQUIRED, FOREIGN FILING LICENSE GRANTED" DOES NOT appear on this form. Applicant may still petition for a license under 37 CFR 5.12, if a license is desired before the expiration of 6 months from the filing date of the application. If 6 months has lapsed from the filing date of this application and the licensee has not received any indication of a secrecy order under 35 U.S.C. 181, the licensee may foreign file the application pursuant to 37 CFR 5.15(b).

SelectUSA

The United States represents the largest, most dynamic marketplace in the world and is an unparalleled location for business investment, innovation, and commercialization of new technologies. The U.S. offers tremendous resources and advantages for those who invest and manufacture goods here. Through SelectUSA, our nation works to promote and facilitate business investment. SelectUSA provides information assistance to the international investor community; serves as an ombudsman for existing and potential investors; advocates on behalf of U.S. cities, states, and regions competing for global investment; and counsels U.S. economic development organizations on investment attraction best practices. To learn more about why the United States is the best country in the world to develop technology, manufacture products, deliver services, and grow your business, visit http://www.SelectUSA.gov or call +1-202-482-6800.

UNITED STATES PATENT AND TRADEMARK OFFICE

UNITED STATES DEPARTMENT OF COMMERCE
United States Patent and Trademark Office
Address: COMMISSIONER FOR PATENTS
P.O. Box 1450
Alexandria, Virginia 22313-1450
www.uspto.gov

APPLICATION NO.	ISSUE DATE	PATENT NO.	ATTORNEY DOCKET NO.	CONFIRMATION NO.
10/911,211	09/05/2017	9756168	IPHLNZ00501	7409

105481 7590 08/16/2017

Rekha Rao
3087 Alexis Drive
Palo Alto, CA 94304

ISSUE NOTIFICATION

The projected patent number and issue date are specified above.

Determination of Patent Term Adjustment under 35 U.S.C. 154 (b)
(application filed on or after May 29, 2000)

The Patent Term Adjustment is 940 day(s). Any patent to issue from the above-identified application will include an indication of the adjustment on the front page.

If a Continued Prosecution Application (CPA) was filed in the above-identified application, the filing date that determines Patent Term Adjustment is the filing date of the most recent CPA.

Applicant will be able to obtain more detailed information by accessing the Patent Application Information Retrieval (PAIR) WEB site (http://pair.uspto.gov).

Any questions regarding the Patent Term Extension or Adjustment determination should be directed to the Office of Patent Legal Administration at (571)-272-7702. Questions relating to issue and publication fee payments should be directed to the Application Assistance Unit (AAU) of the Office of Data Management (ODM) at (571)-272-4200.

APPLICANT(s) (Please see PAIR WEB site http://pair.uspto.gov for additional applicants):

Sanjay K. Rao, Palo Alto, CA;
Sunil K. Rao, Palo Alto, CA;
Raman K. Rao, Palo Alto, CA;

The United States represents the largest, most dynamic marketplace in the world and is an unparalleled location for business investment, innovation, and commercialization of new technologies. The USA offers tremendous resources and advantages for those who invest and manufacture goods here. Through SelectUSA, our nation works to encourage and facilitate business investment. To learn more about why the USA is the best country in the world to develop technology, manufacture products, and grow your business, visit SelectUSA.gov.