04/30/02 JC885 U.S. PTO

05-01-02

Jc971 U.S. PTO 10/135145 04/30/02

Danny L. Williams
Terry D. Morgan
J. Mike Amerson
Kenneth D. Goodman
Jeffrey A. Pyle
Jaison C. John
Ruben S. Bains
Steven K. Wong

Scott F. Diring*
George J. Oehling*
Shelley P.M. Fussey, Ph.D.*
Mark D. Moore, Ph.D.*
Louis H. Iselin, Ph.D.*
Raymund F. Eich, Ph.D.*
Daren C. Davis*
Stephanie A. Wardwell, Ph.D.*

***Patent Agent**

EXPRESS MAIL MAILING LABEL
NUMBER EL 522 495 908 US
DATE OF DEPOSIT April 30, 2002
I hereby certify that this paper or fee is being deposited with the United States Postal Service with sufficient postage "EXPRESS MAIL POST OFFICE TO ADDRESSEE" service under 37 C.F.R. 1.10 on the date indicated above and is addressed to: BOX PATENT APPLICATION, Assistant Commissioner for Patents, Washington D.C. 20231.
Kathy Llanas
Signature

WRITER'S DIRECT DIAL:
(713) 934-4053

FILE 2000.079600

APRIL 30, 2002

BOX PATENT APPLICATION
Assistant Commissioner for Patents
Washington, DC 20231

RE: *U.S. Patent Application Entitled "AGENT REACTIVE SCHEDULING IN AN AUTOMATED MANUFACTURING ENVIRONMENT"*
Inventors: Gustavo Mata, Steven C. Nettles, Larry D. Barto and Yiwei Li
Client Reference: TT4739

Sir:

Transmitted herewith for filing are:

(1) 55-page patent specification with 53 claims and an abstract (also Figures 1-7B on 6 sheets);
(2) Declaration;
(3) Assignment and Assignment Cover Sheet;
(4) Power of Attorney; and
(5) Request for Certification under 35 U.S.C. 122(b)(2)(B)(i).

JC885 U.S. PTO
04/30/02

All correspondence, notices, official letters and other communications should be directed to Jeffrey A. Pyle, Williams, Morgan & Amerson, P.C., 7676 Hillmont, Suite 250, Houston, TX 77040, and all telephone calls should be directed to Jeffrey A. Pyle at (713) 934-4053.

The Assistant Commissioner is authorized to deduct the amount of the total filing fee (listed below) from **Advanced Micro Devices, Inc. Deposit Account No. 01-0365/TT4739**.

FILING FEE CALCULATION

FOR			Small Entity		Large Entity	
Total Claims	53 - 20	= 33	x $9 =	$	Or x $18 =	$ 594.00
Independent Claims	6 - 3	= 3	x $42 =	$	Or x $84 =	$ 252.00
Multiple Dependent Claim(s)			+ $140 =	$	Or + $280=	$ 0.00
Basic Fee:			+ $370 =	$	Or + $740=	$ 740.00
Assignment Recording Fee:	($40 per assignee)		+ =	$	+ =	$ 40.00
TOTAL FILING FEES				**$ 0.00**		**$1,626.00**

Pursuant to 37 C.F.R. § 1.10 the Applicant requests that the Patent and Trademark Office accept this application and accord a serial number and filing date as of the date this application is deposited with the U.S. Postal Service for Express Mail.

Please date stamp and return the enclosed postcard to evidence receipt of these materials.

Respectfully submitted,

Jeffrey A. Pyle
Reg. No. 34,904

JAP:ym
Enclosures
cc: Mr. Paul Drake, Esq. (w/o enc.)
Ms. Samantha Cardona (w/enc.)

PTO/SB/35 (11-00)
Approved for use through 10/31/2002. OMB 0651-0031
U.S. Patent and Trademark Office; U.S DEPARTMENT OF COMMERCE
Under the Paperwork Reduction Act of 1995, no persons are required to respond to a collection of information unless it displays a valid OMB control number.

REQUEST AND CERTIFICATION UNDER 35 U.S.C. 122(b)(2)(B)(i)	First Named Inventor: **GUSTAVO MATA** Title: **AGENT REACTIVE SCHEDULING IN AN AUTOMATED MANUFACTURING ENVIRONMENT** Attorney Docket Number: 2000.079600/TT4739

I hereby certify that the invention disclosed in the attached application **has not and will not be** the subject of an application filed in another country, or under a multilateral agreement, that requires publication at eighteen months after filing. I hereby request that the attached application not be published under 35 U.S.C. 122(b).

Date: April 30, 2002

Signature

Jeffrey A. Pyle
Typed or printed name

This request must be signed in compliance with 37 CFR 1.33(b) and submitted with the application **upon filing**.

Applicant may rescind this nonpublication request at any time. If applicant rescinds a request that an application not be published under 35 U.S.C. 122(b), the application will be scheduled for publication at eighteen months from the earliest claimed filing date for which a benefit is claimed.

If applicant subsequently files an application directed to the invention disclosed in the attached application in another country, or under a multilateral international agreement, that requires publication of applications eighteen months after filing, the applicant **must** notify the United States Patent and Trademark Office of such filing within forty-five (45) days after the date of the filing of such foreign or international application. **Failure to do so will result in abandonment of this application (35 U.S.C. 122(b)(2)(B)(iii).**

Burden Hour Statement: This collection of information is required by 37 CFR 1.213(a). The information is used by the public to request that an application not be published under 35 U.S.C. 122(b) (and the PTO to process that request). Confidentiality is governed by 35 U.S C. 122 and 37 CFR 1.14. This form is estimated to take 6 minutes to complete. This time will vary depending upon the needs of the individual case. Any comments on the amount of time you are required to complete this form should be sent to the Chief Information Officer, U.S. Patent and Trademark Office, Washington, DC 20231. DO NOT SEND FEES OR COMPLETED FORMS TO THIS ADDRESS. SEND TO: Assistant Commissioner for Patents, Washington, DC 20231.

WMA Docket No. 2000.079600
Client Docket No. TT4739

Application for United States Letters Patent

for

AGENT REACTIVE SCHEDULING IN AN AUTOMATED MANUFACTURING ENVIRONMENT

by

Gustavo Mata
Steven C. Nettles
Larry D. Barto
Yiwei Li

EXPRESS MAIL MAILING LABEL

NUMBER EL 522495908 US

DATE OF DEPOSIT 04/30/02

I hereby certify that this paper or fee is being deposited with the United States Postal Service with sufficient postage "EXPRESS MAIL POST OFFICE TO ADDRESSEE" service under 37 C.F.R. 1.10 on the date indicated above and is addressed to: BOX PATENT APPLICATION, Assistant Commissioner for Patents, Washington, D.C. 20231.

Kathy Navas

Signature

AGENT REACTIVE SCHEDULING IN AN AUTOMATED MANUFACTURING ENVIRONMENT

BACKGROUND OF THE INVENTION

The United States Government has a paid-up license in this invention and the right in limited circumstances to require the patent owner to license others on reasonable terms as provided for by the terms of Award No. 70NANB7H3041 awarded by the United States Department of Commerce, National Institute of Standards and Technology ("NIST").

1. FIELD OF THE INVENTION

This invention pertains to automated manufacturing environments, and, more particularly, to scheduling in an automated manufacturing environment.

2. DESCRIPTION OF THE RELATED ART

Growing technological requirements and the worldwide acceptance of sophisticated electronic devices have created an unprecedented demand for large-scale, complex, integrated circuits. Competition in the semiconductor industry requires that products be designed, manufactured, and marketed in the most efficient manner possible. This requires improvements in fabrication technology to keep pace with the rapid improvements in the electronics industry. Meeting these demands spawns many technological advances in materials and processing equipment and significantly increases the number of integrated circuit designs. These improvements also require effective utilization of computing resources and other highly sophisticated equipment to aid, not only design and fabrication, but also the scheduling, control, and automation of the manufacturing process.

Turning first to fabrication, integrated circuits, or microchips, are manufactured from modern semiconductor devices containing numerous structures or features, typically the size of a few micrometers. The fabrication process generally involves processing a number of wafers through a series of fabrication tools. Layers of materials are added to, removed from, and/or treated on a semiconducting substrate during fabrication to create the integrated circuits. The fabrication essentially comprises the following four basic operations:

Petitioner STMICROELECTRONICS, INC.,
Ex. 1006, IPR2022-00681, Pg. 5

- layering, or adding thin layers of various materials to a wafer from which a semiconductor is produced;
- patterning, or removing selected portions of added layers;
- doping, or placing specific amounts of dopants in selected portions of the wafer through openings in the added layers; and
- heat treating, or heating and cooling the materials to produce desired effects in the processed wafer.

Although there are only four basic operations, they can be combined in hundreds of different ways, depending upon the particular fabrication process. *See, e.g.*, Peter Van Zant, *Microchip Fabrication A Practical Guide to Semiconductor Processing* (3d Ed. 1997 McGraw-Hill Companies, Inc.) (ISBN 0-07-067250-4). Each fabrication tool performs one or more of four basic operations. The four basic operations are performed in accordance with an overall process to finally produce the finished semiconductor devices.

Controlling a semiconductor factory fabricating such integrated circuits, however, is a challenging task. A semiconductor factory ("fab") is a complex environment where numerous parts, typically 40,000 wafers or more, and numerous part types, typically 100 part types or more, are simultaneously being manufactured. As each wafer moves through the semiconductor factory (or, "fab"), it may undergo more than 300 processing steps, many of which use the same machines. A large factory may contain approximately 500 computer-controlled machines to perform this wafer processing. Routing, scheduling, and tracking material through the fab is a difficult and complicated task, even with the assistance of a computerized factory control system.

Efficient management of a facility for manufacturing products such as semiconductor chips requires monitoring various aspects of the manufacturing process. For example, it is typically desirable to track the amount of raw materials on hand, the status of work-in-process and the status and availability of machines and tools at every step in the process. One of the most important decisions is selecting which lot should run on each machine at any given time. Additionally, most machines used in the manufacturing process require scheduling of routine **p**reventative **m**aintenance ("PM") and equipment qualification ("Qual") procedures, as well as other diagnostic and reconditioning procedures that must be performed

Petitioner STMICROELECTRONICS, INC.,
Ex. 1006, IPR2022-00681, Pg. 6

on a regular basis. These procedures should be performed such that they do not impede the manufacturing process itself.

One approach to this issue implements an automated "**M**anufacturing **E**xecution **S**ystem" ("MES"). An automated MES enables a user to view and manipulate, to a limited extent, the status of machines and tools, or "entities," in a manufacturing environment. In addition, an MES permits dispatching and tracking of lots or work-in-process through the manufacturing process to enable resources to be managed in the most efficient manner. Specifically, in response to MES prompts, a user inputs requested information regarding work-in-process and entity status. For example, when a user performs a PM on a particular entity, the operator logs the performance of the PM (an "event") into an MES screen to update the information stored in the MES database with respect to the status of that entity. Alternatively, if an entity is to be put down for repair or maintenance, the operator will log this information into the MES database, which then prevents use of the entity until it is subsequently logged back up.

Although MES systems are sufficient for tracking lots and machines, such systems suffer several deficiencies, the most obvious of which are their passive nature, lack of advance scheduling and inability to support highly automated factory operations. Current MES systems largely depend on manufacturing personnel for monitoring factory state and initiating activities at the correct time. For example, a lot does not begin processing until a **w**afer **f**ab **t**echnician ("WFT") issues the appropriate MES command. And, prior to processing, a WFT must issue an MES command to retrieve the lot from the **a**utomated **m**aterial **h**andling **s**ystem ("AMHS") with sufficient advance planning that the lot is available at the machine when the machine becomes available. If the WFT does not retrieve the lot soon enough, or neglects to initiate processing at the earliest available time, the machine becomes idle and production is adversely impacted.

These types of deficiencies in the typical automated MES emphasize the importance of the WFT in the efficient operation of the manufacturing process. WFTs perform many vital functions. For instance, WFTs initiate dispatching, transport, and processing as their attention and time permits. They make scheduling decisions such as whether to run an incomplete batch, as opposed to waiting for additional approaching lots, or performing PM or

Petitioner STMICROELECTRONICS, INC.,
Ex. 1006, IPR2022-00681, Pg. 7

qualification procedures instead of processing lots. WFTs perform non-value added MES transactions and utilize conventional factory control systems that are passive. In this context, the term "passive" means activities in the control system must be initiated by the WFT, as opposed to being self-starting or self-initiating.

However, the presence of WFTs also inevitably introduces some inefficiencies. There typically is a large difference between the performance of the best WFT and the performance of the worst WFT. A WFT typically simultaneously monitors the processing of multiple tools and lots, making it difficult to focus on an individual lot or tool. Furthermore, the size and complexity of the modern fabrication process flows makes it exceedingly difficult for a WFT to foresee and prevent downstream bottlenecks or shortages arising from upstream activities. Shift changes, rest breaks, and days off for the WFT also create inefficiencies or machine idle time that adversely impact the manufacturing process flow. Just as the importance of the WFT is magnified by the deficiencies of the automated MES, so are the inefficiencies of the WFT magnified by his importance.

Thus, factory control systems utilized in today's wafer fabs are passive and do not enable a high degree of automation. These systems are very dependent on WFTs and other factory staff to monitor the state of the factory, to continuously react to change, to make rapid logistical decisions, and to initiate and coordinate factory control activity in a timely manner. These WFTs are *agents*, providing the active element that is lacking in factory control systems. As a result, factory effectiveness in the highly competitive semiconductor industry is quite dependent on the availability, productivity, skill level, and consistency of these human agents. WFTs must monitor and operate a number of tools located in various bays in a fab. They are forced to multiplex across tools, bays, material handling systems and a variety of factory control systems. As a fab's production ramps and more complex processes are introduced, it becomes more difficult to meet the increased complexity and volume without increasing staff or system capabilities. WFTs visibility of upstream and downstream operations, tool state, work-in-process and resource availability is limited.

However, key logistical decisions are frequently based on this limited and dated information, which is only partially provided by factory control systems. WFTs spend a significant amount of time interacting with systems, monitoring factory events and state

Petitioner STMICROELECTRONICS, INC.,
Ex. 1006, IPR2022-00681, Pg. 8

changes, and performing other non-value added functions, such as MES logging. Shift changes disrupt the operation of the fab as the technicians are temporarily unable to provide required monitoring and coordination. Despite the best efforts of the technicians, utilization of tools suffer, adversely impacting other key factory metrics including cycle time, inventory levels, factory output and mix. With the need for intrabay material handling to transport 12-inch wafers in new 300 mm wafer fabs, significant additional complexity is introduced. Conventional factory control systems are not capable of providing this level of detailed scheduling and execution control.

The present invention is directed to resolving, or at least reducing, one or all of the problems mentioned above.

SUMMARY OF THE INVENTION

The invention, in its various aspects and embodiments, is a method and apparatus for scheduling in an automated manufacturing environment. In one embodiment, a method comprises detecting an occurrence of a predetermined event in a process flow; notifying a software scheduling agent of the occurrence; and reactively scheduling an action from the software scheduling agent responsive to the detection of the predetermined event. Alternative embodiments include a computing system programmed to perform this method and a computer-readable program storage medium encoded with instructions to implement this method. In still another embodiment, the invention includes automated manufacturing environment, comprising a process flow and a computing system. The computing system further includes a plurality of software scheduling agents residing thereon, the software scheduling agents being capable of reactively scheduling appointments for activities in the process flow responsive to a plurality of predetermined events.

BRIEF DESCRIPTION OF THE DRAWINGS

The invention may be understood by reference to the following description taken in conjunction with the accompanying drawings, in which like reference numerals identify like elements, and in which:

Petitioner STMICROELECTRONICS, INC.,
Ex. 1006, IPR2022-00681, Pg. 9

FIG. 1 conceptually depicts a portion of one particular embodiment of a process flow constructed and operated in accordance with the present invention;

FIG. 2 conceptually depicts, in a partial block diagram, selected portions of the hardware and software architectures, respectively, of the computing devices in **FIG. 1**;

FIG. 3 conceptually depicts one particular implementation of the apparatus of **FIG. 1**, *i.e.*, in a portion of a process flow from a semiconductor fabrication facility, and the manner in which it schedules appointments for the consumption of resources;

FIG. 4 conceptually depicts a calendar of booked appointments;

FIG. 5 conceptually illustrates three related calendars of booked appointments;

FIG. 6A and **FIG. 6B** conceptually illustrates the changing of booked appointments to take advantage of early start times; and

FIG. 7A and **FIG. 7B** conceptually illustrate two circumstances in which booked appointments are changed to accommodate unexpectedly long durations for preceding booked appointments.

While the invention is susceptible to various modifications and alternative forms, specific embodiments thereof have been shown by way of example in the drawings and are herein described in detail. It should be understood, however, that the description herein of specific embodiments is not intended to limit the invention to the particular forms disclosed, but on the contrary, the intention is to cover all modifications, equivalents, and alternatives falling within the spirit and scope of the invention as defined by the appended claims.

DETAILED DESCRIPTION OF THE INVENTION

Illustrative embodiments of the invention are described below. In the interest of clarity, not all features of an actual implementation are described in this specification. It will of course be appreciated that in the development of any such actual embodiment, numerous implementation-specific decisions must be made to achieve the developers' specific goals, such as compliance with system-related and business-related constraints, which will vary from one implementation to another. Moreover, it will be appreciated that such a development effort, even if complex and time-consuming, would be a routine undertaking for those of ordinary skill in the art having the benefit of this disclosure.

Petitioner STMICROELECTRONICS, INC.,
Ex. 1006, IPR2022-00681, Pg. 10

FIG. 1 conceptually illustrates a portion of one particular embodiment of a process flow 100 constructed and operated in accordance with the present invention. The process flow 100 fabricates semiconductor devices. However, the invention may be applied to other types of manufacturing processes. Thus, in the process flow 100 discussed above, the lots 130 of wafers 135 may be more generically referred to as "work pieces." The process tools 115 and any process operations performed thereon need not necessarily be related to the manufacture of semiconductor devices in all embodiments. However, for the sake of clarity and to further an understanding of the invention, the terminology pertaining to semiconductor fabrication is retained in disclosing the invention in the context of the illustrated embodiments.

The illustrated portion of the process flow 100 includes two stations 105, each station 105 including a computing device 110 communicating with a process tool 115. The stations 105 communicate with one another over communications links 120. In the illustrated embodiment, the computing devices 110 and the communications links 120 comprise a portion of a larger computing system, *e.g.*, a network 125. The process tools 115 in **FIG. 1** are processing lots 130 of wafers 135 that will eventually become integrated circuit devices. The process flow 100 also includes portions of a MES and an **a**utomated **m**aterials **h**andling **s**ystem ("AMHS"), neither of which is shown for the sake of clarity, and other integrated factory controls. The AMHS "handles" the lots 130 and facilitates their transport from one station 105 to another, as well as other locations in the process flow 100.

As mentioned above, the computing devices 110 may be part of a larger computing system 125 by a connection over the communications links 120. Exemplary computing systems in such an implementation would include **l**ocal **a**rea **n**etworks ("LANs"), **w**ide **a**rea **n**etworks ("WANs"), **s**ystem **a**rea **n**etworks ("SANs"), intranets, or even the Internet. The computing system 125 employs a networked client/server architecture, but alternative embodiments may employ a peer-to-peer architecture. Thus, in some alternative embodiments, the computing devices 110 may communicate directly with one another. The communications links 120 may be wireless, coaxial cable, optical fiber, or twisted wire pair links, for example. The computing system 125, in embodiments employing one, and the communications links 120 will be implementation specific and may be implemented in any suitable manner known to the art. The computing system 125 may employ any suitable

Petitioner STMICROELECTRONICS, INC.,
Ex. 1006, IPR2022-00681, Pg. 11

communications protocol known to the art, *e.g.*, **T**ransmission **C**ontrol **P**rotocol/**I**nternet **P**rotocol ("TCP/IP").

FIG. 2 depicts selected portions of the hardware and software architectures of the computing devices 110. Some aspects of the hardware and software architecture (*e.g.*, the individual cards, the **b**asic **i**nput/**o**utput **s**ystem ("BIOS"), input/output drivers, *etc.*) are not shown. These aspects are omitted for the sake of clarity, and so as not to obscure the present invention. As will be appreciated by those of ordinary skill in the art having the benefit of this disclosure, however, the software and hardware architectures of the computing devices 110 will include many such routine features.

In the illustrated embodiment, the computing device 110 is a workstation, employing a UNIX-based operating system 200, but the invention is not so limited. The computing device 110 may be implemented in virtually any type of electronic computing device such as a notebook computer, a desktop computer, a mini-computer, a mainframe computer, or a supercomputer. The computing device 110 may even be, in some alternative embodiments, a processor or controller embedded in the process tool 115. The invention also is not limited to UNIX-based operating systems. Alternative operating systems (*e.g.*, Windows™-, Linux™-, or **d**isk **o**perating **s**ystem ("DOS") -based) may also be employed. The invention is not limited by the particular implementation of such features in the computing device 110.

The computing device 110 also includes a processor 205 communicating with storage 210 over a bus system 215. The storage 210 typically includes at least a hard disk (not shown) and **r**andom **a**ccess **m**emory ("RAM") (also not shown). The computing device 110 may also, in some embodiments, include removable storage such as an optical disk 230, or a floppy electromagnetic disk 235, or some other form, such as a magnetic tape (not shown) or a zip disk (not shown). The computing device 110 includes a monitor 240, keyboard 245, and a mouse 250, which together, along with their associated user interface software 255 comprise a user interface 260. The user interface 260 in the illustrated embodiment is a **g**raphical **u**ser **i**nterface ("GUI"), although this is not necessary to the practice of the invention.

Petitioner STMICROELECTRONICS, INC.,
Ex. 1006, IPR2022-00681, Pg. 12

Each computing device 110 includes, in the illustrated embodiment, a software agent 265 residing in the storage 210. Note that the software agents 265 may reside in the process flow 100 in places other than the computing devices 110. The *situs* of the software agent 265 is not material to the practice of the invention. Note also that, since the *situs* of the software agents 265 is not material, some computing devices 110 may have multiple software agents 265 residing thereon while other computing devices 110 may not have any. Thus, there need not be a one-to-one correspondence between the computing devices 100 and the process tools 115. Software component(s) 270, 280 of an automated MES, such as WORKSTREAM™, and of an AMHS, respectively, also reside on at least one computing device 110. As with the software agent(s) 265, the software components 270, 280 may reside anywhere within the process flow 100.

Referring now to **FIG. 1** and **FIG. 2**, the software agents 265 each represent some "manufacturing domain entity," *e.g.*, a lot 130, a process tool 115, a resource, a PM, or a Qual. A process tool 115 may be a fabrication tool used to fabricate some portion of the wafers 135, *i.e.*, layer, pattern, dope, or heat treat the wafers 135. Or, the process tool 115 may be a metrology tool used to evaluate the performance of various parts of the process flow 100. The software agents 265, collectively, are responsible for efficiently scheduling and controlling the lots 130 of wafers 135 through the fabrication process. In furtherance of these objectives, the software agents 265 interface with the software components 270, 280 of the MES and AMHS, respectively, and are integrated with other existing factory control systems (not shown). The software agents 265, where appropriate, also interface with the process tools 115 and other equipment through a software implemented "equipment interface" ("EI") (not shown). As will be apparent to those skilled in the art having the benefit of this disclosure, the manner in which this interface and integration occurs is implementation specific, depending upon the makeup and configuration of the MES, the AMHS, and the other factory control systems.

Of particular interest to the present invention, the software agents 265 reactively schedule, initiate, and execute activities on behalf of their respective manufacturing domain entities. In the illustrated embodiment, the software agents 265 also proactively schedule activities. Collectively, the software agents 265, among other things, schedule ahead for each lot 130 one or more operations on a specific qualified process tool 115, including transports

Petitioner STMICROELECTRONICS, INC.,
Ex. 1006, IPR2022-00681, Pg. 13

and required resources, as discussed further below. This includes making optimizing decisions such as running an incomplete batch, as opposed to waiting for an approaching lot 130, and scheduling opportunistic **p**reventive **m**aintenance ("PM") procedures or qualification tests ("Quals") to meet specifications. The software agents 265 schedule and initiate activities such as lot transport and processing; perform MES transactions; monitor processing and transport; and react to unscheduled activities or deviations from scheduled activities. Furthermore, in the illustrated embodiment, the software agents 265 are configurable in a manner that allows a user to influence their behavior in order to tune the performance of the process flow 100.

In the illustrated embodiment, the scheduling agents 265 are typed by the manufacturing domain entities they represent. There may be many different types of scheduling agents 265, depending on the implementations. The principle types of scheduling agents 265 in the illustrated embodiment, shown in **FIG. 3**, include:

- a **L**ot **S**cheduling **A**gent ("LSA") 305 that schedules activities on behalf of lots 130 of wafers 135;
- a **M**achine **S**cheduling **A**gent ("MSA") 310 that schedules activities on behalf of process tools 115;
- a **PM S**cheduling **A**gent ("PMSA") 315 that schedules activities on behalf of PMs and Quals (not shown); and
- a **R**esource **S**cheduling **A**gent ("RSA") 320 that schedules activities on behalf of resources (not shown).

However, other types may be employed in addition to, or in lieu of, those shown. The roles and functions of each of these of scheduling agents 265 in the illustrated embodiment will be more fully discussed below.

Some of these activities are scheduled reactively, *i.e.*, in response to events occurring in, *e.g.*, the process flow 100, in accordance with the present invention. In one particular embodiment, this includes:

- detecting an occurrence of a predetermined event in a process flow, *e.g.*, the process flow 100;
- notifying a subscribing software scheduling agent, *e.g.*, the LSA 305, the MSA 310, the PMSA 315, or the RSA 320, of the occurrence; and

Petitioner STMICROELECTRONICS, INC.,
Ex. 1006, IPR2022-00681, Pg. 14

- reactively scheduling an action responsive to the detection of the predetermined event.

The predetermined event and the reactively scheduled action will be implementation specific. Several exemplary events and reactively scheduled actions are discussed further below.

Note that this type of reactive scheduling implies a knowledge that such events are occurring within the process flow 100. To this end, the software agents 265 respond to additional software components, not shown, known as "publishers" (or, "notifiers") and "subscribers." Agents create listeners which subscribe to one or more notifiers. Notifiers "publish" events to their subscribing listeners when changes occur within the factory. Listeners, in turn, call their subscribing software agent 265. For example, when a MSA is created, the agent will create a machine listener that subscribes to specific machine events. The MSA is interested in receiving any changes that occur to a particular machine. For example, if the availability of the machine changes, the publisher will publish the event to all of its listeners. The machine listener will then notify the subscribing MSA about the event. The subscribing MSA will then react appropriately.

More particularly, when the software agents 265 are created, they create listeners and subscribe to published events by adding the listeners to the event publisher. Listeners enable the software agents 265 to react to events in the process flow 100 in an appropriate manner. Table 1, below, lists the relevant software agents 265 employed in the illustrated embodiment, the listeners they create, and a description of their function. Note that the use of publishers and subscribers via listeners and notifiers in this manner is known to the art, and any suitable technique may be employed.

Table 1. Software Agents and Associated Listeners

Software Agent	Associated Listeners	Reason for Subscribing
RSA (*e.g.*, a resource loading agent)	Equipment Event Listener	Listens to events from the Equipment Interface. Events may include loading started, charging started, loading completed, charging completed, *etc.*

Petitioner STMICROELECTRONICS, INC.,
Ex. 1006, IPR2022-00681, Pg. 15

Software Agent	Associated Listeners	Reason for Subscribing
	Machine Listener	Listens to MES events that occur on the machine. For example, it listens when a machine is not available and reacts appropriately.
	Process Operation Listener	Listens to changes within a process operation since it might change the processing capability of a machine.
	Process Listener	Listens to changes within a process since it might change the processing capability of a machine.
	Alarm Listener	Listens to alarms that have been set at start or end times for scheduled activities.
	Schedule Advertisement Listener	Listens to "advertised" time slots for scheduled appointments that have not started.
	Appointment State Change Listener	Listens to any corresponding appointments on scheduling calendars of other agents that might affect its calendar.
LSA	Alarm Listener	Listens to alarms that have been set at start or end times for scheduled activities.
	Lot Listener	Listens to MES events that occur on the lot, such as product change, priority change, wafer count, and so on.
	AMHS Listener	Listens to changes in the location of the lot of represented by the LSA.
	Appointment State Change Listener	Listens to any corresponding appointments on scheduling calendars of other agents that might affect its calendar.
MSA	Alarm Listener	Listens to alarms that have been set at start or end times for scheduled activities.
	Process Operation Listener	Listens to changes within a process operation since it might change the processing capability of a machine.
	Machine Listener	Listens to MES events occurring on the machine. For example, it listens when a machine is not available.
	Appointment State Change Listener	Listens to any corresponding appointments on scheduling calendars of other agents that might affect its calendar.

Petitioner STMICROELECTRONICS, INC.,
Ex. 1006, IPR2022-00681, Pg. 16

Software Agent	Associated Listeners	Reason for Subscribing
	Chamber Listener	Listens to MES events that occur at chamber level, such as downtime, PM, or Quals.
	Process Listener	Listens to changes within a process since it might change the processing capability of a machine.
	Equipment Event Listener	Listens to events from the Equipment Interface. Events may include carrier arriving at the machine port, processing started, processing near complete, carrier departed, *etc.*
PM Scheduling Agent ("PMSA")	Chamber Listener	Listens to MES events that occur at chamber level, such as downtime, PM, or Quals.
	Machine Listener	Listens to MES events that occur on the machine. For example, it listens when a machine is not available.
	Qual Collection Listener	Listens to any new Quals or deleted Quals.
	PM Collection Listener	Listens for any new PMs or deleted PMs.
	Appointment State Change Listener	Tracks changes to any appointments that might affect his calendar.

As is evident from Table 1, the software agents 265 listed therein listen to appointment changes that might affect their calendar. Consider, for example, **FIG. 5** (discussed in more detail below) in conjunction with Table 1. **FIG. 5** illustrates different appointments (*$SETUP_1$*, *LOT_1*, *$MOVE_1$*, *$TOOL_1$*, *PM*, *QUAL*, *etc.*) that are contained within the calendars for each of several agents (the MSA for $TOOL_1$, the LSA for LOT_1, a PMSA, and a RSA). **FIG. 5** also illustrates corresponding appointments between those calendars. For example, the MSA calendar contains a processing appointment *LOT_1* that corresponds with the processing appointment *$TOOL_1$* on the LSA calendar. These two appointments are actually for the same event (*i.e.*, the processing of LOT_1 on $TOOL_1$) made by two different entities (*i.e.*, the MSA and the LSA, respectively) for two different entities (*i.e.*, the lot LOT_1 and the processing tool $TOOL_1$).

Referring now to both **FIG. 3** and **FIG. 5**, when corresponding appointments (*e.g.*, *LOT_1*, *$TOOL_1$*) are created, the appointments themselves may contain a collection of listeners, *e.g.*, the listeners 356, 358 in **FIG. 3**. Listeners are added to the appointment when other

Petitioner STMICROELECTRONICS, INC.,
Ex. 1006, IPR2022-00681, Pg. 17

software agents 265 want to be notified that the appointment has changed. In this case, the lot processing appointment LOT_1 on the MSA calendar 370 contains a listener 356 that notifies the LSA 305 through a notifier 354 when the processing appointment LOT_1 changes. On the other hand, the lot appointment $TOOL_1$ contains a listener 358 that notifies the MSA 310 through a notifier 352 when it changes. If the MSA 310 changes the processing appointment LOT_1, the LSA 305 will be notified of the appointment change and it will modify the appointment $TOOL_1$ accordingly. Thus, listeners enable the software agents 265 to synchronize the corresponding appointments. Also, the software agents 265 can schedule reactively to such predetermined events when appropriate and can then keep their calendars updated as changes are instituted by other software agents 265.

When the software agents 265 react to appointment changes, they carefully manipulate the corresponding appointments. In some cases, it would be inappropriate for two software agents 265 to manipulate their respective corresponding appointments at the same time. Thus, a single software agent 265 is responsible for manipulating its respective corresponding appointment, which will then prompt the software agent 265 of the corresponding appointment to manipulate its respective corresponding appointment. For example, in **FIG. 5**, the LSA 305 contains a move appointment $MOVE_1$ followed by the lot processing appointment $TOOL_1$. If the end time for the move appointment $MOVE_1$ arrives but the appointment is not finished, an alarm listener notifies the LSA 305. ("Alarms" are one type of event listened for, and are discussed further below.) The LSA 305 then expands the duration of the move appointment $MOVE_1$ by a configurable amount of time, but also shifts the lot processing appointment $TOOL_1$ to accommodate the expansion of the move appointment $MOVE_1$.

At the same time, the alarm listener for the MSA 310 will notify it that the start of the lot processing appointment $TOOL_1$ has arrived. Since the LSA 305 can best determine when the lot LOT_1 should arrive at the process tool 115, the LSA 305 shifts the start time of the lot processing appointment $TOOL_1$ after expanding the move appointment. The MSA 310 will wait for its appointment state change listener to notify it of the shift to the lot processing appointment, will find its counterpart lot processing appointment, and shift it accordingly. In this circumstance, the MSA 310 will ignore its own start time alarm. Although not shown, the lot 130, process tool 115, resources, and PMs and Quals all have corresponding

Petitioner STMICROELECTRONICS, INC.,
Ex. 1006, IPR2022-00681, Pg. 18

"processing" agents, also not shown, that are notified by the scheduling agents when significant events occur that may require processing.

In furtherance of their proactive and reactive scheduling duties, the software agents 265 maintain calendars, such as the calendar conceptually illustrated in **FIG. 4**, of scheduled "appointments." **FIG. 4** conceptually illustrates a calendar containing information concerning appointments for, *e.g.*, a process tool 115 for a number of lots 130. An "appointment" is a time period certain in which the process tool 115 has obligated itself to perform the process operation, and is defined by an Appointment Start Time ("*TS*") and an Appointment End Time ("*TE*"). In the illustrated embodiment, the appointments are booked within "**c**ommitment **w**indows" ("*CW*"), or time windows defined by an **E**arliest **S**tart **T**ime for processing ("*EST*") and a **L**atest **D**elivery **T**ime ("LDT_P"). The client lot 130 commits to arrive at the process tool 115 no later than the *EST* and the process tool 115 commits to complete the processing no later than the *LDT*. Note, however, that the use of commitment windows are not necessary to the practice of the invention.

In **FIG. 4**, the process tool 115 has booked appointments $APP_1 - APP_4$ for lots $Lot_1 - Lot_4$, respectively. Thus, the calendaring information for Lot_1-Lot_4 is as follows:

Lot_1: $APP_1[t_{10}, t_{12}]$, $CW_1[t_8, t_{14}]$

Lot_2: $APP_2[t_{13}, t_{15}]$, $CW_2[t_9, t_{16}]$

Lot_3: $APP_3[t_5, t_7]$, $CW_3[t_2, t_{11}]$

Lot_4: $APP_4[t_3, t_4]$, $CW_4[t_1, t_6]$

Note that, in the illustrated embodiment, several of the commitment windows overlap, but none of the appointments overlap. Appointments may be shifted within their commitment window, so long as they do not overlap other appointments, or may be expanded, shrunk, canceled and rescheduled as is discussed more fully below. However, in some embodiments, parts of the appointments may overlap.

Thus, returning to **FIG. 3**, appointments, *e.g.*, the processing appointment 375, are proactively booked on calendars, *e.g.*, the calendars 385, 370, maintained by each scheduling agent, *e.g.*, the scheduling agents 305, 310. Note, however, that not all appointments are processing appointments. Whenever the processing appointment 375 is booked, the LSA 305 schedules move appointments for moving the lots 130 to the location of the newly booked

Petitioner STMICROELECTRONICS, INC.,
Ex. 1006, IPR2022-00681, Pg. 19

processing appointment 375. For instance, referring to **FIG. 1** again, assume the lots 130 processing on the first process tool 115 exits from a port 140 and needs to arrive at the port 145 of the second process tool 115 for the scheduled processing appointment 375. Each LSA 305 schedules the appointments for the lot 130 to transit between the source and destination locations, *e.g.*, the port 140 of the first process tool 115 and the port 145 of the second process tool 115.

FIG. 5 conceptually illustrates three related calendars maintained for three different types of entities—a lot 130, a process tool 115, and a **p**reventive **m**aintenance ("PM")—on which different types of appointments are booked. In the illustration of **FIG. 5**, as opposed to the illustration of **FIG. 4**, all appointments for a given calendar are collapsed onto a single timeline. The commitment windows for each appointment are omitted to facilitate this collapse and to keep from unduly cluttering the illustration. More particularly, **FIG. 5** illustrates:

- a calendar for a process tool $TOOL_1$ maintained by a MSA for the process tool $TOOL_1$, including appointments booked for setups (*e.g.*, $SETUP_1$, $SETUP_2$); lot processing appointments (*e.g.*, LOT_1, LOT_2, LOT_3); PMs (*e.g.*, PM); and Quals (*e.g.*, QUAL);
- a calendar for a lot LOT_1 maintained by a LSA for the lot LOT_1 on which are booked appointments for moves (*e.g.*, $MOVE_1$, $MOVE_2$, $MOVE_3$, $MOVE_4$, $MOVE_5$) and lot processing appointments (*e.g.*, $TOOL_1$, $TOOL_2$); and
- a calendar for a PM maintained by a PMSA on which are booked appointments for PMs (*e.g.*, PM), and Quals (*e.g.*, QUAL).

Still other types of appointments may be booked. For instance, if the process tool $TOOL_1$ goes down, *i.e.*, is no longer available for processing, a "downtime appointment" may be booked on its calendar to represent the expected repair time. Note that each of these appointments in the calendar of **FIG. 5** is for an event that, in the first instance, the software agents 265 proactively schedule according to the manufacturing domain entity they represent.

An appointment, *e.g.*, the processing appointment 375 in **FIG. 3**, exists in one of several "states", or have a certain "status," at any given time. In the illustrated embodiment, the status may be:

Petitioner STMICROELECTRONICS, INC.,
Ex. 1006, IPR2022-00681, Pg. 20

- tentative—the appointment has been created, but not booked (which is discussed further below);
- unready—the tentative appointment has been booked, but is not ready for execution;
- ready—the lot 130 involved in the appointment has arrived at the process tool 115 for which it is booked;
- active—the start time for the appointment has arrived and all participants are ready;
- active PM/Qual—the start time for a following Qual portion of a PM appointment has arrived;
- processing—the scheduled activity has started, *i.e.*, the start command has been confirmed by the process tool 115, or the PM or Qual has started;
- processing PM/Qual—the follow-up Qual portion of a PM has started;
- near complete—the appointment is nearing completion as defined by predetermined parameters (*e.g.*, processing time remaining, wafer count);
- complete—processing is completed;
- canceled—booked appointment is removed from a calendar before it enters the processing status; and
- aborted—appointment was stopped during processing in a processing status.

A tentative appointment remains tentative until it is booked, whereupon it enters the unready status. The appointment is unready until the lot 130 arrives at the process tool 115. The appointment is then ready until the start time for the appointment arrives. The appointment then becomes active (*i.e.*, the appointment commences) until the process tool 115 confirms it has started processing. Once the appointment is processing, it retains that status until it nears completion and then is complete. If the appointment is removed from the calendar before entering the processing state, it is "canceled" and removed from the system. Once in the processing status, the appointment is "aborted" if halted. A completed appointment or an aborted appointment retains this status until it is removed from the system.

However, in accordance with the present invention, the software agents 265 also reactively schedule events for their respective manufacturing domain entities resulting from developments in the process flow 100. Typically, reactive scheduling by the software agents

Petitioner STMICROELECTRONICS, INC.,
Ex. 1006, IPR2022-00681, Pg. 21

265 effects changes to appointments that were, in the first instance, proactively scheduled. However, this is not necessary to the practice of the invention. For instance, in one particular embodiment, the software agents 265 schedule activities in reaction to a machine failure which causes the machine to stop processing and requires a period of downtime in order to repair the machine. There usually would not be any proactively scheduled appointment for such an event since a machine failure usually cannot be predicted in advance.

More particularly, the software agents 265 usually react to different events that occur within the process flow 100. These events are identified beforehand, *i.e.*, are "predetermined," so that appropriate activities in reaction to those events can be defined. The appropriate actions will depend on a number of factors including not only the type of manufacturing domain involved, but also the type of event that is involved. The predetermined events are categorized, in the illustrated embodiment, as one of three types: appointment state change, a factory state change, or an alarm event.

Appointment state changes usually occur when a software agent 265, *e.g.*, the scheduling agents 305, 310 change an appointment, *e.g.*, the processing appointment 375. A software agent 265 may change the status of the appointment, expand or shrink the appointment, cancel the appointment, shift the appointment, or perform other manipulations to the calendar or appointments on the calendar. When an appointment is changed, the appropriate agents 265 react to the change. For example, the MSA 310 may expand the scheduled duration of the appointment 375 on its calendar 370 due to the appointment 375 running late. The LSA 305 reacts to that change by expanding the corresponding appointment 375 on its calendar 385 to keep the appointments 375 synchronized across the two calendars 370, 385. Appointment state changes may include, for instance, appointment cancellations, appointment expansions, appointment shrinkage, appointment aborts, appointments changing status, appointments shifting, and commitment window updates.

Factory state changes usually occur when the state of the factory, *e.g.*, the process flow 100, changes. Factory state change events may originate from the MES 270 (shown in **FIG. 2**), the AMHS 280 (also shown in **FIG. 2**), or from the **E**quipment **I**nterface ("EI", not shown) for the process tools 115. Factory state changes may include lot due date changes, a lot being put on hold, changing the process or process operation of a lot, a lot's location

Petitioner STMICROELECTRONICS, INC.,
Ex. 1006, IPR2022-00681, Pg. 22

changing, a carrier arriving at a machine port, *etc.* For every factory state change that is a "predetermined event," the software agents 265 react accordingly. Exemplary factory state changes might include a downtime occurrence; a machine becoming available; a PM/Qual being detected; a chamber going down; a lot departing a machine; a move completed; and a wafer completed.

Alarm events occur, in this particular embodiment, when a specific alarm has expired. Agents react when an alarm event is received—for example, when the appointment end time has arrived for a lot appointment. If the machine agent does not receive notification that the appointment has ended, the machine agent will expand the appointment based on a configurable percentage of the appointment's total duration. Once the appointment is expanded, the machine agent will set a new alarm for the new, predicted end time of the appointment. An alarm event might be, for instance, an alarm firing for an appointment start time or an alarm firing for an appointment end time.

Note that some events are unplanned, or unexpected. For instance, there is no reliable way to actually know when a machine or chamber goes down unless it is going down for a scheduled PM or a Qual period. Some of these events are expected. For instance, the time at which a lot 130 arrives at the port 145 of the process tool 115 should be known if it arrives on time since the move was scheduled. Some embodiments may therefore choose not to schedule reactively to such an event, instead preferring to schedule proactively on the assumption the schedule will be met and scheduling reactively only if the schedule is not met. Note that other embodiments may schedule reactively to events not listed either in addition to or in lieu of those set forth herein.

The reactive scheduling performed upon the occurrence of any particular event will depend on the nature of the event and, to some degree, upon the particular implementation. Generally speaking, the reactive scheduling typically includes changing appointments, *e.g.*, the appointment 375 in **FIG. 3**, previously scheduled and booked. Booked processing appointments and PM/Qual appointments may be shifted, expanded, aborted, shrunk, canceled, and re-scheduled. Move and setup appointments are modified as needed at the time lot processing appointments are modified. In the illustrated embodiment, these appointment modifications are performed by the LSA 305 or the MSA 310.

Petitioner STMICROELECTRONICS, INC.,
Ex. 1006, IPR2022-00681, Pg. 23

For example, booked processing appointments may be shifted, which may cause booked move appointments to be canceled, aborted, or rescheduled. Appointments are viewed as "beads on a string". Existing appointments are permitted to slide backward or forward in time (*i.e.*, "right" or "left" in **FIG. 4** and **FIG. 5**) within their respective commitment windows as desired to accommodate changes in scheduling. In the illustrated embodiment, to simplify the logic, appointments are not permitted to shift past the next appointment in either direction.

Consider the circumstance where a lot processing appointment for a lot 130 completes earlier than expected. This provides an opportunity for the MSA 310 to reactively schedule what is known as an "early start." Because the MSA 310 in **FIG. 3** is idle, the MSA 310 will attempt to shift the next appointment to an earlier start time and start it immediately. When the lot 130 completes the processing appointment early, the MSA 310 reacts by shifting subsequent scheduled appointments earlier in time to take advantage of the early start opportunity. The LSA 305 will react differently to the event of the lot processing completing early.

This instance is shown in **FIG. 6A**, wherein the current time t_c falls within the commitment window CW_1 for the next appointment APP_1. The next appointment APP_1 is then shifted left, or earlier in time, so that its processing can begin immediately. If the next booked appointment cannot be shifted to start at the current time, the MSA 310 will search for any other booked appointments that may have commitment windows starting at the current time or earlier. If one of these booked appointments can be moved to start immediately without causing cancellation of any other booked appointments, the booked appointment will be moved in a "jump over" fashion and other booked appointments will be shifted as required. This scenario is shown in **FIG. 6B**, wherein the current time t_c at which the provider is idle is outside the commitment window CW_1 for the next booked appointment APP_1, but falls within the commitment window CW_3 of the third booked appointment APP_3. Hence, the third appointment APP_3 performs a "jump over" operation, jumping over appointments APP_1 and APP_2 and appointment APP_1 is shifted right to a later start time immediately following appointment APP_3.

Petitioner STMICROELECTRONICS, INC.,
Ex. 1006, IPR2022-00681, Pg. 24

In either situation, the LSAs 305 for the affected lots 130 are notified by that their appointments have been changed. The difference in start times and end times may also change the appropriateness of scheduled moves. For instance, if a booked appointment is shifted left, the earlier start time means the lot 130 must arrive earlier than may be provided for by the currently scheduled moves. Conversely, a later start time means the lot 130 should move later. In either circumstance, modified moves may be appropriate to achieve the correct arrival time for the lot 130.

Consider also the circumstance where the software agents 265 reactively schedule because the duration of a current appointment, or an appointment immediately preceding it, is longer than expected. When the LSA 305 and MSA 310 book appointments, they set an "end-time alarm" (not shown) that notifies them when the appointment is scheduled to be completed. When the task is completed, the scheduling agents 305, 310 are notified and these alarms are canceled. Thus, if the alarm fires, then the scheduling agents 305, 310 know the appointment did not complete at the scheduled time, and that the appointment needs to be expanded.

FIG. 7A and **FIG. 7B** illustrate two such situations. The timelines for the appointments in each have been collapsed and the commitment windows are omitted as was the case for the calendars in **FIG. 5**. In **FIG. 7A**, the move $MOVE_3$ had a longer duration than was expected, and so the moves $MOVE_4$, $MOVE_5$ and the appointment APP_2 were shifted later in time to accommodate this longer duration. In **FIG. 7B**, the appointment APP_3 took longer than was expected, and so the appointments APP_4 and APP_5 were shifted later in time. Note that in both **FIG. 7A** and **FIG. 7B**, the illustrated changes necessarily imply that, in both circumstances, the commitment windows for the changed appointments were wide enough to accommodate the changes. Otherwise, some appointments would have to be canceled.

As can be seen from these two examples, the reactive scheduling will vary according to the circumstance. In general, in the illustrated embodiment, the following scheduling activities may occur responsive to a predetermined event:

- aborting a scheduled appointment in progress;
- canceling a scheduled appointment before it begins;

Petitioner STMICROELECTRONICS, INC.,
Ex. 1006, IPR2022-00681, Pg. 25

- scheduling a new appointment;
- starting a scheduled appointment;
- expanding the duration of a scheduled appointment;
- shrinking the duration of a scheduled appointment;
- shifting a scheduled appointment to an earlier or later time;
- changing a commitment window;
- changing an appointment attribute (*e.g.*, transport start time, remaining transport time, *etc.*);
- setting an alarm;
- canceling an alarm; and
- changing the status of an appointment.

The "predetermined events" provoking such reactive scheduling may include, for an appointment state change:

- canceling an appointment;
- expanding an appointment;
- shrinking an appointment;
- aborting an appointment;
- an appointment changing status;
- shifting an appointment;
- an unexpected carrier arrival;
- a transport time update;
- a load time update;
- an unload time update;
- a lot joining a batch;
- a lot leaving a batch;
- canceling a lot from a batch; and
- updating a commitment window.

For a factory state change, the predetermined event might be, for example:

- detection of downtime;
- a machine becoming available;
- a PM/Qual being detected;

Petitioner STMICROELECTRONICS, INC.,
Ex. 1006, IPR2022-00681, Pg. 26

- a chamber going down or coming up;
- a change in machine capabilities;
- a change in machine types;
- addition of a process;
- addition of a process operation;
- a lot process changed;
- a lot placed on hold;
- a lot relesed from hold;
- a lot priority changed;
- a lot due date changed;
- a lot wafer count changed;
- a lot process operation changed,and
- a lot departing from or arriving at a machine.

And, for an alarm event, the predetermined event might be:

- an alarm firing for an appointment start time; and
- an alarm firing for an appointment end time.

Note that these lists are not exhaustive, but illustrative only. The identity of predetermined events will be implementation-specific, and so may vary among embodiments. Typically, depending on the event provoking the reactive scheduling, these activities will be employed in combination, or in the alternative, conditionally. Tables 2-5 list the predetermined events, their type, and their reactive scheduling activities for machine, lot, PM, and resource scheduling agents, respectively, for one particular implementation of the present invention.

Tables 2, Table 3, and Table 5 refer one or more of load/unload operations and appointments and charge/discharge operations and appointments. As will be appreciated by those skilled in the art having the benefit of this disclosure, some process tools 115 perform lot batch process operations in which multiple lots 130 are simultaneously processed in a batch. Some of these process tools 115 use load, charge, discharge and unload steps. For instance, a process tool 115 may first load all the batch participants, *i.e.*, lots 130, from the tool I/O ports (not shown) to the tool internal stocker (also not shown). Usually this type of process tool 115 has multiple I/O ports, and the load/unload operations are also performed in batches. After all the batch participants are loaded, the process tool 115 performs a batch

Petitioner STMICROELECTRONICS, INC.,
Ex. 1006, IPR2022-00681, Pg. 27

charge operation to move the batch participants from the internal stocker into, *e.g.*, a furnace tube (not shown) before the processing can actually begin. After the process tool 115 completes the batch process operation, it discharges the batch participants, *e.g.*, from the furnace tube back into the internal stocker. Finally when the lots 130 are ready to be moved to the tool I/O ports, a sequence of batch unload operations is performed.

Table 2 also refers to appointments that are "locked." To help prevent undesirable appointment shifting, the illustrated embodiment employs an appointment locking mechanism. Generally speaking, when a lot 130 starts its final move from a source location to a process tool 115, it is undesirable to have a new appointment jumping in front of it by canceling or shifting that appointment to the right, or later in time. To prevent this from occurring, the MSA "locks" the lot processing appointment when the lot 130 starts its final move. Note that locked appointments nevertheless sometimes do need to be shifted. For instance, assume two appointments are booked on the calendar for a particular process tool 115, and the first one is processing while the lot 130 for the second one has started the final move to the process tool 115. The second appointment is locked because it is in its "final" move to the process tool 115. If the first appointment runs long and must be expanded, the second one must first be shifted to permit the first one to expand. Thus, the locked second appointment must be shifted even though this is generally undesirable. In general, however, appointments may be "locked" in certain circumstances to prevent them from being shifted or canceled.

Table 2. Reactive Scheduling Activities for MSAs

Event	Event Type	Reactive Scheduling Activities

Petitioner STMICROELECTRONICS, INC.,
Ex. 1006, IPR2022-00681, Pg. 28

Event	Event Type	Reactive Scheduling Activities
Downtime Detected	Factory State Change (MES)	A downtime event may indicate the machine is currently not available for processing or that an error has occurred during processing. If the MSA detects that the machine is not currently available for processing, the MSA will abort and shrink any lot processing appointment that is processing. It will then book a downtime appointment after the aborted lot processing appointment or after the unload appointment. If the downtime event occurred due to an error during processing, the MSA will book a downtime appointment after the lot processing appointment that is processing or the unload appointment. Booked processing appointments overlapping the downtime appointment are shifted later in time, if possible, or are otherwise cancelled.
Machine Available Detected	Factory State Change (MES)	Any active PM, QUAL, or downtime appointments are completed. The next appointment on the machine's calendar is then shifted and started, if possible.
PM/Qual Detected	Factory State Change (MES)	A PM/Qual appointment is booked after any active appointments. Any booked appointments overlapping the PM/Qual appointment are shifted after the PM/Qual appointment. If any overlapping booked appointment cannot shift, it is cancelled.
Chamber Down Detected	Factory State Change (MES)	All unready appointments for the machine or chamber that has not started are canceled.
Chamber Up Detected	Factory State Change (MES)	The duration for any appointment is shrunken to the expected completion time based on the new throughput rate and shifted to the right, or later in time, if possible.
Lot Not At a Port At a Scheduled Start Time	Alarm State Change	If the lot has "reserved" a port with the machine, the MSA will wait until the LSA expands the move appointment. The expansion of the move appointment will cause the LSA to shift the lot appointment to the right. The MSA will then react appropriately to the shifting of the lot appointment. If the lot has not reserved the port, the appointment is cancelled.

Petitioner STMICROELECTRONICS, INC.,
Ex. 1006, IPR2022-00681, Pg. 29

Event	Event Type	Reactive Scheduling Activities
Lot Arrived at Machine Port	Factory State Change (EI)	If the lot arrived at the right location, the MSA will make the appointment active if it is not a participant of a batch appointment. If the appointment is a participant of a batch appointment, the MSA will make the appointment ready. If the machine is idle and the appointment is active, the MSA will start processing the appointment. (Note: a participant of a batch appointment is made active when all of the participants have arrived at the machine.) If the lot arrived at the right machine but the wrong port, the MSA will check to see if a different lot reserved the port. If a different lot reserved the port, the MSA will assign that lot the next available port. If the appointment for the arriving lot is active, the MSA will start processing the appointment. If the lot arrived at the wrong machine, the MSA will check to see if a different lot reserved the port. If a different lot reserved the port, the MSA will assign that lot the next available port. The machine will then book an appointment for the lot just arrived. Any overlapping appointments will be shifted to a later time. If an overlapping appointment cannot shift later in time, it will be cancelled.
Lot Processing Appointment Running Late	Alarm State Change	If a lot processing appointment is running late, it is expanded and any overlapping booked appointments are shifted to the right, or later in time. If any overlapping booked appointment cannot shift right and the appointment is not locked, it is cancelled. If the appointment is locked and cannot shift right, the appointment's commitment window will be expanded to allow the shift to occur.
Lot Processing Completing Early	Factory State Change (EI)	If a lot processing appointment completes earlier than expected, the appointment is shrunk and completed and, if possible, the next appointment is shifted earlier in time. If the next appointment can shift to the current time, it will start that appointment.
Lot Processing Near Complete Detected	Factory State Change (EI)	The MSA calculates the remaining processing time for the lot. If it is going to finish early, the appointment is shrunken to the new end time and any following appointments are shifted left, or earlier in time. If it is going to finish late, the appointment is expanded to the new end time and any overlapping appointment are shifted to a later time or cancelled.
Lot Appointment Cancelled	Appointment State Change	If processing or near complete, the appointment is aborted or, if unready, simply canceled. Upon cancellation of an appointment, the next appointment is shifted earlier in time, if possible, to reduce any gaps between appointments.
Lot Departing Machine Port	Factory State Change (EI)	If the lot was still processing at the time of its departure, the appointment is aborted and the end time shifted earlier in time. The next appointment is shifted earlier as much as possible.

Petitioner STMICROELECTRONICS, INC.,
Ex. 1006, IPR2022-00681, Pg. 30

Event	Event Type	Reactive Scheduling Activities
Shift Appointment Right	Appointment State Change	The appointment is shifted right. If it cannot be shifted right, it is canceled, unless it is locked. If it is locked, any appointment blocking the right shift are cancelled

Table 3 refers to "feeder operations." In a partially automated fab, only a portion of the process operations may be scheduled and controlled by the software agents 265. Thus, only a subset of the process tools 115 in the fab are under the control of the software agents 265 and the fab is not fully under the control of this system. Those process operations controlled by the software agents 265 are called "control process operations." Immediately before each control process operation, a sequence of "feeder" operations can be derived from a configurable percentage of the process time of the controlled process operation. Feeder appointments are used in determining the earliest start time for an appointment being scheduled ahead. More particularly, feeder appointments are used when a LSA is scheduling ahead and the time has not yet arrived for scheduling the feeder operation with an actual process tool 115. Feeder appointments are used to represent processing activities for those feeder operations with the duration equal to the cycle time of the respective feeder operations.

Table 3 also refers to "maxMove" appointments. For a feeder operation, the specific process tool 115 that will perform the final feeder operation is not known until the lot 130 begins processing at the final feeder operation. A "maximum move" appointment represents transport activities from the last feeder process tool 115 to a controlled process tool 115. In one embodiment, the duration of the maximum move appointment is derived by the worst case transport time between the last feeder process tool station 105 and the controlled process tool station 105. When the last feeder appointment is activated, the actual process tool 115 performing the last feeder operation is known, and thus the maximum move appointment will be replaced by a move appointment or a sequence of move appointments.

Table 3 furthermore refers to a "bid request." In the illustrated embodiment, the process flow 100 employs a protocol for scheduling appointments that begins with a "bid request." The LSA 305 publishes a "request bid" message to a capable MSA 310. The MSA 310 submits one or more bids to the LSA 305. The LSA 305 selects one from among several such bids, which typically results in one or more "appointments" associated with performing the operation the LSA 305 is seeking for its lot 130 of wafers 135. Note, however, that other

Petitioner STMICROELECTRONICS, INC.,
Ex. 1006, IPR2022-00681, Pg. 31

protocols may be employed in which there is no "bid request." Thus, the bid request is an implementation specific feature that may not be found in all embodiments.

Table 3. Reactive Scheduling Activities for LSAs

Event	Event Type	Reactive Scheduling Activities
Appointment End Time Alarm Fired For Move Appointment	Alarm Event	The alarm indicates that the scheduled end time of the move appointment has arrived. The LSA determines if the move appointment should be expanded. If the move originates from a machine port, move appointment expansion is always permitted to clear the port. Otherwise, the move appointment is expanded a percentage (*i.e.*, 25%) of the originally scheduled duration until a maximum expansion percentage has been reached (*i.e.*, 175%). When the maximum expansion percentage has been reached, the appointment is aborted. If the move appointment is expanded, subsequent booked appointments are shifted later in time. A new end time alarm is then set for the expanded move appointment.
Appointment End Time Alarm Fired For Feeder Appointment	Alarm Event	The alarm indicates that the scheduled end time of the feeder appointment has arrived. The LSA will expand the appointment by a configurable percentage. Any subsequent feeder appointments (if any) will be shrunk by the amount that this feeder appointment expanded (can't shrink a feeder duration to be less than the process time for the operation). As a last resort, appointments after the final feeder appointment will be shifted to a later time.
Appointment Start Time Arrived For Move Appointment	Alarm Event	This alarm indicates that the scheduled start time of the specified move appointment has occurred. The LSA will make the appointment active if it is not active and the AMHS move will be initiated. If the appointment is the final move before a lot appointment, the LSA will ask a MSA to reserve a port and lock the appointment. It will also appropriately update the total transport time and remaining transport time. The LSA will then create an appointment end time alarm.
Appointment Start Time Arrived For Feeder Appointment:	Alarm Event	This alarm indicates that the scheduled start time of the specified feeder appointment has occurred. The LSA will make the appointment active if it is not active. The LSA will then create an appointment end time alarm.
Lot Appointment	Appointment	The LSA cancels the lot appointment and any non-

Petitioner STMICROELECTRONICS, INC.,
Ex. 1006, IPR2022-00681, Pg. 32

Event	Event Type	Reactive Scheduling Activities
Cancelled	State Change	active moves associated with the lot appointment. It will also cancel all load and unload appointments associated with the lot appointment and appropriately cancel any alarms as necessary. The LSA then reschedules the cancelled appointment(s).
Expand Lot Appointment	Appointment State Change	The MSA initiates this change when the lot appointment is running long. The LSA will react to this change by shifting all appointments to the right, or later in time, after the lot processing appointment being expanded. It will then expand the lot appointment to the specified time.
Make Lot Appointment Aborted	Appointment State Change	The MSA initiates this change when the processing of the lot has been interrupted. The LSA will change the status of the appointment to aborted, put the lot on hold, and schedule a move appointment to a sorter or a stocker after canceling all appointments.
Make Unload Appointment Aborted	Appointment State Change	The LSA will change the status of the unload appointment to aborted.
Make Load Appointment Aborted	Appointment State Change	The LSA will change the status of the load appointment to aborted.
Make Lot Appointment Processing	Appointment State Change	The MSA initiates this change when the processing of the lot has started. The LSA will change appointment to the processing status, inform the lot processing agent to start processing the appointment.
Make Load Appointment Processing	Appointment State Change	The LSA will change appointment to the processing status, and inform the lot processing agent.
Make Unload Appointment Processing	Appointment State Change	The LSA will change appointment to the processing status, and inform the lot processing agent .
Make Lot Appointment Completed	Appointment State Change	The MSA initiates this change when the lot has completed processing and may shrink the appointment if appropriate. The LSA will notify the processing agent, change the status to completed, ensure that a post control move appointment has been scheduled, and, if not, it will create one. It initiates the next appointment.
Make Load Appointment Completed	Appointment State Change	The LSA will notify the processing agent and change the status to completed. It initiates the next appointment.
Make Unload Appointment Completed	Appointment State Change	The LSA will notify the processing agent and change the status to completed. It initiates the next appointment.
Make Move Appointment	Appointment State Change	The LSA will make the appointment completed and may shrink the appointment if appropriate. It will

Petitioner STMICROELECTRONICS, INC.,
Ex. 1006, IPR2022-00681, Pg. 33

Event	Event Type	Reactive Scheduling Activities
Completed		also cancel the end time alarm, appropriately updates the transport start time, and initiates the next appointment.
Make Lot Appointment Near Complete	Appointment State Change	The MSA initiates this change when it receives an equipment event stating that the lot processing is near complete. The LSA will change the status of the appointment to near complete. It will then schedule the post control move appointment and invokes scheduling for the next process operation if appropriate.
Shift Lot Appointment Left	Appointment State Change	The LSA will try to move the lot appointment to the left, or earlier in time. If it is unable to shift left, the system will cancel all non-active move, load, and unload appointments and then cancels the lot appointment.
Shift Load Appointment Left	Appointment State Change	The LSA will try to move the load appointment to the left. If it is unable to shift left, the system will cancel all non-active move appointments, cancels unload/load appointments, cancels the lot appointment.
Shift Unload Appointment Left	Appointment State Change	The LSA will try to move the unload appointment to the left. If it is unable to shift left, the system will cancel all non-active move appointments, cancels unload/load appointments, and cancels the lot appointment.
Shift Lot Appointment Right	Appointment State Change	The LSA will check to see if the first appointment is a move appointment. If it is a move appointment and it is not active or on a machine or machine port, it will shift that move appointment to make it arrive at the start of the lot appointment or load appointment (if the move appointment is active, it will expand the end to the start of the lot appointment or load appointment). It will then shift any preceding appointments to the right. If the system is unable to shift the appointments right, it will cancel all non-active move appointments, any load/unload appointment, and the lot appointment.
Shift Load Appointment Right	Appointment State Change	The LSA will check to see if the previous appointment is a move appointment. If it is a move appointment and it is not active or on a machine or machine port, it will shift that move appointment to make it arrive at the start of the load appointment (if the move appointment is active, it will expand the end to the start of the load appointment). It will then shift any preceding appointments to the right. If the system is unable to shift the appointments right, it will cancel all non-active move appointments, any

Petitioner STMICROELECTRONICS, INC.,
Ex. 1006, IPR2022-00681, Pg. 34

Event	Event Type	Reactive Scheduling Activities
		load/unload appointments, and the lot appointment.
Shift Unload Appointment Right	Appointment State Change	The LSA will shift appointments to the right. If the system is unable to shift the appointments right, it will cancel the lot appointment, which will cancel all move, load, and unload appointments association with the lot appointment.
Shrink Lot Appointment	Appointment State Change	The LSA will shrink the lot appointment to the specified time and shift subsequent move appointments earlier in time.
Shrink Load Appointment	Appointment State Change	The LSA will shrink the load appointment to the specified time.
Shrink Unload Appointment	Appointment State Change	The LSA will shrink the unload appointment to the specified time.
Unscheduled Move Completed	Factory State Change (AMHS)	If the current location of the lot is a machine port, then the system will cancel all appointments except the lot appointment. The lot appointment will only be cancelled if the appointment was for a different machine. If the appointment was for a different machine, the LSA will cancel all appointments and wait for the MSA to invoke override scheduling. Otherwise, the system will determine how long it will take for the lot to get back to the next processing appointment destination. If the lot can still make its processing start time, then the system will reschedule the appropriate move appointments. If the lot is unable to make the start time, it will cancel all move, load, unload, and lot appointments and will initiate scheduling.
Update Commitment Window For Lot Appointment	Appointment State Change	The LSA will update the lot appointment commitment window appropriately. The commitment window represents the lots earliest start time and latest delivery time for a given appointment. The commitment window is updated if an appointment is processing late and the new end time exceeds the latest delivery time of the appointment.
Update Load Time For Load Appointment	Appointment State Change	The LSA will update the load start time and remaining load time appropriately on the load appointment.
Wrong Move Completed	Appointment State Change	If the current location of the lot is a machine port, then the system will cancel all appointments except for the lot appointment. The lot appointment will only be cancelled if the appointment was for a different machine. If the appointment was for a different machine, the LSA will cancel all appointments and wait for the MSA to invoke override scheduling. Otherwise, the system will

Petitioner STMICROELECTRONICS, INC.,
Ex. 1006, IPR2022-00681, Pg. 35

Event	Event Type	Reactive Scheduling Activities
		determine how long it will take for the lot to get back to the next processing appointment destination. If the lot can still make its original processing start time, then the system will reschedule the appropriate move appointments. If the lot is unable to make the start time, it will cancel all move, load, unload, and lot appointments and will initiate scheduling.
Lot Due Date Change	Factory State Change (MES)	If the lot has a processing appointment active, cancel appointments after either current appointment or following unload appointment (if present). If the appointment is in "near complete" status and the next process operation is not a control operation or there is no next operation in the process, schedule a move appointment after the current lot processing appointment. Otherwise, attempt to schedule the next process operation. If the lot has a move appointment active and the move is to a machine port destination, cancel appointments after the following load appointment (if present) and following lot processing appointment. Otherwise, cancel all appointments after the move appointment and reschedule the current process operation. If the lot has a feeder appointment active, cancel all appointments after the feeder appointment and reschedule the next process operation. If the lot has a load appointment active, cancel appointments after the following lot appointment or load appointment (if present.) If the lot has an unload appointment active, cancel appointments after the current time. If the next operation is not a control operation or there are no more operations, schedule a move appointment after the unload appointment. Reschedule for the next process operation. If no appointments are active, cancel all future appointments and reschedule current process operation.
Lot put on Hold	Factory State Change (MES)	If lot is processing, cancel appointment after post move appointment. If lot is moving to control machine port, cancel all appointments after the move and schedule a move to the nearest stocker as soon as the lot arrives at the machine port. If unload appointment is processing, cancel all appointments after and schedule post move. If feeder appointment is processing, shrinks and aborts the appointment and

Petitioner STMICROELECTRONICS, INC.,
Ex. 1006, IPR2022-00681, Pg. 36

Event	Event Type	Reactive Scheduling Activities
		then cancels all appointments after feeder appointment. If load appointment is processing, it cancels all appointments after except for the unload appointment. It will then schedule a post move appointment. If the lot has a processing appointment active, and it is in a status of processing or near complete, it is allowed to complete. If the next appointment is an unload appointment, all subsequent appointments are cancelled and a move is scheduled after the unload. If the next appointment is a move appointment, it and subsequent appointments are cancelled and another move is scheduled. If there are no subsequent appointments, a move is scheduled after the processing appointment. If the lot appointment is active but not processing or complete, it is shrunk and aborted. If the next appointment is an unload appointment, subsequent appointments are cancelled and a move appointment is scheduled. If the next appointment is a move appointment, it is cancelled and another move appointment is scheduled. If there are no next appointments, a move appointment is scheduled. If the lot is in a feeder appointment, it is shrunk and aborted and all subsequent appointments cancelled. If the lot is in a load appointment and it is in a processing status, the subsequent lot processing appointment is cancelled. The following unload appointment is left and all subsequent appointments cancelled. A move appointment is scheduled after the unload appointment (both will later shift earlier in reaction to appointment changes initiated by the RSA). If the load appointment is not processing, it and subsequent appointments are cancelled and a move appointment is scheduled. If the lot is in an unload appointment, all subsequent appointments are cancelled and a move appointment is scheduled after the unload appointment. If the lot is in a move appointment and the move has started, all subsequent appointments are cancelled. If the move is to a machine port, a move is scheduled to subsequently transport the lot off the machine port.

Petitioner STMICROELECTRONICS, INC.,
Ex. 1006, IPR2022-00681, Pg. 37

Event	Event Type	Reactive Scheduling Activities
		If the lot is on a move appointment that has not started, the move appointment is aborted and all subsequent appointments cancelled.
Process Changed	Factory State Change (MES)	If the lot has a processing appointment active, cancel appointments after either current appointment or following unload appointment (if present). If the appointment is in "near complete" status and the next process operation is not a control operation or there is no next operation in the process, schedule a move appointment after the current lot processing appointment. If the appointment is near complete and the next operation is a control operation, attempt to schedule the next process operation. If the lot has a move appointment active and the move is to a machine port destination, cancel appointments after the following load and unload appointments (if present) and following lot processing appointment. Otherwise, cancel all appointments after the move appointment and reschedule the current process operation. If the lot has a feeder appointment active, cancel all appointments after the feeder appointment and reschedule the next process operation as well as any preceding feeder appointments. If the lot has a load appointment active, cancel appointments after the following unload appointment. If the lot has an unload appointment active, cancel appointments after the current time. If the next operation is not a control operation or there are no more operations, schedule a move appointment after the unload appointment. Reschedule for the next process operation. If no appointments are active, cancel all future appointments and reschedule current process operation.
Process Operation Changed	Factory State Change (MES)	The LSA will remove all non-active appointments. The LSA will then check to see if the new process operation is a control or feeder process operation. If the process operation is a feeder, then the agent will schedule the next process operation. If the process operation is a control and the agent doesn't have an appointment for this process operation, it will schedule this process operation.

Petitioner STMICROELECTRONICS, INC.,
Ex. 1006, IPR2022-00681, Pg. 38

Event	Event Type	Reactive Scheduling Activities
		If the lot has a processing appointment active, cancel appointments after either current appointment or following unload appointment (if present). If the appointment is in "near complete" status and the next process operation is not a control operation or there is no next operation in the process, schedule a move appointment after the current lot processing appointment. If the appointment is near complete and the next operation is a control operation, attempt to schedule the next process operation. If the lot has a move appointment active and the move is to a machine port destination, cancel appointments after the following load and unload appointments (if present) and following lot processing appointment. Otherwise, cancel all appointments after the move appointment and reschedule the current process operation. If the lot has a feeder appointment active, cancel all appointments after the feeder appointment and reschedule the next process operation as well as preceding feeder appointments. If the lot has a load appointment active, cancel appointments after the following unload appointment. If the lot has an unload appointment active, cancel appointments after the current time. If the next operation is not a control operation or there are no more operations, schedule a move appointment after the unload appointment. Reschedule for the next process operation. If no appointments are active, cancel all future appointments and reschedule current process operation.
Wafer Count Decreased	Factory State Change (MES)	If the wafer count for a lot decreases, the MSA shrinks lot appointments on its calendar that have not yet started. The MSA will try to shrink the appointment by the proper amount. The MSA cancels any unstarted lot appoitment that cannot be shrunk. The LSA subsequently reacts to the appointment changes made by the MSA, depending on the what the changes are.
Wafer Count Increased	Factory State Change (MES)	If the wafer count for a lot increases, the MSA expands lot appointments on its calendar that have not yet started. The MSA will try to expand the appointment by the proper amount. The MSA

Petitioner STMICROELECTRONICS, INC.,
Ex. 1006, IPR2022-00681, Pg. 39

Event	Event Type	Reactive Scheduling Activities
		cancels any unstarted lot appointment that cannot be expanded. The LSA subsequently reacts to the appointment changes made by the MSA, depending on the what the changes are.
Lot Terminated	Factory State Change (MES)	The system will cancel all appointments for the lot.
Lot Moved In	Factory State Change(MES)	If the lot moves in to a feeder operation that is not the first feeder operation of the segment, the LSA will adjust the appointment's end time to equal the current time plus the process time for that operation. It will then set an end time alarm. If the feeder operation is the last feeder, the LSA will replace the max move appointment with an appropriate move appointment and updates the remaining transport time.
Lot Moved Out	Factory State Change	If the operation that the lot changed from is a feeder operation, the LSA will completely shrink the feeder appointment and cancel subsequent feeder and maxMove appointments, and schedule the next operation and any preceding feeder appointments. If the operation that the lot changed from is a control operation, no action is taken (next operation would have been scheduled at near completion). If the operation the lot changed from is a normal (not control or feeder) operation, the LSA will schedule the operation to which the lot changed.
Experimental **R**equest **F**orm ("ERF") Status Change	Factory State Change (MES)	An ERF includes special instructions on how to process a particular lot. An ERF may be attached to or removed from a lot, and the LSA is notified when this happens. The LSA will notify each lot processing appointment's MSA and subsequently react to appointment state changes (if lot no longer compatible with any future batch appointments in which it may be participating).
Override Lot Appointment	Factory State Change	A bid request and an appointment change listener are created and returned to the MSA. (This is in response to an unscheduled lot being placed on a machine port.)
Machine Advertises a Time Slot	Appointment State Change	LSA will determine if it can improve its processing appointment for the operation at the new time slot. If so, then the LSA cancel the appointment and publishes a submit bid message in attempt to reschedule the appointment for the advertised time slot.

Petitioner STMICROELECTRONICS, INC.,
Ex. 1006, IPR2022-00681, Pg. 40

Table 4. Reactive Scheduling Activities for PM Scheduling Agents

Event	Event Type	Reactive Scheduling Activities
PM/Qual Appointment Cancelled	Appointment State Change	The PM appointment is canceled and rescheduled.
Expand PM/Qual Appointment	Appointment State Change	The MSA initiates this change when the PM appointment is running long. The PMSA will react to this change by shifting all appointments to the right of the PM processing appointment being expanded. The appointments that cannot be shifted are canceled and rescheduled. It will then expand the PM appointment to the specified time.
Make PM/Qual Appointment Aborted	Appointment State Change	The MSA initiates this change when the processing of the PM has been interrupted. The MSA will change the status of the appointment to aborted. The PMSA will reschedule the appointment.
Make PM/Qual Appointment Processing	Appointment State Change	The MSA initiates this change when the MSA learns the PM has started. The MSA will change appointment to a processing status.
Make PM/Qual Appointment Completed	Appointment State Change	The MSA initiates this change when the PM has completed processing and may shrink the appointment if appropriate. The PMSA will notify the processing agent, change the status to completed, and update the last occurrence of the PM with the current wafer count on the machine or current time.
Make PM Appointment Active PM/Qual	Appointment State Change	The MSA initiates this change when it is time for the following Qual to start. The PMSA will change the status of the appointment to "active".
Make PM Appointment Processing PM/Qual	Appointment State Change	The MSA initiates this change when it receives a Factory State Change indicating the Qual portion of the PM appointment has started. The PMSA will change the status of the appointment to processing PM/Qual.
Shift PM/Qual Appointment Left	Appointment State Change	The PMSA will try to move the PM appointment to the left. If it is unable to shift left, the system will cancel the appointment and reschedule it.
Shift PM/Qual Appointment Right	Appointment State Change	The PMSA will try to move the PM appointment to the right. If it is unable to shift right, the system will cancel the appointment and reschedule it.
Shrink PM/Qual Appointment	Appointment State Change	The PMSA will shrink the PM appointment to the specified time.
Update Commitment	Appointment State	The PM appointment commitment window is

Petitioner STMICROELECTRONICS, INC.,
Ex. 1006, IPR2022-00681, Pg. 41

Event	Event Type	Reactive Scheduling Activities
Window For PM/Qual Appointment	Change	updated. The commitment window represents the PMs earliest start time and latest delivery time for a given appointment.
Override PM/Qual Appointment	Appointment State Change	The PM appointment is cancelled within the calendar if it exist. It will then create a bid request and appointment change listener and return it to the MSA. This is in response to an unscheduled PM being started.
MES Machine Event Detected	Factory State Change	The PMSA will appropriately update the number of occurrences of the event within any PM or Qual that depends on this event. It will then schedule any PMs or Quals triggered by the event occurrence what are not currently scheduled on its calendar.
Lot Processing Completed on Machine	Factory State Change	The PMSA will reevaluate the commitment windows for all PMs or Quals that are scheduled based on a count of material processed. If the commitment window is invalid, the PMSA will either update the commitment window if the PM or Qual is scheduled within the new window, or it will cancel the existing appointment and reschedule within the new window. It will also schedule any PMs or Quals based on a count of material processed that have reached their trigger point and have not been schedule previously.
Alarm Fired	Alarm Event	The PMSA will schedule any time-based PM or Qual that has reached its trigger point and was not previously scheduled.

Table 5. Reactive Scheduling Activities for Resource Scheduling Agents

Event	Event Type	Reactive Scheduling Activities
Appointment Start Time Alarm Fired for Load (Unload) Appointment	Alarm Event	This alarm indicates that the scheduled start time of the specified load (unload) appointment has arrived. The resource appointment scheduler will make the appointment active if it is not active. It will also create an appointment end time alarm if needed. The resource appointment scheduler will inform the processing agent to start processing the appointment.
Appointment Start Time Alarm Fired for Discharge Appointment	Alarm Event	This alarm indicates that the scheduled start time of the specified discharge appointment has arrived. The resource appointment scheduler will make the appointment active if it is not active. It

Petitioner STMICROELECTRONICS, INC.,
Ex. 1006, IPR2022-00681, Pg. 42

Event	Event Type	Reactive Scheduling Activities
		will also create an appointment end time alarm if needed. The resource appointment scheduler will inform the processing agent to start processing the appointment.
Appointment End Time Alarm Fired for Load (Unload) Appointment	Alarm Event	This alarm indicates that the scheduled end time of the specified load (unload) appointment has arrived. The resource appointment scheduler will expand the appointment with a percentage (*e.g.*, 25%) of the originally scheduled duration until a maximum expansion percentage has been reached (*e.g.*, 175%). Before expanding the appointment, the subsequent booked appointments may be shifted later in time. A new end time alarm is then set for the expanded load (unload) appointment.
Appointment End Time Alarm Fired for Charge Appointment	Alarm Event	This alarm indicates that the scheduled end time of the specified charge appointment has arrived. The resource appointment scheduler will expand the appointment with a percentage (*i.e.*, 25%) of the originally scheduled duration until a maximum expansion percentage has been reached (*i.e.*, 175%). Before expanding the appointment, the subsequent booked appointments may be shifted later in time. A new end time alarm is then set for the expanded charge appointment.
Machine Batch Appointment Changes Its Status to Active	Appointment State Change	The MSA initiates this change when the start time for the corresponding machine batch appointment has arrived. The RSA will change the corresponding appointment status of the current charge appointment to active, and a new end time alarm is set for the activated charge appointment.
Machine Batch Appointment Changes Its State to Processing	Appointment State Change	The MSA initiates this change when the machine batch appointment was actually started. The charge appointment will still have the active status.
Machine Batch Appointment Changes Its State to Completed	Appointment State Change	The MSA initiates this change when the processing of the corresponding machine batch appointment was actually completed. The RSA will change the appointment state of the corresponding discharge appointment to the completed status.
Lot Load (Unload) Appointment Shifted to Later Time	Appointment State Change	The LSA initiates this change when a lot load appointment was shifted to a later time. The RSA will rearrange its corresponding load appointments, and shift other appointments on its calendar if necessary. If the appointment has a start time alarm, the alarm update will be performed.

Petitioner STMICROELECTRONICS, INC.,
Ex. 1006, IPR2022-00681, Pg. 43

Event	Event Type	Reactive Scheduling Activities
Machine Batch Appointment Shifted Right to Later Time	Appointment State Change	The MSA initiates this change or responding the change from the lot scheduling calendar when a machine batch appointment was shifted to later time. The RSA will shift the corresponding charge and discharge appointment to later time. Other appointments on its calendar may also get shifted.
Machine Batch Appointment Shrunk	Appointment State Change	The MSA initiates this change when a machine batch appointment was shrunk. If the discharge appointment is not activated, the RSA will shift the corresponding discharge appointment to earlier time, otherwise it will shrink the discharge appointment. The start time alarm or end time alarm for the discharge appointment may need to be updated.
Machine Batch Appointment Expanded	Appointment State Change	The MSA initiates this change when a machine batch appointment was expanded. If the discharge appointment is not activated, the RSA will shift the corresponding discharge appointment to later time, other wise it will expand the discharge appointment. The start time alarm or end time alarm for the discharge appointment may need to be updated.
Load Start	Factory State Change (EI)	The equipment interface ("EI") notifies the RSA that a load has started. The RSA reacts depending on whether the lots that were loaded were expected or unexpected. If all the lot are expected, but loading order is different from the appointments on the calendar, the RSA will rearrange its load appointment and their participants.
Carrier Arrived	Factory State Change	The EI notifies the RSA that a carrier has arrived. If it carries the expected lot, the RSA will change the corresponding resource load lot appointment state to the ready status.
Load Update	Factory State Change	Upon notification by the EI, if the corresponding load appointment is not the first one in the batch job, the RSA will first shrink the previous load appointment, and pull the follow-up load appointment to earlier start time, the appointment state of the previous load appointment will be changed to the completed status. The end time alarm for the previous load appointment will be cancelled. The PMSA will change the next load appointments status to active.
Load Completed	Factory State Change	Upon notification by the EI that a load has completed, the RSA will shrink the corresponding load appointment, cancel the end time alarm and

Petitioner STMICROELECTRONICS, INC.,
Ex. 1006, IPR2022-00681, Pg. 44

Event	Event Type	Reactive Scheduling Activities
		change the appointment state of the last load appointment to the completed status.
Charge Started	EI Event	Upon notification from the EI that charging has started, the RSA will change the charge appointment state to the processing status.
Charge Completed	EI Event	Upon notification from the EI that a charge is complete, the RSA will shrink the charge appointment, cancel the end time alarm, and change the charge appointment state to the completed status. If there are some follow-up unload appointments, it will pull the unload appointments to earlier start time, and start the unload appointment.
Discharge Started	EI Event	Upon notification from the EI that a discharge has started, the RSA will change the discharge appointment state to the processing status.
Unload Started	EI Event	Upon notification from the EI that unloading has started, the RSA will change the first unload appointment state to the processing status.
Unload Update	EI Event	Upon notification from the EI, an unload appointment is updated. If the corresponding unload appointment is not the last one in the unload start event, the RSA will shrink the corresponding unload appointment, cancel its end time alarm and change its status to the completed status. The RSA will then pull the next unload appointment to earlier time and start processing the next unload appointment. If the corresponding unload appointment is the last one in the unload start event, the RSA will wait for unload completed event.
Unload Completed	EI Event	Upon notification from the EI that an unload has completed, the RSA will shrink the unload appointment, cancel its end time alarm and change the appointment state to the completed status.
Unexpected Unload Started	EI Event	Upon notification from the EI that an unload has unexpectedly started (*i.e.*, the next appointment is not an unload appointment or the transfer sequence is different from the scheduled one) the RSA will change the scheduled unload appointments, and make the first one active. Overlapping appointment may get shifted to later time or cancelled.
Unexpected Load Started	EI Event	Upon notification from the EI that a load has unexpectedly started (*i.e.*, the next appointment is not a load appointment or the transfer sequence is different from the scheduled one), if there is a lot

Petitioner STMICROELECTRONICS, INC.,
Ex. 1006, IPR2022-00681, Pg. 45

Event	Event Type	Reactive Scheduling Activities
		in the list that is not one of the participant of the next charge appointment, the RSA passes a lot list and batch ID to a MSA for appropriate response. If all the lots are in the next charge appointment, but the transfer sequence is different from the schedule appointments, the RSA will reschedule the load appointments.

Note that, as booked appointments are shifted, canceled, shrunk, expanded, and rescheduled, the changes can ripple through the process flow and, in particular, the calendars. Changes are instituted by a single software agent, but a changed appointment may be booked on multiple calendars. The changes must consequently be communicated to the other software agents so they can update their calendars respectively. This is true also of other types of events in the process flow.

In the illustrated embodiment, the invention is implemented using **o**bject **o**riented **p**rogramming ("OOP") techniques, although the invention may be implemented using techniques that are not object oriented. The software agents 265 are implemented as objects and are intelligent, state aware, and are imbued with specific goals for which they autonomously initiate behaviors to achieve. Their behavior is relatively simple and is partially configurable through scripts and properties. The behavior is designed to achieve selected goals such as achieving an assigned lot due date, achieving a predefined level of quality, maximizing machine utilization, and scheduling opportunistic preventive maintenance. The helper class is a class of objects to which various objects that are software agents 265 delegate various responsibilities or that provide some useful service in the process flow 100. Publishers and listeners, mentioned above, are also helper class objects.

Thus, some portions of the detailed descriptions herein are presented in terms of a software implemented process involving symbolic representations of operations on data bits within a memory in a computing system or a computing device. These descriptions and representations are the means used by those in the art to most effectively convey the substance of their work to others skilled in the art. The process and operation require physical manipulations of physical quantities. Usually, though not necessarily, these quantities take the form of electrical, magnetic, or optical signals capable of being stored, transferred, combined, compared, and otherwise manipulated. It has proven convenient at

Petitioner STMICROELECTRONICS, INC.,
Ex. 1006, IPR2022-00681, Pg. 46

times, principally for reasons of common usage, to refer to these signals as bits, values, elements, symbols, characters, terms, numbers, or the like.

It should be borne in mind, however, that all of these and similar terms are to be associated with the appropriate physical quantities and are merely convenient labels applied to these quantifies. Unless specifically stated or otherwise as may be apparent, throughout the present disclosure, these descriptions refer to the action and processes of an electronic device, that manipulates and transforms data represented as physical (electronic, magnetic, or optical) quantities within some electronic device's storage into other data similarly represented as physical quantities within the storage, or in transmission or display devices. Exemplary of the terms denoting such a description are, without limitation, the terms "processing," "computing," "calculating," "determining," "displaying," and the like.

Note that the software implemented aspects of the invention are typically encoded on some form of program storage medium or implemented over some type of transmission medium. The program storage medium may be magnetic (*e.g.*, a floppy disk or a hard drive) or optical (*e.g.*, a **c**ompact **d**isk **r**ead **o**nly **m**emory, or "CD ROM"), and may be read only or random access. Similarly, the transmission medium may be twisted wire pairs, coaxial cable, optical fiber, or some other suitable transmission medium known to the art. The invention is not limited by these aspects of any given implementation.

This concludes the detailed description. The particular embodiments disclosed above are illustrative only, as the invention may be modified and practiced in different but equivalent manners apparent to those skilled in the art having the benefit of the teachings herein. Note that further variations not discussed may be employed in still other embodiments. Furthermore, no limitations are intended to the details of construction or design herein shown, other than as described in the claims below. It is therefore evident that the particular embodiments disclosed above may be altered or modified and all such variations are considered within the scope and spirit of the invention. Accordingly, the protection sought herein is as set forth in the claims below.

Petitioner STMICROELECTRONICS, INC.,
Ex. 1006, IPR2022-00681, Pg. 47

CLAIMS

WHAT IS CLAIMED:

1. A method for scheduling in an automated manufacturing environment, comprising:

detecting an occurrence of a predetermined event in a process flow;

notifying a software scheduling agent of the occurrence; and

reactively scheduling an action from the software scheduling agent responsive to the detection of the predetermined event.

2. The method of claim 1, wherein detecting the occurrence of the predetermined event includes detecting an unplanned event or an unexpected event.

3. The method of claim 1, wherein detecting the occurrence of the predetermined event includes detecting an occurrence of one of an appointment state change, a factory state change, and an alarm event.

4. The method of claim 3, wherein detecting the appointment state change includes detecting at least one of an appointment cancellation, an appointment expansion, an appointment shrinking, an appointment abort, an appointment changing status, an appointment shift, an appointment override, an transport time update, a load time update, an unload time update, a lot joining a batch, a lot leaving a batch, canceling a lot from a batch, and a commitment window update.

5. The method of claim 3, wherein detecting the factory state change includes detecting at least one of detection of a downtime occurrence; a machine becoming available; a PM/Qual being detected; a chamber going down; a chamber becoming available, a change in machine capabilities; a change in machine types; an addition of a process; an addition of a process operation; a lot arriving at a machine; a lot process changed, a lot placed on hold, a lot released from hold, a lot priority changed, a lot due date changed, a lot wafer count changed, a lot process operation changed, and a lot departing a machine.

6. The method of claim 3, wherein detecting the alarm event includes detecting at least one of an alarm firing for an appointment start time and an alarm firing for an appointment end time.

Petitioner STMICROELECTRONICS, INC.,
Ex. 1006, IPR2022-00681, Pg. 48

7. The method of claim 1, wherein detecting the predetermined event includes detecting at least one of an appointment cancellation, an appointment expansion, an appointment shrinking, an appointment abort, an appointment becoming active, an appointment nearing completion, an appointment completing, an appointment shift, an appointment override, and a commitment window update, detection of a downtime occurrence; a machine becoming available; a PM/Qual being detected; a chamber going down; a chamber becoming available, a change in machine capabilities; a change in machine types; an addition of a process; an addition of a process operation; a lot arriving at a machine; a lot process changed, a lot placed on hold, a lot released from hold, a lot priority changed, a lot due date changed, a lot wafer count changed, a lot process operation changed, a lot departing a machine, an alarm firing for an appointment start time and an alarm firing for an appointment end time.

8. The method of claim 1, wherein notifying the software scheduling agent of the occurrence includes:

sending an indication of the occurrence to a publisher;

publishing the occurrence from the publisher to a subscribing listener; and

calling the software scheduling agent from the subscribing listener.

9. The method of claim 1, wherein reactively scheduling the action includes at least one of aborting a scheduled appointment in progress; canceling a scheduled appointment before it begins; scheduling a new appointment; starting a scheduled appointment; expanding the duration of a scheduled appointment; shrinking the duration of a scheduled appointment; shifting a scheduled appointment; adding new processing capabilities; deleting old processing capabilities; setting an alarm; canceling an alarm; and changing the status of an appointment.

10. The method of claim 1, further comprising proactively scheduling an appointment with which the predetermined event is associated.

11. The method of claim 10, wherein proactively scheduling the appointment includes proactively scheduling the appointment from the software scheduling agent.

Petitioner STMICROELECTRONICS, INC.,
Ex. 1006, IPR2022-00681, Pg. 49

12. A computer-readable, program storage medium encoded with instructions that, when executed by a computer, perform a method for scheduling in an automated manufacturing environment, the method comprising:

detecting an occurrence of a predetermined event in a process flow;

notifying a software scheduling agent of the occurrence; and

reactively scheduling an action from the software scheduling agent responsive to the detection of the predetermined event.

13. The program storage medium of claim 12, wherein detecting the occurrence of the predetermined event in the encoded method includes detecting an unplanned event or an unexpected event.

14. The program storage medium of claim 12, wherein detecting the occurrence of the predetermined event in the encoded method includes detecting an occurrence of one of an appointment state change, a factory state change, and an alarm event.

15. The program storage medium of claim 12, wherein detecting the predetermined event in the encoded method includes detecting at least one of an appointment cancellation, an appointment expansion, an appointment shrinking, an appointment abort, an appointment changing status, an appointment shift, an appointment override, an transport time update, a load time update, an unload time update, a lot joining a batch, a lot leaving a batch, canceling a lot from a batch, a commitment window update, detection of a downtime occurrence; a machine becoming available; a PM/Qual being detected; a chamber going down; a chamber becoming available, a change in machine capabilities; a change in machine types; an addition of a process; an addition of a process operation; a lot arriving at a machine; a lot process changed, a lot placed on hold, a lot released from hold, a lot priority changed, a lot due date changed, a lot wafer count changed, a lot process operation changed, a lot departing a machine, an alarm firing for an appointment start time and an alarm firing for an appointment end time.

16. The program storage medium of claim 12, wherein notifying the software scheduling agent of the occurrence in the encoded method includes:

sending an indication of the occurrence to a publisher;

publishing the occurrence from the publisher to a subscribing listener; and

Petitioner STMICROELECTRONICS, INC.,
Ex. 1006, IPR2022-00681, Pg. 50

calling the software scheduling agent from the subscribing listener.

17. The program storage medium of claim 12, wherein reactively scheduling the action in the encoded method includes at least one of aborting a scheduled appointment in progress; canceling a scheduled appointment before it begins; scheduling a new appointment; starting a scheduled appointment; expanding the duration of a scheduled appointment; shrinking the duration of a scheduled appointment; shifting a scheduled appointment; adding new processing capabilities; deleting old processing capabilities; setting an alarm; canceling an alarm; and changing the status of an appointment.

18. The program storage medium of claim 12, wherein the encoded method further comprises proactively scheduling an appointment with which the predetermined event is associated.

19. A computing system programmed to perform a method for scheduling in an automated manufacturing environment, the method comprising:

detecting an occurrence of a predetermined event in a process flow;

notifying a software scheduling agent of the occurrence; and

reactively scheduling an action from the software scheduling agent responsive to the detection of the predetermined event.

20. The computing system of claim 19, wherein detecting the occurrence of the predetermined event in the programmed method includes detecting an unplanned event or an unexpected event.

21. The computing system of claim 19, wherein detecting the occurrence of the predetermined event in the programmed method includes detecting an occurrence of one of an appointment state change, a factory state change, and an alarm event.

22. The computing system of claim 19, wherein detecting the predetermined event in the programmed method includes detecting at least one of an appointment cancellation, an appointment expansion, an appointment shrinking, an appointment abort, an appointment changing status, an appointment shift, an appointment override, an transport time update, a load time update, an unload time update, a lot joining a batch, a lot leaving a batch, canceling a lot from a batch, a commitment window update, detection of a downtime occurrence; a

Petitioner STMICROELECTRONICS, INC.,
Ex. 1006, IPR2022-00681, Pg. 51

machine becoming available; a PM/Qual being detected; a chamber going down; a chamber becoming available, a change in machine capabilities; a change in machine types; an addition of a process; an addition of a process operation; a lot arriving at a machine; a lot process changed, a lot placed on hold, a lot released from hold, a lot priority changed, a lot due date changed, a lot wafer count changed, a lot process operation changed, a lot departing a machine, an alarm firing for an appointment start time and an alarm firing for an appointment end time.

23. The computing system of claim 19, wherein notifying the software scheduling agent of the occurrence in the programmed method includes:

sending an indication of the occurrence to a publisher;

publishing the occurrence from the publisher to a subscribing listener; and

calling the software scheduling agent from the subscribing listener.

24. The computing system of claim 19, wherein reactively scheduling the action in the programmed method includes at least one of aborting a scheduled appointment in progress; canceling a scheduled appointment before it begins; scheduling a new appointment; starting a scheduled appointment; expanding the duration of a scheduled appointment; shrinking the duration of a scheduled appointment; shifting a scheduled appointment; adding new processing capabilities; deleting old processing capabilities; setting an alarm; canceling an alarm; and changing the status of an appointment.

25. The computing system of claim 19, wherein the encoded method further comprises proactively scheduling an appointment with which the predetermined event is associated.

26. An apparatus for scheduling in an automated manufacturing environment, the apparatus comprising:

means for detecting an occurrence of a predetermined event in a process flow;

means for notifying a software scheduling agent of the occurrence; and

means for reactively scheduling an action from the software scheduling agent responsive to the detection of the predetermined event.

Petitioner STMICROELECTRONICS, INC.,
Ex. 1006, IPR2022-00681, Pg. 52

27. The method of claim 26, wherein the means for detecting the occurrence of the predetermined event includes means for detecting an unplanned event or an unexpected event.

28. The method of claim 26, wherein the means for detecting the occurrence of the predetermined event includes means for detecting an occurrence of one of an appointment state change, a factory state change, and an alarm event.

29. The method of claim 26, wherein the means for detecting the predetermined event includes means for detecting at least one of an appointment cancellation, an appointment expansion, an appointment shrinking, an appointment abort, an appointment changing status, an appointment shift, an appointment override, an transport time update, a load time update, an unload time update, a lot joining a batch, a lot leaving a batch, canceling a lot from a batch, a commitment window update, detection of a downtime occurrence; a machine becoming available; a PM/Qual being detected; a chamber going down; a chamber becoming available, a change in machine capabilities; a change in machine types; an addition of a process; an addition of a process operation; a lot arriving at a machine; a lot process changed, a lot placed on hold, a lot released from hold, a lot priority changed, a lot due date changed, a lot wafer count changed, a lot process operation changed, a lot departing a machine, an alarm firing for an appointment start time and an alarm firing for an appointment end time.

30. The method of claim 26, wherein the means for notifying the software scheduling agent of the occurrence includes:

means for sending an indication of the occurrence to a publisher;

means for publishing the occurrence from the publisher to a subscribing listener; and

means for calling the software scheduling agent from the subscribing listener.

31. The method of claim 26, wherein the means for reactively scheduling the action includes means for at least one of aborting a scheduled appointment in progress; canceling a scheduled appointment before it begins; scheduling a new appointment; starting a scheduled appointment; expanding the duration of a scheduled appointment; shrinking the duration of a scheduled appointment; shifting a scheduled appointment; adding new

Petitioner STMICROELECTRONICS, INC.,
Ex. 1006, IPR2022-00681, Pg. 53

processing capabilities; deleting old processing capabilities; setting an alarm; canceling an alarm; and changing the status of an appointment.

32. The method of claim 26, further comprising means for proactively scheduling an appointment with which the predetermined event is associated.

33. An automated manufacturing environment, comprising:

a process flow; and

a computing system, including a plurality of software scheduling agents residing thereon, the software scheduling agents being capable of reactively scheduling appointments for activities in the process flow responsive to a plurality of predetermined events.

34. The automated manufacturing environment of claim 33, further comprising a plurality of publishers and subscribers capable of detecting an occurrence of one of the predetermined events in the process flow and notifying one of the software scheduling agent of the occurrence.

35. The automated manufacturing environment of claim 34, wherein detecting the occurrence of the predetermined event includes detecting an unplanned event or an unexpected event.

36. The automated manufacturing environment of claim 34, wherein detecting the occurrence of the predetermined event includes detecting an occurrence of one of an appointment state change, a factory state change, and an alarm event.

37. The automated manufacturing environment of claim 34, wherein detecting the predetermined event includes detecting at least one of an appointment cancellation, an appointment expansion, an appointment shrinking, an appointment abort, an appointment changing status, an appointment shift, an appointment override, an transport time update, a load time update, an unload time update, a lot joining a batch, a lot leaving a batch, canceling a lot from a batch, a commitment window update, detection of a downtime occurrence; a machine becoming available; a PM/Qual being detected; a chamber going down; a chamber becoming available, a change in machine capabilities; a change in machine types; an addition of a process; an addition of a process operation; a lot arriving at a machine; a lot process

Petitioner STMICROELECTRONICS, INC.,
Ex. 1006, IPR2022-00681, Pg. 54

changed, a lot placed on hold, a lot released from hold, a lot priority changed, a lot due date changed, a lot wafer count changed, a lot process operation changed, and a lot departing a machine, an alarm firing for an appointment start time and an alarm firing for an appointment end time.

38. The automated manufacturing environment of claim 34, wherein notifying the software scheduling agent of the occurrence includes:

sending an indication of the occurrence to a publisher;

publishing the occurrence from the publisher to a subscribing listener; and

calling the software scheduling agent from the subscribing listener.

39. The automated manufacturing environment of claim 34, wherein reactively scheduling the action includes at least one of aborting a scheduled appointment in progress; canceling a scheduled appointment before it begins; scheduling a new appointment; starting a scheduled appointment; expanding the duration of a scheduled appointment; shrinking the duration of a scheduled appointment; shifting a scheduled appointment; adding new processing capabilities; deleting old processing capabilities; setting an alarm; canceling an alarm; and changing the status of an appointment.

40. The automated manufacturing environment of claim 34, further comprising proactively scheduling an appointment with which the predetermined event is associated.

41. The automated manufacturing environment of claim 33, further comprising at least one of a manufacturing execution system and an automated materials handling system.

42. The automated manufacturing environment of claim 33, wherein the computing system is at least one of a local area network, a wide area network, a system area network, an intranet, or a portion of the Internet.

43. The automated manufacturing environment of claim 33, wherein the process flow comprises a portion of a semiconductor manufacturing facility.

44. An automated manufacturing environment, comprising:

a plurality of work pieces;

a plurality of processing stations through which the work pieces may be processed;

Petitioner STMICROELECTRONICS, INC.,
Ex. 1006, IPR2022-00681, Pg. 55

a plurality of software scheduling agents capable of scheduling appointments for processing the work pieces through the process stations, the software scheduling agents capable of reactively scheduling responsive to predetermined events.

45. The automated manufacturing environment of claim 44, further comprising a plurality of publishers and subscribers capable of detecting an occurrence of one of the predetermined events in the process flow and notifying one of the software scheduling agent of the occurrence.

46. The automated manufacturing environment of claim 45, wherein detecting the occurrence of the predetermined event includes detecting an unplanned event or an unexpected event.

47. The automated manufacturing environment of claim 45, wherein detecting the occurrence of the predetermined event includes detecting an occurrence of one of an appointment state change, a factory state change, and an alarm event.

48. The automated manufacturing environment of claim 45, wherein detecting the predetermined event includes detecting at least one of an appointment cancellation, an appointment expansion, an appointment shrinking, an appointment abort, an appointment changing status, an appointment shift, an appointment override, an transport time update, a load time update, an unload time update, a lot joining a batch, a lot leaving a batch, canceling a lot from a batch, a commitment window update, detection of a downtime occurrence; a machine becoming available; a PM/Qual being detected; a chamber going down; a chamber becoming available, a change in machine capabilities; a change in machine types; an addition of a process; an addition of a process operation; a lot arriving at a machine; a lot process changed, a lot placed on hold, a lot released from hold, a lot priority changed, a lot due date changed, a lot wafer count changed, a lot process operation changed, a lot departing a machine, an alarm firing for an appointment start time and an alarm firing for an appointment end time.

49. The automated manufacturing environment of claim 45, wherein notifying the software scheduling agent of the occurrence includes:

sending an indication of the occurrence to a publisher;

Petitioner STMICROELECTRONICS, INC.,
Ex. 1006, IPR2022-00681, Pg. 56

publishing the occurrence from the publisher to a subscribing listener; and

calling the software scheduling agent from the subscribing listener.

50. The automated manufacturing environment of claim 45, wherein reactively scheduling the action includes at least one of aborting a scheduled appointment in progress; canceling a scheduled appointment before it begins; scheduling a new appointment; starting a scheduled appointment; expanding the duration of a scheduled appointment; shrinking the duration of a scheduled appointment; shifting a scheduled appointment; adding new processing capabilities; deleting old processing capabilities; setting an alarm; canceling an alarm; and changing the status of an appointment.

51. The automated manufacturing environment of claim 45, further comprising proactively scheduling an appointment with which the predetermined event is associated.

52. The automated manufacturing environment of claim 44, further comprising at least one of a manufacturing execution system and an automated materials handling system.

53. The automated manufacturing environment of claim 44, wherein the computing system is at least one of a local area network, a wide area network, a system area network, an intranet, or a portion of the Internet.

Petitioner STMICROELECTRONICS, INC.,
Ex. 1006, IPR2022-00681, Pg. 57

ABSTRACT OF THE DISCLOSURE

A method and apparatus for scheduling in an automated manufacturing environment, comprising are disclosed. The method includes detecting an occurrence of a predetermined event in a process flow; notifying a software scheduling agent of the occurrence; and reactively scheduling an action from the software scheduling agent responsive to the detection of the predetermined event. The apparatus is automated manufacturing environment including a process flow and a computing system. The computing system further includes a plurality of software scheduling agents residing thereon, the software scheduling agents being capable of reactively scheduling appointments for activities in the process flow responsive to a plurality of predetermined events.

Petitioner STMICROELECTRONICS, INC.,
Ex. 1006, IPR2022-00681, Pg. 58

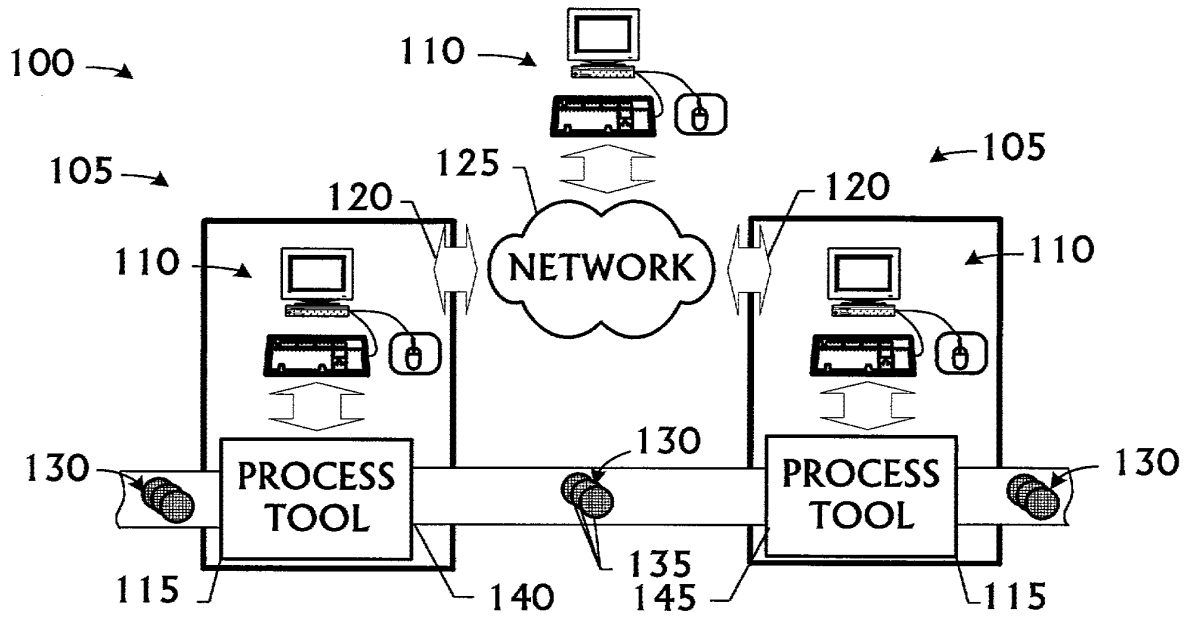
100
110
105
125
105
120
120
NETWORK
110
110
130
PROCESS TOOL
130
PROCESS TOOL
130
135
115
140
145
115

FIG. 1

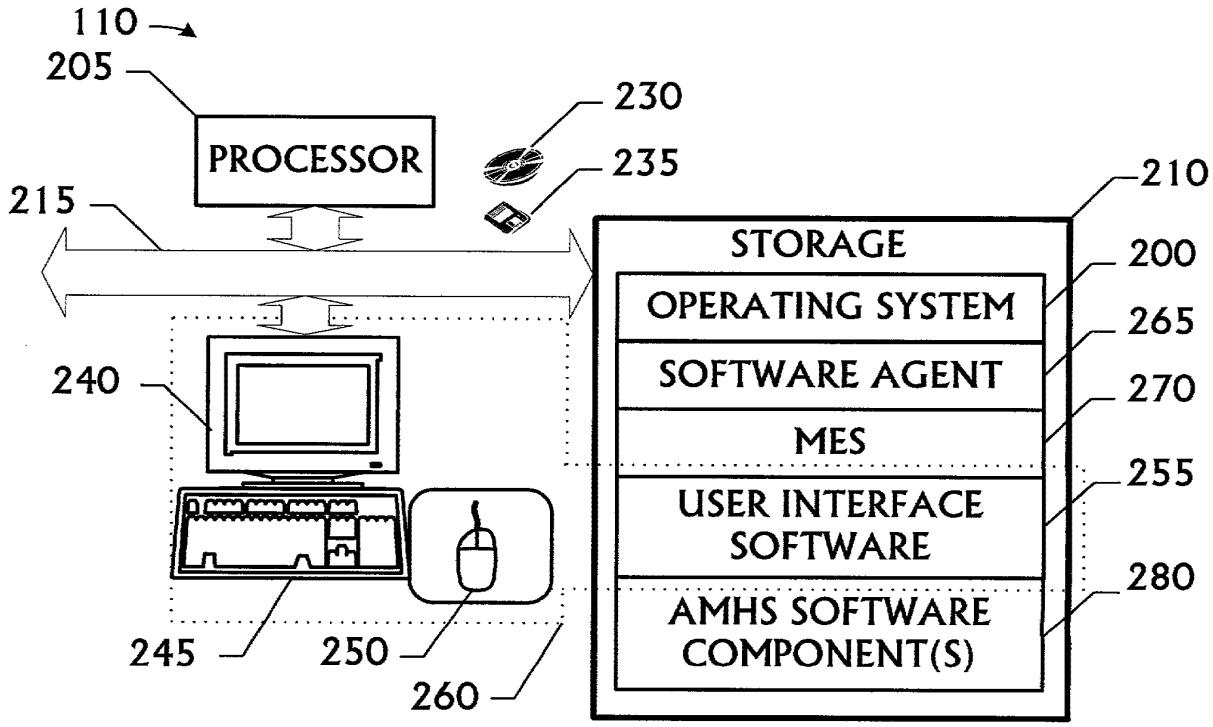
110
205
230
PROCESSOR
235
210
215
STORAGE
200
OPERATING SYSTEM
265
SOFTWARE AGENT
270
240
MES
255
USER INTERFACE SOFTWARE
280
AMHS SOFTWARE COMPONENT(S)
245
250
260

FIG. 2

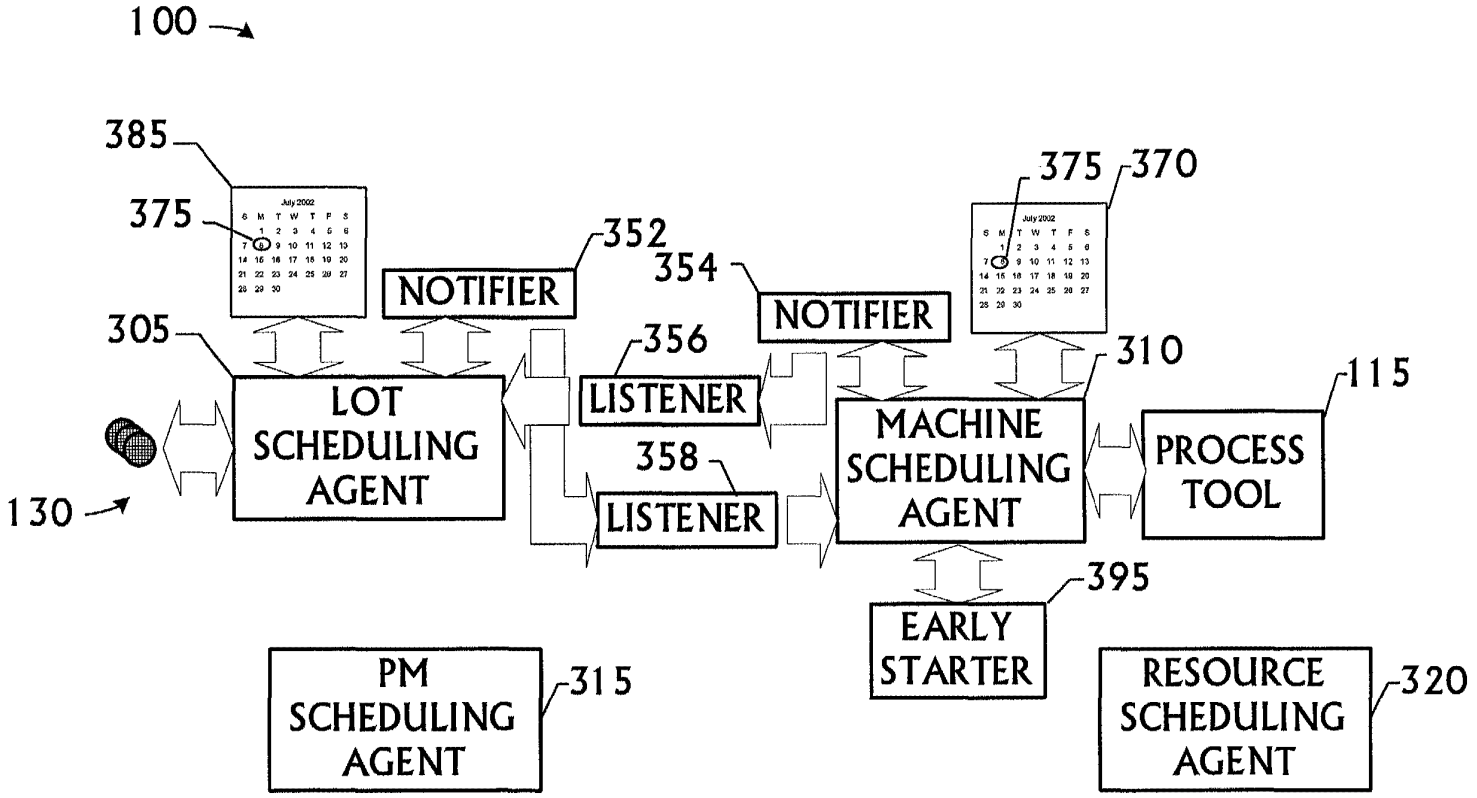
100
385
375
352
NOTIFIER
354
NOTIFIER
375
370
305
356
LISTENER
310
115
LOT SCHEDULING AGENT
MACHINE SCHEDULING AGENT
PROCESS TOOL
130
358
LISTENER
395
EARLY STARTER
PM SCHEDULING AGENT
315
RESOURCE SCHEDULING AGENT
320

FIG. 3

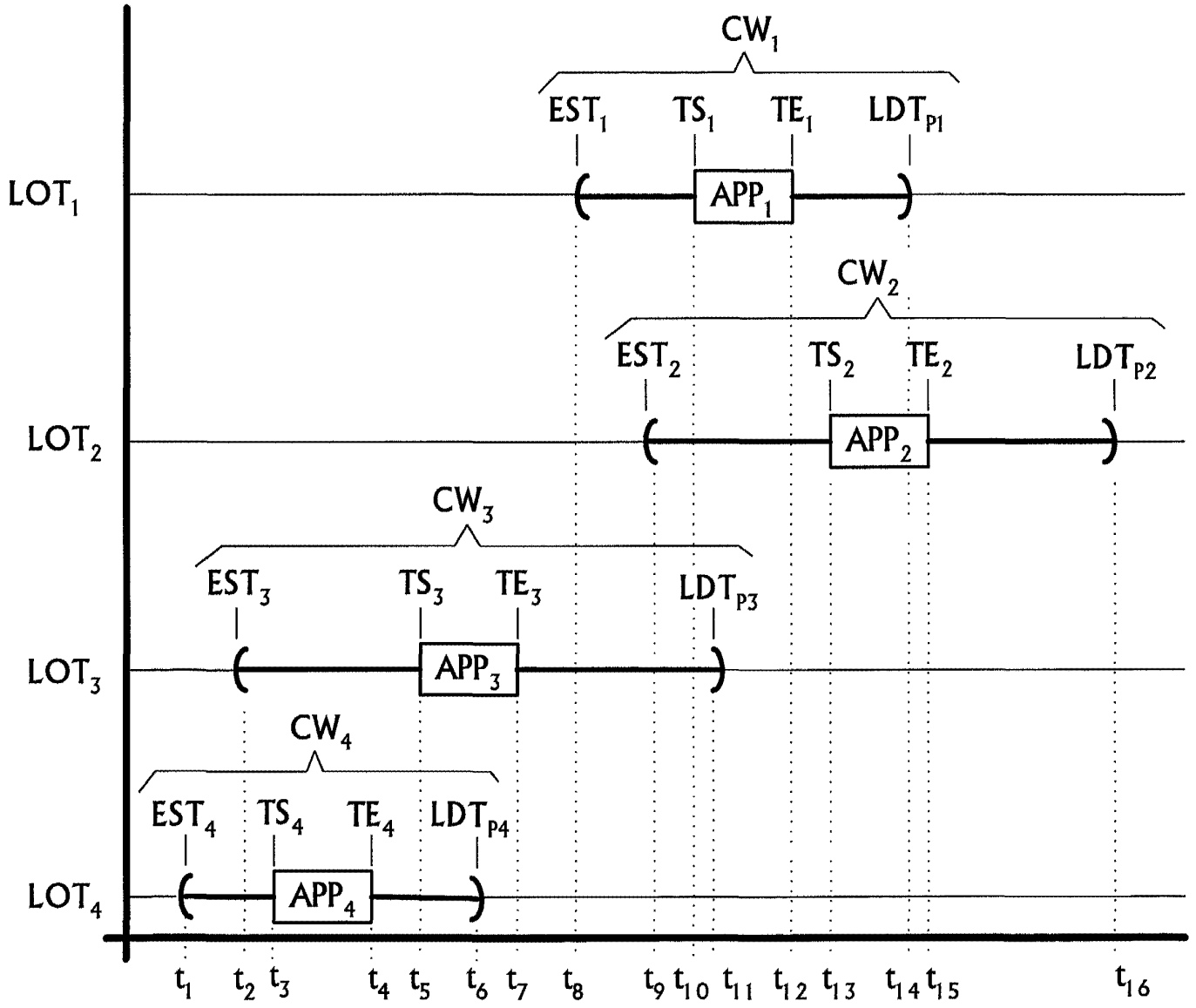
CW1
EST1
TS1
TE1
LDTP1
LOT1
APP1
CW2
EST2
TS2
TE2
LDTP2
LOT2
APP2
CW3
EST3
TS3
TE3
LDTP3
LOT3
APP3
CW4
EST4
TS4
TE4
LDTP4
LOT4
APP4
t1 t2 t3 t4 t5 t6 t7 t8 t9 t10 t11 t12 t13 t14 t15 t16

FIG. 4

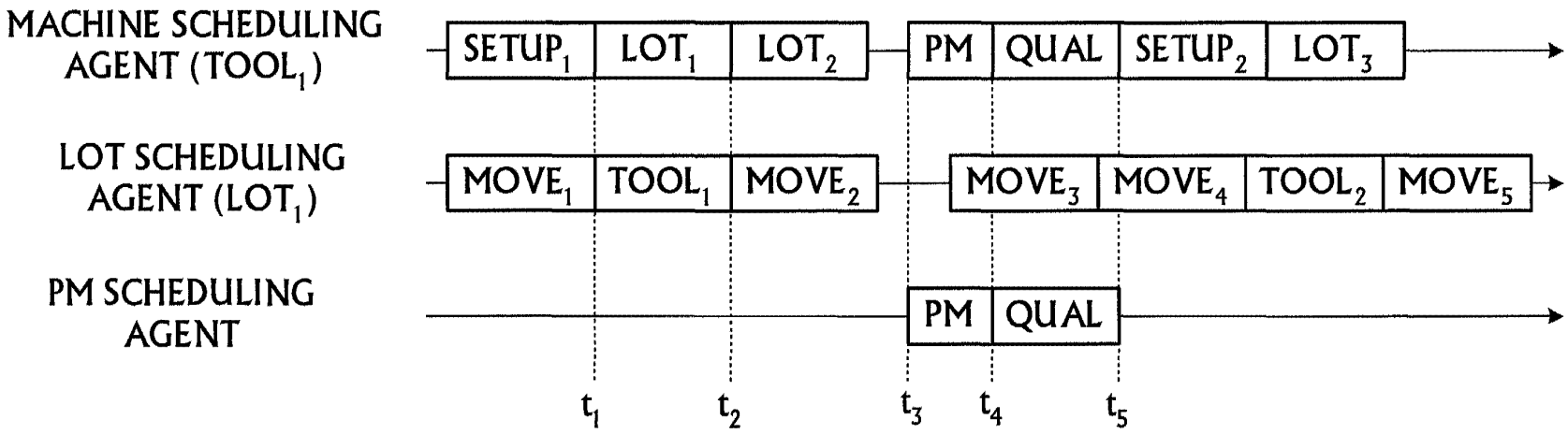

FIG. 5

Petitioner STMICROELECTRONICS, INC.,
Ex. 1006, IPR2022-00681, Pg. 62

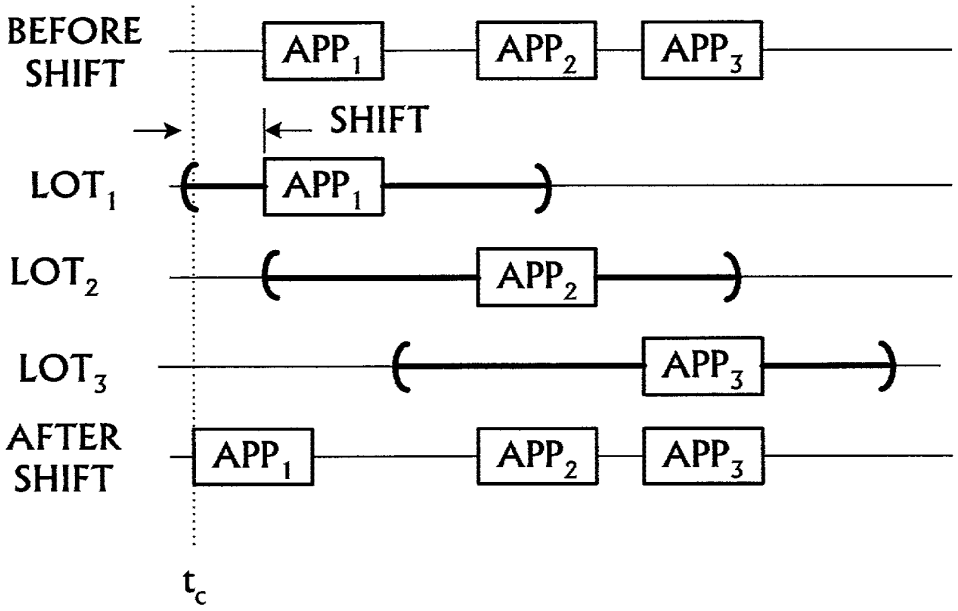
BEFORE SHIFT
APP1
APP2
APP3
SHIFT
LOT1
APP1
LOT2
APP2
LOT3
APP3
AFTER SHIFT
APP1
APP2
APP3
tc

FIG. 6A

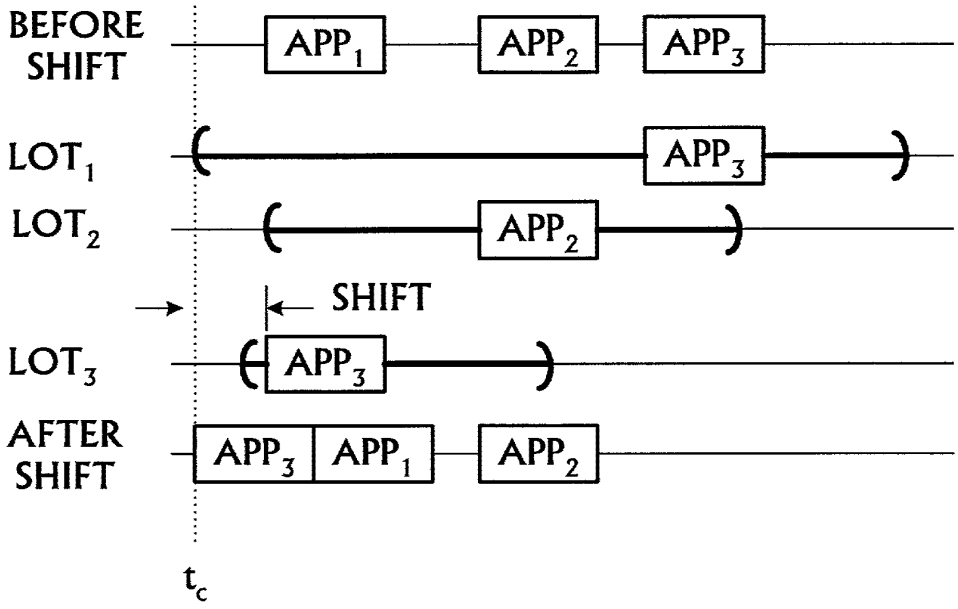
BEFORE SHIFT
APP1
APP2
APP3
LOT1
APP3
LOT2
APP2
SHIFT
LOT3
APP3
AFTER SHIFT
APP3
APP1
APP2
tc

FIG. 6B

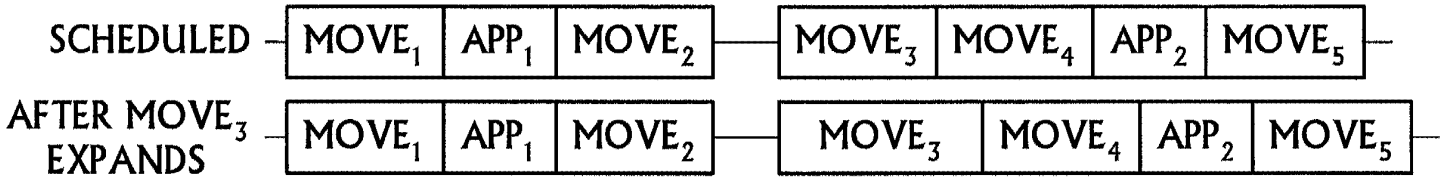

FIG. 7A

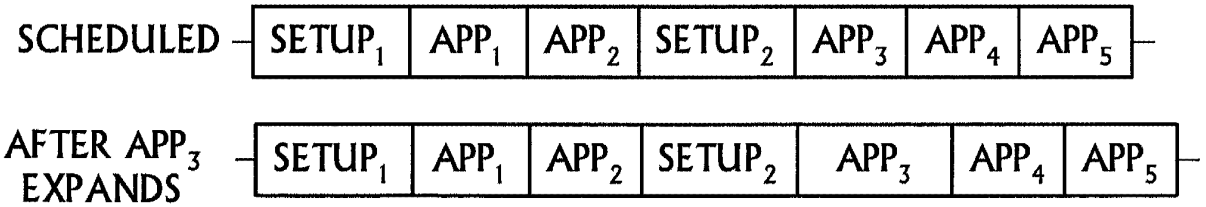

FIG. 7B

Petitioner STMICROELECTRONICS, INC.,
Ex. 1006, IPR2022-00681, Pg. 64

PATENT
2000.079600/JAP
TT4739

DECLARATION

As a below named inventor, I hereby declare that:

My residence, post office address and citizenship are as stated below next to my name.

I believe I am the original, first and sole inventor (if only one name is listed below) or the below named inventors are the original, first and joint inventors (if plural names are listed below) of the subject matter which is claimed and for which a patent is sought on the invention entitled **AGENT REACTIVE SCHEDULING IN AN AUTOMATED MANUFACTURING ENVIRONMENT**, the Specification of which is attached hereto.

I hereby state that I have reviewed and understand the contents of the above-identified specification, including the claims.

I acknowledge the duty to disclose to the Patent and Trademark Office all information known to me to be material to patentability of the subject matter claimed in this application, as "materiality" is defined in Title 37, Code of Federal Regulations, § 1.56.

I hereby claim priority benefits under Title 35, United States Code, § 119 and/or § 365 of any foreign application(s) for patent or inventor's certificate, PCT international application(s), and United States provisional application(s), listed below and have also identified below any foreign application for patent or inventor's certificate, PCT international application, or United States provisional application, having a filing date before that of the application on which priority is claimed:

PRIORITY APPLICATION(S)			**Priority Claimed**
(Number)	(Country)	(Date Filed)	Yes/No
(Number)	(Country)	(Date Filed)	Yes/No

I hereby claim the benefit under Title 35, United States Code, § 120 and/or § 365 of any United States application(s) and PCT international application(s) listed below and, insofar as the subject matter of each of the claims of this application is not disclosed in the prior United States or PCT international application in the manner provided by the first paragraph of Title 35, United States Code, § 112, I acknowledge the duty to disclose all information known to me to be material to patentability of the subject matter claimed in this application, as "materiality" is defined in Title 37, Code of Federal Regulations, § 1.56, which becomes available between the filing date of the prior application and the national or PCT international filing date of this application:

(Application Serial No.)	(Filing Date)	(Status)
(Application Serial No.)	(Filing Date)	(Status)

I hereby direct that all correspondence and telephone calls be addressed to Jeffrey A. Pyle, Williams, Morgan & Amerson, P.C., 7676 Hillmont, Suite 250, Houston, Texas 77040, (713) 934-4053.

I HEREBY DECLARE THAT ALL STATEMENTS MADE OF MY OWN KNOWLEDGE ARE TRUE AND THAT ALL STATEMENTS MADE ON INFORMATION AND BELIEF ARE BELIEVED TO BE TRUE; AND FURTHER THAT THESE STATEMENTS WERE MADE WITH THE KNOWLEDGE THAT WILLFUL FALSE STATEMENTS AND THE LIKE SO MADE ARE PUNISHABLE BY FINE OR IMPRISONMENT, OR BOTH, UNDER SECTION 1001 OF TITLE 18 OF THE UNITED STATES CODE AND THAT SUCH WILLFUL FALSE STATEMENTS MAY JEOPARDIZE THE VALIDITY OF THE APPLICATION OR ANY PATENT ISSUED THEREON.

Inventor's Full Name:	GUSTAVO		MATA
Inventor's Signature:	Gustavo Mata		
Country of Citizenship:	USA	Date:	4-24-02
Residence Address: (street, number, city, state, and/or country)	11520 Spicewood Parkway Austin, TX 78750		
Post Office Address: (if different from above)	same as above		

Inventor's Full Name:	STEVEN	C.	NETTLES
Inventor's Signature:	Steven C. Nettles		
Country of Citizenship:	USA	Date:	4/24/02
Residence Address: (street, number, city, state, and/or country)	812 Ranchview Drive Johnson City, TX 78636		
Post Office Address: (if different from above)	same as above		

Inventor's Full Name:	LARRY	D.	BARTO
Inventor's Signature:	Larry D Barto		
Country of Citizenship:	USA	Date:	4/24/02
Residence Address: (street, number, city, state, and/or country)	15 Sunset Trail Austin, TX 78745		
Post Office Address: (if different from above)	same as above		

Petitioner STMICROELECTRONICS, INC.,
Ex. 1006, IPR2022-00681, Pg. 66

Inventor's Full Name:	YIWEI		LI
Inventor's Signature:	Yi Li		
Country of Citizenship:	P.R.C.	Date:	4/24/02
Residence Address: (street, number, city, state, and/or country)	8721 Water Ash Way Austin TX 78750		
Post Office Address: (if different from above)	same as above		

Petitioner STMICROELECTRONICS, INC.,
Ex. 1006, IPR2022-00681, Pg. 67

IN THE UNITED STATES PATENT AND TRADEMARK OFFICE

In re Application of:	§	
	§	
GUSTAVO MATA	§	
STEVEN C. NETTLES	§	
LARRY D. BARTO	§	Examiner: Unknown
YIWEI LI	§	
	§	Group Art Unit: Unknown
Serial No.: Unknown	§	
	§	Attorney Docket: 2000.079600/TT4739
Filed: Concurrently Herewith	§	
	§	
For: AGENT REACTIVE SCHEDULING IN AN AUTOMATED MANUFACTURING ENVIRONMENT	§	

POWER OF ATTORNEY

Assistant Commissioner for Patents

Washington, D.C. 20231

Sir:

The undersigned, being the inventors named in the above-identified application, hereby revoke any previous Powers of Attorney and appoint:

> Elizabeth A. Apperley, Reg. No. 36,428; Bradley Botsch, Reg. No. 34,552; Michael Caywood, Reg. No. 37,797; Daniel R. Collopy, Reg. No. 33,667; Paul S. Drake, Reg. No. 33,491; Rajendra Jaipershad, Reg. No. 44,168; Diana Roberts, Reg. No. 36,654; Richard J. Roddy, Reg. No. 27,688; and Harry A. Wolin, Reg. No. 32,638, of ADVANCED MICRO DEVICES, INC.; and
>
> Danny L. Williams, Reg. No. 31,892; Terry D. Morgan, Reg. No. 31,181; J. Mike Amerson, Reg. No. 35,426; Kenneth D. Goodman, Reg. No. 30,460; Jeffrey A. Pyle, Reg. No. 34,904; Jaison C. John, Reg. No. 50,737; Ruben S. Bains, Reg. No. 46,532; Steven Koon Hon Wong, Reg. No. 48,459; Scott F. Diring, Reg. No. 35,119; George J. Oehling, Reg. No. 40,471; Shelley P.M. Fussey, Reg. No. 39,458; Mark D. Moore, Reg. No. 42,903; Louis H. Iselin, Reg. No. 42,684; Raymund F. Eich, Reg. No. 42,508; Daren C. Davis, Reg. No. 38,425; and Stephanie A. Wardwell, Reg. No. 48,025, of WILLIAMS, MORGAN & AMERSON, P.C.,

as its attorney or agent so long as they remain with such firms, with full power of substitution and revocation, to prosecute the application, to make alterations and amendments therein, to transact all business in the Patent and Trademark Office in connection therewith, and to receive any Letters Patent, and for one year after issuance of such Letters Patent to file any request for a certificate of correction that may be deemed appropriate.

Please direct all communications as follows:

Jeffrey A. Pyle
WILLIAMS, MORGAN & AMERSON, P.C.
7676 Hillmont, Suite 250
Houston, Texas 77040
(713) 934-4053

Signature: Gustavo Mata Date: 4-24-02
Gustavo Mata

Signature: Steven C. Nettles Date: 4/24/02
Steven C. Nettles

Signature: Larry D. Barto Date: 4/24/02
Larry D. Barto

Signature: Yiwei Li Date: 4/24/02
Yiwei Li

Petitioner STMICROELECTRONICS, INC.,
Ex. 1006, IPR2022-00681, Pg. 69

N

U.S. UTILITY Patent Application

PATENT NUMBER and ISSUE DATE

APPL NUM	FILING DATE	CLASS	SUBCLASS	GAU	EXAMINER
10135145	04/30/2002	~~340~~ 700	99	~~2632~~ 2125	~~FRASIC~~ Gandhi

**APPLICANTS: Mata Gustavo; Nettles Steven; Barto Larry; Li Yiwei;

**CONTINUING DATA VERIFIED: JWL

** FOREIGN APPLICATIONS VERIFIED: JWL

PG-PUB	DO NOT PUBLISH ☐	RESCIND ☐

Foreign priority claimed	☐ yes ☐ no	ATTORNEY DOCKET NO
35 USC 119 conditions met	☐ yes ☐ no	2000.079600
Verified and Acknowledged Examiners's intials		

TITLE : Agent reactive scheduling in an automated manufacturing environment

U.S.DEPT. OF COMM./PAT.& TM-PTO-436L(Rev. 12-94)

NOTICE OF ALLOWANCE MAILED	Assistant Examiner	CLAIMS ALLOWED	
		Total Claims	Print Claim for O.G
ISSUE FEE		DRAWING		
Amount Due / Date Paid	Primary Examiner	Sheets Drwg. / Figs.Drwg. / Print Fig.	
☐ TERMINAL DISCLAMER	PREPARED FOR ISSUE	Application Examiner	

WARNING: The information disclosed herein may be restricted. Unauthorized disclosure may be prohibited by the United States Code Title 35, Sections 122, 181 and 368, Possession outside the U.S. Patent & Trademark Office is restricted to authorized employees and contractors only.

FILED WITH: ☐ DISK (CRF) ☐ CD-ROM (Attached in pocket on right inside flap)

JC41956

Best Available Copy

Best Available Copy

SEARCH

Class	Sub.	Date	Exmr.
700	99 100 121 101	8/18	JNG

SEARCH NOTES

(List databases searched. Attach search strategy inside.)

	Date	Exmr.
plus East	8/18	JNG

INTERFERENCE SEARCHED

Class	Sub.	Date	Exmr.

34

ISSUE SLIP STAPLE AREA (for additional cross-references)

ISSUING CLASSIFICATION			
ORIGINAL		CROSS REFERENCE(S)	
CLASS	SUBCLASS	CLASS	SUBCLASS (ONE SUBCLASS PER BLOCK)
INTERNATIONAL CLASSIFICATION			
/			
/			
/			
/			
/			^ Continued on Issue Slip Inside File Jacket

Best Available Copy

INDEX OF CLAIMS

✓ ..... Rejected - (Through numeral) ... Canceled N ..... Non-elected A ..... Appeal
= ..... Allowed + ... Restricted I ..... Interference O ..... Objected

Claim		Date		
Final	Original	6/13/03	1/15/04	6/14/04
	1	✓	✓	✓
	2			
	3			
	4			
	5			
	6			
	7			
	8			
	9			
	10			
	11			
	12			
	13			
	14			
	15			
	16			
	17			
	18			
	19			
	20			
	21			
	22			
	23			
	24			
	25			
	26			
	27			
	28			
	29			
	30			
	31			
	32			
	33			
	34			
	35			
	36			
	37			
	38			
	39			
	40			
	41			
	42			
	43			
	44			
	45			
	46			
	47			
	48			
	49			
	50			

Claim		Date		
Final	Original	6/13/03	1/15/04	6/14/04
	51	✓	✓	✓
	52			
	53	✓	✓	✓
	54			
	55			
	56			
	57			
	58			
	59			
	60			
	61			
	62			
	63			
	64			
	65			
	66			
	67			
	68			
	69			
	70			
	71			
	72			
	73			
	74			
	75			
	76			
	77			
	78			
	79			
	80			
	81			
	82			
	83			
	84			
	85			
	86			
	87			
	88			
	89			
	90			
	91			
	92			
	93			
	94			
	95			
	96			
	97			
	98			
	99			
	100			

Claim		Date
Final	Original	
	101	
	102	
	103	
	104	
	105	
	106	
	107	
	108	
	109	
	110	
	111	
	112	
	113	
	114	
	115	
	116	
	117	
	118	
	119	
	120	
	121	
	122	
	123	
	124	
	125	
	126	
	127	
	128	
	129	
	130	
	131	
	132	
	133	
	134	
	135	
	136	
	137	
	138	
	139	
	140	
	141	
	142	
	143	
	144	
	145	
	146	
	147	
	148	
	149	
	150	

If more than 150 claims or 9 actions staple additional sheet here

JC885 U.S. PTO
04/30/02

05-01-02

Jc971 U.S. PTO
10/135145
04/30/02

Danny L. Williams
Terry D. Morgan
J. Mike Amerson
Kenneth D. Goodman
Jeffrey A. Pyle
Jaison C. John
Ruben S. Bains
Steven K. Wong

Scott F. Diring*
George J. Oehling*
Shelley P.M. Fussey, Ph.D.*
Mark D. Moore, Ph.D.*
Louis H. Iselin, Ph.D.*
Raymund F. Eich, Ph.D.*
Daren C. Davis*
Stephanie A. Wardwell, Ph.D.*

***Patent Agent**

EXPRESS MAIL MAILING LABEL
NUMBER EL 522 495 908 US
DATE OF DEPOSIT April 30, 2002
I hereby certify that this paper or fee is being deposited with the United States Postal Service with sufficient postage "EXPRESS MAIL POST OFFICE TO ADDRESSEE" service under 37 C.F.R. 1.10 on the date indicated above and is addressed to: BOX PATENT APPLICATION, Assistant Commissioner for Patents, Washington D.C. 20231.
Kathy Manas
Signature

WRITER'S DIRECT DIAL:
(713) 934-4053

FILE: 2000.079600

APRIL 30, 2002

BOX PATENT APPLICATION
Assistant Commissioner for Patents
Washington, DC 20231

RE: *U.S. Patent Application Entitled "AGENT REACTIVE SCHEDULING IN AN AUTOMATED MANUFACTURING ENVIRONMENT"*
Inventors: Gustavo Mata, Steven C. Nettles, Larry D. Barto and Yiwei Li
Client Reference: TT4739

Sir:

Transmitted herewith for filing are:

(1) 55-page patent specification with 53 claims and an abstract (also Figures 1-7B on 6 sheets);
(2) Declaration;
(3) Assignment and Assignment Cover Sheet;
(4) Power of Attorney; and
(5) Request for Certification under 35 U.S.C. 122(b)(2)(B)(i).

JC885 U.S. PTO
04/30/02

All correspondence, notices, official letters and other communications should be directed to Jeffrey A. Pyle, Williams, Morgan & Amerson, P.C., 7676 Hillmont, Suite 250, Houston, TX 77040, and all telephone calls should be directed to Jeffrey A. Pyle at (713) 934-4053.

The Assistant Commissioner is authorized to deduct the amount of the total filing fee (listed below) from **Advanced Micro Devices, Inc. Deposit Account No. 01-0365/TT4739**.

FILING FEE CALCULATION

FOR		Small Entity	Large Entity
Total Claims	53 - 20 = 33	x $9 = $	Or x $18 = $ 594.00
Independent Claims	6 - 3 = 3	x $42 = $	Or x $84 = $ 252.00
Multiple Dependent Claim(s)		+ $140 = $	Or + $280= $ 0.00
Basic Fee:		+ $370 = $	Or + $740= $ 740.00
Assignment Recording Fee:	($40 per assignee)	+ = $	+ = $ 40.00
TOTAL FILING FEES		**$ 0.00**	**$1,626.00**

Pursuant to 37 C.F.R. § 1.10 the Applicant requests that the Patent and Trademark Office accept this application and accord a serial number and filing date as of the date this application is deposited with the U.S. Postal Service for Express Mail.

Please date stamp and return the enclosed postcard to evidence receipt of these materials.

Respectfully submitted,

Jeffrey A. Pyle
Reg. No. 34,904

JAP:ym
Enclosures
cc: Mr. Paul Drake, Esq. (w/o enc.)
Ms. Samantha Cardona (w/enc.)

PTO/SB/35 (11-00)
Approved for use through 10/31/2002. OMB 0651-0031
U.S. Patent and Trademark Office; U.S. DEPARTMENT OF COMMERCE
Under the Paperwork Reduction Act of 1995, no persons are required to respond to a collection of information unless it displays a valid OMB control number.

REQUEST AND CERTIFICATION UNDER 35 U.S.C. 122(b)(2)(B)(i)	First Named Inventor: **GUSTAVO MATA** Title: **AGENT REACTIVE SCHEDULING IN AN AUTOMATED MANUFACTURING ENVIRONMENT** Attorney Docket Number: 2000.079600/TT4739

I hereby certify that the invention disclosed in the attached application **has not and will not be** the subject of an application filed in another country, or under a multilateral agreement, that requires publication at eighteen months after filing. I hereby request that the attached application not be published under 35 U.S.C. 122(b).

Date: April 30, 2002

Signature

Jeffrey A. Pyle
Typed or printed name

This request must be signed in compliance with 37 CFR 1.33(b) and submitted with the application **upon filing**.

Applicant may rescind this nonpublication request at any time. If applicant rescinds a request that an application not be published under 35 U.S.C. 122(b), the application will be scheduled for publication at eighteen months from the earliest claimed filing date for which a benefit is claimed.

If applicant subsequently files an application directed to the invention disclosed in the attached application in another country, or under a multilateral international agreement, that requires publication of applications eighteen months after filing, the applicant **must** notify the United States Patent and Trademark Office of such filing within forty-five (45) days after the date of the filing of such foreign or international application. **Failure to do so will result in abandonment of this application (35 U.S.C. 122(b)(2)(B)(iii).**

Burden Hour Statement: This collection of information is required by 37 CFR 1.213(a). The information is used by the public to request that an application not be published under 35 U.S.C. 122(b) (and the PTO to process that request). Confidentiality is governed by 35 U.S.C. 122 and 37 CFR 1.14. This form is estimated to take 6 minutes to complete. This time will vary depending upon the needs of the individual case. Any comments on the amount of time you are required to complete this form should be sent to the Chief Information Officer, U.S. Patent and Trademark Office, Washington, DC 20231. DO NOT SEND FEES OR COMPLETED FORMS TO THIS ADDRESS. SEND TO: Assistant Commissioner for Patents, Washington, DC 20231.

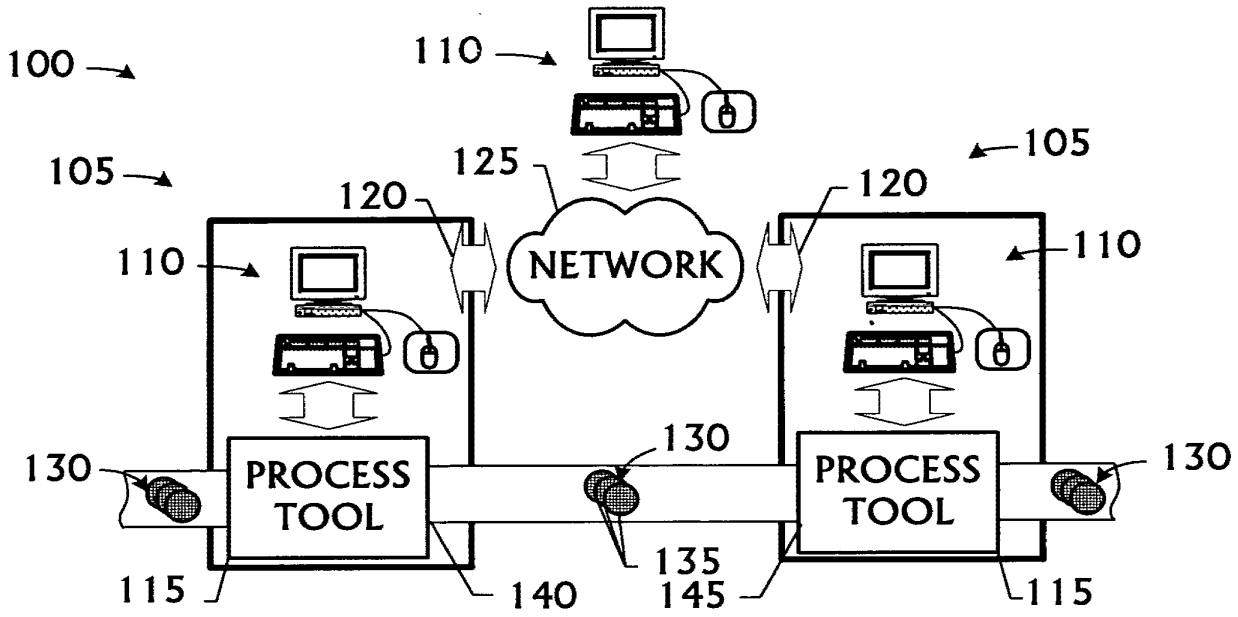
100
110
105
125
105
120
120
NETWORK
110
110
130
PROCESS TOOL
130
PROCESS TOOL
130
135
115
140
145
115

FIG. 1

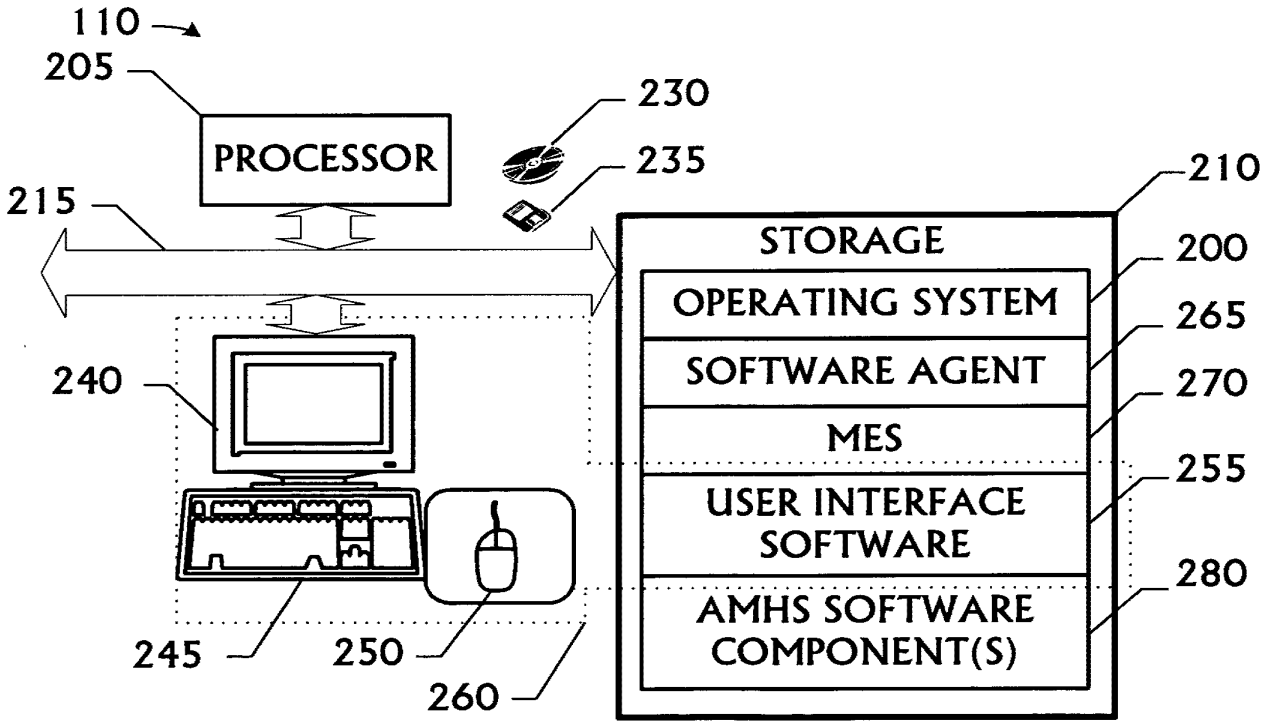
110
205
PROCESSOR
230
235
215
210
STORAGE
200
OPERATING SYSTEM
265
SOFTWARE AGENT
270
MES
255
USER INTERFACE SOFTWARE
280
AMHS SOFTWARE COMPONENT(S)
240
245
250
260

FIG. 2

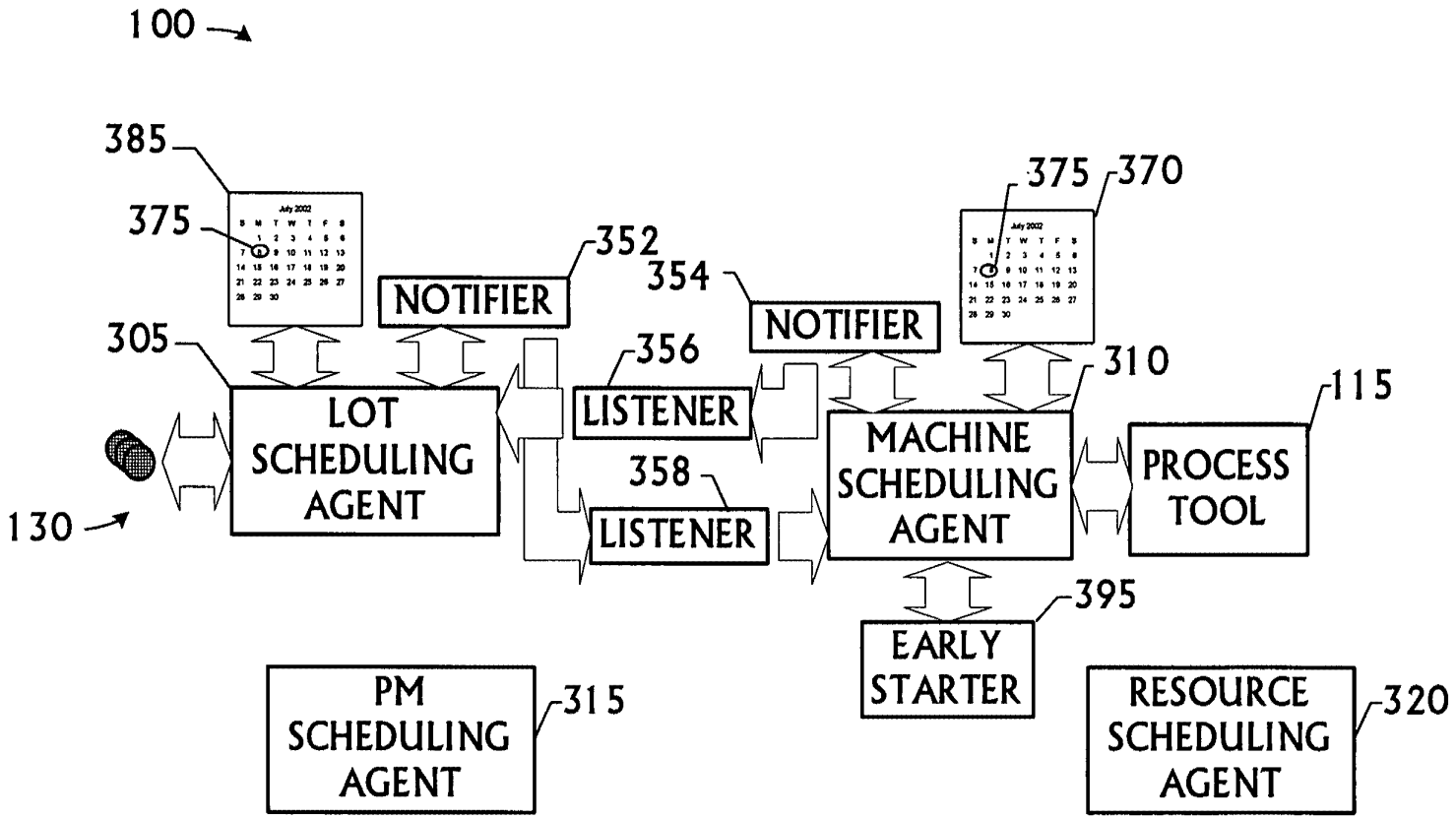
100
385
375
352
NOTIFIER
354
NOTIFIER
375
370
305
356
LISTENER
310
115
LOT SCHEDULING AGENT
MACHINE SCHEDULING AGENT
PROCESS TOOL
130
358
LISTENER
395
EARLY STARTER
PM SCHEDULING AGENT
315
RESOURCE SCHEDULING AGENT
320

FIG. 3

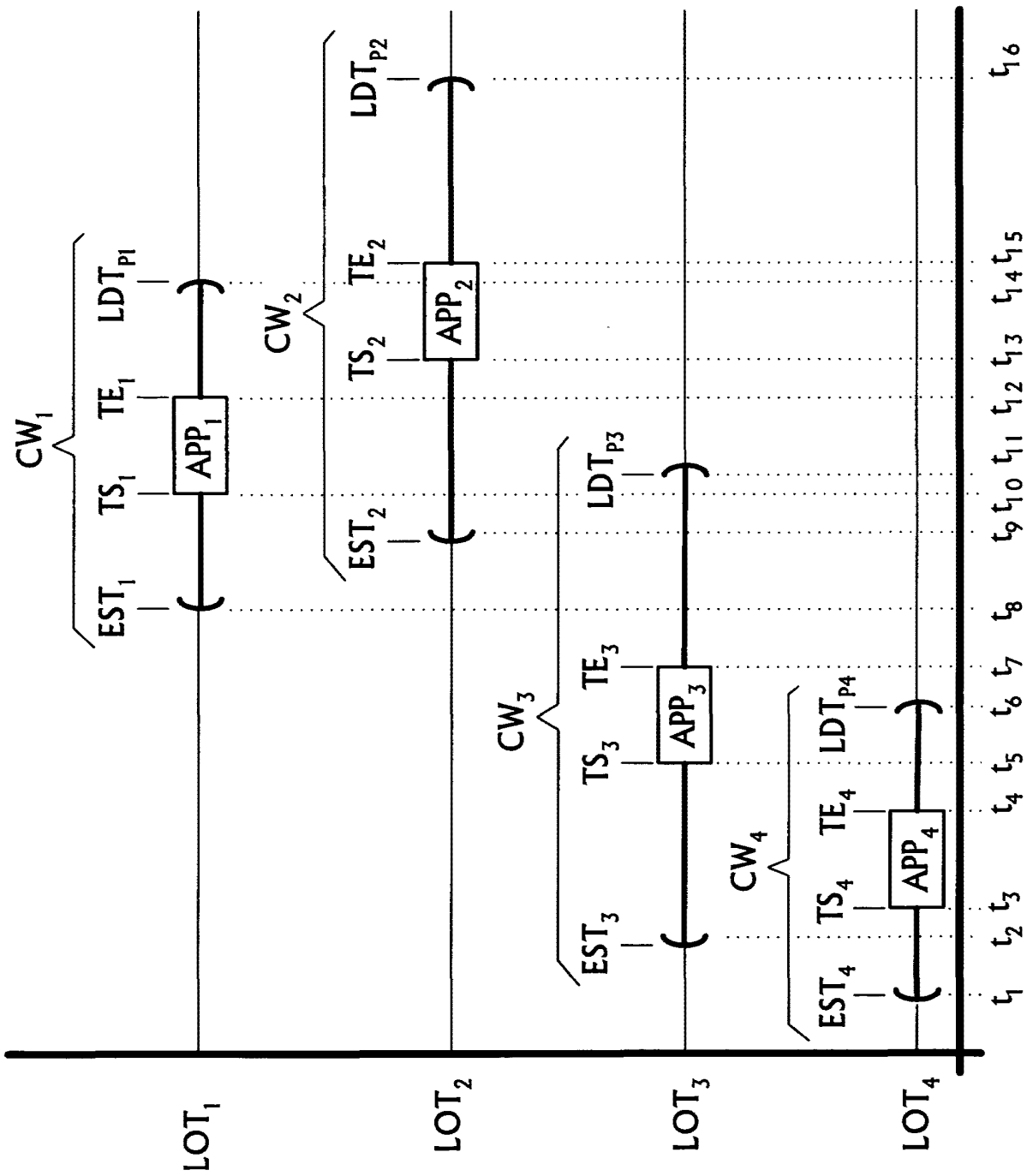
LOT1
LOT2
LOT3
LOT4
CW1
EST1
TS1
TE1
LDTP1
APP1
CW2
EST2
TS2
TE2
LDTP2
APP2
CW3
EST3
TS3
TE3
LDTP3
APP3
CW4
EST4
TS4
TE4
LDTP4
APP4
t1 t2 t3 t4 t5 t6 t7 t8 t9 t10 t11 t12 t13 t14 t15 t16

FIG. 4

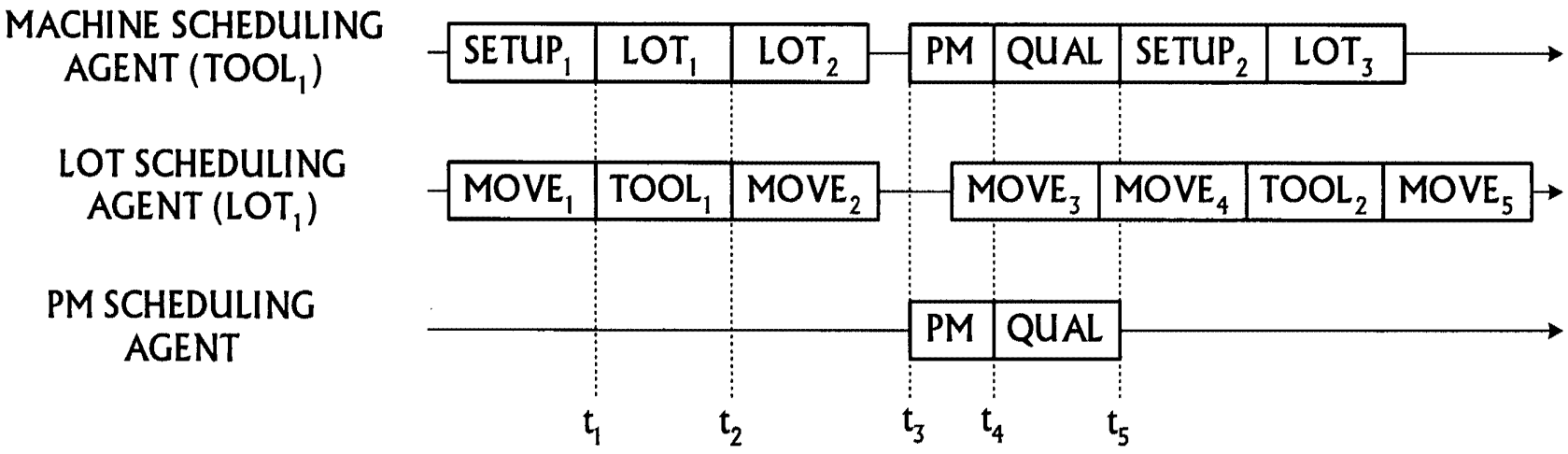
MACHINE SCHEDULING AGENT (TOOL$_1$)
LOT SCHEDULING AGENT (LOT$_1$)
PM SCHEDULING AGENT
SETUP$_1$
LOT$_1$
LOT$_2$
PM
QUAL
SETUP$_2$
LOT$_3$
MOVE$_1$
TOOL$_1$
MOVE$_2$
MOVE$_3$
MOVE$_4$
TOOL$_2$
MOVE$_5$
PM
QUAL
t_1
t_2
t_3
t_4
t_5

FIG. 5

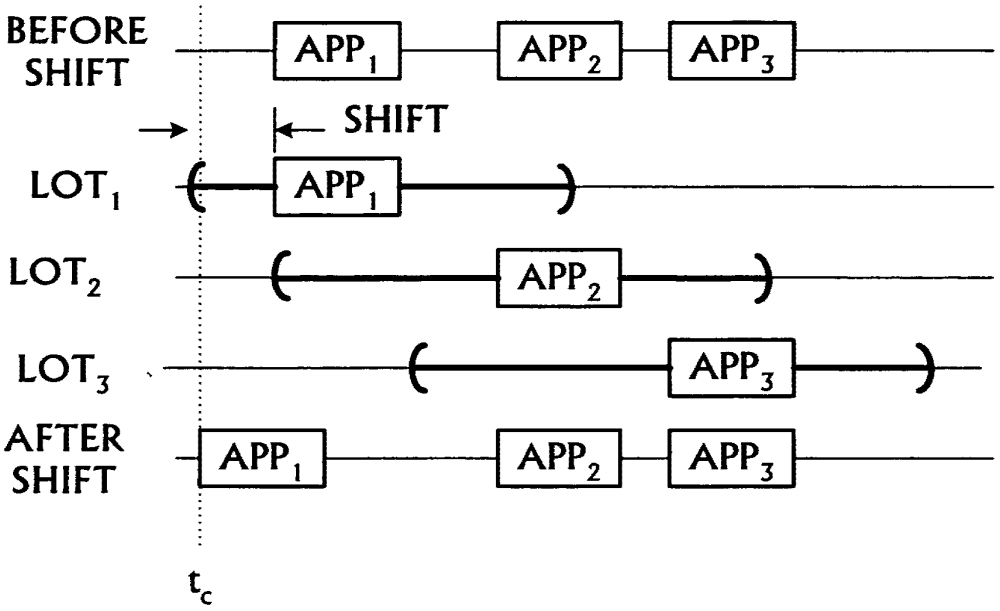
BEFORE SHIFT
APP1
APP2
APP3
SHIFT
LOT1
APP1
LOT2
APP2
LOT3
APP3
AFTER SHIFT
APP1
APP2
APP3
tc

FIG. 6A

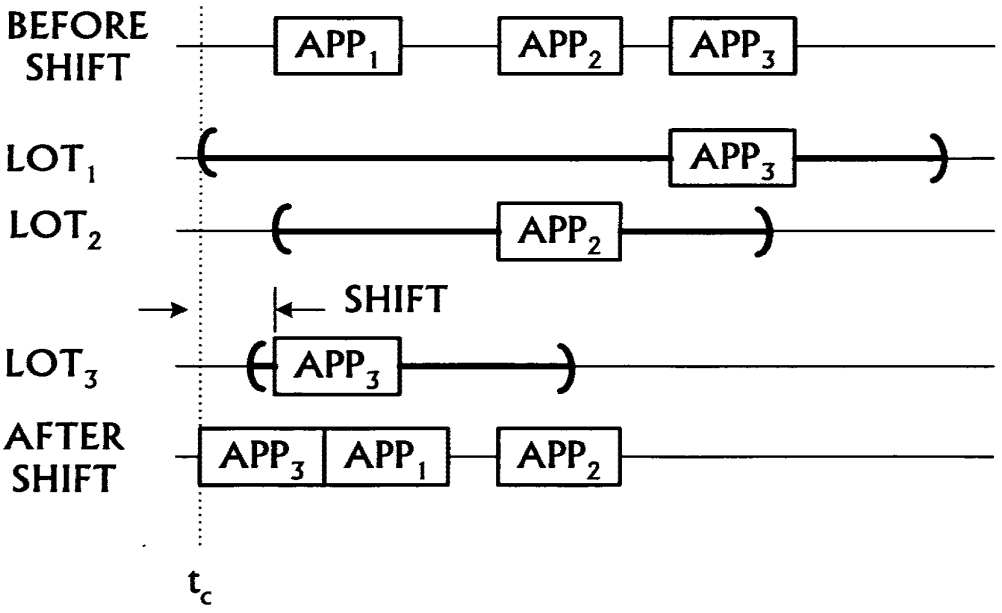
BEFORE SHIFT
APP1
APP2
APP3
LOT1
APP3
LOT2
APP2
SHIFT
LOT3
APP3
AFTER SHIFT
APP3
APP1
APP2
tc

FIG. 6B

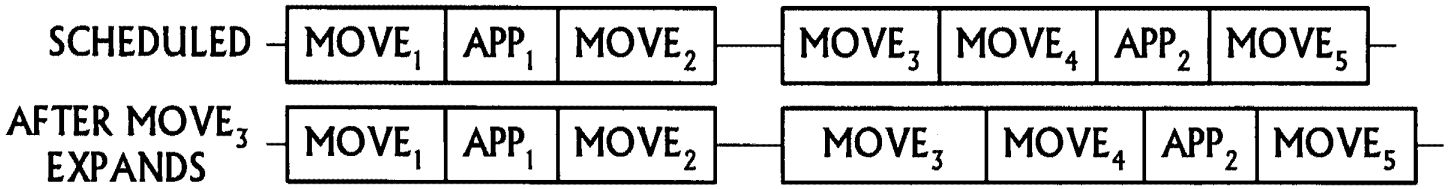
SCHEDULED
MOVE1
APP1
MOVE2
MOVE3
MOVE4
APP2
MOVE5
AFTER MOVE3 EXPANDS
MOVE1
APP1
MOVE2
MOVE3
MOVE4
APP2
MOVE5

FIG. 7A

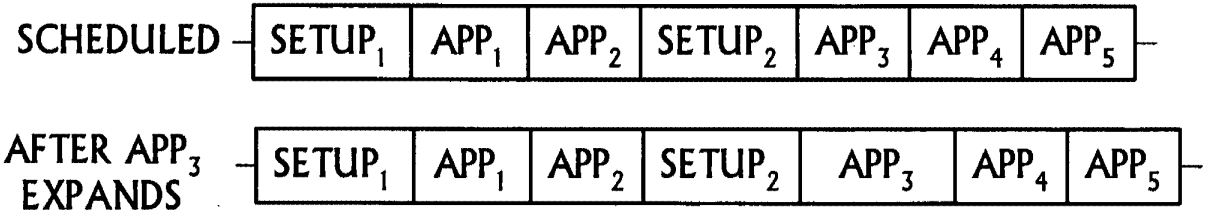
SCHEDULED
SETUP1
APP1
APP2
SETUP2
APP3
APP4
APP5
AFTER APP3 EXPANDS
SETUP1
APP1
APP2
SETUP2
APP3
APP4
APP5

FIG. 7B

WMA Docket No. 2000.079600
Client Docket No. TT4739

Application for United States Letters Patent

for

AGENT REACTIVE SCHEDULING IN AN AUTOMATED MANUFACTURING ENVIRONMENT

by

Gustavo Mata
Steven C. Nettles
Larry D. Barto
Yiwei Li

EXPRESS MAIL MAILING LABEL

NUMBER EL 522495908 US

DATE OF DEPOSIT 04/30/02

I hereby certify that this paper or fee is being deposited with the United States Postal Service with sufficient postage "EXPRESS MAIL POST OFFICE TO ADDRESSEE" service under 37 C.F.R. 1.10 on the date indicated above and is addressed to: BOX PATENT APPLICATION, Assistant Commissioner for Patents, Washington, D.C. 20231.

Kathy Alonzo
Signature

AGENT REACTIVE SCHEDULING IN AN AUTOMATED MANUFACTURING ENVIRONMENT

BACKGROUND OF THE INVENTION

The United States Government has a paid-up license in this invention and the right in limited circumstances to require the patent owner to license others on reasonable terms as provided for by the terms of Award No. 70NANB7H3041 awarded by the United States Department of Commerce, National Institute of Standards and Technology ("NIST").

1. FIELD OF THE INVENTION

This invention pertains to automated manufacturing environments, and, more particularly, to scheduling in an automated manufacturing environment.

2. DESCRIPTION OF THE RELATED ART

Growing technological requirements and the worldwide acceptance of sophisticated electronic devices have created an unprecedented demand for large-scale, complex, integrated circuits. Competition in the semiconductor industry requires that products be designed, manufactured, and marketed in the most efficient manner possible. This requires improvements in fabrication technology to keep pace with the rapid improvements in the electronics industry. Meeting these demands spawns many technological advances in materials and processing equipment and significantly increases the number of integrated circuit designs. These improvements also require effective utilization of computing resources and other highly sophisticated equipment to aid, not only design and fabrication, but also the scheduling, control, and automation of the manufacturing process.

Turning first to fabrication, integrated circuits, or microchips, are manufactured from modern semiconductor devices containing numerous structures or features, typically the size of a few micrometers. The fabrication process generally involves processing a number of wafers through a series of fabrication tools. Layers of materials are added to, removed from, and/or treated on a semiconducting substrate during fabrication to create the integrated circuits. The fabrication essentially comprises the following four basic operations:

Petitioner STMICROELECTRONICS, INC.,
Ex. 1006, IPR2022-00681, Pg. 83

- layering, or adding thin layers of various materials to a wafer from which a semiconductor is produced;
- patterning, or removing selected portions of added layers;
- doping, or placing specific amounts of dopants in selected portions of the wafer through openings in the added layers; and
- heat treating, or heating and cooling the materials to produce desired effects in the processed wafer.

Although there are only four basic operations, they can be combined in hundreds of different ways, depending upon the particular fabrication process. *See*, *e.g.*, Peter Van Zant, *Microchip Fabrication A Practical Guide to Semiconductor Processing* (3d Ed. 1997 McGraw-Hill Companies, Inc.) (ISBN 0-07-067250-4). Each fabrication tool performs one or more of four basic operations. The four basic operations are performed in accordance with an overall process to finally produce the finished semiconductor devices.

Controlling a semiconductor factory fabricating such integrated circuits, however, is a challenging task. A semiconductor factory ("fab") is a complex environment where numerous parts, typically 40,000 wafers or more, and numerous part types, typically 100 part types or more, are simultaneously being manufactured. As each wafer moves through the semiconductor factory (or, "fab"), it may undergo more than 300 processing steps, many of which use the same machines. A large factory may contain approximately 500 computer-controlled machines to perform this wafer processing. Routing, scheduling, and tracking material through the fab is a difficult and complicated task, even with the assistance of a computerized factory control system.

Efficient management of a facility for manufacturing products such as semiconductor chips requires monitoring various aspects of the manufacturing process. For example, it is typically desirable to track the amount of raw materials on hand, the status of work-in-process and the status and availability of machines and tools at every step in the process. One of the most important decisions is selecting which lot should run on each machine at any given time. Additionally, most machines used in the manufacturing process require scheduling of routine preventative maintenance ("PM") and equipment qualification ("Qual") procedures, as well as other diagnostic and reconditioning procedures that must be performed

Petitioner STMICROELECTRONICS, INC.,
Ex. 1006, IPR2022-00681, Pg. 84

on a regular basis. These procedures should be performed such that they do not impede the manufacturing process itself.

One approach to this issue implements an automated "**M**anufacturing **E**xecution **S**ystem" ("MES"). An automated MES enables a user to view and manipulate, to a limited extent, the status of machines and tools, or "entities," in a manufacturing environment. In addition, an MES permits dispatching and tracking of lots or work-in-process through the manufacturing process to enable resources to be managed in the most efficient manner. Specifically, in response to MES prompts, a user inputs requested information regarding work-in-process and entity status. For example, when a user performs a PM on a particular entity, the operator logs the performance of the PM (an "event") into an MES screen to update the information stored in the MES database with respect to the status of that entity. Alternatively, if an entity is to be put down for repair or maintenance, the operator will log this information into the MES database, which then prevents use of the entity until it is subsequently logged back up.

Although MES systems are sufficient for tracking lots and machines, such systems suffer several deficiencies, the most obvious of which are their passive nature, lack of advance scheduling and inability to support highly automated factory operations. Current MES systems largely depend on manufacturing personnel for monitoring factory state and initiating activities at the correct time. For example, a lot does not begin processing until a **w**afer **f**ab **t**echnician ("WFT") issues the appropriate MES command. And, prior to processing, a WFT must issue an MES command to retrieve the lot from the **a**utomated **m**aterial **h**andling **s**ystem ("AMHS") with sufficient advance planning that the lot is available at the machine when the machine becomes available. If the WFT does not retrieve the lot soon enough, or neglects to initiate processing at the earliest available time, the machine becomes idle and production is adversely impacted.

These types of deficiencies in the typical automated MES emphasize the importance of the WFT in the efficient operation of the manufacturing process. WFTs perform many vital functions. For instance, WFTs initiate dispatching, transport, and processing as their attention and time permits. They make scheduling decisions such as whether to run an incomplete batch, as opposed to waiting for additional approaching lots, or performing PM or

Petitioner STMICROELECTRONICS, INC.,
Ex. 1006, IPR2022-00681, Pg. 85

qualification procedures instead of processing lots. WFTs perform non-value added MES transactions and utilize conventional factory control systems that are passive. In this context, the term "passive" means activities in the control system must be initiated by the WFT, as opposed to being self-starting or self-initiating.

However, the presence of WFTs also inevitably introduces some inefficiencies. There typically is a large difference between the performance of the best WFT and the performance of the worst WFT. A WFT typically simultaneously monitors the processing of multiple tools and lots, making it difficult to focus on an individual lot or tool. Furthermore, the size and complexity of the modern fabrication process flows makes it exceedingly difficult for a WFT to foresee and prevent downstream bottlenecks or shortages arising from upstream activities. Shift changes, rest breaks, and days off for the WFT also create inefficiencies or machine idle time that adversely impact the manufacturing process flow. Just as the importance of the WFT is magnified by the deficiencies of the automated MES, so are the inefficiencies of the WFT magnified by his importance.

Thus, factory control systems utilized in today's wafer fabs are passive and do not enable a high degree of automation. These systems are very dependent on WFTs and other factory staff to monitor the state of the factory, to continuously react to change, to make rapid logistical decisions, and to initiate and coordinate factory control activity in a timely manner. These WFTs are *agents*, providing the active element that is lacking in factory control systems. As a result, factory effectiveness in the highly competitive semiconductor industry is quite dependent on the availability, productivity, skill level, and consistency of these human agents. WFTs must monitor and operate a number of tools located in various bays in a fab. They are forced to multiplex across tools, bays, material handling systems and a variety of factory control systems. As a fab's production ramps and more complex processes are introduced, it becomes more difficult to meet the increased complexity and volume without increasing staff or system capabilities. WFTs visibility of upstream and downstream operations, tool state, work-in-process and resource availability is limited.

However, key logistical decisions are frequently based on this limited and dated information, which is only partially provided by factory control systems. WFTs spend a significant amount of time interacting with systems, monitoring factory events and state

Petitioner STMICROELECTRONICS, INC.,
Ex. 1006, IPR2022-00681, Pg. 86

changes, and performing other non-value added functions, such as MES logging. Shift changes disrupt the operation of the fab as the technicians are temporarily unable to provide required monitoring and coordination. Despite the best efforts of the technicians, utilization of tools suffer, adversely impacting other key factory metrics including cycle time, inventory levels, factory output and mix. With the need for intrabay material handling to transport 12-inch wafers in new 300 mm wafer fabs, significant additional complexity is introduced. Conventional factory control systems are not capable of providing this level of detailed scheduling and execution control.

The present invention is directed to resolving, or at least reducing, one or all of the problems mentioned above.

SUMMARY OF THE INVENTION

The invention, in its various aspects and embodiments, is a method and apparatus for scheduling in an automated manufacturing environment. In one embodiment, a method comprises detecting an occurrence of a predetermined event in a process flow; notifying a software scheduling agent of the occurrence; and reactively scheduling an action from the software scheduling agent responsive to the detection of the predetermined event. Alternative embodiments include a computing system programmed to perform this method and a computer-readable program storage medium encoded with instructions to implement this method. In still another embodiment, the invention includes automated manufacturing environment, comprising a process flow and a computing system. The computing system further includes a plurality of software scheduling agents residing thereon, the software scheduling agents being capable of reactively scheduling appointments for activities in the process flow responsive to a plurality of predetermined events.

BRIEF DESCRIPTION OF THE DRAWINGS

The invention may be understood by reference to the following description taken in conjunction with the accompanying drawings, in which like reference numerals identify like elements, and in which:

Petitioner STMICROELECTRONICS, INC.,
Ex. 1006, IPR2022-00681, Pg. 87

FIG. 1 conceptually depicts a portion of one particular embodiment of a process flow constructed and operated in accordance with the present invention;

FIG. 2 conceptually depicts, in a partial block diagram, selected portions of the hardware and software architectures, respectively, of the computing devices in **FIG. 1**;

FIG. 3 conceptually depicts one particular implementation of the apparatus of **FIG. 1**, *i.e.*, in a portion of a process flow from a semiconductor fabrication facility, and the manner in which it schedules appointments for the consumption of resources;

FIG. 4 conceptually depicts a calendar of booked appointments;

FIG. 5 conceptually illustrates three related calendars of booked appointments;

FIG. 6A and **FIG. 6B** conceptually illustrates the changing of booked appointments to take advantage of early start times; and

FIG. 7A and **FIG. 7B** conceptually illustrate two circumstances in which booked appointments are changed to accommodate unexpectedly long durations for preceding booked appointments.

While the invention is susceptible to various modifications and alternative forms, specific embodiments thereof have been shown by way of example in the drawings and are herein described in detail. It should be understood, however, that the description herein of specific embodiments is not intended to limit the invention to the particular forms disclosed, but on the contrary, the intention is to cover all modifications, equivalents, and alternatives falling within the spirit and scope of the invention as defined by the appended claims.

DETAILED DESCRIPTION OF THE INVENTION

Illustrative embodiments of the invention are described below. In the interest of clarity, not all features of an actual implementation are described in this specification. It will of course be appreciated that in the development of any such actual embodiment, numerous implementation-specific decisions must be made to achieve the developers' specific goals, such as compliance with system-related and business-related constraints, which will vary from one implementation to another. Moreover, it will be appreciated that such a development effort, even if complex and time-consuming, would be a routine undertaking for those of ordinary skill in the art having the benefit of this disclosure.

Petitioner STMICROELECTRONICS, INC.,
Ex. 1006, IPR2022-00681, Pg. 88

FIG. 1 conceptually illustrates a portion of one particular embodiment of a process flow 100 constructed and operated in accordance with the present invention. The process flow 100 fabricates semiconductor devices. However, the invention may be applied to other types of manufacturing processes. Thus, in the process flow 100 discussed above, the lots 130 of wafers 135 may be more generically referred to as "work pieces." The process tools 115 and any process operations performed thereon need not necessarily be related to the manufacture of semiconductor devices in all embodiments. However, for the sake of clarity and to further an understanding of the invention, the terminology pertaining to semiconductor fabrication is retained in disclosing the invention in the context of the illustrated embodiments.

The illustrated portion of the process flow 100 includes two stations 105, each station 105 including a computing device 110 communicating with a process tool 115. The stations 105 communicate with one another over communications links 120. In the illustrated embodiment, the computing devices 110 and the communications links 120 comprise a portion of a larger computing system, *e.g.*, a network 125. The process tools 115 in **FIG. 1** are processing lots 130 of wafers 135 that will eventually become integrated circuit devices. The process flow 100 also includes portions of a MES and an automated materials handling system ("AMHS"), neither of which is shown for the sake of clarity, and other integrated factory controls. The AMHS "handles" the lots 130 and facilitates their transport from one station 105 to another, as well as other locations in the process flow 100.

As mentioned above, the computing devices 110 may be part of a larger computing system 125 by a connection over the communications links 120. Exemplary computing systems in such an implementation would include local area networks ("LANs"), wide area networks ("WANs"), system area networks ("SANs"), intranets, or even the Internet. The computing system 125 employs a networked client/server architecture, but alternative embodiments may employ a peer-to-peer architecture. Thus, in some alternative embodiments, the computing devices 110 may communicate directly with one another. The communications links 120 may be wireless, coaxial cable, optical fiber, or twisted wire pair links, for example. The computing system 125, in embodiments employing one, and the communications links 120 will be implementation specific and may be implemented in any suitable manner known to the art. The computing system 125 may employ any suitable

Petitioner STMICROELECTRONICS, INC.,
Ex. 1006, IPR2022-00681, Pg. 89

communications protocol known to the art, *e.g.*, Transmission Control Protocol/Internet Protocol ("TCP/IP").

FIG. 2 depicts selected portions of the hardware and software architectures of the computing devices 110. Some aspects of the hardware and software architecture (*e.g.*, the individual cards, the basic input/output system ("BIOS"), input/output drivers, *etc.*) are not shown. These aspects are omitted for the sake of clarity, and so as not to obscure the present invention. As will be appreciated by those of ordinary skill in the art having the benefit of this disclosure, however, the software and hardware architectures of the computing devices 110 will include many such routine features.

In the illustrated embodiment, the computing device 110 is a workstation, employing a UNIX-based operating system 200, but the invention is not so limited. The computing device 110 may be implemented in virtually any type of electronic computing device such as a notebook computer, a desktop computer, a mini-computer, a mainframe computer, or a supercomputer. The computing device 110 may even be, in some alternative embodiments, a processor or controller embedded in the process tool 115. The invention also is not limited to UNIX-based operating systems. Alternative operating systems (*e.g.*, Windows™-, Linux™-, or disk operating system ("DOS") -based) may also be employed. The invention is not limited by the particular implementation of such features in the computing device 110.

The computing device 110 also includes a processor 205 communicating with storage 210 over a bus system 215. The storage 210 typically includes at least a hard disk (not shown) and random access memory ("RAM") (also not shown). The computing device 110 may also, in some embodiments, include removable storage such as an optical disk 230, or a floppy electromagnetic disk 235, or some other form, such as a magnetic tape (not shown) or a zip disk (not shown). The computing device 110 includes a monitor 240, keyboard 245, and a mouse 250, which together, along with their associated user interface software 255 comprise a user interface 260. The user interface 260 in the illustrated embodiment is a graphical user interface ("GUI"), although this is not necessary to the practice of the invention.

Petitioner STMICROELECTRONICS, INC.,
Ex. 1006, IPR2022-00681, Pg. 90

Each computing device 110 includes, in the illustrated embodiment, a software agent 265 residing in the storage 210. Note that the software agents 265 may reside in the process flow 100 in places other than the computing devices 110. The *situs* of the software agent 265 is not material to the practice of the invention. Note also that, since the *situs* of the software agents 265 is not material, some computing devices 110 may have multiple software agents 265 residing thereon while other computing devices 110 may not have any. Thus, there need not be a one-to-one correspondence between the computing devices 100 and the process tools 115. Software component(s) 270, 280 of an automated MES, such as WORKSTREAM™, and of an AMHS, respectively, also reside on at least one computing device 110. As with the software agent(s) 265, the software components 270, 280 may reside anywhere within the process flow 100.

Referring now to **FIG. 1** and **FIG. 2**, the software agents 265 each represent some "manufacturing domain entity," *e.g.*, a lot 130, a process tool 115, a resource, a PM, or a Qual. A process tool 115 may be a fabrication tool used to fabricate some portion of the wafers 135, *i.e.*, layer, pattern, dope, or heat treat the wafers 135. Or, the process tool 115 may be a metrology tool used to evaluate the performance of various parts of the process flow 100. The software agents 265, collectively, are responsible for efficiently scheduling and controlling the lots 130 of wafers 135 through the fabrication process. In furtherance of these objectives, the software agents 265 interface with the software components 270, 280 of the MES and AMHS, respectively, and are integrated with other existing factory control systems (not shown). The software agents 265, where appropriate, also interface with the process tools 115 and other equipment through a software implemented "equipment interface" ("EI") (not shown). As will be apparent to those skilled in the art having the benefit of this disclosure, the manner in which this interface and integration occurs is implementation specific, depending upon the makeup and configuration of the MES, the AMHS, and the other factory control systems.

Of particular interest to the present invention, the software agents 265 reactively schedule, initiate, and execute activities on behalf of their respective manufacturing domain entities. In the illustrated embodiment, the software agents 265 also proactively schedule activities. Collectively, the software agents 265, among other things, schedule ahead for each lot 130 one or more operations on a specific qualified process tool 115, including transports

Petitioner STMICROELECTRONICS, INC.,
Ex. 1006, IPR2022-00681, Pg. 91

and required resources, as discussed further below. This includes making optimizing decisions such as running an incomplete batch, as opposed to waiting for an approaching lot 130, and scheduling opportunistic **p**reventive **m**aintenance ("PM") procedures or qualification tests ("Quals") to meet specifications. The software agents 265 schedule and initiate activities such as lot transport and processing; perform MES transactions; monitor processing and transport; and react to unscheduled activities or deviations from scheduled activities. Furthermore, in the illustrated embodiment, the software agents 265 are configurable in a manner that allows a user to influence their behavior in order to tune the performance of the process flow 100.

In the illustrated embodiment, the scheduling agents 265 are typed by the manufacturing domain entities they represent. There may be many different types of scheduling agents 265, depending on the implementations. The principle types of scheduling agents 265 in the illustrated embodiment, shown in **FIG. 3**, include:

- a **L**ot **S**cheduling **A**gent ("LSA") 305 that schedules activities on behalf of lots 130 of wafers 135;
- a **M**achine **S**cheduling **A**gent ("MSA") 310 that schedules activities on behalf of process tools 115;
- a **PM S**cheduling **A**gent ("PMSA") 315 that schedules activities on behalf of PMs and Quals (not shown); and
- a **R**esource **S**cheduling **A**gent ("RSA") 320 that schedules activities on behalf of resources (not shown).

However, other types may be employed in addition to, or in lieu of, those shown. The roles and functions of each of these of scheduling agents 265 in the illustrated embodiment will be more fully discussed below.

Some of these activities are scheduled reactively, *i.e.*, in response to events occurring in, *e.g.*, the process flow 100, in accordance with the present invention. In one particular embodiment, this includes:

- detecting an occurrence of a predetermined event in a process flow, *e.g.*, the process flow 100;
- notifying a subscribing software scheduling agent, *e.g.*, the LSA 305, the MSA 310, the PMSA 315, or the RSA 320, of the occurrence; and

Petitioner STMICROELECTRONICS, INC.,
Ex. 1006, IPR2022-00681, Pg. 92

- reactively scheduling an action responsive to the detection of the predetermined event.

The predetermined event and the reactively scheduled action will be implementation specific. Several exemplary events and reactively scheduled actions are discussed further below.

Note that this type of reactive scheduling implies a knowledge that such events are occurring within the process flow 100. To this end, the software agents 265 respond to additional software components, not shown, known as "publishers" (or, "notifiers") and "subscribers." Agents create listeners which subscribe to one or more notifiers. Notifiers "publish" events to their subscribing listeners when changes occur within the factory. Listeners, in turn, call their subscribing software agent 265. For example, when a MSA is created, the agent will create a machine listener that subscribes to specific machine events. The MSA is interested in receiving any changes that occur to a particular machine. For example, if the availability of the machine changes, the publisher will publish the event to all of its listeners. The machine listener will then notify the subscribing MSA about the event. The subscribing MSA will then react appropriately.

More particularly, when the software agents 265 are created, they create listeners and subscribe to published events by adding the listeners to the event publisher. Listeners enable the software agents 265 to react to events in the process flow 100 in an appropriate manner. Table 1, below, lists the relevant software agents 265 employed in the illustrated embodiment, the listeners they create, and a description of their function. Note that the use of publishers and subscribers via listeners and notifiers in this manner is known to the art, and any suitable technique may be employed.

Table 1. Software Agents and Associated Listeners

Software Agent	Associated Listeners	Reason for Subscribing
RSA (*e.g.*, a resource loading agent)	Equipment Event Listener	Listens to events from the Equipment Interface. Events may include loading started, charging started, loading completed, charging completed, *etc.*

Petitioner STMICROELECTRONICS, INC.,
Ex. 1006, IPR2022-00681, Pg. 93

Software Agent	Associated Listeners	Reason for Subscribing
	Machine Listener	Listens to MES events that occur on the machine. For example, it listens when a machine is not available and reacts appropriately.
	Process Operation Listener	Listens to changes within a process operation since it might change the processing capability of a machine.
	Process Listener	Listens to changes within a process since it might change the processing capability of a machine.
	Alarm Listener	Listens to alarms that have been set at start or end times for scheduled activities.
	Schedule Advertisement Listener	Listens to "advertised" time slots for scheduled appointments that have not started.
	Appointment State Change Listener	Listens to any corresponding appointments on scheduling calendars of other agents that might affect its calendar.
LSA	Alarm Listener	Listens to alarms that have been set at start or end times for scheduled activities.
	Lot Listener	Listens to MES events that occur on the lot, such as product change, priority change, wafer count, and so on.
	AMHS Listener	Listens to changes in the location of the lot of represented by the LSA.
	Appointment State Change Listener	Listens to any corresponding appointments on scheduling calendars of other agents that might affect its calendar.
MSA	Alarm Listener	Listens to alarms that have been set at start or end times for scheduled activities.
	Process Operation Listener	Listens to changes within a process operation since it might change the processing capability of a machine.
	Machine Listener	Listens to MES events occurring on the machine. For example, it listens when a machine is not available.
	Appointment State Change Listener	Listens to any corresponding appointments on scheduling calendars of other agents that might affect its calendar.

Petitioner STMICROELECTRONICS, INC.,
Ex. 1006, IPR2022-00681, Pg. 94

Software Agent	Associated Listeners	Reason for Subscribing
	Chamber Listener	Listens to MES events that occur at chamber level, such as downtime, PM, or Quals.
	Process Listener	Listens to changes within a process since it might change the processing capability of a machine.
	Equipment Event Listener	Listens to events from the Equipment Interface. Events may include carrier arriving at the machine port, processing started, processing near complete, carrier departed, *etc.*
PM Scheduling Agent ("PMSA")	Chamber Listener	Listens to MES events that occur at chamber level, such as downtime, PM, or Quals.
	Machine Listener	Listens to MES events that occur on the machine. For example, it listens when a machine is not available.
	Qual Collection Listener	Listens to any new Quals or deleted Quals.
	PM Collection Listener	Listens for any new PMs or deleted PMs.
	Appointment State Change Listener	Tracks changes to any appointments that might affect his calendar.

As is evident from Table 1, the software agents 265 listed therein listen to appointment changes that might affect their calendar. Consider, for example, **FIG. 5** (discussed in more detail below) in conjunction with Table 1. **FIG. 5** illustrates different appointments (*$SETUP_1$*, *LOT_1*, *$MOVE_1$*, *$TOOL_1$*, *PM*, *QUAL*, *etc.*) that are contained within the calendars for each of several agents (the MSA for $TOOL_1$, the LSA for LOT_1, a PMSA, and a RSA). **FIG. 5** also illustrates corresponding appointments between those calendars. For example, the MSA calendar contains a processing appointment *LOT_1* that corresponds with the processing appointment *$TOOL_1$* on the LSA calendar. These two appointments are actually for the same event (*i.e.*, the processing of LOT_1 on $TOOL_1$) made by two different entities (*i.e.*, the MSA and the LSA, respectively) for two different entities (*i.e.*, the lot LOT_1 and the processing tool $TOOL_1$).

Referring now to both **FIG. 3** and **FIG. 5**, when corresponding appointments (*e.g.*, *LOT_1*, *$TOOL_1$*) are created, the appointments themselves may contain a collection of listeners, *e.g.*, the listeners 356, 358 in **FIG. 3**. Listeners are added to the appointment when other

Petitioner STMICROELECTRONICS, INC.,
Ex. 1006, IPR2022-00681, Pg. 95

software agents 265 want to be notified that the appointment has changed. In this case, the lot processing appointment LOT_I on the MSA calendar 370 contains a listener 356 that notifies the LSA 305 through a notifier 354 when the processing appointment LOT_I changes. On the other hand, the lot appointment $TOOL_I$ contains a listener 358 that notifies the MSA 310 through a notifier 352 when it changes. If the MSA 310 changes the processing appointment LOT_I, the LSA 305 will be notified of the appointment change and it will modify the appointment $TOOL_I$ accordingly. Thus, listeners enable the software agents 265 to synchronize the corresponding appointments. Also, the software agents 265 can schedule reactively to such predetermined events when appropriate and can then keep their calendars updated as changes are instituted by other software agents 265.

When the software agents 265 react to appointment changes, they carefully manipulate the corresponding appointments. In some cases, it would be inappropriate for two software agents 265 to manipulate their respective corresponding appointments at the same time. Thus, a single software agent 265 is responsible for manipulating its respective corresponding appointment, which will then prompt the software agent 265 of the corresponding appointment to manipulate its respective corresponding appointment. For example, in **FIG. 5**, the LSA 305 contains a move appointment $MOVE_I$ followed by the lot processing appointment $TOOL_I$. If the end time for the move appointment $MOVE_I$ arrives but the appointment is not finished, an alarm listener notifies the LSA 305. ("Alarms" are one type of event listened for, and are discussed further below.) The LSA 305 then expands the duration of the move appointment $MOVE_I$ by a configurable amount of time, but also shifts the lot processing appointment $TOOL_I$ to accommodate the expansion of the move appointment $MOVE_I$.

At the same time, the alarm listener for the MSA 310 will notify it that the start of the lot processing appointment $TOOL_I$ has arrived. Since the LSA 305 can best determine when the lot LOT_I should arrive at the process tool 115, the LSA 305 shifts the start time of the lot processing appointment $TOOL_I$ after expanding the move appointment. The MSA 310 will wait for its appointment state change listener to notify it of the shift to the lot processing appointment, will find its counterpart lot processing appointment, and shift it accordingly. In this circumstance, the MSA 310 will ignore its own start time alarm. Although not shown, the lot 130, process tool 115, resources, and PMs and Quals all have corresponding

Petitioner STMICROELECTRONICS, INC.,
Ex. 1006, IPR2022-00681, Pg. 96

"processing" agents, also not shown, that are notified by the scheduling agents when significant events occur that may require processing.

In furtherance of their proactive and reactive scheduling duties, the software agents 265 maintain calendars, such as the calendar conceptually illustrated in **FIG. 4**, of scheduled "appointments." **FIG. 4** conceptually illustrates a calendar containing information concerning appointments for, *e.g.*, a process tool 115 for a number of lots 130. An "appointment" is a time period certain in which the process tool 115 has obligated itself to perform the process operation, and is defined by an Appointment Start Time ("*TS*") and an Appointment End Time ("*TE*"). In the illustrated embodiment, the appointments are booked within "**c**ommitment **w**indows" ("*CW*"), or time windows defined by an **E**arliest **S**tart **T**ime for processing ("*EST*") and a **L**atest **D**elivery **T**ime ("LDT_P"). The client lot 130 commits to arrive at the process tool 115 no later than the *EST* and the process tool 115 commits to complete the processing no later than the *LDT*. Note, however, that the use of commitment windows are not necessary to the practice of the invention.

In **FIG. 4**, the process tool 115 has booked appointments $APP_1 - APP_4$ for lots $Lot_1 - Lot_4$, respectively. Thus, the calendaring information for Lot_1-Lot_4 is as follows:

Lot_1: $APP_1[t_{10}, t_{12}]$, $CW_1[t_8, t_{14}]$

Lot_2: $APP_2[t_{13}, t_{15}]$, $CW_2[t_9, t_{16}]$

Lot_3: $APP_3[t_5, t_7]$, $CW_3[t_2, t_{11}]$

Lot_4: $APP_4[t_3, t_4]$, $CW_4[t_1, t_6]$

Note that, in the illustrated embodiment, several of the commitment windows overlap, but none of the appointments overlap. Appointments may be shifted within their commitment window, so long as they do not overlap other appointments, or may be expanded, shrunk, canceled and rescheduled as is discussed more fully below. However, in some embodiments, parts of the appointments may overlap.

Thus, returning to **FIG. 3**, appointments, *e.g.*, the processing appointment 375, are proactively booked on calendars, *e.g.*, the calendars 385, 370, maintained by each scheduling agent, *e.g.*, the scheduling agents 305, 310. Note, however, that not all appointments are processing appointments. Whenever the processing appointment 375 is booked, the LSA 305 schedules move appointments for moving the lots 130 to the location of the newly booked

Petitioner STMICROELECTRONICS, INC.,
Ex. 1006, IPR2022-00681, Pg. 97

processing appointment 375. For instance, referring to **FIG. 1** again, assume the lots 130 processing on the first process tool 115 exits from a port 140 and needs to arrive at the port 145 of the second process tool 115 for the scheduled processing appointment 375. Each LSA 305 schedules the appointments for the lot 130 to transit between the source and destination locations, *e.g.*, the port 140 of the first process tool 115 and the port 145 of the second process tool 115.

FIG. 5 conceptually illustrates three related calendars maintained for three different types of entities—a lot 130, a process tool 115, and a **p**reventive **m**aintenance ("PM")—on which different types of appointments are booked. In the illustration of **FIG. 5**, as opposed to the illustration of **FIG. 4**, all appointments for a given calendar are collapsed onto a single timeline. The commitment windows for each appointment are omitted to facilitate this collapse and to keep from unduly cluttering the illustration. More particularly, **FIG. 5** illustrates:

- a calendar for a process tool $TOOL_1$ maintained by a MSA for the process tool $TOOL_1$, including appointments booked for setups (*e.g.*, $SETUP_1$, $SETUP_2$); lot processing appointments (*e.g.*, LOT_1, LOT_2, LOT_3); PMs (*e.g.*, PM); and Quals (*e.g.*, QUAL);
- a calendar for a lot LOT_1 maintained by a LSA for the lot LOT_1 on which are booked appointments for moves (*e.g.*, $MOVE_1$, $MOVE_2$, $MOVE_3$, $MOVE_4$, $MOVE_5$) and lot processing appointments (*e.g.*, $TOOL_1$, $TOOL_2$); and
- a calendar for a PM maintained by a PMSA on which are booked appointments for PMs (*e.g.*, PM), and Quals (*e.g.*, QUAL).

Still other types of appointments may be booked. For instance, if the process tool $TOOL_1$ goes down, *i.e.*, is no longer available for processing, a "downtime appointment" may be booked on its calendar to represent the expected repair time. Note that each of these appointments in the calendar of **FIG. 5** is for an event that, in the first instance, the software agents 265 proactively schedule according to the manufacturing domain entity they represent.

An appointment, *e.g.*, the processing appointment 375 in **FIG. 3**, exists in one of several "states", or have a certain "status," at any given time. In the illustrated embodiment, the status may be:

Petitioner STMICROELECTRONICS, INC.,
Ex. 1006, IPR2022-00681, Pg. 98

- tentative—the appointment has been created, but not booked (which is discussed further below);
- unready—the tentative appointment has been booked, but is not ready for execution;
- ready—the lot 130 involved in the appointment has arrived at the process tool 115 for which it is booked;
- active—the start time for the appointment has arrived and all participants are ready;
- active PM/Qual—the start time for a following Qual portion of a PM appointment has arrived;
- processing—the scheduled activity has started, *i.e.*, the start command has been confirmed by the process tool 115, or the PM or Qual has started;
- processing PM/Qual—the follow-up Qual portion of a PM has started;
- near complete—the appointment is nearing completion as defined by predetermined parameters (*e.g.*, processing time remaining, wafer count);
- complete—processing is completed;
- canceled—booked appointment is removed from a calendar before it enters the processing status; and
- aborted—appointment was stopped during processing in a processing status.

A tentative appointment remains tentative until it is booked, whereupon it enters the unready status. The appointment is unready until the lot 130 arrives at the process tool 115. The appointment is then ready until the start time for the appointment arrives. The appointment then becomes active (*i.e.*, the appointment commences) until the process tool 115 confirms it has started processing. Once the appointment is processing, it retains that status until it nears completion and then is complete. If the appointment is removed from the calendar before entering the processing state, it is "canceled" and removed from the system. Once in the processing status, the appointment is "aborted" if halted. A completed appointment or an aborted appointment retains this status until it is removed from the system.

However, in accordance with the present invention, the software agents 265 also reactively schedule events for their respective manufacturing domain entities resulting from developments in the process flow 100. Typically, reactive scheduling by the software agents

Petitioner STMICROELECTRONICS, INC.,
Ex. 1006, IPR2022-00681, Pg. 99

265 effects changes to appointments that were, in the first instance, proactively scheduled. However, this is not necessary to the practice of the invention. For instance, in one particular embodiment, the software agents 265 schedule activities in reaction to a machine failure which causes the machine to stop processing and requires a period of downtime in order to repair the machine. There usually would not be any proactively scheduled appointment for such an event since a machine failure usually cannot be predicted in advance.

More particularly, the software agents 265 usually react to different events that occur within the process flow 100. These events are identified beforehand, *i.e.*, are "predetermined," so that appropriate activities in reaction to those events can be defined. The appropriate actions will depend on a number of factors including not only the type of manufacturing domain involved, but also the type of event that is involved. The predetermined events are categorized, in the illustrated embodiment, as one of three types: appointment state change, a factory state change, or an alarm event.

Appointment state changes usually occur when a software agent 265, *e.g.*, the scheduling agents 305, 310 change an appointment, *e.g.*, the processing appointment 375. A software agent 265 may change the status of the appointment, expand or shrink the appointment, cancel the appointment, shift the appointment, or perform other manipulations to the calendar or appointments on the calendar. When an appointment is changed, the appropriate agents 265 react to the change. For example, the MSA 310 may expand the scheduled duration of the appointment 375 on its calendar 370 due to the appointment 375 running late. The LSA 305 reacts to that change by expanding the corresponding appointment 375 on its calendar 385 to keep the appointments 375 synchronized across the two calendars 370, 385. Appointment state changes may include, for instance, appointment cancellations, appointment expansions, appointment shrinkage, appointment aborts, appointments changing status, appointments shifting, and commitment window updates.

Factory state changes usually occur when the state of the factory, *e.g.*, the process flow 100, changes. Factory state change events may originate from the MES 270 (shown in **FIG. 2**), the AMHS 280 (also shown in **FIG. 2**), or from the **E**quipment **I**nterface ("EI", not shown) for the process tools 115. Factory state changes may include lot due date changes, a lot being put on hold, changing the process or process operation of a lot, a lot's location

Petitioner STMICROELECTRONICS, INC.,
Ex. 1006, IPR2022-00681, Pg. 100

changing, a carrier arriving at a machine port, *etc.* For every factory state change that is a "predetermined event," the software agents 265 react accordingly. Exemplary factory state changes might include a downtime occurrence; a machine becoming available; a PM/Qual being detected; a chamber going down; a lot departing a machine; a move completed; and a wafer completed.

Alarm events occur, in this particular embodiment, when a specific alarm has expired. Agents react when an alarm event is received—for example, when the appointment end time has arrived for a lot appointment. If the machine agent does not receive notification that the appointment has ended, the machine agent will expand the appointment based on a configurable percentage of the appointment's total duration. Once the appointment is expanded, the machine agent will set a new alarm for the new, predicted end time of the appointment. An alarm event might be, for instance, an alarm firing for an appointment start time or an alarm firing for an appointment end time.

Note that some events are unplanned, or unexpected. For instance, there is no reliable way to actually know when a machine or chamber goes down unless it is going down for a scheduled PM or a Qual period. Some of these events are expected. For instance, the time at which a lot 130 arrives at the port 145 of the process tool 115 should be known if it arrives on time since the move was scheduled. Some embodiments may therefore choose not to schedule reactively to such an event, instead preferring to schedule proactively on the assumption the schedule will be met and scheduling reactively only if the schedule is not met. Note that other embodiments may schedule reactively to events not listed either in addition to or in lieu of those set forth herein.

The reactive scheduling performed upon the occurrence of any particular event will depend on the nature of the event and, to some degree, upon the particular implementation. Generally speaking, the reactive scheduling typically includes changing appointments, *e.g.*, the appointment 375 in **FIG. 3**, previously scheduled and booked. Booked processing appointments and PM/Qual appointments may be shifted, expanded, aborted, shrunk, canceled, and re-scheduled. Move and setup appointments are modified as needed at the time lot processing appointments are modified. In the illustrated embodiment, these appointment modifications are performed by the LSA 305 or the MSA 310.

Petitioner STMICROELECTRONICS, INC.,
Ex. 1006, IPR2022-00681, Pg. 101

For example, booked processing appointments may be shifted, which may cause booked move appointments to be canceled, aborted, or rescheduled. Appointments are viewed as "beads on a string". Existing appointments are permitted to slide backward or forward in time (*i.e.*, "right" or "left" in **FIG. 4** and **FIG. 5**) within their respective commitment windows as desired to accommodate changes in scheduling. In the illustrated embodiment, to simplify the logic, appointments are not permitted to shift past the next appointment in either direction.

Consider the circumstance where a lot processing appointment for a lot 130 completes earlier than expected. This provides an opportunity for the MSA 310 to reactively schedule what is known as an "early start." Because the MSA 310 in **FIG. 3** is idle, the MSA 310 will attempt to shift the next appointment to an earlier start time and start it immediately. When the lot 130 completes the processing appointment early, the MSA 310 reacts by shifting subsequent scheduled appointments earlier in time to take advantage of the early start opportunity. The LSA 305 will react differently to the event of the lot processing completing early.

This instance is shown in **FIG. 6A**, wherein the current time t_c falls within the commitment window CW_1 for the next appointment APP_1. The next appointment APP_1 is then shifted left, or earlier in time, so that its processing can begin immediately. If the next booked appointment cannot be shifted to start at the current time, the MSA 310 will search for any other booked appointments that may have commitment windows starting at the current time or earlier. If one of these booked appointments can be moved to start immediately without causing cancellation of any other booked appointments, the booked appointment will be moved in a "jump over" fashion and other booked appointments will be shifted as required. This scenario is shown in **FIG. 6B**, wherein the current time t_c at which the provider is idle is outside the commitment window CW_1 for the next booked appointment APP_1, but falls within the commitment window CW_3 of the third booked appointment APP_3. Hence, the third appointment APP_3 performs a "jump over" operation, jumping over appointments APP_1 and APP_2 and appointment APP_1 is shifted right to a later start time immediately following appointment APP_3.

Petitioner STMICROELECTRONICS, INC.,
Ex. 1006, IPR2022-00681, Pg. 102

In either situation, the LSAs 305 for the affected lots 130 are notified by that their appointments have been changed. The difference in start times and end times may also change the appropriateness of scheduled moves. For instance, if a booked appointment is shifted left, the earlier start time means the lot 130 must arrive earlier than may be provided for by the currently scheduled moves. Conversely, a later start time means the lot 130 should move later. In either circumstance, modified moves may be appropriate to achieve the correct arrival time for the lot 130.

Consider also the circumstance where the software agents 265 reactively schedule because the duration of a current appointment, or an appointment immediately preceding it, is longer than expected. When the LSA 305 and MSA 310 book appointments, they set an "end-time alarm" (not shown) that notifies them when the appointment is scheduled to be completed. When the task is completed, the scheduling agents 305, 310 are notified and these alarms are canceled. Thus, if the alarm fires, then the scheduling agents 305, 310 know the appointment did not complete at the scheduled time, and that the appointment needs to be expanded.

FIG. 7A and **FIG. 7B** illustrate two such situations. The timelines for the appointments in each have been collapsed and the commitment windows are omitted as was the case for the calendars in **FIG. 5**. In **FIG. 7A**, the move $MOVE_3$ had a longer duration than was expected, and so the moves $MOVE_4$, $MOVE_5$ and the appointment APP_2 were shifted later in time to accommodate this longer duration. In **FIG. 7B**, the appointment APP_3 took longer than was expected, and so the appointments APP_4 and APP_5 were shifted later in time. Note that in both **FIG. 7A** and **FIG. 7B**, the illustrated changes necessarily imply that, in both circumstances, the commitment windows for the changed appointments were wide enough to accommodate the changes. Otherwise, some appointments would have to be canceled.

As can be seen from these two examples, the reactive scheduling will vary according to the circumstance. In general, in the illustrated embodiment, the following scheduling activities may occur responsive to a predetermined event:

- aborting a scheduled appointment in progress;
- canceling a scheduled appointment before it begins;

Petitioner STMICROELECTRONICS, INC.,
Ex. 1006, IPR2022-00681, Pg. 103

- scheduling a new appointment;
- starting a scheduled appointment;
- expanding the duration of a scheduled appointment;
- shrinking the duration of a scheduled appointment;
- shifting a scheduled appointment to an earlier or later time;
- changing a commitment window;
- changing an appointment attribute (*e.g.*, transport start time, remaining transport time, *etc.*);
- setting an alarm;
- canceling an alarm; and
- changing the status of an appointment.

The "predetermined events" provoking such reactive scheduling may include, for an appointment state change:

- canceling an appointment;
- expanding an appointment;
- shrinking an appointment;
- aborting an appointment;
- an appointment changing status;
- shifting an appointment;
- an unexpected carrier arrival;
- a transport time update;
- a load time update;
- an unload time update;
- a lot joining a batch;
- a lot leaving a batch;
- canceling a lot from a batch; and
- updating a commitment window.

For a factory state change, the predetermined event might be, for example:

- detection of downtime;
- a machine becoming available;
- a PM/Qual being detected;

Petitioner STMICROELECTRONICS, INC.,
Ex. 1006, IPR2022-00681, Pg. 104

- a chamber going down or coming up;
- a change in machine capabilities;
- a change in machine types;
- addition of a process;
- addition of a process operation;
- a lot process changed;
- a lot placed on hold;
- a lot relesed from hold;
- a lot priority changed;
- a lot due date changed;
- a lot wafer count changed;
- a lot process operation changed,and
- a lot departing from or arriving at a machine.

And, for an alarm event, the predetermined event might be:

- an alarm firing for an appointment start time; and
- an alarm firing for an appointment end time.

Note that these lists are not exhaustive, but illustrative only. The identity of predetermined events will be implementation-specific, and so may vary among embodiments. Typically, depending on the event provoking the reactive scheduling, these activities will be employed in combination, or in the alternative, conditionally. Tables 2-5 list the predetermined events, their type, and their reactive scheduling activities for machine, lot, PM, and resource scheduling agents, respectively, for one particular implementation of the present invention.

Tables 2, Table 3, and Table 5 refer one or more of load/unload operations and appointments and charge/discharge operations and appointments. As will be appreciated by those skilled in the art having the benefit of this disclosure, some process tools 115 perform lot batch process operations in which multiple lots 130 are simultaneously processed in a batch. Some of these process tools 115 use load, charge, discharge and unload steps. For instance, a process tool 115 may first load all the batch participants, *i.e.*, lots 130, from the tool I/O ports (not shown) to the tool internal stocker (also not shown). Usually this type of process tool 115 has multiple I/O ports, and the load/unload operations are also performed in batches. After all the batch participants are loaded, the process tool 115 performs a batch

Petitioner STMICROELECTRONICS, INC.,
Ex. 1006, IPR2022-00681, Pg. 105

charge operation to move the batch participants from the internal stocker into, *e.g.*, a furnace tube (not shown) before the processing can actually begin. After the process tool 115 completes the batch process operation, it discharges the batch participants, *e.g.*, from the furnace tube back into the internal stocker. Finally when the lots 130 are ready to be moved to the tool I/O ports, a sequence of batch unload operations is performed.

Table 2 also refers to appointments that are "locked." To help prevent undesirable appointment shifting, the illustrated embodiment employs an appointment locking mechanism. Generally speaking, when a lot 130 starts its final move from a source location to a process tool 115, it is undesirable to have a new appointment jumping in front of it by canceling or shifting that appointment to the right, or later in time. To prevent this from occurring, the MSA "locks" the lot processing appointment when the lot 130 starts its final move. Note that locked appointments nevertheless sometimes do need to be shifted. For instance, assume two appointments are booked on the calendar for a particular process tool 115, and the first one is processing while the lot 130 for the second one has started the final move to the process tool 115. The second appointment is locked because it is in its "final" move to the process tool 115. If the first appointment runs long and must be expanded, the second one must first be shifted to permit the first one to expand. Thus, the locked second appointment must be shifted even though this is generally undesirable. In general, however, appointments may be "locked" in certain circumstances to prevent them from being shifted or canceled.

Table 2. Reactive Scheduling Activities for MSAs

Event	Event Type	Reactive Scheduling Activities

Petitioner STMICROELECTRONICS, INC.,
Ex. 1006, IPR2022-00681, Pg. 106

Event	Event Type	Reactive Scheduling Activities
Downtime Detected	Factory State Change (MES)	A downtime event may indicate the machine is currently not available for processing or that an error has occurred during processing. If the MSA detects that the machine is not currently available for processing, the MSA will abort and shrink any lot processing appointment that is processing. It will then book a downtime appointment after the aborted lot processing appointment or after the unload appointment. If the downtime event occurred due to an error during processing, the MSA will book a downtime appointment after the lot processing appointment that is processing or the unload appointment. Booked processing appointments overlapping the downtime appointment are shifted later in time, if possible, or are otherwise cancelled.
Machine Available Detected	Factory State Change (MES)	Any active PM, QUAL, or downtime appointments are completed. The next appointment on the machine's calendar is then shifted and started, if possible.
PM/Qual Detected	Factory State Change (MES)	A PM/Qual appointment is booked after any active appointments. Any booked appointments overlapping the PM/Qual appointment are shifted after the PM/Qual appointment. If any overlapping booked appointment cannot shift, it is cancelled.
Chamber Down Detected	Factory State Change (MES)	All unready appointments for the machine or chamber that has not started are canceled.
Chamber Up Detected	Factory State Change (MES)	The duration for any appointment is shrunken to the expected completion time based on the new throughput rate and shifted to the right, or later in time, if possible.
Lot Not At a Port At a Scheduled Start Time	Alarm State Change	If the lot has "reserved" a port with the machine, the MSA will wait until the LSA expands the move appointment. The expansion of the move appointment will cause the LSA to shift the lot appointment to the right. The MSA will then react appropriately to the shifting of the lot appointment. If the lot has not reserved the port, the appointment is cancelled.

Petitioner STMICROELECTRONICS, INC.,
Ex. 1006, IPR2022-00681, Pg. 107

Event	Event Type	Reactive Scheduling Activities
Lot Arrived at Machine Port	Factory State Change (EI)	If the lot arrived at the right location, the MSA will make the appointment active if it is not a participant of a batch appointment. If the appointment is a participant of a batch appointment, the MSA will make the appointment ready. If the machine is idle and the appointment is active, the MSA will start processing the appointment. (Note: a participant of a batch appointment is made active when all of the participants have arrived at the machine.) If the lot arrived at the right machine but the wrong port, the MSA will check to see if a different lot reserved the port. If a different lot reserved the port, the MSA will assign that lot the next available port. If the appointment for the arriving lot is active, the MSA will start processing the appointment. If the lot arrived at the wrong machine, the MSA will check to see if a different lot reserved the port. If a different lot reserved the port, the MSA will assign that lot the next available port. The machine will then book an appointment for the lot just arrived. Any overlapping appointments will be shifted to a later time. If an overlapping appointment cannot shift later in time, it will be cancelled.
Lot Processing Appointment Running Late	Alarm State Change	If a lot processing appointment is running late, it is expanded and any overlapping booked appointments are shifted to the right, or later in time. If any overlapping booked appointment cannot shift right and the appointment is not locked, it is cancelled. If the appointment is locked and cannot shift right, the appointment's commitment window will be expanded to allow the shift to occur.
Lot Processing Completing Early	Factory State Change (EI)	If a lot processing appointment completes earlier than expected, the appointment is shrunk and completed and, if possible, the next appointment is shifted earlier in time. If the next appointment can shift to the current time, it will start that appointment.
Lot Processing Near Complete Detected	Factory State Change (EI)	The MSA calculates the remaining processing time for the lot. If it is going to finish early, the appointment is shrunken to the new end time and any following appointments are shifted left, or earlier in time. If it is going to finish late, the appointment is expanded to the new end time and any overlapping appointment are shifted to a later time or cancelled.
Lot Appointment Cancelled	Appointment State Change	If processing or near complete, the appointment is aborted or, if unready, simply canceled. Upon cancellation of an appointment, the next appointment is shifted earlier in time, if possible, to reduce any gaps between appointments.
Lot Departing Machine Port	Factory State Change (EI)	If the lot was still processing at the time of its departure, the appointment is aborted and the end time shifted earlier in time. The next appointment is shifted earlier as much as possible.

Petitioner STMICROELECTRONICS, INC.,
Ex. 1006, IPR2022-00681, Pg. 108

Event	Event Type	Reactive Scheduling Activities
Shift Appointment Right	Appointment State Change	The appointment is shifted right. If it cannot be shifted right, it is canceled, unless it is locked. If it is locked, any appointment blocking the right shift are cancelled

Table 3 refers to "feeder operations." In a partially automated fab, only a portion of the process operations may be scheduled and controlled by the software agents 265. Thus, only a subset of the process tools 115 in the fab are under the control of the software agents 265 and the fab is not fully under the control of this system. Those process operations controlled by the software agents 265 are called "control process operations." Immediately before each control process operation, a sequence of "feeder" operations can be derived from a configurable percentage of the process time of the controlled process operation. Feeder appointments are used in determining the earliest start time for an appointment being scheduled ahead. More particularly, feeder appointments are used when a LSA is scheduling ahead and the time has not yet arrived for scheduling the feeder operation with an actual process tool 115. Feeder appointments are used to represent processing activities for those feeder operations with the duration equal to the cycle time of the respective feeder operations.

Table 3 also refers to "maxMove" appointments. For a feeder operation, the specific process tool 115 that will perform the final feeder operation is not known until the lot 130 begins processing at the final feeder operation. A "maximum move" appointment represents transport activities from the last feeder process tool 115 to a controlled process tool 115. In one embodiment, the duration of the maximum move appointment is derived by the worst case transport time between the last feeder process tool station 105 and the controlled process tool station 105. When the last feeder appointment is activated, the actual process tool 115 performing the last feeder operation is known, and thus the maximum move appointment will be replaced by a move appointment or a sequence of move appointments.

Table 3 furthermore refers to a "bid request." In the illustrated embodiment, the process flow 100 employs a protocol for scheduling appointments that begins with a "bid request." The LSA 305 publishes a "request bid" message to a capable MSA 310. The MSA 310 submits one or more bids to the LSA 305. The LSA 305 selects one from among several such bids, which typically results in one or more "appointments" associated with performing the operation the LSA 305 is seeking for its lot 130 of wafers 135. Note, however, that other

Petitioner STMICROELECTRONICS, INC.,
Ex. 1006, IPR2022-00681, Pg. 109

protocols may be employed in which there is no "bid request." Thus, the bid request is an implementation specific feature that may not be found in all embodiments.

Table 3. Reactive Scheduling Activities for LSAs

Event	Event Type	Reactive Scheduling Activities
Appointment End Time Alarm Fired For Move Appointment	Alarm Event	The alarm indicates that the scheduled end time of the move appointment has arrived. The LSA determines if the move appointment should be expanded. If the move originates from a machine port, move appointment expansion is always permitted to clear the port. Otherwise, the move appointment is expanded a percentage (*i.e.*, 25%) of the originally scheduled duration until a maximum expansion percentage has been reached (*i.e.*, 175%). When the maximum expansion percentage has been reached, the appointment is aborted. If the move appointment is expanded, subsequent booked appointments are shifted later in time. A new end time alarm is then set for the expanded move appointment.
Appointment End Time Alarm Fired For Feeder Appointment	Alarm Event	The alarm indicates that the scheduled end time of the feeder appointment has arrived. The LSA will expand the appointment by a configurable percentage. Any subsequent feeder appointments (if any) will be shrunk by the amount that this feeder appointment expanded (can't shrink a feeder duration to be less than the process time for the operation). As a last resort, appointments after the final feeder appointment will be shifted to a later time.
Appointment Start Time Arrived For Move Appointment	Alarm Event	This alarm indicates that the scheduled start time of the specified move appointment has occurred. The LSA will make the appointment active if it is not active and the AMHS move will be initiated. If the appointment is the final move before a lot appointment, the LSA will ask a MSA to reserve a port and lock the appointment. It will also appropriately update the total transport time and remaining transport time. The LSA will then create an appointment end time alarm.
Appointment Start Time Arrived For Feeder Appointment:	Alarm Event	This alarm indicates that the scheduled start time of the specified feeder appointment has occurred. The LSA will make the appointment active if it is not active. The LSA will then create an appointment end time alarm.
Lot Appointment	Appointment	The LSA cancels the lot appointment and any non-

Petitioner STMICROELECTRONICS, INC.,
Ex. 1006, IPR2022-00681, Pg. 110

Event	Event Type	Reactive Scheduling Activities
Cancelled	State Change	active moves associated with the lot appointment. It will also cancel all load and unload appointments associated with the lot appointment and appropriately cancel any alarms as necessary. The LSA then reschedules the cancelled appointment(s).
Expand Lot Appointment	Appointment State Change	The MSA initiates this change when the lot appointment is running long. The LSA will react to this change by shifting all appointments to the right, or later in time, after the lot processing appointment being expanded. It will then expand the lot appointment to the specified time.
Make Lot Appointment Aborted	Appointment State Change	The MSA initiates this change when the processing of the lot has been interrupted. The LSA will change the status of the appointment to aborted, put the lot on hold, and schedule a move appointment to a sorter or a stocker after canceling all appointments.
Make Unload Appointment Aborted	Appointment State Change	The LSA will change the status of the unload appointment to aborted.
Make Load Appointment Aborted	Appointment State Change	The LSA will change the status of the load appointment to aborted.
Make Lot Appointment Processing	Appointment State Change	The MSA initiates this change when the processing of the lot has started. The LSA will change appointment to the processing status, inform the lot processing agent to start processing the appointment.
Make Load Appointment Processing	Appointment State Change	The LSA will change appointment to the processing status, and inform the lot processing agent.
Make Unload Appointment Processing	Appointment State Change	The LSA will change appointment to the processing status, and inform the lot processing agent .
Make Lot Appointment Completed	Appointment State Change	The MSA initiates this change when the lot has completed processing and may shrink the appointment if appropriate. The LSA will notify the processing agent, change the status to completed, ensure that a post control move appointment has been scheduled, and, if not, it will create one. It initiates the next appointment.
Make Load Appointment Completed	Appointment State Change	The LSA will notify the processing agent and change the status to completed. It initiates the next appointment.
Make Unload Appointment Completed	Appointment State Change	The LSA will notify the processing agent and change the status to completed. It initiates the next appointment.
Make Move Appointment	Appointment State Change	The LSA will make the appointment completed and may shrink the appointment if appropriate. It will

Petitioner STMICROELECTRONICS, INC.,
Ex. 1006, IPR2022-00681, Pg. 111

Event	Event Type	Reactive Scheduling Activities
Completed		also cancel the end time alarm, appropriately updates the transport start time, and initiates the next appointment.
Make Lot Appointment Near Complete	Appointment State Change	The MSA initiates this change when it receives an equipment event stating that the lot processing is near complete. The LSA will change the status of the appointment to near complete. It will then schedule the post control move appointment and invokes scheduling for the next process operation if appropriate.
Shift Lot Appointment Left	Appointment State Change	The LSA will try to move the lot appointment to the left, or earlier in time. If it is unable to shift left, the system will cancel all non-active move, load, and unload appointments and then cancels the lot appointment.
Shift Load Appointment Left	Appointment State Change	The LSA will try to move the load appointment to the left. If it is unable to shift left, the system will cancel all non-active move appointments, cancels unload/load appointments, cancels the lot appointment.
Shift Unload Appointment Left	Appointment State Change	The LSA will try to move the unload appointment to the left. If it is unable to shift left, the system will cancel all non-active move appointments, cancels unload/load appointments, and cancels the lot appointment.
Shift Lot Appointment Right	Appointment State Change	The LSA will check to see if the first appointment is a move appointment. If it is a move appointment and it is not active or on a machine or machine port, it will shift that move appointment to make it arrive at the start of the lot appointment or load appointment (if the move appointment is active, it will expand the end to the start of the lot appointment or load appointment). It will then shift any preceding appointments to the right. If the system is unable to shift the appointments right, it will cancel all non-active move appointments, any load/unload appointment, and the lot appointment.
Shift Load Appointment Right	Appointment State Change	The LSA will check to see if the previous appointment is a move appointment. If it is a move appointment and it is not active or on a machine or machine port, it will shift that move appointment to make it arrive at the start of the load appointment (if the move appointment is active, it will expand the end to the start of the load appointment). It will then shift any preceding appointments to the right. If the system is unable to shift the appointments right, it will cancel all non-active move appointments, any

Petitioner STMICROELECTRONICS, INC.,
Ex. 1006, IPR2022-00681, Pg. 112

Event	Event Type	Reactive Scheduling Activities
		load/unload appointments, and the lot appointment.
Shift Unload Appointment Right	Appointment State Change	The LSA will shift appointments to the right. If the system is unable to shift the appointments right, it will cancel the lot appointment, which will cancel all move, load, and unload appointments association with the lot appointment.
Shrink Lot Appointment	Appointment State Change	The LSA will shrink the lot appointment to the specified time and shift subsequent move appointments earlier in time.
Shrink Load Appointment	Appointment State Change	The LSA will shrink the load appointment to the specified time.
Shrink Unload Appointment	Appointment State Change	The LSA will shrink the unload appointment to the specified time.
Unscheduled Move Completed	Factory State Change (AMHS)	If the current location of the lot is a machine port, then the system will cancel all appointments except the lot appointment. The lot appointment will only be cancelled if the appointment was for a different machine. If the appointment was for a different machine, the LSA will cancel all appointments and wait for the MSA to invoke override scheduling. Otherwise, the system will determine how long it will take for the lot to get back to the next processing appointment destination. If the lot can still make its processing start time, then the system will reschedule the appropriate move appointments. If the lot is unable to make the start time, it will cancel all move, load, unload, and lot appointments and will initiate scheduling.
Update Commitment Window For Lot Appointment	Appointment State Change	The LSA will update the lot appointment commitment window appropriately. The commitment window represents the lots earliest start time and latest delivery time for a given appointment. The commitment window is updated if an appointment is processing late and the new end time exceeds the latest delivery time of the appointment.
Update Load Time For Load Appointment	Appointment State Change	The LSA will update the load start time and remaining load time appropriately on the load appointment.
Wrong Move Completed	Appointment State Change	If the current location of the lot is a machine port, then the system will cancel all appointments except for the lot appointment. The lot appointment will only be cancelled if the appointment was for a different machine. If the appointment was for a different machine, the LSA will cancel all appointments and wait for the MSA to invoke override scheduling. Otherwise, the system will

Petitioner STMICROELECTRONICS, INC.,
Ex. 1006, IPR2022-00681, Pg. 113

Event	Event Type	Reactive Scheduling Activities
		determine how long it will take for the lot to get back to the next processing appointment destination. If the lot can still make its original processing start time, then the system will reschedule the appropriate move appointments. If the lot is unable to make the start time, it will cancel all move, load, unload, and lot appointments and will initiate scheduling.
Lot Due Date Change	Factory State Change (MES)	If the lot has a processing appointment active, cancel appointments after either current appointment or following unload appointment (if present). If the appointment is in "near complete" status and the next process operation is not a control operation or there is no next operation in the process, schedule a move appointment after the current lot processing appointment. Otherwise, attempt to schedule the next process operation. If the lot has a move appointment active and the move is to a machine port destination, cancel appointments after the following load appointment (if present) and following lot processing appointment. Otherwise, cancel all appointments after the move appointment and reschedule the current process operation. If the lot has a feeder appointment active, cancel all appointments after the feeder appointment and reschedule the next process operation. If the lot has a load appointment active, cancel appointments after the following lot appointment or load appointment (if present.) If the lot has an unload appointment active, cancel appointments after the current time. If the next operation is not a control operation or there are no more operations, schedule a move appointment after the unload appointment. Reschedule for the next process operation. If no appointments are active, cancel all future appointments and reschedule current process operation.
Lot put on Hold	Factory State Change (MES)	If lot is processing, cancel appointment after post move appointment. If lot is moving to control machine port, cancel all appointments after the move and schedule a move to the nearest stocker as soon as the lot arrives at the machine port. If unload appointment is processing, cancel all appointments after and schedule post move. If feeder appointment is processing, shrinks and aborts the appointment and

Petitioner STMICROELECTRONICS, INC.,
Ex. 1006, IPR2022-00681, Pg. 114

Event	Event Type	Reactive Scheduling Activities
		then cancels all appointments after feeder appointment. If load appointment is processing, it cancels all appointments after except for the unload appointment. It will then schedule a post move appointment. If the lot has a processing appointment active, and it is in a status of processing or near complete, it is allowed to complete. If the next appointment is an unload appointment, all subsequent appointments are cancelled and a move is scheduled after the unload. If the next appointment is a move appointment, it and subsequent appointments are cancelled and another move is scheduled. If there are no subsequent appointments, a move is scheduled after the processing appointment. If the lot appointment is active but not processing or complete, it is shrunk and aborted. If the next appointment is an unload appointment, subsequent appointments are cancelled and a move appointment is scheduled. If the next appointment is a move appointment, it is cancelled and another move appointment is scheduled. If there are no next appointments, a move appointment is scheduled. If the lot is in a feeder appointment, it is shrunk and aborted and all subsequent appointments cancelled. If the lot is in a load appointment and it is in a processing status, the subsequent lot processing appointment is cancelled. The following unload appointment is left and all subsequent appointments cancelled. A move appointment is scheduled after the unload appointment (both will later shift earlier in reaction to appointment changes initiated by the RSA). If the load appointment is not processing, it and subsequent appointments are cancelled and a move appointment is scheduled. If the lot is in an unload appointment, all subsequent appointments are cancelled and a move appointment is scheduled after the unload appointment. If the lot is in a move appointment and the move has started, all subsequent appointments are cancelled. If the move is to a machine port, a move is scheduled to subsequently transport the lot off the machine port.

Petitioner STMICROELECTRONICS, INC.,
Ex. 1006, IPR2022-00681, Pg. 115

Event	Event Type	Reactive Scheduling Activities
		If the lot is on a move appointment that has not started, the move appointment is aborted and all subsequent appointments cancelled.
Process Changed	Factory State Change (MES)	If the lot has a processing appointment active, cancel appointments after either current appointment or following unload appointment (if present). If the appointment is in "near complete" status and the next process operation is not a control operation or there is no next operation in the process, schedule a move appointment after the current lot processing appointment. If the appointment is near complete and the next operation is a control operation, attempt to schedule the next process operation. If the lot has a move appointment active and the move is to a machine port destination, cancel appointments after the following load and unload appointments (if present) and following lot processing appointment. Otherwise, cancel all appointments after the move appointment and reschedule the current process operation. If the lot has a feeder appointment active, cancel all appointments after the feeder appointment and reschedule the next process operation as well as any preceding feeder appointments. If the lot has a load appointment active, cancel appointments after the following unload appointment. If the lot has an unload appointment active, cancel appointments after the current time. If the next operation is not a control operation or there are no more operations, schedule a move appointment after the unload appointment. Reschedule for the next process operation. If no appointments are active, cancel all future appointments and reschedule current process operation.
Process Operation Changed	Factory State Change (MES)	The LSA will remove all non-active appointments. The LSA will then check to see if the new process operation is a control or feeder process operation. If the process operation is a feeder, then the agent will schedule the next process operation. If the process operation is a control and the agent doesn't have an appointment for this process operation, it will schedule this process operation.

Petitioner STMICROELECTRONICS, INC.,
Ex. 1006, IPR2022-00681, Pg. 116

Event	Event Type	Reactive Scheduling Activities
		If the lot has a processing appointment active, cancel appointments after either current appointment or following unload appointment (if present). If the appointment is in "near complete" status and the next process operation is not a control operation or there is no next operation in the process, schedule a move appointment after the current lot processing appointment. If the appointment is near complete and the next operation is a control operation, attempt to schedule the next process operation. If the lot has a move appointment active and the move is to a machine port destination, cancel appointments after the following load and unload appointments (if present) and following lot processing appointment. Otherwise, cancel all appointments after the move appointment and reschedule the current process operation. If the lot has a feeder appointment active, cancel all appointments after the feeder appointment and reschedule the next process operation as well as preceding feeder appointments. If the lot has a load appointment active, cancel appointments after the following unload appointment. If the lot has an unload appointment active, cancel appointments after the current time. If the next operation is not a control operation or there are no more operations, schedule a move appointment after the unload appointment. Reschedule for the next process operation. If no appointments are active, cancel all future appointments and reschedule current process operation.
Wafer Count Decreased	Factory State Change (MES)	If the wafer count for a lot decreases, the MSA shrinks lot appointments on its calendar that have not yet started. The MSA will try to shrink the appointment by the proper amount. The MSA cancels any unstarted lot appoitment that cannot be shrunk. The LSA subsequently reacts to the appointment changes made by the MSA, depending on the what the changes are.
Wafer Count Increased	Factory State Change (MES)	If the wafer count for a lot increases, the MSA expands lot appointments on its calendar that have not yet started. The MSA will try to expand the appointment by the proper amount. The MSA

Petitioner STMICROELECTRONICS, INC.,
Ex. 1006, IPR2022-00681, Pg. 117

Event	Event Type	Reactive Scheduling Activities
		cancels any unstarted lot appointment that cannot be expanded. The LSA subsequently reacts to the appointment changes made by the MSA, depending on the what the changes are.
Lot Terminated	Factory State Change (MES)	The system will cancel all appointments for the lot.
Lot Moved In	Factory State Change(MES)	If the lot moves in to a feeder operation that is not the first feeder operation of the segment, the LSA will adjust the appointment's end time to equal the current time plus the process time for that operation. It will then set an end time alarm. If the feeder operation is the last feeder, the LSA will replace the max move appointment with an appropriate move appointment and updates the remaining transport time.
Lot Moved Out	Factory State Change	If the operation that the lot changed from is a feeder operation, the LSA will completely shrink the feeder appointment and cancel subsequent feeder and maxMove appointments, and schedule the next operation and any preceding feeder appointments. If the operation that the lot changed from is a control operation, no action is taken (next operation would have been scheduled at near completion). If the operation the lot changed from is a normal (not control or feeder) operation, the LSA will schedule the operation to which the lot changed.
Experimental Request Form ("ERF") Status Change	Factory State Change (MES)	An ERF includes special instructions on how to process a particular lot. An ERF may be attached to or removed from a lot, and the LSA is notified when this happens. The LSA will notify each lot processing appointment's MSA and subsequently react to appointment state changes (if lot no longer compatible with any future batch appointments in which it may be participating).
Override Lot Appointment	Factory State Change	A bid request and an appointment change listener are created and returned to the MSA. (This is in response to an unscheduled lot being placed on a machine port.)
Machine Advertises a Time Slot	Appointment State Change	LSA will determine if it can improve its processing appointment for the operation at the new time slot. If so, then the LSA cancel the appointment and publishes a submit bid message in attempt to reschedule the appointment for the advertised time slot.

Petitioner STMICROELECTRONICS, INC.,
Ex. 1006, IPR2022-00681, Pg. 118

Table 4. Reactive Scheduling Activities for PM Scheduling Agents

Event	Event Type	Reactive Scheduling Activities
PM/Qual Appointment Cancelled	Appointment State Change	The PM appointment is canceled and rescheduled.
Expand PM/Qual Appointment	Appointment State Change	The MSA initiates this change when the PM appointment is running long. The PMSA will react to this change by shifting all appointments to the right of the PM processing appointment being expanded. The appointments that cannot be shifted are canceled and rescheduled. It will then expand the PM appointment to the specified time.
Make PM/Qual Appointment Aborted	Appointment State Change	The MSA initiates this change when the processing of the PM has been interrupted. The MSA will change the status of the appointment to aborted. The PMSA will reschedule the appointment.
Make PM/Qual Appointment Processing	Appointment State Change	The MSA initiates this change when the MSA learns the PM has started. The MSA will change appointment to a processing status.
Make PM/Qual Appointment Completed	Appointment State Change	The MSA initiates this change when the PM has completed processing and may shrink the appointment if appropriate. The PMSA will notify the processing agent, change the status to completed, and update the last occurrence of the PM with the current wafer count on the machine or current time.
Make PM Appointment Active PM/Qual	Appointment State Change	The MSA initiates this change when it is time for the following Qual to start. The PMSA will change the status of the appointment to "active".
Make PM Appointment Processing PM/Qual	Appointment State Change	The MSA initiates this change when it receives a Factory State Change indicating the Qual portion of the PM appointment has started. The PMSA will change the status of the appointment to processing PM/Qual.
Shift PM/Qual Appointment Left	Appointment State Change	The PMSA will try to move the PM appointment to the left. If it is unable to shift left, the system will cancel the appointment and reschedule it.
Shift PM/Qual Appointment Right	Appointment State Change	The PMSA will try to move the PM appointment to the right. If it is unable to shift right, the system will cancel the appointment and reschedule it.
Shrink PM/Qual Appointment	Appointment State Change	The PMSA will shrink the PM appointment to the specified time.
Update Commitment	Appointment State	The PM appointment commitment window is

Petitioner STMICROELECTRONICS, INC.,
Ex. 1006, IPR2022-00681, Pg. 119

Event	Event Type	Reactive Scheduling Activities
Window For PM/Qual Appointment	Change	updated. The commitment window represents the PMs earliest start time and latest delivery time for a given appointment.
Override PM/Qual Appointment	Appointment State Change	The PM appointment is cancelled within the calendar if it exist. It will then create a bid request and appointment change listener and return it to the MSA. This is in response to an unscheduled PM being started.
MES Machine Event Detected	Factory State Change	The PMSA will appropriately update the number of occurrences of the event within any PM or Qual that depends on this event. It will then schedule any PMs or Quals triggered by the event occurrence what are not currently scheduled on its calendar.
Lot Processing Completed on Machine	Factory State Change	The PMSA will reevaluate the commitment windows for all PMs or Quals that are scheduled based on a count of material processed. If the commitment window is invalid, the PMSA will either update the commitment window if the PM or Qual is scheduled within the new window, or it will cancel the existing appointment and reschedule within the new window. It will also schedule any PMs or Quals based on a count of material processed that have reached their trigger point and have not been schedule previously.
Alarm Fired	Alarm Event	The PMSA will schedule any time-based PM or Qual that has reached its trigger point and was not previously scheduled.

Table 5. Reactive Scheduling Activities for Resource Scheduling Agents

Event	Event Type	Reactive Scheduling Activities
Appointment Start Time Alarm Fired for Load (Unload) Appointment	Alarm Event	This alarm indicates that the scheduled start time of the specified load (unload) appointment has arrived. The resource appointment scheduler will make the appointment active if it is not active. It will also create an appointment end time alarm if needed. The resource appointment scheduler will inform the processing agent to start processing the appointment.
Appointment Start Time Alarm Fired for Discharge Appointment	Alarm Event	This alarm indicates that the scheduled start time of the specified discharge appointment has arrived. The resource appointment scheduler will make the appointment active if it is not active. It

Petitioner STMICROELECTRONICS, INC.,
Ex. 1006, IPR2022-00681, Pg. 120

Event	Event Type	Reactive Scheduling Activities
		will also create an appointment end time alarm if needed. The resource appointment scheduler will inform the processing agent to start processing the appointment.
Appointment End Time Alarm Fired for Load (Unload) Appointment	Alarm Event	This alarm indicates that the scheduled end time of the specified load (unload) appointment has arrived. The resource appointment scheduler will expand the appointment with a percentage (*e.g.*, 25%) of the originally scheduled duration until a maximum expansion percentage has been reached (*e.g.*, 175%). Before expanding the appointment, the subsequent booked appointments may be shifted later in time. A new end time alarm is then set for the expanded load (unload) appointment.
Appointment End Time Alarm Fired for Charge Appointment	Alarm Event	This alarm indicates that the scheduled end time of the specified charge appointment has arrived. The resource appointment scheduler will expand the appointment with a percentage (*i.e.*, 25%) of the originally scheduled duration until a maximum expansion percentage has been reached (*i.e.*, 175%). Before expanding the appointment, the subsequent booked appointments may be shifted later in time. A new end time alarm is then set for the expanded charge appointment.
Machine Batch Appointment Changes Its Status to Active	Appointment State Change	The MSA initiates this change when the start time for the corresponding machine batch appointment has arrived. The RSA will change the corresponding appointment status of the current charge appointment to active, and a new end time alarm is set for the activated charge appointment.
Machine Batch Appointment Changes Its State to Processing	Appointment State Change	The MSA initiates this change when the machine batch appointment was actually started. The charge appointment will still have the active status.
Machine Batch Appointment Changes Its State to Completed	Appointment State Change	The MSA initiates this change when the processing of the corresponding machine batch appointment was actually completed. The RSA will change the appointment state of the corresponding discharge appointment to the completed status.
Lot Load (Unload) Appointment Shifted to Later Time	Appointment State Change	The LSA initiates this change when a lot load appointment was shifted to a later time. The RSA will rearrange its corresponding load appointments, and shift other appointments on its calendar if necessary. If the appointment has a start time alarm, the alarm update will be performed.

Petitioner STMICROELECTRONICS, INC.,
Ex. 1006, IPR2022-00681, Pg. 121

Event	Event Type	Reactive Scheduling Activities
Machine Batch Appointment Shifted Right to Later Time	Appointment State Change	The MSA initiates this change or responding the change from the lot scheduling calendar when a machine batch appointment was shifted to later time. The RSA will shift the corresponding charge and discharge appointment to later time. Other appointments on its calendar may also get shifted.
Machine Batch Appointment Shrunk	Appointment State Change	The MSA initiates this change when a machine batch appointment was shrunk. If the discharge appointment is not activated, the RSA will shift the corresponding discharge appointment to earlier time, otherwise it will shrink the discharge appointment. The start time alarm or end time alarm for the discharge appointment may need to be updated.
Machine Batch Appointment Expanded	Appointment State Change	The MSA initiates this change when a machine batch appointment was expanded. If the discharge appointment is not activated, the RSA will shift the corresponding discharge appointment to later time, other wise it will expand the discharge appointment. The start time alarm or end time alarm for the discharge appointment may need to be updated.
Load Start	Factory State Change (EI)	The equipment interface ("EI") notifies the RSA that a load has started. The RSA reacts depending on whether the lots that were loaded were expected or unexpected. If all the lot are expected, but loading order is different from the appointments on the calendar, the RSA will rearrange its load appointment and their participants.
Carrier Arrived	Factory State Change	The EI notifies the RSA that a carrier has arrived. If it carries the expected lot, the RSA will change the corresponding resource load lot appointment state to the ready status.
Load Update	Factory State Change	Upon notification by the EI, if the corresponding load appointment is not the first one in the batch job, the RSA will first shrink the previous load appointment, and pull the follow-up load appointment to earlier start time, the appointment state of the previous load appointment will be changed to the completed status. The end time alarm for the previous load appointment will be cancelled. The PMSA will change the next load appointments status to active.
Load Completed	Factory State Change	Upon notification by the EI that a load has completed, the RSA will shrink the corresponding load appointment, cancel the end time alarm and

Petitioner STMICROELECTRONICS, INC.,
Ex. 1006, IPR2022-00681, Pg. 122

Event	Event Type	Reactive Scheduling Activities
		change the appointment state of the last load appointment to the completed status.
Charge Started	EI Event	Upon notification from the EI that charging has started, the RSA will change the charge appointment state to the processing status.
Charge Completed	EI Event	Upon notification from the EI that a charge is complete, the RSA will shrink the charge appointment, cancel the end time alarm, and change the charge appointment state to the completed status. If there are some follow-up unload appointments, it will pull the unload appointments to earlier start time, and start the unload appointment.
Discharge Started	EI Event	Upon notification from the EI that a discharge has started, the RSA will change the discharge appointment state to the processing status.
Unload Started	EI Event	Upon notification from the EI that unloading has started, the RSA will change the first unload appointment state to the processing status.
Unload Update	EI Event	Upon notification from the EI, an unload appointment is updated. If the corresponding unload appointment is not the last one in the unload start event, the RSA will shrink the corresponding unload appointment, cancel its end time alarm and change its status to the completed status. The RSA will then pull the next unload appointment to earlier time and start processing the next unload appointment. If the corresponding unload appointment is the last one in the unload start event, the RSA will wait for unload completed event.
Unload Completed	EI Event	Upon notification from the EI that an unload has completed, the RSA will shrink the unload appointment, cancel its end time alarm and change the appointment state to the completed status.
Unexpected Unload Started	EI Event	Upon notification from the EI that an unload has unexpectedly started (*i.e.*, the next appointment is not an unload appointment or the transfer sequence is different from the scheduled one) the RSA will change the scheduled unload appointments, and make the first one active. Overlapping appointment may get shifted to later time or cancelled.
Unexpected Load Started	EI Event	Upon notification from the EI that a load has unexpectedly started (*i.e.*, the next appointment is not a load appointment or the transfer sequence is different from the scheduled one), if there is a lot

Petitioner STMICROELECTRONICS, INC.,
Ex. 1006, IPR2022-00681, Pg. 123

Event	Event Type	Reactive Scheduling Activities
		in the list that is not one of the participant of the next charge appointment, the RSA passes a lot list and batch ID to a MSA for appropriate response. If all the lots are in the next charge appointment, but the transfer sequence is different from the schedule appointments, the RSA will reschedule the load appointments.

Note that, as booked appointments are shifted, canceled, shrunk, expanded, and rescheduled, the changes can ripple through the process flow and, in particular, the calendars. Changes are instituted by a single software agent, but a changed appointment may be booked on multiple calendars. The changes must consequently be communicated to the other software agents so they can update their calendars respectively. This is true also of other types of events in the process flow.

In the illustrated embodiment, the invention is implemented using object oriented programming ("OOP") techniques, although the invention may be implemented using techniques that are not object oriented. The software agents 265 are implemented as objects and are intelligent, state aware, and are imbued with specific goals for which they autonomously initiate behaviors to achieve. Their behavior is relatively simple and is partially configurable through scripts and properties. The behavior is designed to achieve selected goals such as achieving an assigned lot due date, achieving a predefined level of quality, maximizing machine utilization, and scheduling opportunistic preventive maintenance. The helper class is a class of objects to which various objects that are software agents 265 delegate various responsibilities or that provide some useful service in the process flow 100. Publishers and listeners, mentioned above, are also helper class objects.

Thus, some portions of the detailed descriptions herein are presented in terms of a software implemented process involving symbolic representations of operations on data bits within a memory in a computing system or a computing device. These descriptions and representations are the means used by those in the art to most effectively convey the substance of their work to others skilled in the art. The process and operation require physical manipulations of physical quantities. Usually, though not necessarily, these quantities take the form of electrical, magnetic, or optical signals capable of being stored, transferred, combined, compared, and otherwise manipulated. It has proven convenient at

Petitioner STMICROELECTRONICS, INC.,
Ex. 1006, IPR2022-00681, Pg. 124

times, principally for reasons of common usage, to refer to these signals as bits, values, elements, symbols, characters, terms, numbers, or the like.

It should be borne in mind, however, that all of these and similar terms are to be associated with the appropriate physical quantities and are merely convenient labels applied to these quantifies. Unless specifically stated or otherwise as may be apparent, throughout the present disclosure, these descriptions refer to the action and processes of an electronic device, that manipulates and transforms data represented as physical (electronic, magnetic, or optical) quantities within some electronic device's storage into other data similarly represented as physical quantities within the storage, or in transmission or display devices. Exemplary of the terms denoting such a description are, without limitation, the terms "processing," "computing," "calculating," "determining," "displaying," and the like.

Note that the software implemented aspects of the invention are typically encoded on some form of program storage medium or implemented over some type of transmission medium. The program storage medium may be magnetic (*e.g.*, a floppy disk or a hard drive) or optical (*e.g.*, a **c**ompact **d**isk **r**ead **o**nly **m**emory, or "CD ROM"), and may be read only or random access. Similarly, the transmission medium may be twisted wire pairs, coaxial cable, optical fiber, or some other suitable transmission medium known to the art. The invention is not limited by these aspects of any given implementation.

This concludes the detailed description. The particular embodiments disclosed above are illustrative only, as the invention may be modified and practiced in different but equivalent manners apparent to those skilled in the art having the benefit of the teachings herein. Note that further variations not discussed may be employed in still other embodiments. Furthermore, no limitations are intended to the details of construction or design herein shown, other than as described in the claims below. It is therefore evident that the particular embodiments disclosed above may be altered or modified and all such variations are considered within the scope and spirit of the invention. Accordingly, the protection sought herein is as set forth in the claims below.

Petitioner STMICROELECTRONICS, INC.,
Ex. 1006, IPR2022-00681, Pg. 125

CLAIMS

WHAT IS CLAIMED:

1. A method for scheduling in an automated manufacturing environment, comprising:

detecting an occurrence of a predetermined event in a process flow;

notifying a software scheduling agent of the occurrence; and

reactively scheduling an action from the software scheduling agent responsive to the detection of the predetermined event.

2. The method of claim 1, wherein detecting the occurrence of the predetermined event includes detecting an unplanned event or an unexpected event.

3. The method of claim 1, wherein detecting the occurrence of the predetermined event includes detecting an occurrence of one of an appointment state change, a factory state change, and an alarm event.

4. The method of claim 3, wherein detecting the appointment state change includes detecting at least one of an appointment cancellation, an appointment expansion, an appointment shrinking, an appointment abort, an appointment changing status, an appointment shift, an appointment override, an transport time update, a load time update, an unload time update, a lot joining a batch, a lot leaving a batch, canceling a lot from a batch, and a commitment window update.

5. The method of claim 3, wherein detecting the factory state change includes detecting at least one of detection of a downtime occurrence; a machine becoming available; a PM/Qual being detected; a chamber going down; a chamber becoming available, a change in machine capabilities; a change in machine types; an addition of a process; an addition of a process operation; a lot arriving at a machine; a lot process changed, a lot placed on hold, a lot released from hold, a lot priority changed, a lot due date changed, a lot wafer count changed, a lot process operation changed, and a lot departing a machine.

6. The method of claim 3, wherein detecting the alarm event includes detecting at least one of an alarm firing for an appointment start time and an alarm firing for an appointment end time.

Petitioner STMICROELECTRONICS, INC.,
Ex. 1006, IPR2022-00681, Pg. 126

7. The method of claim 1, wherein detecting the predetermined event includes detecting at least one of an appointment cancellation, an appointment expansion, an appointment shrinking, an appointment abort, an appointment becoming active, an appointment nearing completion, an appointment completing, an appointment shift, an appointment override, and a commitment window update, detection of a downtime occurrence; a machine becoming available; a PM/Qual being detected; a chamber going down; a chamber becoming available, a change in machine capabilities; a change in machine types; an addition of a process; an addition of a process operation; a lot arriving at a machine; a lot process changed, a lot placed on hold, a lot released from hold, a lot priority changed, a lot due date changed, a lot wafer count changed, a lot process operation changed, a lot departing a machine, an alarm firing for an appointment start time and an alarm firing for an appointment end time.

8. The method of claim 1, wherein notifying the software scheduling agent of the occurrence includes:

sending an indication of the occurrence to a publisher;

publishing the occurrence from the publisher to a subscribing listener; and

calling the software scheduling agent from the subscribing listener.

9. The method of claim 1, wherein reactively scheduling the action includes at least one of aborting a scheduled appointment in progress; canceling a scheduled appointment before it begins; scheduling a new appointment; starting a scheduled appointment; expanding the duration of a scheduled appointment; shrinking the duration of a scheduled appointment; shifting a scheduled appointment; adding new processing capabilities; deleting old processing capabilities; setting an alarm; canceling an alarm; and changing the status of an appointment.

10. The method of claim 1, further comprising proactively scheduling an appointment with which the predetermined event is associated.

11. The method of claim 10, wherein proactively scheduling the appointment includes proactively scheduling the appointment from the software scheduling agent.

Petitioner STMICROELECTRONICS, INC.,
Ex. 1006, IPR2022-00681, Pg. 127

12. A computer-readable, program storage medium encoded with instructions that, when executed by a computer, perform a method for scheduling in an automated manufacturing environment, the method comprising:

detecting an occurrence of a predetermined event in a process flow;

notifying a software scheduling agent of the occurrence; and

reactively scheduling an action from the software scheduling agent responsive to the detection of the predetermined event.

13. The program storage medium of claim 12, wherein detecting the occurrence of the predetermined event in the encoded method includes detecting an unplanned event or an unexpected event.

14. The program storage medium of claim 12, wherein detecting the occurrence of the predetermined event in the encoded method includes detecting an occurrence of one of an appointment state change, a factory state change, and an alarm event.

15. The program storage medium of claim 12, wherein detecting the predetermined event in the encoded method includes detecting at least one of an appointment cancellation, an appointment expansion, an appointment shrinking, an appointment abort, an appointment changing status, an appointment shift, an appointment override, an transport time update, a load time update, an unload time update, a lot joining a batch, a lot leaving a batch, canceling a lot from a batch, a commitment window update, detection of a downtime occurrence; a machine becoming available; a PM/Qual being detected; a chamber going down; a chamber becoming available, a change in machine capabilities; a change in machine types; an addition of a process; an addition of a process operation; a lot arriving at a machine; a lot process changed, a lot placed on hold, a lot released from hold, a lot priority changed, a lot due date changed, a lot wafer count changed, a lot process operation changed, a lot departing a machine, an alarm firing for an appointment start time and an alarm firing for an appointment end time.

16. The program storage medium of claim 12, wherein notifying the software scheduling agent of the occurrence in the encoded method includes:

sending an indication of the occurrence to a publisher;

publishing the occurrence from the publisher to a subscribing listener; and

Petitioner STMICROELECTRONICS, INC.,
Ex. 1006, IPR2022-00681, Pg. 128

calling the software scheduling agent from the subscribing listener.

17. The program storage medium of claim 12, wherein reactively scheduling the action in the encoded method includes at least one of aborting a scheduled appointment in progress; canceling a scheduled appointment before it begins; scheduling a new appointment; starting a scheduled appointment; expanding the duration of a scheduled appointment; shrinking the duration of a scheduled appointment; shifting a scheduled appointment; adding new processing capabilities; deleting old processing capabilities; setting an alarm; canceling an alarm; and changing the status of an appointment.

18. The program storage medium of claim 12, wherein the encoded method further comprises proactively scheduling an appointment with which the predetermined event is associated.

19. A computing system programmed to perform a method for scheduling in an automated manufacturing environment, the method comprising:

detecting an occurrence of a predetermined event in a process flow;

notifying a software scheduling agent of the occurrence; and

reactively scheduling an action from the software scheduling agent responsive to the detection of the predetermined event.

20. The computing system of claim 19, wherein detecting the occurrence of the predetermined event in the programmed method includes detecting an unplanned event or an unexpected event.

21. The computing system of claim 19, wherein detecting the occurrence of the predetermined event in the programmed method includes detecting an occurrence of one of an appointment state change, a factory state change, and an alarm event.

22. The computing system of claim 19, wherein detecting the predetermined event in the programmed method includes detecting at least one of an appointment cancellation, an appointment expansion, an appointment shrinking, an appointment abort, an appointment changing status, an appointment shift, an appointment override, an transport time update, a load time update, an unload time update, a lot joining a batch, a lot leaving a batch, canceling a lot from a batch, a commitment window update, detection of a downtime occurrence; a

Petitioner STMICROELECTRONICS, INC.,
Ex. 1006, IPR2022-00681, Pg. 129

machine becoming available; a PM/Qual being detected; a chamber going down; a chamber becoming available, a change in machine capabilities; a change in machine types; an addition of a process; an addition of a process operation; a lot arriving at a machine; a lot process changed, a lot placed on hold, a lot released from hold, a lot priority changed, a lot due date changed, a lot wafer count changed, a lot process operation changed, a lot departing a machine, an alarm firing for an appointment start time and an alarm firing for an appointment end time.

23. The computing system of claim 19, wherein notifying the software scheduling agent of the occurrence in the programmed method includes:

sending an indication of the occurrence to a publisher;

publishing the occurrence from the publisher to a subscribing listener; and

calling the software scheduling agent from the subscribing listener.

24. The computing system of claim 19, wherein reactively scheduling the action in the programmed method includes at least one of aborting a scheduled appointment in progress; canceling a scheduled appointment before it begins; scheduling a new appointment; starting a scheduled appointment; expanding the duration of a scheduled appointment; shrinking the duration of a scheduled appointment; shifting a scheduled appointment; adding new processing capabilities; deleting old processing capabilities; setting an alarm; canceling an alarm; and changing the status of an appointment.

25. The computing system of claim 19, wherein the encoded method further comprises proactively scheduling an appointment with which the predetermined event is associated.

26. An apparatus for scheduling in an automated manufacturing environment, the apparatus comprising:

means for detecting an occurrence of a predetermined event in a process flow;

means for notifying a software scheduling agent of the occurrence; and

means for reactively scheduling an action from the software scheduling agent responsive to the detection of the predetermined event.

Petitioner STMICROELECTRONICS, INC.,
Ex. 1006, IPR2022-00681, Pg. 130

27. The method of claim 26, wherein the means for detecting the occurrence of the predetermined event includes means for detecting an unplanned event or an unexpected event.

28. The method of claim 26, wherein the means for detecting the occurrence of the predetermined event includes means for detecting an occurrence of one of an appointment state change, a factory state change, and an alarm event.

29. The method of claim 26, wherein the means for detecting the predetermined event includes means for detecting at least one of an appointment cancellation, an appointment expansion, an appointment shrinking, an appointment abort, an appointment changing status, an appointment shift, an appointment override, an transport time update, a load time update, an unload time update, a lot joining a batch, a lot leaving a batch, canceling a lot from a batch, a commitment window update, detection of a downtime occurrence; a machine becoming available; a PM/Qual being detected; a chamber going down; a chamber becoming available, a change in machine capabilities; a change in machine types; an addition of a process; an addition of a process operation; a lot arriving at a machine; a lot process changed, a lot placed on hold, a lot released from hold, a lot priority changed, a lot due date changed, a lot wafer count changed, a lot process operation changed, a lot departing a machine, an alarm firing for an appointment start time and an alarm firing for an appointment end time.

30. The method of claim 26, wherein the means for notifying the software scheduling agent of the occurrence includes:

means for sending an indication of the occurrence to a publisher;

means for publishing the occurrence from the publisher to a subscribing listener; and

means for calling the software scheduling agent from the subscribing listener.

31. The method of claim 26, wherein the means for reactively scheduling the action includes means for at least one of aborting a scheduled appointment in progress; canceling a scheduled appointment before it begins; scheduling a new appointment; starting a scheduled appointment; expanding the duration of a scheduled appointment; shrinking the duration of a scheduled appointment; shifting a scheduled appointment; adding new

Petitioner STMICROELECTRONICS, INC.,
Ex. 1006, IPR2022-00681, Pg. 131

processing capabilities; deleting old processing capabilities; setting an alarm; canceling an alarm; and changing the status of an appointment.

32. The method of claim 26, further comprising means for proactively scheduling an appointment with which the predetermined event is associated.

33. An automated manufacturing environment, comprising:

a process flow; and

a computing system, including a plurality of software scheduling agents residing thereon, the software scheduling agents being capable of reactively scheduling appointments for activities in the process flow responsive to a plurality of predetermined events.

34. The automated manufacturing environment of claim 33, further comprising a plurality of publishers and subscribers capable of detecting an occurrence of one of the predetermined events in the process flow and notifying one of the software scheduling agent of the occurrence.

35. The automated manufacturing environment of claim 34, wherein detecting the occurrence of the predetermined event includes detecting an unplanned event or an unexpected event.

36. The automated manufacturing environment of claim 34, wherein detecting the occurrence of the predetermined event includes detecting an occurrence of one of an appointment state change, a factory state change, and an alarm event.

37. The automated manufacturing environment of claim 34, wherein detecting the predetermined event includes detecting at least one of an appointment cancellation, an appointment expansion, an appointment shrinking, an appointment abort, an appointment changing status, an appointment shift, an appointment override, an transport time update, a load time update, an unload time update, a lot joining a batch, a lot leaving a batch, canceling a lot from a batch, a commitment window update, detection of a downtime occurrence; a machine becoming available; a PM/Qual being detected; a chamber going down; a chamber becoming available, a change in machine capabilities; a change in machine types; an addition of a process; an addition of a process operation; a lot arriving at a machine; a lot process

Petitioner STMICROELECTRONICS, INC.,
Ex. 1006, IPR2022-00681, Pg. 132

changed, a lot placed on hold, a lot released from hold, a lot priority changed, a lot due date changed, a lot wafer count changed, a lot process operation changed, and a lot departing a machine, an alarm firing for an appointment start time and an alarm firing for an appointment end time.

38. The automated manufacturing environment of claim 34, wherein notifying the software scheduling agent of the occurrence includes:

sending an indication of the occurrence to a publisher;

publishing the occurrence from the publisher to a subscribing listener; and

calling the software scheduling agent from the subscribing listener.

39. The automated manufacturing environment of claim 34, wherein reactively scheduling the action includes at least one of aborting a scheduled appointment in progress; canceling a scheduled appointment before it begins; scheduling a new appointment; starting a scheduled appointment; expanding the duration of a scheduled appointment; shrinking the duration of a scheduled appointment; shifting a scheduled appointment; adding new processing capabilities; deleting old processing capabilities; setting an alarm; canceling an alarm; and changing the status of an appointment.

40. The automated manufacturing environment of claim 34, further comprising proactively scheduling an appointment with which the predetermined event is associated.

41. The automated manufacturing environment of claim 33, further comprising at least one of a manufacturing execution system and an automated materials handling system.

42. The automated manufacturing environment of claim 33, wherein the computing system is at least one of a local area network, a wide area network, a system area network, an intranet, or a portion of the Internet.

43. The automated manufacturing environment of claim 33, wherein the process flow comprises a portion of a semiconductor manufacturing facility.

44. An automated manufacturing environment, comprising:

a plurality of work pieces;

a plurality of processing stations through which the work pieces may be processed;

Petitioner STMICROELECTRONICS, INC.,
Ex. 1006, IPR2022-00681, Pg. 133

a plurality of software scheduling agents capable of scheduling appointments for processing the work pieces through the process stations, the software scheduling agents capable of reactively scheduling responsive to predetermined events.

45. The automated manufacturing environment of claim 44, further comprising a plurality of publishers and subscribers capable of detecting an occurrence of one of the predetermined events in the process flow and notifying one of the software scheduling agent of the occurrence.

46. The automated manufacturing environment of claim 45, wherein detecting the occurrence of the predetermined event includes detecting an unplanned event or an unexpected event.

47. The automated manufacturing environment of claim 45, wherein detecting the occurrence of the predetermined event includes detecting an occurrence of one of an appointment state change, a factory state change, and an alarm event.

48. The automated manufacturing environment of claim 45, wherein detecting the predetermined event includes detecting at least one of an appointment cancellation, an appointment expansion, an appointment shrinking, an appointment abort, an appointment changing status, an appointment shift, an appointment override, an transport time update, a load time update, an unload time update, a lot joining a batch, a lot leaving a batch, canceling a lot from a batch, a commitment window update, detection of a downtime occurrence; a machine becoming available; a PM/Qual being detected; a chamber going down; a chamber becoming available, a change in machine capabilities; a change in machine types; an addition of a process; an addition of a process operation; a lot arriving at a machine; a lot process changed, a lot placed on hold, a lot released from hold, a lot priority changed, a lot due date changed, a lot wafer count changed, a lot process operation changed, a lot departing a machine, an alarm firing for an appointment start time and an alarm firing for an appointment end time.

49. The automated manufacturing environment of claim 45, wherein notifying the software scheduling agent of the occurrence includes:

sending an indication of the occurrence to a publisher;

Petitioner STMICROELECTRONICS, INC.,
Ex. 1006, IPR2022-00681, Pg. 134

publishing the occurrence from the publisher to a subscribing listener; and

calling the software scheduling agent from the subscribing listener.

50. The automated manufacturing environment of claim 45, wherein reactively scheduling the action includes at least one of aborting a scheduled appointment in progress; canceling a scheduled appointment before it begins; scheduling a new appointment; starting a scheduled appointment; expanding the duration of a scheduled appointment; shrinking the duration of a scheduled appointment; shifting a scheduled appointment; adding new processing capabilities; deleting old processing capabilities; setting an alarm; canceling an alarm; and changing the status of an appointment.

51. The automated manufacturing environment of claim 45, further comprising proactively scheduling an appointment with which the predetermined event is associated.

52. The automated manufacturing environment of claim 44, further comprising at least one of a manufacturing execution system and an automated materials handling system.

53. The automated manufacturing environment of claim 44, wherein the computing system is at least one of a local area network, a wide area network, a system area network, an intranet, or a portion of the Internet.

Petitioner STMICROELECTRONICS, INC.,
Ex. 1006, IPR2022-00681, Pg. 135

ABSTRACT OF THE DISCLOSURE

A method and apparatus for scheduling in an automated manufacturing environment, comprising are disclosed. The method includes detecting an occurrence of a predetermined event in a process flow; notifying a software scheduling agent of the occurrence; and reactively scheduling an action from the software scheduling agent responsive to the detection of the predetermined event. The apparatus is automated manufacturing environment including a process flow and a computing system. The computing system further includes a plurality of software scheduling agents residing thereon, the software scheduling agents being capable of reactively scheduling appointments for activities in the process flow responsive to a plurality of predetermined events.

Petitioner STMICROELECTRONICS, INC.,
Ex. 1006, IPR2022-00681, Pg. 136

PATENT
2000.079600/JAP
TT4739

DECLARATION

As a below named inventor, I hereby declare that:

My residence, post office address and citizenship are as stated below next to my name.

I believe I am the original, first and sole inventor (if only one name is listed below) or the below named inventors are the original, first and joint inventors (if plural names are listed below) of the subject matter which is claimed and for which a patent is sought on the invention entitled **AGENT REACTIVE SCHEDULING IN AN AUTOMATED MANUFACTURING ENVIRONMENT**, the Specification of which is attached hereto.

I hereby state that I have reviewed and understand the contents of the above-identified specification, including the claims.

I acknowledge the duty to disclose to the Patent and Trademark Office all information known to me to be material to patentability of the subject matter claimed in this application, as "materiality" is defined in Title 37, Code of Federal Regulations, § 1.56.

I hereby claim priority benefits under Title 35, United States Code, § 119 and/or § 365 of any foreign application(s) for patent or inventor's certificate, PCT international application(s), and United States provisional application(s), listed below and have also identified below any foreign application for patent or inventor's certificate, PCT international application, or United States provisional application, having a filing date before that of the application on which priority is claimed:

PRIORITY APPLICATION(S)			**Priority Claimed**
(Number)	(Country)	(Date Filed)	Yes/No
(Number)	(Country)	(Date Filed)	Yes/No

I hereby claim the benefit under Title 35, United States Code, § 120 and/or § 365 of any United States application(s) and PCT international application(s) listed below and, insofar as the subject matter of each of the claims of this application is not disclosed in the prior United States or PCT international application in the manner provided by the first paragraph of Title 35, United States Code, § 112, I acknowledge the duty to disclose all information known to me to be material to patentability of the subject matter claimed in this application, as "materiality" is defined in Title 37, Code of Federal Regulations, § 1.56, which becomes available between the filing date of the prior application and the national or PCT international filing date of this application:

(Application Serial No.)	(Filing Date)	(Status)
(Application Serial No.)	(Filing Date)	(Status)

I hereby direct that all correspondence and telephone calls be addressed to Jeffrey A. Pyle, Williams, Morgan & Amerson, P.C., 7676 Hillmont, Suite 250, Houston, Texas 77040, (713) 934-4053.

I HEREBY DECLARE THAT ALL STATEMENTS MADE OF MY OWN KNOWLEDGE ARE TRUE AND THAT ALL STATEMENTS MADE ON INFORMATION AND BELIEF ARE BELIEVED TO BE TRUE; AND FURTHER THAT THESE STATEMENTS WERE MADE WITH THE KNOWLEDGE THAT WILLFUL FALSE STATEMENTS AND THE LIKE SO MADE ARE PUNISHABLE BY FINE OR IMPRISONMENT, OR BOTH, UNDER SECTION 1001 OF TITLE 18 OF THE UNITED STATES CODE AND THAT SUCH WILLFUL FALSE STATEMENTS MAY JEOPARDIZE THE VALIDITY OF THE APPLICATION OR ANY PATENT ISSUED THEREON.

Inventor's Full Name:	GUSTAVO		MATA
Inventor's Signature:	Gustavo Mata		
Country of Citizenship:	USA	Date: 4-24-02	
Residence Address: (street, number, city, state, and/or country)	11520 Spicewood Parkway Austin, Tx 78750		
Post Office Address: (if different from above)	same as above		

Inventor's Full Name:	STEVEN	C.	NETTLES
Inventor's Signature:	Steven C. Nettles		
Country of Citizenship:	USA	Date: 4/24/02	
Residence Address: (street, number, city, state, and/or country)	812 Ranchview Drive ~~Austin~~ Johnson City, TX 78636		
Post Office Address: (if different from above)	same as above		

Inventor's Full Name:	LARRY	D.	BARTO
Inventor's Signature:	Larry D Barto		
Country of Citizenship:	USA	Date: 4/24/02	
Residence Address: (street, number, city, state, and/or country)	15 Sunset Trail Austin, TX 78745		
Post Office Address: (if different from above)	same as above		

Petitioner STMICROELECTRONICS, INC.,
Ex. 1006, IPR2022-00681, Pg. 138

Inventor's Full Name:	YIWEI		LI
Inventor's Signature:	Yi - Li		
Country of Citizenship:	PRC.	Date:	4/24/02
Residence Address: (street, number, city, state, and/or country)	8721 Water Ash Way Austin TX 78750		
Post Office Address: (if different from above)	same as above		

Petitioner STMICROELECTRONICS, INC.,
Ex. 1006, IPR2022-00681, Pg. 139

IN THE UNITED STATES PATENT AND TRADEMARK OFFICE

In re Application of:	§	
	§	
GUSTAVO MATA	§	
STEVEN C. NETTLES	§	
LARRY D. BARTO	§	Examiner: Unknown
YIWEI LI	§	
	§	Group Art Unit: Unknown
Serial No.: Unknown	§	
	§	Attorney Docket: 2000.079600/TT4739
Filed: Concurrently Herewith	§	
	§	
For: AGENT REACTIVE SCHEDULING IN AN AUTOMATED MANUFACTURING ENVIRONMENT	§	

POWER OF ATTORNEY

Assistant Commissioner for Patents

Washington, D.C. 20231

Sir:

The undersigned, being the inventors named in the above-identified application, hereby revoke any previous Powers of Attorney and appoint:

> Elizabeth A. Apperley, Reg. No. 36,428; Bradley Botsch, Reg. No. 34,552; Michael Caywood, Reg. No. 37,797; Daniel R. Collopy, Reg. No. 33,667; Paul S. Drake, Reg. No. 33,491; Rajendra Jaipershad, Reg. No. 44,168; Diana Roberts, Reg. No. 36,654; Richard J. Roddy, Reg. No. 27,688; and Harry A. Wolin, Reg. No. 32,638, of ADVANCED MICRO DEVICES, INC.; and
>
> Danny L. Williams, Reg. No. 31,892; Terry D. Morgan, Reg. No. 31,181; J. Mike Amerson, Reg. No. 35,426; Kenneth D. Goodman, Reg. No. 30,460; Jeffrey A. Pyle, Reg. No. 34,904; Jaison C. John, Reg. No. 50,737; Ruben S. Bains, Reg. No. 46,532; Steven Koon Hon Wong, Reg. No. 48,459; Scott F. Diring, Reg. No. 35,119; George J. Oehling, Reg. No. 40,471; Shelley P.M. Fussey, Reg. No. 39,458; Mark D. Moore, Reg. No. 42,903; Louis H. Iselin, Reg. No. 42,684; Raymund F. Eich, Reg. No. 42,508; Daren C. Davis, Reg. No. 38,425; and Stephanie A. Wardwell, Reg. No. 48,025, of WILLIAMS, MORGAN & AMERSON, P.C.,

as its attorney or agent so long as they remain with such firms, with full power of substitution and revocation, to prosecute the application, to make alterations and amendments therein, to transact all business in the Patent and Trademark Office in connection therewith, and to receive any Letters Patent, and for one year after issuance of such Letters Patent to file any request for a certificate of correction that may be deemed appropriate.

Please direct all communications as follows:

Jeffrey A. Pyle
WILLIAMS, MORGAN & AMERSON, P.C.
7676 Hillmont, Suite 250
Houston, Texas 77040
(713) 934-4053

Signature: Gustavo Mata Date: 4-24-02
Gustavo Mata

Signature: Steven C. Nettles Date: 4/24/02
Steven C. Nettles

Signature: Larry D. Barto Date: 4/24/02
Larry D. Barto

Signature: Yiwei Li Date: 4/24/02
Yiwei Li

Petitioner STMICROELECTRONICS, INC.,
Ex. 1006, IPR2022-00681, Pg. 141

PATENT APPLICATION SERIAL NO. _____

U.S. DEPARTMENT OF COMMERCE
PATENT AND TRADEMARK OFFICE
FEE RECORD SHEET

05/02/2002 EFLORES 00000039 010365 10135145

01 FC:101 740.00 CH
02 FC:102 252.00 CH
03 FC:103 594.00 CH

PTO-1556
(5/87)

*U.S. Government Printing Office: 2001 — 481-697/59173

Best Available Copy

PATENT APPLICATION FEE DETERMINATION RECORD
Effective October 1, 2001

Application or Docket Number: TT 4739

CLAIMS AS FILED - PART I

	(Column 1)	(Column 2)
TOTAL CLAIMS	53	
FOR	NUMBER FILED	NUMBER EXTRA
TOTAL CHARGEABLE CLAIMS	53 minus 20=	* 33
INDEPENDENT CLAIMS	4 minus 3 =	* 3
MULTIPLE DEPENDENT CLAIM PRESENT		☐

* If the difference in column 1 is less than zero, enter "0" in column 2

SMALL ENTITY TYPE ☐ OR OTHER THAN SMALL ENTITY

RATE	FEE		RATE	FEE
BASIC FEE	370.00	OR	BASIC FEE	740.00
X$ 9=		OR	X$18=	594
X42=		OR	X84=	252
+140=		OR	+280=	
TOTAL		OR	TOTAL	1586

CLAIMS AS AMENDED - PART II

AMENDMENT A

	(Column 1) CLAIMS REMAINING AFTER AMENDMENT		(Column 2) HIGHEST NUMBER PREVIOUSLY PAID FOR	(Column 3) PRESENT EXTRA
Total	*	Minus	**	=
Independent	*	Minus	***	=
FIRST PRESENTATION OF MULTIPLE DEPENDENT CLAIM				☐

SMALL ENTITY OR OTHER THAN SMALL ENTITY

RATE	ADDITIONAL FEE		RATE	ADDITIONAL FEE
X$ 9=		OR	X$18=	
X42=		OR	X84=	
+140=		OR	+280=	
TOTAL ADDIT. FEE		OR	TOTAL ADDIT. FEE	

AMENDMENT B

	(Column 1) CLAIMS REMAINING AFTER AMENDMENT		(Column 2) HIGHEST NUMBER PREVIOUSLY PAID FOR	(Column 3) PRESENT EXTRA
Total	*	Minus	**	=
Independent	*	Minus	***	=
FIRST PRESENTATION OF MULTIPLE DEPENDENT CLAIM				☐

RATE	ADDITIONAL FEE		RATE	ADDITIONAL FEE
X$ 9=		OR	X$18=	
X42=		OR	X84=	
+140=		OR	+280=	
TOTAL ADDIT. FEE		OR	TOTAL ADDIT. FEE	

AMENDMENT C

	(Column 1) CLAIMS REMAINING AFTER AMENDMENT		(Column 2) HIGHEST NUMBER PREVIOUSLY PAID FOR	(Column 3) PRESENT EXTRA
Total	*	Minus	**	=
Independent	*	Minus	***	=
FIRST PRESENTATION OF MULTIPLE DEPENDENT CLAIM				☐

RATE	ADDITIONAL FEE		RATE	ADDITIONAL FEE
X$ 9=		OR	X$18=	
X42=		OR	X84=	
+140=		OR	+280=	
TOTAL ADDIT. FEE		OR	TOTAL ADDIT. FEE	

* If the entry in column 1 is less than the entry in column 2, write "0" in column 3.
** If the "Highest Number Previously Paid For" IN THIS SPACE is less than 20, enter "20."
***If the "Highest Number Previously Paid For" IN THIS SPACE is less than 3, enter "3."
The "Highest Number Previously Paid For" (Total or Independent) is the highest number found in the appropriate box in column 1.

Petitioner STMICROELECTRONICS, INC., Ex. 1006, IPR2022-00681, Pg. 143

Best Available Co

CLAIMS ONLY

SERIAL NO.	FILING DATE
101135 145	4-30-02

APPLICANT(S)

CLAIMS

	AS FILED		AFTER 1st AMENDMENT		AFTER 2nd AMENDMENT	
	IND.	DEP.	IND.	DEP.	IND.	DEP.
1						
2						
3						
4						
5						
6						
7						
8						
9						
10						
11						
12						
13						
14						
15						
16						
17						
18						
19						
20						
21						
22						
23						
24						
25						
26						
27						
28						
29						
30						
31						
32						
33						
34						
35						
36						
37						
38						
39						
40						
41						
42						
43						
44						
45						
46						
47						
48						
49						
50						
TOTAL IND.						
TOTAL DEP.						
TOTAL CLAIMS						

	*		*		*	
	IND.	DEP.	IND.	DEP.	IND.	DEP.
51						
52						
53						
54						
55						
56						
57						
58						
59						
60						
61						
62						
63						
64						
65						
66						
67						
68						
69						
70						
71						
72						
73						
74						
75						
76						
77						
78						
79						
80						
81						
82						
83						
84						
85						
86						
87						
88						
89						
90						
91						
92						
93						
94						
95						
96						
97						
98						
99						
100						
TOTAL IND.	6					
TOTAL DEP.	47					
TOTAL CLAIMS	53					

*MAY BE USED FOR ADDITIONAL CLAIMS OR ADMENDMENTS

FORM PTO-2022 (1-98)

U.S. DEPARTMENT OF COMMERCE
Patent and Trademark Office

U.S. Government Printing Office: 1998 - 433-214/70303

ARTIFACT SHEET

Enter artifact number below. Artifact number is application number + artifact type code (see list below) + sequential letter (A, B, C ...). The first artifact folder for an artifact type receives the letter A, the second B, etc.. Examples: 59123456PA, 59123456PB, 59123456ZA, 59123456ZB

10135145ZA

Indicate quantity of a single type of artifact received but not scanned. Create individual artifact folder/box and artifact number for each Artifact Type.

☐ CD(s) containing:
- computer program listing ☐ — Doc Code: Computer — Artifact Type Code: P
- pages of specification and/or sequence listing and/or table ☐ — Doc Code: Artifact — Artifact Type Code: S
- content unspecified or combined ☐ — Doc Code: Artifact — Artifact Type Code: U

☐ Stapled Set(s) Color Documents or B/W Photographs
Doc Code: Artifact Artifact Type Code: C

☐ Microfilm(s)
Doc Code: Artifact Artifact Type Code: F

☐ Video tape(s)
Doc Code: Artifact Artifact Type Code: V

☐ Model(s)
Doc Code: Artifact Artifact Type Code: M

☐ Bound Document(s)
Doc Code: Artifact Artifact Type Code: B

☐ Confidential Information Disclosure Statement or Other Documents marked Proprietary, Trade Secrets, Subject to Protective Order, Material Submitted under MPEP 724.02, etc.
Doc Code: Artifact Artifact Type Code X

☑ Other, description: Floppy disk
Doc Code: Artifact Artifact Type Code: Z

Petitioner STMICROELECTRONICS, INC.,
Ex. 1006, IPR2022-00681, Pg. 145

UNITED STATES DEPARTMENT OF COMMERCE
Patent and Trademark Office

ASSISTANT SECRETARY AND COMMISSIONER
OF PATENTS AND TRADEMARKS
Washington, D.C. 20231

2 BT
01-03-03

CHANGE OF ADDRESS/POWER OF ATTORNEY

FILE LOCATION 21X1 SERIAL NUMBER 10135145 PATENT NUMBER

THE CORRESPONDENCE ADDRESS HAS BEEN CHANGED TO CUSTOMER # 23720

THE PRACTITIONERS OF RECORD HAVE BEEN CHANGED TO CUSTOMER # 23720

THE FEE ADDRESS HAS BEEN CHANGED TO CUSTOMER # 23720

ON 10/28/02 THE ADDRESS OF RECORD FOR CUSTOMER NUMBER 23720 IS:

WILLIAMS MORGAN & AMERSON
7676 HILLMONT
SUITE 250
HOUSTON TX 77040

RECEIVED
NOV 14 2002
Technology Center 2600

AND THE PRACTITIONERS OF RECORD FOR CUSTOMER NUMBER 23720 ARE:

30460 31181 31892 34904 35119 35426 39458 40471 42508 42903
48025 52226

PTO INSTRUCTIONS: PLEASE TAKE THE FOLLOWING ACTION WHEN THE CORRESPONDENCE ADDRESS HAS BEEN CHANGED TO CUSTOMER NUMBER: RECORD, ON THE NEXT AVAILABLE CONTENTS LINE OF THE FILE JACKET, 'ADDRESS CHANGE TO CUSTOMER NUMBER'. LINE THROUGH THE OLD ADDRESS ON THE FILE JACKET LABEL AND ENTER ONLY THE 'CUSTOMER NUMBER' AS THE NEW ADDRESS. FILE THIS LETTER IN THE FILE JACKET. WHEN ABOVE CHANGES ARE ONLY TO FEE ADDRESS AND/OR PRACTITIONERS OF RECORD, FILE LETTER IN THE FILE JACKET.
THIS FILE IS ASSIGNED TO GAU 2632.

Petitioner STMICROELECTRONICS, INC.,
Ex. 1006, IPR2022-00681, Pg. 146

DEC 31 2002
PATENT & TRADEMARK OFFICE
JC109

A 3
13T

2632 01-7-03

PTO/SB/36 (11-00) (Modified)
Approved for use through 10/31/2001. OMB 0651-0031
U.S. Patent and Trademark Office; U.S. DEPARTMENT OF COMMERCE
Under the Paperwork Reduction Act of 1995, no persons are required to respond to a collection of information unless it displays a valid OMB control number.

REQUEST TO RESCIND PREVIOUS NONPUBLICATION REQUEST 35 U.S.C. 122(b)(2)(B)(ii)

23720
PATENT TRADEMARK OFFICE

Application Number	10/135,145
Filing Date	April 30, 2002
First Named Inventor	Gustavo Mata
Title	AGENT REACTIVE SCHEDULING IN AN AUTOMATED MANUFACTURING ENVIRONMENT
Atty Docket Number	2000.079600/TT4738
Group Art Unit	2632
Examiner	Unknown

RECEIVED
JAN 0 3 2003
Technology Center 2600

I hereby **rescind** the previous request that the above-identified application not be published under 35 U.S.C. 122(b).

December 26, 2002
Date

Signature

Jeffrey A. Pyle
Typed or printed name

RECEIVED
JAN 06 2003
Technology Center 2600

This request must be signed in compliance with 37 CFR 1.33(b).

Note: Filing this rescission of a previous nonpublication request is considered the notice of a subsequent foreign or International filing required by 35 USC 122(b)(2)(B)(iii) and 37 CFR 1.213(c) if this rescission is filled no later than forty-five days (45) days after the date of filing of such foreign or international application. See 37 CFR 1.137(f) if a notice of Subsequent foreign or International filing required by 35 USC 122(b)(2)(B)(iii) and 37 CFR 1.213(c) is **not** filed within forty-five days (45) days after the date of filing of the foreign or international application.

CERTIFICATE OF MAILING OR TRANSMISSION

I hereby certify that this correspondence is being deposited with the United States Postal Service with sufficient postage as first class mail in an envelope addressed to: Commissioner for Patents, Washington, DC 20231, or facsimile transmitted to the U.S. Patent and Trademark Office on:

Name (Print/Type)	Yolanda Murillo		
Signature	Yolanda Murillo	Date	December 26, 2002

Burden Hour Statement: This collection of information is required by 37 CFR 1.213(b). The information used by the public to rescind a previously filed request that an application not be published under 35 U.S.C. 122(b) (and the PTO to process this rescission). Confidentiality is governed by 35 U.S.C. 122 and 37 CFR 1.14. This form is estimated to take 6 minutes to complete. This time will vary depending upon the needs of the individual case. Any comments on the amount of time you are required to complete this form should be sent to the Chief Information Officer, U.S. Patent and Trademark Office, Washington, DC 20231. DO NOT SEND FEES OR COMPLETED FORMS TO THIS ADDRESS. SEND TO: Assistant Commissioner for Patents, Washington, DC 20231.

OIPE JC178
MAR 3 1 2003
PATENT & TRADEMARK OFFICE

#4
2632
5-21-03

PATENT

IN THE UNITED STATES PATENT AND TRADEMARK OFFICE

In re Application of:

GUSTAVO MATA
STEVEN C. NETTLES
LARRY D. BARTO
YIWEI LI

Serial No.: 10/135,145

Filed: APRIL 30, 2002

For: AGENT REACTIVE SCHEDULING IN AN AUTOMATED MANUFACTURING ENVIRONMENT

Group Art Unit: 2632

Examiner: Unknown

Attorney Docket: 2000.079600/JAP TT4739

RECEIVED
MAR 3 1 2003
Technology Center 2600

INFORMATION DISCLOSURE STATEMENT

CERTIFICATE OF MAILING 37 CFR 1.8(a)

I hereby certify that this correspondence is being deposited with the United States Postal service with sufficient postage as first class mail in an envelope addressed to: Assistant Commission for Patents, Washington, D.C. 20231, on March 14, 2003.

Yolanda Murillo

Typed or printed name of person signing this certificate

Yolanda Murillo

Signature

BOX PATENT APPLICATION
Assistant Commissioner for Patents
Washington, D.C. 20231

Sir:

In compliance with the duty of disclosure under 37 C.F.R. § 1.56, it is respectfully requested that this Information Disclosure Statement be entered and the documents listed on attached Form PTO-1449 be considered by the Examiner and made of record. Copies of the listed documents required by 37 C.F.R. § 1.98(a)(2) are enclosed for the convenience of the Examiner.

In accordance with 37 C.F.R §§ 1.97(g),(h), this Information Disclosure Statement is not to be construed as a representation that a search has been made, and is not to be construed to be

an admission that the information cited is, or is considered to be, material to patentability as defined in 37 C.F.R. § 1.56(b).

The present Information Disclosure Statement is being filed prior to the receipt of a first Official Action reflecting an examination on the merits, and hence is believed to be timely filed in accordance with 37 C.F.R § 1.97(b). No fees are believed to be due in connection with the filing of this Information Disclosure Statement; however, should any fees under 37 C.F.R. §§ 1.16 to 1.21 be deemed necessary for any reason relating to these materials, the Assistant Commissioner is hereby authorized to deduct said fees from Advanced Micro Devices, Inc. Deposit Account No. 01-0365/TT4739.

Applicants respectfully request that the listed documents be made of record in the present case.

Respectfully submitted,

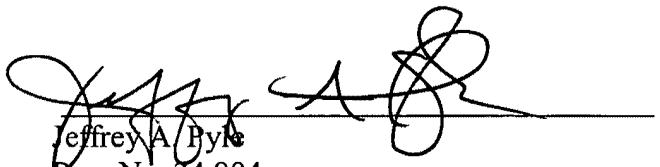

Jeffrey A. Pyle
Reg. No. 34,904

Attorney for Applicant(s)

WILLIAMS, MORGAN & AMERSON
10333 Richmond Dr., Suite 1100
Houston, Texas 77042
(713) 934-7000

Date: March 14, 2003

Petitioner STMICROELECTRONICS, INC.,
Ex. 1006, IPR2022-00681, Pg. 149

Patent Assignment Abstract of Title

Total Assignments: 1

Application #: 10135145 **Filing Dt:** 04/30/2002 **Patent #:** NONE **Issue Dt:**

PCT #: NONE **Publication #:** NONE **Pub Dt:**

Inventors: Gustavo Mata, Steven C. Nettles, Larry D. Barto, Yiwei Li

Title: Agent reactive scheduling in an automated manufacturing environment

Assignment: 1

Reel/Frame:	Received:	Recorded:	Mailed:	Pages:
012861/0239	05/09/2002	04/30/2002	07/09/2002	3

Conveyance: ASSIGNMENT OF ASSIGNORS INTEREST (SEE DOCUMENT FOR DETAILS).

Assignors: MATA, GUSTAVO **Exec Dt:** 04/24/2002

NETTLES, STEVEN C. **Exec Dt:** 04/24/2002

BARTO, LARRY D. **Exec Dt:** 04/24/2002

LI, YIWEI **Exec Dt:** 04/24/2002

Assignee: ADVANCED MICRO DEVICES, INC.
5204 E. BEN WHITE BLVD.
AUSTIN, TEXAS 78741

Correspondent: WILLIAMS, MORGAN & AMERSON, P.C.
JEFFREY A. PYLE
7676 HILLMONT, SUITE 250
HOUSTON, TEXAS 77040

Search Results as of: 8/13/2003 2:52:45 P.M.

If you have any comments or questions concerning the data displayed, contact OPR / Assignments at 703-308-9723
Web interface last modified: Oct. 5, 2002

Petitioner STMICROELECTRONICS, INC.,
Ex. 1006, IPR2022-00681, Pg. 150

UNITED STATES PATENT AND TRADEMARK OFFICE

UNITED STATES DEPARTMENT OF COMMERCE
United States Patent and Trademark Office
Address: COMMISSIONER FOR PATENTS
P.O. Box 1450
Alexandria, Virginia 22313-1450
www.uspto.gov

APPLICATION NO.	FILING DATE	FIRST NAMED INVENTOR	ATTORNEY DOCKET NO.	CONFIRMATION NO.
10/135,145	04/30/2002	Gustavo Mata	2000.079600	5112

23720 7590 08/21/2003

WILLIAMS, MORGAN & AMERSON, P.C.
10333 RICHMOND, SUITE 1100
HOUSTON, TX 77042

EXAMINER
GANDHI, JAYPRAKASH N

ART UNIT	PAPER NUMBER
2125	5

DATE MAILED: 08/21/2003

Please find below and/or attached an Office communication concerning this application or proceeding.

PTO-90C (Rev. 07-01)

PRG

Office Action Summary	Application No. 10/135,145	Applicant(s) MATA ET AL.	
	Examiner Jayprakash N Gandhi	Art Unit 2125	

-- The MAILING DATE of this communication appears on the cover sheet with the correspondence address --

Period for Reply

A SHORTENED STATUTORY PERIOD FOR REPLY IS SET TO EXPIRE 3 MONTH(S) FROM THE MAILING DATE OF THIS COMMUNICATION.

- Extensions of time may be available under the provisions of 37 CFR 1.136(a). In no event, however, may a reply be timely filed after SIX (6) MONTHS from the mailing date of this communication.
- If the period for reply specified above is less than thirty (30) days, a reply within the statutory minimum of thirty (30) days will be considered timely.
- If NO period for reply is specified above, the maximum statutory period will apply and will expire SIX (6) MONTHS from the mailing date of this communication.
- Failure to reply within the set or extended period for reply will, by statute, cause the application to become ABANDONED (35 U.S.C. § 133).
- Any reply received by the Office later than three months after the mailing date of this communication, even if timely filed, may reduce any earned patent term adjustment. See 37 CFR 1.704(b).

Status

1)☒ Responsive to communication(s) filed on 30 April 2002 .

2a)☐ This action is **FINAL**. 2b)☒ This action is non-final.

3)☐ Since this application is in condition for allowance except for formal matters, prosecution as to the merits is closed in accordance with the practice under *Ex parte Quayle*, 1935 C.D. 11, 453 O.G. 213.

Disposition of Claims

4)☒ Claim(s) 1-53 is/are pending in the application.

4a) Of the above claim(s) _____ is/are withdrawn from consideration.

5)☐ Claim(s) _____ is/are allowed.

6)☒ Claim(s) 1-53 is/are rejected.

7)☐ Claim(s) _____ is/are objected to.

8)☐ Claim(s) _____ are subject to restriction and/or election requirement.

Application Papers

9)☐ The specification is objected to by the Examiner.

10)☐ The drawing(s) filed on _____ is/are: a)☐ accepted or b)☐ objected to by the Examiner.

Applicant may not request that any objection to the drawing(s) be held in abeyance. See 37 CFR 1.85(a).

11)☐ The proposed drawing correction filed on _____ is: a)☐ approved b)☐ disapproved by the Examiner.

If approved, corrected drawings are required in reply to this Office action.

12)☐ The oath or declaration is objected to by the Examiner.

Priority under 35 U.S.C. §§ 119 and 120

13)☐ Acknowledgment is made of a claim for foreign priority under 35 U.S.C. § 119(a)-(d) or (f).

a)☐ All b)☐ Some * c)☐ None of:

1.☐ Certified copies of the priority documents have been received.

2.☐ Certified copies of the priority documents have been received in Application No. _____ .

3.☐ Copies of the certified copies of the priority documents have been received in this National Stage application from the International Bureau (PCT Rule 17.2(a)).

* See the attached detailed Office action for a list of the certified copies not received.

14)☐ Acknowledgment is made of a claim for domestic priority under 35 U.S.C. § 119(e) (to a provisional application).

a) ☐ The translation of the foreign language provisional application has been received.

15)☐ Acknowledgment is made of a claim for domestic priority under 35 U.S.C. §§ 120 and/or 121.

Attachment(s)

1) ☒ Notice of References Cited (PTO-892)
2) ☐ Notice of Draftsperson's Patent Drawing Review (PTO-948)
3) ☒ Information Disclosure Statement(s) (PTO-1449) Paper No(s) 4 .
4) ☐ Interview Summary (PTO-413) Paper No(s). _____ .
5) ☐ Notice of Informal Patent Application (PTO-152)
6) ☐ Other: .

Petitioner STMICROELECTRONICS, INC.,
Ex. 1006, IPR2022-00681, Pg. 152

DETAILED ACTION

Claim Rejections - 35 USC § 102

1. The following is a quotation of the appropriate paragraphs of 35 U.S.C. 102 that form the basis for the rejections under this section made in this Office action:

> A person shall be entitled to a patent unless –
>
> (b) the invention was patented or described in a printed publication in this or a foreign country or in public use or on sale in this country, more than one year prior to the date of application for patent in the United States.

2. Claims 1, 12, 19, 26, 33 and 44 are rejected under 35 U.S.C. 102(b) as being anticipated by Kline et al. (U. S. Patent 5,444,632).

Kline discloses a method, computer-readable, and a computer system for scheduling in an automated manufacturing environment as shown figures 1-3, detecting an occurrence (figure 3, 104 to 102), scheduling agent 250 being notified.

Claim Rejections - 35 USC § 103

3. The following is a quotation of 35 U.S.C. 103(a) which forms the basis for all obviousness rejections set forth in this Office action:

> (a) A patent may not be obtained though the invention is not identically disclosed or described as set forth in section 102 of this title, if the differences between the subject matter sought to be patented and the prior art are such that the subject matter as a whole would have been obvious at the time the invention was made to a person having ordinary skill in the art to which said subject matter pertains. Patentability shall not be negatived by the manner in which the invention was made.

4. Claims 2-11, 13-18, 20-25, 27-32, 34-43 and 45-53 are rejected under 35 U.S.C. 103(a) as being unpatentable over Kline.

As stated above Kline discloses all the claimed method as well as computer system for an automated manufacturing environment including in a very broad term an occurrence (status changes, figure 3) except pointing out specific detected occurrence

as claimed by the applicant. Applicant demonstrated no criticality on these elements, so it would have been obvious to one of ordinary skill in the art to make occurrence to be detected as required during different manufacturing stages to correct and optimize overall scheduling system.

Conclusion

5. The prior art made of record and not relied upon is considered pertinent to applicant's disclosure. Weaver et al., Fromherz, and Lin disclose related art.

Any inquiry concerning this communication or earlier communications from the examiner should be directed to Jayprakash N Gandhi whose telephone number is 703-305-7513. The examiner can normally be reached on 6:30-4:00 (1st M-F & 2nd M-Th.).

If attempts to reach the examiner by telephone are unsuccessful, the examiner's supervisor, Leo P Picard can be reached on 703-308-0538. The fax phone number for the organization where this application or proceeding is assigned is (703) 872-9306.

Any inquiry of a general nature or relating to the status of this application or proceeding should be directed to the receptionist whose telephone number is 703-306-5484.

JNGandhi

Jayprakash N Gandhi
Primary Examiner
Art Unit 2125

JNG

Notice of References Cited	Application/Control No. 10/135,145	Applicant(s)/Patent Under Reexamination MATA ET AL.	
	Examiner Jayprakash N Gandhi	Art Unit 2125	Page 1 of 1

U.S. PATENT DOCUMENTS

*		Document Number Country Code-Number-Kind Code	Date MM-YYYY	Name	Classification
	A	US-5,444,632	08-1995	Kline et al.	700/100
	B	US-5,446,671	08-1995	Weaver et al.	700/100
	C	US-5,835,688	11-1998	Fromherz, Markus P. J.	358/1.13
	D	US-6,434,443	08-2002	Lin, Kuo-Chen	700/100
	E	US-			
	F	US-			
	G	US-			
	H	US-			
	I	US-			
	J	US-			
	K	US-			
	L	US-			
	M	US-			

FOREIGN PATENT DOCUMENTS

*		Document Number Country Code-Number-Kind Code	Date MM-YYYY	Country	Name	Classification
	N					
	O					
	P					
	Q					
	R					
	S					
	T					

NON-PATENT DOCUMENTS

*		Include as applicable: Author, Title Date, Publisher, Edition or Volume, Pertinent Pages)
	U	
	V	
	W	
	X	

*A copy of this reference is not being furnished with this Office action. (See MPEP § 707.05(a).)
Dates in MM-YYYY format are publication dates. Classifications may be US or foreign.

Petitioner STMICROELECTRONICS, INC.,
Ex. 1006, IPR2022-00681, Pg. 155

OIPE JC176 MAR 31 2003 PATENT & TRADEMARK OFFICE

Form PTO-1449 (modified)	Atty. Docket No. 2000.079600/TT4739	Serial No. 10/135,145
List of Patents and Publications for Applicant's INFORMATION DISCLOSURE STATEMENT (Use several sheets if necessary)	Applicant(s): Gustavo Mata et al.	
	Filing Date: April 30, 2002	Group: ~~2632~~ 2125

U.S. Patent Documents	Foreign Patent Documents	Other Art
See Page 1	*See Page 1*	*See Pages 2*

U.S. Patent Documents

Exam. Init.	Ref. Des.	Document Number	Date	Name	Class	Sub Class	Filing Date of App.
JNH	A1	SN 10/331,715		Nettles et al.			12/30/02
	A2	SN 10/331,598		Barto et al			12/30/02
	A3	SN 10/331,596		Barto et al.			12/30/02
	A4	SN 10/284,705		Nettles et al			10/31/02
	A5	SN 10/233,197		Barto et al.			8/30/02
	~~A6~~	~~SN 10/232,145~~		Barto et al.			8/30/02
	A7	SN 10/231,930		Barto et al.			8/30/02
	A8	SN 10/231,888		Barto et al.			8/30/02
	A9	SN 10/231,849		Barto et al			8/30/02
	A10	SN 10/231,648		Barto et al			8/30/02
	A11	SN 10/231,561		Barto et al.			8/30/02
	A12	SN 10/190,194		Li et al.			7/3/02
	A13	SN 10/160,990		Mata et al.			5/31/02
	A14	SN 10/160,956		Li et al.			5/31/02
	A15	SN 10/135,145		Mata et al.			4/30/02
	A16	6,202,062	03/13/2001	Cameron et al.	707	3	02/26/1999
	A17	6,148,239	11/14/2000	Funk et al.	700	1	12/12/1997
	A18	5,953,229	09/14/1999	Clark et al.	364	468.06	09/24/1996
	A19	5,548,535	08/20/1996	Zvonar	364	551.01	11/08/1994

RECEIVED
MAR 31 2003
Technology Center 2600

To be replaced by paper # 11

Foreign Patent Documents

Exam. Init.	Ref. Des.	Document Number	Date	Country	Class	Sub Class	Translation Yes/No
	B1						

EXAMINER: JNHandt | DATE CONSIDERED: 8/18/03

EXAMINER: INITIAL IF REFERENCE CONSIDERED, WHETHER OR NOT CITATION IS IN CONFORMANCE WITH MPEP609; DRAW LINE THROUGH CITATION IF NOT IN CONFORMANCE AND NOT CONSIDERED. INCLUDE COPY OF THIS FORM WITH NEXT COMMUNICATION TO APPLICANT.

Petitioner STMICROELECTRONICS, INC.,
Ex. 1006, IPR2022-00681, Pg. 156

OIPE JC PATENT & TRADEMARK OFFICE MAR 31 2003

Form PTO-1449 (modified)	Atty. Docket No. 2000.079600/TT4739	Serial No. 10/135,145
List of Patents and Publications for Applicant's INFORMATION DISCLOSURE STATEMENT (Use several sheets if necessary)	Applicant(s): Gustavo Mata et al.	
	Filing Date: April 30, 2002	Group: ~~2632~~ 2121

U.S. Patent Documents	Foreign Patent Documents	Other Art
See Page 1	*See Page 1*	*See Pages 2*

Other Art (Including Author, Title, Date Pertinent Pages, Etc.)

Exam. Init.	Ref. Des.	Citation
JNR	C1	Resende, "Shop Floor Scheduling of Semiconductor Wafer Manufacturing," *University of California, Berkeley* (1987)
	C2	Glassey et al., "Closed-Loop Job Release Control for VLSI Circuit Manufacturing," *IEEE Transactions on Semiconductor Manufacturing* 1:36-46 (1988)
	C3	"Agent-Enhanced Manufacturing System Initiative," *Technologies for the Integration of Manufacturing Applications (TIMA)* (October 1997)
	C4	TBD, Classification of Approach
	C5	"Factory Integration," *The National Technology Roadmap for Semiconductors: Technology Needs* (1997)
	C6	SALSA Enhancements for next Swarm Release (April 22, 1999)
	C7	SALSA Exceptions—Minutes from 5/11/99
	C8	Starvation Avoidance Lot Start Agent (SALSA) (Overview: 4-15-99)
	C9	Starvation Avoidance Lot Start Agent, *Fab25 AEMSI/SALSA Review Meeting* (5/26/99)
	C10	Starvation Avoidance Lot Start Agent, *Iteration 1 Requirements Kickoff* (5/3/99)
	C11	Van Parunak, "Review of Axtell and Epstein" (6/23/99)
	C12	Baumgärtel et al., "Combining Multi-Agent Systems and Constraint Techniques in Production Logistics" (1996)
	C13	Bonvik et al., "Improving a Kanban Controlled Production Line Through Rapid Information Dissemination" (July 10, 1995)
	C14	Burke et al., "The Distributed Asynchronous Scheduler," pp. 309-339
	C15	Butler et al., "ADDYMS: Architecture for Distributed Dynamic Manufacturing Scheduling," pp. 199-213
	C16	Fordyce et al., "Integrating Decision Technologies for Dispatch Scheduling in Semiconductor Manufacturing," *Logistics Management System (LMS)*, pp. 473-516
	C17	Hynynen, "BOSS: An Artificially Intelligent System for Distributed Factory Scheduling," *Computer Applications in Production and Engineering*, pp. 667-677 (1989)
	C18	Interrante et al., "Emergent Agent-Based Scheduling of Manufacturing Systems"
JNR	C19	Juba et al., "Production Improvements Using a Forward Scheduler "

RECEIVED
MAR 3 1 2003
Technology Center 2600

EXAMINER: JNRandle	DATE CONSIDERED: 8/18/03

EXAMINER: INITIAL IF REFERENCE CONSIDERED, WHETHER OR NOT CITATION IS IN CONFORMANCE WITH MPEP609; DRAW LINE THROUGH CITATION IF NOT IN CONFORMANCE AND NOT CONSIDERED. INCLUDE COPY OF THIS FORM WITH NEXT COMMUNICATION TO APPLICANT.

Petitioner STMICROELECTRONICS, INC.,
Ex. 1006, IPR2022-00681, Pg. 157

OIPE JC176 MAR 31 2003 PATENT & TRADEMARK OFFICE

Form PTO-1449 (modified)	Atty. Docket No. 2000.079600/TT4739	Serial No. 10/135,145
List of Patents and Publications for Applicant's INFORMATION DISCLOSURE STATEMENT (Use several sheets if necessary)	Applicant(s): Gustavo Mata et al.	
	Filing Date: April 30, 2002	Group: ~~2632~~ 2125

U.S. Patent Documents	Foreign Patent Documents	Other Art
See Page 1	*See Page 1*	*See Pages 2*

Other Art (Including Author, Title, Date Pertinent Pages, Etc.)

Exam. Init.	Ref. Des.	Citation
JNE	C20	Li et al., "Minimum Inventory Variability Schedule with Applications in Semiconductor Fabrication," *IEEE Transactions on Semiconductor Manufactuing* 9:145-149 (1996)
	C21	Lin et al., "Integrated Shop Floor Control Using Autonomous Agents," *IIE Transactions* 24:57-71 (1992)
	C22	Lu et al., "Efficient Scheduling Policies to Reduce Mean and Variance of Cycle-Time in Semiconductor Manufacturing Plants," *IEEE Transactions Semiconductor Manufacturing* 7:374-388 (1994)
	C23	Martin-Vega et al., "Applying Just-In-Time in a Wafer Fab: A Case Study," *IEEE Transactions on Semiconductor Manufacturing* 2:16-22 (1989)
	C24	Murthy et al., "Agent Based Cooperative Scheduling," pp. 112-117
	C25	Van Parunak et al., "Agents Do It In Time—Experiences with Agent-Based Manufacturing Scheduling" (1999)
	C26	Van Parunak et al., "Agent-Based Models & Manufacturing Processes"
	C27	Ramos et al., "Scheduling Manufacturing Tasks Considering Due Dates: A New Method Based on Behaviours and Agendas"
	C28	Shen et al., "An Agent-Based Approach for Dynamic Manufacturing Scheduling"
	C29	Hollister, "Schedule Paper #17 Summary" (June 23, 1999)
	C30	Hollister, "Schedule Paper #19 Summary" (June 23, 1999)
	C31	Hollister, "Schedule Paper #23 Summary" (June 23, 1999)
	C32	Hollister, "Schedule Paper #32 Summary" (June 23, 1999)
	C33	Vaario et al., "An Emergent Modelling Method for Dynamic Scheduling," *Journal of Intelligent Manufacturing* 9:129-140 (1998)
	C34	Wellman et al., "Auction Protocols for Decentralized Scheduling" (May 22, 1998)
	C35	Weber, "Material Traceability—The Missing Link in TAP Systems," *Test, Assembly and Packaging Automation and Integration '99 Conference*
	C36	"ObjectSpace Fab Solutions Semiconductor Product Development Overview" (presented at SEMICON Southwest 1998)
↓	C37	"Agent Enhanced Manufacturing Systems Initiative (AEMSI) Project" (presented by Dan Radin, ERIM CEC November 12-13, 1998)

RECEIVED
MAR 31 2003
Technology Center 2600

EXAMINER:	DATE CONSIDERED:
	8/18/03

EXAMINER: INITIAL IF REFERENCE CONSIDERED, WHETHER OR NOT CITATION IS IN CONFORMANCE WITH MPEP609; DRAW LINE THROUGH CITATION IF NOT IN CONFORMANCE AND NOT CONSIDERED. INCLUDE COPY OF THIS FORM WITH NEXT COMMUNICATION TO APPLICANT.

Petitioner STMICROELECTRONICS, INC.,
Ex. 1006, IPR2022-00681, Pg. 158

O I P E JC176 MAR 31 2003 PATENT & TRADEMARK OFFICE

Form PTO-1449 (modified)	Atty. Docket No. 2000.079600/TT4739	Serial No. 10/135,145
List of Patents and Publications for Applicant's INFORMATION DISCLOSURE STATEMENT (Use several sheets if necessary)	Applicant(s): Gustavo Mata et al.	
	Filing Date: April 30, 2002	Group: ~~2632~~ 2125

U.S. Patent Documents	Foreign Patent Documents	Other Art
See Page 1	*See Page 1*	*See Pages 2*

Other Art (Including Author, Title, Date Pertinent Pages, Etc.)

Exam. Init.	Ref. Des.	Citation
JNR	C38	Weber, "APC Framework: Raising the Standard for Fab Automation and Integration," *Equipment Automation Conference 1st European Symposium on Semiconductor Manufacturing* (April 14, 1999)
	C39	Wein, "Scheduling Semiconductor Wafer Fabrication," *IEEE Transactions on Semiconductor Manufacturing* 1:115-130 (1988)
	C40	Bonvik, "Performance Analysis of Manufacturing Systems Under Hybrid Control Policies" (September 22, 1995)
	C41	Bonvik, "Performance Analysis of Manufacturing Systems Under Hybrid Control Policies" (October 3, 1995)
	C42	Sikora et al., "Coordination Mechanisms for Multi-Agent Manufacturing Systems: Applications to Integrated Manufacturing Scheduling," *IEEE Transactions on Engineering Management* 44:175-187 (1997)
	C43	Sousa et al., "A Dynamic Scheduling Holon for Manufacturing Orders," *Journal of Intelligent Manufacturing* 9:107-112 (1998)
	C44	Upton et al., "Architectures and Auctions in Manufacturing," *Int. J. Computer Integrated Manufacturing* 4:23-33 (1991)
	C45	Fordyce et al., "Logistics Management System (LMS): An Advanced Decision Support System for the Fourth Decision Tier-Dispatch or Short Interval Scheduling,", pp. 1-58
	C46	Gere, "Heuristics in Job Shop Scheduling," *Management Science* 13:167-190 (1966)
	C47	Ehteshami et al., "Trade-Offs in Cycle Time Management: Hot Lots," *IEEE Transactions on Semiconductor Manufacturing* 5:101-106 (1992)
Y	C48	Axtell et al., "Distributed Computation of Economic Equilibria via Bilateral Exchange" (March 1997)

RECEIVED
MAR 31 2003
Technology Center 2600

EXAMINER: JNRandh	DATE CONSIDERED: 8/18/03

EXAMINER: INITIAL IF REFERENCE CONSIDERED, WHETHER OR NOT CITATION IS IN CONFORMANCE WITH MPEP609; DRAW LINE THROUGH CITATION IF NOT IN CONFORMANCE AND NOT CONSIDERED. INCLUDE COPY OF THIS FORM WITH NEXT COMMUNICATION TO APPLICANT.

Petitioner STMICROELECTRONICS, INC.,
Ex. 1006, IPR2022-00681, Pg. 159

OIPE JC10 AUG 28 2003 PATENT & TRADEMARK OFFICE

#9
2632
12-9-03

WILLIAMS, MORGAN & AMERSON, P.C.
10333 RICHMOND, STE. 1100, HOUSTON, TEXAS 77042
(713) 934-7000 FAX: (713) 934-7011

Danny L. Williams
Terry D. Morgan
J. Mike Amerson
Kenneth D. Goodman
Jeffrey A. Pyle
Jaison C. John
Ruben S. Bains
Scott F. Diring†

†Licensed in Wisconsin, not licensed in Texas

Shelley P.M. Fussey, Ph.D.*
Mark D. Moore, Ph.D.*
Raymund F. Eich, Ph.D.*
Daren C. Davis*
Stephanie A. Wardwell, Ph.D.*
Mark W. Sincell, Ph.D.*

*Patent Agent

RECEIVED
SEP 0 3 2003
Technology Center 2600

WRITER'S DIRECT DIAL:
(713) 934-4053

FILE: 2000.079600/JAP

August 26, 2003

Commissioner for Patents
P.O. Box 1450
Alexandria, VA 22313-1450

CERTIFICATE OF MAILING
37 C.F.R. § 1.8

I hereby certify that this correspondence is being deposited with the U.S. Postal Service with sufficient postage as First Class Mail in an envelope addressed to: Commissioner for Patents, P.O. Box 1450, Alexandria, VA 22313-1450, on the date below:

August 26, 2003 — Date
Yolanda Murillo — Yolanda Murillo

RE: *U.S. Patent Application Serial No. 10/135,145*
Entitled: "AGENT REACTIVE SCHEDULING IN AN AUTOMATED MANUFACTURING ENVIRONMENT"
Inventor(s): GUSTAVO MATA ET AL.
Client Reference: TT4739

Sir:

Enclosed for filing in the above-referenced patent application is a Supplemental Information Disclosure Statement, PTO-Form 1449 and references (A1-A5).

No fees are believed to be due in connection with the filing of this Supplemental Information Disclosure Statement, however, should any fees under 37 C.F.R. §§ 1.16 to 1.21 be deemed necessary for any reason relating to the enclosed materials, the Assistant Commissioner is hereby authorized to deduct said fees from Advanced Micro Devices, Inc. Deposit Account No. 01-0365/TT4739.

Please date stamp and return the enclosed postcard evidencing receipt of these materials.

Customer No. 23720

Respectfully submitted,

Jeffrey A. Pyle
Reg. No. 34,904

JAP:ym
Encl.

OIPE JC109
SEP 0 8 2003
PATENT & TRADEMARK OFFICE

2/25

PATENT

IN THE UNITED STATES PATENT AND TRADEMARK OFFICE

In re Application of:
GUSTAVO MATA ET AL.

Serial No.: 10/135,145

Filed: APRIL 30, 2002

For: AGENT REACTIVE SCHEDULING IN AN AUTOMATED MANUFACTURING ENVIRONMENT

Group Art Unit: 2125

Examiner: JAYPRAKASH N. GANDHI

Atty. Dkt. No.: 2000.079600/TAP

RECEIVED
SEP 0 9 2003
Technology Center 2100

RESPONSE TO OFFICE ACTION DATED AUGUST 21, 2003

Commissioner for Patents
P.O. Box 1450
Alexandria, VA 22313-1450

CERTIFICATE OF MAILING 37 CFR 1.8

I hereby certify that this correspondence is being deposited with the United States Postal Service with sufficient postage as first class mail in an envelope addressed to: Commissioner for Patents, P.O. Box 1450, Alexandria, VA 22313-1450, on September 5, 2003.

Yolanda Murillo
Yolanda Murillo

Sir:

This paper is submitted in response to the Office Action dated August 21, 2003, ("Paper No. 5") for which the three-month date for response is November 21, 2003.

It is believed that no fee is due; however, should any fees under 37 C.F.R. §§ 1.16 to 1.21 be required for any reason, the Assistant Commissioner is authorized to deduct said fees from Advanced Micro Devices, Inc. Deposit Account No. 01-0365/TT4739.

Reconsideration of the application is respectfully requested in light of the arguments presented below.

REMARKS

Claims 1-53 remain pending in the case, and all were rejected in Paper No. 5. More particularly, Paper No. 5 rejected:

- claims 1, 12, 19, 26, 33, and 44 as anticipated under 35 U.S.C. § 102 (b) by United States Letters Patent 5,444,632 ("Kline, *et al.*"); and
- claims 2-11, 13-18, 20-25, 27-32, 34-43, and 45-53 as obvious under 35 U.S.C. § 103 (a) over Kline, *et al.*

Applicants traverse each of the rejections. Paper No. 5 failed to indicate whether the drawings have been accepted, and applicants request clarification of that issue.

I. CLAIMS 1, 12, 19, 26, AND 33 ARE NOVEL OVER KLINE, *ET AL.*

Paper No. 5 rejected claims 1, 12, 19, 26, 33, and 44 as anticipated under 35 U.S.C. § 102 (b) by United States Letters Patent 5,444,632 ("Kline, *et al.*"). Applicants traverse this rejection as predicated on a misconstruction of Kline, *et al.* and assert that the claims are novel over a proper construction of Kline, *et al.* Furthermore, Applicants respectfully submit that the rejection fails to *prima facie* establish that the claims are anticipated.

A. The Rejections are Predicated on a Misconstruction of Kline, *et al.*

In rejecting claims 1, 12, 19, 26, 33, and 44 as anticipated under 35 U.S.C. § 102 (b) by United States Letters Patent 5,444,632 ("Kline, *et al.*"), Paper No. 5 stated only that:

> Kline discloses a method, computer-readable, and a computer system for scheduling in an automated manufacturing environment as shown figures 1-3, detecting an occurrence (figure 3, 104 to 102), scheduling agent 250 being notified.

Detailed Action, p. 2, ¶ 2. Thus, the Office incorrectly equates the relationship between the wafer specification module 104 and the schedule interpreter 102 in Figure 3 with "detecting an occurrence of a predetermined event" and the scheduling agent 250 with the "software scheduling agent(s)" recited in the claims.

The relationship between the wafer specification module 104 and the schedule interpreter 102 in Figure 3 is described in the specification:

> Additionally, the scheduler module 110 is connected to the wafer specification module 104 in order to receive data, for example, the

> sequence of steps, for example pattern, etch, deposit, etc. for the lot in the factory in terms of various process resources in order to transform for example the raw unprocessed wafers into completed wafers.

Col. 4, lines 38-45. Subsequent discussions of the role of the wafer specification module 104 support this characterization, of the wafer specification module as an information provider. (col. 4, lines 63-68; col. 7, lines 10-16; and col. 7, lines 27-30) Thus, the only reasonable construction is that the wafer specification module 104 is simply a repository of wafer specifications.

Presumably, the Office relies on the legend "STATUS CHANGES (HOLD SCRAP)" in Figure 3 for its incorrect construction. However, nothing in Kline, *et al.* supports the Office's inference that the legend teaches detection of an event, as opposed to, for example, teaching the kinds of wafer specifications that might be stored in Kline, *et al.* The specification contains no explanation of this legend. The Office's inference is actually contrary to the rest of Kline, *et al.* The teachings of a prior art reference must be taken as a whole when evaluating obviousness rather than considered in bits and pieces. *Panduit Corp. v. Dennison Mfg. Co.*, 1 U.S.P.Q.2d (BNA) 1593, 1597 (Fed. Cir.), *cert. denied*, — U.S. —, 107 S. Ct. 2187 (1987). As established above, when Kline, et al. is taken as a whole, it fails to teach that the wafer specification module 104 is anything other than an information provider. Accordingly, Applicants respectfully submit that the Office's inference is in fact an exercise of hindsight bootstrapped from Applicants' own disclosure.

In addition to the misconstruction of the wafer specification module 104, the Office has misconstrued the element 250 in Kline, *et al.* The Office in Paper No. 5 clearly identifies the element 250 as a "scheduling agent." However, Figure 1 just as clearly labels the element 250 a workstation, which is described in col. 4, at lines 27-33 with respect to Figure 2 as a computing apparatus operated by a user. Furthermore, the workstation 250 is unambiguously identified as but a part of the scheduler module 110. Presumably, the scheduler module 110, as a whole, possesses the functionality that the Office associates with the "software scheduling agent(s)" recited in the claims. If so, the scheduler module 110 cannot rationally be construed as a "software scheduling agent" since it includes not only significant hardware components as illustrated in Figure 1, but a user as illustrated in Figure 2. Even if the Office maintains that the workstation 250 is a "scheduling agent," it cannot be a "software scheduling agent" since it includes a user and significant hardware components. Since the Office's construction of the

Petitioner STMICROELECTRONICS, INC.,
Ex. 1006, IPR2022-00681, Pg. 164

workstation 250 is contrary to the actual disclosure of Kline, *et al.*, Applicants' respectfully submit that this misconstruction also arises in hindsight from Applicants' disclosure.

The Office's rejection of claims 1, 12, 19, 26, 33, and 44 as anticipated under 35 U.S.C. § 102 (b) by United States Letters Patent 5,444,632 ("Kline, *et al.*") is therefore predicated on two major misconstructions of Kline, *et al.* As is set forth above, Applicants believe these misconstructions arise from hindsight interpretation of Kline, *et al.* in light of Applicants' disclosure. As is set forth below, upon proper construction, Kline, *et al.* fails to disclose every element of Applicants' invention. Applicants therefore respectfully submit that the anticipation rejection of claims 1, 12, 19; 26, 33, and 44 is improvident and request that it be withdrawn.

B. Claims 1, 12, 19, 26, and 33 are Novel Over a Proper Construction of Kline, *et al.*

Claims 1, 12, 19, 26, 33, and 44 are novel over Kline, *et al.* when Kline, *et al.* is properly construed. In particular, Kline, *et al.* fails to disclose the limitation "software scheduling agent(s)", recited in the singular or the plural in each of the independent claims[1]. *See* cl. 1, at line 4; cl. 12, line 5; cl. 19, line 4; cl. 26, line 4; cl. 33, line 3; and cl. 44, at line 4. Applicants described "software scheduling agents" in their specification at p. 10, lines 13-31:

> Referring now to **FIG. 1** and **FIG. 2**, the software agents 265 each represent some "manufacturing domain entity," *e.g.*, a lot 130, a process tool 115, a resource, a PM, or a Qual. ...The software agents 265, collectively, are responsible for efficiently scheduling and controlling the lots 130 of wafers 135 through the fabrication process.
>
> ...Of particular interest to the present invention, the software agents 265 reactively schedule, initiate, and execute activities on behalf of their respective manufacturing domain entities.

Thus, "software scheduling agents" possess three characteristics:

- as the phrase implies, they are implemented in software;
- they represent some respective manufacturing domain entity; and

[1] Applicants note that other limitations are also not shown. However, a single such deficiency is sufficient to obviate the anticipation rejection. In re Bond, 15 U.S.P.Q. 2d (BNA) 1566, 1567 (Fed. Cir. 1997) (an anticipating reference must disclose every limitation of the claim).

Petitioner STMICROELECTRONICS, INC.,
Ex. 1006, IPR2022-00681, Pg. 165

they reactively schedule.

When Kline, *et al.* is properly construed, it fails to disclose this limitation of each of the independent claims.

Applicants' review of Kline, *et al.* fails to identify any "software scheduling agent." In general, the scheduling functionality is performed by the scheduler module 110, which is implemented in hardware as well as software. (col. 4, lines 3-33) Furthermore, the software components involved in scheduling do not represent respective manufacturing domain entities, but rather operate across the whole fab. (col. 4, line 57 to col. 6, line 48; Figure 4) Kline, *et al.* does disclose one object that it labels an "agent," but it merely provides and/or obtains information and does not schedule. (col. 7, lines 16-58) As established above, the workstation 250 identified in Paper No. 5 as a "scheduling agent" is not a "software scheduling agent" because it is implemented not only in hardware, but also includes a human user. (col. 4, lines 7-33; Figure 1 – Figure 2)

C. The Office Failed to Establish *Prima Facie* That Claims 1, 12, 19, 26, and 33 are Anticipated

"It is by now well settled that the burden of establishing a *prima facie* case of anticipation resides with the Patent and Trademark Office. *In re Piasecki*, 745 F.2d 1468, 1472, 223 U.S.P.Q. 785, 788 (Fed. Cir. 1984) quoting *In re Warner*, 379 F.2d 1011, 1016, 154 U.S.P.Q. 173, 177 (C.C.P.A. 1967); *Ex parte Skinner*, 2 U.S.P.Q.2d (BNA) 1788, 1788-89 (Bd. Pat. App. & Int. 1987). In doing so, "...it is incumbent upon the [Office] to identify wherein each and every facet of the claimed invention is disclosed in the applied reference." *Ex parte Levy*, 17 U.S.P.Q.2d (BNA) 1461, 1462 (Pat. & Tm. Off. Bd. Pat. App. & Int. 1990). However, the Office's rejection fell short of this standard.

In rejecting claims 1, 12, 19, 26, 33, and 44 as anticipated under 35 U.S.C. § 102 (b) by United States Letters Patent 5,444,632 ("Kline, *et al.*"), Paper No. 5 stated only that:

> Kline discloses a method, computer-readable, and a computer system for scheduling in an automated manufacturing environment as shown figures 1-3, detecting an occurrence (figure 3, 104 to 102), scheduling agent 250 being notified.

Detailed Action, p. 2, ¶ 2. Applicants respectfully submit that this rejection fails in that it:

Petitioner STMICROELECTRONICS, INC.,
Ex. 1006, IPR2022-00681, Pg. 166

- fails to identify where Kline, *et al.* discloses "notifying a software scheduling agent of the occurrence" as recited in cl. 1, at line 4; cl. 12, line 5; cl. 19, line 4; cl. 23, by virtue of its dependence from cl. 19; and cl. 26, line 4;
- fails to explain how the relationship between the wafer specification module 104 and the schedule interpreter 102 in Figure 3 constitutes "detecting an occurrence of a predetermined event" as recited in cl. 1, at line 3; cl. 12, line 4; cl. 19, line 3; cl. 23, by virtue of its dependence from cl. 19; and cl. 26, line 3; when that relationship is described in the specification as simply transferring stored information regarding wafer specifications at col. 4, lines 38-45;
- fails to identify a "*software* scheduling agent" or agents as recited in cl. 1, at line 4; cl. 12, line 5; cl. 19, line 4; cl. 23, by virtue of its dependence from cl. 19; and cl. 26, line 4; cl. 33, line 3; and cl. 44, at line 4;
- fails even to allege that, must less identify where, Kline, *et al.* teaches scheduling responsive to the detection of the event as recited in cl. 1, at lines 5-6; cl. 12, lines 6-7; cl. 19, lines 5-6; cl. 23, by virtue of its dependence from cl. 19; and cl. 26, lines 5-6; cl. 33, lines 5-6; and cl. 44, at lines 6-7; or
- fails even to allege that, must less identify where, Kline, *et al.* teaches any of the limitations recited in cl. 23 over and above the limitations of cl. 23 incorporated from cl. 19 by virtue of its dependence therefrom.

Applicants therefore respectfully submit that the Office has failed to meet the standard of *Ex parte Levy* and, hence, has failed to establish that Kline, *et al.* anticipates claims 1, 12, 19, 26, 33, and 44.

II. CLAIMS 2-11, 13-18, 20-25, 27-32, 34-43, and 45-53 ARE ALLOWABLE UNDER 35 U.S.C. § 103 (a) OVER KLINE, ET AL.

The Office rejected claims 2-11, 13-18, 20-25, 27-32, 34-43, and 45-53 as obvious under 35 U.S.C. § 103 (a) over Kline, *et al.* The relevant inquiry is whether the prior art suggests the invention and whether the prior art would have provided one of ordinary skill in the art with a reasonable expectation of success. *In re O'Farrell*, 7 USPQ2d 1673 (Fed. Cir. 1988). Both the suggestion and the reasonable expectation of success must be founded in the prior art and not in the Applicant's disclosure. *In re Vaeck*, 20 USPQ2d 1438 (Fed. Cir. 1991). Applicants

Petitioner STMICROELECTRONICS, INC.,
Ex. 1006, IPR2022-00681, Pg. 167

respectfully submit that this rejection fails for three reasons. First, Kline, *et al.* fails to teach or suggest all of the limitations of the claims. Second, the rejection relies on the misconstruction of Kline, *et al.* discussed above, bootstrapped from Applicants' disclosure. Third, the rejection employs the wrong standard for "obviousness" and impermissibly shifts the burden to Applicants to establish *prima facie* the non-obviousness of the claims.

A. Kline, *et al.* Fails to Teach or Suggest All the Limitations of the Claims

Kline, *et al.* fails to teach or suggest all the limitations of claims 2-11, 13-18, 20-25, 27-32, 34-43, and 45-53. Each of the independent claims 1, 12, 19, 26, 33, and 44 each recite "software scheduling agent(s)" in either the singular or the plural. Each of claims 2-11, 13-18, 20-25, 27-32, 34-43, and 45-53 are also limited by this recitation through their dependence from one of these independent claims. 35 U.S.C. § 112, ¶ 4. As established above, Kline, *et al.* does not teach or suggest the use of "software scheduling agents." Thus, Kline, *et al.* fails to teach or suggest all the limitations of claims 2-11, 13-18, 20-25, 27-32, 34-43, and 45-53.

B. The Rejection Relies on a Misconstruction of Kline, *et al.*

The rejection relies on one of the misconstructions of Kline, *et al.* discussed above. Paper No. 5 states:

> As stated above Kline discloses all the claimed method as well as computer system for an automated manufacturing environment including in a very broad term an occurrence (status changes, figure 3) except point out specific detected occurrence as claimed by applicant.

Detailed Action, pp. 2-3, ¶ 4. As Applicants established above, this is a misconstruction of the relationship between the wafer specification module 104 and the schedule interpreter 102 in Figure 3. The wafer specification module 104 is clearly an information repository providing information when asked. (col. 4, lines 38-45, 63-68; col. 7, lines 10-16; and col. 7, lines 27-30) Nothing in Kline, *et al.* supports the inference that the legend teaches detection of an event, as opposed to, for example, teaching the kinds of wafer specifications that might be stored in Kline, *et al.* The specification contains no explanation of this legend.

The Office's inference is actually contrary to the rest of Kline, *et al.* The teachings of a prior art reference must be taken as a whole when evaluating obviousness rather than considered

Petitioner STMICROELECTRONICS, INC.,
Ex. 1006, IPR2022-00681, Pg. 168

in bits and pieces. *Panduit Corp. v. Dennison Mfg. Co.*, 1 U.S.P.Q.2d (BNA) 1593, 1597 (Fed. Cir.), *cert. denied*, — U.S. —, 107 S. Ct. 2187 (1987). Accordingly, Applicants respectfully submit that the Office's inference is in fact an exercise of hindsight bootstrapped from Applicants' own disclosure.

C. The Rejection Employs the Wrong Standard for Obviousness and Improperly Shifts the Burden to Applicants to Prove Non-Obviousness

The rejection also employs the wrong standard for "obviousness" and improperly shifts the burden to Applicants to prove "non-obviousness." Paper No. 5, in rejecting claims 2-11, 13-18, 20-25, 27-32, 34-43, and 45-53 as obvious, stated:

> Applicant demonstrated no criticality on these elements, so it would have been obvious to one of ordinary skill in the art to make occurrence to be detected as required during different manufacturing stage to correct and optimize overall scheduling system.

Detailed Action, pp. 2-3, ¶ 4. "Criticality" is the wrong standard for obviousness whose application is reversible error. *Cf., inter alia, In re Clinton*, 188 U.S.P.Q. (BNA) 365, 367 (C.C.P.A. 1976); *In re Dow Chem. Co.*, 5 U.S.P.Q.2d (BNA) 1529, 1532 (Fed. Cir. 1989); *In re Fine*, 5 U.S.P.Q.2d (BNA) 1596 (Fed. Cir. 1988); *In re Antoine*, 195 U.S.P.Q. 6 (C.C.P.A. 1977); *In re Tomlinson*, 150 U.S.P.Q. 623 (C.C.P.A. 1966).

Admittedly, "criticality" can sometimes be an issue in an obvious determinations:

> Applicants can rebut a prima facie case of obviousness based on overlapping ranges by showing the criticality of the claimed range. "The law is replete with cases in which the difference between the claimed invention and the prior art is some range or other variable within the claims. . . . In such a situation, the applicant must show that the particular range is critical, generally by showing that the claimed range achieves unexpected results relative to the prior art range." *In re Woodruff*, 919 F.2d 1575, 16 USPQ2d 1934 (Fed. Cir. 1990).

M.P.E.P. § 2144.05. Note, however, that "criticality" is an issue in *rebuttal* of a *prima facie* case. The *prima facie* case, in this instance, is the disclosure of a claimed range of values by a range already in the prior art:

> In the case where the claimed ranges "overlap or lie inside ranges disclosed by the prior art" a *prima facie* case of obviousness exists. Similarly, a *prima facie* case of obviousness exists where

Petitioner STMICROELECTRONICS, INC.,
Ex. 1006, IPR2022-00681, Pg. 169

> the claimed ranges and prior art ranges do not overlap but are close enough that one skilled in the art would have expected them to have the same properties.
>
> "[A] prior art reference that discloses a range encompassing a somewhat narrower claimed range is sufficient to establish a prima facie case of obviousness." However, if the reference's disclosed range is so broad as to encompass a very large number of possible distinct compositions, this might present a situation analogous to the obviousness of a species when the prior art broadly discloses a genus.

M.P.E.P. § 2144.05 (citations omitted). Applicants are not trying to claim any range of values in any of claims 2-11, 13-18, 20-25, 27-32, 34-43, and 45-53, and so "criticality" is not an issue.

In essence, the Office is impermissibly attempting to shift the burden to Applicants. Paper No. 5, relying on the misconstruction discussed above, admits that Kline, *et al.* fails to "...[point] out specific detected occurrence as claimed by Applicant. Detailed Action, pp. 2-3, ¶ 4. Thus, even an analogy to the range cases in which criticality is an issue would be inapposite *because they require a teaching or suggestion in the prior art of the claimed limitation,* which the Office admits is not present. The Office is essentially requiring Applicants to produce secondary indicia of non-obviousness when the obviousness of the claims has not yet been *prima facie* established. Thus, the Office is impermissibly shifting its burden to *prima facie* establish the obviousness of the claims to Applicant to prove *prima facie* the non-obviousness of the claims. Applicants respectfully submit that the obvious rejection is improvident and should be withdrawn.

CONCLUSION

Applicants do not amend the claims, and traverse each of the rejections. Applicants traverse the rejection of claims 1, 12, 19, 26, 33, and 44 as anticipated under 35 U.S.C. § 102 (b) by United States Letters Patent 5,444,632 ("Kline, *et al.*") because:

- the rejection relies on a misconstruction of Kline, *et al.* bootstrapped from Applicants' own disclosure;
- when Kline, *et al.* is properly construed, it fails to disclose all the limitations of the claims; and
- the *prima facie* case is deficient because the Office has failed to identify where Kline, *et al.* allegedly teaches the limitations of the various claims.

Petitioner STMICROELECTRONICS, INC.,
Ex. 1006, IPR2022-00681, Pg. 170

Applicants traverse the rejection of claims 2-11, 13-18, 20-25, 27-32, 34-43, and 45-53 as obvious under 35 U.S.C. § 103 (a) over Kline, *et al.* because:

- when properly construed, Kline, et al. does not teach or suggest all the limitations of the claims;
- it relies on the same misconstruction of Kline, et al. upon which the anticipation rejections rely; and
- it employs the wrong standard for "obviousness" and impermissibly shifts the burden to Applicants to establish *prima facie* the non-obviousness of the claims.

Applicants therefore respectfully submit that the claims are allowable and that the application is in condition for allowance. Accordingly, Applicants request that the application be allowed to issue.

The Examiner is invited to contact the undersigned attorney at (713) 934-4053 with any questions, comments or suggestions relating to the referenced patent application.

Respectfully submitted,

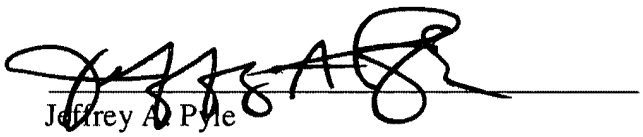

Jeffrey A. Pyle
Reg. No. 34,904

Attorney for Applicants

WILLIAMS, MORGAN & AMERSON
CUSTOMER NUMBER: 23720

10333 Richmond Dr., Suite 1100
Houston, Texas 77042
(713) 934-7000

Date: September 5, 2003

Petitioner STMICROELECTRONICS, INC.,
Ex. 1006, IPR2022-00681, Pg. 171

OIPE JC95 OCT 28 2003 PATENT & TRADEMARK OFFICE

2125
#2
12-3-03

WILLIAMS, MORGAN & AMERSON, P.C.
10333 RICHMOND, STE. 1100, HOUSTON, TEXAS 77042
(713) 934-7000 FAX: (713) 934-7011

Danny L. Williams
Terry D. Morgan
J. Mike Amerson
Kenneth D. Goodman
Jeffrey A. Pyle
Jaison C. John
Ruben S. Bains
Scott F. Diring†

Shelley P.M. Fussey, Ph.D.*
Mark D. Moore, Ph.D.*
Raymund F. Eich, Ph.D.*
Daren C. Davis*
Stephanie A. Wardwell, Ph.D.*
Mark W. Sincell, Ph.D.*

*Patent Agent

†Licensed in Wisconsin, not licensed in Texas

WRITER'S DIRECT DIAL:
(713) 934-4053

RECEIVED
OCT 30 2003
Technology Center 2100

FILE: 2000.079600/JAP

October 23, 2003

Commissioner for Patents
P.O. Box 1450
Alexandria, VA 22313-1450

CERTIFICATE OF MAILING
37 C.F.R. § 1.8

I hereby certify that this correspondence is being deposited with the U.S. Postal Service with sufficient postage as First Class Mail in an envelope addressed to: Commissioner for Patents, P.O. Box 1450, Alexandria, VA 22313-1450, on the date below:

October 23, 2003
Date

Yolanda Murillo
Yolanda Murillo

RE: *U.S. Patent Application Serial No. 10/135,145*
Entitled: "AGENT REACTIVE SCHEDULING IN AN AUTOMATED MANUFACTURING ENVIRONMENT"
Inventor(s): GUSTAVO MATA ET AL.
Client Reference: TT4739

Sir:

Enclosed for filing in the above-referenced patent application is a Supplemental Information Disclosure Statement, PTO-Form 1449 and references (A1-A3 and C1).

No fees are believed to be due in connection with the filing of this Supplemental Information Disclosure Statement, however, should any fees under 37 C.F.R. §§ 1.16 to 1.21 be deemed necessary for any reason relating to the enclosed materials, the Assistant Commissioner is hereby authorized to deduct said fees from Advanced Micro Devices, Inc. Deposit Account No. 01-0365/TT4739.

In accordance with 37 C.F.R § 1.97(e)(1), Applicants hereby certify that each item of information contained in this Supplemental Information Disclosure Statement was cited in a communication from a foreign patent office in a counterpart foreign application not more than three months prior to the filing of the present statement, as evidenced by the date of the enclosed search report.

Applicants respectfully request that the listed documents be made of record in the present case.

Please date stamp and return the enclosed postcard evidencing receipt of these materials.

Customer No. 23720

Respectfully submitted,

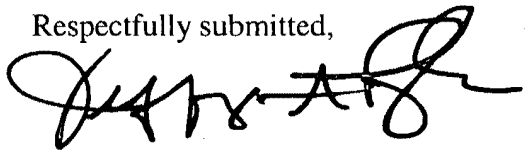

Jeffrey A. Pyle
Reg. No. 34,904

JAP:ym
Encl.

OIPE
NOV 2 6 2003
PATENT & TRADEMARK OFFICE 1656

#8 2632
12-9-03 ad
RECEIVED
DEC 01 2003
TC 2600

WILLIAMS, MORGAN & AMERSON, P.C.
10333 RICHMOND, STE. 1100, HOUSTON, TEXAS 77042
(713) 934-7000 FAX: (713) 934-7011

Danny L. Williams
Terry D. Morgan
J. Mike Amerson
Kenneth D. Goodman
Jeffrey A. Pyle
Jaison C. John
Ruben S. Bains
Scott F. Diring†

†Licensed in Wisconsin, not licensed in Texas

Shelley P.M. Fussey, Ph.D.*
Mark D. Moore, Ph.D.*
Raymund F. Eich, Ph.D.*
Daren C. Davis*
Stephanie A. Wardwell, Ph.D.*
Mark W. Sincell, Ph.D.*

*Patent Agent

RECEIVED
DEC 01 2003
Technology Center 2600

WRITER'S DIRECT DIAL:
(713) 934-4053

FILE: 2000.079600/JAP

November 24, 2003

Commissioner for Patents
P.O. Box 1450
Alexandria, VA 22313-1450

CERTIFICATE OF MAILING
37 C.F.R. § 1.8

I hereby certify that this correspondence is being deposited with the U.S. Postal Service with sufficient postage as First Class Mail in an envelope addressed to: Commissioner for Patents, P.O. Box 1450, Alexandria, VA 22313-1450, on the date below:

November 24, 2003
Date

Yolanda Murillo
Yolanda Murillo

RE: *U.S. Patent Application Serial No. 10/135,145*
Entitled: "AGENT REACTIVE SCHEDULING IN AN AUTOMATED MANUFACTURING ENVIRONMENT"
Inventor(s): GUSTAVO MATA ET AL.
Client Reference: TT4739

Sir:

Enclosed for filing in the above-referenced patent application is a Supplemental Information Disclosure Statement, PTO-Form 1449 and references (A1-A7).

No fees are believed to be due in connection with the filing of this Supplemental Information Disclosure Statement, however, should any fees under 37 C.F.R. §§ 1.16 to 1.21 be deemed necessary for any reason relating to the enclosed materials, the Assistant Commissioner is hereby authorized to deduct said fees from Advanced Micro Devices, Inc. Deposit Account No. 01-0365/TT4739.

Applicants note that the references **A1-A4** were received in application serial no. 10/232,145, entitled "METHOD AND APPARATUS FOR SCHEDULING WORKPIECES WITH COMPATIBLE PROCESSING REQUIREMENTS" and filed on August 30, 2002.

Applicants note that the references **A5-A7** were received in application serial no. 10/231,561, entitled "METHOD AND APPARATUS FOR REDUCING SCHEDULING CONFLICTS FOR A RESOURCE" and filed on August 30, 2002.

Please date stamp and return the enclosed postcard evidencing receipt of these materials.

Customer No. 23720

Respectfully submitted,

Jeffrey A. Pyle
Reg. No. 34,904

JAP:ym
Encl.

UNITED STATES PATENT AND TRADEMARK OFFICE

UNITED STATES DEPARTMENT OF COMMERCE
United States Patent and Trademark Office
Address: COMMISSIONER FOR PATENTS
P.O. Box 1450
Alexandria, Virginia 22313-1450
www.uspto.gov

APPLICATION NO.	FILING DATE	FIRST NAMED INVENTOR	ATTORNEY DOCKET NO.	CONFIRMATION NO.
10/135,145	04/30/2002	Gustavo Mata	2000.079600	5112

23720 7590 01/16/2004

WILLIAMS, MORGAN & AMERSON, P.C.
10333 RICHMOND, SUITE 1100
HOUSTON, TX 77042

EXAMINER	
GANDHI, JAYPRAKASH N	

ART UNIT	PAPER NUMBER
2125	10

DATE MAILED: 01/16/2004

Please find below and/or attached an Office communication concerning this application or proceeding.

Petitioner STMICROELECTRONICS, INC.,
Ex. 1006, IPR2022-00681, Pg. 076

Office Action Summary	Application No.	Applicant(s)	
	10/135,145	MATA ET AL.	
	Examiner	Art Unit	
	Jayprakash N Gandhi	2125	

-- The MAILING DATE of this communication appears on the cover sheet with the correspondence address --

Period for Reply

A SHORTENED STATUTORY PERIOD FOR REPLY IS SET TO EXPIRE 3 MONTH(S) FROM THE MAILING DATE OF THIS COMMUNICATION.

- Extensions of time may be available under the provisions of 37 CFR 1.136(a). In no event, however, may a reply be timely filed after SIX (6) MONTHS from the mailing date of this communication.
- If the period for reply specified above is less than thirty (30) days, a reply within the statutory minimum of thirty (30) days will be considered timely.
- If NO period for reply is specified above, the maximum statutory period will apply and will expire SIX (6) MONTHS from the mailing date of this communication.
- Failure to reply within the set or extended period for reply will, by statute, cause the application to become ABANDONED (35 U.S.C. § 133).
- Any reply received by the Office later than three months after the mailing date of this communication, even if timely filed, may reduce any earned patent term adjustment. See 37 CFR 1.704(b).

Status

1)☒ Responsive to communication(s) filed on *08 September 2003*.

2a)☐ This action is **FINAL**. 2b)☒ This action is non-final.

3)☐ Since this application is in condition for allowance except for formal matters, prosecution as to the merits is closed in accordance with the practice under *Ex parte Quayle*, 1935 C.D. 11, 453 O.G. 213.

Disposition of Claims

4)☒ Claim(s) *1-53* is/are pending in the application.

4a) Of the above claim(s) _____ is/are withdrawn from consideration.

5)☐ Claim(s) _____ is/are allowed.

6)☒ Claim(s) *1-53* is/are rejected.

7)☐ Claim(s) _____ is/are objected to.

8)☐ Claim(s) _____ are subject to restriction and/or election requirement.

Application Papers

9)☐ The specification is objected to by the Examiner.

10)☐ The drawing(s) filed on _____ is/are: a)☐ accepted or b)☐ objected to by the Examiner.

Applicant may not request that any objection to the drawing(s) be held in abeyance. See 37 CFR 1.85(a).

Replacement drawing sheet(s) including the correction is required if the drawing(s) is objected to. See 37 CFR 1.121(d).

11)☐ The oath or declaration is objected to by the Examiner. Note the attached Office Action or form PTO-152.

Priority under 35 U.S.C. §§ 119 and 120

12)☐ Acknowledgment is made of a claim for foreign priority under 35 U.S.C. § 119(a)-(d) or (f).

a)☐ All b)☐ Some * c)☐ None of:

1.☐ Certified copies of the priority documents have been received.

2.☐ Certified copies of the priority documents have been received in Application No. _____.

3.☐ Copies of the certified copies of the priority documents have been received in this National Stage application from the International Bureau (PCT Rule 17.2(a)).

* See the attached detailed Office action for a list of the certified copies not received.

13)☐ Acknowledgment is made of a claim for domestic priority under 35 U.S.C. § 119(e) (to a provisional application) since a specific reference was included in the first sentence of the specification or in an Application Data Sheet. 37 CFR 1.78.

a) ☐ The translation of the foreign language provisional application has been received.

14)☐ Acknowledgment is made of a claim for domestic priority under 35 U.S.C. §§ 120 and/or 121 since a specific reference was included in the first sentence of the specification or in an Application Data Sheet. 37 CFR 1.78.

Attachment(s)

1) ☐ Notice of References Cited (PTO-892)
2) ☐ Notice of Draftsperson's Patent Drawing Review (PTO-948)
3) ☒ Information Disclosure Statement(s) (PTO-1449) Paper No(s) *7,8,9* .
4) ☐ Interview Summary (PTO-413) Paper No(s). _____ .
5) ☐ Notice of Informal Patent Application (PTO-152)
6) ☐ Other: .

Petitioner STMICROELECTRONICS, INC.,
Ex. 1006, IPR2022-00681, Pg. 177

Claim Rejections - 35 USC § 112

1. The following is a quotation of the second paragraph of 35 U.S.C. 112:

> The specification shall conclude with one or more claims particularly pointing out and distinctly claiming the subject matter which the applicant regards as his invention.

2. Claims 1-32 are rejected under 35 U.S.C. 112, second paragraph, as being indefinite for failing to particularly point out and distinctly claim the subject matter which applicant regards as the invention.

Claims 1, 12, 19 and 26 recite, "**detecting** an occurrence of **a predetermined event",** it is not understood why, one needs to detect "a predetermined (to consider and plan in advance)" event and change the scheduling action accordingly. Claims 2-11, 13-18, 20-25 and 27-32 are included in this rejection because of their dependency.

Claim Rejections - 35 USC § 102

3. The following is a quotation of the appropriate paragraphs of 35 U.S.C. 102 that form the basis for the rejections under this section made in this Office action:

> A person shall be entitled to a patent unless –
>
> (b) the invention was patented or described in a printed publication in this or a foreign country or in public use or on sale in this country, more than one year prior to the date of application for patent in the United States.

4. Claims 1-53 as best understood are rejected under 35 U.S.C. 102(b) as being anticipated by Parad (U. S. Patent 5,369,570).

Regarding claims 1, 12, 19 and 26, Parad discloses all the claimed limitations of the invention, including haven't method, computer-readable medium, computer system and apparatus for scheduling in automated manufacturing environment (ABSTRACT).

Parad does not positively disclose of having software-scheduling agent, but the claimed element is inherent property of Parad invention.

Regarding claims 33 and 44, Parad clearly discloses an automated manufacturing environment (ABSTRACT), including a plurality of work pieces/processing satiations and a plurality of software-scheduling agents (inherent property).

Regarding claims 2-11, 13-18, 20-25, 27-32, 34-43 and 45-53, the claimed elements are clearly disclosed in column 4, lines 67^{+}, column 5, lines 5-14, and figures 2-8. It is to be noted dependent claims recited "at least one of".

Conclusion

Any inquiry concerning this communication or earlier communications from the examiner should be directed to Jayprakash N Gandhi whose telephone number is 703-305-7513. The examiner can normally be reached on 6:30-5:00 (Mon. - Thu.).

If attempts to reach the examiner by telephone are unsuccessful, the examiner's supervisor, Leo P Picard can be reached on 703-308-0538. The fax phone number for the organization where this application or proceeding is assigned is (703) 872-9306.

Any inquiry of a general nature or relating to the status of this application or proceeding should be directed to the receptionist whose telephone number is 703-306-5484.

Jayprakash N Gandhi
Primary Examiner
Art Unit 2125

JNG

Form PTO-1449 (modified)	Atty. Docket No. 2000.079600/TT4739	Serial No. 10/135,145
List of Patents and Publications for Applicant's INFORMATION DISCLOSURE STATEMENT (Use several sheets if necessary)	Applicant(s): GUSTAVO MATA ET AL.	
	Filing Date: April 30, 2002	Group: ~~2632~~ 2125

OIPE JC10 SEQUENCE LISTING AUG 29 2003 PATENT & TRADEMARK

U.S. Patent Documents	Foreign Patent Documents	Other Art
See Page 1	*See Page 1*	*See Page 1*

U.S. Patent Documents

Exam. Init.	Ref. Des.	Document Number	Date	Name	Class	Sub Class	Filing Date of App.
JNG	A1	5,444,632	08/22/1995	Kline et al.	364	468	04/28/1994
	A2	5,586,021	12/17/1996	Fargher et al.	364	468.06	03/24/1992
	A3	6,128,542	10/03/2000	Kristoff et al.	700	97	03/29/1993
	A4	6,263,255	07/17/2001	Tan et al.	700	121	05/18/1998
	A5	6,374,144	04/16/2002	Viviani et al.	700	12	12/22/1998

Foreign Patent Documents

Exam. Init.	Ref. Des.	Document Number	Date	Country	Class	Sub Class	Translation Yes/No
	B1						
	B2						
	B3						
	B4						
	B5						

RECEIVED
SEP 0 3 2003
Technology Center 2600

Other Art (Including Author, Title, Date Pertinent Pages, Etc.)

Exam. Init.	Ref. Des.	Citation
	C1	
	C2	
	C3	
	C4	
	C5	

#9

EXAMINER: JNGandhi	DATE CONSIDERED: 1/12/04

EXAMINER: INITIAL IF REFERENCE CONSIDERED, WHETHER OR NOT CITATION IS IN CONFORMANCE WITH MPEP609; DRAW LINE THROUGH CITATION IF NOT IN CONFORMANCE AND NOT CONSIDERED. INCLUDE COPY OF THIS FORM WITH NEXT COMMUNICATION TO APPLICANT.

Petitioner STMICROELECTRONICS, INC.,
Ex. 1006, IPR2022-00681, Pg. 180

Form PTO-1449 (modified)	Atty. Docket No. 2000.079600	Serial No. 10/135,145
List of Patents and Publications for Applicant's INFORMATION DISCLOSURE STATEMENT (Use several sheets if necessary)	Applicant Gustavo Mata et al.	
	Filing Date: April 30, 2002	Group: 2125

OIPE JC95 OCT 28 2003 PATENT & TRADEMARK OFFICE

U.S. Patent Documents	Foreign Patent Documents	Other Art
See Page 1	*See Page 1*	*See Page 1*

U.S. Patent Documents

Exam. Init.	Ref. Des.	Document Number	Date	Name	Class	Sub Class	Filing Date of App.
JNG	A1	5,369,570	11/29/1994	Parad	364	401	11/14/1991
	A2	5,093,794	03/03/1992	Howie et al.	364	468	08/22/1989
	A3	4,796,194	01/03/1989	Atherton	364	468	08/20/1986
	A4						
	A5						

Foreign Patent Documents

Exam. Init.	Ref. Des.	Document Number	Date	Country	Class	Sub Class	Translation Yes/No
	B1						
	B2						
	B3						
	B4						
	B5						

RECEIVED
OCT 30 2003
Technology Center 2100

Other Art (Including Author, Title, Date Pertinent Pages, Etc.)

Exam. Init.	Ref. Des.	Citation
	C1	International Search Report dated September 30, 2003 (PCT/US02/41777; TT4739-PCT)
	C2	
	C3	
	C4	
	C5	

#7

EXAMINER:	DATE CONSIDERED: 1/12/04

EXAMINER: INITIAL IF REFERENCE CONSIDERED, WHETHER OR NOT CITATION IS IN CONFORMANCE WITH MPEP609; DRAW LINE THROUGH CITATION IF NOT IN CONFORMANCE AND NOT CONSIDERED. INCLUDE COPY OF THIS FORM WITH NEXT COMMUNICATION TO APPLICANT.

Petitioner STMICROELECTRONICS, INC.,
Ex. 1006, IPR2022-00681, Pg. 181

Form PTO-1449 (modified)	Atty. Docket No. 2000.079600/TT4739	Serial No. 10/135,145
List of Patents and Publications for Applicant's INFORMATION DISCLOSURE STATEMENT (Use several sheets if necessary)	Applicant(s): GUSTAVO MATA ET AL.	
	Filing Date: April 30, 2002	Group: 2825

OIPE NOV 26 2003 PATENT & TRADEMARK OFFICE

RECEIVED DEC 01 2003 Technology Center 2600

U.S. Patent Documents	Foreign Patent Documents	Other Art
See Page 1	*See Page 1*	*See Page 1*

U.S. Patent Documents

Exam. Init.	Ref. Des.	Document Number	Date	Name	Class	Sub Class	Filing Date of App.
JNE	A1	6,584,369	06/24/2003	Patel et al.	700	100	01/25/2001
	A2	6,400,999	06/04/2002	Kashiyama et al.	700	100	06/28/1999
	A3	6,356,797	03/12/2002	Hsieh et al.	700	101	01/04/1999
	A4	5,375,061	12/20/1994	Hara et al.	364	468	11/27/1991
	A5	6,088,626	07/11/2000	Lilly et al.	700	100	04/24/1998
	A6	6,038,539	03/14/2000	Maruyama et al.	705	8	03/04/1993
	A7	5,890,134	03/30/1999	Fox	705	9	02/16/1996
	A8						
	A9						

Foreign Patent Documents

Exam. Init.	Ref. Des.	Document Number	Date	Country	Class	Sub Class	Translation Yes/No
	B1						
	B2						

Other Art (Including Author, Title, Date Pertinent Pages, Etc.)

Exam. Init.	Ref. Des.	Citation
	C1	
	C2	

#8

EXAMINER: JNhenderh	DATE CONSIDERED: 1/12/04

EXAMINER: INITIAL IF REFERENCE CONSIDERED, WHETHER OR NOT CITATION IS IN CONFORMANCE WITH MPEP609; DRAW LINE THROUGH CITATION IF NOT IN CONFORMANCE AND NOT CONSIDERED. INCLUDE COPY OF THIS FORM WITH NEXT COMMUNICATION TO APPLICANT.

Petitioner STMICROELECTRONICS, INC.,
Ex. 1006, IPR2022-00681, Pg. 182

#11

RECEIVED
CENTRAL FAX CENTER
FEB 2 0 2004

WILLIAMS, MORGAN & AMERSON, P.C
10333 Richmond Drive, Suite 1100, Houston, Texas 77042
Phone: 713-934-7000 Fax: 713-934-7011

FACSIMILE TRANSMITTAL SHEET

GROUP ART UNIT 2125

DATE:	FEBRUARY 20, 2004		
TO:	EXAMINER JAYPRAKASH N. HANDHI	TOTAL NO. OF PAGES INCLUDING COVER: 7	
FAX:	703.872-9306	PHONE:	
FROM:	JEFFREY A. PYLE		
RE:	AMENDED PTO-1449	FILE:	SERIAL NO. 10/135,145 2000.079600/TT4739/JAP

☐ URGENT ☑ FOR REVIEW ☐ PLEASE YOUR FILE ☑ PLEASE REPLY ☑ PLEASE HANDLE

ORIGINAL: ☐ WILL FOLLOW ☑ WILL NOT FOLLOW

NOTES/COMMENTS:

CONFIDENTIALITY NOTE

The documents accompanying this facsimile transmission contain information from the law firm of Williams, Morgan & Amerson which may be confidential and/or privileged. The information is intended to be for the use of the individual or entity named on this transmission sheet. If you are not the intended recipient, be aware that any disclosure, copying, distribution or use of the contents of this faxed information is prohibited. If you have received this facsimile in error, please notify us by telephone immediately so that we can arrange for the retrieval of the original documents at no cost to you.

Petitioner STMICROELECTRONICS, INC.,
Ex. 1006, IPR2022-00681, Pg. 183

RECEIVED
CENTRAL FAX CENTER
FEB 2 0 2004

CERTIFICATE OF TRANSMISSION 37 CFR 1.6(d)

I hereby certify that this correspondence is being facsimile transmitted to the United States Patent and Trademark Office, Fax No. 1-703-872-9306 on February 20, 2004.

Raquel Carrizal

PATENT

IN THE UNITED STATES PATENT AND TRADEMARK OFFICE

In re Application of:
GUSTAVO MATA ET AL

Serial No.: 10/135,145

Filed: April 30, 2002

For: **AGENT REACTIVE SCHEDULING IN AN AUTOMATED MANUFACTURING ENVIRONMENT**

Group Art Unit: 2125

Examiner: Jayprakashn N. Handhi

Atty. Dkt. No.: 2000.079600/TT4739/JAP

TRANSMITTAL LETTER

Commissioner for Patents
P. O. Box 1450
Alexandria, VA 22313-1450

Sir:

Enclosed for filing in the above-captioned application is an Amended PTO-1449.

Applicants note that the previous PTO-1449 filed in this case, did not include the specific date(s) for several of the prior art(s) listed on the PTO-1449. Enclosed is an Amended PTO-1449 reflecting the dates as relates to the following cited references: C4, C14-16, C19, C24, C27, C28 and C45. Since references were previously submitted with the original PTO-1449, Applicants are not submitting new copies of the listed references.

Petitioner STMICROELECTRONICS, INC.,
Ex. 1006, IPR2022-00681, Pg. 184

Respectfully submitted,

Jeffrey A. Pyle
Reg. No. 34,904

Attorney for Applicants

WILLIAMS, MORGAN & AMERSON
CUSTOMER NUMBER: 23720

10333 Richmond Dr., Suite 1100
Houston, Texas 77042
(713) 934-7000

Date: February 20, 2004

Petitioner STMICROELECTRONICS, INC.,
Ex. 1006, IPR2022-00681, Pg. 185

OFFICIAL

RECEIVED
CENTRAL FAX CENTER
APR 14 2004

WILLIAMS, MORGAN & AMERSON, P.C
10333 Richmond Drive, Suite 1100, Houston, Texas 77042
Phone: 713-934-7000 Fax: 713-934-7011

FACSIMILE TRANSMITTAL SHEET

GROUP ART UNIT 2125

DATE:	APRIL 14, 2004		
TO:	EXAMINER JAYPRAKASH N. GANDHI	TOTAL NO. OF PAGES INCLUDING COVER: 7	
FAX:	703.872-9306	PHONE:	
FROM:	JEFFREY A. PYLE		
RE:	RESPONSE TO OFFICE ACTION Dated January 16, 2004	FILE:	SERIAL NO. 10/134,145 2000.079600/TT4739/JAP

☐ URGENT ☑ FOR REVIEW ☐ PLEASE YOUR FILE ☑ PLEASE REPLY ☑ PLEASE HANDLE

ORIGINAL: ☐ WILL FOLLOW ☑ WILL NOT FOLLOW

NOTES/COMMENTS:

CONFIDENTIALITY NOTE

The documents accompanying this facsimile transmission contain information from the law firm of Williams, Morgan & Amerson which may be confidential and/or privileged. The information is intended to be for the use of the individual or entity named on this transmission sheet. If you are not the intended recipient, be aware that any disclosure, copying, distribution or use of the contents of this faxed information is prohibited. If you have received this facsimile in error, please notify us by telephone immediately so that we can arrange for the retrieval of the original documents at no cost to you.

RECEIVED
CENTRAL FAX CENTER
APR 14 2004

Recvs.
#12
O.B.
4/19/04

OFFICIAL

PATENT

IN THE UNITED STATES PATENT AND TRADEMARK OFFICE

In re Application of:
GUSTAVO MATA, ET AL

Serial No.: 10/135,145

Filed: 4/30/2002

For: AGENT REACTIVE SCHEDULING IN AN AUTOMATED MANUFACTURING ENVIRONMENT

Group Art Unit: 2125

Examiner: JAYPRAKASH N. GANDHI

Atty. Dkt. No.: 2000.079600/JAP

RESPONSE TO OFFICE ACTION DATED JANUARY 16, 2004

CERTIFICATE OF MAILING 37 CFR 1.6(d)

I hereby certify that this correspondence is being transmitted via facsimile to: 1-703-872-9306, Commissioner for Patents, P.O. Box 1450, Alexandria, VA 22313-1450, on April 14, 2004

Kathy Danas
Kathryn Danas

Commissioner for Patents
P.O. Box 1450
Alexandria, VA 22313-1450

Sir:

This paper is submitted in response to the Office Action dated January 16, 2004 ("Paper No. 10") for which the three-month date for response is April 16, 2004. It is believed that no fee is due; however, should any fees under 37 C.F.R. §§ 1.16 to 1.21 be required for any reason, the Director is authorized to deduct said fees from Advanced Micro Devices, Inc. Deposit Account No. 01-0365/TT4739.

Reconsideration of the application is respectfully requested.

REMARKS

Claims 1-53 are pending in the case, each having been originally filed. Paper No. 10 rejected each of claims 1-53. More particularly, Paper No. 10 rejected:

- claims 1-32 as indefinite under 35 U.S.C. § 112, ¶ 2; and
- claims 1-53 as anticipated under 35 U.S.C. § 102 (b) by U.S. Letters Patent 5,369,570 ("Parad").

There were no other rejections or objections. Paper No. 10 does not address the disposition of the previous rejections from the previous Office Action dated August 21, 2003. Applicants presume these rejections have been withdrawn in light of the new grounds of rejection without any affirmation of the previous rejections.

Applicants traverse each of the rejections.

I. CLAIMS 1-32 ARE DEFINITE

Paper No. 10 rejected claims 1-32 as indefinite under 35 U.S.C. § 112, ¶ 2. In particular, Paper No. 10 notes that claims 1, 12, 19 and 26 recite that the detected event be a "predetermined" event. Applicants note that independent claims 33 and 44 also recite this limitation although these claims were not rejected on this ground. Paper No. 10 alleges this limitation to be vague because "it is not understood why" the occurrence needs to be a "predetermined" one.

Applicants respectfully submit that this consideration is irrelevant to the determination of whether the claims are definite. "The test for definiteness under 35 U.S.C. 112, second paragraph is whether 'those skilled in the art would understand what is claimed when the claim is read in light of the specification.'" M.P.E.P. § 2173.02 (citation omitted). Thus, the question is

Petitioner STMICROELECTRONICS, INC.,
Ex. 1006, IPR2022-00681, Pg. 188

whether one skilled in the art can understand the scope of the limitation, and not whether one skilled in the art can understand the reason for its desirability.

The Office does not allege that those skilled in the art cannot ascertain the scope of the claims reciting a "predetermined" event. The record is devoid of any evidence which would support such an allegation. Applicants therefore respectfully submit that claims 1-32 are definite and requests that the rejections be withdrawn.

II. ALL CLAIMS ARE NOVEL OVER PARAD

Paper No. 10 rejected claims 1-53 as anticipated under 35 U.S.C. § 102 (b) by U.S. Letters Patent 5,369,570 ("Parad"). An anticipating reference, by definition, must disclose every limitation of the rejected claim in the same relationship to one another as set forth in the claim. *In re Bond*, 15 U.S.P.Q.2d (BNA) 1566, 1567 (Fed. Cir. 1990). Office policy echoes this formulation M.P.E.P. § 2131. Applicant respectfully submits that Parad fails to meet this strict standard and that the rejections fail procedurally.

A. PARAD FAILS TO DISCLOSE ALL THE CLAIM LIMITATIONS

Each of the independent claims 1, 12, 19, 26, 33 and 44 recites a "software scheduling agent." Paper No. 10 concedes that Parad fails to disclose a software scheduling agent, but alleges that such is an "inherent property of Parad [*sic*] invention." Inherency in anticipation requires that the asserted proposition *necessarily* flow from the disclosure. *In re Oelrich*, 212 U.S.P.Q. (BNA) 323, 326 (C.C.P.A. 1981); *Ex parte Levy*, 17 U.S.P.Q.2d (BNA) 1461, 1463-1464 (Pat. & Tm. Off. Bd. Pat. App. & Int. 1990); *Ex parte Skinner*, 2 U.S.P.Q.2d (BNA) 1788, 1789 (Bd. Pat. App. & Int. 1987).

PAGE 4/7 * RCVD AT 4/14/2004 12:33:54 PM [Eastern Daylight Time] * SVR:USPTO-EFXRF-1/1 * DNIS:8729306 * CSID:7139347011 * DURATION (mm-ss):01-58

Petitioner STMICROELECTRONICS, INC.,
Ex. 1006, IPR2022-00681, Pg. 189

To inherently anticipate, it is not enough that a reference could have, should have, or would have been used as the claimed invention. "The mere fact that a certain thing *may* result from a given set of circumstances is not sufficient." *Oelrich*, at 326, quoting *Hansgirg v. Kemmer*, 40 U.S.P.Q. (BNA) 665, 667 (C.C.P.A. 1939); *In re Rijckaert*, 28 U.S.P.Q.2d (BNA) 1955, 1957 (Fed. Cir. 1993), quoting *Oelrich*, at 326; *see also Skinner*, at 1789. "Inherency... may not be established by probabilities or possibilities. The mere fact that a certain thing may result from a given set of circumstances is not sufficient." *Skinner*, 2 U.S.P.Q.2d (BNA) at 1789.

The existence of a "software scheduling agent" does not necessarily flow from Parad's disclosure, and thus is not inherently disclosed therein. Parad expressly states at col. 7, lines 53-54 that "[t]he present invention may be implemented in any combination of software, firmware, or hardware...." Thus, even if the Office can identify some functionality, or collection of functionalities, corresponding to that of Applicants' claimed "software scheduling agent," such functionality need not necessarily be implemented in software. Parad's own disclosure establishes that such functionality could be implemented in, for example, hardware, as opposed to software.

Consequently, it does not necessarily flow that such functionality would be implemented in a "software scheduling agent", and Parad fails to inherently teach such a limitation. The Office has already conceded that Parad does not expressly teach a "software scheduling agent." Accordingly, Parad fails to anticipate any of the claims. *In re Oelrich*, 212 U.S.P.Q. (BNA) 323, 326 (C.C.P.A. 1981); *Ex parte Levy*, 17 U.S.P.Q.2d (BNA) 1461, 1463-1464 (Pat. & Tm. Off. Bd. Pat. App. & Int. 1990); *Ex parte Skinner*, 2 U.S.P.Q.2d (BNA) 1788, 1789 (Bd. Pat. App. & Int. 1987).

PAGE 5/7 * RCVD AT 4/14/2004 12:33:54 PM [Eastern Daylight Time] * SVR:USPTO-EFXRF-1/1 * DNIS:8729306 * CSID:7139347011 * DURATION (mm-ss):01-58

Petitioner STMICROELECTRONICS, INC.,
Ex. 1006, IPR2022-00681, Pg. 190

B. THE *PRIMA FACIE* CASE IS DEFICIENT

"It is by now well settled that the burden of establishing a *prima facie* case of anticipation resides with the Patent and Trademark Office. *In re Piasecki*, 745 F.2d 1468, 1472, 223 U.S.P.Q. 785, 788 (Fed. Cir. 1984), quoting *In re Warner*, 379 F.2d 1011, 1016, 154 U.S.P.Q. 173, 177 (C.C.P.A. 1967); *Ex parte Skinner*, 2 U.S.P.Q.2d (BNA) 1788, 1788-89 (Bd. Pat. App. & Int. 1987). "[I]t is incumbent upon the examiner to identify wherein each and every facet of the claimed invention is disclosed in the applied reference." *Ex parte Levy*, 17 U.S.P.Q.2d (BNA) 1461, 1462 (Pat. & Tm. Off. Bd. Pat. App. & Int. 1990). Where anticipation is found through inherency, the Office's burden of establishing *prima facie* anticipation includes the burden of providing "...some evidence or scientific reasoning to establish the reasonableness of the examiner's belief that the functional limitation is an inherent characteristic of the prior art." *Ex parte Skinner*, 2 U.S.P.Q.2d (BNA) 1788, 1789 (Bd. Pat. App. & Int. 1987).

Applicants respectfully submit that Paper No. 10 fails to *prima facie* establish anticipation by Parad. This is most apparent with respect to the Office's reliance on the supposedly inherent teachings of Parad. As was established above, each of the independent claims recites a "software scheduling agent," which the Office concedes Parad does not teach but alleges that Parad inherently discloses. The entire treatment of this issue in Paper No. 10 is:

> Parad does not positively disclose of [*sic*] having software-scheduling agent, but the claimed element is [an] inherent property of Parad invention.

Noticeably lacking is any semblance of any evidence or scientific reasoning as to why the disclosure of Parad inherently discloses this limitation. Since such is required by law to make the *prima facie* case, the *prima facie* case is deficient. *Ex parte Skinner*, 2 U.S.P.Q.2d (BNA) 1788, 1789 (Bd. Pat. App. & Int. 1987).

PAGE 6/7 * RCVD AT 4/14/2004 12:33:54 PM [Eastern Daylight Time] * SVR:USPTO-EFXRF-1/1 * DNIS:8729306 * CSID:7139347011 * DURATION (mm-ss):01-58

Petitioner STMICROELECTRONICS, INC.,
Ex. 1006, IPR2022-00681, Pg. 191

III. CONCLUDING REMARKS

Paper No. 10 employed improper legal analyses in imposing the indefiniteness and anticipation rejections. Under legally correct analyses, the claims are neither indefinite nor anticipated. Furthermore, the improper legal analysis for anticipation fails to meet the standards necessary to *prima facie* establish any anticipation. Accordingly, Applicants respectfully submit that claims 1-59 are in condition for allowance and requests that they be allowed to issue.

The Examiner is invited to contact the undersigned attorney at (713) 934-4053 with any questions, comments or suggestions relating to the referenced patent application.

Respectfully submitted,

JEFFREY A. PYLE
Reg. No. 34,904
Attorney for Applicant

WILLIAMS, MORGAN & AMERSON
CUSTOMER NUMBER: 23720

10333 Richmond Dr., Suite 1100
Houston, Texas 77042
(713) 934-7000

Date: April 14, 2004

PAGE 7/7 * RCVD AT 4/14/2004 12:33:54 PM [Eastern Daylight Time] * SVR:USPTO-EFXRF-1/1 * DNIS:8729306 * CSID:7139347011 * DURATION (mm-ss):01-58

Petitioner STMICROELECTRONICS, INC.,
Ex. 1006, IPR2022-00681, Pg. 192

UNITED STATES PATENT AND TRADEMARK OFFICE

UNITED STATES DEPARTMENT OF COMMERCE
United States Patent and Trademark Office
Address: COMMISSIONER FOR PATENTS
P.O. Box 1450
Alexandria, Virginia 22313-1450
www.uspto.gov

APPLICATION NO.	FILING DATE	FIRST NAMED INVENTOR	ATTORNEY DOCKET NO.	CONFIRMATION NO.
10/135,145	04/30/2002	Gustavo Mata	2000.079600	5112

23720 7590 06/15/2004

WILLIAMS, MORGAN & AMERSON, P.C.
10333 RICHMOND, SUITE 1100
HOUSTON, TX 77042

EXAMINER	
GANDHI, JAYPRAKASH N	

ART UNIT	PAPER NUMBER
2125	13

DATE MAILED: 06/15/2004

Please find below and/or attached an Office communication concerning this application or proceeding.

Petitioner STMICROELECTRONICS, INC.,
Ex. 1006, IPR2022-00681, Pg. 193

Office Action Summary	Application	Applicant(s)	
	10/135,145	MATA ET AL.	
	Examiner	Art Unit	
	Jayprakash N Gandhi	2125	

-- The MAILING DATE of this communication appears on the cover sheet with the correspondence address --

Period for Reply

A SHORTENED STATUTORY PERIOD FOR REPLY IS SET TO EXPIRE 3 MONTH(S) FROM THE MAILING DATE OF THIS COMMUNICATION.

- Extensions of time may be available under the provisions of 37 CFR 1.136(a). In no event, however, may a reply be timely filed after SIX (6) MONTHS from the mailing date of this communication.
- If the period for reply specified above is less than thirty (30) days, a reply within the statutory minimum of thirty (30) days will be considered timely.
- If NO period for reply is specified above, the maximum statutory period will apply and will expire SIX (6) MONTHS from the mailing date of this communication.
- Failure to reply within the set or extended period for reply will, by statute, cause the application to become ABANDONED (35 U.S.C. § 133). Any reply received by the Office later than three months after the mailing date of this communication, even if timely filed, may reduce any earned patent term adjustment. See 37 CFR 1.704(b).

Status

1)☒ Responsive to communication(s) filed on *14 April 2003*.

2a)☒ This action is **FINAL**. 2b)☐ This action is non-final.

3)☐ Since this application is in condition for allowance except for formal matters, prosecution as to the merits is closed in accordance with the practice under *Ex parte Quayle*, 1935 C.D. 11, 453 O.G. 213.

Disposition of Claims

4)☒ Claim(s) *1-53* is/are pending in the application.

4a) Of the above claim(s) _____ is/are withdrawn from consideration.

5)☐ Claim(s) _____ is/are allowed.

6)☒ Claim(s) *1-53* is/are rejected.

7)☐ Claim(s) _____ is/are objected to.

8)☐ Claim(s) _____ are subject to restriction and/or election requirement.

Application Papers

9)☐ The specification is objected to by the Examiner.

10)☐ The drawing(s) filed on _____ is/are: a)☐ accepted or b)☐ objected to by the Examiner.

Applicant may not request that any objection to the drawing(s) be held in abeyance. See 37 CFR 1.85(a).

Replacement drawing sheet(s) including the correction is required if the drawing(s) is objected to. See 37 CFR 1.121(d).

11)☐ The oath or declaration is objected to by the Examiner. Note the attached Office Action or form PTO-152.

Priority under 35 U.S.C. § 119

12)☐ Acknowledgment is made of a claim for foreign priority under 35 U.S.C. § 119(a)-(d) or (f).

a)☐ All b)☐ Some * c)☐ None of:

1.☐ Certified copies of the priority documents have been received.

2.☐ Certified copies of the priority documents have been received in Application No. _____.

3.☐ Copies of the certified copies of the priority documents have been received in this National Stage application from the International Bureau (PCT Rule 17.2(a)).

* See the attached detailed Office action for a list of the certified copies not received.

Attachment(s)

1) ☐ Notice of References Cited (PTO-892)
2) ☐ Notice of Draftsperson's Patent Drawing Review (PTO-948)
3) ☒ Information Disclosure Statement(s) (PTO-1449 or PTO/SB/08) Paper No(s)/Mail Date *11*.
4) ☐ Interview Summary (PTO-413) Paper No(s)/Mail Date. _____ .
5) ☐ Notice of Informal Patent Application (PTO-152)
6) ☐ Other: _____.

Petitioner STMICROELECTRONICS, INC.,
Ex. 1006, IPR2022-00681, Pg. 194

Claim Rejections - 35 USC § 102

1. The following is a quotation of the appropriate paragraphs of 35 U.S.C. 102 that form the basis for the rejections under this section made in this Office action:

> A person shall be entitled to a patent unless –
>
> (b) the invention was patented or described in a printed publication in this or a foreign country or in public use or on sale in this country, more than one year prior to the date of application for patent in the United States.

Claims 1-53 as best understood are rejected under 35 U.S.C. 102(b) as being anticipated by Parad (U. S. Patent 5,369,570).

Regarding claims 1, 12, 19 and 26, Parad discloses all the claimed limitations of the invention, including haven't method, computer-readable medium, computer system and apparatus for scheduling in automated manufacturing environment (ABSTRACT). Parad does not positively disclose of having software-scheduling agent, but the claimed element is inherent property of Parad invention.

Regarding claims 33 and 44, Parad clearly discloses an automated manufacturing environment (ABSTRACT), including a plurality of work pieces/processing satiations and a plurality of software-scheduling agents (inherent property).

Regarding claims 2-11, 13-18, 20-25, 27-32, 34-43 and 45-53, the claimed elements are clearly disclosed in column 4, lines 67^{+}, column 5, lines 5-14, and figures 2-8. It is to be noted dependent claims recited "at least one of".

Response to Arguments

2. Applicant's arguments filed April 14, 2004 have been fully considered but they are not persuasive.

Regarding Applicant's argument that Parad does not disclose "***software scheduling agent***", the examiner notes that Applicant's definition of the term "***software scheduling agent"*** is very broad and can be interpreted as any body involving in scheduling can be considered as an ***software scheduling agent,*** because method, medium, system, apparatus and manufacturing are claimed and NOT software programming and therefore Parad (figure 1, elements 105-108) meets all the claimed invention.

Conclusion

3. **THIS ACTION IS MADE FINAL.** Applicant is reminded of the extension of time policy as set forth in 37 CFR 1.136(a).

A shortened statutory period for reply to this final action is set to expire THREE MONTHS from the mailing date of this action. In the event a first reply is filed within TWO MONTHS of the mailing date of this final action and the advisory action is not mailed until after the end of the THREE-MONTH shortened statutory period, then the shortened statutory period will expire on the date the advisory action is mailed, and any extension fee pursuant to 37 CFR 1.136(a) will be calculated from the mailing date of

the advisory action. In no event, however, will the statutory period for reply expire later than SIX MONTHS from the mailing date of this final action.

Any inquiry concerning this communication or earlier communications from the examiner should be directed to Jayprakash N Gandhi whose telephone number is 703-305-7513. The examiner can normally be reached on 6:30-5:00 (Mon. - Thu.).

If attempts to reach the examiner by telephone are unsuccessful, the examiner's supervisor, Leo P Picard can be reached on 703-308-0538. The fax phone number for the organization where this application or proceeding is assigned is 703-872-9306.

Information regarding the status of an application may be obtained from the Patent Application Information Retrieval (PAIR) system. Status information for published applications may be obtained from either Private PAIR or Public PAIR. Status information for unpublished applications is available through Private PAIR only. For more information about the PAIR system, see http://pair-direct.uspto.gov. Should you have questions on access to the Private PAIR system, contact the Electronic Business Center (EBC) at 866-217-9197 (toll-free).

Jayprakash N Gandhi
Primary Examiner
Art Unit 2125

JNG

#11 ad 2-25-04

Form PTO-1449 (modified)	Atty. Docket No. 2000.079600/TT4739	Serial No. 10/135,145
List of Patents and Publications for Applicant's INFORMATION DISCLOSURE STATEMENT (Use several sheets if necessary)	Applicant(s): GUSTAVO MATA ET AL	
	Filing Date: April 30, 2002	Group: 2125

U.S. Patent Documents	Foreign Patent Documents	Other Art
See Page 1	*See Page 1*	*See Pages 2-4*

U.S. Patent Documents

Exam. Init.	Ref. Des.	Document Number	Date	Name	Class	Sub Class	Filing Date of App.
JNG	A1	SN 10/331,715		Nettles et al.			12/30/02
	A2	SN 10/331,598		Barto et al			12/30/02
	A3	SN 10/331,596		Barto et al.			12/30/02
	A4	SN 10/284,705		Nettles et al.			10/31/02
	A5	SN 10/233,197		Barto et al.			8/30/02
	A6	SN 10/232,145		Barto et al.			8/30/02
	A7	SN 10/231,930		Barto et al.			8/30/02
	A8	SN 10/231,888		Barto et al.			8/30/02
	A9	SN 10/231,849		Barto et al			8/30/02
	A10	SN 10/231,648		Barto et al			8/30/02
	A11	SN 10/231,561		Barto et al.			8/30/02
	A12	SN 10/190,194		Li et al.			7/3/02
	A13	SN 10/160,990		Mata et al.			5/31/02
	A14	SN 10/160,956		Li et al.			5/31/02
	A15	SN 10/135,145		Mata et al.			4/30/02
	A16	6,202,062	03/13/2001	Cameron et al.	707	3	02/26/1999
	A17	6,148,239	11/14/2000	Funk et al.	700	1	12/12/1997
	A18	5,953,229	09/14/1999	Clark et al.	364	468.06	09/24/1996
	A19	5,548,535	08/20/1996	Zvonar	364	551.01	11/08/1994

Replaces paper #4

Foreign Patent Documents

Exam. Init.	Ref. Des.	Document Number	Date	Country	Class	Sub Class	Translation Yes/No
	B1						

EXAMINER: JNLavelle DATE CONSIDERED: 6/14/04

EXAMINER: INITIAL IF REFERENCE CONSIDERED, WHETHER OR NOT CITATION IS IN CONFORMANCE WITH MPEP609; DRAW LINE THROUGH CITATION IF NOT IN CONFORMANCE AND NOT CONSIDERED. INCLUDE COPY OF THIS FORM WITH NEXT COMMUNICATION TO APPLICANT.

PAGE 4/7 * RCVD AT 2/20/2004 1:25:23 PM [Eastern Standard Time] * SVR:USPTO-EFXRF-1/3 * DNIS:8729306 * CSID: * DURATION (mm-ss):02-32

Form PTO-1449 (modified)	Atty. Docket No. 2000.079600/TT4739	Serial No. 10/135,145
List of Patents and Publications for Applicant's INFORMATION DISCLOSURE STATEMENT (Use several sheets if necessary)	Applicant(s): GUSTAVO MATA ET AL	
	Filing Date: April 30, 2002	Group: 2125

U.S. Patent Documents	Foreign Patent Documents	Other Art
See Page 1	*See Page 1*	*See Pages 2-4*

Other Art (Including Author, Title, Date Pertinent Pages, Etc.)

Exam. Init.	Ref. Des.	Citation
JNG	C1	Resende, "Shop Floor Scheduling of Semiconductor Wafer Manufacturing," *University of California, Berkeley* (1987)
	C2	Glassey et al., "Closed-Loop Job Release Control for VLSI Circuit Manufacturing," *IEEE Transactions on Semiconductor Manufacturing* 1:36-46 (1988)
	C3	"Agent-Enhanced Manufacturing System Initiative," *Technologies for the Integration of Manufacturing Applications (TIMA)* (October 1997)
	C4	**Ebteshami et al.,"Trade-Offs in Cycle Time Management: Hot Lots", IEEE Transactions on Semiconductor Manufacturing, Vol 5, No. 2, May 1992.**
	C5	"Factory Integration," *The National Technology Roadmap for Semiconductors: Technology Needs* (1997)
	C6	SALSA Enhancements for next Swarm Release (April 22, 1999)
	C7	SALSA Exceptions—Minutes from 5/11/99
	C8	Starvation Avoidance Lot Start Agent (SALSA) (Overview: 4-15-99)
	C9	Starvation Avoidance Lot Start Agent, *Fab25 AEMSI/SALSA Review Meeting* (5/26/99)
	C10	Starvation Avoidance Lot Start Agent, *Iteration 1 Requirements Kickoff* (5/3/99)
	C11	Van Parunak, "Review of Axtell and Epstein" (6/23/99)
	C12	Baumgärtel et al., "Combining Multi-Agent Systems and Constraint Techniques in Production Logistics" (1996)
	C13	Bonvik et al., "Improving a Kanban Controlled Production Line Through Rapid Information Dissemination" (July 10, 1995)
	C14	Burke et al., "The Distributed Asynchronous Scheduler," pp. 309-339 (1994)
	C15	Butler et al., "ADDYMS: Architecture for Distributed Dynamic Manufacturing Scheduling," pp. 199-213 (1996)
	C16	Fordyce et al., "Integrating Decision Technologies for Dispatch Scheduling in Semiconductor Manufacturing," *Logistics Management System (LMS)*, pp. 473-516 (1994)
	C17	Hynynen, "BOSS: An Artificially Intelligent System for Distributed Factory Scheduling," *Computer Applications in Production and Engineering*, pp. 667-677 (1989)
	C18	Interrante et al., "Emergent Agent-Based Scheduling of Manufacturing Systems"
X	C19	Juba et al., "Production Improvements Using a Forward Scheduler " (1995)

EXAMINER: JNGandhi	DATE CONSIDERED: 6/4/04

EXAMINER: INITIAL IF REFERENCE CONSIDERED, WHETHER OR NOT CITATION IS IN CONFORMANCE WITH MPEP609; DRAW LINE THROUGH CITATION IF NOT IN CONFORMANCE AND NOT CONSIDERED. INCLUDE COPY OF THIS FORM WITH NEXT COMMUNICATION TO APPLICANT.

PAGE 5/7 * RCVD AT 2/20/2004 1:25:23 PM [Eastern Standard Time] * SVR:USPTO-EFXRF-1/3 * DNIS:8729306 * CSID: * DURATION (mm-ss):02-32

Petitioner STMICROELECTRONICS, INC.,
Ex. 1006, IPR2022-00681, Pg. 199

Form PTO-1449 (modified)	Atty. Docket No. 2000.079600/TT4739	Serial No. 10/135,145
List of Patents and Publications for Applicant's INFORMATION DISCLOSURE STATEMENT (Use several sheets if necessary)	Applicant(s): GUSTAVO MATA ET AL	
	Filing Date: April 30, 2002	Group: 2125

U.S. Patent Documents	Foreign Patent Documents	Other Art
See Page 1	*See Page 1*	*See Pages 2-4*

Other Art (Including Author, Title, Date Pertinent Pages, Etc.)

Exam. Init.	Ref. Des.	Citation
JNG	C20	Li et al., "Minimum Inventory Variability Schedule with Applications in Semiconductor Fabrication," *IEEE Transactions on Semiconductor Manufacturing* 9:145-149 (1996)
	C21	Lin et al., "Integrated Shop Floor Control Using Autonomous Agents," *IIE Transactions* 24:57-71 (1992)
	C22	Lu et al., "Efficient Scheduling Policies to Reduce Mean and Variance of Cycle-Time in Semiconductor Manufacturing Plants," *IEEE Transactions Semiconductor Manufacturing* 7:374-388 (1994)
	C23	Martin-Vega et al., "Applying Just-In-Time in a Wafer Fab: A Case Study," *IEEE Transactions on Semiconductor Manufacturing* 2:16-22 (1989)
	C24	Murthy et al., "Agent Based Cooperative Scheduling," pp. 112-117 (1997)
	C25	Van Parunak et al., "Agents Do It In Time—Experiences with Agent-Based Manufacturing Scheduling" (1999)
	C26	Van Parunak et al., "Agent-Based Models & Manufacturing Processes"
	C27	Ramos et al., "Scheduling Manufacturing Tasks Considering Due Dates: A New Method Based on Behaviours and Agendas" (1995)
	C28	Shen et al., "An Agent-Based Approach for Dynamic Manufacturing Scheduling" (1998)
	C29	Hollister, "Schedule Paper #17 Summary" (June 23, 1999)
	C30	Hollister, "Schedule Paper #19 Summary" (June 23, 1999)
	C31	Hollister, "Schedule Paper #23 Summary" (June 23, 1999)
	C32	Hollister, "Schedule Paper #32 Summary" (June 23, 1999)
	C33	Vaario et al., "An Emergent Modelling Method for Dynamic Scheduling," *Journal of Intelligent Manufacturing* 9:129-140 (1998)
	C34	Wellman et al., "Auction Protocols for Decentralized Scheduling" (May 22, 1998)
	C35	Weber, "Material Traceability—The Missing Link in TAP Systems," *Test, Assembly and Packaging Automation and Integration '99 Conference*
	C36	"ObjectSpace Fab Solutions Semiconductor Product Development Overview" (presented at SEMICON Southwest 1998)
	C37	"Agent Enhanced Manufacturing Systems Initiative (AEMSI) Project" (presented by Dan Radin, ERIM CEC November 12-13, 1998)

EXAMINER: JNGonzalez	DATE CONSIDERED: 6/14/04

EXAMINER: INITIAL IF REFERENCE CONSIDERED, WHETHER OR NOT CITATION IS IN CONFORMANCE WITH MPEP609; DRAW LINE THROUGH CITATION IF NOT IN CONFORMANCE AND NOT CONSIDERED. INCLUDE COPY OF THIS FORM WITH NEXT COMMUNICATION TO APPLICANT.

PAGE 6/7 * RCVD AT 2/20/2004 1:25:23 PM [Eastern Standard Time] * SVR:USPTO-EFXRF-1/3 * DNIS:8729306 * CSID: * DURATION (mm-ss):02-32

Petitioner STMICROELECTRONICS, INC.,
Ex. 1006, IPR2022-00681, Pg. 200

Form PTO-1449 (modified)	Atty. Docket No. 2000.079600/TT4739	Serial No. 10/135,145
List of Patents and Publications for Applicant's INFORMATION DISCLOSURE STATEMENT (Use several sheets if necessary)	Applicant(s): GUSTAVO MATA ET AL	
	Filing Date: April 30, 2002	Group: 2125

U.S. Patent Documents	Foreign Patent Documents	Other Art
See Page 1	*See Page 1*	*See Pages 2-4*

Other Art (Including Author, Title, Date Pertinent Pages, Etc.)

Exam. Init.	Ref. Des.	Citation
JNL	C38	Weber, "APC Framework: Raising the Standard for Fab Automation and Integration," *Equipment Automation Conference 1st European Symposium on Semiconductor Manufacturing* (April 14, 1999)
	C39	Wein, "Scheduling Semiconductor Wafer Fabrication," *IEEE Transactions on Semiconductor Manufacturing* 1:115-130 (1988)
	C40	Bonvik, "Performance Analysis of Manufacturing Systems Under Hybrid Control Policies" (September 22, 1995)
	C41	Bonvik, "Performance Analysis of Manufacturing Systems Under Hybrid Control Policies" (October 3, 1995)
	C42	Sikora et al., "Coordination Mechanisms for Multi-Agent Manufacturing Systems: Applications to Integrated Manufacturing Scheduling," *IEEE Transactions on Engineering Management* 44:175-187 (1997)
	C43	Sousa et al., "A Dynamic Scheduling Holon for Manufacturing Orders," *Journal of Intelligent Manufacturing* 9:107-112 (1998)
	C44	Upton et al., "Architectures and Auctions in Manufacturing," *Int. J. Computer Integrated Manufacturing* 4:23-33 (1991)
	C45	Fordyce et al., "Logistics Management System (LMS): An Advanced Decision Support System for the Fourth Decision Tier-Dispatch or Short Interval Scheduling,", pp. 1-58 (1994)
	C46	Gere, "Heuristics in Job Shop Scheduling," *Management Science* 13:167-190 (1966)
	C47	Ehteshami et al., "Trade-Offs in Cycle Time Management: Hot Lots," *IEEE Transactions on Semiconductor Manufacturing* 5:101-106 (1992)
	C48	Axtell et al., "Distributed Computation of Economic Equilibria via Bilateral Exchange" (March 1997)

EXAMINER: JNLowell	DATE CONSIDERED: 6/14/04

EXAMINER: INITIAL IF REFERENCE CONSIDERED, WHETHER OR NOT CITATION IS IN CONFORMANCE WITH MPEP609; DRAW LINE THROUGH CITATION IF NOT IN CONFORMANCE AND NOT CONSIDERED. INCLUDE COPY OF THIS FORM WITH NEXT COMMUNICATION TO APPLICANT.

PAGE 7/7 * RCVD AT 2/20/2004 1:25:23 PM [Eastern Standard Time] * SVR:USPTO-EFXRF-1/3 * DNIS:8729306 * CSID: * DURATION (mm-ss):02-32

Petitioner STMICROELECTRONICS, INC.,
Ex. 1006, IPR2022-00681, Pg. 201

WILLIAMS, MORGAN & AMERSON, P.C
10333 Richmond Drive, Suite 1100, Houston, Texas 77042
phone: 713-934-7000 fax: 713-934-7011

RECEIVED
CENTRAL FAX CENTER
AUG 0 6 2004

FACSIMILE TRANSMITTAL SHEET

OFFICIAL

GROUP ART UNIT 2125

TO: JAYPRAKASH N. GANDHI

FROM: JEFFREY A. PYLE

COMPANY: USPTO
MAIL STOP AF

DATE: AUGUST 6, 2004

FAX NUMBER: 703.872.9306

TOTAL NO. OF PAGES INCLUDING COVER: 5

PHONE NUMBER: 703.305.5431

SENDER'S REFERENCE NUMBER: 2000.079600/TT4739

RE: RESPONSE TO FINAL OFFICE ACTION DATED JUNE 15, 2004

YOUR REFERENCE NUMBER: (SERIAL NO. 10/135,145)

☐ URGENT ☐ FOR REVIEW ☐ PLEASE HANDLE ☐ PLEASE REPLY ☐ FOR YOUR FILE

ORIGINAL: ☐ WILL FOLLOW ☐ WILL NOT FOLLOW

NOTES/COMMENTS:

JEFFREY A. PYLE
(713) 934-4053 FAX (713) 934-7011
EMAIL: JPYLE@WMALAW.COM

CONFIDENTIALITY NOTE

The documents accompanying this facsimile transmission contain information from the law firm of Williams, Morgan & Amerson which may be confidential and/or privileged. The information is intended to be for the use of the individual or entity named on this transmission sheet. If you are not the intended recipient, be aware that any disclosure, copying, distribution or use of the contents of this faxed information is prohibited. If you have received this facsimile in error, please notify us by telephone immediately so that we can arrange for the retrieval of the original documents at no cost to you.

Petitioner STMICROELECTRONICS, INC.,
Ex. 1006, IPR2022-00681, Pg. 202

AMENDMENT UNDER 37 C.F.R. § 1.116
EXPEDITED PROCEDURE
EXAMINING GROUP 2125

PATENT

IN THE UNITED STATES PATENT AND TRADEMARK OFFICE

OFFICIAL

In re Application of:
GUSTAVO MATA ET AL.

Serial No.: 10/135,145

Filed: 4/30/2002

For: AGENT REACTIVE SCHEDULING IN AN AUTOMATED MANUFACTURING ENVIRONMENT

Group Art Unit: 2125

Examiner: JAYPRAKASH N. GANDHI

Atty. Dkt. No.: 2000.079600/JAP

RECEIVED
CENTRAL FAX CENTER
AUG 0 6 2004

AMENDMENT UNDER 37 C.F.R. § 1.116;
RESPONSE TO FINAL OFFICE ACTION DATED JUNE 15, 2004

MAIL STOP AF
Commissioner for Patents
P.O. Box 1450
Alexandria, VA 22313-1450

CERTIFICATE OF TRANSMISSION UNDER 37 CFR 1.8
I hereby certify that this correspondence is being facsimile transmitted to the United States Patent and Trademark Office on August 6, 2004.
Yolanda Murillo
Yolanda Murillo

Sir:

Applicants respectfully request that the following amendments be entered in the captioned patent application in accordance with 37 C.F.R. § 1.116. Applicants submit the foregoing amendments to place the case in even better condition for allowance or appeal.

This paper is submitted in response to the final Office Action dated June 15, 2004 for which the three-month date for response is September 15, 2004. It is believed that no fee is due; however, should any fees under 37 C.F.R. §§ 1.16 to 1.21 be required for any reason relating to this document, the Director is authorized to deduct said fees from Advanced Micro Devices, Inc. Deposit Account No. 01-0365/TT4739.

Reconsideration of the application in view of the following amendments and remarks is respectfully requested.

Petitioner STMICROELECTRONICS, INC.,
Ex. 1006, IPR2022-00681, Pg. 203

AMENDMENT UNDER 37 C.F.R. § 1.116
EXPEDITED PROCEDURE
EXAMINING GROUP 2125

REMARKS

Applicants note that the final Office Action essentially reiterates the rejections first made in the Office Action dated January 16, 2004, to which Applicants timely responded on April 14, 2004. Accordingly, Applicants maintain their position set forth in the April 14th response, and hereby incorporate them *verbatim* by reference as if they were fully set forth herein.

In response to the arguments supporting Applicants' position, the Office offered the unsupported statement that:

> ...Applicant's definition of the term "***software scheduling agent***" is very broad and can be interpreted as any body involving in scheduling can be considered as an ***software scheduling agent***, because method, medium, system, apparatus and manufacturing are claimed and NOT software programming and therefore Parad (figure 1, elements 105 – 108) meets all the claimed invention."

Final Office Action, Detailed Action, p. 3, ¶ 2. Applicants remind the Office of the duty to make the *prima facie* case with particularity, *Ex parte Levy*, 17 U.S.P.Q.2d (BNA) 1461, 1462 (Pat. & Tm. Off. Bd. Pat. App. & Int. 1990) (identify each element of the claimed invention in the prior art); *Ex parte Skinner*, 2 U.S.P.Q.2d (BNA) 1788, 1788-89 (Bd. Pat. App. & Int. 1987) (provide reasoning supporting inherency allegation), which this statement fatally lacks.

In particular, Applicants request clarification as to the disclosure supporting the Office's allegation of the breadth of the supposed definition for "software scheduling agent." Applicants respectfully submit that there is no support for such a broad definition. For instance, there is no support in Applicants' specification for the proposition that a scheduling agent represent more than one manufacturing domain entity

Petitioner STMICROELECTRONICS, INC.,
Ex. 1006, IPR2022-00681, Pg. 204

at any given time or that a scheduling agent be implemented in anything other than software.

Thus, there is no support for a definition of the term "software scheduling agent" in which an entity represents, for instance, a whole subsystem comprising large numbers of manufacturing domain entities. Nor is there any support for the prospect that a scheduling agent be implemented in, for instance, hardware. Note that the claims in issue actually recite a *software* scheduling agent, as is conceded by placing the term "software scheduling agent" in quotations. The passage quoted above is therefore erroneous on its face. However much the Office might wish to the contrary, the statement that *any* software entity that schedules constitutes a software scheduling agent is clearly wrong.

Furthermore, although not clear from the quoted passage, it appears to Applicant that the Office may be taking the position that the software aspect of the scheduling agent is immaterial because "software programming" is not claimed. The Office apparently makes this argument to obviate Applicant's inherency argument with respect to Parad. Applicant requests authority for the proposition that the Office can simply ignore limitations in the claims at its whim. Each of the claims expressly recites a "software scheduling agent", and each of those limitations must be disclosed in the prior art as required by *In re Bond*, 15 U.S.P.Q.2d (BNA) 1566, 1567 (Fed. Cir. 1990) (anticipating reference must disclose every limitation of the rejected claim in the same relationship to one another as set forth in the claim).

Applicants also note that, for the first time, the Office has attempted to identify something it associates with "software scheduling agents" in Parad. Final Office Action, Detailed Action, p. 3, ¶ 2. The Office identifies elements 105 – 108 in Figure 1.

Petitioner STMICROELECTRONICS, INC.,
Ex. 1006, IPR2022-00681, Pg. 205

Applicants note that Figure 1 is a flowchart of a method (Parad, col. 5, l. 66-67), and elements 105 – 108, which are functionalities of some aspect of Parad's system (col. 9, l. 19-33). However, as Applicants earlier noted:

> Parad expressly states at col. 7, lines 53-54 that "[t]he present invention may be implemented in any combination of software, firmware, or hardware...." Thus, even if the Office can identify some functionality, or collection of functionalities, corresponding to that of Applicants' claimed "software scheduling agent," such functionality need not necessarily be implemented in software. Parad's own disclosure establishes that such functionality could be implemented in, for example, hardware, as opposed to software.

Response to Office Action Dated January 16, 2004, p. 4. Thus, the disclosure of the elements 105 – 108 to which the Office finally points fails to inherently disclose a "software scheduling agent." *In re Oelrich*, 212 U.S.P.Q. (BNA) 323, 326 (C.C.P.A. 1981); *Ex parte Levy*, 17 U.S.P.Q.2d (BNA) 1461, 1463-1464 (Pat. & Tm. Off. Bd. Pat. App. & Int. 1990); *Ex parte Skinner*, 2 U.S.P.Q.2d (BNA) 1788, 1789 (Bd. Pat. App. & Int. 1987).

The Examiner is invited to contact the undersigned attorney at (713) 934-4053 with any questions, comments or suggestions relating to the referenced patent application.

Respectfully submitted,

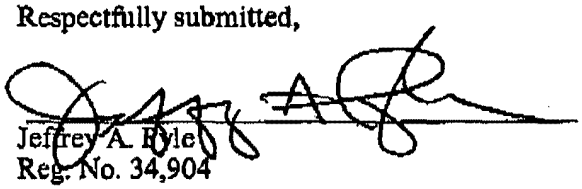

Jeffrey A. Ryle
Reg. No. 34,904

Attorney for Applicants

WILLIAMS, MORGAN & AMERSON
CUSTOMER NUMBER: 23720

10333 Richmond Dr., Suite 1100
Houston, Texas 77042
(713) 934-7000

Date: August 6, 2004

Petitioner STMICROELECTRONICS, INC.,
Ex. 1006, IPR2022-00681, Pg. 206

UNITED STATES PATENT AND TRADEMARK OFFICE

UNITED STATES DEPARTMENT OF COMMERCE
United States Patent and Trademark Office
Address: COMMISSIONER FOR PATENTS
P.O. Box 1450
Alexandria, Virginia 22313-1450
www.uspto.gov

APPLICATION NUMBER	FILING/RECEIPT DATE	FIRST NAMED APPLICANT	ATTY. DOCKET NO.
10/135,145	04/30/2002	Gustavo Mata	2000.079600

CONFIRMATION NO. 5112

023720
WILLIAMS, MORGAN & AMERSON, P.C.
10333 RICHMOND, SUITE 1100
HOUSTON, TX 77042

OC000000013650978
OC000000013650978

Date Mailed: 08/26/2004

Communication Regarding Rescission Of Nonpublication Request and/or Notice of Foreign Filing

Applicant's rescission of the previously-filed nonpublication request and/or notice of foreign filing is acknowledged. The paper has been reflected in the Patent and Trademark Office's (USPTO's) computer records so that the earliest possible projected publication date can be assigned.

The projected publication date is 12/02/2004.

If applicant rescinded the nonpublication request before or on the date of "foreign filing,"[1] then no notice of foreign filing is required.

If applicant foreign filed the application after filing the above application and before filing the rescission, and the rescission did not also include a notice of foreign filing, then a notice of foreign filing (not merely a rescission) is required to be filed within 45 days of the date of foreign filing. See 35 U.S.C. § 122(b)(2)(B)(iii), and Clarification of the United States Patent and Trademark Office's Interpretation of the Provisions of 35 U.S.C. § 122(b)(2)(B)(ii)-(iv), 1272 Off. Gaz. Pat. Office 22 (July 1, 2003).

If a notice of foreign filing is required and is not filed within 45 days of the date of foreign filing, then the application becomes abandoned pursuant to 35 U.S.C. § 122(b)(2)(B)(iii). In this situation, applicant should either file a petition to revive or notify the Office that the application is abandoned. See 37 CFR 1.137(f). Any such petition to revive will be forwarded to the Office of Petitions for a decision. Note that the filing of the petition will not operate to stay any period of reply that may be running against the application.

Questions regarding petitions to revive should be directed to the Office of Petitions at (703) 305-9282. Questions regarding publications of patent applications should be directed to the patent application publication hotline at (703) 605-4283 or by e-mail pgpub@uspto.gov.

[1] Note, for purpose of this notice, that "foreign filing" means "filing an application directed to the same invention in another country, or under a multilateral international agreement, that requires publication of applications 18 months after filing".

PART 1 - ATTORNEY/APPLICANT COPY

UNITED STATES PATENT AND TRADEMARK OFFICE

UNITED STATES DEPARTMENT OF COMMERCE
United States Patent and Trademark Office
Address: COMMISSIONER FOR PATENTS
P.O. Box 1450
Alexandria, Virginia 22313-1450
www.uspto.gov

APPLICATION NO.	FILING DATE	FIRST NAMED INVENTOR	ATTORNEY DOCKET NO.	CONFIRMATION NO.
10/135,145	04/30/2002	Gustavo Mata	2000.079600	5112

23720 7590 09/02/2004

WILLIAMS, MORGAN & AMERSON, P.C.
10333 RICHMOND, SUITE 1100
HOUSTON, TX 77042

EXAMINER	
GANDHI, JAYPRAKASH N	
ART UNIT	**PAPER NUMBER**
2125	

DATE MAILED: 09/02/2004

Please find below and/or attached an Office communication concerning this application or proceeding.

Petitioner STMICROELECTRONICS, INC.,
Ex. 1006, IPR2022-00681, Pg. 208

Advisory Action	Application No.	Applicant(s)	
	10/135,145	MATA ET AL.	
	Examiner	Art Unit	
	Jayprakash N Gandhi	2125	

--The MAILING DATE of this communication appears on the cover sheet with the correspondence address --

THE REPLY FILED FAILS TO PLACE THIS APPLICATION IN CONDITION FOR ALLOWANCE. Therefore, further action by the applicant is required to avoid abandonment of this application. A proper reply to a final rejection under 37 CFR 1.113 may only be either: (1) a timely filed amendment which places the application in condition for allowance; (2) a timely filed Notice of Appeal (with appeal fee); or (3) a timely filed Request for Continued Examination (RCE) in compliance with 37 CFR 1.114.

PERIOD FOR REPLY [check either a) or b)]

a) ☐ The period for reply expires _____months from the mailing date of the final rejection.

b) ☒ The period for reply expires on: (1) the mailing date of this Advisory Action, or (2) the date set forth in the final rejection, whichever is later. In no event, however, will the statutory period for reply expire later than SIX MONTHS from the mailing date of the final rejection.
ONLY CHECK THIS BOX WHEN THE FIRST REPLY WAS FILED WITHIN TWO MONTHS OF THE FINAL REJECTION. See MPEP 706.07(f).

Extensions of time may be obtained under 37 CFR 1.136(a). The date on which the petition under 37 CFR 1.136(a) and the appropriate extension fee have been filed is the date for purposes of determining the period of extension and the corresponding amount of the fee. The appropriate extension fee under 37 CFR 1.17(a) is calculated from: (1) the expiration date of the shortened statutory period for reply originally set in the final Office action; or (2) as set forth in (b) above, if checked. Any reply received by the Office later than three months after the mailing date of the final rejection, even if timely filed, may reduce any earned patent term adjustment. See 37 CFR 1.704(b).

1. ☐ A Notice of Appeal was filed on _____. Appellant's Brief must be filed within the period set forth in 37 CFR 1.192(a), or any extension thereof (37 CFR 1.191(d)), to avoid dismissal of the appeal.

2. ☐ The proposed amendment(s) will not be entered because:

(a) ☐ they raise new issues that would require further consideration and/or search (see NOTE below);

(b) ☐ they raise the issue of new matter (see Note below);

(c) ☐ they are not deemed to place the application in better form for appeal by materially reducing or simplifying the issues for appeal; and/or

(d) ☐ they present additional claims without canceling a corresponding number of finally rejected claims.

NOTE: _____.

3. ☐ Applicant's reply has overcome the following rejection(s): _____.

4. ☐ Newly proposed or amended claim(s) _____ would be allowable if submitted in a separate, timely filed amendment canceling the non-allowable claim(s).

5. ☒ The a)☐ affidavit, b)☐ exhibit, or c)☒ request for reconsideration has been considered but does NOT place the application in condition for allowance because: *See Continuation Sheet*.

6. ☐ The affidavit or exhibit will NOT be considered because it is not directed SOLELY to issues which were newly raised by the Examiner in the final rejection.

7. ☒ For purposes of Appeal, the proposed amendment(s) a)☐ will not be entered or b)☐ will be entered and an explanation of how the new or amended claims would be rejected is provided below or appended.

The status of the claim(s) is (or will be) as follows:

Claim(s) allowed: _____.

Claim(s) objected to: _____.

Claim(s) rejected: *1-53*.

Claim(s) withdrawn from consideration: _____.

8. ☐ The drawing correction filed on _____ is a)☐ approved or b)☐ disapproved by the Examiner.

9. ☐ Note the attached Information Disclosure Statement(s)(PTO-1449) Paper No(s). _____.

10. ☐ Other: _____

JNGandhi

Jayprakash N Gandhi
Primary Examiner
Art Unit: 2125

Petitioner STMICROELECTRONICS, INC.,
Ex. 1006, IPR2022-00681, Pg. 209

Continuation of 5. does NOT place the application in condition for allowance because: The examiner maintains the position that, the claims still do not define over the prior art .

Petitioner STMICROELECTRONICS, INC.,
Ex. 1006, IPR2022-00681, Pg. 210

UNITED STATES PATENT AND TRADEMARK OFFICE

UNITED STATES DEPARTMENT OF COMMERCE
United States Patent and Trademark Office
Address: COMMISSIONER FOR PATENTS
P.O. Box 1450
Alexandria, Virginia 22313-1450
www.uspto.gov

BIBDATASHEET

Bib Data Sheet

CONFIRMATION NO. 51

SERIAL NUMBER	FILING DATE	CLASS	GROUP ART UNIT	ATTORNEY DOCKE NO.
10/135,145	04/30/2002 RULE	700	2125	2000.079600

APPLICANTS

Gustavo Mata, Austin, TX;

Steven C. Nettles, Johnson City, TX;
Larry D. Barto, Austin, TX;Yiwei Li, Austin, TX;

** CONTINUING DATA **********

** FOREIGN APPLICATIONS **********

IF REQUIRED, FOREIGN FILING LICENSE GRANTED
** 05/17/2002

Foreign Priority claimed	STATE OR	SHEETS	TOTAL	INDEPENDE
☐ yes ☒ no	COUNTRY	DRAWING	CLAIMS	CLAIMS
35 USC 119 (a-d) conditions met ☐ yes ☐ no ☐ Met after Allowance	TX	6	53	6
Verified and Acknowledged _____ Examiner's Signature _____ Initials				

ADDRESS
023720
WILLIAMS, MORGAN & AMERSON, P.C.
10333 RICHMOND, SUITE 1100
HOUSTON , TX
77042

TITLE
Agent reactive scheduling in an automated manufacturing environment

FILING FEE	FEES: Authority has been given in Paper	
RECEIVED 1586	No. _____ to charge/credit DEPOSIT ACCOUNT No. _____ for following:	☐ All Fees ☐ 1.16 Fees (Filing) ☐ 1.17 Fees (Processing Ext. of time ☐ 1.18 Fees (Issue) ☐ Other _____ ☐ Credit

Index of Claims

Application No.	Applicant(s)	
10/135,145	MATA ET AL.	
Examiner	**Art Unit**	
Jayprakash N Gandhi	2125	

√	Rejected	–	(Through numeral) Cancelled	N	Non-Elected	A	Appeal
=	Allowed	÷	Restricted	I	Interference	O	Objected

Claim		Date	Claim		Date	Claim		Date
Final	Original	9/1/04	Final	Original	9/1/04	Final	Original	
	1	√		51	√		101	
	2	|		52	√		102	
	3	|		53	√		103	
	4	|		54			104	
	5	|		55			105	
	6	|		56			106	
	7	|		57			107	
	8	|		58			108	
	9	|		59			109	
	10	|		60			110	
	11	|		61			111	
	12	|		62			112	
	13	|		63			113	
	14	|		64			114	
	15	|		65			115	
	16	|		66			116	
	17	|		67			117	
	18	|		68			118	
	19	|		69			119	
	20	|		70			120	
	21	|		71			121	
	22	|		72			122	
	23	|		73			123	
	24	|		74			124	
	25	|		75			125	
	26	|		76			126	
	27	|		77			127	
	28	|		78			128	
	29	|		79			129	
	30	|		80			130	
	31	|		81			131	
	32	|		82			132	
	33	|		83			133	
	34	|		84			134	
	35	|		85			135	
	36	|		86			136	
	37	|		87			137	
	38	|		88			138	
	39	|		89			139	
	40	|		90			140	
	41	|		91			141	
	42	|		92			142	
	43	|		93			143	
	44	|		94			144	
	45	|		95			145	
	46	|		96			146	
	47	|		97			147	
	48	|		98			148	
	49	↓		99			149	
	50	√		100			150	

Petitioner STMICROELECTRONICS, INC.,
Ex. 1006, IPR2022-00681, Pg. 212

OIPE JC101
SEP 17 2004
PATENT & TRADEMARK OFFICE

AF/2125
IFW

PATENT

IN THE UNITED STATES PATENT AND TRADEMARK OFFICE

In re Application of: GUSTAVO MATA ET AL.	Group Art Unit: 2125
Serial No.: 10/135,145	Examiner: JAYPRAKASH N. GANDHI
Filed: 4/30/2002	Atty. Dkt. No.: 2000.079600/JAP
For: AGENT REACTIVE SCHEDULING IN AN AUTOMATED MANUFACTURING ENVIRONMENT	CUSTOMER NO. 23720

NOTICE OF APPEAL FROM THE PRIMARY EXAMINER
TO THE BOARD OF PATENT APPEALS AND INTERFERENCES

MAIL STOP AF
Commissioner for Patents
P.O. Box 1450
Alexandria, VA 22313-1450

CERTIFICATE OF MAILING 37 CFR 1.8

I hereby certify that this correspondence is being deposited with the United States Postal Service with sufficient postage as first class mail in an envelope addressed to: Commissioner for Patents, P.O. Box 1450, Alexandria, VA 22313-1450, on September 14, 2004.

Yolanda Murillo
Yolanda Murillo

Sir:

Applicants hereby appeal to the Board of Patent Appeals and Interferences from the decision of the Primary Examiner mailed June 15, 2004, finally rejecting claims 1-53.

The Assistant Commissioner is authorized to deduct the fee for filing this Notice of Appeal ($330.00), and any other fees required under 37 C.F.R. §§ 1.16 to 1.21 from the Advanced Micro Devices, Inc. Deposit Account No. 01-0365/TT4739. In the event the monies in that account are insufficient, the Assistant Commissioner is authorized to withdraw funds from Williams, Morgan & Amerson, P.C. Deposit Account No. 50-0786/2000.079600.

Please date stamp and return the enclosed postcard to evidence receipt of this document.

09/20/2004 AWONDAF1 00000014 010365 10135145
01 FC:1401 330.00 DA

Respectfully submitted,

Jeffrey A. Pyle
Reg. No. 34,904

Attorney for Applicants

WILLIAMS, MORGAN & AMERSON
CUSTOMER NUMBER: 23720

10333 Richmond Dr., Suite 1100
Houston, Texas 77042
(713) 934-7000

Date: September 14, 2004

Petitioner STMICROELECTRONICS, INC.,
Ex. 1006, IPR2022-00681, Pg. 214

OIPE JC1&8
NOV 24 2004
PATENT & TRADEMARK OFFICE

PATENT

IN THE UNITED STATES PATENT AND TRADEMARK OFFICE

In re Application of: GUSTAVO MATA ET AL.	Group Art Unit: 2125
Serial No.: 10/135,145	Examiner: JAYPRAKASH N. GANDHI
Filed: 4/30/2002	Atty. Dkt. No.: 2000.079600/JAP
For: AGENT REACTIVE SCHEDULING IN AN AUTOMATED MANUFACTURING ENVIRONMENT	CUSTOMER NO. 23720

APPEAL BRIEF

MAILSTOP APPEAL BRIEF-Patents
Commissioner for Patents
P.O. Box 1450
Alexandria, VA 22313-1450

Sir:

CERTIFICATE OF MAILING UNDER 37 C.F.R. § 1.8	
DATE OF DEPOSIT:	November 22, 2004
I hereby certify that this paper or fee is being deposited with the United States Postal Service with sufficient postage as "FIRST CLASS MAIL" addressed to: Commissioner for Patents, P.O. Box 1450, Alexandria, VA 22313-1450.	
Suzanne Stephens Signature	

On September 14, 2004, Appellants filed a Notice of Appeal in response to a Paper No. 13 dated June 15, 2004, issued in connection with the above-identified application, which was received and stamped by the USPTO Mailroom on June 18, 2004. In support of their appeal, Appellants hereby submit an original and two copies of this Appeal Brief to the Board of Patent Appeals and Interferences in response to the Paper No. 13 dated June 15, 2004 ("Paper No. 13"). The fee for filing this Appeal Brief is $340, and is authorized to be charged to Advanced Micro Devices, Inc. Deposit Account No. 01-0365/TT4739.

Also, a request for a one month extension of time to respond is included herewith. Enclosed is a check in the amount of $110 in payment for the extension. This one month extension will bring the due date to December 14, 2004. If the check is inadvertently omitted, or should any additional fees under 37 C.F.R. §§ 1.16 to 1.21 be required for any reason relating to

the enclosed material, or should an overpayment be included herein, the Director is authorized to deduct or credit said fees from or to Williams, Morgan & Amerson, P.C. Deposit Account No. 50-0786/2000.079600/JAP.

I. REAL PARTY IN INTEREST

Advanced Micro Devices, Inc., the assignee hereof, is the real party in interest.

II. RELATED APPEALS AND INTERFERENCES

There are no related appeals or interferences of which Applicant, Applicant's legal representative, or the Assignee is aware that will directly affect or be directly affected by or have a bearing on the decision in this appeal.

III. STATUS OF THE CLAIMS

Claims 1-53 are pending in the case, each having been originally filed. The "final" Office Action ("Paper No. 13") rejected each of claims 1-53 as anticipated under 35 U.S.C. § 102 (b) by U.S. Letters Patent 5,369,570 ("Parad"). Applicants traverse each of the rejections, and appeals each of them herein.

IV. STATUS OF AMENDMENTS

There were no amendments submitted after the "final" Office Action.

V. SUMMARY OF THE INVENTION

The invention, in its various aspects and embodiments, is a method and apparatus for scheduling in an automated manufacturing environment. One such automated manufacturing environment is the embodiment of **FIG. 1**, reproduced below. The illustrated portion of the process flow 100 includes two stations 105, each station 105 including a computing device 110 communicating with a process tool 115. The stations 105 communicate with one another over communications links 120. In the illustrated embodiment, the computing devices 110 and the communications links 120 comprise a portion of a larger computing system, *e.g.*, a network 125. The process tools 115 in **FIG. 1** are processing lots 130 of wafers 135 that will eventually become integrated circuit devices.

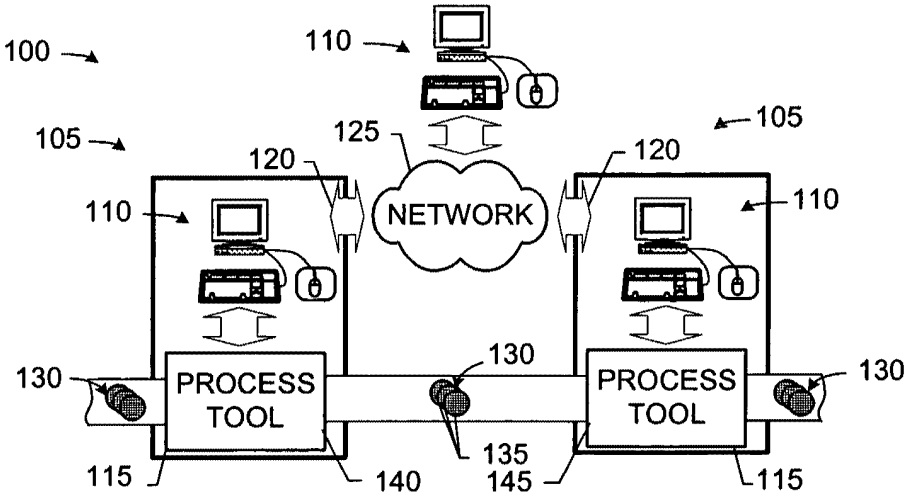

FIG. 1

Each computing device 110 includes, in the illustrated embodiment, a software agent 265, shown in **FIG. 2**, residing in the storage 210, also shown in **FIG. 2**. Note that the software agents 265 may reside in the process flow 100 in places other than the computing devices 110. The software agents 265 each represent some "manufacturing domain entity," *e.g.*, a lot 130, a process tool 115, a resource, a PM, or a Qual. The software agents 265, collectively, are

responsible for efficiently scheduling and controlling the lots 130 of wafers 135 through the fabrication process.

In one particular embodiment, a method in accordance with the present invention detects an occurrence of a predetermined event in a process flow, *e.g.*, the process flow 100 in **FIG. 1**. More particularly, the software agents 265 react to different events that occur within the process flow 100. These events are identified beforehand, *i.e.*, are "predetermined," so that appropriate activities in reaction to those events can be defined. The appropriate actions will depend on a number of factors including not only the type of manufacturing domain entity involved, but also the type of event that is involved. The predetermined events are categorized, in the illustrated embodiment, as one of three types: appointment state change, a factory state change, or an alarm event. The reactive scheduling performed upon the occurrence of any particular event will depend on the nature of the event and, to some degree, upon the particular implementation.

Next, the method notifies a software scheduling agent, *e.g.*, a scheduling agent 265 in **FIG. 2**, of the occurrence. Note that this implies a knowledge that such events are occurring within the process flow 100. To this end, in the illustrated embodiment, the software agents 265 respond to additional software components, not shown, known as "publishers" (or, "notifiers") and "subscribers." Agents create listeners which subscribe to one or more notifiers. Notifiers "publish" events to their subscribing listeners when changes occur within the factory. Listeners, in turn, call their subscribing software agent 265. Through a network of these types of publishers and subscribers, the scheduling agents 265 can be kept apprised of events occurring in the process flow 100.

The method then reactively schedules an action from the software scheduling agent, *e.g.*, the software scheduling agent 265, responsive to the detection of the predetermined event.

Typically, in the illustrated embodiment, reactive scheduling by the software agents 265 effects changes to appointments that were, in the first instance, proactively scheduled. However, this is not necessary to the practice of the invention. For instance, in one particular embodiment, the software agents 265 schedule activities in reaction to a machine failure which causes the machine to stop processing and requires a period of downtime in order to repair the machine. There usually would not be any proactively scheduled appointment for such an event since a machine failure usually cannot be predicted in advance.

Alternative embodiments include a computing system programmed to perform this method, *see* **FIG. 2**, and a computer-readable program storage medium, *e.g.*, the optical disk 230 or floppy electromagnetic disk 235 in **FIG. 2**, encoded with instructions to implement this method. In still another embodiment, the invention includes automated manufacturing environment, *see* **FIG. 1**, comprising a process flow and a computing system. The computing system further includes a plurality of software scheduling agents residing thereon, the software scheduling agents being capable of reactively scheduling appointments for activities in the process flow responsive to a plurality of predetermined events.

VI. ISSUE ON APPEAL

Whether claims 1-53 are anticipated under 35 U.S.C. § 102 (b) by U.S. Letters Patent 5,369,570 ("Parad").

VII. GROUPING OF THE CLAIMS

The claims rise and fall together.

VIII. ARGUMENT

Paper No. 13 rejected claims 1-53 as anticipated under 35 U.S.C. § 102 (b) by U.S. Letters Patent 5,369,570 ("Parad"). An anticipating reference, by definition, must disclose every limitation of the rejected claim in the same relationship to one another as set forth in the claim. M.P.E.P. § 2131; *In re Bond*, 15 U.S.P.Q.2d (BNA) 1566, 1567 (Fed. Cir. 1990). Applicants respectfully submit that Parad fails to meet this strict standard and that the rejections fail procedurally.

A. PARAD FAILS TO DISCLOSE ALL THE CLAIM LIMITATIONS

Each of the independent claims 1, 12, 19, 26, 33 and 44 recites a "software scheduling agent." Paper No. 13 concedes that Parad fails to expressly disclose a software scheduling agent, but alleges that such is an "inherent property of Parad [*sic*] invention." Inherency in anticipation requires that the asserted proposition *necessarily* flow from the disclosure. *In re Oelrich*, 212 U.S.P.Q. (BNA) 323, 326 (C.C.P.A. 1981); *Ex parte Levy*, 17 U.S.P.Q.2d (BNA) 1461, 1463-1464 (Pat. & Tm. Off. Bd. Pat. App. & Int. 1990); *Ex parte Skinner*, 2 U.S.P.Q.2d (BNA) 1788, 1789 (Bd. Pat. App. & Int. 1987).

To inherently anticipate, it is not enough that a reference could have, should have, or would have been used as the claimed invention. "The mere fact that a certain thing *may* result from a given set of circumstances is not sufficient." *Oelrich*, at 326, quoting *Hansgirg v. Kemmer*, 40 U.S.P.Q. (BNA) 665, 667 (C.C.P.A. 1939); *In re Rijckaert*, 28 U.S.P.Q.2d (BNA) 1955, 1957 (Fed. Cir. 1993), quoting *Oelrich*, at 326; *see also Skinner*, at 1789. "Inherency... may not be established by probabilities or possibilities. The mere fact that a certain thing may result from a given set of circumstances is not sufficient." *Skinner*, at 1789.

The existence of a "software scheduling agent" does not necessarily flow from Parad's disclosure, and thus is not inherently disclosed therein. Parad expressly states at col. 7, lines 53-54 that "[t]he present invention may be implemented in any combination of software, firmware, or hardware...." Thus, even if the Office can identify some functionality, or collection of functionalities, corresponding to that of Applicants' claimed "software scheduling agent," such functionality need not necessarily be implemented in software in Parad. Parad's own disclosure establishes that such functionality could be implemented in, for example, hardware, as opposed to software.

Consequently, it does not necessarily flow that such functionality would be implemented in a "software scheduling agent", and Parad fails to inherently teach such a limitation. The Office has already conceded that Parad does not expressly teach a "software scheduling agent." Accordingly, Parad fails to anticipate any of the claims. *In re Oelrich*, 212 U.S.P.Q. (BNA) 323, 326 (C.C.P.A. 1981); *Ex parte Levy*, 17 U.S.P.Q.2d (BNA) 1461, 1463-1464 (Pat. & Tm. Off. Bd. Pat. App. & Int. 1990); *Ex parte Skinner*, 2 U.S.P.Q.2d (BNA) 1788, 1789 (Bd. Pat. App. & Int. 1987).

B. THE *PRIMA FACIE* CASE IS DEFICIENT

"It is by now well settled that the burden of establishing a *prima facie* case of anticipation resides with the Patent and Trademark Office. *In re Piasecki*, 745 F.2d 1468, 1472, 223 U.S.P.Q. 785, 788 (Fed. Cir. 1984), quoting *In re Warner*, 379 F.2d 1011, 1016, 154 U.S.P.Q. 173, 177 (C.C.P.A. 1967); *Ex parte Skinner*, 2 U.S.P.Q.2d (BNA) 1788, 1788-89 (Bd. Pat. App. & Int. 1987). "[I]t is incumbent upon the examiner to identify wherein each and every facet of the claimed invention is disclosed in the applied reference." *Ex parte Levy*, 17 U.S.P.Q.2d (BNA) 1461, 1462 (Pat. & Tm. Off. Bd. Pat. App. & Int. 1990). Where anticipation is found

through inherency, the Office's burden of establishing *prima facie* anticipation includes the burden of providing "...some evidence or scientific reasoning to establish the reasonableness of the examiner's belief that the functional limitation is an inherent characteristic of the prior art." *Ex parte Skinner*, 2 U.S.P.Q.2d (BNA) 1788, 1789 (Bd. Pat. App. & Int. 1987).

Applicants respectfully submit that Paper No. 13 fails to *prima facie* establish anticipation by Parad. This is most apparent with respect to the Office's reliance on the supposedly inherent teachings of Parad. As was established above, each of the independent claims recites a "software scheduling agent," which the Office concedes Parad does not teach but alleges that Parad inherently discloses. The entire treatment of this issue in Paper No. 10 is:

> Parad does not positively disclose of [*sic*] having software-scheduling agent, but the claimed element is [an] inherent property of Parad invention.

Noticeably lacking is any semblance of any evidence or scientific reasoning as to why the disclosure of Parad inherently discloses this limitation. Since such is required by law to make the *prima facie* case, the *prima facie* case is deficient. *Ex parte Skinner*, 2 U.S.P.Q.2d (BNA) 1788, 1789 (Bd. Pat. App. & Int. 1987).

C. THE OFFICE'S RESPONSE TO APPLICANTS' POSITION

In response to the arguments supporting Applicants' position, the Office offered the unsupported statement that:

> ...Applicant's definition of the term "***software scheduling agent***" is very broad and can be interpreted as any body involving in scheduling can be considered as an ***software scheduling agent***, because method, medium, system, apparatus and manufacturing are claimed and NOT software programming and therefore Parad (figure 1, elements 105 – 108) meets all the claimed invention."

Paper No. 13, Detailed Action, p. 3, ¶ 2. As earlier noted, the Office has the duty to make the *prima facie* case with particularity, *Ex parte Levy*, 17 U.S.P.Q.2d (BNA) 1461, 1462 (Pat. & Tm. Off. Bd. Pat. App. & Int. 1990) (identify each element of the claimed invention in the prior art); *Ex parte Skinner*, 2 U.S.P.Q.2d (BNA) 1788, 1788-89 (Bd. Pat. App. & Int. 1987) (provide reasoning supporting inherency allegation), which this statement fatally lacks.

There is no support in Applicants' specification for the proposition that a scheduling agent represent more than one manufacturing domain entity at any given time or that a scheduling agent be implemented in anything other than software. Thus, there is no support for a definition of the term "software scheduling agent" in which an entity represents, for instance, a whole subsystem comprising large numbers of manufacturing domain entities. Nor is there any support for the prospect that a scheduling agent be implemented in, for instance, hardware. Note that the claims in issue actually recite a *software* scheduling agent, as is conceded by placing the term "software scheduling agent" in quotations. The passage quoted above is therefore erroneous on its face. However much the Office might wish to the contrary, the statement that *any* software entity that schedules constitutes a software scheduling agent is clearly wrong.

Furthermore, although not clear from the quoted passage, it appears to Applicants that the Office may be taking the position that the software aspect of the scheduling agent is immaterial because "software programming" is not claimed. The Office apparently makes this argument to obviate Applicant's inherency argument with respect to Parad. Each of the claims expressly recites a "software scheduling agent", and each of those limitations must be disclosed in the prior art as required by *In re Bond*, 15 U.S.P.Q.2d (BNA) 1566, 1567 (Fed. Cir. 1990) (anticipating reference must disclose every limitation of the rejected claim in the same relationship to one another as set forth in the claim).

Applicants also note that, for the first time, the Office attempted in Paper No. 13 to identify something it associates with "software scheduling agents" in Parad. Paper No. 13, Detailed Action, p. 3, ¶ 2. The Office identifies elements 105 – 108 in Figure 1. Applicants note that Figure 1 is a flowchart of a method (Parad, col. 5, l. 66-67), and elements 105 – 108, which are functionalities of some aspect of Parad's system (col. 9, l. 19-33). However, as Applicants earlier noted:

> Parad expressly states at col. 7, lines 53-54 that "[t]he present invention may be implemented in any combination of software, firmware, or hardware...." Thus, even if the Office can identify some functionality, or collection of functionalities, corresponding to that of Applicants' claimed "software scheduling agent," such functionality need not necessarily be implemented in software. Parad's own disclosure establishes that such functionality could be implemented in, for example, hardware, as opposed to software.

Response to Office Action Dated January 16, 2004, p. 4. Thus, the disclosure of the elements 105 – 108 to which the Office finally points fails to inherently disclose a "software scheduling agent." *In re Oelrich*, 212 U.S.P.Q. (BNA) 323, 326 (C.C.P.A. 1981); *Ex parte Levy*, 17 U.S.P.Q.2d (BNA) 1461, 1463-1464 (Pat. & Tm. Off. Bd. Pat. App. & Int. 1990); *Ex parte Skinner*, 2 U.S.P.Q.2d (BNA) 1788, 1789 (Bd. Pat. App. & Int. 1987).

IX. CLAIMS IN ISSUE

The claims in issue are set forth in the APPENDIX hereto.

X. CONCLUSION

Applicants therefore respectfully submit that all claims 1-53 are in condition for allowance. Each of the independent claims recites a "software scheduling agent", which the Office has admitted Parad does not expressly teach. The Office alleges that Parad teaches this

limitation inherently, but Parad fails on its face to meet the legal tests for inherent disclosure. Even if it did not, the Office has failed to adequately support its position that it does. Accordingly, Applicants request that the rejections be overturned.

Please date stamp and return the enclosed postcard to evidence receipt of this document.

Respectfully submitted,

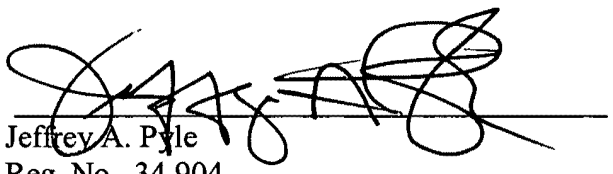

Date: November 22, 2004

Jeffrey A. Pyle
Reg. No. 34,904
Attorney for Applicants

WILLIAMS, MORGAN & AMERSON
CUSTOMER NUMBER: 23720

10333 Richmond Dr., Suite 1100
Houston, Texas 77042
(713) 934-4053 ph

APPENDIX
(Claims in Issue)

1. (Original) A method for scheduling in an automated manufacturing environment, comprising:

detecting an occurrence of a predetermined event in a process flow;

notifying a software scheduling agent of the occurrence; and

reactively scheduling an action from the software scheduling agent responsive to the detection of the predetermined event.

2. (Original) The method of claim 1, wherein detecting the occurrence of the predetermined event includes detecting an unplanned event or an unexpected event.

3. (Original) The method of claim 1, wherein detecting the occurrence of the predetermined event includes detecting an occurrence of one of an appointment state change, a factory state change, and an alarm event.

4. (Original) The method of claim 3, wherein detecting the appointment state change includes detecting at least one of an appointment cancellation, an appointment expansion, an appointment shrinking, an appointment abort, an appointment changing status, an appointment shift, an appointment override, an transport time update, a load time update, an unload time update, a lot joining a batch, a lot leaving a batch, canceling a lot from a batch, and a commitment window update.

5. (Original) The method of claim 3, wherein detecting the factory state change includes detecting at least one of detection of a downtime occurrence; a machine becoming available; a PM/Qual being detected; a chamber going down; a chamber becoming available, a change in machine capabilities; a change in machine types; an addition of a process; an addition of a process operation; a lot arriving at a machine; a lot process changed, a lot placed on hold, a lot released from hold, a lot priority changed, a lot due date changed, a lot wafer count changed, a lot process operation changed, and a lot departing a machine.

6. (Original) The method of claim 3, wherein detecting the alarm event includes detecting at least one of an alarm firing for an appointment start time and an alarm firing for an appointment end time.

7. (Original) The method of claim 1, wherein detecting the predetermined event includes detecting at least one of an appointment cancellation, an appointment expansion, an appointment shrinking, an appointment abort, an appointment becoming active, an appointment nearing completion, an appointment completing, an appointment shift, an appointment override, and a commitment window update, detection of a downtime occurrence; a machine becoming available; a PM/Qual being detected; a chamber going down; a chamber becoming available, a change in machine capabilities; a change in machine types; an addition of a process; an addition of a process operation; a lot arriving at a machine; a lot process changed, a lot placed on hold, a lot released from hold, a lot priority changed, a lot due date changed, a lot wafer count changed, a lot process operation changed, a lot departing a machine, an alarm firing for an appointment start time and an alarm firing for an appointment end time.

8. (Original) The method of claim 1, wherein notifying the software scheduling agent of the occurrence includes:

sending an indication of the occurrence to a publisher;

publishing the occurrence from the publisher to a subscribing listener; and

calling the software scheduling agent from the subscribing listener.

9. (Original) The method of claim 1, wherein reactively scheduling the action includes at least one of aborting a scheduled appointment in progress; canceling a scheduled appointment before it begins; scheduling a new appointment; starting a scheduled appointment; expanding the duration of a scheduled appointment; shrinking the duration of a scheduled appointment; shifting a scheduled appointment; adding new processing capabilities; deleting old processing capabilities; setting an alarm; canceling an alarm; and changing the status of an appointment.

10. (Original) The method of claim 1, further comprising proactively scheduling an appointment with which the predetermined event is associated.

11. (Original) The method of claim 10, wherein proactively scheduling the appointment includes proactively scheduling the appointment from the software scheduling agent.

12. (Original) A computer-readable, program storage medium encoded with instructions that, when executed by a computer, perform a method for scheduling in an automated manufacturing environment, the method comprising:

detecting an occurrence of a predetermined event in a process flow;

notifying a software scheduling agent of the occurrence; and

reactively scheduling an action from the software scheduling agent responsive to the detection of the predetermined event.

13. (Original) The program storage medium of claim 12, wherein detecting the occurrence of the predetermined event in the encoded method includes detecting an unplanned event or an unexpected event.

14. (Original) The program storage medium of claim 12, wherein detecting the occurrence of the predetermined event in the encoded method includes detecting an occurrence of one of an appointment state change, a factory state change, and an alarm event.

15. (Original) The program storage medium of claim 12, wherein detecting the predetermined event in the encoded method includes detecting at least one of an appointment cancellation, an appointment expansion, an appointment shrinking, an appointment abort, an appointment changing status, an appointment shift, an appointment override, an transport time update, a load time update, an unload time update, a lot joining a batch, a lot leaving a batch, canceling a lot from a batch, a commitment window update, detection of a downtime occurrence; a machine becoming available; a PM/Qual being detected; a chamber going down; a chamber becoming available, a change in machine capabilities; a change in machine types; an addition of a process; an addition of a process operation; a lot arriving at a machine; a lot process changed, a lot placed on hold, a lot released from hold, a lot priority changed, a lot due date changed, a lot wafer count changed, a lot process operation changed, a lot departing a machine, an alarm firing for an appointment start time and an alarm firing for an appointment end time.

16. (Original) The program storage medium of claim 12, wherein notifying the software scheduling agent of the occurrence in the encoded method includes:

sending an indication of the occurrence to a publisher;

publishing the occurrence from the publisher to a subscribing listener; and

calling the software scheduling agent from the subscribing listener.

17. (Original) The program storage medium of claim 12, wherein reactively scheduling the action in the encoded method includes at least one of aborting a scheduled appointment in progress; canceling a scheduled appointment before it begins; scheduling a new appointment; starting a scheduled appointment; expanding the duration of a scheduled appointment; shrinking the duration of a scheduled appointment; shifting a scheduled appointment; adding new processing capabilities; deleting old processing capabilities; setting an alarm; canceling an alarm; and changing the status of an appointment.

18. (Original) The program storage medium of claim 12, wherein the encoded method further comprises proactively scheduling an appointment with which the predetermined event is associated.

19. (Original) A computing system programmed to perform a method for scheduling in an automated manufacturing environment, the method comprising:

detecting an occurrence of a predetermined event in a process flow;

notifying a software scheduling agent of the occurrence; and

reactively scheduling an action from the software scheduling agent responsive to the detection of the predetermined event.

20. (Original) The computing system of claim 19, wherein detecting the occurrence of the predetermined event in the programmed method includes detecting an unplanned event or an unexpected event.

21. (Original) The computing system of claim 19, wherein detecting the occurrence of the predetermined event in the programmed method includes detecting an occurrence of one of an appointment state change, a factory state change, and an alarm event.

22. (Original) The computing system of claim 19, wherein detecting the predetermined event in the programmed method includes detecting at least one of an appointment cancellation, an appointment expansion, an appointment shrinking, an appointment abort, an appointment changing status, an appointment shift, an appointment override, an transport time update, a load time update, an unload time update, a lot joining a batch, a lot leaving a batch, canceling a lot from a batch, a commitment window update, detection of a downtime occurrence; a machine becoming available; a PM/Qual being detected; a chamber going down; a chamber becoming available, a change in machine capabilities; a change in machine types; an addition of a process; an addition of a process operation; a lot arriving at a machine; a lot process changed, a lot placed on hold, a lot released from hold, a lot priority changed, a lot due date changed, a lot wafer count changed, a lot process operation changed, a lot departing a machine, an alarm firing for an appointment start time and an alarm firing for an appointment end time.

23. (Original) The computing system of claim 19, wherein notifying the software scheduling agent of the occurrence in the programmed method includes:

sending an indication of the occurrence to a publisher;

publishing the occurrence from the publisher to a subscribing listener; and

calling the software scheduling agent from the subscribing listener.

24. (Original) The computing system of claim 19, wherein reactively scheduling the action in the programmed method includes at least one of aborting a scheduled appointment in progress; canceling a scheduled appointment before it begins; scheduling a new appointment; starting a scheduled appointment; expanding the duration of a scheduled appointment; shrinking the duration of a scheduled appointment; shifting a scheduled appointment; adding new processing capabilities; deleting old processing capabilities; setting an alarm; canceling an alarm; and changing the status of an appointment.

25. (Original) The computing system of claim 19, wherein the encoded method further comprises proactively scheduling an appointment with which the predetermined event is associated.

26. (Original) An apparatus for scheduling in an automated manufacturing environment, the apparatus comprising:

means for detecting an occurrence of a predetermined event in a process flow;

means for notifying a software scheduling agent of the occurrence; and

means for reactively scheduling an action from the software scheduling agent responsive to the detection of the predetermined event.

27. (Original) The method of claim 26, wherein the means for detecting the occurrence of the predetermined event includes means for detecting an unplanned event or an unexpected event.

28. (Original) The method of claim 26, wherein the means for detecting the occurrence of the predetermined event includes means for detecting an occurrence of one of an appointment state change, a factory state change, and an alarm event.

29. (Original) The method of claim 26, wherein the means for detecting the predetermined event includes means for detecting at least one of an appointment cancellation, an appointment expansion, an appointment shrinking, an appointment abort, an appointment changing status, an appointment shift, an appointment override, an transport time update, a load time update, an unload time update, a lot joining a batch, a lot leaving a batch, canceling a lot from a batch, a commitment window update, detection of a downtime occurrence; a machine becoming available; a PM/Qual being detected; a chamber going down; a chamber becoming available, a change in machine capabilities; a change in machine types; an addition of a process; an addition of a process operation; a lot arriving at a machine; a lot process changed, a lot placed on hold, a lot released from hold, a lot priority changed, a lot due date changed, a lot wafer count changed, a lot process operation changed, a lot departing a machine, an alarm firing for an appointment start time and an alarm firing for an appointment end time.

30. (Original) The method of claim 26, wherein the means for notifying the software scheduling agent of the occurrence includes:

means for sending an indication of the occurrence to a publisher;

means for publishing the occurrence from the publisher to a subscribing listener; and

means for calling the software scheduling agent from the subscribing listener.

31. (Original) The method of claim 26, wherein the means for reactively scheduling the action includes means for at least one of aborting a scheduled appointment in progress; canceling a scheduled appointment before it begins; scheduling a new appointment; starting a scheduled appointment; expanding the duration of a scheduled appointment; shrinking the duration of a scheduled appointment; shifting a scheduled appointment; adding new processing capabilities; deleting old processing capabilities; setting an alarm; canceling an alarm; and changing the status of an appointment.

32. (Original) The method of claim 26, further comprising means for proactively scheduling an appointment with which the predetermined event is associated.

33. (Original) An automated manufacturing environment, comprising:

a process flow; and

a computing system, including a plurality of software scheduling agents residing thereon, the software scheduling agents being capable of reactively scheduling appointments for activities in the process flow responsive to a plurality of predetermined events.

34. (Original) The automated manufacturing environment of claim 33, further comprising a plurality of publishers and subscribers capable of detecting an occurrence of one of the predetermined events in the process flow and notifying one of the software scheduling agent of the occurrence.

35. (Original) The automated manufacturing environment of claim 34, wherein detecting the occurrence of the predetermined event includes detecting an unplanned event or an unexpected event.

36. (Original) The automated manufacturing environment of claim 34, wherein detecting the occurrence of the predetermined event includes detecting an occurrence of one of an appointment state change, a factory state change, and an alarm event.

37. (Original) The automated manufacturing environment of claim 34, wherein detecting the predetermined event includes detecting at least one of an appointment cancellation, an appointment expansion, an appointment shrinking, an appointment abort, an appointment changing status, an appointment shift, an appointment override, an transport time update, a load time update, an unload time update, a lot joining a batch, a lot leaving a batch, canceling a lot from a batch, a commitment window update, detection of a downtime occurrence; a machine becoming available; a PM/Qual being detected; a chamber going down; a chamber becoming available, a change in machine capabilities; a change in machine types; an addition of a process; an addition of a process operation; a lot arriving at a machine; a lot process changed, a lot placed on hold, a lot released from hold, a lot priority changed, a lot due date changed, a lot wafer count changed, a lot process operation changed, and a lot departing a machine, an alarm firing for an appointment start time and an alarm firing for an appointment end time.

38. (Original) The automated manufacturing environment of claim 34, wherein notifying the software scheduling agent of the occurrence includes:

sending an indication of the occurrence to a publisher;

publishing the occurrence from the publisher to a subscribing listener; and

calling the software scheduling agent from the subscribing listener.

39. (Original) The automated manufacturing environment of claim 34, wherein reactively scheduling the action includes at least one of aborting a scheduled appointment in progress; canceling a scheduled appointment before it begins; scheduling a new appointment; starting a scheduled appointment; expanding the duration of a scheduled appointment; shrinking the duration of a scheduled appointment; shifting a scheduled appointment; adding new processing capabilities; deleting old processing capabilities; setting an alarm; canceling an alarm; and changing the status of an appointment.

40. (Original) The automated manufacturing environment of claim 34, further comprising proactively scheduling an appointment with which the predetermined event is associated.

41. (Original) The automated manufacturing environment of claim 33, further comprising at least one of a manufacturing execution system and an automated materials handling system.

42. (Original) The automated manufacturing environment of claim 33, wherein the computing system is at least one of a local area network, a wide area network, a system area network, an intranet, or a portion of the Internet.

43. (Original) The automated manufacturing environment of claim 33, wherein the process flow comprises a portion of a semiconductor manufacturing facility.

44. (Original) An automated manufacturing environment, comprising:

a plurality of work pieces;

a plurality of processing stations through which the work pieces may be processed;

a plurality of software scheduling agents capable of scheduling appointments for processing the work pieces through the process stations, the software scheduling agents capable of reactively scheduling responsive to predetermined events.

45. (Original) The automated manufacturing environment of claim 44, further comprising a plurality of publishers and subscribers capable of detecting an occurrence of one of the predetermined events in the process flow and notifying one of the software scheduling agent of the occurrence.

46. (Original) The automated manufacturing environment of claim 45, wherein detecting the occurrence of the predetermined event includes detecting an unplanned event or an unexpected event.

47. (Original) The automated manufacturing environment of claim 45, wherein detecting the occurrence of the predetermined event includes detecting an occurrence of one of an appointment state change, a factory state change, and an alarm event.

48. (Original) The automated manufacturing environment of claim 45, wherein detecting the predetermined event includes detecting at least one of an appointment cancellation, an appointment expansion, an appointment shrinking, an appointment abort, an appointment

changing status, an appointment shift, an appointment override, an transport time update, a load time update, an unload time update, a lot joining a batch, a lot leaving a batch, canceling a lot from a batch, a commitment window update, detection of a downtime occurrence; a machine becoming available; a PM/Qual being detected; a chamber going down; a chamber becoming available, a change in machine capabilities; a change in machine types; an addition of a process; an addition of a process operation; a lot arriving at a machine; a lot process changed, a lot placed on hold, a lot released from hold, a lot priority changed, a lot due date changed, a lot wafer count changed, a lot process operation changed, a lot departing a machine, an alarm firing for an appointment start time and an alarm firing for an appointment end time.

49. (Original) The automated manufacturing environment of claim 45, wherein notifying the software scheduling agent of the occurrence includes:

sending an indication of the occurrence to a publisher;

publishing the occurrence from the publisher to a subscribing listener; and

calling the software scheduling agent from the subscribing listener.

50. (Original) The automated manufacturing environment of claim 45, wherein reactively scheduling the action includes at least one of aborting a scheduled appointment in progress; canceling a scheduled appointment before it begins; scheduling a new appointment; starting a scheduled appointment; expanding the duration of a scheduled appointment; shrinking the duration of a scheduled appointment; shifting a scheduled appointment; adding new processing capabilities; deleting old processing capabilities; setting an alarm; canceling an alarm; and changing the status of an appointment.

51. (Original) The automated manufacturing environment of claim 45, further comprising proactively scheduling an appointment with which the predetermined event is associated.

52. (Original) The automated manufacturing environment of claim 44, further comprising at least one of a manufacturing execution system and an automated materials handling system.

53. (Original) The automated manufacturing environment of claim 44, wherein the computing system is at least one of a local area network, a wide area network, a system area network, an intranet, or a portion of the Internet.

OIPE JC156
NOV 24 2004
PATENT & TRADEMARK OFFICE

PATENT

IN THE UNITED STATES PATENT AND TRADEMARK OFFICE

In re Application of: GUSTAVO MATA ET AL.	Group Art Unit: 2125
Serial No.: 10/135,145	Examiner: JAYPRAKASH N. GANDHI
Filed: 4/30/2002	Atty. Dkt. No.: 2000.079600/JAP
For: AGENT REACTIVE SCHEDULING IN AN AUTOMATED MANUFACTURING ENVIRONMENT	CUSTOMER NO. 23720

REQUEST FOR EXTENSION OF TIME TO FILE APPEAL BRIEF

CERTIFICATE OF MAILING
37 C.F.R 1.8

I hereby certify that this correspondence is being deposited with the U.S. Postal Service with sufficient postage as First Class Mail in an envelope addressed to: Assistant Commissioner for Patents, Washington, D.C. 20231, on the date below:

November 22, 2004 (Date) Suzanne Stephens (Signature)

Assistant Commissioner for Patents
Washington, D.C. 20231

Sir:

Pursuant to 37 C.F.R. § 1.136(a), Applicants petition for an extension of time of one month to and including December 14, 2004 in which to file an Appeal Brief.

A check in the amount of $110.00 is enclosed, which includes the process fee ($110.00) for a one month extension of time. If the check is inadvertently omitted, or should any additional fees be required for any reason relating to the enclosed materials, or should an overpayment be included herein, the Assistant Commissioner is authorized to deduct or credit said fees from or to Williams, Morgan & Amerson, P.C. Deposit Account No. 50-0786/2000.079600/JAP.

Please date stamp and return the accompanying postcard to evidence receipt of these documents.

11/26/2004 ZJUHAR1 00000026 10135145
01 FC:1251 110.00 OP

Respectfully submitted,

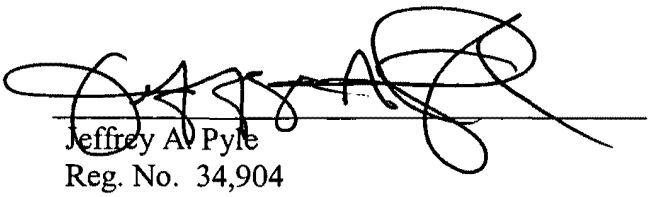

Date: November 22, 2004

Jeffrey A. Pyle
Reg. No. 34,904
WILLIAMS, MORGAN & AMERSON
7676 Hillmont, Suite 250
Houston, Texas 77040
(713) 934-4055 ph
(713) 934-7011 fx

ATTORNEY FOR APPLICANTS

Petitioner STMICROELECTRONICS, INC.,
Ex. 1006, IPR2022-00681, Pg. 238

OIPE JC156 NOV 24 2004 PATENT & TRADEMARK OFFICE

AF / IDW

WILLIAMS, MORGAN & AMERSON, P.C.

10333 RICHMOND, STE. 1100, HOUSTON, TEXAS 77042

(713) 934-7000 FAX: (713) 934-7011

Danny L. Williams
Terry D. Morgan
J. Mike Amerson
Kenneth D. Goodman
Jeffrey A. Pyle
Jaison C. John
Ruben S. Bains

Shelley P.M. Fussey, Ph.D.*
Mark D. Moore, Ph.D.*
Raymund F. Eich, Ph.D.*
Daren C. Davis*
Mark W. Sincell, Ph.D.*

*Patent Agent

November 22, 2004

FILE: 2000.079600

WRITER'S DIRECT DIAL:
713.934.4053

CERTIFICATE OF MAILING
37 C.F.R. § 1.8

I hereby certify that this correspondence is being deposited with the U.S. Postal Service with sufficient postage as First Class Mail in an envelope addressed to: Commissioner for Patents, P.O. Box 1450, Alexandria, VA 22313-1450, on the date below:

11-22-04 Suzanne Stephens
Date Signature

APPEAL BRIEF-PATENTS
Commissioner for Patents
United States Patent and Trademark Office
Alexandria, VA 22313-1450

RE: *U.S. Patent Application Serial No. 10/135,145*
Entitled "Agent Reactive Scheduling In An Automated Manufacturing Environment"
Inventor(s): Gustavo Mata, et al
Client's Reference: TT739

Sir:

Transmitted herewith for filing are:

1. An Appeal Brief (an original and two copies);

2. A Request for an Extension of Time of one month to and including December 14, 2004;

3. A check for $110 to cover the extension fee(s); and

4. A return postcard to acknowledge receipt of these materials. Please date stamp and mail this postcard.

If the check is inadvertently omitted, or should any additional fees under 37 C.F.R. §§ 1.16 to 1.21 be required for any reason relating to the enclosed materials, or should an overpayment be included herein, the Director is authorized to deduct or credit said fees from or to Williams, Morgan & Amerson, P.C. Deposit Account No. 50-0786/2000.079600/JAP.

Customer No. 23720

Respectfully submitted,

Jeffrey A. Pyle
Reg. No. 34,904

JAP/sbs
Encl.

OIPE JC18
NOV 24 2004
PATENT & TRADEMARK OFFICE

IN THE UNITED STATES PATENT AND TRADEMARK OFFICE

In re Application of: GUSTAVO MATA ET AL.	Group Art Unit: 2125
Serial No.: 10/135,145	Examiner: JAYPRAKASH N. GANDHI
Filed: 4/30/2002	Atty. Dkt. No.: 2000.079600/JAP
For: AGENT REACTIVE SCHEDULING IN AN AUTOMATED MANUFACTURING ENVIRONMENT	CUSTOMER NO. 23720

APPEAL BRIEF

MAILSTOP APPEAL BRIEF-Patents
Commissioner for Patents
P.O. Box 1450
Alexandria, VA 22313-1450

Sir:

CERTIFICATE OF MAILING UNDER 37 C.F.R. § 1.8	
DATE OF DEPOSIT:	November 22, 2004

I hereby certify that this paper or fee is being deposited with the United States Postal Service with sufficient postage as "FIRST CLASS MAIL" addressed to: Commissioner for Patents, P.O. Box 1450, Alexandria, VA 22313-1450.

Suzanne Stephens
Signature

On September 14, 2004, Appellants filed a Notice of Appeal in response to a Paper No. 13 dated June 15, 2004, issued in connection with the above-identified application, which was received and stamped by the USPTO Mailroom on June 18, 2004. In support of their appeal, Appellants hereby submit an original and two copies of this Appeal Brief to the Board of Patent Appeals and Interferences in response to the Paper No. 13 dated June 15, 2004 ("Paper No. 13"). The fee for filing this Appeal Brief is $340, and is authorized to be charged to Advanced Micro Devices, Inc. Deposit Account No. 01-0365/TT4739.

Also, a request for a one month extension of time to respond is included herewith. Enclosed is a check in the amount of $110 in payment for the extension. This one month extension will bring the due date to December 14, 2004. If the check is inadvertently omitted, or should any additional fees under 37 C.F.R. §§ 1.16 to 1.21 be required for any reason relating to

limitation inherently, but Parad fails on its face to meet the legal tests for inherent disclosure. Even if it did not, the Office has failed to adequately support its position that it does. Accordingly, Applicants request that the rejections be overturned.

Please date stamp and return the enclosed postcard to evidence receipt of this document.

Respectfully submitted,

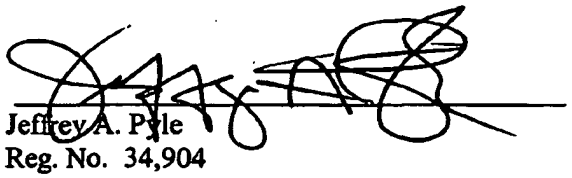

Date: November 22, 2004

Jeffrey A. Pyle
Reg. No. 34,904
Attorney for Applicants

WILLIAMS, MORGAN & AMERSON
CUSTOMER NUMBER: 23720

10333 Richmond Dr., Suite 1100
Houston, Texas 77042
(713) 934-4053 ph

UNITED STATES PATENT AND TRADEMARK OFFICE

UNITED STATES DEPARTMENT OF COMMERCE
United States Patent and Trademark Office
Address: COMMISSIONER FOR PATENTS
P.O. Box 1450
Alexandria, Virginia 22313-1450
www.uspto.gov

NOTICE OF ALLOWANCE AND FEE(S) DUE

023720 7590 02/03/2005

WILLIAMS, MORGAN & AMERSON, P.C.
10333 RICHMOND, SUITE 1100
HOUSTON, TX 77042

EXAMINER	
GANDHI, JAYPRAKASH N	
ART UNIT	PAPER NUMBER
2125	

DATE MAILED: 02/03/2005

APPLICATION NO.	FILING DATE	FIRST NAMED INVENTOR	ATTORNEY DOCKET NO.	CONFIRMATION NO.
10/135,145	04/30/2002	Gustavo Mata	2000.079600	5112

TITLE OF INVENTION: AGENT REACTIVE SCHEDULING IN AN AUTOMATED MANUFACTURING ENVIRONMENT

APPLN. TYPE	SMALL ENTITY	ISSUE FEE	PUBLICATION FEE	TOTAL FEE(S) DUE	DATE DUE
nonprovisional	NO	$1400	$300	$1700	05/03/2005

THE APPLICATION IDENTIFIED ABOVE HAS BEEN EXAMINED AND IS ALLOWED FOR ISSUANCE AS A PATENT. PROSECUTION ON THE MERITS IS CLOSED. THIS NOTICE OF ALLOWANCE IS NOT A GRANT OF PATENT RIGHTS. THIS APPLICATION IS SUBJECT TO WITHDRAWAL FROM ISSUE AT THE INITIATIVE OF THE OFFICE OR UPON PETITION BY THE APPLICANT. SEE 37 CFR 1.313 AND MPEP 1308.

THE ISSUE FEE AND PUBLICATION FEE (IF REQUIRED) MUST BE PAID WITHIN THREE MONTHS FROM THE MAILING DATE OF THIS NOTICE OR THIS APPLICATION SHALL BE REGARDED AS ABANDONED. THIS STATUTORY PERIOD CANNOT BE EXTENDED. SEE 35 U.S.C. 151. THE ISSUE FEE DUE INDICATED ABOVE REFLECTS A CREDIT FOR ANY PREVIOUSLY PAID ISSUE FEE APPLIED IN THIS APPLICATION. THE PTOL-85B (OR AN EQUIVALENT) MUST BE RETURNED WITHIN THIS PERIOD EVEN IF NO FEE IS DUE OR THE APPLICATION WILL BE REGARDED AS ABANDONED.

HOW TO REPLY TO THIS NOTICE:

I. Review the SMALL ENTITY status shown above.

If the SMALL ENTITY is shown as YES, verify your current SMALL ENTITY status:

A. If the status is the same, pay the TOTAL FEE(S) DUE shown above.

B. If the status above is to be removed, check box 5b on Part B - Fee(s) Transmittal and pay the PUBLICATION FEE (if required) and twice the amount of the ISSUE FEE shown above, or

If the SMALL ENTITY is shown as NO:

A. Pay TOTAL FEE(S) DUE shown above, or

B. If applicant claimed SMALL ENTITY status before, or is now claiming SMALL ENTITY status, check box 5a on Part B - Fee(s) Transmittal and pay the PUBLICATION FEE (if required) and 1/2 the ISSUE FEE shown above.

II. PART B - FEE(S) TRANSMITTAL should be completed and returned to the United States Patent and Trademark Office (USPTO) with your ISSUE FEE and PUBLICATION FEE (if required). Even if the fee(s) have already been paid, Part B - Fee(s) Transmittal should be completed and returned. If you are charging the fee(s) to your deposit account, section "4b" of Part B - Fee(s) Transmittal should be completed and an extra copy of the form should be submitted.

III. All communications regarding this application must give the application number. Please direct all communications prior to issuance to Mail Stop ISSUE FEE unless advised to the contrary.

IMPORTANT REMINDER: Utility patents issuing on applications filed on or after Dec. 12, 1980 may require payment of maintenance fees. It is patentee's responsibility to ensure timely payment of maintenance fees when due.

PTOL-85 (Rev. 12/04) Approved for use through 04/30/2007.

Petitioner STMICROELECTRONICS, INC.,
Ex. 1006, IPR2022-00681, Pg. 243

PART B - FEE(S) TRANSMITTAL

Complete and send this form, together with applicable fee(s), to: Mail **Mail Stop ISSUE FEE**
Commissioner for Patents
P.O. Box 1450
Alexandria, Virginia 22313-1450
or Fax (703) 746-4000

INSTRUCTIONS: This form should be used for transmitting the ISSUE FEE and PUBLICATION FEE (if required). Blocks 1 through 5 should be completed where appropriate. All further correspondence including the Patent, advance orders and notification of maintenance fees will be mailed to the current correspondence address as indicated unless corrected below or directed otherwise in Block 1, by (a) specifying a new correspondence address; and/or (b) indicating a separate "FEE ADDRESS" for maintenance fee notifications.

CURRENT CORRESPONDENCE ADDRESS (Note: Use Block 1 for any change of address)

023720 7590 02/03/2005

WILLIAMS, MORGAN & AMERSON, P.C.
10333 RICHMOND, SUITE 1100
HOUSTON, TX 77042

Note: A certificate of mailing can only be used for domestic mailings of the Fee(s) Transmittal. This certificate cannot be used for any other accompanying papers. Each additional paper, such as an assignment or formal drawing, must have its own certificate of mailing or transmission.

Certificate of Mailing or Transmission

I hereby certify that this Fee(s) Transmittal is being deposited with the United States Postal Service with sufficient postage for first class mail in an envelope addressed to the Mail Stop ISSUE FEE address above, or being facsimile transmitted to the USPTO (703) 746-4000, on the date indicated below.

(Depositor's name)

(Signature)

(Date)

APPLICATION NO.	FILING DATE	FIRST NAMED INVENTOR	ATTORNEY DOCKET NO.	CONFIRMATION NO.
10/135,145	04/30/2002	Gustavo Mata	2000.079600	5112

TITLE OF INVENTION: AGENT REACTIVE SCHEDULING IN AN AUTOMATED MANUFACTURING ENVIRONMENT

APPLN. TYPE	SMALL ENTITY	ISSUE FEE	PUBLICATION FEE	TOTAL FEE(S) DUE	DATE DUE
nonprovisional	NO	$1400	$300	$1700	05/03/2005

EXAMINER	ART UNIT	CLASS-SUBCLASS
GANDHI, JAYPRAKASH N	2125	700-099000

1. Change of correspondence address or indication of "Fee Address" (37 CFR 1.363).

☐ Change of correspondence address (or Change of Correspondence Address form PTO/SB/122) attached.

☐ "Fee Address" indication (or "Fee Address" Indication form PTO/SB/47; Rev 03-02 or more recent) attached. **Use of a Customer Number is required.**

2. For printing on the patent front page, list

(1) the names of up to 3 registered patent attorneys or agents OR, alternatively,

(2) the name of a single firm (having as a member a registered attorney or agent) and the names of up to 2 registered patent attorneys or agents. If no name is listed, no name will be printed.

1 _____

2 _____

3 _____

3. ASSIGNEE NAME AND RESIDENCE DATA TO BE PRINTED ON THE PATENT (print or type)

PLEASE NOTE: Unless an assignee is identified below, no assignee data will appear on the patent. If an assignee is identified below, the document has been filed for recordation as set forth in 37 CFR 3.11. Completion of this form is NOT a substitute for filing an assignment.

(A) NAME OF ASSIGNEE (B) RESIDENCE: (CITY and STATE OR COUNTRY)

Please check the appropriate assignee category or categories (will not be printed on the patent) : ☐ Individual ☐ Corporation or other private group entity ☐ Government

4a. The following fee(s) are enclosed:

☐ Issue Fee

☐ Publication Fee (No small entity discount permitted)

☐ Advance Order - # of Copies _____

4b. Payment of Fee(s):

☐ A check in the amount of the fee(s) is enclosed.

☐ Payment by credit card. Form PTO-2038 is attached.

☐ The Director is hereby authorized by charge the required fee(s), or credit any overpayment, to Deposit Account Number _____ (enclose an extra copy of this form).

5. **Change in Entity Status** (from status indicated above)

☐ a. Applicant claims SMALL ENTITY status. See 37 CFR 1.27.

☐ b. Applicant is no longer claiming SMALL ENTITY status. See 37 CFR 1.27(g)(2).

The Director of the USPTO is requested to apply the Issue Fee and Publication Fee (if any) or to re-apply any previously paid issue fee to the application identified above.
NOTE: The Issue Fee and Publication Fee (if required) will not be accepted from anyone other than the applicant; a registered attorney or agent; or the assignee or other party in interest as shown by the records of the United States Patent and Trademark Office.

Authorized Signature _____ Date _____

Typed or printed name _____ Registration No. _____

This collection of information is required by 37 CFR 1.311. The information is required to obtain or retain a benefit by the public which is to file (and by the USPTO to process) an application. Confidentiality is governed by 35 U.S.C. 122 and 37 CFR 1.14. This collection is estimated to take 12 minutes to complete, including gathering, preparing, and submitting the completed application form to the USPTO. Time will vary depending upon the individual case. Any comments on the amount of time you require to complete this form and/or suggestions for reducing this burden, should be sent to the Chief Information Officer, U.S. Patent and Trademark Office, U.S. Department of Commerce, P.O. Box 1450, Alexandria, Virginia 22313-1450. DO NOT SEND FEES OR COMPLETED FORMS TO THIS ADDRESS. SEND TO: Commissioner for Patents, P.O. Box 1450, Alexandria, Virginia 22313-1450.

Under the Paperwork Reduction Act of 1995, no persons are required to respond to a collection of information unless it displays a valid OMB control number.

Petitioner STMICROELECTRONICS, INC.,
Ex. 1006, IPR2022-00681, Pg. 244

UNITED STATES PATENT AND TRADEMARK OFFICE

UNITED STATES DEPARTMENT OF COMMERCE
United States Patent and Trademark Office
Address: COMMISSIONER FOR PATENTS
P.O. Box 1450
Alexandria, Virginia 22313-1450
www.uspto.gov

APPLICATION NO.	FILING DATE	FIRST NAMED INVENTOR	ATTORNEY DOCKET NO.	CONFIRMATION NO.
10/135,145	04/30/2002	Gustavo Mata	2000.079600	5112

023720 7590 02/03/2005

WILLIAMS, MORGAN & AMERSON, P.C.
10333 RICHMOND, SUITE 1100
HOUSTON, TX 77042

EXAMINER	
GANDHI, JAYPRAKASH N	
ART UNIT	PAPER NUMBER
2125	

DATE MAILED: 02/03/2005

Determination of Patent Term Adjustment under 35 U.S.C. 154 (b)
(application filed on or after May 29, 2000)

The Patent Term Adjustment to date is 0 day(s). If the issue fee is paid on the date that is three months after the mailing date of this notice and the patent issues on the Tuesday before the date that is 28 weeks (six and a half months) after the mailing date of this notice, the Patent Term Adjustment will be 0 day(s).

If a Continued Prosecution Application (CPA) was filed in the above-identified application, the filing date that determines Patent Term Adjustment is the filing date of the most recent CPA.

Applicant will be able to obtain more detailed information by accessing the Patent Application Information Retrieval (PAIR) WEB site (http://pair.uspto.gov).

Any questions regarding the Patent Term Extension or Adjustment determination should be directed to the Office of Patent Legal Administration at (571) 272-7702. Questions relating to issue and publication fee payments should be directed to the Customer Service Center of the Office of Patent Publication at (703) 305-8283.

PTOL-85 (Rev. 12/04) Approved for use through 04/30/2007.

Petitioner STMICROELECTRONICS, INC.,
Ex. 1006, IPR2022-00681, Pg. 245

Notice of Allowability	Application No.	Applicant(s)	
	10/135,145	MATA ET AL.	
	Examiner	Art Unit	
	Jayprakash N Gandhi	2125	

-- The MAILING DATE of this communication app ars on th cover sheet with the correspondence address--

All claims being allowable, PROSECUTION ON THE MERITS IS (OR REMAINS) CLOSED in this application. If not included herewith (or previously mailed), a Notice of Allowance (PTOL-85) or other appropriate communication will be mailed in due course. **THIS NOTICE OF ALLOWABILITY IS NOT A GRANT OF PATENT RIGHTS.** This application is subject to withdrawal from issue at the initiative of the Office or upon petition by the applicant. See 37 CFR 1.313 and MPEP 1308.

1. ☒ This communication is responsive to *11/24/04*.

2. ☒ The allowed claim(s) is/are *1-53*.

3. ☒ The drawings filed on *04/30/02* are accepted by the Examiner.

4. ☐ Acknowledgment is made of a claim for foreign priority under 35 U.S.C. § 119(a)-(d) or (f).
   a) ☐ All b) ☐ Some* c) ☐ None of the:
      1. ☐ Certified copies of the priority documents have been received.
      2. ☐ Certified copies of the priority documents have been received in Application No. _____ .
      3. ☐ Copies of the certified copies of the priority documents have been received in this national stage application from th International Bureau (PCT Rule 17.2(a)).

   * Certified copies not received: _____.

Applicant has THREE MONTHS FROM THE "MAILING DATE" of this communication to file a reply complying with the requirements noted below. Failure to timely comply will result in ABANDONMENT of this application.
THIS THREE-MONTH PERIOD IS NOT EXTENDABLE.

5. ☐ A SUBSTITUTE OATH OR DECLARATION must be submitted. Note the attached EXAMINER'S AMENDMENT or NOTICE OF INFORMAL PATENT APPLICATION (PTO-152) which gives reason(s) why the oath or declaration is deficient.

6. ☐ CORRECTED DRAWINGS (as "replacement sheets") must be submitted.
   (a) ☐ including changes required by the Notice of Draftsperson's Patent Drawing Review (PTO-948) attached
      1) ☐ hereto or 2) ☐ to Paper No./Mail Date _____.
   (b) ☐ including changes required by the attached Examiner's Amendment / Comment or in the Office action of Paper No./Mail Date _____.

Identifying indicia such as the application number (see 37 CFR 1.84(c)) should be written on the drawings in the front (not the back) of each sheet. Replacement sheet(s) should be labeled as such in the header according to 37 CFR 1.121(d).

7. ☐ DEPOSIT OF and/or INFORMATION about the deposit of BIOLOGICAL MATERIAL must be submitted. Note the attached Examiner's comment regarding REQUIREMENT FOR THE DEPOSIT OF BIOLOGICAL MATERIAL.

Attachm nt(s)

1. ☐ Notice of References Cited (PTO-892)
2. ☐ Notice of Draftperson's Patent Drawing Review (PTO-948)
3. ☐ Information Disclosure Statements (PTO-1449 or PTO/SB/08), Paper No./Mail Date _____
4. ☐ Examiner's Comment Regarding Requirement for Deposit of Biological Material
5. ☐ Notice of Informal Patent Application (PTO-152)
6. ☐ Interview Summary (PTO-413), Paper No./Mail Date _____.
7. ☐ Examiner's Amendment/Comment
8. ☐ Examiner's Statement of Reasons for Allowance
9. ☐ Other _____.

JNGandhi

Jayprakash N Gandhi
Primary Examiner
Art Unit: 2125

Petitioner STMICROELECTRONICS, INC.,
Ex. 1006, IPR2022-00681, Pg. 246

UNITED STATES PATENT AND TRADEMARK OFFICE

UNITED STATES DEPARTMENT OF COMMERCE
United States Patent and Trademark Office
Address: COMMISSIONER FOR PATENTS
P.O. Box 1450
Alexandria, Virginia 22313-1450
www.uspto.gov

BIBDATASHEET

Bib Data Sheet

CONFIRMATION NO. 51

SERIAL NUMBER	FILING DATE	CLASS	GROUP ART UNIT	ATTORNEY DOCKE NO.
10/135,145	04/30/2002 RULE	700	2125	2000.079600

APPLICANTS

Gustavo Mata, Austin, TX;

Steven C. Nettles, Johnson City, TX;
Larry D. Barto, Austin, TX;Yiwei Li, Austin, TX;

** CONTINUING DATA **********

** FOREIGN APPLICATIONS **********

IF REQUIRED, FOREIGN FILING LICENSE GRANTED
** 05/17/2002

Foreign Priority claimed ☐ yes ☒ no 35 USC 119 (a-d) conditions met ☐ yes ☐ no ☐ Met after Allowance Verified and Acknowledged _____ Examiner's Signature _____ Initials	STATE OR COUNTRY TX	SHEETS DRAWING 6	TOTAL CLAIMS 53	INDEPENDE CLAIMS 6

ADDRESS
023720
WILLIAMS, MORGAN & AMERSON, P.C.
10333 RICHMOND, SUITE 1100
HOUSTON , TX
77042

TITLE
Agent reactive scheduling in an automated manufacturing environment

FILING FEE RECEIVED 1586	FEES: Authority has been given in Paper No. _____ to charge/credit DEPOSIT ACCOUNT No. _____ for following:	☐ All Fees ☐ 1.16 Fees (Filing) ☐ 1.17 Fees (Processing Ext. of time ☐ 1.18 Fees (Issue) ☐ Other _____ ☐ Credit

Issue Classification	Application No.	Applicant(s)	
	10/135,145	MATA ET AL.	
	Examiner	Art Unit	
	Jayprakash N Gandhi	2125	

ISSUE CLASSIFICATION

ORIGINAL		CROSS REFERENCE(S)							
CLASS	SUBCLASS	CLASS	SUBCLASS (ONE SUBCLASS PER BLOCK)						
700	99	700	100	121					
INTERNATIONAL CLASSIFICATION		705	8						
G 0 6 F	19/00								
	/								
	/								
	/								
	/								

(Assistant Examiner) (Date)

2/2/05
(Legal Instruments Examiner) (Date)

Jayprakash N. Gandhi
Primary Examiner 2100
Technology Center 2000
(Primary Examiner) (Date)
JNGandhi 2/1/05

Total Claims Allowed: 53

O.G. Print Claim(s)	O.G. Print Fig.
1	2

☒ Claims renumbered in the same order as presented by applicant ☐ CPA ☐ T.D. ☐ R.1.47

Final	Original	Final	Original	Final	Original	Final	Original	Final	Original	Final	Original	Final	Original
	1		31		61		91		121		151		181
	2		32		62		92		122		152		182
	3		33		63		93		123		153		183
	4		34		64		94		124		154		184
	5		35		65		95		125		155		185
	6		36		66		96		126		156		186
	7		37		67		97		127		157		187
	8		38		68		98		128		158		188
	9		39		69		99		129		159		189
	10		40		70		100		130		160		190
	11		41		71		101		131		161		191
	12		42		72		102		132		162		192
	13		43		73		103		133		163		193
	14		44		74		104		134		164		194
	15		45		75		105		135		165		195
	16		46		76		106		136		166		196
	17		47		77		107		137		167		197
	18		48		78		108		138		168		198
	19		49		79		109		139		169		199
	20		50		80		110		140		170		200
	21		51		81		111		141		171		201
	22		52		82		112		142		172		202
	23		53		83		113		143		173		203
	24		54		84		114		144		174		204
	25		55		85		115		145		175		205
	26		56		86		116		146		176		206
	27		57		87		117		147		177		207
	28		58		88		118		148		178		208
	29		59		89		119		149		179		209
	30		60		90		120		150		180		210

Petitioner STMICROELECTRONICS, INC.,
Ex. 1006, IPR2022-00681, Pg. 248

Search Notes

Application No.	Applicant(s)	
10/135,145	MATA ET AL.	
Examiner	**Art Unit**	
Jayprakash N Gandhi	2125	

SEARCHED			
Class	Subclass	Date	Examiner
705	8	2/1/2005	JNG

INTERFERENCE SEARCHED			
Class	Subclass	Date	Examiner
700	**99-121**	2/1/2005	**JNG**
705	8	2/1/2005	JNG

SEARCH NOTES (INCLUDING SEARCH STRATEGY)		
	DATE	EXMR

Petitioner STMICROELECTRONICS, INC.,
Ex. 1006, IPR2022-00681, Pg. 249

PART B - FEE(S) TRANSMITTAL

Complete and send this form, together with applicable Fee(s), to:

Mail Stop ISSUE FEE
Commissioner for Patents
P.O. Box 1450
Alexandria, Virginia 22313-1450
or Fax (703) 746-4000

INSTRUCTIONS: This form should be used for transmitting the ISSUE FEE and PUBLICATION FEE (if required). Blocks I through 4 should be completed where appropriate. All further correspondence including the Patent, advance orders and notification of maintenance fees will be mailed to the current correspondence address as indicated unless corrected below or directed otherwise in Block I, by (a) specifying a new correspondence address; and/or (b) indicating a separate "FEE ADDRESS" for maintenance fee notifications.

CURRENT CORRESPONDENCE ADDRESS (Note: Legibly mark-up with any corrections or use Block I)

7590 09/10/04

WILLIAMS, MORGAN & AMERSON, P.C.
10333 RICHMOND, SUITE 1100
HOUSTON, TX 77042

03/22/2005 ZJUHAR2 00000075 500786 10135145

01 FC:1501 1400.00 DA
02 FC:1504 300.00 DA
03 FC:8001 3.00 DA

OIPE JC1560 MAR 2 1 2005 PATENT & TRADEMARK OFFICE

Note: A certificate of mailing can only be used for domestic mailings of the Fee(s) Transmittal. This certificate cannot be used for any other accompanying papers. Each additional paper, such as an assignment or formal drawing, must have its own certificate of mailing or transmission.

Certificate of Mailing or Transmission

I hereby certify that this Fee(s) Transmittal is being deposited with the United States Postal Service with sufficient postage for first class mail in an envelope addressed to the Mail Stop ISSUE FEE address above, or being facsimile transmitted to the USPTO, on the date indicated below.

(Depositor's Name) Suzanne Stephens

(Signature) Suzanne Stephens

(Date) March 16, 2005

APPLICATION NO.	FILING DATE	FIRST NAMED INVENTOR	ATTORNEY DOCKET NO.	CONFIRMATION NO.
10/135,145	4/30/02	Gustavo Mata	2000.079600	5112

APPLN. TYPE	SMALL ENTITY	ISSUE FEE	PUBLICATION FEE	TOTAL FEE(S) DUE	DATE DUE
Nonprovisional	No	$1400	$300	$1700	5/3/05

TITLE OF INVENTION: PENETRATOR AND METHOD FOR USING SAME

EXAMINER	ART UNIT	CLASS-SUBCLASS
GANDHI, JAYPRAKASH N.	2125	700-099000

1. Change of correspondence address or indication of "Fee Address" (37 CFR 1.363).
☐ Change of correspondence address (or Change of Correspondence Address form PTO/SB/(22) attached.
☐ "Fee Address" indication (or "Fee Address" Indication form PTO/SB/47; Rev 03-02 or more recent) attached. **Use of a Customer Number is required.**

2. For printing on the patent front page, list (1) the names of up to 3 registered patent attorneys or agents OR, alternatively, (2) the name of a single firm (having as a member a registered attorney or agent) and the names of up to 2 registered patent attorneys or agents. If no name is listed, no name will be printed.

1. Williams, Morgan &
2. Amerson, P.C.
3.

3. ASSIGNEE NAME AND RESIDENCE DATA TO BE PRINTED ON THE PATENT (print or type)

PLEASE NOTE: Unless an assignee is identified below, no assignee data will appear on the patent. Inclusion of assignee data is only appropriate when an assignment has been previously submitted to the USPTO or is being submitted under separate cover. Completion of this form is NOT a substitute for filing an assignment.

(A) NAME OF ASSIGNEE (B) RESIDENCE: (CITY and STATE OR COUNTRY)

ADVANCED MICRO DEVICES, INC. AUSTIN, TEXAS

Please check the appropriate assignee category or categories (will not be printed on the patent); ☐ individual ☒ corporation or other private group entity ☐ government

4a. The following fee(s) are enclosed:
☒ Issue Fee
☒ Publication Fee
☒ Advance Order - # of Copies 1

4b. Payment of Fee(s):
☒ A check in the amount of the fee(s) is enclosed.
☐ Payment by credit card. Form PTO-2038 is attached.
☒ The Director is hereby authorized to charge the required fee(s), or credit any overpayment, to Deposit Account Number: ***50-0786/2000.079600*** (enclose an extra copy of this form).

5. Change in Entity Status(from status indicated above)
☐ a. Applicant claims SMALL ENTITY status. See 37 35 CFR 1.27. ☐ b. Applicant is no longer claims SMALL ENTITY status. See 37 CFR 1.27(g)(2).

Director of the USPTO is requested to apply the Issue Fee and Publication Fee (if any) or to re-apply any previously paid issue fee to the application identified above.
NOTE; The Issue Fee and Publication Fee (if required) will not be accepted from anyone other than the applicant; a registered attorney or agent; or the assignee or other party in interest as shown by the records of the United States Patent and Trademark Office.

Authorized Signature _____ Date March 16, 2005

Typed or printed name Jeffrey A. Pyle Registration No. 34,904

This collection of information is required by 37 CFR 1.311. The information is required to obtain or retain a benefit by the public which is to file (and by the USPTO to process) an application. Confidentiality IS governed by 35 U.S.c. 122 and 37 CFR 1.14. This collection is estimated to take 12 minutes to complete, including gathering, preparing, and submitting the completed application form to the USPTO. Time will vary depending upon the individual case. Any comments on the amount of time you require to complete this form and/or suggestions for reducing this burden, should be sent to the Chief Information Officer, U.S. Patent and Trademark Office, U.S. Department of Commerce, Alexandria, Virginia 22313-1450. DO NOT SEND FEES OR COMPLETED FORMS TO THIS ADDRESS.
SEND TO: Commissioner for Patents, Alexandria, Virginia 22313-1450.

Under the Paperwork Reduction Act of 1995, no persons are required to respond to a collection of information unless it displays a valid OMB control number.

Petitioner STMICROELECTRONICS, INC.,
Ex. 1006, IPR2022-00681, Pg. 250

OIPE
MAR 21 2005
PATENT & TRADEMARK OFFICE

WILLIAMS, MORGAN & AMERSON, P.C.
10333 RICHMOND, STE. 1100, HOUSTON, TEXAS 77042
(713) 934-7000 FAX: (713) 934-7011

Danny L. Williams
Terry D. Morgan
J. Mike Amerson
Kenneth D. Goodman
Jeffrey A. Pyle
Jaison C. John
Ruben S. Bains

Shelley P.M. Fussey, Ph.D.*
Mark D. Moore, Ph.D.*
Raymund F. Eich, Ph.D.*
Daren C. Davis*
Mark W. Sincell, Ph.D.*

*Patent Agent

WRITER'S DIRECT DIAL:
(713) 934-4053

March 16, 2005

FILE: 2063.003496/VS-00504

CERTIFICATE OF MAILING UNDER 37 C.F.R. § 1.8	
DATE OF DEPOSIT:	March 16, 2005

I hereby certify that this paper or fee is being deposited with the United States Postal Service with sufficient postage as "FIRST CLASS MAIL" addressed to: MS Issue Fee; Commissioner for Patents, P.O. Box 1450, Alexandria, VA 22313-1450.

Suzanne Stephens

MS Issue Fee
Commissioner for Patents
P.O. Box 1450
Alexandria, VA 22313-1450

RE: *U.S. Patent Application Serial No. 10/135,145*
Entitled: "AGENT REACTIVE SCHEDULING IN AN AUTOMATED MANUFACTURING ENVIRONMENT"
Inventor(s): GUSTAVO MATA ET AL.
Client Reference: TT4739

Sir:

In response to the Notice of Allowance and Issue Fee Due mailed February 3, 2005, transmitted herewith for filing is:

(1) Issue Fee Transmittal form

All correspondence, notices, official letters and other communications should be directed to Jeffrey A. Pyle, Williams, Morgan & Amerson, P.C., 10333 Richmond, Suite 1100, Houston, TX 77042, and telephone number (713) 934-4053.

The Assistant Commissioner is authorized to deduct the amount of the total fee of $1,700 from Advanced Micro Devices, Inc. Deposit Account No. 01-0365/TT4739. In the event the monies in that account are insufficient, the Commissioner is authorized to withdraw funds from Williams, Morgan & Amerson, P.C. Deposit Account No. 50-0786/2000.079600/JAP.

Please date stamp the enclosed postcard and return it to evidence receipt of these materials.

Respectfully submitted,

WILLIAMS, MORGAN & AMERSON, P.C.
CUSTOMER NO. 23720

Date: March 16, 2005

By: _____

Jeffrey A. Pyle, Reg. No. 34,904
10333 Richmond, Suite 1100
Houston, Texas 77042
(713) 934-4053 ph
(713) 934-7011 fx
ATTORNEY FOR APPLICANT(S)

AO 120 (Rev. 08/10)

TO:	REPORT ON THE FILING OR DETERMINATION OF AN ACTION REGARDING A PATENT OR TRADEMARK
Mail Stop 8 Director of the U.S. Patent and Trademark Office P.O. Box 1450 Alexandria, VA 22313-1450	

In Compliance with 35 U.S.C. § 290 and/or 15 U.S.C. § 1116 you are hereby advised that a court action has been filed in the U.S. District Court for the Western District of Texas on the following

☐ Trademarks or ☑ Patents. (☐ the patent action involves 35 U.S.C. § 292.):

DOCKET NO.	DATE FILED	U.S. DISTRICT COURT
6:20-cv-1212	12/31/2020	for the Western District of Texas

PLAINTIFF	DEFENDANT
Ocean Semiconductor LLC	NXP Semiconductors N.V., NXP B.V. and NXP USA, Inc.

	PATENT OR TRADEMARK NO.	DATE OF PATENT OR TRADEMARK	HOLDER OF PATENT OR TRADEMARK
1	See attachment		See attachment
2			
3			
4			
5			

In the above—entitled case, the following patent(s)/ trademark(s) have been included:

DATE INCLUDED	INCLUDED BY ☐ Amendment ☐ Answer ☐ Cross Bill ☐ Other Pleading	
PATENT OR TRADEMARK NO.	DATE OF PATENT OR TRADEMARK	HOLDER OF PATENT OR TRADEMARK
1		
2		
3		
4		
5		

In the above—entitled case, the following decision has been rendered or judgement issued:

DECISION/JUDGEMENT

CLERK	(BY) DEPUTY CLERK	DATE

Copy 1—Upon initiation of action, mail this copy to Director **Copy 3—Upon termination of action, mail this copy to Director**
Copy 2—Upon filing document adding patent(s), mail this copy to Director **Copy 4—Case file copy**

Patent or Trademark No.	**Date of Patent or Trademark**	**Holder of Patent or Trademark**
US 6,660,651 B1	December 9, 2003	Advanced Micro Devices, Inc.
US 6,907,305 B2	June 14, 2005	Advanced Micro Devices, Inc.
US 6,725,402 B1	April 20, 2004	Advanced Micro Devices, Inc.
US 6,968,248 B1	November 22, 2005	Advanced Micro Devices, Inc.
US 6,420,097 B1	July 16, 2002	Advanced Micro Devices, Inc.
US 7,080,330 B1	July 18, 2006	Advanced Micro Devices, Inc.
US 6,836,691 B1	December 28, 2004	Advanced Micro Devices, Inc.
US 8,676,538 B2	March 18, 2004	Advanced Micro Devices, Inc.

AO 120 (Rev. 08/10)

TO:	REPORT ON THE FILING OR DETERMINATION OF AN ACTION REGARDING A PATENT OR TRADEMARK
Mail Stop 8 Director of the U.S. Patent and Trademark Office P.O. Box 1450 Alexandria, VA 22313-1450	

In Compliance with 35 U.S.C. § 290 and/or 15 U.S.C. § 1116 you are hereby advised that a court action has been filed in the U.S. District Court for the Western District of Texas on the following

☐ Trademarks or ☑ Patents. (☐ the patent action involves 35 U.S.C. § 292.):

DOCKET NO.	DATE FILED	U.S. DISTRICT COURT
6:20-cv-1212	12/31/2020	for the Western District of Texas

PLAINTIFF	DEFENDANT
Ocean Semiconductor LLC	NXP Semiconductors N.V., NXP B.V. and NXP USA, Inc.

	PATENT OR TRADEMARK NO.	DATE OF PATENT OR TRADEMARK	HOLDER OF PATENT OR TRADEMARK
1	See attachment		See attachment
2			
3			
4			
5			

In the above—entitled case, the following patent(s)/ trademark(s) have been included:

DATE INCLUDED	INCLUDED BY ☐ Amendment ☐ Answer ☐ Cross Bill ☐ Other Pleading	
PATENT OR TRADEMARK NO.	DATE OF PATENT OR TRADEMARK	HOLDER OF PATENT OR TRADEMARK
1		
2		
3		
4		
5		

In the above—entitled case, the following decision has been rendered or judgement issued:

DECISION/JUDGEMENT

CLERK	(BY) DEPUTY CLERK	DATE

Copy 1—Upon initiation of action, mail this copy to Director **Copy 3—Upon termination of action, mail this copy to Director**
Copy 2—Upon filing document adding patent(s), mail this copy to Director **Copy 4—Case file copy**

Patent or Trademark No.	**Date of Patent or Trademark**	**Holder of Patent or Trademark**
US 6,660,651 B1	December 9, 2003	Advanced Micro Devices, Inc.
US 6,907,305 B2	June 14, 2005	Advanced Micro Devices, Inc.
US 6,725,402 B1	April 20, 2004	Advanced Micro Devices, Inc.
US 6,968,248 B1	November 22, 2005	Advanced Micro Devices, Inc.
US 6,420,097 B1	July 16, 2002	Advanced Micro Devices, Inc.
US 7,080,330 B1	July 18, 2006	Advanced Micro Devices, Inc.
US 6,836,691 B1	December 28, 2004	Advanced Micro Devices, Inc.
US 8,676,538 B2	March 18, 2004	Advanced Micro Devices, Inc.

AO 120 (Rev. 08/10)

TO:	REPORT ON THE FILING OR DETERMINATION OF AN ACTION REGARDING A PATENT OR TRADEMARK
Mail Stop 8 Director of the U.S. Patent and Trademark Office P.O. Box 1450 Alexandria, VA 22313-1450	

In Compliance with 35 U.S.C. § 290 and/or 15 U.S.C. § 1116 you are hereby advised that a court action has been filed in the U.S. District Court for the Western District of Texas on the following

☐ Trademarks or ☑ Patents. (☐ the patent action involves 35 U.S.C. § 292.):

DOCKET NO.	DATE FILED	U.S. DISTRICT COURT
6:20-cv-01210	12/31/2020	for the Western District of Texas

PLAINTIFF	DEFENDANT
Ocean Semiconductor LLC	MediaTek Inc. and MediaTek USA Inc.

	PATENT OR TRADEMARK NO.	DATE OF PATENT OR TRADEMARK	HOLDER OF PATENT OR TRADEMARK
1	See attachment		See attachment
2			
3			
4			
5			

In the above—entitled case, the following patent(s)/ trademark(s) have been included:

DATE INCLUDED	INCLUDED BY ☐ Amendment ☐ Answer ☐ Cross Bill ☐ Other Pleading	
PATENT OR TRADEMARK NO.	DATE OF PATENT OR TRADEMARK	HOLDER OF PATENT OR TRADEMARK
1		
2		
3		
4		
5		

In the above—entitled case, the following decision has been rendered or judgement issued:

DECISION/JUDGEMENT

CLERK	(BY) DEPUTY CLERK	DATE

Copy 1—Upon initiation of action, mail this copy to Director Copy 3—Upon termination of action, mail this copy to Director
Copy 2—Upon filing document adding patent(s), mail this copy to Director Copy 4—Case file copy

Patent or Trademark No.	**Date of Patent or Trademark**	**Holder of Patent or Trademark**
US 6,660,651 B1	December 9, 2003	Advanced Micro Devices, Inc.
US 6,907,305 B2	June 14, 2005	Advanced Micro Devices, Inc.
US 6,725,402 B1	April 20, 2004	Advanced Micro Devices, Inc.
US 6,968,248 B1	November 22, 2005	Advanced Micro Devices, Inc.
US 7,080,330 B1	July 18, 2006	Advanced Micro Devices, Inc.
US 6,836,691 B1	December 28, 2004	Advanced Micro Devices, Inc.
US 8,676,538 B2	March 18, 2004	Advanced Micro Devices, Inc.

AO 120 (Rev. 08/10)

TO:	REPORT ON THE FILING OR DETERMINATION OF AN ACTION REGARDING A PATENT OR TRADEMARK
Mail Stop 8 Director of the U.S. Patent and Trademark Office P.O. Box 1450 Alexandria, VA 22313-1450	

In Compliance with 35 U.S.C. § 290 and/or 15 U.S.C. § 1116 you are hereby advised that a court action has been filed in the U.S. District Court for the Western District of Texas on the following

☐ Trademarks or ☑ Patents. (☐ the patent action involves 35 U.S.C. § 292.):

DOCKET NO.	DATE FILED	U.S. DISTRICT COURT
6:20-cv-1211	12/31/2020	for the Western District of Texas

PLAINTIFF	DEFENDANT
Ocean Semiconductor LLC	NVIDIA Corporation

	PATENT OR TRADEMARK NO.	DATE OF PATENT OR TRADEMARK	HOLDER OF PATENT OR TRADEMARK
1	See attachment		See attachment
2			
3			
4			
5			

In the above—entitled case, the following patent(s)/ trademark(s) have been included:

DATE INCLUDED	INCLUDED BY ☐ Amendment ☐ Answer ☐ Cross Bill ☐ Other Pleading	
PATENT OR TRADEMARK NO.	DATE OF PATENT OR TRADEMARK	HOLDER OF PATENT OR TRADEMARK
1		
2		
3		
4		
5		

In the above—entitled case, the following decision has been rendered or judgement issued:

DECISION/JUDGEMENT

CLERK	(BY) DEPUTY CLERK	DATE

Copy 1—Upon initiation of action, mail this copy to Director **Copy 3—Upon termination of action, mail this copy to Director**
Copy 2—Upon filing document adding patent(s), mail this copy to Director **Copy 4—Case file copy**

Patent or Trademark No.	**Date of Patent or Trademark**	**Holder of Patent or Trademark**
US 6,660,651 B1	December 9, 2003	Advanced Micro Devices, Inc.
US 6,907,305 B2	June 14, 2005	Advanced Micro Devices, Inc.
US 6,725,402 B1	April 20, 2004	Advanced Micro Devices, Inc.
US 6,968,248 B1	November 22, 2005	Advanced Micro Devices, Inc.
US 7,080,330 B1	July 18, 2006	Advanced Micro Devices, Inc.
US 6,836,691 B1	December 28, 2004	Advanced Micro Devices, Inc.
US 8,676,538 B2	March 18, 2004	Advanced Micro Devices, Inc.

AO 120 (Rev. 08/10)

TO:	REPORT ON THE FILING OR DETERMINATION OF AN ACTION REGARDING A PATENT OR TRADEMARK
Mail Stop 8 Director of the U.S. Patent and Trademark Office P.O. Box 1450 Alexandria, VA 22313-1450	

In Compliance with 35 U.S.C. § 290 and/or 15 U.S.C. § 1116 you are hereby advised that a court action has been filed in the U.S. District Court for the Western District of Texas on the following

☐ Trademarks or ☑ Patents. (☐ the patent action involves 35 U.S.C. § 292.):

DOCKET NO.	DATE FILED	U.S. DISTRICT COURT
6:20-cv-1213	12/31/2020	for the Western District of Texas

PLAINTIFF	DEFENDANT
Ocean Semiconductor LLC	Renesas Electronics Corporation and Renesas Electronics America, Inc.

	PATENT OR TRADEMARK NO.	DATE OF PATENT OR TRADEMARK	HOLDER OF PATENT OR TRADEMARK
1	See attachment		See attachment
2			
3			
4			
5			

In the above—entitled case, the following patent(s)/ trademark(s) have been included:

DATE INCLUDED	INCLUDED BY ☐ Amendment ☐ Answer ☐ Cross Bill ☐ Other Pleading	
PATENT OR TRADEMARK NO.	DATE OF PATENT OR TRADEMARK	HOLDER OF PATENT OR TRADEMARK
1		
2		
3		
4		
5		

In the above—entitled case, the following decision has been rendered or judgement issued:

DECISION/JUDGEMENT

CLERK	(BY) DEPUTY CLERK	DATE

Copy 1—Upon initiation of action, mail this copy to Director **Copy 3—Upon termination of action, mail this copy to Director**
Copy 2—Upon filing document adding patent(s), mail this copy to Director **Copy 4—Case file copy**

Patent or Trademark No.	**Date of Patent or Trademark**	**Holder of Patent or Trademark**
US 6,660,651 B1	December 9, 2003	Advanced Micro Devices, Inc.
US 6,907,305 B2	June 14, 2005	Advanced Micro Devices, Inc.
US 6,725,402 B1	April 20, 2004	Advanced Micro Devices, Inc.
US 6,968,248 B1	November 22, 2005	Advanced Micro Devices, Inc.
US 7,080,330 B1	July 18, 2006	Advanced Micro Devices, Inc.
US 6,836,691 B1	December 28, 2004	Advanced Micro Devices, Inc.
US 8,676,538 B2	March 18, 2004	Advanced Micro Devices, Inc.

AO 120 (Rev. 08/10)

TO:	REPORT ON THE FILING OR DETERMINATION OF AN ACTION REGARDING A PATENT OR TRADEMARK
Mail Stop 8 Director of the U.S. Patent and Trademark Office P.O. Box 1450 Alexandria, VA 22313-1450	

In Compliance with 35 U.S.C. § 290 and/or 15 U.S.C. § 1116 you are hereby advised that a court action has been filed in the U.S. District Court for the Western District of Texas on the following

☐ Trademarks or ☑ Patents. (☐ the patent action involves 35 U.S.C. § 292.):

DOCKET NO.	DATE FILED	U.S. DISTRICT COURT
6:20-cv-1215	12/31/2020	for the Western District of Texas

PLAINTIFF	DEFENDANT
Ocean Semiconductor LLC	STMicroeletronics, Inc.

	PATENT OR TRADEMARK NO.	DATE OF PATENT OR TRADEMARK	HOLDER OF PATENT OR TRADEMARK
1	See attachment		See attachment
2			
3			
4			
5			

In the above—entitled case, the following patent(s)/ trademark(s) have been included:

DATE INCLUDED	INCLUDED BY ☐ Amendment ☐ Answer ☐ Cross Bill ☐ Other Pleading	
PATENT OR TRADEMARK NO.	DATE OF PATENT OR TRADEMARK	HOLDER OF PATENT OR TRADEMARK
1		
2		
3		
4		
5		

In the above—entitled case, the following decision has been rendered or judgement issued:

DECISION/JUDGEMENT

CLERK	(BY) DEPUTY CLERK	DATE

Copy 1—Upon initiation of action, mail this copy to Director **Copy 3—Upon termination of action, mail this copy to Director**
Copy 2—Upon filing document adding patent(s), mail this copy to Director **Copy 4—Case file copy**

Patent or Trademark No.	**Date of Patent or Trademark**	**Holder of Patent or Trademark**
US 6,660,651 B1	December 9, 2003	Advanced Micro Devices, Inc.
US 6,907,305 B2	June 14, 2005	Advanced Micro Devices, Inc.
US 6,725,402 B1	April 20, 2004	Advanced Micro Devices, Inc.
US 6,968,248 B1	November 22, 2005	Advanced Micro Devices, Inc.
US 6,420,097 B1	July 16, 2002	Advanced Micro Devices, Inc.
US 7,080,330 B1	July 18, 2006	Advanced Micro Devices, Inc.
US 6,836,691 B1	December 28, 2004	Advanced Micro Devices, Inc.
US 8,676,538 B2	March 18, 2004	Advanced Micro Devices, Inc.

AO 120 (Rev. 08/10)

TO:	REPORT ON THE FILING OR DETERMINATION OF AN ACTION REGARDING A PATENT OR TRADEMARK
Mail Stop 8 Director of the U.S. Patent and Trademark Office P.O. Box 1450 Alexandria, VA 22313-1450	

In Compliance with 35 U.S.C. § 290 and/or 15 U.S.C. § 1116 you are hereby advised that a court action has been filed in the U.S. District Court for the Western District of Texas on the following

☐ Trademarks or ☑ Patents. (☐ the patent action involves 35 U.S.C. § 292.):

DOCKET NO.	DATE FILED	U.S. DISTRICT COURT
6:20-cv-1216	12/31/2020	for the Western District of Texas

PLAINTIFF	DEFENDANT
Ocean Semiconductor LLC	Western Digital Technologies, Inc.

	PATENT OR TRADEMARK NO.	DATE OF PATENT OR TRADEMARK	HOLDER OF PATENT OR TRADEMARK
1	See attachment		See attachment
2			
3			
4			
5			

In the above—entitled case, the following patent(s)/ trademark(s) have been included:

DATE INCLUDED	INCLUDED BY ☐ Amendment ☐ Answer ☐ Cross Bill ☐ Other Pleading	
PATENT OR TRADEMARK NO.	DATE OF PATENT OR TRADEMARK	HOLDER OF PATENT OR TRADEMARK
1		
2		
3		
4		
5		

In the above—entitled case, the following decision has been rendered or judgement issued:

DECISION/JUDGEMENT

CLERK	(BY) DEPUTY CLERK	DATE

Copy 1—Upon initiation of action, mail this copy to Director **Copy 3—Upon termination of action, mail this copy to Director**
Copy 2—Upon filing document adding patent(s), mail this copy to Director **Copy 4—Case file copy**

Patent or Trademark No.	**Date of Patent or Trademark**	**Holder of Patent or Trademark**
US 6,660,651 B1	December 9, 2003	Advanced Micro Devices, Inc.
US 6,907,305 B2	June 14, 2005	Advanced Micro Devices, Inc.
US 6,725,402 B1	April 20, 2004	Advanced Micro Devices, Inc.
US 6,968,248 B1	November 22, 2005	Advanced Micro Devices, Inc.
US 7,080,330 B1	July 18, 2006	Advanced Micro Devices, Inc.
US 6,836,691 B1	December 28, 2004	Advanced Micro Devices, Inc.
US 8,676,538 B2	March 18, 2004	Advanced Micro Devices, Inc.

AO 120 (Rev. 08/10)

TO:	REPORT ON THE FILING OR DETERMINATION OF AN ACTION REGARDING A PATENT OR TRADEMARK
Mail Stop 8 Director of the U.S. Patent and Trademark Office P.O. Box 1450 Alexandria, VA 22313-1450	

In Compliance with 35 U.S.C. § 290 and/or 15 U.S.C. § 1116 you are hereby advised that a court action has been filed in the U.S. District Court for the Western District of Texas on the following

☐ Trademarks or ☑ Patents. (☐ the patent action involves 35 U.S.C. § 292.):

DOCKET NO.	DATE FILED	U.S. DISTRICT COURT
6:20-cv-1214	12/31/2020	for the Western District of Texas

PLAINTIFF	DEFENDANT
Ocean Semiconductor LLC	Silicon Laboratories Inc.

	PATENT OR TRADEMARK NO.	DATE OF PATENT OR TRADEMARK	HOLDER OF PATENT OR TRADEMARK
1	See attachment		See attachment
2			
3			
4			
5			

In the above—entitled case, the following patent(s)/ trademark(s) have been included:

DATE INCLUDED	INCLUDED BY ☐ Amendment ☐ Answer ☐ Cross Bill ☐ Other Pleading	
PATENT OR TRADEMARK NO.	DATE OF PATENT OR TRADEMARK	HOLDER OF PATENT OR TRADEMARK
1		
2		
3		
4		
5		

In the above—entitled case, the following decision has been rendered or judgement issued:

DECISION/JUDGEMENT

CLERK	(BY) DEPUTY CLERK	DATE

Copy 1—Upon initiation of action, mail this copy to Director **Copy 3—Upon termination of action, mail this copy to Director**
Copy 2—Upon filing document adding patent(s), mail this copy to Director **Copy 4—Case file copy**

Patent or Trademark No.	**Date of Patent or Trademark**	**Holder of Patent or Trademark**
US 6,660,651 B1	December 9, 2003	Advanced Micro Devices, Inc.
US 6,907,305 B2	June 14, 2005	Advanced Micro Devices, Inc.
US 6,725,402 B1	April 20, 2004	Advanced Micro Devices, Inc.
US 6,968,248 B1	November 22, 2005	Advanced Micro Devices, Inc.
US 7,080,330 B1	July 18, 2006	Advanced Micro Devices, Inc.
US 6,836,691 B1	December 28, 2004	Advanced Micro Devices, Inc.
US 8,676,538 B2	March 18, 2004	Advanced Micro Devices, Inc.

AO 120 (Rev. 08/10)

TO:	REPORT ON THE FILING OR DETERMINATION OF AN ACTION REGARDING A PATENT OR TRADEMARK
Mail Stop 8 Director of the U.S. Patent and Trademark Office P.O. Box 1450 Alexandria, VA 22313-1450	

In Compliance with 35 U.S.C. § 290 and/or 15 U.S.C. § 1116 you are hereby advised that a court action has been filed in the U.S. District Court for the Eastern District of Texas on the following

☐ Trademarks or ☑ Patents. (☐ the patent action involves 35 U.S.C. § 292.):

DOCKET NO.	DATE FILED	U.S. DISTRICT COURT
4:20-cv-991	12/31/2020	for the Eastern District of Texas

PLAINTIFF	DEFENDANT
Ocean Semiconductor LLC	HUAWEI DEVICE USA, INC., HUAWEI DEVICE CO., LTD., AND HISILICON TECHNOLOGIES CO., LTD

	PATENT OR TRADEMARK NO.	DATE OF PATENT OR TRADEMARK	HOLDER OF PATENT OR TRADEMARK
1	See attachment		See attachment
2			
3			
4			
5			

In the above—entitled case, the following patent(s)/ trademark(s) have been included:

DATE INCLUDED	INCLUDED BY ☐ Amendment ☐ Answer ☐ Cross Bill ☐ Other Pleading	
PATENT OR TRADEMARK NO.	DATE OF PATENT OR TRADEMARK	HOLDER OF PATENT OR TRADEMARK
1		
2		
3		
4		
5		

In the above—entitled case, the following decision has been rendered or judgement issued:

DECISION/JUDGEMENT

CLERK	(BY) DEPUTY CLERK	DATE

Copy 1—Upon initiation of action, mail this copy to Director **Copy 3—Upon termination of action, mail this copy to Director**
Copy 2—Upon filing document adding patent(s), mail this copy to Director **Copy 4—Case file copy**

Patent or Trademark No.	**Date of Patent or Trademark**	**Holder of Patent or Trademark**
US 6,660,651 B1	December 9, 2003	Advanced Micro Devices, Inc.
US 6,907,305 B2	June 14, 2005	Advanced Micro Devices, Inc.
US 6,725,402 B1	April 20, 2004	Advanced Micro Devices, Inc.
US 6,968,248 B1	November 22, 2005	Advanced Micro Devices, Inc.
US 7,080,330 B1	July 18, 2006	Advanced Micro Devices, Inc.
US 6,836,691 B1	December 28, 2004	Advanced Micro Devices, Inc.
US 8,676,538 B2	March 18, 2004	Advanced Micro Devices, Inc.

AO 120 (Rev. 08/10)

TO:	REPORT ON THE FILING OR DETERMINATION OF AN ACTION REGARDING A PATENT OR TRADEMARK
Mail Stop 8 Director of the U.S. Patent and Trademark Office P.O. Box 1450 Alexandria, VA 22313-1450	

In Compliance with 35 U.S.C. § 290 and/or 15 U.S.C. § 1116 you are hereby advised that a court action has been filed in the U.S. District Court for the District of Massachusetts on the following

☐ Trademarks or ☑ Patents. (☐ the patent action involves 35 U.S.C. § 292.):

DOCKET NO.	DATE FILED	U.S. DISTRICT COURT
	12/31/2020 Format m/d/yyyy	for the District of Massachusetts

PLAINTIFF	DEFENDANT
Ocean Semiconductor LLC	Analog Devices, Inc.

	PATENT OR TRADEMARK NO.	DATE OF PATENT OR TRADEMARK	HOLDER OF PATENT OR TRADEMARK
1	See attachment		See attachment
2		Format m/d/yyyy	
3		Format m/d/yyyy	
4		Format m/d/yyyy	
5		Format m/d/yyyy	
		Format m/d/yyyy	

In the above—entitled case, the following patent(s)/ trademark(s) have been included:

DATE INCLUDED	INCLUDED BY ☐ Amendment ☐ Answer ☐ Cross Bill ☐ Other Pleading	
Format m/d/yyyy TRADEMARK NO.	DATE OF PATENT OR TRADEMARK	HOLDER OF PATENT OR TRADEMARK
1		
2	Format m/d/yyyy	
3	Format m/d/yyyy	
4	Format m/d/yyyy	
5	Format m/d/yyyy	
	Format m/d/yyyy	

In the above—entitled case, the following decision has been rendered or judgement issued:

DECISION/JUDGEMENT

CLERK	(BY) DEPUTY CLERK	DATE
		Format m/d/yyyy

Copy 1—Upon initiation of action, mail this copy to Director **Copy 3—Upon termination of action, mail this copy to Director**
Copy 2—Upon filing document adding patent(s), mail this copy to Director **Copy 4—Case file copy**

Print Save As... Reset

Patent or Trademark No.	**Date of Patent or Trademark**	**Holder of Patent or Trademark**
US 6,660,651 B1	December 9, 2003	Advanced Micro Devices, Inc.
US 6,907,305 B2	June 14, 2005	Advanced Micro Devices, Inc.
US 6,725,402 B1	April 20, 2004	Advanced Micro Devices, Inc.
US 6,968,248 B1	November 22, 2005	Advanced Micro Devices, Inc.
US 7,080,330 B1	July 18, 2006	Advanced Micro Devices, Inc.
US 6,836,691 B1	December 28, 2004	Advanced Micro Devices, Inc.
US 8,676,538 B2	March 18, 2004	Advanced Micro Devices, Inc.

AO 120 (Rev. 08/10)

TO:	REPORT ON THE FILING OR DETERMINATION OF AN ACTION REGARDING A PATENT OR TRADEMARK
Mail Stop 8 Director of the U.S. Patent and Trademark Office P.O. Box 1450 Alexandria, VA 22313-1450	

In Compliance with 35 U.S.C. § 290 and/or 15 U.S.C. § 1116 you are hereby advised that a court action has been filed in the U.S. District Court for the District of Massachusetts on the following

☐ Trademarks or ☑ Patents. (☐ the patent action involves 35 U.S.C. § 292.):

DOCKET NO.	DATE FILED	U.S. DISTRICT COURT
	12/31/2020 Format m/d/yyyy	for the District of Massachusetts

PLAINTIFF	DEFENDANT
Ocean Semiconductor LLC	Infineon Technologies AG and Infineon Technologies Americas Corp

	PATENT OR TRADEMARK NO.	DATE OF PATENT OR TRADEMARK	HOLDER OF PATENT OR TRADEMARK
1	See attachment		See attachment
2		Format m/d/yyyy	
3		Format m/d/yyyy	
4		Format m/d/yyyy	
5		Format m/d/yyyy	
		Format m/d/yyyy	

In the above—entitled case, the following patent(s)/ trademark(s) have been included:

DATE INCLUDED Format m/d/yyyy	INCLUDED BY ☐ Amendment ☐ Answer ☐ Cross Bill ☐ Other Pleading	
TRADEMARK NO.	DATE OF PATENT OR TRADEMARK	HOLDER OF PATENT OR TRADEMARK
1		
2	Format m/d/yyyy	
3	Format m/d/yyyy	
4	Format m/d/yyyy	
5	Format m/d/yyyy	
	Format m/d/yyyy	

In the above—entitled case, the following decision has been rendered or judgement issued:

DECISION/JUDGEMENT

CLERK	(BY) DEPUTY CLERK	DATE Format m/d/yyyy

Copy 1—Upon initiation of action, mail this copy to Director **Copy 3—Upon termination of action, mail this copy to Director**
Copy 2—Upon filing document adding patent(s), mail this copy to Director **Copy 4—Case file copy**

Print Save As... Reset

Patent or Trademark No.	**Date of Patent or Trademark**	**Holder of Patent or Trademark**
US 6,660,651 B1	December 9, 2003	Advanced Micro Devices, Inc.
US 6,907,305 B2	June 14, 2005	Advanced Micro Devices, Inc.
US 6,725,402 B1	April 20, 2004	Advanced Micro Devices, Inc.
US 6,968,248 B1	November 22, 2005	Advanced Micro Devices, Inc.
US 6,420,097 B1	July 16, 2002	Advanced Micro Devices, Inc.
US 7,080,330 B1	July 18, 2006	Advanced Micro Devices, Inc.
US 6,836,691 B1	December 28, 2004	Advanced Micro Devices, Inc.
US 8,676,538 B2	March 18, 2004	Advanced Micro Devices, Inc.