Attorney Docket No. 9900-45697US4 PATENT

IN THE UNITED STATES PATENT AND TRADEMARK OFFICE

In re: Mattias TAN BERGSTRÖM et al.
Application No.: Not Yet Assigned
Filed: Concurrently Herewith
For: WIRELESS TERMINALS, NODES OF WIRELESS COMMUNICATION NETWORKS, AND METHODS OF OPERATING THE SAME

Date: November 28, 2018

Mail Stop Amendment
Commissioner for Patents
Box 1450
Alexandria, VA 22313-1450

PRELIMNARY AMENDMENT

Sir:

Please enter the present Preliminary Amendment before examination of the present application.

If any extension of time for the accompanying response or submission is required, please consider this a petition therefor. The Commissioner is hereby authorized to charge any additional fee, which may be required, or credit any refund, to our Deposit Account No. 60-1438.

Amendments to the claims begin on Page 2 of this paper.

Remarks begin on Page 14 of this paper.

In the Claims:

This listing of claims will replace all prior versions, and listings, of claims in the application:

1. (Previously Presented) A method of operating a wireless terminal in communication with a wireless communication network, the method comprising:

receiving a first Medium Access Control (MAC) Control Element (CE) from the wireless communication network, wherein the first MAC CE includes a first bit map having a first bit map size with bits of the first bit map corresponding to respective component carriers of a first group of component carriers and indicating an activation status of the respective component carriers of the first group; and

receiving a second MAC CE from the wireless communication network, wherein the second MAC CE includes a second bit map having a second bit map size with bits of the second bit map corresponding to respective component carriers of a second group of component carriers and indicating an activation status of the respective component carriers of the second group, and wherein the first bit map size of the first bit map is different than the second bit map size of the second bit map.

2. (Previously Presented) The method of Claim 1 further comprising:

responsive to the first MAC CE, activating/deactivating component carriers of the first group of component carriers responsive to the first bit map; and

responsive to the second MAC CE, activating/deactivating component carriers of the second group of component carriers responsive to the second bit map.

3. (Previously Presented) The method of Claim 1, wherein a first Logical Channel Identity (LCID) is provided for the first MAC CE, a second LCID is provided for the second MAC CE, and the first and second LCIDs are different.

4. (Previously Presented) The method of Claim 3 wherein receiving the first MAC CE comprises receiving the first MAC CE and applying bits of the first bit map to respective

component carriers of the first group of component carriers responsive to the first LCID, and wherein receiving the second MAC CE comprises receiving the second MAC CE and applying bits of the second bit map to respective component carriers of the second group of component carriers responsive to the second LCID.

5. – 6. (Canceled)

7. (Previously Presented) The method of Claim 1, wherein the first group of component carriers includes a first group of secondary component carriers, wherein the second group of component carriers includes a second group of secondary component carriers, wherein the first and second groups of secondary component carriers are different, wherein each of the first group of secondary component carriers corresponds to a respective bit of the first bit map, and wherein each of the second group of secondary component carriers corresponds to a respective bit of the second bit map.

8. (Previously Presented) The method of Claim 7, wherein a respective component carrier index is associated with each secondary component carrier of the first group, wherein a respective component carrier index is associated with each secondary component carrier of the second group, wherein at least one of the component carrier indices of the secondary component carriers of the first group exceeds a threshold, wherein none of the component carrier indices of the secondary component carriers of the second group exceeds the threshold, and wherein the first bit map size of the first bit map is greater than the second bit map size of the second bit map.

9. (Previously Presented) A wireless terminal comprising:

a transceiver configured to provide radio communications with a wireless communication network over a radio interface; and

a processor coupled with the transceiver, wherein the processor is configured to:

receive a first Medium Access Control (MAC) Control Element (CE) through the transceiver from the wireless communication network, wherein the first MAC CE includes a first bit map having a first bit map size with bits of the first bit map

corresponding to respective component carriers of a first group of component carriers and indicating an activation status of the respective component carriers of the first group; and

receive a second MAC CE through the transceiver from the wireless communication network, wherein the second MAC CE includes a second bit map having a second bit map size with bits of the second bit map corresponding to respective component carriers of a second group of component carriers and indicating an activation status of the respective component carriers of the second group, and wherein the first bit map size of the first bit map is different than the second bit map size of the second bit map.

10. (Previously Presented) The wireless terminal of Claim 9, wherein the processor is further configured to:

activate/deactivate component carriers of the first group of component carriers responsive to the first MAC CE and the first bit map; and

activate/deactivate component carriers of the second group of component carriers responsive to the second MAC CE and the second bit map.

11. (Previously Presented) The wireless terminal of Claim 9, wherein a first Logical Channel Identity (LCID) is provided for the first MAC CE, a second LCID is provided for the second MAC CE, and the first and second LCIDs are different.

12. (Previously Presented) The wireless terminal of Claim 11, wherein receiving the first MAC CE comprises receiving the first MAC CE and applying bits of the first bit map to respective component carriers of the first group of component carriers responsive to the first LCID, and wherein receiving the second MAC CE comprises receiving the second MAC CE and applying bits of the second bit map to respective component carriers of the second group of component carriers responsive to the second LCID.

13. – 14. (Canceled)

15. (Previously Presented) The wireless terminal of Claim 9, wherein the first group of component carriers includes a first group of secondary component carriers, wherein the second group of component carriers includes a second group of secondary component carriers, wherein the first and second groups of secondary component carriers are different, wherein each of the first group of secondary component carriers corresponds to a respective bit of the first bit map, and wherein each of the second group of secondary component carriers corresponds to a respective bit of the second bit map.

16. (Previously Presented) The wireless terminal of Claim 15, wherein a respective component carrier index is associated with each secondary component carrier of the first group, wherein a respective component carrier index is associated with each secondary component carrier of the second group, wherein at least one of the component carrier indices of the secondary component carriers of the first group exceeds a threshold, wherein none of the component carrier indices of the secondary component carriers of the second group exceeds the threshold, and wherein the first bit map size of the first bit map is greater than the second bit map size of the second bit map.

17. (Previously Presented) A method of operating a node of a wireless communication network, the method comprising:

transmitting a first Medium Access Control (MAC) Control Element (CE) to a wireless terminal, wherein the first MAC CE includes a first bit map having a first bit map size with bits of the first bit map corresponding to respective component carriers of a first group of component carriers and indicating an activation status of the respective component carriers of the first group; and

transmitting a second MAC CE to the wireless terminal, wherein the second MAC CE includes a second bit map having a second bit map size with bits of the second bit map corresponding to respective component carriers of a second group of component carriers and indicating an activation status of the respective component carriers of the second group, and

wherein the first bit map size of the first bit map is different than the second bit map size of the second bit map.

18. (Previously Presented) The method of Claim 17, wherein a first Logical Channel Identity (LCID) is provided for the first MAC CE, a second LCID is provided for the second MAC CE, and the first and second LCIDs are different.

19. (Canceled)

20. (Previously Presented) The method of Claim 17, wherein the first group of component carriers includes a first group of secondary component carriers, wherein the second group of component carriers includes a second group of secondary component carriers, wherein the first and second groups of secondary component carriers are different, wherein each of the first group of secondary component carriers corresponds to a respective bit of the first bit map, and wherein each of the second group of secondary component carriers corresponds to a respective bit of the second bit map.

21. (Previously Presented) The method of Claim 20, wherein a respective component carrier index is associated with each secondary component carrier of the first group, wherein a respective component carrier index is associated with each secondary component carrier of the second group, wherein at least one of the component carrier indices of the secondary component carriers of the first group exceeds a threshold, wherein none of the component carrier indices of the secondary component carriers of the second group exceeds the threshold, and wherein the first bit map size of the first bit map is greater than the second bit map size of the second bit map.

22. (Previously Presented) A node of a wireless communication network, the node comprising:

a transceiver configured to provide radio communications with one or more wireless terminals over a radio interface; and

a processor coupled with the transceiver, wherein the processor is configured to:

transmit a first Medium Access Control (MAC) Control Element (CE) through the transceiver to a wireless terminal, wherein the first MAC CE includes a first bit map having a first bit map size with bits of the first bit map corresponding to respective component carriers of a first group of component carriers and indicating an activation status of the respective component carriers of the first group; and

transmit a second MAC CE through the transceiver to the wireless terminal, wherein the second MAC CE includes a second bit map having a second bit map size with bits of the second bit map corresponding to respective component carriers of a second group of component carriers and indicating an activation status of the respective component carriers of the second group, and wherein the first bit map size of the first bit map is different than the second bit map size of the second bit map.

23. (Previously Presented) The node of Claim 22, wherein a first Logical Channel Identity (LCID) is provided for the first MAC CE, a second LCID is provided for the second MAC CE, and the first and second LCIDs are different.

24. (Canceled)

25. (Previously Presented) The node of Claim 22, wherein the first group of component carriers includes a first group of secondary component carriers, wherein the second group of component carriers includes a second group of secondary component carriers, wherein the first and second groups of secondary component carriers are different, wherein each of the first group of secondary component carriers corresponds to a respective bit of the first bit map, and wherein each of the second group of secondary component carriers corresponds to a respective bit of the second bit map.

26. (Previously Presented) The node of Claim 25, wherein a respective component carrier index is associated with each secondary component carrier of the first group, wherein a respective component carrier index is associated with each secondary component carrier of the second group, wherein at least one of the component carrier indices of the secondary component

carriers of the first group exceeds a threshold, wherein none of the component carrier indices of the secondary component carriers of the second group exceeds the threshold, and wherein the first bit map size of the first bit map is greater than the second bit map size of the second bit map.

27. (Previously Presented) A method of operating a wireless terminal in communication with a wireless communication network, the method comprising:

receiving a medium access control, MAC, control element, CE, from the wireless communication network, wherein the MAC CE has one of a plurality of plurality of formats, wherein a first format of the plurality of formats has a first bit map size and the first format is associated with a first Logical Channel Identity (LCID), wherein a second format of the plurality of formats has a second bit map size and the second format is associated with a second LCID, wherein the first and second bit map sizes are different, and wherein the first and second LCIDs are different; and

responsive to receiving one of the first and second LCIDs together with the MAC CE, applying a bit map of the MAC CE using one of the first and second bit map sizes to activate/deactivate component carriers of a group of component carriers based on the one of the first and second LCIDs received together with the MAC CE.

28. (Previously Presented) The method of Claim 27, wherein the first LICD is received together with the MAC CE, wherein the MAC CE has the first format, wherein the bit map has the first bit map size of the first format, and wherein applying the bit map comprises applying the bit map of the MAC CE using the first bit map size to activate/deactivate respective ones of the component carriers of the group of component carriers responsive to receiving the first LCID together with the MAC CE.

29. (Previously Presented) The method of Claim 28, wherein the group of component carriers includes a group of secondary component carriers, and wherein each of the group of secondary component carriers corresponds to a respective bit of the bit map of the MAC CE.

30. (Previously Presented) The method of Claim 29, wherein a respective component carrier index is associated with each component carrier of the group of secondary component carriers, wherein at least one of the component carrier indices of the component carriers of the group of secondary component carriers exceeds a threshold, and wherein the first bit map size is greater than the second bit map size.

31. (Previously Presented) The method of Claim 28, wherein the MAC CE is a first MAC CE, wherein the bit map is a first bit map, and wherein the component carriers are first component carriers of a first group, the method further comprising:

receiving a second MAC CE from the wireless communication network, wherein the second MAC CE is received together with the second LCID, wherein the second MAC CE has the second format, and wherein second MAC CE has a second bit map with the second bit map size of the second format; and

responsive to receiving the second LCID together with the second MAC CE, applying the second bit map of the second MAC CE using the second bit map size to activate/deactivate second component carriers of a second group of component carriers.

32. (Previously Presented) A wireless terminal comprising:

a transceiver configured to provide radio communications with a wireless communication network over a radio interface; and

a processor coupled with the transceiver, wherein the processor is configured to:

receive a medium access control, MAC, control element, CE, from the wireless communication network, wherein the MAC CE has one of a plurality of plurality of formats, wherein a first format of the plurality of formats has a first bit map size and the first format is associated with a first Logical Channel Identity (LCID), wherein a second format of the plurality of formats has a second bit map size and the second format is associated with a second LCID, wherein the first and second bit map sizes are different, and wherein the first and second LCIDs are different; and

responsive to receiving one of the first and second LCIDs together with the MAC CE, applying a bit map of the MAC CE using one of the first and second bit map sizes to

activate/deactivate component carriers of a group of component carriers based on the one of the first and second LCIDs received together with the MAC CE.

33. (Previously Presented) The wireless terminal of Claim 32, wherein the first LICD is received together with the MAC CE, wherein the MAC CE has the first format, wherein the bit map has the first bit map size of the first format, and wherein applying the bit map comprises applying the bit map of the MAC CE using the first bit map size to activate/deactivate respective ones of the component carriers of the group of component carriers responsive to receiving the first LCID together with the MAC CE.

34. (Previously Presented) The wireless terminal of Claim 33, wherein the group of component carriers includes a group of secondary component carriers, and wherein each of the group of secondary component carriers corresponds to a respective bit of the bit map of the MAC CE.

35. (Previously Presented) The wireless terminal of Claim 34, wherein a respective component carrier index is associated with each component carrier of the group of secondary component carriers, wherein at least one of the component carrier indices of the component carriers of the group of secondary component carriers exceeds a threshold, and wherein the first bit map size is greater than the second bit map size.

36. (Previously Presented) The wireless terminal of Claim 33, wherein the MAC CE is a first MAC CE, wherein the bit map is a first bit map, and wherein the component carriers are first component carriers of a first group, wherein the processor is further configured to:

receive a second MAC CE from the wireless communication network, wherein the second MAC CE is received together with the second LCID, wherein the second MAC CE has the second format, and wherein second MAC CE has a second bit map with the second bit map size of the second format; and

apply the second bit map of the second MAC CE using the second bit map size to activate/deactivate second component carriers of a second group of component carriers responsive to receiving the second LCID together with the second MAC CE.

37. (Previously Presented) A method of operating a node of a wireless communication network, the method comprising:

selecting one of first and second formats for a medium access control, MAC, control element, CE, wherein the first format of the plurality of formats has a first bit map size and the first format is associated with a first Logical Channel Identify (LCID), wherein the second format has a second bit map size and the second format is associated with a second LCID, wherein the first and second bit map sizes are different, and wherein the first and second LCIDs are different; and

transmitting the MAC CE to a wireless terminal together with one of the first and second LCIDs associated with the one of the first and second formats selected for the MAC CE, wherein the MAC CE includes a bit map having one of the first and second bit map sizes associated with the one of the plurality of formats selected for the MAC CE, wherein bits of the bit map correspond to respective component carriers of a group of component carriers and includes an activation status of the respective component carriers of the group.

38. (Previously Presented) The method of Claim 37, wherein selecting comprises selecting the first format for the MAC CE, wherein the first LICD is transmitted together with the MAC CE, wherein the MAC CE has the first format, and wherein the bit map has the first bit map size of the first format.

39. (Previously Presented) The method of Claim 38, wherein the group of component carriers includes a group of secondary component carriers, and wherein each of the group of secondary component carriers corresponds to a respective bit of the bit map of the MAC CE.

40. (Previously Presented) The method of Claim 39, wherein a respective component carrier index is associated with each component carrier of the group of secondary component

carriers, wherein the first bit map size is greater than the second bit map size, and wherein the first format for the MAC CE is selected responsive to determining that at least one of the component carrier indices of the component carriers of the group of secondary component carriers exceeds a threshold.

41. (Previously Presented) The method of Claim 38, wherein the MAC CE is a first MAC CE, wherein the bit map is a first bit map, and wherein the component carriers are first component carriers of a first group, the method further comprising:

selecting the second format for a second MAC CE; and

transmitting the second MAC CE to the wireless terminal together with the second LCID associated with the second format, wherein the second MAC CE includes a bit map having the second bit map size associated with the second format selected for the MAC CE, wherein bits of the second bit map correspond to respective component carriers of a second group of component carriers and includes an activation status of the respective component carriers of the second group.

42. (Previously Presented) A node of a wireless communication network comprising:

a transceiver configured to provide radio communications with a wireless terminal over a radio interface; and

a processor coupled with the transceiver, wherein the processor is configured to:

select one of first and second formats for a medium access control, MAC, control element, CE, wherein the first format of the plurality of formats has a first bit map size and the first format is associated with a first Logical Channel Identify (LCID), wherein the second format has a second bit map size and the second format is associated with a second LCID, wherein the first and second bit map sizes are different, and wherein the first and second LCIDs are different; and

transmit the MAC CE to a wireless terminal together with one of the first and second LCIDs associated with the one of the first and second formats selected for the MAC CE, wherein the MAC CE includes a bit map having one of the first and second bit map sizes associated with the one of the plurality of formats selected for the MAC CE,

wherein bits of the bit map correspond to respective component carriers of a group of component carriers and includes an activation status of the respective component carriers of the group.

43. (Previously Presented) The node of Claim 42, wherein selecting comprises selecting the first format for the MAC CE, wherein the first LICD is transmitted together with the MAC CE, wherein the MAC CE has the first format, and wherein the bit map has the first bit map size of the first format.

44. (Previously Presented) The node of Claim 43, wherein the group of component carriers includes a group of secondary component carriers, and wherein each of the group of secondary component carriers corresponds to a respective bit of the bit map of the MAC CE.

45. (Previously Presented) The node of Claim 44, wherein a respective component carrier index is associated with each component carrier of the group of secondary component carriers, wherein the first bit map size is greater than the second bit map size, and wherein the first format for the MAC CE is selected responsive to determining that at least one of the component carrier indices of the component carriers of the group of secondary component carriers exceeds a threshold.

46. (Previously Presented) The node of Claim 43, wherein the MAC CE is a first MAC CE, wherein the bit map is a first bit map, and wherein the component carriers are first component carriers of a first group, wherein the processor is further configured to:

select the second format for a second MAC CE; and

transmit the second MAC CE to the wireless terminal together with the second LCID associated with the second format, wherein the second MAC CE includes a bit map having the second bit map size associated with the second format selected for the MAC CE, wherein bits of the second bit map correspond to respective component carriers of a second group of component carriers and includes an activation status of the respective component carriers of the second group.

REMARKS

Applicant has amended the specification to cancel Claims 5-6, 13-14, 19, and 24. These claims have been canceled to reduce the fee for excess claims.

Entry of this Preliminary Amendment, examination of the application, and allowance of the application are respectfully requested. If, in the opinion of the Examiner, a telephonic conference would expedite the examination of this matter, the Examiner is invited to call the undersigned attorney at 984-219-3455.

Respectfully submitted,

/Scott C. Hatfield/

Scott C. Hatfield
Registration No. 38,176
Attorney for Applicant

Customer Number 146825
Sage Patent Group
P.O. Box 30789
Raleigh, NC 27622
984-219-3358
984-538-0416 (Fax)

Attorney Docket No. 9900-45697US4 PATENT

IN THE UNITED STATES PATENT AND TRADEMARK OFFICE

In re: Mattias TAN BERGSTRÖM Confirmation No: Not Yet Known
Application No.: Not Yet Known
Filed: Herewith
For: WIRELESS TERMINALS, NODES OF WIRELESS COMMUNICATION NETWORKS, AND METHODS OF OPERATING THE SAME

November 28, 2018

Mail Stop
Commissioner for Patents
Box 1450
Alexandria, VA 22313-1450

INFORMATION DISCLOSURE STATEMENT TRANSMITTAL

Sir:

Attached is an Information Disclosure Statement listing of documents previously of record in parent Application No. 15/678,199, filed August 16, 2017 and/or Application No. 14/911,875 filed February 12, 2016. As the benefit of this application is claimed under 35 U.S.C. § 120, no copies need to be furnished in accordance with 37 C.F.R. § 1.98(d); however, copies will be furnished on request.

☒ In accordance with **37 CFR 1.97(b)**, the information disclosure statement is being filed:

- ☒ (1) within three months of the filing date of a national application other than a continued prosecution application under §1.53(d);
- ☐ (2) within three months of the date of entry of the national stage as set forth in §1.491 in an international application;
- ☐ (3) before the mailing of a first Office Action on the merits; or
- ☐ (4) before the mailing of a first Office Action after the filing of a request for continued examination under §1.114.

☐ In accordance with **37 CFR 1.97(c)**, the information disclosure statement is being filed after the period specified in 37 CFR 1.97(b) above, but before the mailing date of any of a final action under §1.113, a notice of allowance under §1.311, or an action that otherwise closes prosecution in the application, and is accompanied by **one** of the following:

☐ (1) The statement specified under **37 CFR 1.97(e)**, as follows:

☐ Each item of information contained in the information disclosure statement was first cited in any communication from a foreign patent office in a counterpart foreign application not more than three months prior to the filing of the information disclosure statement; **or**

☐ No item of information contained in the information disclosure statement was cited in a communication from a foreign patent office in a counterpart foreign application, and, to the knowledge of the person signing the certification after making reasonable inquiry, no item of information contained in the information disclosure statement was known to any individual designated in §1.56(c) more than three months prior to the filing of the information disclosure statement; **or**

☐ (2) The fee set forth in §1.17(p);

☐ In accordance with **37 CFR 1.97(d)**, the information disclosure statement is being filed after the period specified in 37 CFR 1.97(c) above, but on or before payment of the issue fee, and is accompanied by **both** of the following:

☐ (1) The statement specified under **37 CFR 1.97(e)**, as follows:

☐ That each item of information contained in the information disclosure statement was first cited in any communication from a foreign patent office in a counterpart foreign application not more than three months prior to the filing of the information disclosure statement; **or**

☐ That no item of information contained in the information disclosure statement was cited in a communication from a foreign patent office in a counterpart foreign application, and, to the knowledge of the person signing the certification after making reasonable inquiry, no item of information contained in the information disclosure statement was known to any individual designated in §1.56(c) more than three months prior to the filing of the information disclosure statement; **and**

☐ (2) The fee set forth in §1.17(p);

In accordance with **37 CFR 1.97(g)**, the information disclosure statement shall not be construed as a representation that a search has been made.

In accordance with **37 CFR 1.97(h)**, the information disclosure statement shall not be construed to be an admission that the information cited in the statement is, or is considered to be, material to patentability as defined in §1.56(b).

☐ The Director is hereby authorized to charge the fee specified in 37 C.F.R. § 1.17(p), and any fee deficiency or credit any overpayment, to Deposit Account No. 60-1438;

☐ Fees are to be charged to a credit card; or

☒ No fee is believed due. However, the Director is hereby authorized to charge any deficiency or credit any overpayment to Deposit Account No. 60-1438.

Respectfully submitted,

/Scott C. Hatfield/

Scott C. Hatfield
Registration No. 38,176
Attorney for Applicant

Customer Number 146825
Sage Patent Group
P.O. Box 30789, Raleigh, NC 27622
984-219-3358
984-538-0416 (Fax)

INFORMATION DISCLOSURE STATEMENT BY APPLICANT *(use as many sheets as necessary)*				***Complete if Known***	
				Application Number	Not Yet Known
				Filing Date	Herewith
				First Named Inventor	TAN BERGSTRÖM
				Art Unit	Not Yet Known
				Examiner Name	Not Yet Known
Sheet	**1**	of	**2**	Attorney Docket Number	9900-45697US4

U.S. PATENT DOCUMENTS					
Examiner Initials*	Cite No.	Document Number Number-Kind Code (if known)	Publication Date MM-DD-YYYY	Name of Patentee or Applicant of Cited Document	Pages, Columns, Lines, Where Relevant Passages or Relevant Figures Appear
	1.	US- 8730829	05-20-2014	Hwang, et al.	
	2.	US- 8798663	08-05-2014	Wang, et al.	
	3.	US- 8811322	08-19-2014	Feuersanger, et al.	
	4.	US- 9402255	07-26-2016	LOHR, et al.	
	5.	US 9642161	05-02-2017	WU, et al.	
	6.	US 2013/0114576	05-09-2013	Kwon, et al.	
	7.	US 2013/0215866	08-22-2013	Ahn, et al.	
	8.	US 9210671	12-08-2015	Bostrom, et al.	
	9.	US 2012/0224552	09-06-2012	Feuersanger	
	10.	US 20120083308	04-05-2012	Wang	

FOREIGN PATENT DOCUMENTS						
Examiner Initials*	Cite No.	Foreign Patent Document Country Code, Number, Kind Code (if known)	Publication Date MM-DD-YYYY	Name of Patentee or Applicant of Cited Document	Pages, Columns, Lines, Where Relevant Passages or Relevant Figures Appear	T
	1.	WO 2012/165821	12-06-2012	Pantech Co., Ltd.		
	2.	WO 2013/115263	08-08-2013	NTT Docomo Inc.		
	3.	WO 2011/159222	12-22-2011	Bostroem, et al.		
	4.	WO 2012/111980	08-23-2012	Kim, et al.		
	5.	WO 2013/025547	02-21-2013	Shin, et al.		
	6.	JPA 2015-516695	06-11-2015	Pantech Co., Ltd.		
	7.	JPA 2013-179551	09-09-2013	NTT Docomo Inc.		
	8.	EP 2317815	05-04-2011	Feuersaenger, et al.		
	9.	EP 2693820	02-05-2014	Li, et al.		
	10.	RU 2013102306 A	07-27-2014	Telefonaktiebolaget LM Ericsson (PUBL)		
	11.	RU 2510595 C2	03-27-2014	Acer Incorporated		

NON PATENT LITERATURE DOCUMENTS			
Examiner Initials*	Cite No.	Include name of the author (in CAPITAL LETTERS), title of the article (when appropriate), title of the item (book, magazine, journal, serial, symposium, catalog, etc.), date, page(s), volume-issue number(s), publisher, city and/or country where published	T
	1.	Nokia Siemens Networks et al., "PHR remaining issues", Agenda Item 7.1.1.6, Document for: Discussion and Decision, 3GPP TSG-RAN WG2 Meeting #71 bis, R2-105379, Xian, China, October 11-15, 2010, 8 pp.	
	2.	International Search Report and Written Opinion of the International Searching Authority, Application No. PCT/SE2015/051191, 02-25-2016	
	3.	Ericsson, "Running MAC CR for Carrier Aggregation enhancements", Change Request, 3GPP TSG-RAN WG2 Meeting #91 bis, R2-154910, Malmo, Sweden, October 5-9, 2015, 75 pp.	
	4.	3GPP, Technical Specification - "3rd Generation Partnership Project; Technical Specification Group Radio Access Network; Evolved Universal Terrestrial Radio Access (E-UTRA); Radio Resource Control (RRC); Protocol specification (Release 12)", 3GPP TS 36.331 V12.4.1 (2014-12), 410 pp.	

Examiner Signature		Date Considered	

*EXAMINER: Initial if reference considered, whether or not citation is in conformance with MPEP 609. Draw line through citation if not in conformance and not considered. Include copy of this form with next communication to applicant.

INFORMATION DISCLOSURE STATEMENT BY APPLICANT *(use as many sheets as necessary)*				***Complete if Known***	
				Application Number	Not Yet Known
				Filing Date	Herewith
				First Named Inventor	TAN BERGSTRÖM
				Art Unit	Not Yet Known
				Examiner Name	Not Yet Known
Sheet	**2**	of	**2**	Attorney Docket Number	9900-45697US4

	5.	3GPP, Technical Specification - "3rd Generation Partnership Project; Technical Specification Group Radio Access Network; Evolved Universal Terrestrial Radio Access (E-UTRA); Medium Access Control (MAC) protocol specification (Release 12)", 3GPP TS 36.321 V12.3.0 (2014-09), 57 pp.	
	6.	3GPP, Technical Specification - "3rd Generation Partnership Project; Technical Specification Group Radio Access Network; Evolved Universal Terrestrial Radio Access (E-UTRA); Physical layer procedures (Release 12)", 3GPP TS 36.213 V12.4.0 (2014-12), 225 pp.	
	7.	3GPP, Technical Specification - "3rd Generation Partnership Project; Technical Specification Group Radio Access Network; Evolved Universal Terrestrial Radio Access (E-UTRA); Requirements for support of radio resource management (Release 12)", 3GPP TS 36.133 V12.6.0 (2014-12), 992 pp.	
	8.	3GPP, Technical Specification - "3rd Generation Partnership Project; Technical Specification Group Radio Access Network; Evolved Universal Terrestrial Radio Access (E-UTRA); User Equipment (UE) radio transmission and reception (Release 12)", 3GPP TS 36.101 V12.6.0 (2014-12), 589 pp.	
	9.	"MAC CE impact due to CA enhancements," 3GPP TSG-RAN WG2 #89bis, Bratislava, Slovakia, April 20-24, 2015, Agenda Item 7.2.3, Ericsson (Tdoc R2-151506) 6 pages.	
	10.	"New format for Activation/Deactivation MAC Control Element," 3GPP TSG RAN WG2 #89bis, April 20-24, 2015, Bratislava, Slovakia, Agenda Item 7.2.3, Samsung (R2-151620) 2 pages.	
	11.	Japanese Office Action mailed October 5, 2018, Application No. 2017-535645 (Japanese-language document, 3 pages) and English-language Summary of the Office Action, 2 pages.	
	12.	Search Report (English-Language Translation) Russian Patent Application No. 20171284585/07 (049226) March 6, 2018, 2 pages.	

Examiner Signature		Date Considered	

*EXAMINER: Initial if reference considered, whether or not citation is in conformance with MPEP 609. Draw line through citation if not in conformance and not considered. Include copy of this form with next communication to applicant.

Electronic Patent Application Fee Transmittal				
Application Number:				
Filing Date:				
Title of Invention:	WIRELESS TERMINALS, NODES OF WIRELESS COMMUNICATION NETWORKS, AND METHODS OF OPERATING THE SAME			
First Named Inventor/Applicant Name:	Mattias TAN BERGSTRÖM			
Filer:	Scott C. Hatfield/Cheryl Ramey			
Attorney Docket Number:	9900-45697US4			
Filed as Large Entity				
Filing Fees for Utility under 35 USC 111(a)				
Description	**Fee Code**	**Quantity**	**Amount**	**Sub-Total in USD($)**
Basic Filing:				
UTILITY APPLICATION FILING	1011	1	300	300
UTILITY SEARCH FEE	1111	1	660	660
UTILITY EXAMINATION FEE	1311	1	760	760
Pages:				
Claims:				
CLAIMS IN EXCESS OF 20	1202	20	100	2000
INDEPENDENT CLAIMS IN EXCESS OF 3	1201	5	460	2300
Miscellaneous-Filing:				

Description	Fee Code	Quantity	Amount	Sub-Total in USD($)
Petition:				
Patent-Appeals-and-Interference:				
Post-Allowance-and-Post-Issuance:				
Extension-of-Time:				
Miscellaneous:				
		Total in USD ($)		**6020**

Electronic Acknowledgement Receipt	
EFS ID:	34428204
Application Number:	16203450
International Application Number:	
Confirmation Number:	2596
Title of Invention:	WIRELESS TERMINALS, NODES OF WIRELESS COMMUNICATION NETWORKS, AND METHODS OF OPERATING THE SAME
First Named Inventor/Applicant Name:	Mattias TAN BERGSTRÖM
Customer Number:	146825
Filer:	Scott C. Hatfield/Cheryl Ramey
Filer Authorized By:	Scott C. Hatfield
Attorney Docket Number:	9900-45697US4
Receipt Date:	28-NOV-2018
Filing Date:	
Time Stamp:	19:48:31
Application Type:	Utility under 35 USC 111(a)

Payment information:

Submitted with Payment	yes
Payment Type	CARD
Payment was successfully received in RAM	$6020
RAM confirmation Number	112918INTEFSW19485600
Deposit Account	
Authorized User	
The Director of the USPTO is hereby authorized to charge indicated fees and credit any overpayment as follows:	

File Listing:

Document Number	Document Description	File Name	File Size(Bytes)/ Message Digest	Multi Part /.zip	Pages (if appl.)
1	Application Data Sheet	P45697_US4_2018_11_28_ADS.PDF	1823793 95e6af721e904e2ee268cb2bfcdf2123df4c5d76	no	9
Warnings:					
Information:					
2		P45697_US4_2018_11_28_Application.pdf	398092 5795fd742e03c7d67789caae34cb8835ad6d9eff	yes	74
	Multipart Description/PDF files in .zip description				
	Document Description		**Start**	**End**	
	Specification		1	61	
	Claims		62	73	
	Abstract		74	74	
Warnings:					
Information:					
3	Drawings-only black and white line drawings	P45697_US4_2018_11_28_Drawings.pdf	708762 702569a79253dfc530a98c6d6eac58cda74e59c2	no	17
Warnings:					
Information:					
4	Oath or Declaration filed	P45697_US4_2018_11_28_Declarations.pdf	289597 281ea76529116c5b4c3eabfb73502d5b2158d21a	no	3
Warnings:					
Information:					
5	Power of Attorney	EAB_POA.pdf	117373 a69465c0e7c9c3f9be513b5290bb305714fd4e28	no	1

Warnings:					
Information:					
6		P45697_US4_2018_11_28_Preliminary_Amendment.pdf	71901 7263c5b3f0c184be950f366e966be58aed98680f	yes	14
	Multipart Description/PDF files in .zip description				
	Document Description		**Start**	**End**	
	Preliminary Amendment		1	1	
	Claims		2	13	
	Applicant Arguments/Remarks Made in an Amendment		14	14	
Warnings:					
Information:					
7	Transmittal Letter	P45697_US1_2018_11_28_IDS_Transmittal.pdf	20323 6820f7a9cb251f77ec120149187bd8352925b05a	no	2
Warnings:					
Information:					
8	Information Disclosure Statement (IDS) Form (SB08)	P45697_US1_2018_11_28_IDS_Listing_of_References.pdf	35041 efb97aa630ea346f7daf81aabb32183b9ef3da18	no	2
Warnings:					
Information:					
This is not an USPTO supplied IDS fillable form					
9	Fee Worksheet (SB06)	fee-info.pdf	38388 33c429c5f749f9d8be447d40bd834963aa218787	no	2
Warnings:					
Information:					
		Total Files Size (in bytes):	3503270		

This Acknowledgement Receipt evidences receipt on the noted date by the USPTO of the indicated documents, characterized by the applicant, and including page counts, where applicable. It serves as evidence of receipt similar to a Post Card, as described in MPEP 503.

New Applications Under 35 U.S.C. 111

If a new application is being filed and the application includes the necessary components for a filing date (see 37 CFR 1.53(b)-(d) and MPEP 506), a Filing Receipt (37 CFR 1.54) will be issued in due course and the date shown on this Acknowledgement Receipt will establish the filing date of the application.

National Stage of an International Application under 35 U.S.C. 371

If a timely submission to enter the national stage of an international application is compliant with the conditions of 35 U.S.C. 371 and other applicable requirements a Form PCT/DO/EO/903 indicating acceptance of the application as a national stage submission under 35 U.S.C. 371 will be issued in addition to the Filing Receipt, in due course.

New International Application Filed with the USPTO as a Receiving Office

If a new international application is being filed and the international application includes the necessary components for an international filing date (see PCT Article 11 and MPEP 1810), a Notification of the International Application Number and of the International Filing Date (Form PCT/RO/105) will be issued in due course, subject to prescriptions concerning national security, and the date shown on this Acknowledgement Receipt will establish the international filing date of the application.

PTO/AIA/14 (11-15)
Approved for use through 04/30/2017. OMB 0651-0032
U.S. Patent and Trademark Office; U.S. DEPARTMENT OF COMMERCE
Under the Paperwork Reduction Act of 1995, no persons are required to respond to a collection of information unless it contains a valid OMB control number.

Application Data Sheet 37 CFR 1.76	Attorney Docket Number	9900-45697US4
	Application Number	
Title of Invention	WIRELESS TERMINALS, NODES OF WIRELESS COMMUNICATION NETWORKS, AND METHODS OF OPERATING THE SAME	

The application data sheet is part of the provisional or nonprovisional application for which it is being submitted. The following form contains the bibliographic data arranged in a format specified by the United States Patent and Trademark Office as outlined in 37 CFR 1.76.
This document may be completed electronically and submitted to the Office in electronic format using the Electronic Filing System (EFS) or the document may be printed and included in a paper filed application.

Secrecy Order 37 CFR 5.2:

☐ Portions or all of the application associated with this Application Data Sheet may fall under a Secrecy Order pursuant to 37 CFR 5.2 (Paper filers only. Applications that fall under Secrecy Order may not be filed electronically.)

Inventor Information:

Inventor 1 Remove

Legal Name

Prefix	Given Name	Middle Name	Family Name	Suffix
	Mattias		TAN BERGSTRÖM	

Residence Information (Select One) US Residency ● Non US Residency Active US Military Service

City	Stockholm	Country of Residence [i]	SE

Mailing Address of Inventor:

Address 1	Båtklubbsgatan 1, 3 tr		
Address 2			
City	Stockholm	State/Province	
Postal Code	SE-120 71	Country [i]	SE

Inventor 2 Remove

Legal Name

Prefix	Given Name	Middle Name	Family Name	Suffix
	Riikka		SUSITAIVAL	

Residence Information (Select One) US Residency ◉ Non US Residency Active US Military Service

City	Helsinki	Country of Residence [i]	FI

Mailing Address of Inventor:

Address 1	Mannerheimintie 82 A 13		
Address 2			
City	Helsinki	State/Province	
Postal Code	FIN-00250	Country [i]	FI

Inventor 3 Remove

Legal Name

PTO/AIA/14 (11-15)
Approved for use through 04/30/2017. OMB 0651-0032
U.S. Patent and Trademark Office; U.S. DEPARTMENT OF COMMERCE
Under the Paperwork Reduction Act of 1995, no persons are required to respond to a collection of information unless it contains a valid OMB control number.

Application Data Sheet 37 CFR 1.76	Attorney Docket Number	9900-45697US4
	Application Number	
Title of Invention	WIRELESS TERMINALS, NODES OF WIRELESS COMMUNICATION NETWORKS, AND METHODS OF OPERATING THE SAME	

Prefix	Given Name	Middle Name	Family Name	Suffix
	Magnus		STATTIN	

Residence Information (Select One) US Residency ◉ Non US Residency Active US Military Service

City	Upplands Väsby	Country of Residence [i]	SE

Mailing Address of Inventor:

Address 1	Wäckareslingan 17		
Address 2			
City	Upplands Väsby	**State/Province**	
Postal Code	SE-194 44	**Country** [i]	SE

All Inventors Must Be Listed - Additional Inventor Information blocks may be generated within this form by selecting the **Add** button. Add

Correspondence Information:

Enter either Customer Number or complete the Correspondence Information section below.
For further information see 37 CFR 1.33(a).

☐ **An Address is being provided for the correspondence Information of this application.**

Customer Number	146825		
Email Address	instructions@sagepat.com	Add Email	Remove Email

Application Information:

Title of the Invention	WIRELESS TERMINALS, NODES OF WIRELESS COMMUNICATION NETWORKS, AND METHODS OF OPERATING THE SAME		
Attorney Docket Number	9900-45697US4	**Small Entity Status Claimed**	☐
Application Type	Nonprovisional		
Subject Matter	Utility		
Total Number of Drawing Sheets (if any)	17	**Suggested Figure for Publication (if any)**	

Filing By Reference:

Only complete this section when filing an application by reference under 35 U.S.C. 111(c) and 37 CFR 1.57(a). Do not complete this section if application papers including a specification and any drawings are being filed. Any domestic benefit or foreign priority information must be provided in the appropriate section(s) below (i.e., "Domestic Benefit/National Stage Information" and "Foreign Priority Information").

For the purposes of a filing date under 37 CFR 1.53(b), the description and any drawings of the present application are replaced by this reference to the previously filed application, subject to conditions and requirements of 37 CFR 1.57(a).

[i]

Application number of the previously filed application	Filing date (YYYY-MM-DD)	Intellectual Property Authority or Country

PTO/AIA/14 (11-15)
Approved for use through 04/30/2017. OMB 0651-0032
U.S. Patent and Trademark Office; U.S. DEPARTMENT OF COMMERCE
Under the Paperwork Reduction Act of 1995, no persons are required to respond to a collection of information unless it contains a valid OMB control number.

Application Data Sheet 37 CFR 1.76	Attorney Docket Number	9900-45697US4
	Application Number	
Title of Invention	WIRELESS TERMINALS, NODES OF WIRELESS COMMUNICATION NETWORKS, AND METHODS OF OPERATING THE SAME	

Publication Information:

☐ Request Early Publication (Fee required at time of Request 37 CFR 1.219)
☐ **Request Not to Publish.** I hereby request that the attached application not be published under 35 U.S.C. 122(b) and certify that the invention disclosed in the attached application **has not and will not** be the subject of an application filed in another country, or under a multilateral international agreement, that requires publication at eighteen months after filing.

Representative Information:

Representative information should be provided for all practitioners having a power of attorney in the application. Providing this information in the Application Data Sheet does not constitute a power of attorney in the application (see 37 CFR 1.32).
Either enter Customer Number or complete the Representative Name section below. If both sections are completed the customer Number will be used for the Representative Information during processing.

Please Select One:	● Customer Number	US Patent Practitioner	○ Limited Recognition (37 CFR 11.9)
Customer Number	146825		

Domestic Benefit/National Stage Information:

This section allows for the applicant to either claim benefit under 35 U.S.C. 119(e), 120, 121, 365(c), or 386(c) or indicate National Stage entry from a PCT application. Providing benefit claim information in the Application Data Sheet constitutes the specific reference required by 35 U.S.C. 119(e) or 120, and 37 CFR 1.78.
When referring to the current application, please leave the "Application Number" field blank.

Prior Application Status	Pending		Remove
Application Number	Continuity Type	Prior Application Number	Filing or 371(c) Date (YYYY-MM-DD)
	Continuation of	15678199	2017-08-16
Prior Application Status	Patented		Remove

Application Number	Continuity Type	Prior Application Number	Filing Date (YYYY-MM-DD)	Patent Number	Issue Date (YYYY-MM-DD)
15678199	Continuation of	14911875	2016-02-12	9787456	2017-10-10

Prior Application Status	Expired		Remove
Application Number	Continuity Type	Prior Application Number	Filing or 371(c) Date (YYYY-MM-DD)
14911875	a 371 of international	PCT/SE2015/051191	2015-11-10
Prior Application Status	Expired		Remove
Application Number	Continuity Type	Prior Application Number	Filing or 371(c) Date (YYYY-MM-DD)
PCT/SE2015/051191	Claims benefit of provisional	62149899	2015-04-20

Application Data Sheet 37 CFR 1.76	Attorney Docket Number	9900-45697US4
	Application Number	
Title of Invention	WIRELESS TERMINALS, NODES OF WIRELESS COMMUNICATION NETWORKS, AND METHODS OF OPERATING THE SAME	

Prior Application Status	Expired		Remove
Application Number	Continuity Type	Prior Application Number	Filing or 371(c) Date (YYYY-MM-DD)
PCT/SE2015/051191	Claims benefit of provisional	62102685	2015-01-13
Additional Domestic Benefit/National Stage Data may be generated within this form by selecting the **Add** button.			Add

Foreign Priority Information:

This section allows for the applicant to claim priority to a foreign application. Providing this information in the application data sheet constitutes the claim for priority as required by 35 U.S.C. 119(b) and 37 CFR 1.55. When priority is claimed to a foreign application that is eligible for retrieval under the priority document exchange program (PDX)[i] the information will be used by the Office to automatically attempt retrieval pursuant to 37 CFR 1.55(i)(1) and (2). Under the PDX program, applicant bears the ultimate responsibility for ensuring that a copy of the foreign application is received by the Office from the participating foreign intellectual property office, or a certified copy of the foreign priority application is filed, within the time period specified in 37 CFR 1.55(g)(1).

			Remove
Application Number	Country[i]	Filing Date (YYYY-MM-DD)	Access Code[i] (if applicable)
Additional Foreign Priority Data may be generated within this form by selecting the **Add** button.			Add

Statement under 37 CFR 1.55 or 1.78 for AIA (First Inventor to File) Transition Applications

☐ This application (1) claims priority to or the benefit of an application filed before March 16, 2013 and (2) also contains, or contained at any time, a claim to a claimed invention that has an effective filing date on or after March 16, 2013.
NOTE: By providing this statement under 37 CFR 1.55 or 1.78, this application, with a filing date on or after March 16, 2013, will be examined under the first inventor to file provisions of the AIA.

Application Data Sheet 37 CFR 1.76	Attorney Docket Number	9900-45697US4
	Application Number	
Title of Invention	WIRELESS TERMINALS, NODES OF WIRELESS COMMUNICATION NETWORKS, AND METHODS OF OPERATING THE SAME	

Authorization or Opt-Out of Authorization to Permit Access:

When this Application Data Sheet is properly signed and filed with the application, applicant has provided written authority to permit a participating foreign intellectual property (IP) office access to the instant application-as-filed (see paragraph A in subsection 1 below) and the European Patent Office (EPO) access to any search results from the instant application (see paragraph B in subsection 1 below).

Should applicant choose not to provide an authorization identified in subsection 1 below, applicant **must opt-out** of the authorization by checking the corresponding box A or B or both in subsection 2 below.

NOTE: This section of the Application Data Sheet is **ONLY** reviewed and processed with the **INITIAL** filing of an application. After the initial filing of an application, an Application Data Sheet cannot be used to provide or rescind authorization for access by a foreign IP office(s). Instead, Form PTO/SB/39 or PTO/SB/69 must be used as appropriate.

1. Authorization to Permit Access by a Foreign Intellectual Property Office(s)

A. Priority Document Exchange (PDX) - Unless box A in subsection 2 (opt-out of authorization) is checked, the undersigned hereby **grants the USPTO authority** to provide the European Patent Office (EPO), the Japan Patent Office (JPO), the Korean Intellectual Property Office (KIPO), the State Intellectual Property Office of the People's Republic of China (SIPO), the World Intellectual Property Organization (WIPO), and any other foreign intellectual property office participating with the USPTO in a bilateral or multilateral priority document exchange agreement in which a foreign application claiming priority to the instant patent application is filed, access to: (1) the instant patent application-as-filed and its related bibliographic data, (2) any foreign or domestic application to which priority or benefit is claimed by the instant application and its related bibliographic data, and (3) the date of filing of this Authorization. See 37 CFR 1.14(h)(1).

B. Search Results from U.S. Application to EPO - Unless box B in subsection 2 (opt-out of authorization) is checked, the undersigned hereby **grants the USPTO authority** to provide the EPO access to the bibliographic data and search results from the instant patent application when a European patent application claiming priority to the instant patent application is filed. See 37 CFR 1.14(h)(2).

The applicant is reminded that the EPO's Rule 141(1) EPC (European Patent Convention) requires applicants to submit a copy of search results from the instant application without delay in a European patent application that claims priority to the instant application.

2. Opt-Out of Authorizations to Permit Access by a Foreign Intellectual Property Office(s)

☐ A. Applicant **DOES NOT** authorize the USPTO to permit a participating foreign IP office access to the instant application-as-filed. If this box is checked, the USPTO will not be providing a participating foreign IP office with any documents and information identified in subsection 1A above.

☐ B. Applicant **DOES NOT** authorize the USPTO to transmit to the EPO any search results from the instant patent application. If this box is checked, the USPTO will not be providing the EPO with search results from the instant application.

NOTE: Once the application has published or is otherwise publicly available, the USPTO may provide access to the application in accordance with 37 CFR 1.14.

PTO/AIA/14 (11-15)
Approved for use through 04/30/2017. OMB 0651-0032
U.S. Patent and Trademark Office; U.S. DEPARTMENT OF COMMERCE
Under the Paperwork Reduction Act of 1995, no persons are required to respond to a collection of information unless it contains a valid OMB control number.

Application Data Sheet 37 CFR 1.76	Attorney Docket Number	9900-45697US4
	Application Number	
Title of Invention	WIRELESS TERMINALS, NODES OF WIRELESS COMMUNICATION NETWORKS, AND METHODS OF OPERATING THE SAME	

Applicant Information:

Providing assignment information in this section does not substitute for compliance with any requirement of part 3 of Title 37 of CFR to have an assignment recorded by the Office.

Applicant 1 Remove

If the applicant is the inventor (or the remaining joint inventor or inventors under 37 CFR 1.45), this section should not be completed. The information to be provided in this section is the name and address of the legal representative who is the applicant under 37 CFR 1.43; or the name and address of the assignee, person to whom the inventor is under an obligation to assign the invention, or person who otherwise shows sufficient proprietary interest in the matter who is the applicant under 37 CFR 1.46. If the applicant is an applicant under 37 CFR 1.46 (assignee, person to whom the inventor is obligated to assign, or person who otherwise shows sufficient proprietary interest) together with one or more joint inventors, then the joint inventor or inventors who are also the applicant should be identified in this section.

Clear

● Assignee	Legal Representative under 35 U.S.C. 117	Joint Inventor
Person to whom the inventor is obligated to assign.	Person who shows sufficient proprietary interest	

If applicant is the legal representative, indicate the authority to file the patent application, the inventor is:

Name of the Deceased or Legally Incapacitated Inventor:

If the Applicant is an Organization check here. ☒

Organization Name	Telefonaktiebolaget LM Ericsson (publ)		
Mailing Address Information For Applicant:			
Address 1			
Address 2			
City	Stockholm	**State/Province**	
Country	SE	Postal Code	SE-164 83
Phone Number		Fax Number	
Email Address			

Additional Applicant Data may be generated within this form by selecting the Add button. Add

Assignee Information including Non-Applicant Assignee Information:

Providing assignment information in this section does not substitute for compliance with any requirement of part 3 of Title 37 of CFR to have an assignment recorded by the Office.

PTO/AIA/14 (11-15)
Approved for use through 04/30/2017. OMB 0651-0032
U.S. Patent and Trademark Office; U.S. DEPARTMENT OF COMMERCE
Under the Paperwork Reduction Act of 1995, no persons are required to respond to a collection of information unless it contains a valid OMB control number.

Application Data Sheet 37 CFR 1.76	Attorney Docket Number	9900-45697US4
	Application Number	
Title of Invention	WIRELESS TERMINALS, NODES OF WIRELESS COMMUNICATION NETWORKS, AND METHODS OF OPERATING THE SAME	

Assignee 1

Complete this section if assignee information, including non-applicant assignee information, is desired to be included on the patent application publication. An assignee-applicant identified in the "Applicant Information" section will appear on the patent application publication as an applicant. For an assignee-applicant, complete this section only if identification as an assignee is also desired on the patent application publication.

Remove

If the Assignee or Non-Applicant Assignee is an Organization check here. ☐

Prefix	**Given Name**	Middle Name	**Family Name**	Suffix

Mailing Address Information For Assignee including Non-Applicant Assignee:

Address 1			
Address 2			
City		**State/Province**	
Country i		Postal Code	
Phone Number		Fax Number	
Email Address			

Additional Assignee or Non-Applicant Assignee Data may be generated within this form by selecting the Add button. Add

Signature:

Remove

NOTE: This Application Data Sheet must be signed in accordance with 37 CFR 1.33(b). **However, if this Application Data Sheet is submitted with the INITIAL filing of the application and either box A or B is not checked in subsection 2 of the "Authorization or Opt-Out of Authorization to Permit Access" section, then this form must also be signed in accordance with 37 CFR 1.14(c).**

This Application Data Sheet **must** be signed by a patent practitioner if one or more of the applicants is a **juristic entity** (e.g., corporation or association). If the applicant is two or more joint inventors, this form must be signed by a patent practitioner, **all** joint inventors who are the applicant, or one or more joint inventor-applicants who have been given power of attorney (e.g., see USPTO Form PTO/AIA/81) on behalf of **all** joint inventor-applicants.

See 37 CFR 1.4(d) for the manner of making signatures and certifications.

Signature	/Scott C. Hatfield/			Date (YYYY-MM-DD)	2018-11-28
First Name	Scott	Last Name	Hatfield	Registration Number	38176

Additional Signature may be generated within this form by selecting the Add button. Add

PTO/AIA/14 (11-15)
Approved for use through 04/30/2017. OMB 0651-0032
U.S. Patent and Trademark Office; U.S. DEPARTMENT OF COMMERCE
Under the Paperwork Reduction Act of 1995, no persons are required to respond to a collection of information unless it contains a valid OMB control number.

Application Data Sheet 37 CFR 1.76	Attorney Docket Number	9900-45697US4
	Application Number	
Title of Invention	WIRELESS TERMINALS, NODES OF WIRELESS COMMUNICATION NETWORKS, AND METHODS OF OPERATING THE SAME	

This collection of information is required by 37 CFR 1.76. The information is required to obtain or retain a benefit by the public which is to file (and by the USPTO to process) an application. Confidentiality is governed by 35 U.S.C. 122 and 37 CFR 1.14. This collection is estimated to take 23 minutes to complete, including gathering, preparing, and submitting the completed application data sheet form to the USPTO. Time will vary depending upon the individual case. Any comments on the amount of time you require to complete this form and/or suggestions for reducing this burden, should be sent to the Chief Information Officer, U.S. Patent and Trademark Office, U.S. Department of Commerce, P.O. Box 1450, Alexandria, VA 22313-1450. DO NOT SEND FEES OR COMPLETED FORMS TO THIS ADDRESS. **SEND TO: Commissioner for Patents, P.O. Box 1450, Alexandria, VA 22313-1450.**

Privacy Act Statement

The Privacy Act of 1974 (P.L. 93-579) requires that you be given certain information in connection with your submission of the attached form related to a patent application or patent. Accordingly, pursuant to the requirements of the Act, please be advised that: (1) the general authority for the collection of this information is 35 U.S.C. 2(b)(2); (2) furnishing of the information solicited is voluntary; and (3) the principal purpose for which the information is used by the U.S. Patent and Trademark Office is to process and/or examine your submission related to a patent application or patent. If you do not furnish the requested information, the U.S. Patent and Trademark Office may not be able to process and/or examine your submission, which may result in termination of proceedings or abandonment of the application or expiration of the patent.

The information provided by you in this form will be subject to the following routine uses:

1 The information on this form will be treated confidentially to the extent allowed under the Freedom of Information Act (5 U.S.C. 552) and the Privacy Act (5 U.S.C. 552a). Records from this system of records may be disclosed to the Department of Justice to determine whether the Freedom of Information Act requires disclosure of these records.

2. A record from this system of records may be disclosed, as a routine use, in the course of presenting evidence to a court, magistrate, or administrative tribunal, including disclosures to opposing counsel in the course of settlement negotiations.

3 A record in this system of records may be disclosed, as a routine use, to a Member of Congress submitting a request involving an individual, to whom the record pertains, when the individual has requested assistance from the Member with respect to the subject matter of the record.

4. A record in this system of records may be disclosed, as a routine use, to a contractor of the Agency having need for the information in order to perform a contract. Recipients of information shall be required to comply with the requirements of the Privacy Act of 1974, as amended, pursuant to 5 U.S.C. 552a(m).

5. A record related to an International Application filed under the Patent Cooperation Treaty in this system of records may be disclosed, as a routine use, to the International Bureau of the World Intellectual Property Organization, pursuant to the Patent CooperationTreaty.

6. A record in this system of records may be disclosed, as a routine use, to another federal agency for purposes of National Security review (35 U.S.C. 181) and for review pursuant to the Atomic Energy Act (42 U.S.C. 218(c)).

7. A record from this system of records may be disclosed, as a routine use, to the Administrator, General Services, or his/her designee, during an inspection of records conducted by GSA as part of that agency's responsibility to recommend improvements in records management practices and programs, under authority of 44 U.S.C. 2904 and 2906. Such disclosure shall be made in accordance with the GSA regulations governing inspection of records for this purpose, and any other relevant (i.e., GSA or Commerce) directive. Such disclosure shall not be used to make determinations about individuals.

8. A record from this system of records may be disclosed, as a routine use, to the public after either publication of the application pursuant to 35 U.S.C. 122(b) or issuance of a patent pursuant to 35 U.S.C. 151. Further, a record may be disclosed, subject to the limitations of 37 CFR 1.14, as a routine use, to the public if the record was filed in an application which became abandoned or in which the proceedings were terminated and which application is referenced by either a published application, an application open to public inspections or an issued patent.

9. A record from this system of records may be disclosed, as a routine use, to a Federal, State, or local law enforcement agency, if the USPTO becomes aware of a violation or potential violation of law or regulation.

WIRELESS TERMINALS, NODES OF WIRELESS COMMUNICATION NETWORKS, AND METHODS OF OPERATING THE SAME

Cross Reference to Related Applications

This application is a Continuation of U.S. Application No. 15/678,199, filed on August 16, 2017, which is a Continuation of U.S. Application No. 14/911,875, filed on February 12, 2016, which is a 35 U.S.C. § 371 national stage application of PCT International Application No. PCT/SE2015/051191, filed on November 10, 2015, which itself claims priority to U.S. provisional Application No. 62/102,685, filed January 13, 2015 and U.S. provisional Application No. 62/149,899, filed April 20, 2015, the disclosure and content of all of which are incorporated by reference herein in their entireties.

TECHNICAL FIELD

Embodiments disclosed herein may be generally directed to wireless communications and more particularly, directed to medium access control (MAC) control elements (CEs) for wireless communications and related wireless terminals and wireless communication network nodes.

BACKGROUND

The Long Term Evolution (LTE) specifications have been standardized to support Component Carrier (CC) bandwidths up to 20 MHz (which may be the maximal LTE Rel-8 carrier bandwidth). Accordingly, LTE operation with bandwidths wider than 20 MHz may be possible and may appear as a number of LTE carriers to an LTE terminal.

A straightforward way to provide such operation could be by means of Carrier Aggregation (CA). CA implies that an LTE Rel-10 terminal can receive multiple Component Carriers CCs (also referred to as carriers), where each CC has (or at least has the possibility to have) the same structure as a Rel-8 carrier. An example of Carrier Aggregation CA is illustrated in Figure 1.

The LTE standard may support up to 5 aggregated carriers where each carrier is limited in the Radio Frequency RF specifications to have one of six bandwidths, i.e., 6, 15, 25, 50, 75, or 100 Resource Blocks RB (corresponding to 1.4, 3, 5, 10, 15, and 20 MHz respectively).

The number of aggregated Component Carriers CCs as well as the bandwidth of each individual CC may be different for uplink and downlink (generically referred to as wireless

communication links, communication links, or simply links). A symmetric configuration refers to the case where the number of CCs in downlink and uplink is the same whereas an asymmetric configuration refers to the case that the numbers of CCs in downlink and uplink are different. A number of CCs configured in the network may be different from a number of CCs seen by a terminal. A terminal may, for example, support and/or be configured with more downlink CCs than uplink CCs, even though the network offers the same number of uplink and downlink CCs.

During initial access, an LTE CA-capable terminal may behave in a manner similar to a terminal not capable of CA. Upon successful connection to the network, a terminal may (depending on its own capabilities and the network) be configured with additional CCs in the UL and DL. Configuration may be based on Radio Resource Control RRC. Due to the heavy signaling and rather slow speed of RRC signaling, it is envisioned that a terminal may be configured with multiple CCs even though not all of them are currently used. If a terminal is activated on multiple CCs, this would imply that it has to monitor all DownLink DL CCs for PDCCH (Physical DownLink Control CHannel) and PDSCH (Physical DownLink Shared CHannel). This operation may require a wider receiver bandwidth, a higher sampling rate, etc,. resulting in increased power consumption.

In CA, the terminal is configured with a primary Component Carrier CC (or cell or Serving cell), which is referred to as the Primary Cell or PCell. The PCell may be particularly important, for example, because control signaling may be signaled on this cell and/or because the UE may perform monitoring of the radio quality on the PCell. A CA capable terminal can, as explained above, also be configured with additional component carriers (or cells or serving cells) which are referred to as Secondary Cells (SCells).

The terms terminal, wireless terminal, UE (User Equipment), and User Equipment node will be used interchangeably throughout this document.

In LTE, the eNodeB (also referred to as a base station) and the UE use Medium Access (MAC) Control Elements (CE) to exchange information such as buffer status reports, power headroom reports, etc. A comprehensive list of MAC CEs is provided in section 6.1.3 of 3GPP TS 36.321 v12.3.0 (2014-09), "LTE; Evolved Universal Terrestrial Radio Access (E-UTRA); Medium Access Control (MAC) protocol specification." Moreover, each MAC CE may be identified by a LCID (Logical Channel Identity) which is used as an identifier for the MAC CE so that the receiver interprets the MAC CE correctly. With the existing LTE specification, however, a number of component carriers may be limited.

SUMMARY

According to some embodiments of inventive concepts, a method of operating a wireless terminal in communication with a wireless communication network may include configuring a first group of component carriers for a communication link between the wireless terminal and the communication network, and while configured with the first group of component carriers, a first Medium Access Control (MAC) Control Element (CE) may be communicated. The first MAC CE may include a first bit map having a first bit map size with bits of the first bit map corresponding to respective component carriers of the first group of component carriers. A second group of component carriers may be configured for the communication link between the wireless terminal and the communication network with the first group of component carriers being different than the second group of component carriers. While configured with the second group of component carriers, a second MAC CE may be communicated. The second MAC CE may include a second bit map having a second bit map size with bits of the second bit map corresponding to respective component carriers of the second group of component carriers, and the first bit map size of the first bit map may be different than the second bit map size of the second bit map.

According to some other embodiments of inventive concepts, a method of operating a node of a wireless communication network may include configuring a first group of component carriers for a communication link between the node of the communication network and a wireless terminal. While configured with the first group of component carriers for the communication link, a first MAC CE may be communicated over the communication link, with the first MAC CE including a first bit map having a first bit map size with bits of the first bit map corresponding to respective component carriers of the first group of component carriers. A second group of component carriers may be configured for the communication link between the node of the communication network and the wireless terminal, and while configured with the second group of component carriers, a second MAC CE may be communicated over the communication link. The second MAC CE may include a second bit map having a second bit map size with bits of the second bit map corresponding to respective component carriers of the second group of component carriers, and the first bit map size of the first bit map may be different than the second bit map size of the second bit map.

According to still other embodiments of inventive concepts, a wireless terminal may include a transceiver configured to provide radio communications with a wireless communication network over a radio interface, and a processor coupled with the transceiver.

The processor may be configured to configure a first group of component carriers for a communication link between the wireless terminal and the communication network, and to communicate a first MAC CE through the transceiver while configured with the first group of component carriers. The first MAC CE may include a first bit map having a first bit map size with bits of the first bit map corresponding to respective component carriers of the first group of component carriers. The processor may be further configured to configure a second group of component carriers for the communication link between the wireless terminal and the communication network, and to communicate a second MAC CE through the transceiver while configured with the second group of component carriers. The first group of component carriers may be different than the second group of component carriers, the second MAC CE may include a second bit map having a second bit map size with bits of the second bit map corresponding to respective component carriers of the second group of component carriers, and the first bit map size of the first bit map may be different than the second bit map size of the second bit map.

According to yet other embodiments of inventive concepts, a wireless terminal may be adapted to configure a first group of component carriers for a communication link between the wireless terminal and the communication network, and to communicate a first MAC CE while configured with the first group of component carriers. The first MAC CE may include a first bit map having a first bit map size with bits of the first bit map corresponding to respective component carriers of the first group of component carriers. The wireless terminal may be further adapted to configure a second group of component carriers for the communication link between the wireless terminal and the communication network, and to communicate a second MAC CE while configured with the second group of component carriers. The first group of component carriers may be different than the second group of component carriers, the second MAC CE may include a second bit map having a second bit map size with bits of the second bit map corresponding to respective component carriers of the second group of component carriers, and the first bit map size of the first bit map may be different than the second bit map size of the second bit map.

According to some more embodiments of inventive concepts, a node of a wireless communication network may include a transceiver configured to provide communications with one or more wireless terminals over a radio interface, and a processor coupled with the transceiver. The processor may be configured to configure a first group of component carriers for a communication link between the node of the communication network and a wireless terminal, and to communicate a first MAC CE over the communication link while configured

with the first group of component carriers for the communication link. The first MAC CE may include a first bit map having a first bit map size with bits of the first bit map corresponding to respective component carriers of the first group of component carriers. The processor may be further configured to configure a second group of component carriers for the communication link between the node of the communication network and the wireless terminal, and to communicate a second MAC CE over the communication link while configured with the second group of component carriers. The second MAC CE may include a second bit map having a second bit map size with bits of the second bit map corresponding to respective component carriers of the second group of component carriers. Moreover, the first bit map size of the first bit map may be different than the second bit map size of the second bit map.

According to yet more embodiments of inventive concepts, a node of a wireless communication network may be adapted to configure a first group of component carriers for a communication link between the node of the communication network and a wireless terminal. The node may be adapted to communicate a first MAC CE over the communication link while configured with the first group of component carriers for the communication link, with the first MAC CE including a first bit map having a first bit map size with bits of the first bit map corresponding to respective component carriers of the first group of component carriers. The node may also be adapted to configure a second group of component carriers for the communication link between the node of the communication network and the wireless terminal, and to communicate a second MAC CE over the communication link while configured with the second group of component carriers. The second MAC CE may include a second bit map having a second bit map size with bits of the second bit map corresponding to respective component carriers of the second group of component carriers, and the first bit map size of the first bit map may be different than the second bit map size of the second bit map.

By providing Medium Access Control Elements (MAC CEs) with bit maps of different sizes, an efficiency of control signaling may be improved while supporting dynamic configuration of different groups of component carriers for a wireless terminal. For example, bit map sizes of MAC CEs communicated between a wireless terminal and a network node may vary depending on the particular component carriers that are configured for the wireless terminal.

BRIEF DESCRIPTION OF THE DRAWINGS

The accompanying drawings, which are included to provide a further understanding of the disclosure and are incorporated in and constitute a part of the application, illustrate certain non-limiting embodiments of inventive concepts. In the drawings:

Figure 1 is a diagram illustrating carrier aggregation with an aggregated bandwidth of 100 MHz;

Figure 2A is a table illustrating values of logical channel identifications (LCIDs) for an uplink shared channel (UL-SCH) taken from Table 6.2.1-2 of 3GPP TS 36.321 V12.3.0 (2014-09);

Figure 2B is a table illustrating values of logical channel identifications (LCIDs) for a downlink shared channel (DL-SCH) taken from Table 6.2.1-1 of 3GPP TS 36.321 V12.3.0 (2014-09);

Figure 2C is a table illustrating power headroom levels for power headroom reports (PHRs) taken from Table 6.1.3.6-1 of 3GPP TS 36.321 V12.3.0 (2014-09);

Figure 3 is a table illustrating an extended power headroom report (PHR) medium access control (MAC) control element (CE) taken from Table 6.1.3.6a-2 of 3GPP TS 36.321 V12.3.0 (2014-09);

Figure 4 is a table illustrating an extended power headroom report (PHR) medium access control (MAC) control element (CE) for 32 cells according to some embodiments of inventive concepts;

Figure 5 is a table illustrating nominal UE transmit power levels for an extended power headroom report (PHR) taken from Table 6.1.3.6a-1 of 3GPP TS 36.321 V12.3.0 (2014-09);

Figure 6 is a table illustrating an activation/deactivation medium access control (MAC) control element (CE) taken from Table 6.1.3.8-1 of 3GPP TS 36.321 V12.3.0 (2014-09);

Figure 7 is a table illustrating an activation/deactivation medium access control (MAC) control element (CE) for 32 cells according to some embodiments of inventive concepts;

Figure 8 is a table illustrating an extended power headroom report (PHR) medium access control (MAC) control element (CE) according to some embodiments of inventive concepts;

Figure 9 is a table illustrating nominal UE transmit power levels for an extended power headroom report (PHR) taken from Table 6.1.3.6a-1 of 3GPP TS 36.321 V12.3.0 (2014-09);

Figure 10 is a table illustrating an activation/deactivation medium access control (MAC) control element (CE) according to some embodiments of inventive concepts;

Figure 11 is a block diagram illustrating elements in a radio access network (RAN) communicating with wireless terminals (UEs) and with a core network node according to some embodiments of inventive concepts;

Figure 12 is a block diagram illustrating a base station of Figure 11 according to some embodiments of inventive concepts;

Figure 13 is a block diagram illustrating a wireless terminal (UE) of Figure 11 according to some embodiments of inventive concepts;

Figure 14 a block diagram illustrating a core network node of Figure 11 according to some embodiments of inventive concepts;

Figures 15A, 15B, 15C, 16, 17, and 18 are flow charts illustrating operations of terminals/nodes according to some embodiments of inventive concepts;

Figures 19A, 19B, and 19C are flow charts illustrating operations of wireless terminals (UEs) according to some embodiments of inventive concepts;

Figure 20 is a flow chart illustrating operations of a base station (eNB) according to some embodiments of inventive concepts; and

Figures 21A and 21B are tables illustrating medium access control (MAC) control elements (CEs) according to some embodiments of inventive concepts.

DETAILED DESCRIPTION

Inventive concepts will now be described more fully hereinafter with reference to the accompanying drawings, in which examples of embodiments of inventive concepts are shown. Inventive concepts may, however, be embodied in many different forms and should not be construed as limited to the embodiments set forth herein. Rather, these embodiments are provided so that this disclosure will be thorough and complete, and will fully convey the scope of inventive concepts to those skilled in the art. It should also be noted that these embodiments are not mutually exclusive. Components from one embodiment may be tacitly assumed to be present/used in another embodiment.

For purposes of illustration and explanation only, these and other embodiments of inventive concepts are described herein in the context of operating in a RAN (Radio Access Network) that communicates over radio communication channels with wireless terminals (also referred to as UEs). It will be understood, however, that inventive concepts are not limited to such embodiments and may be embodied generally in any type of communication

network. As used herein, a legacy or non-legacy wireless terminal (also referred to as a UE, user equipment node, mobile terminal, wireless device, etc.) can include any device that receives data from and/or transmits data to a communication network, and may include, but is not limited to, a mobile telephone ("cellular" telephone), laptop/portable computer, pocket computer, hand-held computer, an M2M device, IoT (Internet of Things) device, and/or desktop computer.

Note that although terminology from 3GPP (3rd Generation Partnership Project) LTE (Long Term Evolution) has been used in this disclosure to provide examples of embodiments of inventive concepts, this should not be seen as limiting the scope of inventive concepts to only the aforementioned system. Other wireless systems, including WCDMA, WiMax, UMB and GSM, may also benefit from exploiting ideas/concepts covered within this disclosure.

Also, note that terminology such as eNodeB (also referred to as a base station, eNB, etc.) and UE (also referred to as a wireless terminal, mobile terminal, etc.) should be considering non-limiting.

Figure 11 is a block diagram illustrating a Radio Access Network (RAN) according to some embodiments of present inventive concepts. As shown, communications between base stations and one or more core network nodes (e.g., Mobility Management Entity MME or Service GPRS Support Node SGSN) may be provided using respective S1 interfaces. Each base station BS may communicate over a radio interface (including uplinks and downlinks) with respective wireless terminals UEs in a respective cell or cells supported by the base station. By way of example, base station BS-1 is shown in communication with wireless terminals UE-1 and UE-2, base station BS-2 is shown in communication with wireless terminals UE-3 and UE-4, and base station BS-n is shown in communication with wireless terminals UE-5 and UE-6.

Figure 12 is a block diagram illustrating elements of a base station BS of Figure 11. As shown, a base station BS may include a transceiver circuit 201 (also referred to as a transceiver or radio interface or a communication interface) configured to provide radio communications with a plurality of wireless terminals, a network interface circuit 205 (also referred to as a network interface) configured to provide communications with other base stations of the RAN (e.g., over the X2 interface), and a processor circuit 203 (also referred to as a processor) coupled to the transceiver circuit and the network interface circuit, and a memory circuit 207 coupled to the processor circuit. The memory circuit 207 may include computer readable program code that when executed by the processor circuit 203 causes the processor circuit to perform operations according to embodiments disclosed herein.

According to other embodiments, processor circuit 203 may be defined to include memory so that a memory circuit is not separately provided.

Figure 13 is a block diagram illustrating elements of a wireless terminal UE of Figure 11. As shown, a wireless terminal UE may include a transceiver circuit 301 (also referred to as a transceiver) including a transmitter and a receiver configured to provide radio communications with a base station BS, a processor circuit 303 (also referred to as a processor) coupled to the transceiver circuit, and a memory circuit 307 coupled to the processor circuit. The memory circuit 307 may include computer readable program code that when executed by the processor circuit 303 causes the processor circuit to perform operations according to embodiments disclosed herein. According to other embodiments, processor circuit 303 may be defined to include memory so that a memory circuit is not separately provided.

Figure 14 is a block diagram illustrating elements of a core network node (e.g., an MME and/or an SGSN) of Figure 11. As shown, a core network node may include a network interface circuit 401 (also referred to as a network interface or a communication interface) configured to provide communications with base stations of the RAN (e.g., over the S1 interface), a processor circuit 403 (also referred to as a processor) coupled to the network interface circuit, and a memory circuit 407 coupled to the processor circuit. The memory circuit 407 may include computer readable program code that when executed by the processor circuit 403 causes the processor circuit to perform operations according to embodiments disclosed herein. According to other embodiments, processor circuit 403 may be defined to include memory so that a memory circuit is not separately provided.

In Carrier Aggregation CA for LTE, aggregation of a PCell and up to 4 SCells (i.e., for a total of 5 cells) may currently be supported. Many MAC CEs used in CA may, however, be capable of indicating SCell indices up to 7.

As the demand on throughput increases in LTE systems, it may be beneficial to support aggregation of more than 5 cells. The MAC specification, however, has not been designed to support more than five cells or in some cases more than seven cells). For example, it may not be possible to activate a cell which has a cell index higher than index 7. Therefore, the MAC specification may be a bottleneck to potential throughput.

According to some embodiments of inventive concepts, MAC CEs may be extended to support cell indices higher than 7 to provide a signaling efficient and backwards compatible way of extending the support for the number of carriers in the MAC specification.

According to some embodiments of inventive concepts, multiple versions of MAC CEs may support different number of carriers.

According to some embodiments, MAC CEs may be defined in different versions where the different versions support different numbers of carriers. For example, two different versions of the activation/deactivation MAC CE may be defined, with a first version supporting fewer serving cells (e.g., up to 7 or 8 cells) and with a second version supporting more serving cells (e.g., up to 31 or 32 cells). In one alternative of these embodiments, the different versions of the MAC CEs may have the same Logical Channel Identity (LCID). In another alternative of these embodiments, the different versions of the MAC CEs may have different LCIDs.

Transmitter selection of the version of the MAC CE to send will be discussed below.

Even though the following disclosure may discuss embodiments sending MAC CEs between a UE and an eNB (or a network), it should be appreciated that other embodiments may send MAC CEs between any types of nodes in the network (e.g., between two UEs in case of device-to-device communication). For the sake of simplicity, readability, and/or conciseness, however, transmission of MAC CEs between a UE and a network may be discussed by way of example without discussing transmission of such MAC CEs between other nodes in the network.

Selection may be based on network configuration.

The network may configure the version of the MAC CE to be applied (e.g., the network may indicate to the terminal which version of the MAC CE shall be applied).

The transmitter (e.g., the UE or the network base station) may then select which version of the MAC CEs to transmit depending on what the network has configured the UE to use (send and receive). In other words, if the network has configured the UE to use a first version of the MAC CE, then the UE will select the first version, and the network may also send MAC CEs of the first version to the UE since the UE expects the first version.

The MAC CE version may be configured using broadcast signaling (e.g., via a system information block, SIB) which may have the benefit that all terminals (which support the feature) will apply the same version of the MAC CEs without need for per-UE signaling (which may cost unnecessary signaling overhead). According to other embodiments, the MAC CE version may be configured using dedicated signaling, thereby allowing the network to configure different UEs to apply different versions of the MAC CEs.

Selection may be based on a number of configured carriers.

Which version of the MAC CE is used may be determined based on the number of carriers used in the communication between the UE and network. If a UE and network are communicating using fewer than N carriers, then one version of the MAC CE may be applied, while if N or more carriers are used, another version of the MAC CE may be applied, wherein N is a threshold number of carriers.

In one alternative of this selection mechanism, which version of the MAC CE is used may be determined based on the index of the cell with the highest index which the UE is configured with. If all cells the UE is configured with have an index lower than N, then one version of the MAC CE may be applied, otherwise another version of the MAC CE may be applied.

According to some embodiments, for example, if less than 8 carriers are used, a MAC CE version may be selected which can contain information/indications/etc. about up to 8 (or 7) carriers (i.e. a "non-extended MAC CE version"). If more than 8 carriers are configured, a MAC CE version which can contain information/indications/etc. up to about 32 (or 31) carriers may be selected (i.e. an "extended MAC CE version"). This selection mechanism can be generalized so that multiple levels are used:

- if 1 to N_1 carriers are used, a first MAC CE version is applied;
- if N_1+1 to N_2 carriers are used, a second MAC CE version is applied;
- if N_2+1 to N_3 carriers are used, a third MAC CE version is applied;
- …
- if N_{n-1} + 1 to N_n carriers are used, an nth MAC CE version is applied.

Both the network and the UE are aware of the number of carriers (or cells) that are configured for the UE and the indices of the carriers. Accordingly, there may be no need for explicit coordination (e.g., signaling) to determine which MAC CE version should be used.

Examples of multiple versions of MAC CEs depending on the number of configured carriers for the terminal are discussed below.

Examples of how two different versions of a MAC CE are used and how the MAC CE versions are selected based on the number of carriers (or cells or serving cells) the UE is configured with will be discussed below. The examples show how this can be implemented in the LTE MAC specification (TS 36.321 V12.3.0).

An extended power headroom reporting MAC CE is discussed according to some embodiments.

According to some embodiments discussed below, the UE may apply one version of the Extended Power Headroom Report MAC Control Element if the UE has no cell

configured with a ServCellIndex or SCellIndex (also referred to as a secondary cell index, an SCell index, or a serving cell index) higher than 7, and another version otherwise.

The Extended Power Headroom Report (PHR) MAC control element CE is identified by a MAC PDU (Protocol Data Unit) subheader with LCID (Logical Channel Identity) as specified in the table of Figure 2A (Table 6.2.1-2 of 3GPP TS 36.321 V12.3.0). The Extended PHR MAC CE may have a variable size and may be defined as shown in the table of Figure 3 (Figure 6.1.3.6a-2 of 3GPP TS 36.321 V12.3.0) and in Figure 4.

As shown in Figure 3, a first version of the PHR MAC CE may include an 8 bit (1 octet) bit map (also referred to as C-fields) including a plurality of C bits to support one primary component carrier and up to 7 configured secondary component carriers (having secondary component carrier indices 1 to 7). Because a primary component carrier must always be configured and activated and every PHR MAC CE will include a Type 1 report for the primary component carrier, a first bit of the bit map may be reserved R. Each C bit (e.g., C_1 to C_7) corresponds to a possible component carrier index for a respective secondary component carrier (e.g., C_1 for a second component carrier identified by index 1, C_2 for a secondary component carrier identified by index 2, …, C_7 for secondary component carrier identified by index 7. As long as none of the configured secondary component carriers has a component carrier index greater than 7, the first version of the PHR MAC CE may be used. According to some embodiments, secondary component carriers may be configured with non-sequential secondary component carrier indices. For example, three secondary component carriers with indices 1, 3, and 5 may be configured for a wireless terminal so that C bits C_2, C_4, C_6, and C_7 are 0 (for non-configured secondary component carriers), so that each of C bits C_1, C_3, and C_5 is 0 if power headroom is not reported for the secondary component carrier or 1 if power headroom is reported for the secondary component carrier.

As shown in Figure 4, a second version of the PHR MAC CE may include a 32 bit (4 octet) bit map (also referred to as C-fields) to support one primary component carrier and up to 31 configured secondary component carriers (having secondary component carrier indices 1 to 31). Because a primary component carrier must always be configured and activated and every PHR MAC CE will include a Type 1 report for the primary component carrier, a first bit of the bit map may be reserved R. Each C bit (e.g., C_1 to C_{31}) corresponds to a possible component carrier index for a respective secondary component carrier (e.g., C_1 for a second component carrier identified by index 1, C_2 for a secondary component carrier identified by index 2, …, C_{31} for secondary component carrier identified by index 31.

The second version of the PHR MAC CE may be used any time at least one of the secondary component carriers has a component carrier index greater than 7. According to some embodiments, secondary component carriers may be configured with non-sequential secondary component carrier indices. For example, three secondary component carriers with indices 1, 3, and 13 may be configured for a wireless terminal so that C bits C_2, C_4-C_{12}, and C_{14}-C_{31} are 0 (for non-configured secondary component carriers), so that each of C bits C_1, C_3, and C_{13} is 0 if power headroom is not reported for the secondary component carrier or 1 if power headroom is reported for the secondary component carrier.

By only using the second version of the PHR MAC CE of Figure 4 when a highest secondary component carrier index for a configured secondary component carrier exceeds a threshold (e.g., a highest secondary component carrier for a configured secondary component carrier is greater than 7), the smaller PHR MAC CE can be used when the highest configured component carrier index does not exceed the threshold, thereby reducing signaling overhead.

If the UE is configured with at least one cell with a ServCellIndex larger than 7, the definition in Figure 4 may/will be used. Otherwise (if the UE is not configured with at least one cell with a ServCellIndex larger than 7), the definition in Figure 3 may/will be used. When Type 2 PH is reported, the octet containing the Type 2 PH field is included first after the octet indicating the presence of PH per SCell and is followed by an octet containing the associated $P_{CMAX,c}$ field (if reported). Then follows in ascending order based on the ServCellIndex [3GPP TS 36.331: "Evolved Universal Terrestrial Radio Access (E-UTRA); Radio Resource Control (RRC); Protocol specification"] an octet with the Type 1 PH field and an octet with the associated $P_{CMAX,c}$ field (if reported), for the PCell and for each SCell indicated in the bitmap.

The Extended PHR MAC Control Element may be defined as follows:

- C_i: this field indicates the presence of a PH field for the SCell with SCellIndex i as specified in [3GPP TS 36.331: "Evolved Universal Terrestrial Radio Access (E-UTRA); Radio Resource Control (RRC); Protocol specification"]. The C_i field set to "1" indicates that a PH field for the SCell with SCellIndex i is reported. The C_i field set to "0" indicates that a PH field for the SCell with SCellIndex i is not reported;
- R: reserved bit, set to "0";
- V: this field indicates if the PH value is based on a real transmission or a reference format. For Type 1 PH, V=0 indicates real transmission on PUSCH and V=1 indicates that a PUSCH reference format is used. For Type 2 PH, V=0 indicates real transmission on PUCCH and V=1 indicates that a PUCCH reference format is used.

Furthermore, for both Type 1 and Type 2 PH, V=0 indicates the presence of the octet containing the associated $P_{CMAX,c}$ field, and V=1 indicates that the octet containing the associated $P_{CMAX,c}$ field is omitted;

- Power Headroom (PH): this field indicates the power headroom level. The length of the field is 6 bits. The reported PH and the corresponding power headroom levels are shown in the table of Figure 2C (Table 6.1.3.6-1 of 3GPP TS 36.321 V12.3.0) (the corresponding measured values in dB can be found in subclause 9.1.8.4 of 3GPP TS 36.133: "Evolved Universal Terrestrial Radio Access (E-UTRA); Requirements for support of radio resource management");

- P: this field indicates whether the UE applies power backoff due to power management (as allowed by P-MPRc [3GPP TS 36.101: "Evolved Universal Terrestrial Radio Access (E-UTRA); User Equipment (UE) radio transmission and reception"]). The UE shall set P=1 if the corresponding $P_{CMAX,c}$ field would have had a different value if no power backoff due to power management had been applied;

- $P_{CMAX,c}$: if present, this field indicates the $P_{CMAX,c}$ or $\acute{P}_{CMAX,c}$ [3GPP TR 36.213: "Evolved Universal Terrestrial Radio Access (E-UTRA); Physical Layer Procedures"] used for calculation of the preceding PH field. The reported $P_{CMAX,c}$ and the corresponding nominal UE transmit power levels are shown in Figure 5 (Table 6.1.3.6a-1 of 3GPP TS 36.321 V12.3.0) (the corresponding measured values in dBm can be found in subclause 9.6.1 of 3GPP TS 36.133: "Evolved Universal Terrestrial Radio Access (E-UTRA); Requirements for support of radio resource management").

Figure 5 (Table 6.1.3.6a-1 of 3GPP TS 36.321 V12.3.0) is a table illustrating Nominal UE transmit power levels for Extended PHR.

In embodiments discussed below, two Activation/Deactivation MAC Control Element versions may be defined. One version may be provided for the case when the UE has no cell configured with a ServCellIndex (also referred to as a secondary component carrier index or SCellIndex) higher than 7, and another version may be provided otherwise.

The Activation/Deactivation MAC control element is identified by a MAC PDU subheader with LCID as specified in table of Figure 2B (Table 6.2.1-1 of 3GPP TS 36.321 V12.3.0 (2014-09)). It has a fixed size and consists of a single octet containing seven C-fields and one R-field. The Activation/Deactivation MAC control element is discussed below with respect to a first version illustrated in Figure 6 (Table 6.1.3.8-1 of 3GPP TS 36.321 V12.3.0 (2014-09)) and a second version illustrated in Figure 7. If the UE is configured with at least

one cell with a ServCellIndex larger than 7, the definition in Figure 7 may/will be used. Otherwise the definition of Figure 6 may/will be used.

As shown in Figure 6, a first version of the Activation/Deactivation MAC CE may include an 8 bit (1 octet) bit map (also referred to as C-fields) to support one primary component carrier and up to 7 configured secondary component carriers (having secondary component carrier indices 1 to 7). Because a primary component carrier must always be configured and activated, a first bit of the bit map may be reserved R. Each C bit (e.g., C_1 to C_7) corresponds to a possible component carrier index for a respective secondary component carrier (e.g., C_1 for a second component carrier identified by index 1, C_2 for a secondary component carrier identified by index 2, …, C_7 for secondary component carrier identified by index 7. As long as none of the configured secondary component carriers has a component carrier index greater than 7, the first version of the Activation/Deactivation MAC CE may be used. According to some embodiments, secondary component carriers may be configured with non-sequential secondary component carrier indices. For example, three secondary component carriers with indices 1, 3, and 5 may be configured for a wireless terminal so that C bits C_2, C_4, C_6, and C_7 are 0 (for non-configured secondary component carriers), so that each of C bits C_1, C_3, and C_5 is 0 if the respective secondary component carrier is to be deactivated or 1 if the secondary component carrier is to be activated.

As shown in Figure 7, a second version of the Activation/Deactivation MAC CE may include a 32 bit (4 octet) bit map (also referred to as C-fields) to support one primary component carrier and up to 31 configured secondary component carriers (having secondary component carrier indices 1 to 31). Because a primary component carrier must always be configured and activated, a first bit of the bit map may be reserved R. Each C bit (e.g., C_1 to C_{31}) corresponds to a possible component carrier index for a respective secondary component carrier (e.g., C_1 for a second component carrier identified by index 1, C_2 for a secondary component carrier identified by index 2, …, C_{31} for secondary component carrier identified by index 31. The second version of the Activation/Deactivation MAC CE may be used any time at least one of the secondary component carriers has a component carrier index greater than 7. According to some embodiments, secondary component carriers may be configured with non-sequential secondary component carrier indices. For example, three secondary component carriers with indices 1, 3, and 13 may be configured for a wireless terminal so that C bits C_2, C_4-C_{12}, and C_{14}-C_{31} are 0 (for non-configured secondary component carriers), so that each of C bits C_1, C_3, and C_{13} is 0 if the secondary component carrier is to be deactivated or 1 if the secondary component carrier is to be activated.

By only using the second version of the Activation/Deactivation MAC CE of Figure 7 when a highest secondary component carrier index for a configured secondary component carrier exceeds a threshold (e.g., a highest secondary component carrier for a configured secondary component carrier is greater than 7), the smaller Activation/Deactivation MAC CE can be used when the highest configured component carrier index does not exceed the threshold, thereby reducing signaling overhead.

Definitions of elements of Figures 6 and 7 are provided as follows:

- C_i: if there is an SCell configured with SCellIndex i as specified in [3GPP TS 36.331: "Evolved Universal Terrestrial Radio Access (E-UTRA); Radio Resource Control (RRC); Protocol specification"], this field indicates the activation/deactivation status of the SCell with SCellIndex i , else the UE shall ignore the C_i field. The C_i field is set to "1" to indicate that the SCell with SCellIndex i shall be activated. The C_i field is set to "0" to indicate that the SCell with SCellIndex i shall be deactivated;
- R: Reserved bit, set to "0".

According to some other embodiments, the same MAC CE (or "MAC CE version" if the wording from embodiments discussed above should be used) is applied regardless of the number of carriers which are used/signaled/indicated. The same LCID is therefore also used. However, the size of the MAC CE may change based on the number of carriers, or more specifically, a number of bits (and therefore maybe also the number of octets) used to indicate cells may change dynamically based on a number of carriers which is used.

This can be implemented by changing the number of octets used to refer to serving cells in the MAC CE (i.e., the bit map or C-fields). For example, if all serving cells the UE is configured with have indices lower than 7 (or 8) only one octet is needed, but if the UE is configured with at least one cell with an index higher than 7 but lower than 15, two octets are needed. More generally, the number of octets used will be a ceiling((index+1)/8) where index is the highest serving cell index (or secondary cell index) the UE is configured with. And ceiling(x) is a function providing the closest highest integer value of x. (Note that if the lowest index is 1, the "+1" in the formula may not be needed).

The difference between this embodiment and embodiments discussed above with the selection mechanism based on number of configured carriers is that with this embodiment, the number of bits used to indicate carriers may be reduced and/or kept at a minimum. Consider, for example, the case when the UE is configured with a serving cell with index 9. According to this embodiment, only two octets will be used to indicate cells. In embodiments

described above with the selection mechanism based on number of configured carriers, the UE will apply the extended MAC CE version which may use 4 octets to indicate cells. Hence this embodiment may be more signaling efficient.

According to some embodiments of inventive concepts, MAC CEs may have dynamic size with the size depending on the number of configured carriers for the terminal.

In embodiments discussed below, a MAC CE may be used in which, depending on the number of serving cells which are used, the number of C-fields (fields used to indicate SCell indices) changes depending on the highest cell index that the UE is configured with.

The Extended Power Headroom Report (PHR) MAC control element is identified by a MAC PDU subheader with LCID as specified in Figure 2A. It has a variable size and is defined in Figure 3. When Type 2 PH is reported, the octet containing the Type 2 PH field is included first after the octet(s) indicating the presence of PH per SCell and followed by an octet containing the associated $P_{CMAX,c}$ field (if reported). The UE shall include enough octet(s) for indicating presence of PH per SCell, such that the configured SCell with the highest index can be indicated. Then follows in ascending order based on the ServCellIndex [3GPP TS 36.331: "Evolved Universal Terrestrial Radio Access (E-UTRA); Radio Resource Control (RRC); Protocol specification"] an octet with the Type 1 PH field and an octet with the associated $P_{CMAX,c}$ field (if reported), for the PCell and for each SCell indicated in the bitmap.

The Extended PHR MAC Control Element is defined as follows:

- C_i: this field indicates the presence of a PH field for the SCell with SCellIndex i as specified in [3GPP TS 36.331: "Evolved Universal Terrestrial Radio Access (E-UTRA); Radio Resource Control (RRC); Protocol specification".]. The C_i field set to "1" indicates that a PH field for the SCell with SCellIndex i is reported. The C_i field set to "0" indicates that a PH field for the SCell with SCellIndex i is not reported;
- R: reserved bit, set to "0";
- V: this field indicates if the PH value is based on a real transmission or a reference format. For Type 1 PH, V=0 indicates real transmission on PUSCH and V=1 indicates that a PUSCH reference format is used. For Type 2 PH, V=0 indicates real transmission on PUCCH and V=1 indicates that a PUCCH reference format is used. Furthermore, for both Type 1 and Type 2 PH, V=0 indicates the presence of the octet containing the associated $P_{CMAX,c}$ field, and V=1 indicates that the octet containing the associated $P_{CMAX,c}$ field is omitted;

- Power Headroom (PH): this field indicates the power headroom level. The length of the field is 6 bits. The reported PH and the corresponding power headroom levels are shown in the table of Figure 2C (Table 6.1.3.6-1 of 3GPP 36.321 V12.3.0) (the corresponding measured values in dB can be found in subclause 9.1.8.4 of [3GPP TS 36.133: "Evolved Universal Terrestrial Radio Access (E-UTRA); Requirements for support of radio resource management"]);
- P: this field indicates whether the UE applies power backoff due to power management (as allowed by $P\text{-}MPR_c$ [3GPP TS 36.101: "Evolved Universal Terrestrial Radio Access (E-UTRA); User Equipment (UE) radio transmission and reception"]). The UE shall set P=1 if the corresponding $P_{CMAX,c}$ field would have had a different value if no power backoff due to power management had been applied;
- $P_{CMAX,c}$: if present, this field indicates the $P_{CMAX,c}$ or $\acute{P}_{CMAX,c}$ [3GPP TR 36.213: "Evolved Universal Terrestrial Radio Access (E-UTRA); Physical Layer Procedures"] used for calculation of the preceding PH field. The reported $P_{CMAX,c}$ and the corresponding nominal UE transmit power levels are shown in the table of Figure 5 (Table 6.1.3.6a-1 of 3GPP TS 36.321 V12.3.0) (the corresponding measured values in dBm can be found in subclause 9.6.1 of [3GPP TS 36.133: "Evolved Universal Terrestrial Radio Access (E-UTRA); Requirements for support of radio resource management"]).

Figure 8 illustrates an Extended PHR MAC Control Element according to some embodiments of inventive concepts.

The table of Figure 9 (Table 6.1.3.6a-1 of 3GPP TS 36.321 V12.3.0) illustrates Nominal UE transmit power levels for Extended PHR.

In embodiments discussed below, a MAC CE is used in which, depending on the number of serving cells which is/are used, the number of octets with C-fields (fields used to indicate SCell indices) changes depending on what the highest cell index the UE is configured with.

The Activation/Deactivation MAC control element is identified by a MAC PDU subheader with LCID as specified in the table of Figure 2B. It has a dynamic size and includes one or more octet(s) containing up to 32 C-fields and one R-field. The Activation/Deactivation MAC control element is defined as discussed with respect to Figure 10. The number of octet(s) shall be such that it is sufficient to indicate activation/deactivation status of the SCell with the highest SCellIndex.

- C_i: if there is an SCell configured with SCellIndex i as specified in [3GPP TS 36.331: "Evolved Universal Terrestrial Radio Access (E-UTRA); Radio Resource Control (RRC); Protocol specification"], this field indicates the activation/deactivation status of the SCell with SCellIndex i , else the UE shall ignore the C_i field. The C_i field is set to "1" to indicate that the SCell with SCellIndex i shall be activated. The C_i field is set to "0" to indicate that the SCell with SCellIndex i shall be deactivated;

- R: Reserved bit, set to "0".

Figure 10 illustrates an Activation/Deactivation MAC control element according to some embodiments of inventive concepts.

According to some embodiments, the transmitter may send a set/list of MAC CEs of a certain type wherein each MAC CE in the list has the capacity to address few cells, but together the set/list of MAC CEs of the same type will address more cells. Stated in other words, the first MAC CE in the list may address a first set of cells, the second MAC CE in the list may address a second set of cells, the third MAC CE in the list may address a third set of cells, and so on. Stated in other words, concatenation of MAC CEs may be used.

Consider for example that the network should send activation/deactivation-commands to the UE and each activation/deactivation MAC CE can address 8 (or 7) cells. If in total 32 cells shall be addressed, the network would then send four activation/deactivation MAC CEs where:

- the first activation/deactivation MAC CE addresses cells with index 0-7 (or 1-7);
- the second activation/deactivation MAC CE addresses cells with index 8-15;
- the third activation/deactivation MAC CE addresses cells with index 16-23; and
- the fourth activation/deactivation MAC CE addresses cells with index 24-31.

The order could also be reversed such that:

- the first activation/deactivation MAC CE addresses cells with index 24-31;
- the second activation/deactivation MAC CE addresses cells with index 16-23;
- the third activation/deactivation MAC CE addresses cells with index 8-15; and
- the fourth activation/deactivation MAC CE addresses cells with index 0-7 (or 1-7).

In this embodiment, it could be so that the MAC CEs must be signaled in the same block of messages (e.g., a same MAC PDU). The UE may reject the set of MAC CEs (or apply another behavior) if the number of MAC CEs in a MAC PDU are too few in order to be able to address all configured service cells of the UE, e.g., if the UE is configured with service cells with indices 0 (e.g., the PCell), 3, 4, and 18, three MAC CEs may be needed to address service cells with indices up to 18. Similarly, the UE may reject the set of MAC CEs (or

apply another behavior) if the number of MAC CEs in a MAC PDU are too many and hence addressing more cells than the UE is configured with.

According to some embodiments of inventive concepts, different versions of MAC CEs are introduced where the different versions support different number of carriers. According to some other embodiments of inventive concepts, dynamic MAC CEs are introduced which can dynamically change the number of supported carriers which can be indicated. According to still other embodiments of inventive concepts, multiple MAC CEs of a certain type are concatenated/sent at the same time where each MAC CE can address few cells but together the multiple MAC CEs can address more cells.

Operations of wireless terminal UE according to some embodiments will now be discussed with respect to the flowchart of Figures 15A, 15B, and 15C. At block 1501, wireless terminal UE processor 303 may determine if a change of component carriers should occur, for example, based on instructions received from base station BS through transceiver 301. If a change in component carrier configuration should occur at block 1501, processor 303 may configure the component carriers at block 1503, and MAC CEs may be communicated with base station BS in accordance with the configured CCs at block 1505.

The configured CCs for wireless terminal UE may include a primary CC and zero, one, or a plurality of secondary CCs, and a secondary component carrier index may be associated with each secondary component carrier as discussed above. Moreover, each PHR or Activation/Deactivation MAC CE may include a bit map with each secondary component carrier index of the configured secondary component carriers being associated with a respective bit of the bit map. As discussed above with respect to Figures 3 and 4, Figures 6 and 7, and Figures 8 and 10, a size of the MAC CE bit map may change to accommodate a highest secondary component carrier index of the configured component carriers.

Accordingly, processor 301 may configure a first group of component carriers for a communication link between wireless terminal UE and a base station BS of the communication network at block 1503. While configured with the first group of component carriers (e.g., until there is a change in CC configuration at block 1501), processor 301 may communicate a first Medium Access Control (MAC) Control Element (CE) at block 1505 (e.g., a PHR MAC CE or an Activation/Deactivation MAC CE), with the first MAC CE including a first bit map having a first size with bits of the first bit map corresponding to respective component carriers of the first group of component carriers. As indicated by the loop from block 1505 to block 1501 and back to block 1505 (bypassing block 1503) any

number of MAC CEs may be communicated while configured with the first group of component carriers.

Responsive to a change in CC configuration at block 1501, processor 301 may configure a second group of component carriers for the communication link between the wireless terminal and the base station BS of the communication network, with the second group of component carriers being different than the first group of component carriers. While configured with the second group of component carriers (e.g., until there is another change in CC configuration at block 1501), processor 301 may communicate a second MAC CE at block 1505 (e.g., a PHR MAC CE or an Activation/Deactivation MAC CE), with the second MAC CE including a second bit map having a second size with bits of the second bit map corresponding to respective component carriers of the second group of component carriers. Moreover, sizes of the first and second bit maps may be different to accommodate the different groups of configured component carriers. As indicated by the loop from block 1505 to block 1501 and back to block 1505 (bypassing block 1503) any number of MAC CEs may be communicated while configured with the second group of component carriers.

As used herein, a group of component carriers for a wireless terminal UE may include a primary component carrier and zero, one, or a plurality of secondary component carriers, and each secondary component carrier may be identified using a secondary component carrier index that is associated with a respective bit (e.g., a C-bit) of the bit map included in a MAC CE (e.g., a bit map of a PHR MAC CE or an Activation/Deactivation MAC CE). Two different groups of component carriers for a same wireless terminal UE (e.g., the first and second groups of component carriers discussed above with respect to block 1501) may thus include a same primary component carrier with at least one of the groups including at least one secondary component carrier that is not included in the other group. For example, a first group of component carriers may include the primary CC and two secondary CCs with respective indices associated with C-bits C_2 and C_4 (so that a one octet bit map of Figures 3, 6, 8, or 10 may be used with the first group), and the second group of CCs may include the primary CC and three secondary CCs with respective indices associated with C-bits C_2, C_4, and C_{12} (so that a multiple/2 octet bit map of Figures 4, 7, 8, or 10 may be used for the second group). Different groups of CCs for a wireless terminal may thus share some of the same primary and/or secondary CCs. Moreover, sizes of different groups of CCs for a wireless terminal may be the same (i.e., having a same number of component carriers), but different highest secondary CC indices for the two groups may result in MAC CE bit maps of different sizes. For example, a first group of component carriers may include the primary CC and two

secondary CCs with respective indices associated with C-bits C_2 and C_4 (so that a one octet bit map of Figures 3, 6, 8, or 10 may be used with the first group), and the second group of CCs may include the primary CC and two secondary CCs with respective indices associated with C-bits C_2 and C_{12} (so that a multiple/2 octet bit map of Figures 4, 7, 8, or 10 may be used for the second group).

Accordingly, configuring the first group of component carriers may thus include configuring a primary component carrier and a first group of secondary component carriers, configuring the second group of component carriers may include configuring a primary component carrier and a second group of secondary component carriers, the first and second groups of secondary component carriers may be different, each of the first group of secondary component carriers may correspond to a respective bit of the first bit map, and each of the second group of secondary component carriers may correspond to a respective bit of the second bit map. Moreover, a respective component carrier index may be associated with each secondary component carrier of the first group, a respective component carrier index may be associated with each secondary component carrier of the second group, at least one of the component carrier indices of the secondary component carriers of the first group may exceed a threshold, none of the component carrier indices of the secondary component carriers of the second group may exceed the threshold, and the size of the first bit map may be greater than the size of the second bit map.

If a MAC CE of block 1505 is a PHR MAC CE, communicating the PHR MAC CE may include transmitting (through transceiver 301) a power headroom report for at least one of the configured CCs at block 1505' of Figure 15B.

If a MAC CE of block 1505 is an Activation/Deactivation MAC CE, communicating the Activation/Deactivation MAC CE may include receiving (through transceiver 301) the Activation/Deactivation MAC CE at block 1505a" and activating/deactivating each component carrier of the first group of component carriers responsive to the first bit map at block 1505b".

According to some embodiments, different Logical Channel Identities (LCID) may be used for different MAC CEs of the same type having different bit map sizes (e.g., different PHR MAC CEs having different bit map sizes or different Activation/Deactivation MAC CEs having different bit map sizes). For example, communicating a first MAC CE at block 1505 may include receiving the first MAC CE and applying bits of the first bit map to respective component carriers of a first group of component carriers responsive to a first LCID, and communicating a second MAC CE may include receiving the second MAC CE and applying

bits of the second bit map to respective component carriers of a second group of component carriers responsive to a second LCID (different than the first LCID). According to another example, communicating a first MAC CE at block 1505 may include transmitting the first MAC CE with a first LCID to indicate that bits of the first bit map apply to respective component carriers of a first group of component carriers, and communicating a second MAC CE may include transmitting the second MAC CE with a second LCID (different than the first LCID) to indicate that bits of the second bit map apply to respective component carriers of a second group of component carriers.

According to other embodiments, the same LCID may be provided for different MAC CEs of a same type having different bit map sizes. In such cases, processor 303 may determine the appropriate bit map size based on the current configuration of component carriers. For example, communicating the first MAC CE at block 1505 may include interpreting/generating the first MAC CE to include the first bit map having the first size responsive to the first group of component carriers configured for the communication link, and communicating the second MAC CE at block 1505 may include interpreting/generating the second MAC CE to include the second bit map having the second size responsive to the second group of component carriers configured for the communication link.

According to some other embodiments of inventive concepts, one or more MAC CEs of a same type (e.g., one or more PHR MAC CEs, or one or more Activation/Deactivation MAC CEs) and having a same bit map size (e.g., one octet) may be used for a same group of component carriers to accommodate different CC configurations, and the one or more MAC CEs for a same group of CCs may be included in a same MAC PDU. For a power headroom report PHR, for example, if indices of the group of configured CCs can be accommodated in a one octet bit map, one PHR MAC CE of Figure 3 may be included in the MAC PDU for the power headroom report. If indices of the group of configured CCs cannot be accommodated in a one octet bit map, two or more PHR MAC CEs of Figure 3 may be included in the MAC PDU for the power headroom report. For an Activation/Deactivation instruction, for example, if indices of the group of configured CCs can be accommodated in a one octet bit map, one Activation/Deactivation MAC CE of Figure 6 may be included in the MAC PDU for the Activation/Deactivation instruction. If indices of the group of configured CCs cannot be accommodated in a one octet bit map, two or more Activation/Deactivation MAC CEs of Figure 6 may be included in the MAC PDU for the Activation/Deactivation instruction.

As illustrated in the flowchart of Figure 16, wireless terminal UE processor 303 may determine if a change of component carriers should occur at block 1601, for example, based

on instructions received from base station BS through transceiver 301. If a change in component carrier configuration should occur at block 1601, processor 303 may configure the component carriers at block 1603, and MAC CEs may be communicated with base station BS in accordance with the configured CCs at block 1605.

Accordingly, processor 303 may initially configure a first group of component carriers for a communication link between the wireless terminal and the communication network at block 1603. While configured with the first group of component carriers, processor 303 may communicate (e.g., transmit and/or receive through transceiver 301) first and second Medium Access Control (MAC) Control Elements (CEs). The first MAC CE may include a first bit map with bits of the first bit map corresponding to respective component carriers of a first sub-set of the group of component carriers, and the second MAC CE may include a second bit map with bits of the second bit map corresponding to respective component carriers of a second sub-set of the group of component carriers. The first and second MAC CEs, for example, may be first and second PHR MAC CEs of Figure 3, or the first and second MAC CEs may be first and second Activation/Deactivation MAC CEs of Figure 6, and the first and second MAC CEs may be included in a same MAC PDU.

As long as the configuration of CCs remains unchanged at block 1601, processor 303 may loop through operations of blocks 1601 and 1605 using multiple MAC CEs in a MAC PDU with one MAC CE of the PDU providing information for a first sub-set of the configured CCs and another MAC CE of the PDU providing information for a second sub-set of the configured CCs, with the first and second sub-sets being mutually exclusive.

If there is a change in CC configuration at block 1601, processor 303 may configure a second group of component carriers for a communication link between the wireless terminal and the communication network at block 1603, with the second group of component carriers being different than the first group of component carriers. For example, a one octet bit map may be sufficient to accommodate indices of the second group of carriers. While configured with the second group of component carriers, processor 303 may communicate a third MAC CE (through transceiver 301), with the third MAC CE including a third bit map with bits of the third bit map corresponding to respective component carriers of the second group of component carriers. Moreover, the third MAC CE may be included in a second MAC PDU different than the MAC PDU used for the first and second MAC CEs discussed above with respect to block 1605.

The first, second, and third bit maps (of the first, second, and third MAC CEs discussed above with respect to block 1605) may have a same size. Moreover, the first group

of component carriers may include a primary component carrier and a first plurality of secondary component carriers, each of the first sub-set of the first plurality of secondary component carriers may be correspond to a respective bit (C-bit) of the first bit map, and each of the second sub-set of the first plurality of secondary component carriers may correspond to a respective bit (C-bit) of the second bit map. In addition, the second group of component carriers may include the primary component carrier and a second plurality of secondary component carriers, with each of the plurality of secondary component carriers corresponding to a respective one of the bits of the third bit map.

Figure 17 illustrates operations of base station BS according to some embodiments of inventive concepts corresponding to wireless terminal operations of Figure 15A. Processor 203 may determine whether a change in CC configuration is appropriate for wireless terminal UE at block 1701, and if so, processor 203 may configure component carriers CCs for wireless terminal UE at block 1703 by transmitting (through transceiver 201) instructions for the CC configuration to wireless terminal UE. At block 1705, processor 203 may communicate MAC CEs with wireless terminal UE for the configured CCs (e.g., transmit Activation/Deactivation MAC CEs and/or receive PHR MAC CEs).

At block 1703, for example, processor 203 may configure a first group of component carriers for a communication link between the node of the communication network and a wireless terminal (e.g., by transmitting a CC configuration instruction to wireless terminal UE through transceiver 201). While configured with the first group of component carriers for the communication link, processor 203 may communicate a first Medium Access Control (MAC) Control Element (CE) (e.g., transmit an Activation/Deactivation MAC CE or receive a PHR MAC CE) over the communication link at block 1705 with wireless terminal UE, with the first MAC CE including a first bit map having a first size (e.g., no more than one octet) with bits of the first bit map corresponding to respective component carriers of the first group of component carriers. Any number of MAC CEs may be transmitted/received for the first group of component carriers at block 1705 until the CC configuration changes at blocks 1701 and 1703.

Responsive to determining that the CC configuration of wireless terminal UE should change at block 1701, processor 203 may configure a second group of component carriers for the communication link between the node of the communication network and the wireless terminal. While configured with the second group of component carriers, processor 203 may communicate a second MAC CE over the communication link, with the second MAC CE including a second bit map having a second size (e.g., more than one octet), with bits of the

second bit map corresponding to respective component carriers of the second group of component carriers, and with the first size of the first bit map being different than the second size of the second bit map. Groups of component carriers are discussed in greater detail above with respect to Figures 15A, 15B, and 15C.

According to some embodiments, communicating at block 1705 the first MAC CE may include receiving a first Extended Power Head Room, PHR, MAC CE (through transceiver 201), and communicating the second MAC CE at block 1705 may include receiving a second Extended PHR MAC CE (through transceiver 201).

According to some embodiments, communicating the first MAC CE at block 1705 may include transmitting a first Activation/Deactivation MAC CE, and communicating the second MAC CE may include transmitting a second Activation/Deactivation MAC CE. For example, communicating the first MAC CE may include transmitting the first Activation/Deactivation MAC CE to activate/deactivate each component carrier of the first group of component carriers in accordance with the first bit map, and communicating the second MAC CE may include transmitting the second Activation/Deactivation MAC CE to activate/deactivate each component carrier of the second group of component carriers in accordance with the second bit map.

According to some embodiments, a first Logical Channel Identity (LCID) may be provided for the first MAC CE, a second LCID may provided for the second MAC CE, and the first and second LCIDs may be different. For example, communicating the first MAC CE may include receiving the first MAC CE (e.g., a first PHR MAC CE) and applying bits of the first bit map to respective component carriers of the first group of component carriers responsive to the first LCID, and communicating the second MAC CE may include receiving the second MAC CE (e.g., a second PHR MAC CE) and applying bits of the second bit map to respective component carriers of the second group of component carriers responsive to the second LCID.

According to some other embodiments, a first Logical Channel Identity (LCID) may be provided for the first MAC CE, a second LCID may be provided for the second MAC CE, and the first and second LCIDs may be the same. Communicating the first MAC CE may include interpreting/generating the first MAC CE to include the first bit map having the first size responsive to the first group of component carriers configured for the communication link, and communicating the second MAC CE may include interpreting/generating the second MAC CE to include the second bit map having the second size responsive to the second group of component carriers configured for the communication link.

Configuring the first group of component carriers at block 1701 may include configuring a primary component carrier and a first group of secondary component carriers, configuring the second group of component carriers at block 1701 may include configuring a primary component carrier and a second group of secondary component carriers, the first and second groups of secondary component carriers may be different, each of the first group of secondary component carriers may correspond to a respective bit of the first bit map, and each of the second group of secondary component carriers may correspond to a respective bit of the second bit map.

A respective component carrier index may be associated with each secondary component carrier of the first group, a respective component carrier index may be associated with each secondary component carrier of the second group, at least one of the component carrier indices of the secondary component carriers of the first group may exceed a threshold, none of the component carrier indices of the secondary component carriers of the second group may exceed the threshold, and the size of the first bit map may be greater than the size of the second bit map.

The first bit map may be arranged in a first number of octets of bits, the second bit map may be arranged in a second number of octets of bits, and the first and second numbers of octets of bits may be different.

A number of component carriers in the first group of component carriers may be greater than a number of component carriers in the second group of component carriers, and the size of the first bit map may be greater than the size of the second bit map.

A number of component carriers in the first group of component carriers may be less than a number of component carriers in the second group of component carriers, and the size of the first bit map may be less than the size of the second bit map.

A respective component carrier index may be associated with each component carrier of the first group, a respective component carrier index may be associated with each component carrier of the second group, at least one of the component carrier indices of the first group may exceed a threshold, none of the component carrier indices of the second group may exceed the threshold, and the size of the first bit map may be greater than the size of the second bit map.

According to some embodiments of inventive concepts, operations discussed above with respect to Figure 17 may be performed separately and/or in parallel for a plurality of wireless terminals UEs (e.g.,. wireless terminals UE1 and UE2) in communication with base

station BS (e.g., base station BS-1). Bit map sizes of MAC CEs for different wireless terminals UEs may thus have different sizes.

Accordingly, base station BS-1 processor 203 may configure a first group of component carriers for a first communication link between base station BS-1 and a first wireless terminal UE1 at block 1703, and while configured with the first group of component carriers for the first communication link, processor 203 may communicate a first Medium Access Control (MAC) Control Element (CE) over the first communication link at block 1705, with the first MAC CE including a first bit map having a first size with bits of the first bit map corresponding to respective component carriers of the first group of component carriers. In addition, base station BS-1 processor 203 may configure a second group of component carriers for a second communication link between base station BS-1 and a second wireless terminal UE2 at block 1703, and while configured with the second group of component carriers for the second communication link, processor 203 may communicate a second MAC CE over the second communication link at block 1705, with the second MAC CE including a second bit map having a second size with bits of the second bit map corresponding to respective component carriers of the second group of component carriers, and with the first size of the first bit map being different than the second size of the second bit map.

According to some embodiments, base station operations of Figure 17 may correspond to wireless terminal operations of Figures 15A, 15B, and 15C, and definitions of MAC CEs discussed above with respect to Figures 15A, 15B, and 15C may apply to MAC CEs of Figure 17.

According to some embodiments of inventive concepts illustrated in the flowchart of Figure 18, one or more MAC CEs of a same type (e.g., one or more PHR MAC CEs, or one or more Activation/Deactivation MAC CEs) and having a same bit map size (e.g., one octet) may be used for a same group of component carriers to accommodate different CC configurations, and the one or more MAC CEs for a same group of CCs may be included in a same MAC PDU. For a power headroom report PHR (received by base station BS from wireless terminal UE), for example, if indices of the group of configured CCs can be accommodated in a one octet bit map, one PHR MAC CE of Figure 3 may be included in the MAC PDU for the power headroom report. If indices of the group of configured CCs cannot be accommodated in a one octet bit map, two or more PHR MAC CEs of Figure 3 may be included in the MAC PDU for the power headroom report. For an Activation/Deactivation instruction (transmitted from base station BS to wireless terminal UE), for example, if indices

of the group of configured CCs can be accommodated in a one octet bit map, one Activation/Deactivation MAC CE of Figure 6 may be included in the MAC PDU for the Activation/Deactivation instruction. If indices of the group of configured CCs cannot be accommodated in a one octet bit map, two or more Activation/Deactivation MAC CEs of Figure 6 may be included in the MAC PDU for the Activation/Deactivation instruction.

As shown in Figure 18, responsive to determining that a CC configuration should change at block 1801, base station BS processor 203 may configure a first group of component carriers for a communication link between wireless terminal UE and base station BS at block 1803. While configured with the first group of component carriers, processor 203 may communicate first and second Medium Access Control (MAC) Control Elements (CEs) (through transceiver 201) with the first MAC CE including a first bit map at block 1805, with bits of the first bit map corresponding to respective component carriers of a first sub-set of the first group of component carriers, and with the second MAC CE including a second bit map with bits of the second bit map corresponding to respective component carriers of a second sub-set of the first group of component carriers. As long as the CC configuration remains unchanged at block 1801, operations of blocks 1801 and 1805 may be repeated using first and second MAC CEs for different sub-sets of the first group of component carriers that are configured for the communication link.

Responsive to changing the CC configuration at block 1801, processor 203 may configure a second group of component carriers for a communication link between wireless terminal UE and base station BS, with the second group of component carriers being different than the first group of component carriers. While configured with the second group of component carriers, processor 203 may communicate a third MAC CE (through transceiver 201) at block 1805, with the third MAC CE including a third bit map with bits of the third bit map corresponding to respective component carriers of the second group of component carriers. As long as the CC configuration remains unchanged at block 1801, operations of blocks 1801 and 1805 may be repeated using only one MAC CE for the second group of component carriers.

Moreover, the first, second, and third bit maps may have a same size, with the second group of component carriers including a primary component carrier and a plurality of secondary component carriers, and with each of the plurality of secondary component carriers corresponding to one of the bits of the third bit map.

In addition, the first and second MAC CE's may be included in a same MAC Protocol Data Unit (PDU). For example, the first and second MAC CE's may be included in a first

MAC Protocol Data Unit (PDU), and the third MAC CE may be included in a second MAC PDU. According to some embodiments, base station operations of Figure 18 may correspond to wireless terminal operations of Figure 16, and definitions of MAC CEs discussed above with respect to Figure 16 may apply to MAC CEs of Figure 18.

In some of the embodiments described above, the transmitter of a MAC CE may select one of several MAC CE versions based on the number/group of carriers that is configured for the wireless terminal, or in one particular embodiment, based on whether or not the wireless terminal is configured to use a cell which has a cell index above a threshold (e.g., a cell index greater than 7).

A wireless terminal UE may be configured with a serving cell(s) via the RRC-layer, and the base station eNB may send an RRC message (RRCConnectionReconfiguration) to the wireless terminal UE indicating to add the serving cell/cells which has/have been indicated in the RRC message. For RRC messages, the wireless terminal UE may be allowed a certain processing time during which the wireless terminal UE executes procedures/operations used to apply the configuration. In the example of adding (or configuring) a serving cell, the wireless terminal UE may be allowed a processing time of 20 ms. Accordingly, if the wireless terminal UE receives an RRC message indicating to add a component carrier (also referred to as a serving cell) at time T, the wireless terminal UE should complete the addition (or configuration) of the serving cell, at the latest, by the time T + 20 ms, but the wireless terminal UE may complete the configuration earlier. When the wireless terminal UE has successfully applied the configuration requested by the RRC message, the wireless terminal UE will respond to the network with a completion message (RRCConnectionReconfigurationComplete) indicating that the configuration has been completed. This message indicates to the network that the UE now is applying the new configuration (the configuration which was indicated by the RRC message).

To be able to send the completion message (RRCConnectionReconfigurationComplete), the wireless terminal UE must be scheduled on PUSCH (Physical Uplink Shared Channel) by the network (as with any other transmission on PUSCH), and transmissions on PUSCH use a synchronous HARQ (Hybrid Automatic Repeat Request) protocol.

The HARQ protocol is a stop-and-wait type of transmission protocol in which the transmitter (in this case the wireless terminal UE) sends data and awaits feedback from the receiver on whether the receiver (in this case the network base station eNB) successfully received the transmission or whether the transmitter should perform a retransmission. In LTE

(Long Term Evolution), the time between the transmissions and the expected feedback is 4 milliseconds (ms), and the subsequent retransmission (if any) is performed 4 milliseconds later. This means that the transmitter is transmitting every 8 milliseconds. In LTE, however, the wireless terminal UE may have 8 parallel HARQ processes, which means that in each subframe, the wireless terminal UE can perform a transmission using a different HARQ process in each subframe.

Due to the HARQ protocol and the provision of parallel HARQ processes, data packets from the transmitter may arrive at the receiver out of order. If the wireless terminal UE should send two sets of data S1 and S2 (e.g., data packets S1 and S2), the first set of data S1 may be sent using the first HARQ process in subframe n, and the second (subsequent) set of data S2 may be sent using a second HARQ process which is transmitted in subframe n+1. If the transmission of data S1 in subframe n fails but the transmission of data S2 in the subframe n+1 succeeds, the receiver would first receive the second set of data S2 before receiving the first set of data S1.

Going back to the RRC complete message, the RRC complete message may be sent in subframe n, and a MAC CE may be transmitted in subframe n+1. As explained above, however, the MAC CE may be successfully received by the base station eNB before the RRC completion message is received by base station (e.g., if the initial reception of the RRC completion message fails at the eNB base station). In this situation, when the base station eNB receives the MAC CE in subframe n+1, the base station eNB will yet not know that the base station UE has applied the new RRC configuration because the base station eNB has not received the RRC completion message yet.

In summary, the base station eNB may add (or remove) a set of serving cells for the wireless terminal UE, but due to the HARQ protocol, the base station eNB may not know whether the wireless terminal UE has successfully performed the configuration or not. In this situation, the base station eNB will therefore not know which MAC CE version the wireless terminal UE is sending, and the base station eNB would therefore not know how to decode the MAC CEs received from the wireless terminal UE, and as a result, the base station may be unable to decode all data units included in the same transmission as the MAC CE so that the undecoded data units may need to be discarded.

When applying some embodiments of MAC CEs discussed above, the network base station eNB may not know which version of the MAC CE the wireless terminal UE is applying during the time when the UE is applying an RRC reconfiguration message (e.g., between the time the base station eNB transmits an RRCConnectionReconfiguration message

and the time the base station eNB receives an RRCConnectionReconfigurationComplete message).

According to some embodiments discussed below, methods/operations may be provided to address/resolve this issue, for example, by having the wireless terminal UE send an indicator (also referred to as a MAC CE version indicator) to the network base station eNB which can be used by the network base station eNB to determine which MAC CE version the wireless terminal UE is sending. This indicator will be referred to as version indicator may be included in a version indicator field of the MAC CE. By providing the version indicator in a version indicator field of a MAC CE, the receiving base station eNB can determine which MAC CE version is being sent to correctly decode the MAC CE.

According to some other embodiments, the wireless terminal UE may suspend transmissions of MAC CEs responsive to receiving an RRCConnectionReconfiguration message until a HARQ acknowledgment ACK of the RRCConnectionReconfigurationComplete message is received from the base station eNB.

It should be appreciated that, even though it has been used as example that a wireless terminal UE indicates the MAC CE version to the network base station eNB, embodiments could also be used to allow the network base station eNB to indicate to the wireless terminal UE which MAC CE version it sent. In addition, it should be appreciated that even though embodiments are disclosed using different versions of MAC CEs, embodiments may also be applied to indicate different versions of other messages such as MAC headers, MAC sub headers, and/or payload, which may also cause version uncertainty.

According to some embodiments, a mapping may be established between values of the version indicator field and the MAC CE versions. The wireless terminal UE may indicate in the MAC CE version indicator field the version of the MAC CE by setting the version indicator field: to a first value to indicate that the MAC CE is of a first version; to a second value to indicate that the MAC CE is of a second version; a third value to indicate that the MAC CE is of a third version; etc. In particular, when the version indicator field is a one-bit flag, the wireless terminal UE may set the flag to 0 (or 1) when a first version of the MAC CE is used, and the wireless terminal UE may set the flag to 1 (or 0) when a second version of the MAC CE is used.

This version indicator field may be implemented by using a reserved bit in an existing MAC CE. In the Extended Power Headroom MAC CE illustrated in Figures 21A and 21B, the R-field in the top right position of the figure may be set to 0 if the first version of the MAC CE is sent (supporting 1 primary component carrier and 7 secondary component

carriers C_1 to C_7) as shown in Figure 21A, while setting the R-field to 1 if the other version of MAC CE is sent (supporting 1 primary component carrier and 31 secondary component carriers) as shown in Figure 21B. In the example of Figures 21A-B, the version indicator field may be included in the first octet used to provide the component carrier bit map of the MAC CE. According to the embodiment of Figures 3-4, the embodiment of Figures 6-7, the embodiment of Figure 8, and the embodiment of Figure 10, the version indicator field may be included in the last octet used to provide the component carrier bit map of the MAC CE (using the bit labeled R).

Based on the MAC CE version indicator included in the version indicator field, the base station eNB can know when receiving the MAC CE whether the wireless terminal UE has sent the first MAC CE version or the second MAC CE version based on whether the version indicator bit is 0 or 1. If this embodiment is used, the name of the version indicator field may be changed from the name 'R' (which indicates that the field is 'Reserved') to another name, e.g., I (to indicate Indicator).

According to other embodiments, the wireless terminal UE may indicate in the MAC CE which version is used by changing (e.g., toggling) a flag to a different value (after a reconfiguration resulting in change of MAC CE versions) than the value which the flag had in a previous transmission (before a reconfiguration resulting in change of MAC CE versions). For example, if two MAC CE versions are used, a one-bit flag can be used which is toggled when changing the version of the MAC CE. As an alternative to toggling a one bit flag, a multi-bit version indicator field which can take more than two values can be used, and the value of the version indictor may be increased/incremented (or decreased/decremented or altered according to some other rule or sequence) when the MAC CE version changes. A version indicator field which can distinguish more than two values or states may provide version consistency in the event that a version is reconfigured again before a previous version change has been confirmed. Stated in other words, a multi-bit version indicator field may enable overlapping reconfigurations. Also, a multi-bit version indicator field which can take more than two values may be particularly useful if there are more than two (MAC CE) versions to distinguish between.

The base station eNB can thus know that if the value of the version indicator field has changed compared to the previous value of the version indicator field (i.e., compared to the last time the MAC CE was sent), the wireless terminal UE is sending a different version of the MAC CE.

Figure 19A is a flow chart illustrating wireless terminal UE operations according to some embodiments of inventive concepts. At block 1900, UE processor 303 may establish a connection (e.g., an RRC connection) with base station BS through transceiver 301. In establishing the connection, an initial configuration of component carriers (CCs) may be defined for the connection, and this initial configuration may be considered a change in CC configuration at block 1901 (relative to no configured component carriers before establishing connection). At block 1903, processor 303 may configured the component carriers, and as a part of block 1903, processor 303 may transmit a completion message (through transceiver 301) to base station BS indicating completion of the CC configuration. Because the wireless terminal was not previously connected to base station BS, the first MAC CE version for the first CC configuration of the connection will be a change (from no previously defined MAC CE version) at block 1905, and processor 303 may thus select the appropriate MAC CE version and version indicator at block 1907a. At blocks 1909, 1911, and 1901 for each transmission of a MAC CE, processor 303 may thus transmit MAC CEs (through transceiver 301 using the initial MAC CE version and MAC CE version indicator, until a change in CC configuration is received from base station BS (e.g., using an RRCConnectionReconfiguration message) at block 1901.

Upon receipt (through transceiver 301) of a message (e.g., an RRCConnectionReconfiguration message) changing the CC configuration at block 1901, processor 301 may configure the new component carriers at block 1903. As discussed above configuring the component carriers at block 1903 may include transmitting a completion message (e.g., an RRCConnectionReconfigurationComplete message) through transceiver 301 to base station BS. Such a change in CC configuration may or may not require use of a new MAC CE version and a new version indicator.

For example, if an initial CC configuration includes component carriers C_1, C_3, and C_5 and a next CC configuration includes component carriers C_2, C_4, and C_6, both CC configurations may be accommodated using the MAC CE version of Figure 21A with a 7-bit bit map for component carriers, and no change in MAC CE version is needed at block 1905. In such a case, processor 303 may proceed with operations of blocks 1909, 1911, and 1901 without selecting a new MAC CE version and version indicator until a next change in CC configuration at block 1901.

On the other hand, if an initial CC configuration includes component carriers C_1, C_3, and C_5 and a next CC configuration includes component carriers C_2, C_6, and C_{14}, the initial CC configuration may be supported using the MAC CE version of Figure 21A (with a 7-bit

bit map for component carriers), but the second CC configuration may require the MAC CE version of Figure 21B (with a 31-bit bit map for component carriers). Accordingly, a change in MAC CE version may be indicated at block 1905. In response to determining that a change in MAC CE version is indicated at block 1905, processor 303 may select a new MAC CE version and version indicator at block 1907a, and the new MAC CE version and version indicator may be used for subsequent MAC CE transmissions at block 1911 until a new CC configuration is received at block 1901.

Processor 303 may thus cycle through operations of blocks 1901, 1909, and 1911 transmitting MAC CE using a same MAC CE version and version indicator until a change in CC configuration is received at block 1901 that dictates a change in MAC CE version at block 1905.

In embodiments, of Figure 19A, each version indicator may map to a respective MAC CE version. For example, a 1 bit version indicator may have two values (0 and 1) that respectively map to the two MAC CE versions of Figures 21A and 21B, or a 2 bit version indicator may have four values (00, 01, 10, and 11) that respectively map to four MAC CE versions. In such embodiments, the version indicator may effectively identify the MAC CE being used.

According to some other embodiments of Figure 19B, the version indicator may be used to indicate a change in MAC CE version without necessarily identifying the particular MAC CE being used. Operations of blocks 1900, 1901, 1903, 1905, 1909, and 1911 may be substantially the same as discussed above with respect to Figure 19A. In block 1907b, however, the version indicator may be toggled or incremented/decremented to indicate a change in the MAC CE version. With a one bit version indicator, the value of the version indicator may be toggled (changed from 1 to 0 or from 0 to 1) when the MAC CE version changes. A one bit version indicator may thus be used to indicate a change of MAC CE version regardless of the number of MAC CE versions that may be available. Similarly, a 2 bit version indicator (with 4 possible values) may be incremented/decremented each time the MAC CE version changes. By incrementing, a value of the version indicator may be increased by one (e.g., from 00 to 01, from 01 to 10, from 10 to 11, or from 11 to 00), and by decrementing, a value of the version indicator may be decreased by one (e.g., from 00 to 11, from 11 to 10, from 10 to 01, or from 01 to 00).

In LTE, the wireless terminal UE may be expected to have complied with an RRC message after a certain time which may be in the range of 10-20 milliseconds (depending on which type of reconfiguration is done). The base station eNB may need to only monitor the

version indicator field for a certain time (e.g., the 10-20 millisecond delay time, also referred to as a monitor period) after transmitting an RRC message that is expected to make the wireless terminal UE change the MAC CE version. After the monitoring period has passed, the base station BS may assume that the wireless terminal UE is using the new MAC CE version. Therefore this embodiment allows the base station eNB to refrain from monitoring the version indicator field after the monitoring period has passed, and some processing gain can be achieved because the base station eNB does not need to apply the additional logic used to determine the value of the version indicator field after this monitoring period has passed.

The base station eNB may also only needs to monitor the version indicator field until the wireless terminal UE has confirmed that the RRC configuration has been applied (e.g., when the base station eNB receives the RRCConnectionReconfigurationComplete message). The eNB may thus only needs to monitor the version indicator field for the shorter of the two durations (completion of the monitoring period or receipt of the RRCConnectionReconfigurationComplete message).

Figure 20 is a flow chart illustrating base station operations according to some embodiments discussed above. At block 2001, processor 203 may establish a connection through transceiver 201 with wireless terminal UE, and establishing the connection may include configuring the wireless terminal UE with one component carrier (e.g., the primary component carrier PCell). Until there is a change in CC configuration at block 2005, processor 203 may cycle through operations of blocks 2005, 2021, and 2023, and processor 203 may receive/decode MAC CEs from wireless terminal UE at block 2023 based on the expected MAC CE version (e.g., without considering the version indicator).

If processor 203 determines that the CC configuration for wireless terminal UE should be changed at block 2005, processor 203 may provide the new CC configuration at block 2007 by transmitting an RRCConnectionReconfiguration message indicating the new CC configuration. If the new CC configuration is not expected to result in a change in the MAC CE version at block 2009, processor 203 may continue with operations of blocks 2021, 2023, and 2005, and processor 203 may receive/decode MAC CEs from wireless terminal UE at block 2023 based on the expected MAC CE version (e.g., without considering the version indicator). If a previous CC configuration configures component carriers C_1, C_3, and C_5 and the new CC configuration of block 2007 configures component carriers C_2, C_4, and C_6, the MAC CE version of Figure 21A may be used both before and after changing the CC configuration.

If the new CC configuration is expected to result in a change in the MAC CE version at block 2009, however, processor 203 may select the new MAC CE version and the new version indicator at block 2010. If a previous CC configuration configures component carriers C_1, C_3, and C_5 and the new CC configuration of block 2007 configures component carriers C_2, C_4, and C_{14}, for example, the MAC CE version of Figure 21A may be used before changing the CC configuration, and the MAC CE version of Figure 21B may be used after changing the CC configuration. As discussed above with respect to Figures 19A and 19B, the version indicator may be changed from a first value to a second value to allow processor 201 to determine whether a subsequently received MAC CE is of the first or second version. For example, the version indicator may be: changed from a first value that maps to the first MAC CE version to a second value that maps to the second MAC CE version; toggled from a first value to a second value; incremented from a first value to a next value; etc.

At blocks 2011 and 2015, processor 203 may determine if any MAC CEs are received during a monitoring period after transmitting the RRCConnectionReconfiguration message at block 2007 (e.g., up to 20 ms after transmission). If any MAC CEs are received from wireless terminal UE at block 2011 during this monitoring period, processor 203 may receive/decode the MAC CE using/considering the version indicator. For example, processor 203 may receive/decode the MAC CE twice at block 2017, once assuming the previous MAC CE version and once assuming the expected MAC CE version indicator, and the result that decodes properly may be used. If the received MAC CE has the previous version indicator at block 2019, processor 203 may continue with operations of blocks 2011, 2015, 2017, and 2019 of the monitoring period until either the monitoring period is complete at block 2015 or a MAC CE with the new version indicator is received at block 2019. Once the monitoring period is complete at block 2015 or a MAC CE with the new version indicator is received at block 2019, processor 203 may continue with operations of blocks 2021, 2023 (receiving/decoding based on the new current MAC CE version without considering the version indicator), and 2005 until there is a next change in CC configuration at block 2005.

According to some other embodiments, the wireless terminal UE may suspend transmission of an affected type of MAC CE when receiving/decoding/applying an RRC message that would require the wireless terminal UE to change a MAC CE version that is used. Stated in other words, processor 203 may delay transmission of any MAC CEs of the affected type during a delay period even if other processes in the wireless terminal UE suggests that the wireless terminal UE should send such MAC CEs. According to some

embodiments, processor 203 may resume transmission of the suspended MAC CE type, for example:

- after a certain time delay has passed (e.g., the RRC processing time has passed since the UE received the RRC message);
- after a certain number of new radio frames have passed; and/or
- on occurrence of a certain event (e.g., reception of an acknowledgement from the base station eNB indicating that the base station eNB has received the RRC complete message (RRCConnectionReconfigurationComplete).

Figure 19C is a flow chart illustrating wireless terminal operations according to some embodiments discussed above with respect to delay. Operations of blocks 1901, 1903, 1905, and 1909 may be the same discussed above with respect to Figures 19A and 19B, and at block 1907c, processor 203 may select the appropriate MAC CE version for the new CC configuration (without selecting a version indicator). At blocks 1907d and 1907e, however, processor 303 may delay any MAC CE transmissions of the affected MAC CE type that may otherwise occur during a period when the base station may be unsure of what MAC CE version to expect. The delay of blocks 1907d and 1907e may be defined to end: after a set period of time (e.g., 20 ms) after receiving the instruction to change the CC configuration at block 1901; after a set number of radio frames (e.g., 3 radio frames) after receiving the instruction to change the CC configuration at block 1901; and/or responsive to receiving an acknowledgement ACK from the base station BS confirming receipt of the completion message (RRCConnectionReconfigurationComplete) that was sent, for example, when configuring the component carriers at block 1903. Because a likelihood of ambiguity regarding the MAC CE version may be reduced at the base station, the version indicator may be omitted from embodiments of Figure 19C (e.g., at block 1911).

Example Embodiments

Embodiment 1. A method of operating a wireless terminal in communication with a wireless communication network, the method comprising: configuring a first group of component carriers for a communication link between the wireless terminal and the communication network; while configured with the first group of component carriers, communicating a first Medium Access Control, MAC, Control Element, CE, wherein the first MAC CE includes a first bit map having a first bit map size with bits of the first bit map corresponding to respective component carriers of the first group of component carriers; configuring a second group of component carriers for the communication link between the

wireless terminal and the communication network wherein the first group of component carriers is different than the second group of component carriers; and while configured with the second group of component carriers, communicating a second MAC CE, wherein the second MAC CE includes a second bit map having a second bit map size with bits of the second bit map corresponding to respective component carriers of the second group of component carriers, and wherein the first bit map size of the first bit map is different than the second bit map size of the second bit map.

Embodiment 2. The method of Embodiment 1 wherein communicating the first MAC CE comprises transmitting a first Extended Power Head Room, PHR, MAC CE, and wherein communicating the second MAC CE comprises transmitting a second Extended PHR MAC CE.

Embodiment 3. The method of Embodiment 2 wherein the first Extended PHR MAC CE includes power head room information for each component carrier of the first group of component carriers.

Embodiment 4. The method of Embodiment 1 wherein communicating the first MAC CE comprises receiving a first Activation/Deactivation MAC CE, and wherein communicating the second MAC CE comprises receiving a second Activation/Deactivation MAC CE.

Embodiment 5. The method of Embodiment 4 further comprising: responsive to the first Activation/Deactivation MAC CE, activating/deactivating each component carrier of the first group of component carriers responsive to the first bit map; and responsive to the second Activation/Deactivation MAC CE, activating/deactivating each component carrier of the second group of component carriers responsive to the second bit map.

Embodiment 6. The method of Embodiment 1 wherein the first MAC CE is an Extended Power Head Room, PHR, MAC CE and the second MAC CE is an Activation/Deactivation MAC CE, or wherein the first MAC CE is an Activation/Deactivation MAC CE and the second MAC CE is an Extended PHR MAC CE.

Embodiment 7. The method of any of Embodiments 1-6 wherein a first Logical Channel Identity, LCID, is provided for the first MAC CE, a second LCID is provided for the second MAC CE, and the first and second LCIDs are different.

Embodiment 8. The method of Embodiment 7 wherein communicating the first MAC CE comprises receiving the first MAC CE and applying bits of the first bit map to respective component carriers of the first group of component carriers responsive to the first LCID, and wherein communicating the second MAC CE comprises receiving the second MAC CE and

applying bits of the second bit map to respective component carriers of the second group of component carriers responsive to the second LCID.

Embodiment 9. The method of any of Embodiments 1-5 wherein a first Logical Channel Identity, LCID, is provided for the first MAC CE, a second LCID is provided for the second MAC CE, and the first and second LCIDs are the same.

Embodiment 10. The method of any of Embodiments 1-5 and 9 wherein the first MAC CE includes a first MAC CE version indicator, wherein the second MAC CE includes a second MAC CE version indicator, and wherein the first and second MAC CE version indicators are different.

Embodiment 11. The method of Embodiment 10 wherein configuring the first group of component carriers comprises configuring the first group of component carriers responsive to receiving a first reconfiguration message from the wireless communication network, and wherein configuring the second group of component carriers comprises configuring the second group of component carriers responsive to receiving a second reconfiguration message from the wireless communication network.

Embodiment 12. The method of Embodiment 11 further comprising: responsive to receiving the first reconfiguration message, selecting a first MAC CE version having the first bit map size, wherein communicating the first MAC CE comprises transmitting the first MAC CE to the wireless communication network responsive to selecting the first MAC CE version, wherein the first MAC CE has the first MAC CE version with the first bit map size and the first version indicator; and responsive to receiving the second reconfiguration message, selecting a second MAC CE version having the second bit map size, wherein communicating the second MAC CE comprises transmitting the second MAC CE responsive to selecting the second MAC CE version, wherein the second MAC CE has the second MAC CE version with the second bit map size and the second version indicator.

Embodiment 13. The method of any of Embodiments 1-5 and 9-12 wherein configuring the first group of component carriers comprises configuring the first group of component carriers responsive to receiving a first reconfiguration message from the wireless communication network, and wherein configuring the second group of component carriers comprises configuring the second group of component carriers responsive to receiving a second reconfiguration message from the from the wireless communication network, the method further comprising: responsive to configuring the second group of component carriers, delaying sending any subsequent MAC CEs including the second MAC CE until a delay period has passed and/or until a number of radio frames has passed.

Embodiment 14. The method of any of Embodiments 1-5 and 9-12 wherein configuring the first group of component carriers comprises configuring the first group of component carriers responsive to receiving a first reconfiguration message from the wireless communication network, and wherein configuring the second group of component carriers comprises configuring the second group of component carriers responsive to receiving a second reconfiguration message from the from the wireless communication network, the method further comprising: responsive to receiving the second reconfiguration message, transmitting a reconfiguration complete message to the wireless communication network; and responsive to configuring the second group of component carriers, delaying sending any subsequent MAC CEs including the second MAC CE until an acknowledgement of the reconfiguration complete message is received from the wireless communication network.

Embodiment 15. The method of any of Embodiments 1-5 and 9-14 wherein communicating the first MAC CE comprises transmitting a first Power Headroom Report (PHR) MAC CE including the first bit map having the first bit map size to the wireless communication network, and wherein communicating the second MAC CE comprises transmitting a second PHR MAC CE including the second bit map having the second bit map size to the wireless communication network.

Embodiment 16. The method of any of Embodiments 1-6 and 9 wherein communicating the first MAC CE comprises interpreting/generating the first MAC CE to include the first bit map having the first bit map size responsive to the first group of component carriers configured for the communication link, and wherein communicating the second MAC CE comprises interpreting/generating the second MAC CE to include the second bit map having the second bit map size responsive to the second group of component carriers configured for the communication link.

Embodiment 17. The method of any of Embodiments 1-16 wherein the first group of component carriers includes no more than 8 component carriers, wherein the second group of component carriers includes more than 8 component carriers, and wherein the second bit map size is greater than the first bit map size.

Embodiment 18. The method of Embodiment 17 wherein the first bit map size is no more than one octet and the second bit map size is more than one octet.

Embodiment 19. The method of any of Embodiments 1-18 wherein configuring the first group of component carriers includes configuring a primary component carrier and a first group of secondary component carriers, wherein configuring the second group of component carriers includes configuring a primary component carrier and a second group of

secondary component carriers, wherein the first and second groups of secondary component carriers are different, wherein each of the first group of secondary component carriers corresponds to a respective bit of the first bit map, and wherein each of the second group of secondary component carriers corresponds to a respective bit of the second bit map.

Embodiment 20. The method of any of Embodiments 19 wherein a respective component carrier index is associated with each secondary component carrier of the first group, wherein a respective component carrier index is associated with each secondary component carrier of the second group, wherein at least one of the component carrier indices of the secondary component carriers of the first group exceeds a threshold, wherein none of the component carrier indices of the secondary component carriers of the second group exceeds the threshold, and wherein the first bit map size of the first bit map is greater than the second bit map size of the second bit map.

Embodiment 21. The method of any of Embodiments 1-18 wherein configuring the first group of component carriers includes configuring a primary component carrier and a group of secondary component carriers, wherein each of the group of secondary component carriers corresponds to a respective bit of the first bit map, and wherein configuring the second group of component carriers includes configuring a primary component carrier.

Embodiment 22. The method of Embodiment 21 wherein configuring the second group of component carriers includes configuring a primary component carrier without configuring any secondary component carriers for the second group.

Embodiment 23. The method of any of Embodiments 1-22 wherein the first bit map is arranged in a first number of octets of bits, wherein the second bit map is arranged in a second number of octets of bits, and wherein the first and second numbers of octets of bits are different.

Embodiment 24. The method of any of Embodiments 1-23 wherein a number of component carriers in the first group of component carriers is greater than a number of component carriers in the second group of component carriers and wherein the first bit map size of the first bit map is greater than the second bit map size of the second bit map.

Embodiment 25. The method of any of Embodiments 1-20 and 23 wherein a number of component carriers in the first group of component carriers is less than a number of component carriers in the second group of component carriers and wherein the first bit map size of the first bit map is less than the second bit map size of the second bit map.

Embodiment 26. The method of any of Embodiments 1-25 wherein a respective component carrier index is associated with each component carrier of the first group, wherein

a respective component carrier index is associated with each component carrier of the second group, wherein at least one of the component carrier indices of the first group exceeds a threshold, wherein none of the component carrier indices of the second group exceeds the threshold, and wherein the first bit map size of the first bit map is greater than the second bit map size of the second bit map.

Embodiment 27. The method of any of Embodiments 1-26 wherein communicating the first MAC CE comprises communicating the first MAC CE after configuring the first group of component carriers, wherein configuring the second group of component carriers comprises configuring the second group of component carriers after communicating the first MAC CE, and wherein communicating the second MAC CE comprises communicating the second MAC CE after configuring the second group of component carriers.

Embodiment 28. The method of any of Embodiments 1-26 wherein communicating the second MAC CE comprises communicating the second MAC CE after configuring the second group of component carriers, wherein configuring the first group of component carriers comprises configuring the first group of component carriers after communicating the second MAC CE, and wherein communicating the first MAC CE comprises communicating the first MAC CE after configuring the first group of component carriers.

Embodiment 29. A method of operating a wireless terminal in communication with a wireless communication network, the method comprising: configuring a group of component carriers for a communication link between the wireless terminal and the communication network; and while configured with the group of component carriers, communicating first and second Medium Access Control, MAC, Control Elements, CEs, wherein the first MAC CE includes a first bit map with bits of the first bit map corresponding to respective component carriers of a first sub-set of the group of component carriers, and wherein the second MAC CE includes a second bit map with bits of the second bit map corresponding to respective component carriers of a second sub-set of the group of component carriers.

Embodiment 30. The method of Embodiment 29, wherein the group of component carriers is a first group of component carriers, the method further comprising: configuring a second group of component carriers for a communication link between the wireless terminal and the communication network, wherein the second group of component carriers is different than the first group of component carriers; and while configured with the second group of component carriers, communicating a third MAC CE wherein the third MAC CE includes a third bit map with bits of the third bit map corresponding to respective component carriers of the second group of component carriers.

Embodiment 31. The method of Embodiment 30 wherein the first, second, and third bit maps have a same bit map size, wherein the second group of component carriers includes a primary component carrier and a plurality of secondary component carriers, and wherein each of the plurality of secondary component carriers corresponds to one of the bits of the third bit map.

Embodiment 32. The method of any of Embodiments 30-31 wherein configuring the first group of component carriers includes configuring a primary component carrier and a group of secondary component carriers, wherein the first sub-set of the group of component carriers comprises a first sub-set of the group of secondary component carriers, and wherein the second sub-set of the group of component carriers comprises a second sub-set of the group of secondary component carriers.

Embodiment 33. The method of Embodiment 32 wherein configuring the second group of component carriers includes configuring a primary component carrier without configuring any secondary component carriers for the second group.

Embodiment 34. The method of any of Embodiments 29-33 wherein the first and second MAC CE's are included in a same MAC Protocol Data Unit, PDU.

Embodiment 35. The method of any of Embodiments 29-33 wherein the first and second MAC CE's are included in a first MAC Protocol Data Unit, PDU, and wherein the third MAC CE is included in a second MAC PDU.

Embodiment 36. A wireless terminal comprising: a transceiver configured to provide radio communications with a wireless communication network over a radio interface; and a processor coupled with the transceiver, wherein the processor is configured to perform operations of any of Embodiments 1-35.

Embodiment 37. A wireless terminal adapted to perform operations of any of Embodiments 1-35.

Embodiment 38. A method of operating a node of a wireless communication network, the method comprising: configuring a first group of component carriers for a communication link between the node of the communication network and a wireless terminal; while configured with the first group of component carriers for the communication link, communicating a first Medium Access Control, MAC, Control Element, CE, over the communication link, wherein the first MAC CE includes a first bit map having a first bit map size with bits of the first bit map corresponding to respective component carriers of the first group of component carriers; configuring a second group of component carriers for the communication link between the node of the communication network and the wireless

terminal; and while configured with the second group of component carriers, communicating a second MAC CE, over the communication link wherein the second MAC CE includes a second bit map having a second bit map size with bits of the second bit map corresponding to respective component carriers of the second group of component carriers, and wherein the first bit map size of the first bit map is different than the second bit map size of the second bit map.

Embodiment 39. The method of Embodiment 38 wherein communicating the first MAC CE comprises receiving a first Extended Power Head Room, PHR, MAC CE, and wherein communicating the second MAC CE comprises receiving a second Extended PHR MAC CE.

Embodiment 40. The method of Embodiment 38 wherein communicating the first MAC CE comprises transmitting a first Activation/Deactivation MAC CE, and wherein communicating the second MAC CE comprises transmitting a second Activation/Deactivation MAC CE.

Embodiment 41. The method of Embodiment 40 further comprising: activating/deactivating each component carrier of the first group of component carriers in accordance with the first bit map; and activating/deactivating each component carrier of the second group of component carriers in accordance with the second bit map.

Embodiment 42. The method of any of Embodiments 38-41 wherein a first Logical Channel Identity, LCID, is provided for the first MAC CE, a second LCID is provided for the second MAC CE, and the first and second LCIDs are different.

Embodiment 43. The method of Embodiment 42 wherein communicating the first MAC CE comprises receiving the first MAC CE and applying bits of the first bit map to respective component carriers of the first group of component carriers responsive to the first LCID, and wherein communicating the second MAC CE comprises receiving the second MAC CE and applying bits of the second bit map to respective component carriers of the second group of component carriers responsive to the second LCID.

Embodiment 44. The method of any of Embodiments 38-43 wherein a first Logical Channel Identity, LCID, is provided for the first MAC CE, a second LCID is provided for the second MAC CE, and the first and second LCIDs are the same.

Embodiment 45. The method of any of Embodiments 38-41 and 44 wherein the first MAC CE includes a first MAC CE version indicator, wherein the second MAC CE includes a second MAC CE version indicator, and wherein the first and second MAC CE version indicators are different.

Embodiment 46. The method of Embodiment 45 wherein configuring the first group of component carriers comprises transmitting a first reconfiguration message to the wireless terminal, and wherein configuring the second group of component carriers comprises transmitting a second reconfiguration message to the wireless terminal.

Embodiment 47. The method of Embodiment 46 further comprising: responsive to transmitting the first reconfiguration message, selecting a first MAC CE version having the first bit map size, wherein communicating the first MAC CE comprises receiving the first MAC CE from the wireless terminal and decoding the first MAC CE assuming the first MAC CE version responsive to selecting the first MAC CE version; and responsive to transmitting the second reconfiguration message, selecting a second MAC CE version having the second bit map size, wherein communicating the second MAC CE comprises receiving the second MAC CE from the wireless terminal and decoding the second MAC CE assuming the second MAC CE version responsive to selecting the second MAC CE version.

Embodiment 48. The method of Embodiment 46 further comprising: responsive to transmitting the first reconfiguration message, selecting a first MAC CE version having the first bit map size, wherein communicating the first MAC CE comprises receiving the first MAC CE from the wireless terminal and decoding the first MAC CE assuming the first MAC CE version responsive to selecting the first MAC CE version; and responsive to transmitting the second reconfiguration message, selecting a second MAC CE version having the second bit map size, wherein communicating the second MAC CE comprises receiving the second MAC CE from the wireless terminal, decoding the second MAC CE assuming the second MAC CE version, and decoding the second MAC CE assuming the first MAC CE version responsive to receiving the second MAC CE before completion of a monitoring period after transmitting the second reconfiguration message.

Embodiment 49. The method of any of Embodiments 38-41 and 44-48 wherein communicating the first MAC CE comprises transmitting a first Power Headroom Report (PHR) MAC CE including the first bit map having the first bit map size to the wireless communication network, and wherein communicating the second MAC CE comprises transmitting a second PHR MAC CE including the second bit map having the second bit map size to the wireless communication network.

Embodiment 50. The method of any of Embodiments 38-41 and 44 wherein communicating the first MAC CE comprises interpreting/generating the first MAC CE to include the first bit map having the first bit map size responsive to the first group of component carriers configured for the communication link, and wherein communicating the

second MAC CE comprises interpreting/generating the second MAC CE to include the second bit map having the second bit map size responsive to the second group of component carriers configured for the communication link.

Embodiment 51. The method of any of Embodiments 38-50 wherein the first group of component carriers includes no more than 8 component carriers, wherein the second group of component carriers includes more than 8 component carriers, and wherein the second bit map size is greater than the first bit map size.

Embodiment 52. The method of Embodiment 51 wherein the first bit map size is no more than one octet and the second bit map size is more than one octet.

Embodiment 53. The method of any of Embodiments 38-52 wherein configuring the first group of component carriers includes configuring a primary component carrier and a first group of secondary component carriers, wherein configuring the second group of component carriers includes configuring a primary component carrier and a second group of secondary component carriers, wherein the first and second groups of secondary component carriers are different, wherein each of the first group of secondary component carriers corresponds to a respective bit of the first bit map, and wherein each of the second group of secondary component carriers corresponds to a respective bit of the second bit map.

Embodiment 54. The method of any of Embodiments 38-53 wherein a respective component carrier index is associated with each secondary component carrier of the first group, wherein a respective component carrier index is associated with each secondary component carrier of the second group, wherein at least one of the component carrier indices of the secondary component carriers of the first group exceeds a threshold, wherein none of the component carrier indices of the secondary component carriers of the second group exceeds the threshold, and wherein the first bit map size of the first bit map is greater than the second bit map size of the second bit map.

Embodiment 55. The method of any of Embodiments 38-52 wherein configuring the first group of component carriers includes configuring a primary component carrier and a group of secondary component carriers, wherein each of the group of secondary component carriers corresponds to a respective bit of the first bit map, and wherein configuring the second group of component carriers includes configuring a primary component carrier.

Embodiment 56. The method of Embodiment 55 wherein configuring the second group of component carriers includes configuring a primary component carrier without configuring any secondary component carriers for the second group.

Embodiment 57. The method of any of Embodiments 38-5632-45 wherein the first bit map is arranged in a first number of octets of bits, wherein the second bit map is arranged in a second number of octets of bits, and wherein the first and second numbers of octets of bits are different.

Embodiment 58. The method of any of Embodiments 38-57 wherein a number of component carriers in the first group of component carriers is greater than a number of component carriers in the second group of component carriers and wherein the first bit map size of the first bit map is greater than the second bit map size of the second bit map.

Embodiment 59. The method of any of Embodiments 38-57 wherein a number of component carriers in the first group of component carriers is less than a number of component carriers in the second group of component carriers and wherein the first bit map size of the first bit map is less than the second bit map size of the second bit map.

Embodiment 60. The method of any of Embodiments 38-59 wherein a respective component carrier index is associated with each component carrier of the first group, wherein a respective component carrier index is associated with each component carrier of the second group, wherein at least one of the component carrier indices of the first group exceeds a threshold, wherein none of the component carrier indices of the second group exceeds the threshold, and wherein the first bit map size of the first bit map is greater than the second bit map size of the second bit map.

Embodiment 61. The method of any of Embodiments 38-60 wherein communicating the first MAC CE comprises communicating the first MAC CE after configuring the first group of component carriers, wherein configuring the second group of component carriers comprises configuring the second group of component carriers after communicating the first MAC CE, and wherein communicating the second MAC CE comprises communicating the second MAC CE after configuring the second group of component carriers.

Embodiment 62. The method of any of Embodiments 38-60wherein communicating the second MAC CE comprises communicating the second MAC CE after configuring the second group of component carriers, wherein configuring the first group of component carriers comprises configuring the first group of component carriers after communicating the second MAC CE, and wherein communicating the first MAC CE comprises communicating the first MAC CE after configuring the first group of component carriers.

Embodiment 63. A method of operating a node of a wireless communication network, the method comprising: configuring a first group of component carriers for a first communication link between the node of the communication network and a first wireless

terminal; while configured with the first group of component carriers for the first communication link, communicating a first Medium Access Control, MAC, Control Element, CE, over the first communication link, wherein the first MAC CE includes a first bit map having a first bit map size with bits of the first bit map corresponding to respective component carriers of the first group of component carriers; configuring a second group of component carriers for a second communication link between the node of the communication network and a second wireless terminal; and while configured with the second group of component carriers for the second communication link, communicating a second MAC CE, over the second communication link wherein the second MAC CE includes a second bit map having a second bit map size with bits of the second bit map corresponding to respective component carriers of the second group of component carriers, and wherein the first bit map size of the first bit map is different than the second bit map size of the second bit map.

Embodiment 64. The method of Embodiment 63 wherein configuring the first group of component carriers includes configuring a primary component carrier and a group of secondary component carriers, wherein each of the group of secondary component carriers corresponds to a respective bit of the first bit map, and wherein configuring the second group of component carriers includes configuring a primary component carrier.

Embodiment 65. The method of Embodiment 64 wherein configuring the second group of component carriers includes configuring a primary component carrier without configuring any secondary component carriers for the second group.

Embodiment 66. A method of operating a node of a wireless communication network, the method comprising: configuring a group of component carriers for a communication link between a wireless terminal and the node of the communication network; and while configured with the group of component carriers, communicating first and second Medium Access Control, MAC, Control Elements, CEs, wherein the first MAC CE includes a first bit map with bits of the first bit map corresponding to respective component carriers of a first sub-set of the group of component carriers, and wherein the second MAC CE includes a second bit map with bits of the second bit map corresponding to respective component carriers of a second sub-set of the group of component carriers.

Embodiment 67. The method of Embodiment 66, wherein the group of component carriers is a first group of component carriers, the method further comprising: configuring a second group of component carriers for a communication link between the wireless terminal and the node of the communication network, wherein the second group of component carriers is different than the first group of component carriers; and while configured with the second

group of component carriers, communicating a third MAC CE wherein the third MAC CE includes a third bit map with bits of the third bit map corresponding to respective component carriers of the second group of component carriers.

Embodiment 68. The method of Embodiment 67 wherein configuring the first group of component carriers includes configuring a primary component carrier and a group of secondary component carriers, wherein the first sub-set of the group of component carriers comprises a first sub-set of the group of secondary component carriers, and wherein the second sub-set of the group of component carriers comprises a second sub-set of the group of secondary component carriers.

Embodiment 69. The method of Embodiment 68 wherein configuring the second group of component carriers includes configuring a primary component carrier without configuring any secondary component carriers for the second group.

Embodiment 70. The method of Embodiment 67, wherein the first, second, and third bit maps have a same bit map size, wherein the second group of component carriers includes a primary component carrier and a plurality of secondary component carriers, and wherein each of the plurality of secondary component carriers corresponds to one of the bits of the third bit map.

Embodiment 71. The method of any of Embodiments 66-70 wherein the first and second MAC CE's are included in a same MAC Protocol Data Unit, PDU.

Embodiment 72. The method of any of Embodiments 66-70 wherein the first and second MAC CE's are included in a first MAC Protocol Data Unit, PDU, and wherein the third MAC CE is included in a second MAC PDU.

Embodiment 73. A node of a wireless communication network, the node comprising: a communication interface configured to provide communications with one or more wireless terminals over a radio interface; and a processor coupled with the communication interface, wherein the processor is configured to perform operations of any of Embodiments 38-72.

Embodiment 74. A node of a wireless communication network adapted to perform operations of any of Embodiments 38-72.

Embodiment 75. A method of operating a wireless terminal in communication with a wireless communication network, the method comprising: configuring a first group of component carriers for a communication link between the wireless terminal and the communication network; responsive to configuring the first group of component carriers, selecting a first Medium Access Control, MAC, Control Element, CE, version; while configured with the first group of component carriers, communicating a first MAC CE using

the first MAC CE version; after communicating the first MAC CE, configuring a second group of component carriers for the communication link between the wireless terminal and the communication network wherein the first group of component carriers is different than the second group of component carriers; responsive to configuring the second group of component carriers, selecting a second MAC CE version different than the first MAC CE version; and while configured with the second group of component carriers, communicating a second MAC CE using the second MAC CE version.

Embodiment 76. The method of Embodiment 75 wherein the first MAC CE version defines a first bit map size of a MAC CE, wherein the first MAC CE includes a first bit map having the first bit map size with bits of the first bit map corresponding to respective component carriers of the first group of component carriers, wherein the second MAC CE version defines a second bit map size of a MAC CE different than the first bit map size, and wherein the second MAC CE includes a second bit map having a second bit map size with bits of the second bit map corresponding to respective component carriers of the second group of component carriers.

Embodiment 77. The method of any of Embodiments 75-76 further comprising: responsive to configuring the first group of component carriers, selecting a first MAC CE version indicator, wherein the first MAC CE includes the first MAC CE version indicator; and responsive to configuring the second group of component carriers, selecting a second MAC CE version indicator different than the first MAC CE version indicator, wherein the second MAC CE includes the second MAC CE version indicator.

Embodiment 78. The method of any of Embodiments 77 wherein the first MAC CE version indicator has a first value that maps to the first MAC CE version, wherein the second MAC CE version indicator has a second value that maps to the second MAC CE version.

Embodiment 79. The method of any of Embodiments 77 wherein selecting the second MAC CE version indicator comprises changing the first MAC CE version indicator to the second MAC CE version indicator responsive to configuring the second group of component carriers.

Embodiment 80. The method of Embodiment 79 wherein changing comprises toggling a MAC CE version indicator bit from a first MAC CE version indicator value to a second MAC CE version indicator value.

Embodiment 81. The method of Embodiment 80 further comprising: after communicating the second MAC CE, configuring a third group of component carriers for the communication link between the wireless terminal and the communication network wherein

the third group of component carriers is different than the first group of component carriers and different than the second group of component carriers; responsive to configuring the third group of component carriers, selecting a third MAC CE version different than the first and second MAC CE versions and a third MAC CE version indicator different than the second MAC CE version indicator, wherein selecting the third MAC CE version indicator comprises toggling the MAC CE version indicator bit from the second MAC CE version indicator value to the first MAC CE version indicator value; and while configured with the third group of component carriers, communicating a third MAC CE using the third MAC CE version and including the third MAC CE version indicator.

Embodiment 82. The method of Embodiment 79 wherein changing comprises incrementing/decrementing a MAC CE version indicator value from a first MAC CE version indicator value to a second MAC CE version indicator value.

Embodiment 83. The method of Embodiment 82 further comprising: after communicating the second MAC CE, configuring a third group of component carriers for the communication link between the wireless terminal and the communication network wherein the third group of component carriers is different than the second group of component carriers; responsive to configuring the third group of component carriers, selecting a third MAC CE version different than second MAC CE version and a third MAC CE version indicator different than the second MAC CE version indicator, wherein selecting the third MAC CE version comprises incrementing/decrementing the MAC CE version indicator bit from the second MAC CE version indicator value to a third MAC CE version indicator value; and while configured with the third group of component carriers, communicating a third MAC CE using the third MAC CE version and including the third MAC CE version indicator.

Embodiment 84. The method of any of Embodiments 75-83 wherein configuring the first group of component carriers comprises configuring the first group of component carriers responsive to receiving a first reconfiguration message from the wireless communication network, and wherein configuring the second group of component carriers comprises configuring the second group of component carriers responsive to receiving a second reconfiguration message from the wireless communication network.

Embodiment 85. The method of Embodiment 84 further comprising: responsive to configuring the second group of component carriers, delaying sending any subsequent MAC CEs of a type of the first and second MAC CEs including the second MAC CE until a delay period has passed and/or until a number of radio frames has passed.

Embodiment 86. The method of Embodiment 84 further comprising: responsive to receiving the second reconfiguration message, transmitting a reconfiguration complete message to the wireless communication network; and responsive to configuring the second group of component carriers, delaying sending any subsequent MAC CEs of a type of the first and second MAC CEs including the second MAC CE until an acknowledgement of the reconfiguration complete message is received from the wireless communication network.

Embodiment 87. The method of any of Embodiments 75-86 wherein communicating the first MAC CE comprises transmitting a first Power Headroom Report (PHR) MAC CE including the first bit map having the first bit map size to the wireless communication network, and wherein communicating the second MAC CE comprises transmitting a second PHR MAC CE including the second bit map having the second bit map size to the wireless communication network.

Embodiment 88. The method of any of Embodiments 75-86 wherein a first Logical Channel Identity, LCID, is provided for the first MAC CE, a second LCID is provided for the second MAC CE, and the first and second LCIDs are the same.

Embodiment 89. A wireless terminal comprising: a transceiver configured to provide radio communications with a wireless communication network over a radio interface; and a processor coupled with the transceiver, wherein the processor is configured to perform operations of any of Embodiments 75-88.

Embodiment 90. A wireless terminal adapted to perform operations of any of Embodiments 75-88.

Embodiment 91. A method of operating a node of a wireless communication network, the method comprising: configuring a first group of component carriers for a communication link between the node of the communication network and a wireless terminal; while configured with the first group of component carriers for the communication link, communicating a first Medium Access Control, MAC, Control Element, CE, over the communication link using a first MAC CE version; after communicating the first MAC CE, configuring a second group of component carriers for the communication link between the node of the communication network and the wireless terminal; and while configured with the second group of component carriers, communicating a second MAC CE, over the communication link using a second MAC CE version different than the first MAC CE version.

Embodiment 92. The method of Embodiment 91 wherein the first MAC CE version defines a first bit map size of a MAC CE, wherein the first MAC CE includes a first bit map

having the first bit map size with bits of the first bit map corresponding to respective component carriers of the first group of component carriers, wherein the second MAC CE version defines a second bit map size of a MAC CE different than the first bit map size, and wherein the second MAC CE includes a second bit map having a second bit map size with bits of the second bit map corresponding to respective component carriers of the second group of component carriers.

Embodiment 93. The method of any of Embodiments 91-92 wherein the first MAC CE includes a first MAC CE version indicator, wherein the second MAC CE includes a second MAC CE version indicator, and wherein the first and second MAC CE version indicators are different.

Embodiment 94. The method of any of Embodiments 91-93 wherein configuring the first group of component carriers comprises transmitting a first reconfiguration message to the wireless terminal, and wherein configuring the second group of component carriers comprises transmitting a second reconfiguration message to the wireless terminal.

Embodiment 95. The method of Embodiment 94 further comprising: responsive to transmitting the first reconfiguration message, selecting the first MAC CE version, wherein communicating the first MAC CE comprises receiving the first MAC CE from the wireless terminal and decoding the first MAC CE assuming the first MAC CE version responsive to selecting the first MAC CE version; and responsive to transmitting the second reconfiguration message, selecting the second MAC CE version, wherein communicating the second MAC CE comprises receiving the second MAC CE from the wireless terminal and decoding the second MAC CE assuming the second MAC CE version responsive to selecting the second MAC CE version.

Embodiment 96. The method of Embodiment 94 further comprising: responsive to transmitting the first reconfiguration message, selecting the first MAC CE version, wherein communicating the first MAC CE comprises receiving the first MAC CE from the wireless terminal and decoding the first MAC CE assuming the first MAC CE version responsive to selecting the first MAC CE version; and responsive to transmitting the second reconfiguration message, selecting the second MAC CE version, wherein communicating the second MAC CE comprises receiving the second MAC CE from the wireless terminal, decoding the second MAC CE assuming the second MAC CE version, and decoding the second MAC CE assuming the first MAC CE version responsive to receiving the second MAC CE before completion of a monitoring period after transmitting the second reconfiguration message.

Embodiment 97. The method of Embodiment 96 wherein the first MAC CE includes a first MAC CE version indicator, wherein the second MAC CE includes a second MAC CE version indicator, wherein the first and second MAC CE version indicators are different, and wherein decoding the second MAC CE further comprises using one of the results of decoding the second MAC CE assuming the first and second MAC CE versions based on the MAC CE indicator value of the second MAC CE.

Embodiment 98. The method of any of Embodiments 91-97 wherein communicating the first MAC CE comprises receiving a first Power Headroom Report (PHR) MAC CE including the first bit map having the first bit map size to the wireless communication network, and wherein communicating the second MAC CE comprises receiving a second PHR MAC CE including the second bit map having the second bit map size to the wireless communication network.

Embodiment 99. The method of any of Embodiments 91-98 wherein a first Logical Channel Identity, LCID, is provided for the first MAC CE, a second LCID is provided for the second MAC CE, and the first and second LCIDs are the same.

Embodiment 100. A node of a wireless communication network, the node comprising: a communication interface configured to provide communications with one or more wireless terminals over a radio interface; and a processor coupled with the communication interface, wherein the processor is configured to perform operations of any of Embodiments 91-99.

Embodiment 101. A node of a wireless communication network adapted to perform operations of any of Embodiments 91-99.

Embodiment 102. A wireless terminal , the wireless terminal being adapted to: configure a first group of component carriers for a communication link between the wireless terminal and a communication network; communicate a first Medium Access Control (MAC) Control Element (CE) while configured with the first group of component carriers, wherein the first MAC CE includes a first bit map having a first bit map size with bits of the first bit map corresponding to respective component carriers of the first group of component carriers; configure a second group of component carriers for the communication link between the wireless terminal and the communication network wherein the first group of component carriers is different than the second group of component carriers; and communicating a second MAC CE while configured with the second group of component carriers, wherein the second MAC CE includes a second bit map having a second bit map size with bits of the second bit map corresponding to respective component carriers of the second group of

component carriers, and wherein the first bit map size of the first bit map is different than the second bit map size of the second bit map.

Embodiment 103. A node of a wireless communication network, the node being adapted to: configure a first group of component carriers for a communication link between the node of the communication network and a wireless terminal; communicate a first Medium Access Control (MAC) Control Element (CE) over the communication link while configured with the first group of component carriers for the communication link, wherein the first MAC CE includes a first bit map having a first bit map size with bits of the first bit map corresponding to respective component carriers of the first group of component carriers; configure a second group of component carriers for the communication link between the node of the communication network and the wireless terminal; and communicate a second MAC CE over the communication link while configured with the second group of component carriers, wherein the second MAC CE includes a second bit map having a second bit map size with bits of the second bit map corresponding to respective component carriers of the second group of component carriers, and wherein the first bit map size of the first bit map is different than the second bit map size of the second bit map.

Embodiment 104. A wireless terminal comprising: a transceiver configured to provide radio communications with a wireless communication network over a radio interface; and a processor coupled with the transceiver. The processor is configured to: configure a first group of component carriers for a communication link between the wireless terminal and the communication network; communicate a first Medium Access Control (MAC) Control Element (CE) through the transceiver while configured with the first group of component carriers, wherein the first MAC CE includes a first bit map having a first bit map size with bits of the first bit map corresponding to respective component carriers of the first group of component carriers; configure a second group of component carriers for the communication link between the wireless terminal and the communication network wherein the first group of component carriers is different than the second group of component carriers; and communicate a second MAC CE through the transceiver while configured with the second group of component carriers, wherein the second MAC CE includes a second bit map having a second bit map size with bits of the second bit map corresponding to respective component carriers of the second group of component carriers, and wherein the first bit map size of the first bit map is different than the second bit map size of the second bit map.

Embodiment 105. A node of a wireless communication network, the node comprising: a transceiver configured to provide communications with one or more wireless terminals over

a radio interface; and a processor coupled with the transceiver. The processor is configured to: configure a first group of component carriers for a communication link between the node of the communication network and a wireless terminal; communicate a first Medium Access Control (MAC) Control Element (CE) over the communication link while configured with the first group of component carriers for the communication link, wherein the first MAC CE includes a first bit map having a first bit map size with bits of the first bit map corresponding to respective component carriers of the first group of component carriers; configure a second group of component carriers for the communication link between the node (BS) of the communication network and the wireless terminal; and communicate a second MAC CE over the communication link while configured with the second group of component carriers, wherein the second MAC CE includes a second bit map having a second bit map size with bits of the second bit map corresponding to respective component carriers of the second group of component carriers, and wherein the first bit map size of the first bit map is different than the second bit map size of the second bit map.

Embodiment 106. A wireless terminal comprising a configuring module and a communication module, wherein the configuring module is arranged for configuring a first group of component carriers for a communication link between the wireless terminal and the communication network, the communication module is arranged for communicating a first Medium Access Control (MAC) Control Element (CE) while configured with the first group of component carriers, wherein the first MAC CE includes a first bit map having a first bit map size with bits of the first bit map corresponding to respective component carriers of the first group of component carriers, the configuring module further arranged for configuring a second group of component carriers for the communication link between the wireless terminal and the communication network wherein the first group of component carriers is different than the second group of component carriers, and the communication module further arranged for communicating a second MAC CE while configured with the second group of component carriers, wherein the second MAC CE includes a second bit map having a second bit map size with bits of the second bit map corresponding to respective component carriers of the second group of component carriers, and wherein the first bit map size of the first bit map is different than the second bit map size of the second bit map.

Embodiment 107. A node of a wireless communication network comprising a configuring module and a communication module, wherein the configuring module is arranged for configuring a first group of component carriers for a communication link between the node of the communication network and a wireless terminal, the communication

module is arranged for communicating a first Medium Access Control (MAC) Control Element (CE) over the communication link while configured with the first group of component carriers for the communication link, wherein the first MAC CE includes a first bit map having a first bit map size with bits of the first bit map corresponding to respective component carriers of the first group of component carriers, the configuring module further arranged for configuring a second group of component carriers for the communication link between the node of the communication network and the wireless terminal, and the communication module further arranged for communicating a second MAC CE over the communication link while configured with the second group of component carriers, wherein the second MAC CE includes a second bit map having a second bit map size with bits of the second bit map corresponding to respective component carriers of the second group of component carriers, and wherein the first bit map size of the first bit map is different than the second bit map size of the second bit map.

The configuring module and communition module of a wireless terminal according to Embodiment 106 may at least in one embodiment be implemented as a computer program running on a processor (such as processor 303 of Fig 13). While a wireless terminal according to Embodiment 106 performs processing according to Embodiment 1, other embodiments of wireless terminals comprising a configuring module and a communication module may perform processing according to any one of Embodiments 2-35.

The configuring module and communition module of a node according to Embodiment 107 may at least in one embodiment be implemented as a computer program running on a processor (such as processor 203 of Fig 12). While a node of a wireless communication network according to Embodiment 107 performs processing according to Embodiment 38, other embodiments of nodes comprising a configuring module and a communication module may perform processing according to any one of Embodiments 39-72.

Further Definitions:

When an element is referred to as being "connected", "coupled", "responsive", or variants thereof to another element, it can be directly connected, coupled, or responsive to the other element or one or more intervening elements may be present. In contrast, when an element is referred to as being "directly connected", "directly coupled", "directly responsive", or variants thereof to another element, there are no intervening elements present. Like numbers refer to like nodes/elements throughout. Furthermore, "coupled", "connected", "responsive", or variants thereof as used herein may include wirelessly coupled, connected, or responsive. As used herein, the singular forms "a", "an" and "the" are intended to include the

plural forms as well, unless the context clearly indicates otherwise. Well-known functions or constructions may not be described in detail for brevity and/or clarity. The term "and/or", abbreviated "/", includes any and all combinations of one or more of the associated listed items.

As used herein, the terms "comprise", "comprising", "comprises", "include", "including", "includes", "have", "has", "having", or variants thereof are open-ended, and include one or more stated features, integers, nodes, steps, components or functions but do not preclude the presence or addition of one or more other features, integers, nodes, steps, components, functions or groups thereof. Furthermore, as used herein, the common abbreviation "e.g.", which derives from the Latin phrase "exempli gratia," may be used to introduce or specify a general example or examples of a previously mentioned item, and is not intended to be limiting of such item. The common abbreviation "i.e.", which derives from the Latin phrase "id est," may be used to specify a particular item from a more general recitation.

It will be understood that although the terms first, second, third, etc. may be used herein to describe various elements/operations, these elements/operations should not be limited by these terms. These terms are only used to distinguish one element/operation from another element/operation. Thus a first element/operation in some embodiments could be termed a second element/operation in other embodiments without departing from the teachings of present inventive concepts. Examples of embodiments of aspects of present inventive concepts explained and illustrated herein include their complimentary counterparts. The same reference numerals or the same reference designators denote the same or similar elements throughout the specification.

Example embodiments are described herein with reference to block diagrams and/or flowchart illustrations of computer-implemented methods, apparatus (systems and/or devices) and/or computer program products. It is understood that a block of the block diagrams and/or flowchart illustrations, and combinations of blocks in the block diagrams and/or flowchart illustrations, can be implemented by computer program instructions that are performed by one or more computer circuits. These computer program instructions may be provided to a processor circuit (also referred to as a processor) of a general purpose computer circuit, special purpose computer circuit, and/or other programmable data processing circuit to produce a machine, such that the instructions, which execute via the processor of the computer and/or other programmable data processing apparatus, transform and control transistors, values stored in memory locations, and other hardware components within such

circuitry to implement the functions/acts specified in the block diagrams and/or flowchart block or blocks, and thereby create means (functionality) and/or structure for implementing the functions/acts specified in the block diagrams and/or flowchart block(s).

These computer program instructions may also be stored in a tangible computer-readable medium that can direct a computer or other programmable data processing apparatus to function in a particular manner, such that the instructions stored in the computer-readable medium produce an article of manufacture including instructions which implement the functions/acts specified in the block diagrams and/or flowchart block or blocks.

A tangible, non-transitory computer-readable medium may include an electronic, magnetic, optical, electromagnetic, or semiconductor data storage system, apparatus, or device. More specific examples of the computer-readable medium would include the following: a portable computer diskette, a random access memory (RAM) circuit, a read-only memory (ROM) circuit, an erasable programmable read-only memory (EPROM or Flash memory) circuit, a portable compact disc read-only memory (CD-ROM), and a portable digital video disc read-only memory (DVD/BlueRay).

The computer program instructions may also be loaded onto a computer and/or other programmable data processing apparatus to cause a series of operational steps to be performed on the computer and/or other programmable apparatus to produce a computer-implemented process such that the instructions which execute on the computer or other programmable apparatus provide steps for implementing the functions/acts specified in the block diagrams and/or flowchart block or blocks. Accordingly, embodiments of present inventive concepts may be embodied in hardware and/or in software (including firmware, resident software, micro-code, etc.) that runs on a processor such as a digital signal processor, which may collectively be referred to as "circuitry," "a module" or variants thereof.

It should also be noted that in some alternate implementations, the functions/acts noted in the blocks may occur out of the order noted in the flowcharts. For example, two blocks shown in succession may in fact be executed substantially concurrently or the blocks may sometimes be executed in the reverse order, depending upon the functionality/acts involved. Moreover, the functionality of a given block of the flowcharts and/or block diagrams may be separated into multiple blocks and/or the functionality of two or more blocks of the flowcharts and/or block diagrams may be at least partially integrated. Finally, other blocks may be added/inserted between the blocks that are illustrated. Moreover, although some of the diagrams include arrows on communication paths to show a primary

direction of communication, it is to be understood that communication may occur in the opposite direction to the depicted arrows.

Many different embodiments have been disclosed herein, in connection with the above description and the drawings. It will be understood that it would be unduly repetitious and obfuscating to literally describe and illustrate every combination and subcombination of these embodiments. Accordingly, the present specification, including the drawings, shall be construed to constitute a complete written description of various example combinations and subcombinations of embodiments and of the manner and process of making and using them, and shall support claims to any such combination or subcombination.

Other network elements, communication devices and/or methods according to embodiments of inventive concepts will be or become apparent to one with skill in the art upon review of the present drawings and description. It is intended that all such additional network elements, devices, and/or methods be included within this description, be within the scope of the present inventive concepts. Moreover, it is intended that all embodiments disclosed herein can be implemented separately or combined in any way and/or combination.

CLAIMS:

1. A method of operating a wireless terminal in communication with a wireless communication network, the method comprising:

receiving a first Medium Access Control (MAC) Control Element (CE) from the wireless communication network, wherein the first MAC CE includes a first bit map having a first bit map size with bits of the first bit map corresponding to respective component carriers of a first group of component carriers and indicating an activation status of the respective component carriers of the first group; and

receiving a second MAC CE from the wireless communication network, wherein the second MAC CE includes a second bit map having a second bit map size with bits of the second bit map corresponding to respective component carriers of a second group of component carriers and indicating an activation status of the respective component carriers of the second group, and wherein the first bit map size of the first bit map is different than the second bit map size of the second bit map.

2. The method of Claim 1 further comprising:

responsive to the first MAC CE, activating/deactivating component carriers of the first group of component carriers responsive to the first bit map; and

responsive to the second MAC CE, activating/deactivating component carriers of the second group of component carriers responsive to the second bit map.

3. The method of Claim 1, wherein a first Logical Channel Identity (LCID) is provided for the first MAC CE, a second LCID is provided for the second MAC CE, and the first and second LCIDs are different.

4. The method of Claim 3 wherein receiving the first MAC CE comprises receiving the first MAC CE and applying bits of the first bit map to respective component carriers of the first group of component carriers responsive to the first LCID, and wherein receiving the second MAC CE comprises receiving the second MAC CE and applying bits of the second bit map to respective component carriers of the second group of component carriers responsive to the second LCID.

5. The method of Claim 1, wherein the first group of component carriers includes no more than 8 component carriers, wherein the second group of component carriers includes

more than 8 component carriers, and wherein the second bit map size is greater than the first bit map size.

6. The method of Claim 5, wherein the first bit map size is no more than one octet and the second bit map size is more than one octet.

7. The method of Claim 1, wherein the first group of component carriers includes a first group of secondary component carriers, wherein the second group of component carriers includes a second group of secondary component carriers, wherein the first and second groups of secondary component carriers are different, wherein each of the first group of secondary component carriers corresponds to a respective bit of the first bit map, and wherein each of the second group of secondary component carriers corresponds to a respective bit of the second bit map.

8. The method of Claim 7, wherein a respective component carrier index is associated with each secondary component carrier of the first group, wherein a respective component carrier index is associated with each secondary component carrier of the second group, wherein at least one of the component carrier indices of the secondary component carriers of the first group exceeds a threshold, wherein none of the component carrier indices of the secondary component carriers of the second group exceeds the threshold, and wherein the first bit map size of the first bit map is greater than the second bit map size of the second bit map.

9. A wireless terminal comprising:

a transceiver configured to provide radio communications with a wireless communication network over a radio interface; and

a processor coupled with the transceiver, wherein the processor is configured to: receive a first Medium Access Control (MAC) Control Element (CE) through the transceiver from the wireless communication network, wherein the first MAC CE includes a first bit map having a first bit map size with bits of the first bit map corresponding to respective component carriers of a first group of component carriers and indicating an activation status of the respective component carriers of the first group; and

receive a second MAC CE through the transceiver from the wireless communication network, wherein the second MAC CE includes a second bit map having a second bit map size with bits of the second bit map corresponding to respective component carriers of a second group of component carriers and indicating an activation status of the respective component carriers of the second group, and wherein the first bit map size of the first bit map is different than the second bit map size of the second bit map.

10. The wireless terminal of Claim 9, wherein the processor is further configured to:

activate/deactivate component carriers of the first group of component carriers responsive to the first MAC CE and the first bit map; and

activate/deactivate component carriers of the second group of component carriers responsive to the second MAC CE and the second bit map.

11. The wireless terminal of Claim 9, wherein a first Logical Channel Identity (LCID) is provided for the first MAC CE, a second LCID is provided for the second MAC CE, and the first and second LCIDs are different.

12. The wireless terminal of Claim 11, wherein receiving the first MAC CE comprises receiving the first MAC CE and applying bits of the first bit map to respective component carriers of the first group of component carriers responsive to the first LCID, and wherein receiving the second MAC CE comprises receiving the second MAC CE and applying bits of the second bit map to respective component carriers of the second group of component carriers responsive to the second LCID.

13. The wireless terminal of Claim 9, wherein the first group of component carriers includes no more than 8 component carriers, wherein the second group of component carriers includes more than 8 component carriers, and wherein the second bit map size is greater than the first bit map size.

14. The wireless terminal of Claim 13, wherein the first bit map size is no more than one octet and the second bit map size is more than one octet.

15. The wireless terminal of Claim 9, wherein the first group of component carriers includes a first group of secondary component carriers, wherein the second group of component carriers includes a second group of secondary component carriers, wherein the first and second groups of secondary component carriers are different, wherein each of the first group of secondary component carriers corresponds to a respective bit of the first bit map, and wherein each of the second group of secondary component carriers corresponds to a respective bit of the second bit map.

16. The wireless terminal of Claim 15, wherein a respective component carrier index is associated with each secondary component carrier of the first group, wherein a respective component carrier index is associated with each secondary component carrier of the second group, wherein at least one of the component carrier indices of the secondary component carriers of the first group exceeds a threshold, wherein none of the component carrier indices of the secondary component carriers of the second group exceeds the threshold, and wherein the first bit map size of the first bit map is greater than the second bit map size of the second bit map.

17. A method of operating a node of a wireless communication network, the method comprising:

transmitting a first Medium Access Control (MAC) Control Element (CE) to a wireless terminal, wherein the first MAC CE includes a first bit map having a first bit map size with bits of the first bit map corresponding to respective component carriers of a first group of component carriers and indicating an activation status of the respective component carriers of the first group; and

transmitting a second MAC CE to the wireless terminal, wherein the second MAC CE includes a second bit map having a second bit map size with bits of the second bit map corresponding to respective component carriers of a second group of component carriers and indicating an activation status of the respective component carriers of the second group, and wherein the first bit map size of the first bit map is different than the second bit map size of the second bit map.

18. The method of Claim 17, wherein a first Logical Channel Identity (LCID) is provided for the first MAC CE, a second LCID is provided for the second MAC CE, and the first and second LCIDs are different.

19. The method of Claim 17, wherein the first group of component carriers includes no more than 8 component carriers, wherein the second group of component carriers includes more than 8 component carriers, and wherein the second bit map size is greater than the first bit map size.

20. The method of Claim 17, wherein the first group of component carriers includes a first group of secondary component carriers, wherein the second group of component carriers includes a second group of secondary component carriers, wherein the first and second groups of secondary component carriers are different, wherein each of the first group of secondary component carriers corresponds to a respective bit of the first bit map, and wherein each of the second group of secondary component carriers corresponds to a respective bit of the second bit map.

21. The method of Claim 20, wherein a respective component carrier index is associated with each secondary component carrier of the first group, wherein a respective component carrier index is associated with each secondary component carrier of the second group, wherein at least one of the component carrier indices of the secondary component carriers of the first group exceeds a threshold, wherein none of the component carrier indices of the secondary component carriers of the second group exceeds the threshold, and wherein the first bit map size of the first bit map is greater than the second bit map size of the second bit map.

22. A node of a wireless communication network, the node comprising:

a transceiver configured to provide radio communications with one or more wireless terminals over a radio interface; and

a processor coupled with the transceiver, wherein the processor is configured to: transmit a first Medium Access Control (MAC) Control Element (CE) through the transceiver to a wireless terminal, wherein the first MAC CE includes a first bit map having a first bit map size with bits of the first bit map corresponding to respective component carriers of a first group of component carriers and indicating an activation status of the respective component carriers of the first group; and

transmit a second MAC CE through the transceiver to the wireless terminal, wherein the second MAC CE includes a second bit map having a second bit map size with bits of the second bit map corresponding to respective component carriers of a second group of component carriers and indicating an activation status of the respective component carriers of the second group, and wherein the first bit map size of the first bit map is different than the second bit map size of the second bit map.

23. The node of Claim 22, wherein a first Logical Channel Identity (LCID) is provided for the first MAC CE, a second LCID is provided for the second MAC CE, and the first and second LCIDs are different.

24. The node of Claim 22, wherein the first group of component carriers includes no more than 8 component carriers, wherein the second group of component carriers includes more than 8 component carriers, and wherein the second bit map size is greater than the first bit map size.

25. The node of Claim 22, wherein the first group of component carriers includes a first group of secondary component carriers, wherein the second group of component carriers includes a second group of secondary component carriers, wherein the first and second groups of secondary component carriers are different, wherein each of the first group of secondary component carriers corresponds to a respective bit of the first bit map, and wherein each of the second group of secondary component carriers corresponds to a respective bit of the second bit map.

26. The node of Claim 25, wherein a respective component carrier index is associated with each secondary component carrier of the first group, wherein a respective component carrier index is associated with each secondary component carrier of the second group, wherein at least one of the component carrier indices of the secondary component carriers of the first group exceeds a threshold, wherein none of the component carrier indices of the secondary component carriers of the second group exceeds the threshold, and wherein the first bit map size of the first bit map is greater than the second bit map size of the second bit map.

27. A method of operating a wireless terminal in communication with a wireless communication network, the method comprising:

receiving a medium access control, MAC, control element, CE, from the wireless communication network, wherein the MAC CE has one of a plurality of plurality of formats, wherein a first format of the plurality of formats has a first bit map size and the first format is associated with a first Logical Channel Identity (LCID), wherein a second format of the plurality of formats has a second bit map size and the second format is associated with a second LCID, wherein the first and second bit map sizes are different, and wherein the first and second LCIDs are different; and

responsive to receiving one of the first and second LCIDs together with the MAC CE, applying a bit map of the MAC CE using one of the first and second bit map sizes to activate/deactivate component carriers of a group of component carriers based on the one of the first and second LCIDs received together with the MAC CE.

28. The method of Claim 27, wherein the first LICD is received together with the MAC CE, wherein the MAC CE has the first format, wherein the bit map has the first bit map size of the first format, and wherein applying the bit map comprises applying the bit map of the MAC CE using the first bit map size to activate/deactivate respective ones of the component carriers of the group of component carriers responsive to receiving the first LCID together with the MAC CE.

29. The method of Claim 28, wherein the group of component carriers includes a group of secondary component carriers, and wherein each of the group of secondary component carriers corresponds to a respective bit of the bit map of the MAC CE.

30. The method of Claim 29, wherein a respective component carrier index is associated with each component carrier of the group of secondary component carriers, wherein at least one of the component carrier indices of the component carriers of the group of secondary component carriers exceeds a threshold, and wherein the first bit map size is greater than the second bit map size.

31. The method of Claim 28, wherein the MAC CE is a first MAC CE, wherein the bit map is a first bit map, and wherein the component carriers are first component carriers of a first group, the method further comprising:

receiving a second MAC CE from the wireless communication network, wherein the second MAC CE is received together with the second LCID, wherein the second MAC CE has the second format, and wherein second MAC CE has a second bit map with the second bit map size of the second format; and

responsive to receiving the second LCID together with the second MAC CE, applying the second bit map of the second MAC CE using the second bit map size to activate/deactivate second component carriers of a second group of component carriers.

32. A wireless terminal comprising:

a transceiver configured to provide radio communications with a wireless communication network over a radio interface; and

a processor coupled with the transceiver, wherein the processor is configured to:

receive a medium access control, MAC, control element, CE, from the wireless communication network, wherein the MAC CE has one of a plurality of plurality of formats, wherein a first format of the plurality of formats has a first bit map size and the first format is associated with a first Logical Channel Identity (LCID), wherein a second format of the plurality of formats has a second bit map size and the second format is associated with a second LCID, wherein the first and second bit map sizes are different, and wherein the first and second LCIDs are different; and

responsive to receiving one of the first and second LCIDs together with the MAC CE, applying a bit map of the MAC CE using one of the first and second bit map sizes to activate/deactivate component carriers of a group of component carriers based on the one of the first and second LCIDs received together with the MAC CE.

33. The wireless terminal of Claim 32, wherein the first LICD is received together with the MAC CE, wherein the MAC CE has the first format, wherein the bit map has the first bit map size of the first format, and wherein applying the bit map comprises applying the bit map of the MAC CE using the first bit map size to activate/deactivate respective ones of the component carriers of the group of component carriers responsive to receiving the first LCID together with the MAC CE.

34. The wireless terminal of Claim 33, wherein the group of component carriers includes a group of secondary component carriers, and wherein each of the group of secondary component carriers corresponds to a respective bit of the bit map of the MAC CE.

35. The wireless terminal of Claim 34, wherein a respective component carrier index is associated with each component carrier of the group of secondary component carriers, wherein at least one of the component carrier indices of the component carriers of the group of secondary component carriers exceeds a threshold, and wherein the first bit map size is greater than the second bit map size.

36. The wireless terminal of Claim 33, wherein the MAC CE is a first MAC CE, wherein the bit map is a first bit map, and wherein the component carriers are first component carriers of a first group, wherein the processor is further configured to:

receive a second MAC CE from the wireless communication network, wherein the second MAC CE is received together with the second LCID, wherein the second MAC CE has the second format, and wherein second MAC CE has a second bit map with the second bit map size of the second format; and

apply the second bit map of the second MAC CE using the second bit map size to activate/deactivate second component carriers of a second group of component carriers responsive to receiving the second LCID together with the second MAC CE.

37. A method of operating a node of a wireless communication network, the method comprising:

selecting one of first and second formats for a medium access control, MAC, control element, CE, wherein the first format of the plurality of formats has a first bit map size and the first format is associated with a first Logical Channel Identify (LCID), wherein the second format has a second bit map size and the second format is associated with a second LCID, wherein the first and second bit map sizes are different, and wherein the first and second LCIDs are different; and

transmitting the MAC CE to a wireless terminal together with one of the first and second LCIDs associated with the one of the first and second formats selected for the MAC CE, wherein the MAC CE includes a bit map having one of the first and second bit map sizes associated with the one of the plurality of formats selected for the MAC CE, wherein bits of the bit map correspond to respective component carriers of a group of component carriers and includes an activation status of the respective component carriers of the group.

38. The method of Claim 37, wherein selecting comprises selecting the first format for the MAC CE, wherein the first LICD is transmitted together with the MAC CE, wherein the MAC CE has the first format, and wherein the bit map has the first bit map size of the first format.

39. The method of Claim 38, wherein the group of component carriers includes a group of secondary component carriers, and wherein each of the group of secondary component carriers corresponds to a respective bit of the bit map of the MAC CE.

40. The method of Claim 39, wherein a respective component carrier index is associated with each component carrier of the group of secondary component carriers, wherein the first bit map size is greater than the second bit map size, and wherein the first format for the MAC CE is selected responsive to determining that at least one of the component carrier indices of the component carriers of the group of secondary component carriers exceeds a threshold.

41. The method of Claim 38, wherein the MAC CE is a first MAC CE, wherein the bit map is a first bit map, and wherein the component carriers are first component carriers of a first group, the method further comprising:

selecting the second format for a second MAC CE; and

transmitting the second MAC CE to the wireless terminal together with the second LCID associated with the second format, wherein the second MAC CE includes a bit map having the second bit map size associated with the second format selected for the MAC CE, wherein bits of the second bit map correspond to respective component carriers of a second group of component carriers and includes an activation status of the respective component carriers of the second group.

42. A node of a wireless communication network comprising:

a transceiver configured to provide radio communications with a wireless terminal over a radio interface; and

a processor coupled with the transceiver, wherein the processor is configured to:

select one of first and second formats for a medium access control, MAC, control element, CE, wherein the first format of the plurality of formats has a first bit map size and the first format is associated with a first Logical Channel Identify

(LCID), wherein the second format has a second bit map size and the second format is associated with a second LCID, wherein the first and second bit map sizes are different, and wherein the first and second LCIDs are different; and

transmit the MAC CE to a wireless terminal together with one of the first and second LCIDs associated with the one of the first and second formats selected for the MAC CE, wherein the MAC CE includes a bit map having one of the first and second bit map sizes associated with the one of the plurality of formats selected for the MAC CE, wherein bits of the bit map correspond to respective component carriers of a group of component carriers and includes an activation status of the respective component carriers of the group.

43. The node of Claim 42, wherein selecting comprises selecting the first format for the MAC CE, wherein the first LICD is transmitted together with the MAC CE, wherein the MAC CE has the first format, and wherein the bit map has the first bit map size of the first format.

44. The node of Claim 43, wherein the group of component carriers includes a group of secondary component carriers, and wherein each of the group of secondary component carriers corresponds to a respective bit of the bit map of the MAC CE.

45. The node of Claim 44, wherein a respective component carrier index is associated with each component carrier of the group of secondary component carriers, wherein the first bit map size is greater than the second bit map size, and wherein the first format for the MAC CE is selected responsive to determining that at least one of the component carrier indices of the component carriers of the group of secondary component carriers exceeds a threshold.

46. The node of Claim 43, wherein the MAC CE is a first MAC CE, wherein the bit map is a first bit map, and wherein the component carriers are first component carriers of a first group, wherein the processor is further configured to:

select the second format for a second MAC CE; and

transmit the second MAC CE to the wireless terminal together with the second LCID associated with the second format, wherein the second MAC CE includes a bit map having the second bit map size associated with the second format selected for the MAC CE, wherein bits of the second bit map correspond to respective component

carriers of a second group of component carriers and includes an activation status of the respective component carriers of the second group.

5

ABSTRACT

According to one embodiment, a method of operating a wireless terminal may include configuring a first group of component carriers, and while configured with the first group of component carriers, communicating a first MAC CE including a first bit map having a first bit map size with bits of the first bit map corresponding to respective component carriers of the first group of component carriers. The method may also include configuring a second group of component carriers wherein the first and second groups of component carriers are different. While configured with the second group of component carriers, a second MAC CE may be communicated, wherein the second MAC CE includes a second bit map having a second bit map size with bits of the second bit map corresponding to respective component carriers of the second group of component carriers. Moreover, the first and second bit map sizes may be different.

FIGURE 1

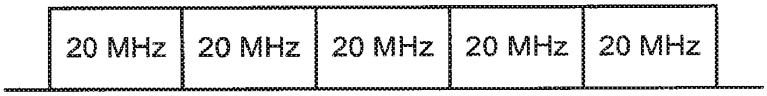

FIGURE 2A

Index	LCID values
00000	CCCH
00001-01010	Identity of the logical channel
01011-11000	Reserved
11001	Extended Power Headroom Report
11010	Power Headroom Report
11011	C-RNTI
11100	Truncated BSR
11101	Short BSR
11110	Long BSR
11111	Padding

FIGURE 2B

Index	LCID values
00000	CCCH
00001-01010	Identity of the logical channel
01011-11001	Reserved
11010	Long DRX Command
11011	Activation/Deactivation
11100	UE Contention Resolution Identity
11101	Timing Advance Command
11110	DRX Command
11111	Padding

FIGURE 2C

PH	Power Headroom Level
0	POWER_HEADROOM_0
1	POWER_HEADROOM_1
2	POWER_HEADROOM_2
3	POWER_HEADROOM_3
...	...
60	POWER_HEADROOM_60
61	POWER_HEADROOM_61
62	POWER_HEADROOM_62
63	POWER_HEADROOM_63

FIGURE 3

C_7	C_6	C_5	C_4	C_3	C_2	C_1	R
P	V	PH (Type 2, PCell)					
R	R	$P_{CMAX,c}$ 1					
P	V	PH (Type 1, PCell)					
R	R	$P_{CMAX,c}$ 2					
P	V	PH (Type 1, SCell 1)					
R	R	$P_{CMAX,c}$ 3					

...

P	V	PH (Type 1, SCell n)
R	R	$P_{CMAX,c}$ m

FIGURE 4

C_{31}	C_{30}	C_{29}	C_{28}	C_{27}	C_{26}	C_{25}	C_{24}
C_{23}	C_{22}	C_{21}	C_{20}	C_{19}	C_{18}	C_{17}	C_{16}
C_{15}	C_{14}	C_{13}	C_{12}	C_{11}	C_{10}	C_9	C_8
C_7	C_6	C_5	C_4	C_3	C_2	C_1	R
P	V	PH (Type 2, PCell)					
R	R	$P_{CMAX,c}$ 1					
P	V	PH (Type 1, PCell)					
R	R	$P_{CMAX,c}$ 2					
P	V	PH (Type 1, SCell 1)					
R	R	$P_{CMAX,c}$ 3					

...

P	V	PH (Type 1, SCell n)
R	R	$P_{CMAX,c}$ m

FIGURE 5

P_{CMAX_c}	Nominal UE transmit power level
0	PCMAX_C_00
1	PCMAX_C_01
2	PCMAX_C_02
...	...
61	PCMAX_C_61
62	PCMAX_C_62
63	PCMAX_C_63

FIGURE 6

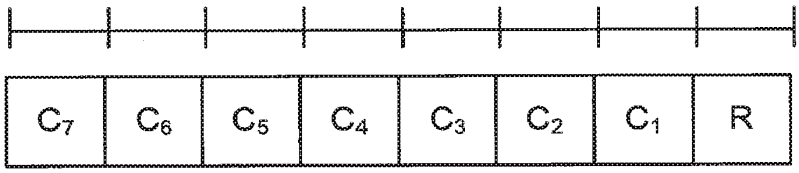

FIGURE 7

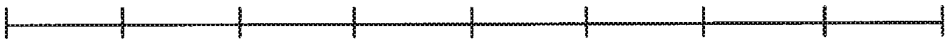

C_{31}	C_{30}	C_{29}	C_{28}	C_{27}	C_{26}	C_{25}	C_{24}
C_{23}	C_{22}	C_{21}	C_{20}	C_{19}	C_{18}	C_{17}	C_{16}
C_{15}	C_{14}	C_{13}	C_{12}	C_{11}	C_{10}	C_9	C_8
C_7	C_6	C_5	C_4	C_3	C_2	C_1	R

FIGURE 8

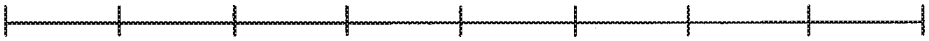

C_n	C_{n-1}	C_{n-2}	C_{n-3}	C_{n-4}	C_{n-5}	C_{n-6}	C_{n-7}

...

C_7	C_6	C_5	C_4	C_3	C_2	C_1	R
P	V	PH (Type 2, PCell)					
R	R	$P_{CMAX,c}$ 1					
P	V	PH (Type 1, PCell)					
R	R	$P_{CMAX,c}$ 2					
P	V	PH (Type 1, SCell 1)					
R	R	$P_{CMAX,c}$ 3					

...

P	V	PH (Type 1, SCell n)
R	R	$P_{CMAX,c}$ m

FIGURE 9

$P_{CMAX,C}$	Nominal UE transmit power level
0	PCMAX_C_00
1	PCMAX_C_01
2	PCMAX_C_02
...	...
61	PCMAX_C_61
62	PCMAX_C_62
63	PCMAX_C_63

FIGURE 10

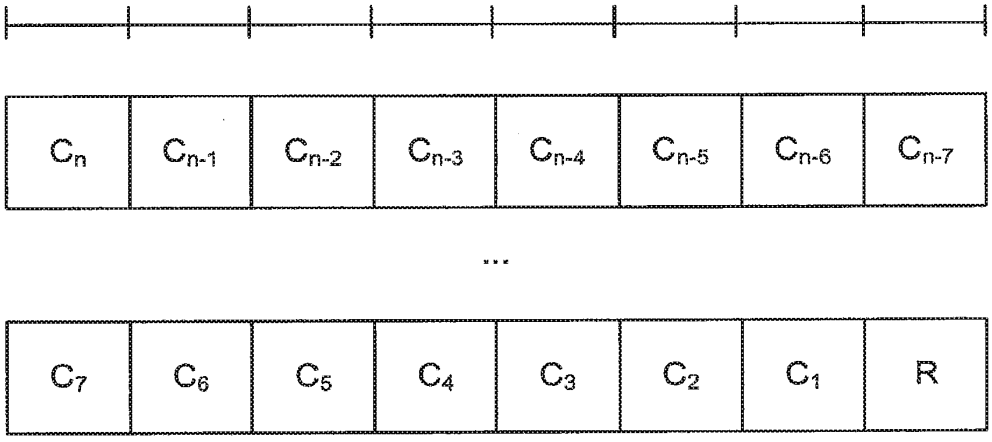

Figure 11

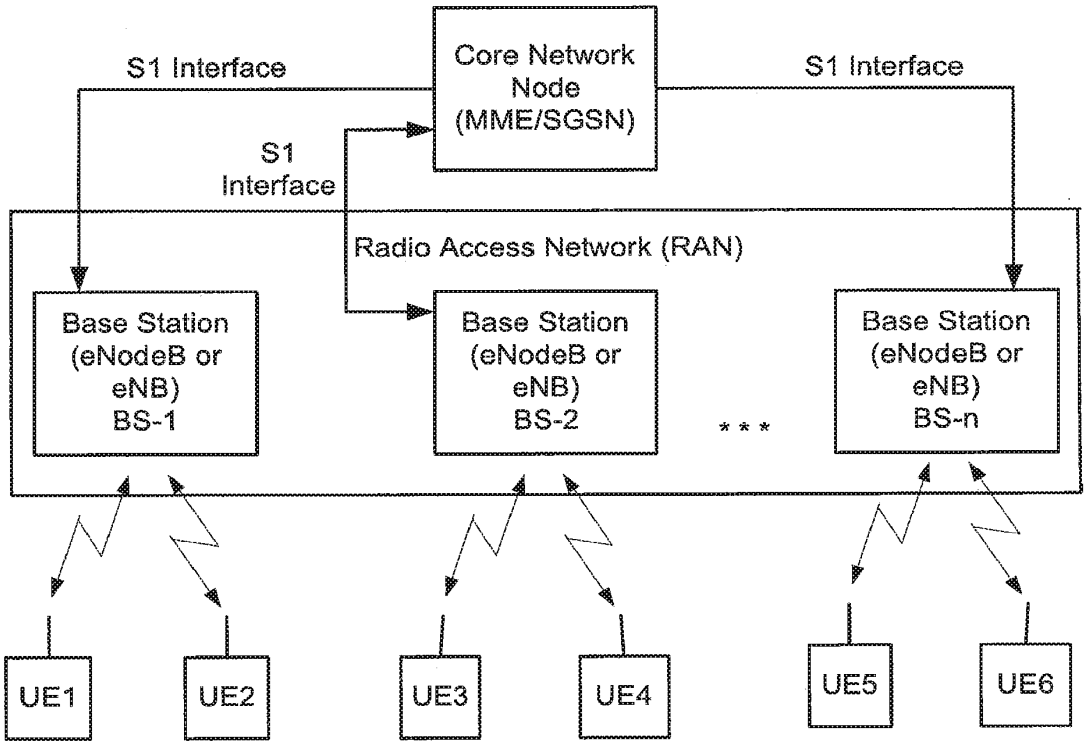
Core Network Node (MME/SGSN)
S1 Interface
S1 Interface
S1 Interface
Radio Access Network (RAN)
Base Station (eNodeB or eNB) BS-1
Base Station (eNodeB or eNB) BS-2
Base Station (eNodeB or eNB) BS-n
* * *
UE1
UE2
UE3
UE4
UE5
UE6

Figure 12

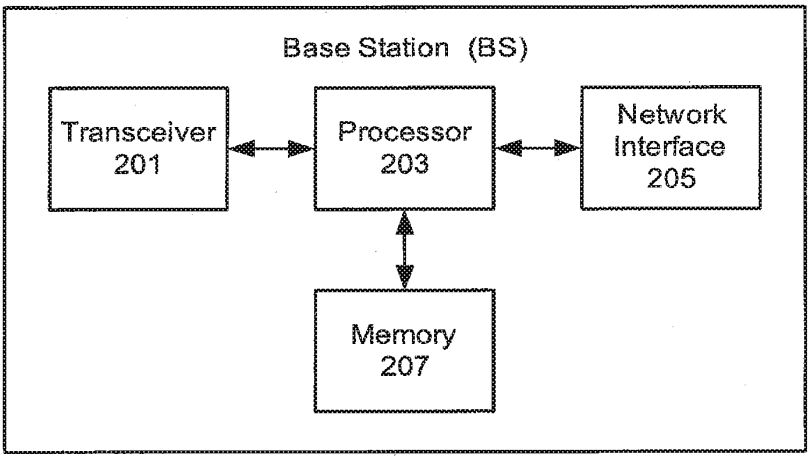

Figure 13

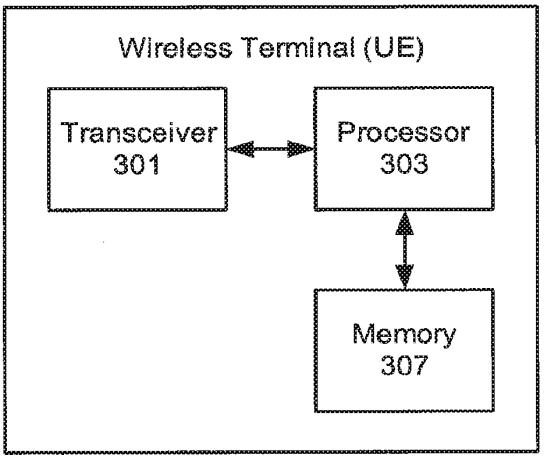

Figure 14

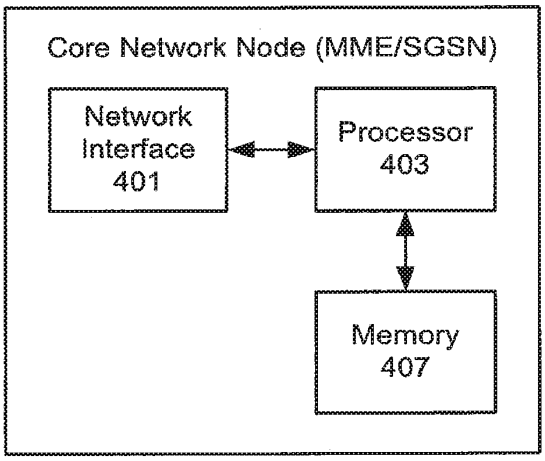
Core Network Node (MME/SGSN)
Network Interface 401
Processor 403
Memory 407

Figure 15A

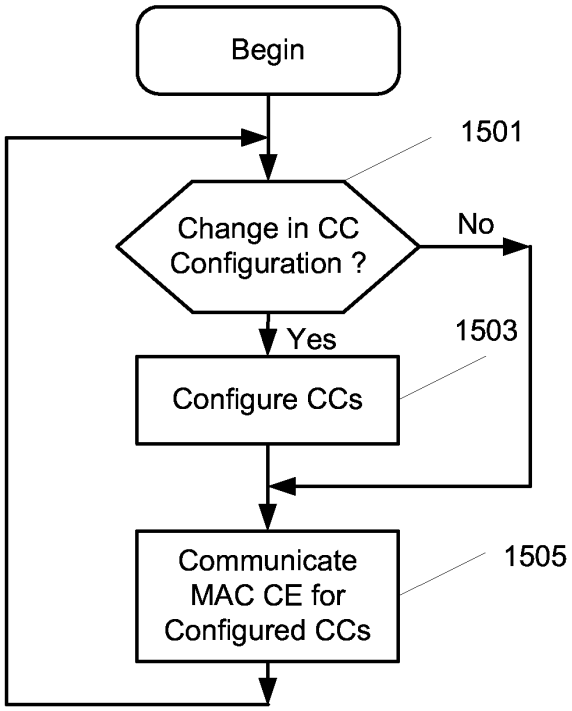

Figure 15B

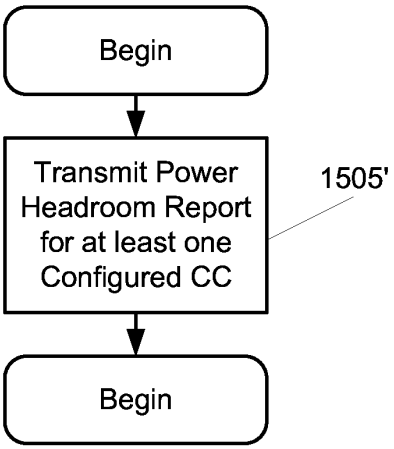

Figure 15C

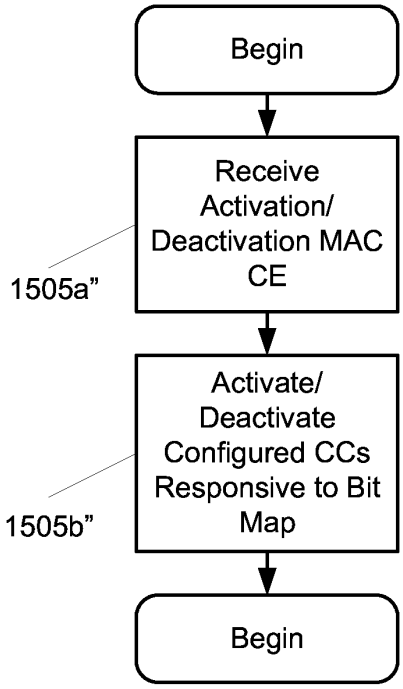

Figure 16

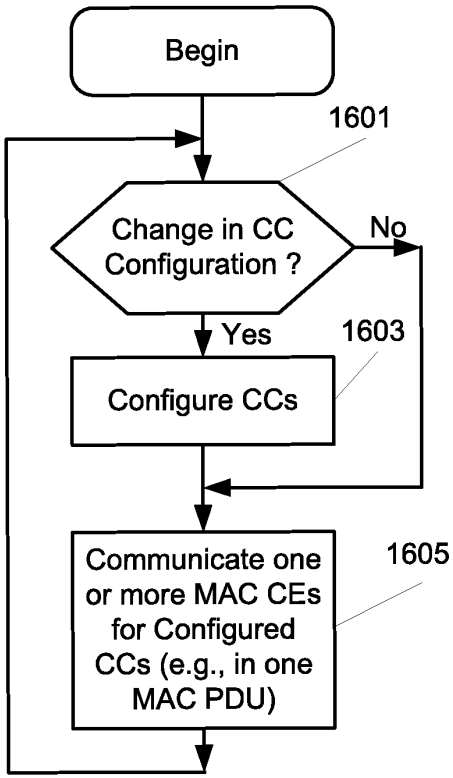

Figure 17

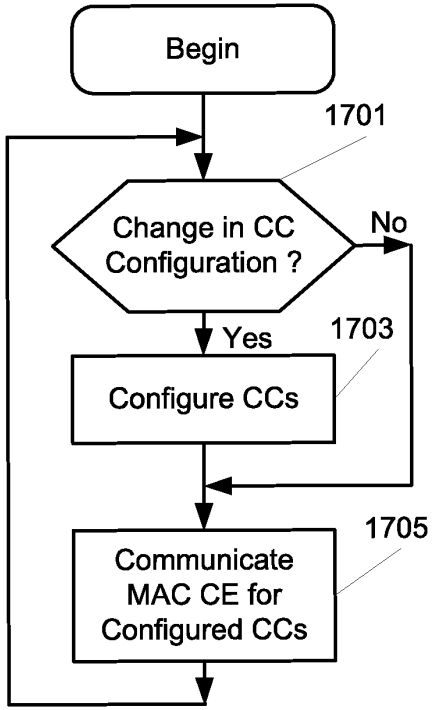

Figure 18

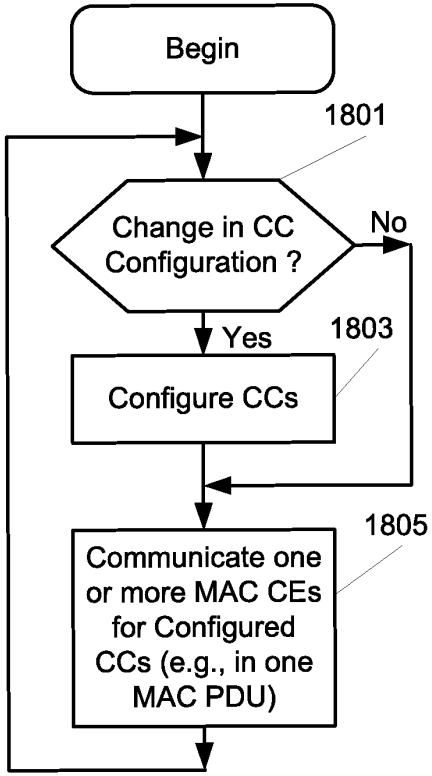

Figure 19A

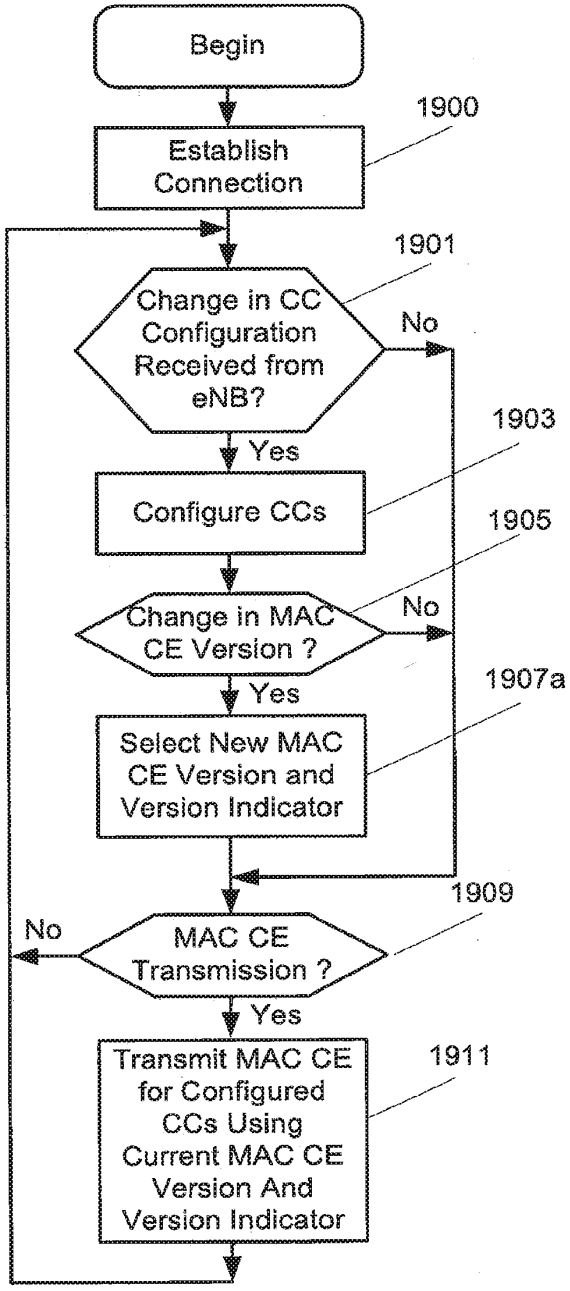
Begin
1900
Establish Connection
1901
Change in CC Configuration Received from eNB?
No
Yes
1903
Configure CCs
1905
Change in MAC CE Version ?
No
Yes
1907a
Select New MAC CE Version and Version Indicator
1909
MAC CE Transmission ?
No
Yes
1911
Transmit MAC CE for Configured CCs Using Current MAC CE Version And Version Indicator

Figure 19B

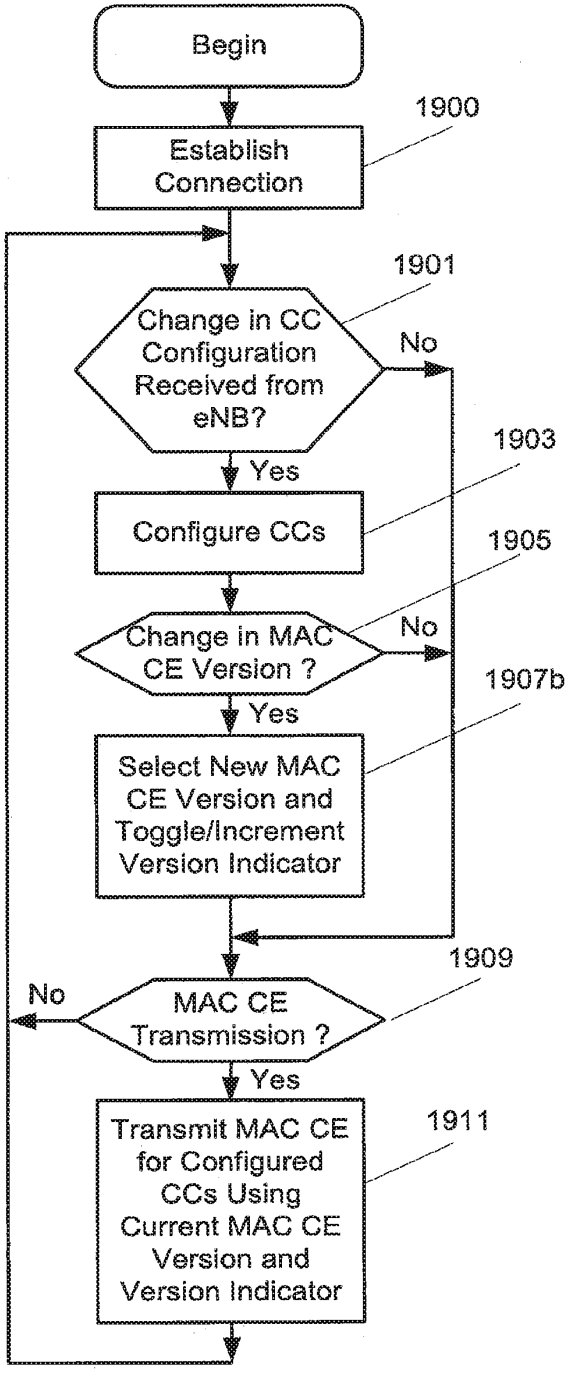
Begin
1900
Establish Connection
1901
Change in CC Configuration Received from eNB?
No
Yes
1903
Configure CCs
1905
Change in MAC CE Version ?
No
Yes
1907b
Select New MAC CE Version and Toggle/Increment Version Indicator
1909
No
MAC CE Transmission ?
Yes
1911
Transmit MAC CE for Configured CCs Using Current MAC CE Version and Version Indicator

Figure 19C

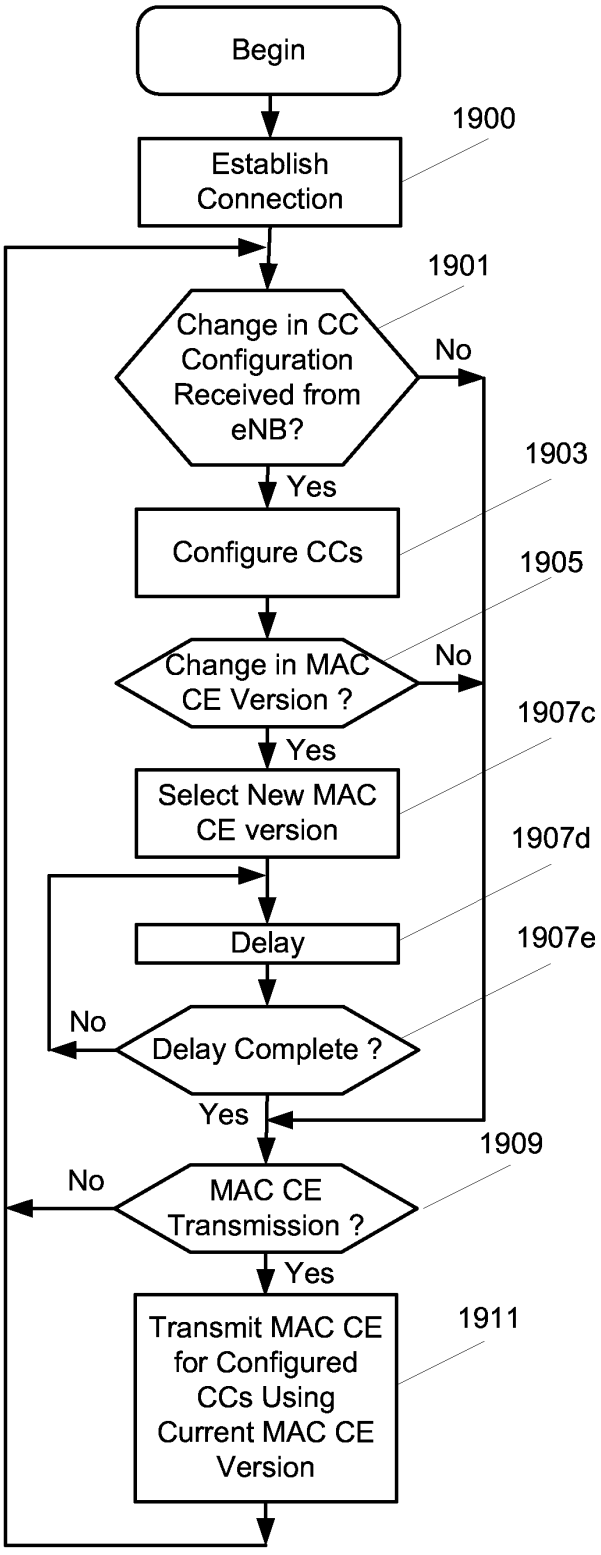
Begin
1900
Establish Connection
1901
Change in CC Configuration Received from eNB?
No
Yes
1903
Configure CCs
1905
Change in MAC CE Version ?
No
Yes
1907c
Select New MAC CE version
1907d
Delay
1907e
Delay Complete ?
No
Yes
1909
MAC CE Transmission ?
No
Yes
1911
Transmit MAC CE for Configured CCs Using Current MAC CE Version

Figure 20

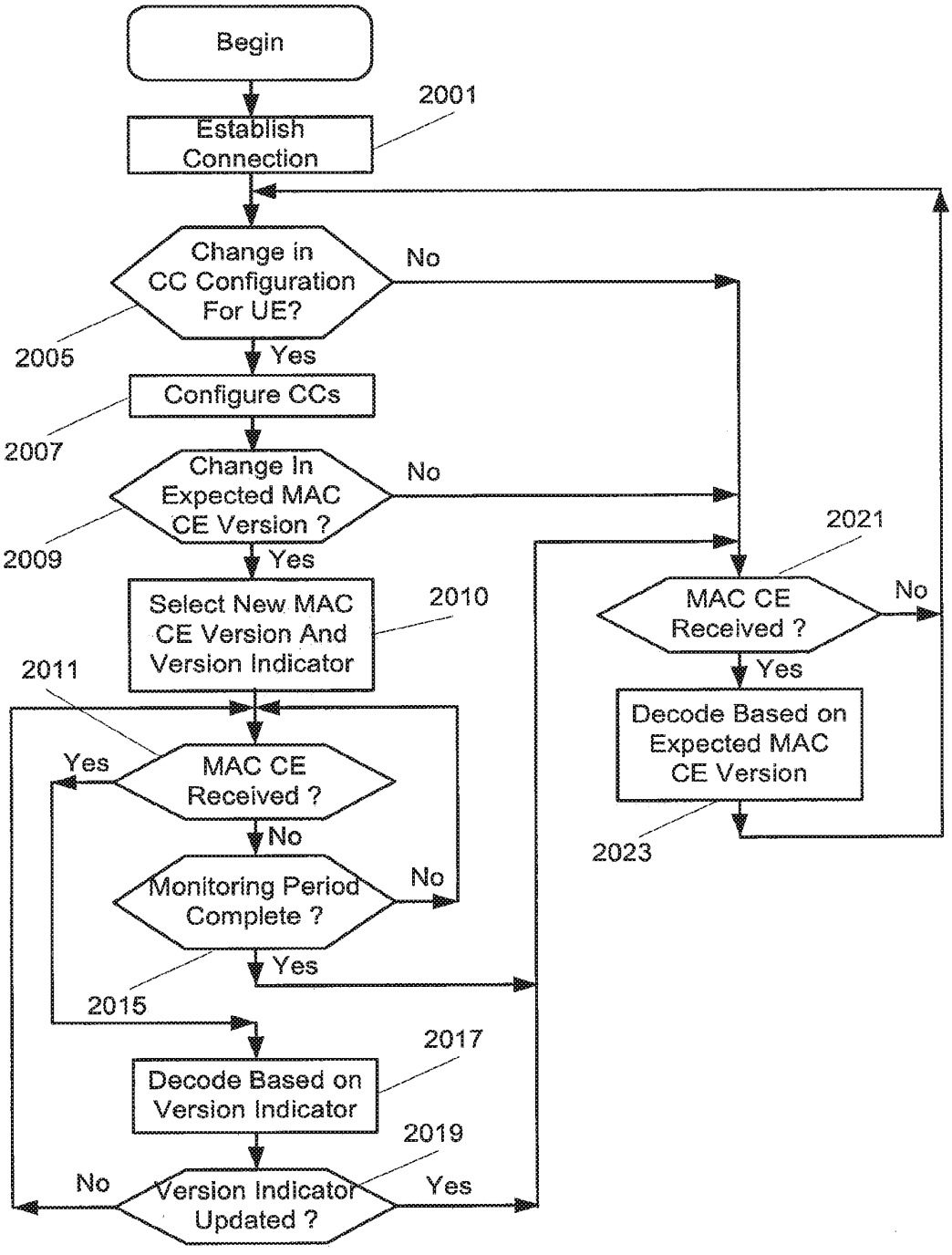

15/17

Figure 21A

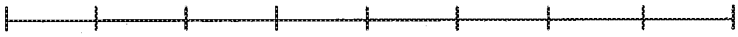

C_7	C_6	C_5	C_4	C_3	C_2	C_1	R=0
P	V	PH (Type 2, PCell)					
R	R	$P_{CMAX,c}$ 1					
P	V	PH (Type 1, PCell)					
R	R	$P_{CMAX,c}$ 2					
P	V	PH (Type 1, SCell 1)					
R	R	$P_{CMAX,c}$ 3					

...

P	V	PH (Type 1, SCell n)
R	R	$P_{CMAX,c}$ m

Figure 21B

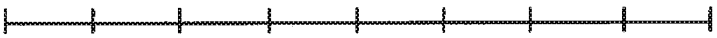

C_7	C_6	C_5	C_4	C_3	C_2	C_1	R=1
C_{15}	C_{14}	C_{13}	C_{12}	C_{11}	C_{10}	C_9	C_8
C_{23}	C_{22}	C_{21}	C_{20}	C_{19}	C_{18}	C_{17}	C_{16}
C_{31}	C_{30}	C_{29}	C_{28}	C_{27}	C_{26}	C_{25}	C_{24}
P	V	PH (Type 2, PCell)					
R	R	$P_{CMAX,c}$ 1					
P	V	PH (Type 1, PCell)					
R	R	$P_{CMAX,c}$ 2					
P	V	PH (Type 2, SCell 1)					
R	R	$P_{CMAX,c}$ 3					
P	V	PH (Type 1, SCell 1)					
R	R	$P_{CMAX,c}$ 4					

...

P	V	PH (Type 2, SCell n)
R	R	$P_{CMAX,c}$ m - 1
P	V	PH (Type 1, SCell m)
R	R	$P_{CMAX,c}$ m

Replaces PTO/AIA/01 (06-12)

DECLARATION (37 CFR 1.63) FOR UTILITY OR DESIGN APPLICATION USING AN APPLICATION DATA SHEET (37 CFR 1.76)	Attorney Docket Number	P45697 WO1

Title of Invention	WIRELESS TERMINALS, NODES OF WIRELESS COMMUNICATION NETWORKS, AND METHODS OF OPERATING THE SAME

As the below named inventor, I hereby declare that:

This declaration is directed to:

☐ The attached application, or

☐ United States application or PCT international application number PCT/SE2015/051191, filed on November 10, 2015

The above-identified application was made or authorized to be made by me.

I believe that I am the original inventor or an original joint inventor of a claimed invention in the application.

I have reviewed and understand the contents of the above identified application, including the claims, as amended by any amendment specifically referred to above.

I am aware of the duty to disclose information which is material to patentability as defined in 37 CFR 1.56, including for continuation-in-part applications, material information which became available between the filing date of the prior application and the national or PCT international filing date of the continuation-in-part application.

I hereby acknowledge that any willful false statement made in this declaration is punishable under 18 U.S.C. 1001 by fine or imprisonment of not more than five (5) years, or both.

LEGAL NAME OF INVENTOR

Inventor: Magnus Stattin Date (Optional):

Signature: 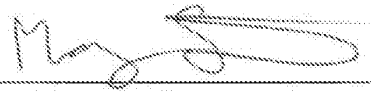

Replaces PTO/AIA/01 (05-12)

DECLARATION (37 CFR 1.63) FOR UTILITY OR DESIGN APPLICATION USING AN APPLICATION DATA SHEET (37 CFR 1.76)	Attorney Docket Number	P45697 WO1

Title of Invention	WIRELESS TERMINALS, NODES OF WIRELESS COMMUNICATION NETWORKS, AND METHODS OF OPERATING THE SAME

As the below named inventor, I hereby declare that:

This declaration is directed to:

☐ The attached application, or

☐ United States application or PCT international application number PCT/SE2015/051191, filed on November 10, 2015

The above-identified application was made or authorized to be made by me.

I believe that I am the original inventor or an original joint inventor of a claimed invention in the application.

I have reviewed and understand the contents of the above identified application, including the claims, as amended by any amendment specifically referred to above.

I am aware of the duty to disclose information which is material to patentability as defined in 37 CFR 1.56, including for continuation-in-part applications, material information which became available between the filing date of the prior application and the national or PCT international filing date of the continuation-in-part application.

I hereby acknowledge that any willful false statement made in this declaration is punishable under 18 U.S.C. 1001 by fine or imprisonment of not more than five (5) years, or both.

LEGAL NAME OF INVENTOR

Inventor: Mattias Tan Bergström Date (Optional):

Signature:

Replaces PTO/AIA/01 (06-12)

DECLARATION (37 CFR 1.63) FOR UTILITY OR DESIGN APPLICATION USING AN APPLICATION DATA SHEET (37 CFR 1.76)	Attorney Docket Number	P45697 WO1

Title of Invention	WIRELESS TERMINALS, NODES OF WIRELESS COMMUNICATION NETWORKS, AND METHODS OF OPERATING THE SAME

As the below named inventor, I hereby declare that:

This declaration is directed to:

☐ The attached application, or

☐ United States application or PCT international application number PCT/SE2015/051191, filed on November 10, 2015

The above-identified application was made or authorized to be made by me.

I believe that I am the original inventor or an original joint inventor of a claimed invention in the application.

I have reviewed and understand the contents of the above identified application, including the claims, as amended by any amendment specifically referred to above.

I am aware of the duty to disclose information which is material to patentability as defined in 37 CFR 1.56, including for continuation-in-part applications, material information which became available between the filing date of the prior application and the national or PCT international filing date of the continuation-in-part application.

I hereby acknowledge that any willful false statement made in this declaration is punishable under 18 U.S.C. 1001 by fine or imprisonment of not more than five (5) years, or both.

LEGAL NAME OF INVENTOR

Inventor: Riikka Susitaival Date (Optional):

Signature: 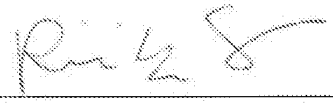

POWER OF ATTORNEY

The undersigned, being a duly authorized representative of **TELEFONAKTIEBOLAGET LM ERICSSON (PUBL)** (hereinafter referred to as "Ericsson") having its registered office at SE-164 83 Stockholm, Sweden, does hereby authorize **Sage Patent Group practitioners associated with United States Patent and Trademark Office Customer Number**

146825

to represent Ericsson before the United States Patent and Trademark Office in any and all matters regarding patents or patent applications filed by Ericsson or wherein Ericsson is the assignee of the entire interest thereto in accordance with 37 CFR 3.73(c).

This Power of Attorney shall include the right for **Sage Patent Group practitioners associated with United States Patent and Trademark Office Customer Number 146825** to sign and submit in Ericsson's name and on Ericsson's behalf any document, notification, filing, petition or request in connection with any patent applications or patents owned by or assigned to Ericsson.

This Power of Attorney does not include the right to appoint substitutes but only the persons associated with the above United States Patent and Trademark Office Customer Number.

We hereby revoke all previous authorization, if any made, in respect of same matter or proceeding. This Power of Attorney may be revoked at any time by Ericsson.

TELEFONAKTIEBOLAGET LM ERICSSON (PUBL)

By: Roger Burleigh

Roger Burleigh
Director U.S. Patent Department, Ericsson

Date: 3/1/17

I, the undersigned, Pamela Kay Ewing **Notary Public of** Texas **, hereby certify that**

Roger Burleigh

duly authorized to sign for

TELEFONAKTIEBOLAGET LM ERICSSON (PUBL)

has issued and signed the foregoing document.

Pamela Kay Ewing

Signature: Notary Public

Pamela Kay Ewing
Notary Public,
State of Texas
Expires 11-14-2018

PATENT APPLICATION FEE DETERMINATION RECORD

Substitute for Form PTO-875

Application or Docket Number: 16/203,450

APPLICATION AS FILED - PART I

FOR	(Column 1) NUMBER FILED	(Column 2) NUMBER EXTRA	SMALL ENTITY RATE($)	SMALL ENTITY FEE($)	OR	OTHER THAN SMALL ENTITY RATE($)	OTHER THAN SMALL ENTITY FEE($)
BASIC FEE (37 CFR 1.16(a), (b), or (c))	N/A	N/A	N/A			N/A	300
SEARCH FEE (37 CFR 1.16(k), (i), or (m))	N/A	N/A	N/A			N/A	660
EXAMINATION FEE (37 CFR 1.16(o), (p), or (q))	N/A	N/A	N/A			N/A	760
TOTAL CLAIMS (37 CFR 1.16(i))	40 minus 20 =	* 20			OR	x 100 =	2000
INDEPENDENT CLAIMS (37 CFR 1.16(h))	8 minus 3 =	* 5				x 460 =	2300
APPLICATION SIZE FEE (37 CFR 1.16(s))	If the specification and drawings exceed 100 sheets of paper, the application size fee due is $310 ($155 for small entity) for each additional 50 sheets or fraction thereof. See 35 U.S.C. 41(a)(1)(G) and 37 CFR 1.16(s).						0.00
MULTIPLE DEPENDENT CLAIM PRESENT (37 CFR 1.16(j))							0.00
* If the difference in column 1 is less than zero, enter "0" in column 2.			TOTAL			TOTAL	6020

APPLICATION AS AMENDED - PART II

		(Column 1) CLAIMS REMAINING AFTER AMENDMENT		(Column 2) HIGHEST NUMBER PREVIOUSLY PAID FOR	(Column 3) PRESENT EXTRA	SMALL ENTITY RATE($)	SMALL ENTITY ADDITIONAL FEE($)	OR	OTHER THAN SMALL ENTITY RATE($)	OTHER THAN SMALL ENTITY ADDITIONAL FEE($)
AMENDMENT A	Total (37 CFR 1.16(i))	*	Minus	**	=	x =		OR	x =	
	Independent (37 CFR 1.16(h))	*	Minus	***	=	x =		OR	x =	
	Application Size Fee (37 CFR 1.16(s))									
	FIRST PRESENTATION OF MULTIPLE DEPENDENT CLAIM (37 CFR 1.16(j))							OR		
						TOTAL ADD'L FEE		OR	TOTAL ADD'L FEE	

		(Column 1) CLAIMS REMAINING AFTER AMENDMENT		(Column 2) HIGHEST NUMBER PREVIOUSLY PAID FOR	(Column 3) PRESENT EXTRA	RATE($)	ADDITIONAL FEE($)	OR	RATE($)	ADDITIONAL FEE($)
AMENDMENT B	Total (37 CFR 1.16(i))	*	Minus	**	=	x =		OR	x =	
	Independent (37 CFR 1.16(h))	*	Minus	***	=	x =		OR	x =	
	Application Size Fee (37 CFR 1.16(s))									
	FIRST PRESENTATION OF MULTIPLE DEPENDENT CLAIM (37 CFR 1.16(j))							OR		
						TOTAL ADD'L FEE		OR	TOTAL ADD'L FEE	

* If the entry in column 1 is less than the entry in column 2, write "0" in column 3.
** If the "Highest Number Previously Paid For" IN THIS SPACE is less than 20, enter "20".
*** If the "Highest Number Previously Paid For" IN THIS SPACE is less than 3, enter "3".
The "Highest Number Previously Paid For" (Total or Independent) is the highest found in the appropriate box in column 1.

UNITED STATES PATENT AND TRADEMARK OFFICE

UNITED STATES DEPARTMENT OF COMMERCE
United States Patent and Trademark Office
Address: COMMISSIONER FOR PATENTS
P.O. Box 1450
Alexandria, Virginia 22313-1450
www.uspto.gov

APPLICATION NUMBER	FILING or 371(c) DATE	GRP ART UNIT	FIL FEE REC'D	ATTY.DOCKET.NO	TOT CLAIMS	IND CLAIMS
16/203,450	11/28/2018		6020	9900-45697US4	40	8

CONFIRMATION NO. 2596

146825
Sage Patent Group/Telefonaktiebolaget LM Ericsson
PO BOX 30789
RALEIGH, NC 27622-0789

FILING RECEIPT

OC000000104333588

Date Mailed: 12/19/2018

Receipt is acknowledged of this non-provisional patent application. The application will be taken up for examination in due course. Applicant will be notified as to the results of the examination. Any correspondence concerning the application must include the following identification information: the U.S. APPLICATION NUMBER, FILING DATE, NAME OF APPLICANT, and TITLE OF INVENTION. Fees transmitted by check or draft are subject to collection. Please verify the accuracy of the data presented on this receipt. **If an error is noted on this Filing Receipt, please submit a written request for a Filing Receipt Correction. Please provide a copy of this Filing Receipt with the changes noted thereon. If you received a "Notice to File Missing Parts" for this application, please submit any corrections to this Filing Receipt with your reply to the Notice. When the USPTO processes the reply to the Notice, the USPTO will generate another Filing Receipt incorporating the requested corrections**

Inventor(s)

Mattias TAN BERGSTRÖM, Stockholm, SWEDEN;
Riikka SUSITAIVAL, Helsinki, FINLAND;
Magnus STATTIN, Upplands Väsby, SWEDEN;

Applicant(s)

Telefonaktiebolaget LM Ericsson (publ), Stockholm, SWEDEN;

Power of Attorney: The patent practitioners associated with Customer Number 146825

Domestic Priority data as claimed by applicant

This application is a CON of 15/678,199 08/16/2017
which is a CON of 14/911,875 02/12/2016 PAT 9787456
which is a 371 of PCT/SE2015/051191 11/10/2015

Foreign Applications for which priority is claimed (You may be eligible to benefit from the **Patent Prosecution Highway** program at the USPTO. Please see http://www.uspto.gov for more information.) - None.
Foreign application information must be provided in an Application Data Sheet in order to constitute a claim to foreign priority. See 37 CFR 1.55 and 1.76.

Permission to Access Application via Priority Document Exchange: Yes

Permission to Access Search Results: Yes

Applicant may provide or rescind an authorization for access using Form PTO/SB/39 or Form PTO/SB/69 as appropriate.

If Required, Foreign Filing License Granted: 12/18/2018

The country code and number of your priority application, to be used for filing abroad under the Paris Convention, is **US 16/203,450**

Projected Publication Date: 03/28/2019

Non-Publication Request: No

Early Publication Request: No
Title

WIRELESS TERMINALS, NODES OF WIRELESS COMMUNICATION NETWORKS, AND METHODS OF OPERATING THE SAME

Preliminary Class

Statement under 37 CFR 1.55 or 1.78 for AIA (First Inventor to File) Transition Applications: No

PROTECTING YOUR INVENTION OUTSIDE THE UNITED STATES

Since the rights granted by a U.S. patent extend only throughout the territory of the United States and have no effect in a foreign country, an inventor who wishes patent protection in another country must apply for a patent in a specific country or in regional patent offices. Applicants may wish to consider the filing of an international application under the Patent Cooperation Treaty (PCT). An international (PCT) application generally has the same effect as a regular national patent application in each PCT-member country. The PCT process **simplifies** the filing of patent applications on the same invention in member countries, but **does not result** in a grant of "an international patent" and does not eliminate the need of applicants to file additional documents and fees in countries where patent protection is desired.

Almost every country has its own patent law, and a person desiring a patent in a particular country must make an application for patent in that country in accordance with its particular laws. Since the laws of many countries differ in various respects from the patent law of the United States, applicants are advised to seek guidance from specific foreign countries to ensure that patent rights are not lost prematurely.

Applicants also are advised that in the case of inventions made in the United States, the Director of the USPTO must issue a license before applicants can apply for a patent in a foreign country. The filing of a U.S. patent application serves as a request for a foreign filing license. The application's filing receipt contains further information and guidance as to the status of applicant's license for foreign filing.

Applicants may wish to consult the USPTO booklet, "General Information Concerning Patents" (specifically, the section entitled "Treaties and Foreign Patents") for more information on timeframes and deadlines for filing foreign patent applications. The guide is available either by contacting the USPTO Contact Center at 800-786-9199, or it can be viewed on the USPTO website at http://www.uspto.gov/web/offices/pac/doc/general/index.html.

For information on preventing theft of your intellectual property (patents, trademarks and copyrights), you may wish to consult the U.S. Government website, http://www.stopfakes.gov. Part of a Department of Commerce initiative, this website includes self-help "toolkits" giving innovators guidance on how to protect intellectual property in specific countries such as China, Korea and Mexico. For questions regarding patent enforcement issues, applicants may call the U.S. Government hotline at 1-866-999-HALT (1-866-999-4258).

LICENSE FOR FOREIGN FILING UNDER

Title 35, United States Code, Section 184

Title 37, Code of Federal Regulations, 5.11 & 5.15

GRANTED

The applicant has been granted a license under 35 U.S.C. 184, if the phrase "IF REQUIRED, FOREIGN FILING LICENSE GRANTED" followed by a date appears on this form. Such licenses are issued in all applications where the conditions for issuance of a license have been met, regardless of whether or not a license may be required as set forth in 37 CFR 5.15. The scope and limitations of this license are set forth in 37 CFR 5.15(a) unless an earlier license has been issued under 37 CFR 5.15(b). The license is subject to revocation upon written notification. The date indicated is the effective date of the license, unless an earlier license of similar scope has been granted under 37 CFR 5.13 or 5.14.

This license is to be retained by the licensee and may be used at any time on or after the effective date thereof unless it is revoked. This license is automatically transferred to any related applications(s) filed under 37 CFR 1.53(d). This license is not retroactive.

The grant of a license does not in any way lessen the responsibility of a licensee for the security of the subject matter as imposed by any Government contract or the provisions of existing laws relating to espionage and the national security or the export of technical data. Licensees should apprise themselves of current regulations especially with respect to certain countries, of other agencies, particularly the Office of Defense Trade Controls, Department of State (with respect to Arms, Munitions and Implements of War (22 CFR 121-128)); the Bureau of Industry and Security, Department of Commerce (15 CFR parts 730-774); the Office of Foreign AssetsControl, Department of Treasury (31 CFR Parts 500+) and the Department of Energy.

NOT GRANTED

No license under 35 U.S.C. 184 has been granted at this time, if the phrase "IF REQUIRED, FOREIGN FILING LICENSE GRANTED" DOES NOT appear on this form. Applicant may still petition for a license under 37 CFR 5.12, if a license is desired before the expiration of 6 months from the filing date of the application. If 6 months has lapsed from the filing date of this application and the licensee has not received any indication of a secrecy order under 35 U.S.C. 181, the licensee may foreign file the application pursuant to 37 CFR 5.15(b).

SelectUSA

The United States represents the largest, most dynamic marketplace in the world and is an unparalleled location for business investment, innovation, and commercialization of new technologies. The U.S. offers tremendous resources and advantages for those who invest and manufacture goods here. Through SelectUSA, our nation works to promote and facilitate business investment. SelectUSA provides information assistance to the international investor community; serves as an ombudsman for existing and potential investors; advocates on behalf of U.S. cities, states, and regions competing for global investment; and counsels U.S. economic development organizations on investment attraction best practices. To learn more about why the United States is the best country in the world to develop technology, manufacture products, deliver services, and grow your business, visit http://www.SelectUSA.gov or call +1-202-482-6800.

UNITED STATES PATENT AND TRADEMARK OFFICE

UNITED STATES DEPARTMENT OF COMMERCE
United States Patent and Trademark Office
Address: COMMISSIONER FOR PATENTS
P.O. Box 1450
Alexandria, Virginia 22313-1450
www.uspto.gov

APPLICATION NUMBER	FILING OR 371(C) DATE	FIRST NAMED APPLICANT	ATTY. DOCKET NO./TITLE
16/203,450	11/28/2018	Mattias TAN BERGSTROM	9900-45697US4

CONFIRMATION NO. 2596

146825
Sage Patent Group/Telefonaktiebolaget LM Ericsson
PO BOX 30789
RALEIGH, NC 27622-0789

PUBLICATION NOTICE

OC000000106952279

Title:WIRELESS TERMINALS, NODES OF WIRELESS COMMUNICATION NETWORKS, AND METHODS OF OPERATING THE SAME

Publication No.US-2019-0097783-A1
Publication Date:03/28/2019

NOTICE OF PUBLICATION OF APPLICATION

The above-identified application will be electronically published as a patent application publication pursuant to 37 CFR 1.211, et seq. The patent application publication number and publication date are set forth above.

The publication may be accessed through the USPTO's publically available Searchable Databases via the Internet at www.uspto.gov. The direct link to access the publication is currently http://www.uspto.gov/patft/.

The publication process established by the Office does not provide for mailing a copy of the publication to applicant. A copy of the publication may be obtained from the Office upon payment of the appropriate fee set forth in 37 CFR 1.19(a)(1). Orders for copies of patent application publications are handled by the USPTO's Public Records Division. The Public Records Division can be reached by telephone at (571) 272-3150 or (800) 972-6382, by facsimile at (571) 273-3250, by mail addressed to the United States Patent and Trademark Office, Public Records Division, Alexandria, VA 22313-1450 or via the Internet.

In addition, information on the status of the application, including the mailing date of Office actions and the dates of receipt of correspondence filed in the Office, may also be accessed via the Internet through the Patent Electronic Business Center at www.uspto.gov using the public side of the Patent Application Information and Retrieval (PAIR) system. The direct link to access this status information is currently https://portal.uspto.gov/pair/PublicPair. Prior to publication, such status information is confidential and may only be obtained by applicant using the private side of PAIR.

Further assistance in electronically accessing the publication, or about PAIR, is available by calling the Patent Electronic Business Center at 1-866-217-9197.

Office of Data Managment, Application Assistance Unit (571) 272-4000, or (571) 272-4200, or 1-888-786-0101

UNITED STATES PATENT AND TRADEMARK OFFICE

UNITED STATES DEPARTMENT OF COMMERCE
United States Patent and Trademark Office
Address: COMMISSIONER FOR PATENTS
P.O. Box 1450
Alexandria, Virginia 22313-1450
www.uspto.gov

APPLICATION NO.	FILING DATE	FIRST NAMED INVENTOR	ATTORNEY DOCKET NO.	CONFIRMATION NO.
16/203,450	11/28/2018	Mattias TAN BERGSTRÖM	9900-45697US4	2596

146825 7590 05/06/2019

Sage Patent Group/Telefonaktiebolaget LM Ericsson
PO BOX 30789
RALEIGH, NC 27622-0789

EXAMINER
DOAN, KIET M

ART UNIT	PAPER NUMBER
2641	

NOTIFICATION DATE	DELIVERY MODE
05/06/2019	ELECTRONIC

Please find below and/or attached an Office communication concerning this application or proceeding.

The time period for reply, if any, is set in the attached communication.

Notice of the Office communication was sent electronically on above-indicated "Notification Date" to the following e-mail address(es):

instructions@sagepat.com

Office Action Summary	**Application No.** 16/203,450	**Applicant(s)** TAN BERGSTRÖM et al.	
	Examiner KIET M DOAN	**Art Unit** 2641	**AIA (FITF) Status** Yes

-- The MAILING DATE of this communication appears on the cover sheet with the correspondence address --

Period for Reply

A SHORTENED STATUTORY PERIOD FOR REPLY IS SET TO EXPIRE 3 MONTHS FROM THE MAILING DATE OF THIS COMMUNICATION.

- Extensions of time may be available under the provisions of 37 CFR 1.136(a). In no event, however, may a reply be timely filed after SIX (6) MONTHS from the mailing date of this communication.
- If NO period for reply is specified above, the maximum statutory period will apply and will expire SIX (6) MONTHS from the mailing date of this communication.
- Failure to reply within the set or extended period for reply will, by statute, cause the application to become ABANDONED (35 U.S.C. § 133). Any reply received by the Office later than three months after the mailing date of this communication, even if timely filed, may reduce any earned patent term adjustment. See 37 CFR 1.704(b).

Status

1)☑ Responsive to communication(s) filed on 11/28/2018.

☐ A declaration(s)/affidavit(s) under **37 CFR 1.130(b)** was/were filed on _____.

2a)☐ This action is **FINAL.** 2b) ☑ This action is non-final.

3)☐ An election was made by the applicant in response to a restriction requirement set forth during the interview on _____; the restriction requirement and election have been incorporated into this action.

4)☐ Since this application is in condition for allowance except for formal matters, prosecution as to the merits is closed in accordance with the practice under *Ex parte Quayle*, 1935 C.D. 11, 453 O.G. 213.

Disposition of Claims*

5) ☑ Claim(s) 1-4,7-12,15-18,20-23 and 25-46 is/are pending in the application.

5a) Of the above claim(s) _____ is/are withdrawn from consideration.

6) ☐ Claim(s) _____ is/are allowed.

7) ☑ Claim(s) 1-4,7-12,15-18,20-23 and 25-46 is/are rejected.

8) ☐ Claim(s) _____ is/are objected to.

9) ☐ Claim(s) _____ are subject to restriction and/or election requirement

* If any claims have been determined allowable, you may be eligible to benefit from the **Patent Prosecution Highway** program at a participating intellectual property office for the corresponding application. For more information, please see http://www.uspto.gov/patents/init_events/pph/index.jsp or send an inquiry to **PPHfeedback@uspto.gov.**

Application Papers

10)☐ The specification is objected to by the Examiner.

11)☑ The drawing(s) filed on 11/28/2018 is/are: a)☑ accepted or b)☐ objected to by the Examiner.

Applicant may not request that any objection to the drawing(s) be held in abeyance. See 37 CFR 1.85(a).

Replacement drawing sheet(s) including the correction is required if the drawing(s) is objected to. See 37 CFR 1.121(d).

Priority under 35 U.S.C. § 119

12)☐ Acknowledgment is made of a claim for foreign priority under 35 U.S.C. § 119(a)-(d) or (f).

Certified copies:

a)☐ All b)☐ Some** c)☐ None of the:

1.☐ Certified copies of the priority documents have been received.

2.☐ Certified copies of the priority documents have been received in Application No. _____.

3.☐ Copies of the certified copies of the priority documents have been received in this National Stage application from the International Bureau (PCT Rule 17.2(a)).

** See the attached detailed Office action for a list of the certified copies not received.

Attachment(s)

1) ☑ Notice of References Cited (PTO-892)

2) ☑ Information Disclosure Statement(s) (PTO/SB/08a and/or PTO/SB/08b) Paper No(s)/Mail Date _____.

3) ☐ Interview Summary (PTO-413) Paper No(s)/Mail Date _____.

4) ☐ Other: _____.

DETAILED ACTION

Notice of Pre-AIA or AIA Status

The present application, filed on or after March 16, 2013, is being examined under the first inventor to file provisions of the AIA.

Information Disclosure Statement

The information disclosure statement (IDS) submitted on 11/28/2018. The submission is in compliance with the provisions of 37 CFR 1.97. Accordingly, the information disclosure statement is being considered by the examiner.

Drawings

The drawings were received on 11/28/2018 these drawing are acceptable by the examiner.

Double Patenting

The nonstatutory double patenting rejection is based on a judicially created doctrine grounded in public policy (a policy reflected in the statute) so as to prevent the unjustified or improper timewise extension of the "right to exclude" granted by a patent and to prevent possible harassment by multiple assignees. A nonstatutory obviousness-type double patenting rejection is appropriate where the conflicting claims are not identical, but at least one examined application claim is not patentably distinct from the reference claim(s) because the examined application claim is either anticipated by, or would have been obvious over, the reference claim(s). See, e.g., *In re Berg*, 140 F.3d 1428, 46 USPQ2d 1226 (Fed. Cir. 1998); *In re Goodman*, 11 F.3d 1046, 29 USPQ2d 2010 (Fed. Cir. 1993); *In re Longi*, 759 F.2d 887, 225 USPQ 645 (Fed. Cir. 1985); *In re Van Ornum*, 686 F.2d 937, 214 USPQ 761 (CCPA 1982); *In re Vogel*, 422 F.2d 438, 164 USPQ 619 (CCPA 1970); and *In re Thorington*, 418 F.2d 528, 163 USPQ 644 (CCPA 1969).

A timely filed terminal disclaimer in compliance with 37 CFR 1.321(c) or 1.321(d) may be used to overcome an actual or provisional rejection based on a nonstatutory double patenting ground provided the conflicting application or patent either is shown to

be commonly owned with this application, or claims an invention made as a result of activities undertaken within the scope of a joint research agreement.

Effective January 1, 1994, a registered attorney or agent of record may sign a terminal disclaimer. A terminal disclaimer signed by the assignee must fully comply with 37 CFR 3.73(b).

Claims 1, 9, 17, 22, 27, 32, 37 and 42 are rejected on the ground of nonstatutory obviousness-type double patenting as being unpatentable over claims 1-3 and 21 of US Patent 9,787,456 B2 and claims 1, 12, 23 and 25 of US Patent 10,177,892 B2. Although the conflicting claims are not identical, they are not patentably distinct from each other because claims 1-3 and 21 of US Patent 9,787,456 B2 and claims 1, 12, 23 and 25 of US Patent 10,177,892 B2 with obvious wording variation such as they all drawn to receiving a first Medium Access Control (MAC) Control Element (CE) from the wireless communication network, wherein the first MAC CE includes a first bit map having a first bit map size with bits of the first bit map.

16/203,450	**9,787,456 B2**	**10,177,892 B2**
1, 9, 17, 22, 27, 32, 37 and 42. (Previously Presented) A method of operating a wireless terminal in communication with a wireless communication network, the method comprising: receiving a first Medium Access Control (MAC) Control Element (CE) from the wireless communication network, wherein the first MAC CE	1-3 and 21. A method of operating a wireless terminal in communication with a wireless communication network, the method comprising: configuring a first group of component carriers for a communication link between the wireless terminal and the communication network; while configured with the first group of component carriers, communicating a first Medium Access Control (MAC) Control Element (CE) between the wireless terminal and the wireless communication	1, 12, 23 and 25. A method of operating a wireless terminal in communication with a wireless communication network, the method comprising: configuring a first group of component carriers for a communication link between the wireless terminal and the wireless communication network; while configured with the first group of component carriers, receiving a first Activation/Deactivation Medium Access Control (MAC) Control Element (CE) from the wireless communication network,

includes a first bit map having a first bit map size with bits of the first bit map corresponding to respective component carriers of a first group of component carriers and indicating an activation status of the respective component carriers of the first group; and receiving a second MAC CE from the wireless communication network, wherein the second MAC CE includes a second bit map having a second bit map size with bits of the second bit map corresponding to respective component carriers of a second group of component carriers and indicating an activation status of the respective component carriers of the second group, and wherein the first bit map size of the first bit map is different than the second bit map size of the second bit map.	network, wherein the first MAC CE includes a first bit map having a first bit map size with bits of the first bit map corresponding to respective component carriers of the first group of component carriers; configuring a second group of component carriers for the communication link between the wireless terminal and the communication network wherein the first group of component carriers is different than the second group of component carriers; and while configured with the second group of component carriers, communicating a second MAC CE between the wireless terminal and the wireless communication network, wherein the second MAC CE includes a second bit map having a second bit map size with bits of the second bit map corresponding to respective component carriers of the second group of component carriers, and wherein the first bit map size of the first bit map is different than the second bit map size of the second bit map.	wherein the first Activation/Deactivation MAC CE includes a first bit map having a first bit map size with bits of the first bit map corresponding to respective component carriers of the first group of component carriers and indicating an activation status of the respective component carriers of the first group; configuring a second group of component carriers for the communication link between the wireless terminal and the wireless communication network wherein the first group of component carriers is different than the second group of component carriers; and while configured with the second group of component carriers, receiving a second Activation/Deactivation MAC CE from the wireless communication network, wherein the second Activation/Deactivation MAC CE includes a second bit map having a second bit map size with bits of the second bit map corresponding to respective component carriers of the second group of component carriers and indicating an activation status of the respective component carriers of the second group, and wherein the

		first bit map size of the first bit map is different than the second bit map size of the second bit map.

Claims 2-4, 7-8, 10-12, 15-16, 18, 20-21, 23, 25-26, 28-31, 33-36, 38-41 and 43-46 are rejection under Double Patent as being dependent directly or indirectly to the independent claims 1, 9, 17, 22, 27, 32, 37 and 42.

It is important to note that claimed features recited in claims 11-3 and 21 of US Patent 9,787,456 B2 and claims 1, 12, 23 and 25 of US Patent 10,177,892 B2 are more specific than claimed features recited in claims 1, 9, 17, 22, 27, 32, 37 and 42 of the instant application. Hence, the scope of claims of present application is now broader than U.S. Patent No. 9,787,456 B2 and 10,177,892 B2.

Many decisions support the fact that a broad or generic claim is obvious from a specific claim, i.e., an obvious variation. See In re Van Ornum and Stang, 214 USPQ 761 (CCPA 1982); In re Goodman (CA FC) 29 USPQ2d 2010 (12/3/1993); In re Vogel and Vogel; 164 USPQ 619 (CCPA 1970); In re Berg (CA FC) 46 USPQ2d 1226 (3/30/1998); Eli Lilly and Co. v. Barr Laboratories Inc., 58 USPQ2d 1865 (CA FC 2001). It is well settled that omission of an element and its function in a combination is an obvious expedient if the remaining elements perform the same functions as before. This notion is supported by In re KARLSON, 136 USPQ 184 (1963); In re Nelson, 95 USPQ 82 (CCPA 1952); and In re Eliot, 25 USPQ 111 (CCPA 1935).

Conclusion

Any inquiry concerning this communication or earlier communications from the examiner should be directed to KIET M DOAN whose telephone number is (571)272-7863. The examiner can normally be reached on M-F 9:30am-5:30pm.

Examiner interviews are available via telephone, in-person, and video conferencing using a USPTO supplied web-based collaboration tool. To schedule an interview, applicant is encouraged to use the USPTO Automated Interview Request (AIR) at http://www.uspto.gov/interviewpractice.

If attempts to reach the examiner by telephone are unsuccessful, the examiner's supervisor, Charles Appiah can be reached on 571-272-7904. The fax phone number for the organization where this application or proceeding is assigned is 571-273-8300.

Information regarding the status of an application may be obtained from the Patent Application Information Retrieval (PAIR) system. Status information for published applications may be obtained from either Private PAIR or Public PAIR. Status information for unpublished applications is available through Private PAIR only. For more information about the PAIR system, see http://pair-direct.uspto.gov. Should you have questions on access to the Private PAIR system, contact the Electronic Business Center (EBC) at 866-217-9197 (toll-free). If you would like assistance from a USPTO Customer Service Representative or access to the automated information system, call 800-786-9199 (IN USA OR CANADA) or 571-272-1000.

/KIET M DOAN/
Primary Examiner, Art Unit 2641

Notice of References Cited	Application/Control No. 16/203,450	Applicant(s)/Patent Under Reexamination TAN BERGSTRÖM et al.	
	Examiner KIET M DOAN	Art Unit 2641	Page 1 of 1

U.S. PATENT DOCUMENTS

*		Document Number Country Code-Number-Kind Code	Date MM-YYYY	Name	CPC Classification	US Classification
*	A	US-20160127107-A1	05-2016	Zhang; Hongping	H04L5/001	370/329
*	B	US-20130242790-A1	09-2013	KWON; Ki Bum	H04W28/06	370/252
	C					
	D					
	E					
	F					
	G					
	H					
	I					
	J					
	K					
	L					
	M					

FOREIGN PATENT DOCUMENTS

*		Document Number Country Code-Number-Kind Code	Date MM-YYYY	Country	Name	CPC Classification
	N					
	O					
	P					
	Q					
	R					
	S					
	T					

NON-PATENT DOCUMENTS

*		Include as applicable: Author, Title Date, Publisher, Edition or Volume, Pertinent Pages)
	U	
	V	
	W	
	X	

*A copy of this reference is not being furnished with this Office action. (See MPEP § 707.05(a).)
Dates in MM-YYYY format are publication dates. Classifications may be US or foreign.

Index of Claims	Application/Control No.	Applicant(s)/Patent Under Reexamination
	16/203,450	TAN BERGSTRÖM et al.
	Examiner	**Art Unit**
	KIET M DOAN	2641

✓	Rejected	-	Cancelled	N	Non-Elected	A	Appeal
=	Allowed	÷	Restricted	I	Interference	O	Objected

CLAIMS										
☐ Claims renumbered in the same order as presented by applicant					☐ CPA		☐ T.D.		☐ R.1.47	
CLAIM		**DATE**								
Final	Original	04/30/2019								
	1	✓								
	2	✓								
	3	✓								
	4	✓								
	5	-								
	6	-								
	7	✓								
	8	✓								
	9	✓								
	10	✓								
	11	✓								
	12	✓								
	13	-								
	14	-								
	15	✓								
	16	✓								
	17	✓								
	18	✓								
	19	-								
	20	✓								
	21	✓								
	22	✓								
	23	✓								
	24	-								
	25	✓								
	26	✓								
	27	✓								
	28	✓								
	29	✓								
	30	✓								
	31	✓								
	32	✓								
	33	✓								
	34	✓								
	35	✓								
	36	✓								
	37	✓								
	38	✓								
	39	✓								
	40	✓								
	41	✓								
	42	✓								

Index of Claims	Application/Control No.	Applicant(s)/Patent Under Reexamination
	16/203,450	TAN BERGSTRÖM et al.
	Examiner	Art Unit
	KIET M DOAN	2641

CLAIM		DATE								
Final	Original	04/30/2019								
	43	✓								
	44	✓								
	45	✓								
	46	✓								

Search Notes	Application/Control No.	Applicant(s)/Patent Under Reexamination
	16/203,450	TAN BERGSTRÖM et al.
	Examiner	Art Unit
	KIET M DOAN	2641

CPC - Searched*		
Symbol	**Date**	**Examiner**
H04L5/001	05/01/2019	KD
H04L1/1614	05/01/2019	KD
H04W72/0413	05/01/2019	KD

CPC Combination Sets - Searched*		
Symbol	**Date**	**Examiner**

US Classification - Searched*			
Class	**Subclass**	**Date**	**Examiner**
370	329	05/01/2019	KD
	336	05/01/2019	KD
	252	05/01/2019	KD
455	509	05/01/2019	KD
	422.1	05/01/2019	KD
	501	05/01/2019	KD
	450	05/01/2019	KD

* See search history printout included with this form or the SEARCH NOTES box below to determine the scope of the search.

/KIET M DOAN/ Primary Examiner, Art Unit 2641	

Search Notes	Application/Control No.	Applicant(s)/Patent Under Reexamination
	16/203,450	TAN BERGSTRÖM et al.
	Examiner	**Art Unit**
	KIET M DOAN	2641

Search Notes		
Search Notes	**Date**	**Examiner**
Inventor search		
East search		
((medium near access near control) mac) same ((control near element) ce) and ((component near carrier$1) carrier$1) and ((medium near access near control) mac) and ((control near element) ce) and bit$3 with map$3 with (size amount value$1) and carrier$1 with (active activat$3). clm.		
((medium near access near control) mac) same ((control near element) ce) and group$3 with ((component near carrier$1) carrier$1) with (active activat$3) and second with ((medium near access near control) mac) and ((control near element) ce) and bit$3 with map$3 with (size amount value$1) and different$1 with bit$3 with map$3 and bit$3 near2 map$3		
((H04L1/1614 OR H04L5/001 OR H04L5/0098).CPC.)		
((H04L5/001 OR H04L5/0098 OR H04L1/1614 OR H04L1/0026).CPC.)		
((medium near access near control) mac) same ((control near element) ce) and ((component near carrier$1) carrier$1) and ((medium near access near control) mac) and ((control near element) ce) and bit$3 with map$3 with (size amount value$1) and carrier$1 with (active activat$3). clm.		

Interference Search			
US Class/CPC Symbol	**US Subclass/CPC Group**	**Date**	**Examiner**
375	240	05/01/2019	KD

/KIET M DOAN/ Primary Examiner, Art Unit 2641	

INFORMATION DISCLOSURE STATEMENT BY APPLICANT *(use as many sheets as necessary)*				***Complete if Known***	
				Application Number	Not Yet Known
				Filing Date	Herewith 11/28/2018
				First Named Inventor	TAN BERGSTRÖM
				Art Unit	Not Yet Known
				Examiner Name	Not Yet Known Kiet Doan
Sheet	**1**	of	**2**	Attorney Docket Number	9900-45697US4

U.S. PATENT DOCUMENTS					
Examiner Initials*	Cite No.	Document Number Number-Kind Code (if known)	Publication Date MM-DD-YYYY	Name of Patentee or Applicant of Cited Document	Pages, Columns, Lines, Where Relevant Passages or Relevant Figures Appear
	1.	US- 8730829	05-20-2014	Hwang, et al.	
	2.	US- 8798663	08-05-2014	Wang, et al.	
	3.	US- 8811322	08-19-2014	Feuersanger, et al.	
	4.	US- 9402255	07-26-2016	LOHR, et al.	
	5.	US 9642161	05-02-2017	WU, et al.	
	6.	US 2013/0114576	05-09-2013	Kwon, et al.	
	7.	US 2013/0215866	08-22-2013	Ahn, et al.	
	8.	US 9210671	12-08-2015	Bostrom, et al.	
	9.	US 2012/0224552	09-06-2012	Feuersanger	
	10.	US 20120083308	04-05-2012	Wang	

FOREIGN PATENT DOCUMENTS						
Examiner Initials*	Cite No.	Foreign Patent Document Country Code, Number, Kind Code (if known)	Publication Date MM-DD-YYYY	Name of Patentee or Applicant of Cited Document	Pages, Columns, Lines, Where Relevant Passages or Relevant Figures Appear	T
	1.	WO 2012/165821	12-06-2012	Pantech Co., Ltd.		
	2.	WO 2013/115263	08-08-2013	NTT Docomo Inc.		
	3.	WO 2011/159222	12-22-2011	Bostroem, et al.		
	4.	WO 2012/111980	08-23-2012	Kim, et al.		
	5.	WO 2013/025547	02-21-2013	Shin, et al.		
	6.	JPA 2015-516695	06-11-2015	Pantech Co., Ltd.		
	7.	JPA 2013-179551	09-09-2013	NTT Docomo Inc.		
	8.	EP 2317815	05-04-2011	Feuersaenger, et al.		
	9.	EP 2693820	02-05-2014	Li, et al.		
	10.	RU 2013102306 A	07-27-2014	Telefonaktiebolaget LM Ericsson (PUBL)		
	11.	RU 2510595 C2	03-27-2014	Acer Incorporated		

NON PATENT LITERATURE DOCUMENTS			
Examiner Initials*	Cite No.	Include name of the author (in CAPITAL LETTERS), title of the article (when appropriate), title of the item (book, magazine, journal, serial, symposium, catalog, etc.), date, page(s), volume-issue number(s), publisher, city and/or country where published	T
	1.	Nokia Siemens Networks et al., "PHR remaining issues", Agenda Item 7.1.1.6, Document for: Discussion and Decision, 3GPP TSG-RAN WG2 Meeting #71 bis, R2-105379, Xian, China, October 11-15, 2010, 8 pp.	
	2.	International Search Report and Written Opinion of the International Searching Authority, Application No. PCT/SE2015/051191, 02-25-2016	
	3.	Ericsson, "Running MAC CR for Carrier Aggregation enhancements", Change Request, 3GPP TSG-RAN WG2 Meeting #91 bis, R2-154910, Malmo, Sweden, October 5-9, 2015, 75 pp.	
	4.	3GPP, Technical Specification - "3rd Generation Partnership Project; Technical Specification Group Radio Access Network; Evolved Universal Terrestrial Radio Access (E-UTRA); Radio Resource Control (RRC); Protocol specification (Release 12)", 3GPP TS 36.331 V12.4.1 (2014-12), 410 pp.	

Examiner Signature	/KIET M DOAN/	Date Considered	05/01/2019

*EXAMINER: Initial if reference considered, whether or not citation is in conformance with MPEP 609. Draw line through citation if not in conformance and not considered. Include copy of this form with next communication to applicant.

ALL REFERENCES CONSIDERED EXCEPT WHERE LINED THROUGH. /K.M.D/

INFORMATION DISCLOSURE STATEMENT BY APPLICANT *(use as many sheets as necessary)*				*Complete if Known*	
				Application Number	Not Yet Known
				Filing Date	Herewith 11/18/2018
				First Named Inventor	TAN BERGSTRÖM
				Art Unit	Not Yet Known
				Examiner Name	Not Yet Known Kiet Doan
Sheet	**2**	of	**2**	Attorney Docket Number	9900-45697US4

	5.	3GPP, Technical Specification - "3rd Generation Partnership Project; Technical Specification Group Radio Access Network; Evolved Universal Terrestrial Radio Access (E-UTRA); Medium Access Control (MAC) protocol specification (Release 12)", 3GPP TS 36.321 V12.3.0 (2014-09), 57 pp.	
	6.	3GPP, Technical Specification - "3rd Generation Partnership Project; Technical Specification Group Radio Access Network; Evolved Universal Terrestrial Radio Access (E-UTRA); Physical layer procedures (Release 12)", 3GPP TS 36.213 V12.4.0 (2014-12), 225 pp.	
	7.	3GPP, Technical Specification - "3rd Generation Partnership Project; Technical Specification Group Radio Access Network; Evolved Universal Terrestrial Radio Access (E-UTRA); Requirements for support of radio resource management (Release 12)", 3GPP TS 36.133 V12.6.0 (2014-12), 992 pp.	
	8.	3GPP, Technical Specification - "3rd Generation Partnership Project; Technical Specification Group Radio Access Network; Evolved Universal Terrestrial Radio Access (E-UTRA); User Equipment (UE) radio transmission and reception (Release 12)", 3GPP TS 36.101 V12.6.0 (2014-12), 589 pp.	
	9.	"MAC CE impact due to CA enhancements," 3GPP TSG-RAN WG2 #89bis, Bratislava, Slovakia, April 20-24, 2015, Agenda Item 7.2.3, Ericsson (Tdoc R2-151506) 6 pages.	
	10.	"New format for Activation/Deactivation MAC Control Element," 3GPP TSG RAN WG2 #89bis, April 20-24, 2015, Bratislava, Slovakia, Agenda Item 7.2.3, Samsung (R2-151620) 2 pages.	
	11.	Japanese Office Action mailed October 5, 2018, Application No. 2017-535645 (Japanese-language document, 3 pages) and English-language Summary of the Office Action, 2 pages.	
	12.	Search Report (English-Language Translation) Russian Patent Application No. 20171284585/07 (049226) March 6, 2018, 2 pages.	

ALL REFERENCES CONSIDERED EXCEPT WHERE LINED THROUGH. /K.M.D/

Examiner Signature	/KIET M DOAN/	Date Considered	05/01/2019

*EXAMINER: Initial if reference considered, whether or not citation is in conformance with MPEP 609. Draw line through citation if not in conformance and not considered. Include copy of this form with next communication to applicant.

EAST Search History

EAST Search History (Prior Art)

Ref #	Hits	Search Query	DBs	Default Operator	Plurals	Time Stamp
L4	572	receiv$3 with ((medium near access near control) mac) same ((control near element) ce) and ((component near carrier$1) carrier$1) and ((medium near access near control) mac) and ((control near element) ce) and bit$3 with map$3 and carrier$1	US-PGPUB; USPAT; USOCR; FPRS; EPO; JPO; DERWENT; IBM_TDB	OR	OFF	2019/05/01 09:34
L5	1135	((medium near access near control) mac) same ((control near element) ce) and ((component near carrier$1) carrier$1) and ((medium near access near control) mac) and ((control near element) ce) and bit$3 with map$3 and carrier$1	US-PGPUB; USPAT; USOCR; FPRS; EPO; JPO; DERWENT; IBM_TDB	OR	OFF	2019/05/01 09:34
L6	27	receiv$3 with ((medium near access near control) mac) same ((control near element) ce) and ((component near carrier$1) carrier$1) and ((medium near access near control) mac) and ((control near element) ce) and bit$3 with map$3 with (size amount value$1) and carrier$1 with (active activat$3).clm.	US-PGPUB; USPAT; USOCR; FPRS; EPO; JPO; DERWENT; IBM_TDB	OR	OFF	2019/05/01 09:36
L7	13	receiv$3 with ((medium near access near control) mac) same ((control near element) ce) and ((component near carrier$1) carrier$1) and second with ((medium near access near control) mac) and ((control near element) ce) and bit$3 with map$3 with (size amount value$1) and carrier$1 with (active activat$3) and different with bit$3 with map$3	US-PGPUB; USPAT; USOCR; FPRS; EPO; JPO; DERWENT; IBM_TDB	OR	OFF	2019/05/01 10:21
L8	5	receiv$3 with ((medium near access near control) mac) same ((control near element) ce) and ((component near carrier$1) carrier$1) and second with ((medium near access near control) mac) and ((control near element) ce) and bit$3 with map$3 with (size amount value$1) and group$3 with carrier$1 with (active activat$3) and different with bit$3 with map$3	US-PGPUB; USPAT; USOCR; FPRS; EPO; JPO; DERWENT; IBM_TDB	OR	OFF	2019/05/01 10:26
L9	5	((medium near access near control) mac) same ((control near element) ce) and group$3 with ((component near carrier$1) carrier$1) with (active activat$3) and second with ((medium near access near control) mac) and ((control near element) ce) and bit$3 with map$3 with (size amount value$1) and different$1 with bit$3 with map$3 and bit$3 near2 map$3	US-PGPUB; USPAT; USOCR; FPRS; EPO; JPO; DERWENT; IBM_TDB	OR	OFF	2019/05/01 10:29

L10	12	((medium near access near control) mac) same ((control near element) ce) and ((component near carrier$1) carrier$1) with (active activat$3) and second with ((medium near access near control) mac) and ((control near element) ce) and bit$3 with map$3 with (size amount value$1) and different$1 with bit$3 with map$3 and bit$3 near2 map$3	US-PGPUB; USPAT; USOCR; FPRS; EPO; JPO; DERWENT; IBM_TDB	OR	OFF	2019/05/01 10:31
L11	8	("20120176926" | "20130114577" | "20140023055" | "20140029575" | "20140308921" | "20150099501" | "20150373559" | "20160157219").PN.	US-PGPUB; USPAT; USOCR	OR	OFF	2019/05/01 10:32
L12	5	((medium near access near control) mac) same ((control near element) ce) and ((component near carrier$1) carrier$1) with (active activat$3) and ((medium near access near control) mac) and ((control near element) ce) and bit$3 with map$3 with (size amount value$1) and different$1 with bit$3 with map$3 and bit$3 near2 map$3.clm.	US-PGPUB; USPAT; USOCR; FPRS; EPO; JPO; DERWENT; IBM_TDB	OR	OFF	2019/05/01 10:36
L13	5	12 AND ((H04L1/1614 OR H04L5/001 OR H04L5/0098).CPC.)	US-PGPUB; USPAT; USOCR; FPRS; EPO; JPO; DERWENT; IBM_TDB	OR	OFF	2019/05/01 10:37
L14	23	6 AND ((H04L5/001 OR H04L5/0098 OR H04L1/1614 OR H04L1/0026).CPC.)	US-PGPUB; USPAT; USOCR; FPRS; EPO; JPO; DERWENT; IBM_TDB	OR	OFF	2019/05/01 10:40
L15	28	((medium near access near control) mac) same ((control near element) ce) and ((component near carrier$1) carrier$1) and ((medium near access near control) mac) and ((control near element) ce) and bit$3 with map$3 with (size amount value$1) and carrier$1 with (active activat$3).clm.	US-PGPUB; USPAT; USOCR; FPRS; EPO; JPO; DERWENT; IBM_TDB	OR	OFF	2019/05/01 10:44
L16	289	receiv$3 with ((medium near access near control) mac) same ((control near element) ce) and ((component near carrier$1) carrier$1) and (plurality multiple second) with ((medium near access near control) mac) and ((control near element) ce) and bit$3 with map$3 and carrier$1 and bit$3 near3 map$3	US-PGPUB; USPAT; USOCR; FPRS; EPO; JPO; DERWENT; IBM_TDB	OR	OFF	2019/05/01 10:49
L17	18	receiv$3 with ((medium near access near control) mac) same ((control near element) ce) and ((component near carrier$1) carrier$1) and (plurality multiple second) with ((medium near access near control) mac) and ((control near element) ce) and bit$3 with map$3 and carrier$1 and bit$3 near3 map$3.clm.	US-PGPUB; USPAT; USOCR; FPRS; EPO; JPO; DERWENT; IBM_TDB	OR	OFF	2019/05/01 10:50

S1	25	(communicat$3 connect$3) with between with (mobile wireless $4phone) and (communicat$3 connect$3) with ((medium near access near control) mac (control near element) ce) and bit$3 near map$3 with size$1 and carrier$1	US-PGPUB; USPAT; USOCR; FPRS; EPO; JPO; DERWENT; IBM_TDB	OR	OFF	2017/01/04 00:03
S2	9	(communicat$3 connect$3) with between with (mobile wireless $4phone) and (communicat$3 connect$3) with ((medium near access near control) mac) same ((control near element) ce) and bit$3 near map$3 with size$1	US-PGPUB; USPAT; USOCR; FPRS; EPO; JPO; DERWENT; IBM_TDB	OR	OFF	2017/01/04 00:12
S3	1	("20120083308").PN.	US-PGPUB; USPAT	OR	OFF	2017/01/04 12:08
S4	1	("20120083308").PN.	US-PGPUB; USPAT	OR	OFF	2017/01/04 12:10
S5	1	("20120083308").PN.	US-PGPUB; USPAT	OR	OFF	2017/01/04 12:10
S6	2	"20130215866"	US-PGPUB; USPAT; USOCR; FPRS; EPO; JPO; DERWENT; IBM_TDB	OR	OFF	2017/01/04 12:10
S7	7	"20120082043"	US-PGPUB; USPAT; USOCR; FPRS; EPO; JPO; DERWENT; IBM_TDB	OR	OFF	2017/01/04 12:11
S8	4	"7116976".pn.	US-PGPUB; USPAT; USOCR; FPRS; EPO; JPO; DERWENT; IBM_TDB	OR	OFF	2017/01/04 15:22
S9	3	group$3 with (component near carrier$1) with (mobile wireless $4phone ue) same ((medium near access near control) mac) same ((control near element) ce) and bit$3 near map$3 with size$1 and (second different$1) with group$3 with (component near carrier$1) and ((medium near access near control) mac) same ((control near element) ce)	US-PGPUB; USPAT; USOCR; FPRS; EPO; JPO; DERWENT; IBM_TDB	OR	OFF	2017/01/04 15:44
S10	15	group$3 with (component near carrier$1) with (mobile wireless $4phone ue) and ((medium near access near control) mac) same ((control near element) ce) and bit$3 near map$3 and (second different$1) with group$3 with (component near carrier$1)	US-PGPUB; USPAT; USOCR; FPRS; EPO; JPO; DERWENT; IBM_TDB	OR	OFF	2017/01/04 15:48
S11	15	group$3 with (component near carrier$1) with (mobile wireless $4phone ue) and ((medium near access near control) mac)	US-PGPUB; USPAT; USOCR;	OR	OFF	2017/01/04 15:59

		same ((control near element) ce) and bit$3 near map$3 and (second different$1) with group$3 with (component near carrier$1) and (component near carrier$1)	FPRS; EPO; JPO; DERWENT; IBM_TDB			
S12	14	S11 AND ((H04W52/281 OR H04W52/327 OR H04W52/365 OR H04W36/30 OR H04W56/0005 OR H04W88/12 OR H04L5/0098 OR H04L5/0055 OR H04L1/1614 OR H04L61/6022).CPC.)	US-PGPUB; USPAT; USOCR; FPRS; EPO; JPO; DERWENT; IBM_TDB	OR	OFF	2017/01/04 16:15
S13	3	"20130288751"	US-PGPUB; USPAT; USOCR; FPRS; EPO; JPO; DERWENT; IBM_TDB	OR	OFF	2017/01/04 16:29
S14	35	group$3 and (component near carrier$1) with (mobile wireless $4phone ue) and ((medium near access near control) mac) same ((control near element) ce) and bit$3 near map$3 with (size value$1 amount$1)	US-PGPUB; USPAT; USOCR; FPRS; EPO; JPO; DERWENT; IBM_TDB	OR	OFF	2017/01/04 16:38
S15	8	group$3 near6 (component near carrier$1) same ((medium near access near control) mac) same ((control near element) ce) and bit$3 near map$3 with size$1 and (second different$1) near5 group$3 with (component near carrier$1) and ((medium near access near control) mac) same ((control near element) ce)	US-PGPUB; USPAT; USOCR; FPRS; EPO; JPO; DERWENT; IBM_TDB	OR	OFF	2017/01/04 22:45
S16	8	group$3 near6 (component near carrier$1) same ((medium near access near control) mac) same ((control near element) ce) and bit$3 near map$3 and (second different$1) near5 group$3 with (component near carrier$1) and ((medium near access near control) mac) same ((control near element) ce)	US-PGPUB; USPAT; USOCR; FPRS; EPO; JPO; DERWENT; IBM_TDB	OR	OFF	2017/01/04 23:02
S17	8	group$3 near6 (component near carrier$1) same ((medium near access near control) mac) same ((control near element) ce) and bit$3 near map$3 and (second different$1) near5 group$3 with (component near carrier$1) and ((medium near access near control) mac) same ((control near element) ce) and group$3	US-PGPUB; USPAT; USOCR; FPRS; EPO; JPO; DERWENT; IBM_TDB	OR	OFF	2017/01/04 23:03
S19	29693	(component near carrier$1) same ((medium near access near control) mac) same ((control near element) ce) and different$1 near6 bit$3 near map$3 with size$1 ((medium near access near control) mac) and ((control near element) ce)	US-PGPUB; USPAT; USOCR; FPRS; EPO; JPO; DERWENT; IBM_TDB	OR	OFF	2017/01/05 14:40
S20	3	(component near carrier$1) same ((medium near access near control) mac) same ((control near element) ce) and	US-PGPUB; USPAT; USOCR;	OR	OFF	2017/01/05 14:41

		different$1 near6 bit$3 near map$3 near3 size$1 and ((medium near access near control) mac) and ((control near element) ce)	FPRS; EPO; JPO; DERWENT; IBM_TDB			
S21	3	(component near carrier$1) and different$1 with bit$3 near map$3 with size$1 and ((medium near access near control) mac) and ((control near element) ce)	US-PGPUB; USPAT; USOCR; FPRS; EPO; JPO; DERWENT; IBM_TDB	OR	OFF	2017/01/05 14:42
S22	6	(component near carrier$1) and different$1 with bit$3 near map$3 and ((medium near access near control) mac) and ((control near element) ce)	US-PGPUB; USPAT; USOCR; FPRS; EPO; JPO; DERWENT; IBM_TDB	OR	OFF	2017/01/05 14:43
S23	1	(component near carrier$1) and bit$3 and ((medium near access near control) mac) same ((control near element) ce) and extend$3 with power$3 near head	US-PGPUB; USPAT; USOCR; FPRS; EPO; JPO; DERWENT; IBM_TDB	OR	OFF	2017/01/05 22:39
S24	1	(component near carrier$1) and bit$3 and ((medium near access near control) mac) same ((control near element) ce) and extend$3 with power$3 near2 head$3 near room$3	US-PGPUB; USPAT; USOCR; FPRS; EPO; JPO; DERWENT; IBM_TDB	OR	OFF	2017/01/05 22:39
S25	1	(component near carrier$1) and ((medium near access near control) mac) same ((control near element) ce) and extend$3 with power$3 near2 head$3 near room$3	US-PGPUB; USPAT; USOCR; FPRS; EPO; JPO; DERWENT; IBM_TDB	OR	OFF	2017/01/05 22:40
S26	1	(component near carrier$1) and extend$3 with power$3 near2 head$3 near room$3	US-PGPUB; USPAT; USOCR; FPRS; EPO; JPO; DERWENT; IBM_TDB	OR	OFF	2017/01/05 22:40
S27	19	(component near carrier$1) with power$3 near head	US-PGPUB; USPAT; USOCR; FPRS; EPO; JPO; DERWENT; IBM_TDB	OR	OFF	2017/01/06 00:23
S28	21	(component near carrier$1) same ((medium near access near control) mac) same ((control near element) ce) and (second different$1 chang$3) with (component near carrier$1) and ((medium near access near control) mac) and ((control near element) ce) and bit$3 near1 map$3 with (size value$1	US-PGPUB; USPAT; USOCR; FPRS; EPO; JPO; DERWENT; IBM_TDB	OR	OFF	2017/01/06 00:24

		amount$1)				
S29	6	S28 AND ((Y02B60/50).CPC.)	US-PGPUB; USPAT; USOCR; FPRS; EPO; JPO; DERWENT; IBM_TDB	OR	OFF	2017/01/06 00:24
S30	2	"20150237497"	US-PGPUB; USPAT; USOCR; FPRS; EPO; JPO; DERWENT; IBM_TDB	OR	OFF	2017/01/06 10:55
S31	20	carrier$1 with ((medium near access near control$3) mac) with ((control$3 near element) ce) and bit$3 near map$3 with size and different$3 with carrier$1	US-PGPUB; USPAT; USOCR; FPRS; EPO; JPO; DERWENT; IBM_TDB	OR	OFF	2017/05/23 14:17
S32	20	S31 AND ((H04W72/0413 OR H04W56/0005 OR H04W72/04 OR H04W88/12 OR H04L1/1614).CPC.)	US-PGPUB; USPAT; USOCR; FPRS; EPO; JPO; DERWENT; IBM_TDB	OR	OFF	2017/05/23 14:29
S33	11	("20090163211" | "20090318180" | "20100158147" | "20100246463" | "20100273515" | "20110038271" | "20110243016" | "20120294167" | "8711722" | "8873443" | "9036585").PN.	US-PGPUB; USPAT; USOCR	OR	OFF	2017/05/23 14:50
S34	3	component near carrier$1 same ((medium near access near control$3) mac) same ((control$3 near element) ce) and bit$3 near map$3 near4 size and different$3 with carrier$1 and (first second) near4 group$3	US-PGPUB; USPAT; USOCR; FPRS; EPO; JPO; DERWENT; IBM_TDB	OR	OFF	2017/05/23 15:01
S35	17	component near carrier$1 same ((medium near access near control$3) mac) same ((control$3 near element) ce) and bit$3 near map$3 and different$3 with carrier$1 and (first second) near4 group$3	US-PGPUB; USPAT; USOCR; FPRS; EPO; JPO; DERWENT; IBM_TDB	OR	OFF	2017/05/23 15:02
S36	7	component near carrier$1 same ((medium near access near control$3) mac) same ((control$3 near element) ce) and bit$3 near map$3 and different$3 with carrier$1 and (first second) near4 group$3.clm.	US-PGPUB; USPAT; USOCR; FPRS; EPO; JPO; DERWENT; IBM_TDB	OR	OFF	2017/05/23 15:04
S37	1	component near carrier$1 same ((medium near access near control) mac) same ((control near element) ce) and (second different$1 chang$3) with ((component near carrier$1) carrier$1) and ((medium near access near control)	US-PGPUB; USPAT; USOCR; FPRS; EPO; JPO; DERWENT;	OR	OFF	2017/05/23 15:32

		mac) and ((control near element) ce) and bit$3 near1 map$3 with (size value$1 amount$1).clm.	IBM_TDB			
S38	23	component near carrier$1 same ((medium near access near control) mac) same ((control near element) ce) and (second different$1 chang$3) with ((component near carrier$1) carrier$1) and ((medium near access near control) mac) and ((control near element) ce) and bit$3 near1 map$3 with (size value$1 amount$1)	US-PGPUB; USPAT; USOCR; FPRS; EPO; JPO; DERWENT; IBM_TDB	OR	OFF	2017/05/23 15:33
S39	2	("20130215866" | "20120082043").PN.	US-PGPUB; USPAT	OR	OFF	2017/05/23 15:36
S40	1	("20120083308").PN.	US-PGPUB; USPAT	OR	OFF	2017/05/23 15:37
S41	147	((network near management$3) (management$3 near entity) network) with ((base near station) ap (access near point) bts) with (identif$3 verif$3) with cell$1 with (problem bad low interfer$3)	US-PGPUB; USPAT; USOCR; FPRS; EPO; JPO; DERWENT; IBM_TDB	OR	OFF	2018/04/04 16:06
S42	33	((network near management$3) (management$3 near entity) network) with ((base near station) ap (access near point) bts) with (identif$3 verif$3) with cell$1 with (problem bad low interfer$3) and 455/$.ccls.	US-PGPUB; USPAT; USOCR; FPRS; EPO; JPO; DERWENT; IBM_TDB	OR	OFF	2018/04/04 16:10
S43	30	S42 and @ad<"20140505"	US-PGPUB; USPAT; USOCR; FPRS; EPO; JPO; DERWENT; IBM_TDB	OR	OFF	2018/04/04 16:10
S44	11	S42 and @ad<"20140505" and x2	US-PGPUB; USPAT; USOCR; FPRS; EPO; JPO; DERWENT; IBM_TDB	OR	OFF	2018/04/04 16:29
S45	5	("3916311" | "5235632" | "5404570" | "5537637" | "5603080").PN.	US-PGPUB; USPAT; USOCR	OR	OFF	2018/04/04 16:59
S46	7	"20140099955"	US-PGPUB; USPAT; USOCR; FPRS; EPO; JPO; DERWENT; IBM_TDB	OR	OFF	2018/04/04 17:00
S47	13	"20140071891"	US-PGPUB; USPAT; USOCR; FPRS; EPO; JPO; DERWENT;	OR	OFF	2018/04/04 17:09

			IBM_TDB			
S48	2	"9787456".pn.	US-PGPUB; USPAT; USOCR; FPRS; EPO; JPO; DERWENT; IBM_TDB	OR	OFF	2019/04/30 10:23
S49	4	"10177892".pn.	US-PGPUB; USPAT; USOCR; FPRS; EPO; JPO; DERWENT; IBM_TDB	OR	OFF	2019/04/30 10:24

5/1/2019 11:03:19 AM
C:\Users\kdoan\Documents\EAST\Workspaces\14911875.wsp

Attorney Docket No. 9900-45697US4 PATENT

IN THE UNITED STATES PATENT AND TRADEMARK OFFICE

In re: Mattias TAN BERGSTRÖM
Application No.: 16/203,450
Filed: November 28, 2018
Examiner: Kiet M. DOAN
Group Art Unit: 2641
Confirmation No.: 2596
Title: WIRELESS TERMINALS, NODES OF WIRELESS COMMUNICATION NETWORKS, AND METHODS OF OPERATING THE SAME

May 8, 2019

Commissioner for Patents
P.O. Box 1450
Alexandria, VA 22313-1450

REQUEST FOR CORRECTED FILING RECEIPT

Sir:

In reviewing the Filing Receipt mailed December 19, 2018 for the above referenced U.S. Patent Application, Applicants note the Priority Data is incorrect.

Applicants respectfully request a Corrected Filing Receipt be issued to reflect the correct priority data as listed in the original Application Data Sheet as filed, as follows:

This application is a Continuation of US 15/678,199 08/16/2017

which is a Continuation of US 14/911,875 02/12/2016

which is a 371 of PCT/SE2015/051191 11/10/2015

which claims benefit of US Provisional 62/149,899 04/20/2015

and which claims benefit of US Provisional 62/102,685 01/13/2015

A marked-up copy of the Filing Receipt mailed December 19, 2018, showing the changes to be made, is also attached. Applicants note that all priority information was correctly provided in the Application data sheet, but that the Filing Receipt omitted the information regarding the two provisional applications.

No fee is believed to be due, however, the Commissioner is hereby authorized to charge any additional fee, which may be required, or credit any refund, to our Deposit Account No. 60-1438.

Respectfully submitted,

/Scott C. Hatfield/

Scott C. Hatfield
Registration No. 38,176
Attorney for Applicant

Customer Number 146825
Sage Patent Group
P.O. Box 30789, Raleigh, NC 27622
984-219-3358
984-538-0416 (Fax)

UNITED STATES PATENT AND TRADEMARK OFFICE

UNITED STATES DEPARTMENT OF COMMERCE
United States Patent and Trademark Office
Address: COMMISSIONER FOR PATENTS
P.O. Box 1450
Alexandria, Virginia 22313-1450
www.uspto.gov

APPLICATION NUMBER	FILING or 371(c) DATE	GRP ART UNIT	FIL FEE REC'D	ATTY.DOCKET.NO	TOT CLAIMS	IND CLAIMS
16/203,450	11/28/2018		6020	9900-45697US4	40	8

CONFIRMATION NO. 2596

146825
Sage Patent Group/Telefonaktiebolaget LM Ericsson
PO BOX 30789
RALEIGH, NC 27622-0789

FILING RECEIPT

Date Mailed: 12/19/2018

Receipt is acknowledged of this non-provisional patent application. The application will be taken up for examination in due course. Applicant will be notified as to the results of the examination. Any correspondence concerning the application must include the following identification information: the U.S. APPLICATION NUMBER, FILING DATE, NAME OF APPLICANT, and TITLE OF INVENTION. Fees transmitted by check or draft are subject to collection. Please verify the accuracy of the data presented on this receipt. **If an error is noted on this Filing Receipt, please submit a written request for a Filing Receipt Correction. Please provide a copy of this Filing Receipt with the changes noted thereon. If you received a "Notice to File Missing Parts" for this application, please submit any corrections to this Filing Receipt with your reply to the Notice. When the USPTO processes the reply to the Notice, the USPTO will generate another Filing Receipt incorporating the requested corrections**

Inventor(s)

Mattias TAN BERGSTRÖM, Stockholm, SWEDEN;
Riikka SUSITAIVAL, Helsinki, FINLAND;
Magnus STATTIN, Upplands Väsby, SWEDEN;

Applicant(s)

Telefonaktiebolaget LM Ericsson (publ), Stockholm, SWEDEN;

Power of Attorney: The patent practitioners associated with Customer Number 146825

Domestic Priority data as claimed by applicant

This application is a CON of 15/678,199 08/16/2017
which is a CON of 14/911,875 02/12/2016 PAT 9787456
which is a 371 of PCT/SE2015/051191 11/10/2015

Foreign Applications for which priority is claimed (You may be eligible to benefit from the **Patent Prosecution Highway** program at the USPTO. Please see http://www.uspto.gov for more information.) - None.
Foreign application information must be provided in an Application Data Sheet in order to constitute a claim to foreign priority. See 37 CFR 1.55 and 1.76.

Permission to Access Application via Priority Document Exchange: Yes

Permission to Access Search Results: Yes

Applicant may provide or rescind an authorization for access using Form PTO/SB/39 or Form PTO/SB/69 as appropriate.

which claims benefit of US Provisional 62/149,899 04/20/2015
and which claims benefit of US Provisional 62/102,685 01/13/2015

If Required, Foreign Filing License Granted: 12/18/2018

The country code and number of your priority application, to be used for filing abroad under the Paris Convention, is **US 16/203,450**

Projected Publication Date: 03/28/2019

Non-Publication Request: No

Early Publication Request: No
Title

WIRELESS TERMINALS, NODES OF WIRELESS COMMUNICATION NETWORKS, AND METHODS OF OPERATING THE SAME

Preliminary Class

Statement under 37 CFR 1.55 or 1.78 for AIA (First Inventor to File) Transition Applications: No

PROTECTING YOUR INVENTION OUTSIDE THE UNITED STATES

Since the rights granted by a U.S. patent extend only throughout the territory of the United States and have no effect in a foreign country, an inventor who wishes patent protection in another country must apply for a patent in a specific country or in regional patent offices. Applicants may wish to consider the filing of an international application under the Patent Cooperation Treaty (PCT). An international (PCT) application generally has the same effect as a regular national patent application in each PCT-member country. The PCT process **simplifies** the filing of patent applications on the same invention in member countries, but **does not result** in a grant of "an international patent" and does not eliminate the need of applicants to file additional documents and fees in countries where patent protection is desired.

Almost every country has its own patent law, and a person desiring a patent in a particular country must make an application for patent in that country in accordance with its particular laws. Since the laws of many countries differ in various respects from the patent law of the United States, applicants are advised to seek guidance from specific foreign countries to ensure that patent rights are not lost prematurely.

Applicants also are advised that in the case of inventions made in the United States, the Director of the USPTO must issue a license before applicants can apply for a patent in a foreign country. The filing of a U.S. patent application serves as a request for a foreign filing license. The application's filing receipt contains further information and guidance as to the status of applicant's license for foreign filing.

Applicants may wish to consult the USPTO booklet, "General Information Concerning Patents" (specifically, the section entitled "Treaties and Foreign Patents") for more information on timeframes and deadlines for filing foreign patent applications. The guide is available either by contacting the USPTO Contact Center at 800-786-9199, or it can be viewed on the USPTO website at http://www.uspto.gov/web/offices/pac/doc/general/index.html.

For information on preventing theft of your intellectual property (patents, trademarks and copyrights), you may wish to consult the U.S. Government website, http://www.stopfakes.gov. Part of a Department of Commerce initiative, this website includes self-help "toolkits" giving innovators guidance on how to protect intellectual property in specific countries such as China, Korea and Mexico. For questions regarding patent enforcement issues, applicants may call the U.S. Government hotline at 1-866-999-HALT (1-866-999-4258).

LICENSE FOR FOREIGN FILING UNDER

Title 35, United States Code, Section 184

Title 37, Code of Federal Regulations, 5.11 & 5.15

GRANTED

The applicant has been granted a license under 35 U.S.C. 184, if the phrase "IF REQUIRED, FOREIGN FILING LICENSE GRANTED" followed by a date appears on this form. Such licenses are issued in all applications where the conditions for issuance of a license have been met, regardless of whether or not a license may be required as set forth in 37 CFR 5.15. The scope and limitations of this license are set forth in 37 CFR 5.15(a) unless an earlier license has been issued under 37 CFR 5.15(b). The license is subject to revocation upon written notification. The date indicated is the effective date of the license, unless an earlier license of similar scope has been granted under 37 CFR 5.13 or 5.14.

This license is to be retained by the licensee and may be used at any time on or after the effective date thereof unless it is revoked. This license is automatically transferred to any related applications(s) filed under 37 CFR 1.53(d). This license is not retroactive.

The grant of a license does not in any way lessen the responsibility of a licensee for the security of the subject matter as imposed by any Government contract or the provisions of existing laws relating to espionage and the national security or the export of technical data. Licensees should apprise themselves of current regulations especially with respect to certain countries, of other agencies, particularly the Office of Defense Trade Controls, Department of State (with respect to Arms, Munitions and Implements of War (22 CFR 121-128)); the Bureau of Industry and Security, Department of Commerce (15 CFR parts 730-774); the Office of Foreign AssetsControl, Department of Treasury (31 CFR Parts 500+) and the Department of Energy.

NOT GRANTED

No license under 35 U.S.C. 184 has been granted at this time, if the phrase "IF REQUIRED, FOREIGN FILING LICENSE GRANTED" DOES NOT appear on this form. Applicant may still petition for a license under 37 CFR 5.12, if a license is desired before the expiration of 6 months from the filing date of the application. If 6 months has lapsed from the filing date of this application and the licensee has not received any indication of a secrecy order under 35 U.S.C. 181, the licensee may foreign file the application pursuant to 37 CFR 5.15(b).

SelectUSA

The United States represents the largest, most dynamic marketplace in the world and is an unparalleled location for business investment, innovation, and commercialization of new technologies. The U.S. offers tremendous resources and advantages for those who invest and manufacture goods here. Through SelectUSA, our nation works to promote and facilitate business investment. SelectUSA provides information assistance to the international investor community; serves as an ombudsman for existing and potential investors; advocates on behalf of U.S. cities, states, and regions competing for global investment; and counsels U.S. economic development organizations on investment attraction best practices. To learn more about why the United States is the best country in the world to develop technology, manufacture products, deliver services, and grow your business, visit http://www.SelectUSA.gov or call +1-202-482-6800.

Electronic Acknowledgement Receipt

EFS ID:	35956181
Application Number:	16203450
International Application Number:	
Confirmation Number:	2596
Title of Invention:	WIRELESS TERMINALS, NODES OF WIRELESS COMMUNICATION NETWORKS, AND METHODS OF OPERATING THE SAME
First Named Inventor/Applicant Name:	Mattias TAN BERGSTRÖM
Customer Number:	146825
Filer:	Scott C. Hatfield/Cheryl Ramey
Filer Authorized By:	Scott C. Hatfield
Attorney Docket Number:	9900-45697US4
Receipt Date:	08-MAY-2019
Filing Date:	28-NOV-2018
Time Stamp:	15:44:39
Application Type:	Utility under 35 USC 111(a)

Payment information:

Submitted with Payment	no

File Listing:

Document Number	Document Description	File Name	File Size(Bytes)/ Message Digest	Multi Part /.zip	Pages (if appl.)
1	Request for Corrected Filing Receipt	P45697_US4_2019_05_08_Request_for_Corrected_Filing_Receipt.pdf	20391 7189c6a18f770658e3f7b35c03f9301f3ff9750a	no	2

Warnings:

Information:					
2	Request for Corrected Filing Receipt	P45697_US4_Marked-up_Filing_Receipt.pdf	1028060 c51a90ce047f09bca6471cf9acf9006f0691f3f1	no	3
Warnings:					
Information:					
			Total Files Size (in bytes):	1048451	

This Acknowledgement Receipt evidences receipt on the noted date by the USPTO of the indicated documents, characterized by the applicant, and including page counts, where applicable. It serves as evidence of receipt similar to a Post Card, as described in MPEP 503.

New Applications Under 35 U.S.C. 111

If a new application is being filed and the application includes the necessary components for a filing date (see 37 CFR 1.53(b)-(d) and MPEP 506), a Filing Receipt (37 CFR 1.54) will be issued in due course and the date shown on this Acknowledgement Receipt will establish the filing date of the application.

National Stage of an International Application under 35 U.S.C. 371

If a timely submission to enter the national stage of an international application is compliant with the conditions of 35 U.S.C. 371 and other applicable requirements a Form PCT/DO/EO/903 indicating acceptance of the application as a national stage submission under 35 U.S.C. 371 will be issued in addition to the Filing Receipt, in due course.

New International Application Filed with the USPTO as a Receiving Office

If a new international application is being filed and the international application includes the necessary components for an international filing date (see PCT Article 11 and MPEP 1810), a Notification of the International Application Number and of the International Filing Date (Form PCT/RO/105) will be issued in due course, subject to prescriptions concerning national security, and the date shown on this Acknowledgement Receipt will establish the international filing date of the application.

Doc Code: DIST.E.FILE **Document Description: Electronic Terminal Disclaimer - Filed**	PTO/SB/26 U.S. Patent and Trademark Office Department of Commerce

Electronic Petition Request	**TERMINAL DISCLAIMER TO OBVIATE A DOUBLE PATENTING REJECTION OVER A "PRIOR" PATENT**
Application Number	16203450
Filing Date	28-Nov-2018
First Named Inventor	Mattias TAN BERGSTRÖM
Attorney Docket Number	9900-45697US4
Title of Invention	WIRELESS TERMINALS, NODES OF WIRELESS COMMUNICATION NETWORKS, AND METHODS OF OPERATING THE SAME

☒ Filing of terminal disclaimer does not obviate requirement for response under 37 CFR 1.111 to outstanding Office Action

☒ This electronic Terminal Disclaimer is not being used for a Joint Research Agreement.

Owner	Percent Interest
TELEFONAKTIEBOLAGET LM ERICSSON (PUBL)	100%

The owner(s) with percent interest listed above in the instant application hereby disclaims, except as provided below, the terminal part of the statutory term of any patent granted on the instant application which would extend beyond the expiration date of the full statutory term of prior patent number(s)

9787456

10177892

as the term of said prior patent is presently shortened by any terminal disclaimer. The owner hereby agrees that any patent so granted on the instant application shall be enforceable only for and during such period that it and the prior patent are commonly owned. This agreement runs with any patent granted on the instant application and is binding upon the grantee, its successors or assigns.

In making the above disclaimer, the owner does not disclaim the terminal part of the term of any patent granted on the instant application that would extend to the expiration date of the full statutory term of the prior patent, "as the term of said prior patent is presently shortened by any terminal disclaimer," in the event that said prior patent later:
- expires for failure to pay a maintenance fee;
- is held unenforceable;
- is found invalid by a court of competent jurisdiction;
- is statutorily disclaimed in whole or terminally disclaimed under 37 CFR 1.321;
- has all claims canceled by a reexamination certificate;
- is reissued; or
- is in any manner terminated prior to the expiration of its full statutory term as presently shortened by any terminal disclaimer.

◉ Terminal disclaimer fee under 37 CFR 1.20(d) is included with Electronic Terminal Disclaimer request. ○ I certify, in accordance with 37 CFR 1.4(d)(4), that the terminal disclaimer fee under 37 CFR 1.20(d) required for this terminal disclaimer has already been paid in the above-identified application.	
Applicant claims the following fee status: ○ Small Entity ○ Micro Entity ◉ Regular Undiscounted I hereby declare that all statements made herein of my own knowledge are true and that all statements made on information and belief are believed to be true; and further that these statements were made with the knowledge that willful false statements and the like so made are punishable by fine or imprisonment, or both, under Section 1001 of Title 18 of the United States Code and that such willful false statements may jeopardize the validity of the application or any patent issued thereon.	
THIS PORTION MUST BE COMPLETED BY THE SIGNATORY OR SIGNATORIES I certify, in accordance with 37 CFR 1.4(d)(4) that I am: ◉ An attorney or agent registered to practice before the Patent and Trademark Office who is of record in this application Registration Number 38176 ○ A sole inventor ○ A joint inventor; I certify that I am authorized to sign this submission on behalf of all of the inventors as evidenced by the power of attorney in the application ○ A joint inventor; all of whom are signing this request	
Signature	/Scott C. Hatfield/
Name	/Scott C. Hatfield/

*Statement under 37 CFR 3.73(b) is required if terminal disclaimer is signed by the assignee (owner).
Form PTO/SB/96 may be used for making this certification. See MPEP § 324.

Electronic Patent Application Fee Transmittal

Application Number:	16203450
Filing Date:	28-Nov-2018
Title of Invention:	WIRELESS TERMINALS, NODES OF WIRELESS COMMUNICATION NETWORKS, AND METHODS OF OPERATING THE SAME
First Named Inventor/Applicant Name:	Mattias TAN BERGSTRÖM
Filer:	Scott C. Hatfield/Josh Cooke
Attorney Docket Number:	9900-45697US4

Filed as Large Entity

Filing Fees for Utility under 35 USC 111(a)

Description	Fee Code	Quantity	Amount	Sub-Total in USD($)
Basic Filing:				
STATUTORY OR TERMINAL DISCLAIMER	1814	1	160	160
Pages:				
Claims:				
Miscellaneous-Filing:				
Petition:				
Patent-Appeals-and-Interference:				
Post-Allowance-and-Post-Issuance:				

Description	Fee Code	Quantity	Amount	Sub-Total in USD($)
Extension-of-Time:				
Miscellaneous:				
			Total in USD ($)	**160**

Doc Code: DISQ.E.FILE
Document Description: Electronic Terminal Disclaimer – Approved

Application No.: 16203450

Filing Date: 28-Nov-2018

Applicant/Patent under Reexamination: TAN BERGSTRÖM

Electronic Terminal Disclaimer filed on May 9, 2019

☒ APPROVED

This patent is subject to a terminal disclaimer

☐ DISAPPROVED

Approved/Disapproved by: Electronic Terminal Disclaimer automatically approved by EFS-Web

U.S. Patent and Trademark Office

Electronic Acknowledgement Receipt	
EFS ID:	35961518
Application Number:	16203450
International Application Number:	
Confirmation Number:	2596
Title of Invention:	WIRELESS TERMINALS, NODES OF WIRELESS COMMUNICATION NETWORKS, AND METHODS OF OPERATING THE SAME
First Named Inventor/Applicant Name:	Mattias TAN BERGSTRÖM
Customer Number:	146825
Filer:	Scott C. Hatfield/Josh Cooke
Filer Authorized By:	Scott C. Hatfield
Attorney Docket Number:	9900-45697US4
Receipt Date:	09-MAY-2019
Filing Date:	28-NOV-2018
Time Stamp:	14:15:42
Application Type:	Utility under 35 USC 111(a)

Payment information:

Submitted with Payment	yes
Payment Type	CARD
Payment was successfully received in RAM	$160
RAM confirmation Number	051019INTEFSW14154000
Deposit Account	
Authorized User	
The Director of the USPTO is hereby authorized to charge indicated fees and credit any overpayment as follows:	

File Listing:

Document Number	Document Description	File Name	File Size(Bytes)/ Message Digest	Multi Part /.zip	Pages (if appl.)
1	Terminal Disclaimer-Filed (Electronic)	eTerminal-Disclaimer.pdf	33690 8883ad644de995b78c836ef6e137aa6c1e2aeef2	no	2
Warnings:					
Information:					
2	Fee Worksheet (SB06)	fee-info.pdf	30855 6eaa5a36b66db5d53db4d311baa86bce52b8aac9	no	2
Warnings:					
Information:					
		Total Files Size (in bytes):	64545		

This Acknowledgement Receipt evidences receipt on the noted date by the USPTO of the indicated documents, characterized by the applicant, and including page counts, where applicable. It serves as evidence of receipt similar to a Post Card, as described in MPEP 503.

New Applications Under 35 U.S.C. 111
If a new application is being filed and the application includes the necessary components for a filing date (see 37 CFR 1.53(b)-(d) and MPEP 506), a Filing Receipt (37 CFR 1.54) will be issued in due course and the date shown on this Acknowledgement Receipt will establish the filing date of the application.
National Stage of an International Application under 35 U.S.C. 371
If a timely submission to enter the national stage of an international application is compliant with the conditions of 35 U.S.C. 371 and other applicable requirements a Form PCT/DO/EO/903 indicating acceptance of the application as a national stage submission under 35 U.S.C. 371 will be issued in addition to the Filing Receipt, in due course.
New International Application Filed with the USPTO as a Receiving Office
If a new international application is being filed and the international application includes the necessary components for an international filing date (see PCT Article 11 and MPEP 1810), a Notification of the International Application Number and of the International Filing Date (Form PCT/RO/105) will be issued in due course, subject to prescriptions concerning national security, and the date shown on this Acknowledgement Receipt will establish the international filing date of the application.

Attorney Docket No. 9900-45697US4 PATENT

IN THE UNITED STATES PATENT AND TRADEMARK OFFICE

In re: Mattias TAN BERGSTRÖM et al. Conf. No.: 2596
Application No.: 16/203,450 Art Unit: 2641
Filed: November 28, 2018 Examiner: Doan, Kiet M.
For: WIRELESS TERMINALS, NODES OF WIRELESS COMMUNICATION NETWORKS, AND METHODS OF OPERATING THE SAME

Date: May 9, 2019

Mail Stop Amendment
Commissioner for Patents
Box 1450
Alexandria, VA 22313-1450

RESPONSE TO NON-FINAL OFFICE ACTION OF MAY 6, 2019

Sir:

The present Response is being filed to address the Non-Final Office Action that was mailed May 6, 2019 (hereinafter, the "Office Action"). No amendments are being presented, but a Terminal Disclaimer is being submitted concurrently herewith.

If any extension of time for the accompanying response or submission is required, please consider this a petition therefor. The Commissioner is hereby authorized to charge any additional fee, which may be required, or credit any refund, to our Deposit Account No. 60-1438.

A Listing of the Pending Claims is provided beginning on Page 2 of this paper (but no claim amendments are presented).

Remarks begin on Page 14 of this paper.

Electronic Acknowledgement Receipt

EFS ID:	35966869
Application Number:	16203450
International Application Number:	
Confirmation Number:	2596
Title of Invention:	WIRELESS TERMINALS, NODES OF WIRELESS COMMUNICATION NETWORKS, AND METHODS OF OPERATING THE SAME
First Named Inventor/Applicant Name:	Mattias TAN BERGSTRÖM
Customer Number:	146825
Filer:	Scott C. Hatfield/Josh Cooke
Filer Authorized By:	Scott C. Hatfield
Attorney Docket Number:	9900-45697US4
Receipt Date:	09-MAY-2019
Filing Date:	28-NOV-2018
Time Stamp:	14:32:04
Application Type:	Utility under 35 USC 111(a)

Payment information:

Submitted with Payment	no

File Listing:

Document Number	Document Description	File Name	File Size(Bytes)/ Message Digest	Multi Part /.zip	Pages (if appl.)
1		P45697_US4_Response_To_NFOA_05-06-2019_002.pdf	77287 2aa4e397c10c33e2b7f2cc1044b4a80cd1a1cade	yes	15

	Multipart Description/PDF files in .zip description		
	Document Description	**Start**	**End**
	Applicant Arguments/Remarks Made in an Amendment	14	15
	Claims	2	13
	Amendment/Req. Reconsideration-After Non-Final Reject	1	1
Warnings:			
Information:			
	Total Files Size (in bytes):	77287	

This Acknowledgement Receipt evidences receipt on the noted date by the USPTO of the indicated documents, characterized by the applicant, and including page counts, where applicable. It serves as evidence of receipt similar to a Post Card, as described in MPEP 503.

New Applications Under 35 U.S.C. 111
If a new application is being filed and the application includes the necessary components for a filing date (see 37 CFR 1.53(b)-(d) and MPEP 506), a Filing Receipt (37 CFR 1.54) will be issued in due course and the date shown on this Acknowledgement Receipt will establish the filing date of the application.
National Stage of an International Application under 35 U.S.C. 371
If a timely submission to enter the national stage of an international application is compliant with the conditions of 35 U.S.C. 371 and other applicable requirements a Form PCT/DO/EO/903 indicating acceptance of the application as a national stage submission under 35 U.S.C. 371 will be issued in addition to the Filing Receipt, in due course.
New International Application Filed with the USPTO as a Receiving Office
If a new international application is being filed and the international application includes the necessary components for an international filing date (see PCT Article 11 and MPEP 1810), a Notification of the International Application Number and of the International Filing Date (Form PCT/RO/105) will be issued in due course, subject to prescriptions concerning national security, and the date shown on this Acknowledgement Receipt will establish the international filing date of the application.

REMARKS

The Applicant sincerely appreciates the thorough examination of the present application that is evidenced by the Office Action of May 6, 2019. To reduce issues for further consideration, a Terminal Disclaimer is being submitted concurrently herewith.

In the following remarks, the Applicant will show that all claims are patentable. Favorable reconsideration and allowance of all pending claims is thus respectfully requested for at least the reasons discussed hereafter.

All Double Patenting Rejections Have Been Overcome

The Office Action rejected claims on the ground of non-statutory obviousness-type double patenting as being unpatentable over Claims 1-3 and 21 of U.S. Patent No. 9,787,456 and Claims 1, 12, 23, and 25 of U.S. Patent No. 10,177,892. To reduce issues for further consideration and without conceding the merits of the double patenting rejections, the Applicant has submitted a Terminal Disclaimer concurrently herewith. Accordingly, all double patenting rejections have been overcome.

CONCLUSION

In light of the above remarks and submission of the Terminal Disclaimer, the Applicant respectfully submits that the above-entitled application is in condition for allowance. Favorable reconsideration of this application is respectfully requested. If, in the opinion of the Examiner, a telephonic conference would expedite the examination of this application, the Examiner is invited to call the undersigned attorney at (984) 219-3455.

Respectfully submitted,

/Scott C. Hatfield/

Scott C. Hatfield
Registration No. 38,176
Attorney for Applicant

Customer Number 146825
Sage Patent Group
P.O. Box 30789
Raleigh, NC 27622
984-219-3455
984-538-0416 (Fax)

In the Claims:

This listing of claims will replace all prior versions, and listings, of claims in the application:

1. (Previously Presented) A method of operating a wireless terminal in communication with a wireless communication network, the method comprising:

receiving a first Medium Access Control (MAC) Control Element (CE) from the wireless communication network, wherein the first MAC CE includes a first bit map having a first bit map size with bits of the first bit map corresponding to respective component carriers of a first group of component carriers and indicating an activation status of the respective component carriers of the first group; and

receiving a second MAC CE from the wireless communication network, wherein the second MAC CE includes a second bit map having a second bit map size with bits of the second bit map corresponding to respective component carriers of a second group of component carriers and indicating an activation status of the respective component carriers of the second group, and wherein the first bit map size of the first bit map is different than the second bit map size of the second bit map.

2. (Previously Presented) The method of Claim 1 further comprising:

responsive to the first MAC CE, activating/deactivating component carriers of the first group of component carriers responsive to the first bit map; and

responsive to the second MAC CE, activating/deactivating component carriers of the second group of component carriers responsive to the second bit map.

3. (Previously Presented) The method of Claim 1, wherein a first Logical Channel Identity (LCID) is provided for the first MAC CE, a second LCID is provided for the second MAC CE, and the first and second LCIDs are different.

4. (Previously Presented) The method of Claim 3 wherein receiving the first MAC CE comprises receiving the first MAC CE and applying bits of the first bit map to respective

component carriers of the first group of component carriers responsive to the first LCID, and wherein receiving the second MAC CE comprises receiving the second MAC CE and applying bits of the second bit map to respective component carriers of the second group of component carriers responsive to the second LCID.

5. – 6. (Canceled)

7. (Previously Presented) The method of Claim 1, wherein the first group of component carriers includes a first group of secondary component carriers, wherein the second group of component carriers includes a second group of secondary component carriers, wherein the first and second groups of secondary component carriers are different, wherein each of the first group of secondary component carriers corresponds to a respective bit of the first bit map, and wherein each of the second group of secondary component carriers corresponds to a respective bit of the second bit map.

8. (Previously Presented) The method of Claim 7, wherein a respective component carrier index is associated with each secondary component carrier of the first group, wherein a respective component carrier index is associated with each secondary component carrier of the second group, wherein at least one of the component carrier indices of the secondary component carriers of the first group exceeds a threshold, wherein none of the component carrier indices of the secondary component carriers of the second group exceeds the threshold, and wherein the first bit map size of the first bit map is greater than the second bit map size of the second bit map.

9. (Previously Presented) A wireless terminal comprising:

a transceiver configured to provide radio communications with a wireless communication network over a radio interface; and

a processor coupled with the transceiver, wherein the processor is configured to:

receive a first Medium Access Control (MAC) Control Element (CE) through the transceiver from the wireless communication network, wherein the first MAC CE includes a first bit map having a first bit map size with bits of the first bit map

corresponding to respective component carriers of a first group of component carriers and indicating an activation status of the respective component carriers of the first group; and

receive a second MAC CE through the transceiver from the wireless communication network, wherein the second MAC CE includes a second bit map having a second bit map size with bits of the second bit map corresponding to respective component carriers of a second group of component carriers and indicating an activation status of the respective component carriers of the second group, and wherein the first bit map size of the first bit map is different than the second bit map size of the second bit map.

10. (Previously Presented) The wireless terminal of Claim 9, wherein the processor is further configured to:

activate/deactivate component carriers of the first group of component carriers responsive to the first MAC CE and the first bit map; and

activate/deactivate component carriers of the second group of component carriers responsive to the second MAC CE and the second bit map.

11. (Previously Presented) The wireless terminal of Claim 9, wherein a first Logical Channel Identity (LCID) is provided for the first MAC CE, a second LCID is provided for the second MAC CE, and the first and second LCIDs are different.

12. (Previously Presented) The wireless terminal of Claim 11, wherein receiving the first MAC CE comprises receiving the first MAC CE and applying bits of the first bit map to respective component carriers of the first group of component carriers responsive to the first LCID, and wherein receiving the second MAC CE comprises receiving the second MAC CE and applying bits of the second bit map to respective component carriers of the second group of component carriers responsive to the second LCID.

13. – 14. (Canceled)

15. (Previously Presented) The wireless terminal of Claim 9, wherein the first group of component carriers includes a first group of secondary component carriers, wherein the second group of component carriers includes a second group of secondary component carriers, wherein the first and second groups of secondary component carriers are different, wherein each of the first group of secondary component carriers corresponds to a respective bit of the first bit map, and wherein each of the second group of secondary component carriers corresponds to a respective bit of the second bit map.

16. (Previously Presented) The wireless terminal of Claim 15, wherein a respective component carrier index is associated with each secondary component carrier of the first group, wherein a respective component carrier index is associated with each secondary component carrier of the second group, wherein at least one of the component carrier indices of the secondary component carriers of the first group exceeds a threshold, wherein none of the component carrier indices of the secondary component carriers of the second group exceeds the threshold, and wherein the first bit map size of the first bit map is greater than the second bit map size of the second bit map.

17. (Previously Presented) A method of operating a node of a wireless communication network, the method comprising:

transmitting a first Medium Access Control (MAC) Control Element (CE) to a wireless terminal, wherein the first MAC CE includes a first bit map having a first bit map size with bits of the first bit map corresponding to respective component carriers of a first group of component carriers and indicating an activation status of the respective component carriers of the first group; and

transmitting a second MAC CE to the wireless terminal, wherein the second MAC CE includes a second bit map having a second bit map size with bits of the second bit map corresponding to respective component carriers of a second group of component carriers and indicating an activation status of the respective component carriers of the second group, and

wherein the first bit map size of the first bit map is different than the second bit map size of the second bit map.

18. (Previously Presented) The method of Claim 17, wherein a first Logical Channel Identity (LCID) is provided for the first MAC CE, a second LCID is provided for the second MAC CE, and the first and second LCIDs are different.

19. (Canceled)

20. (Previously Presented) The method of Claim 17, wherein the first group of component carriers includes a first group of secondary component carriers, wherein the second group of component carriers includes a second group of secondary component carriers, wherein the first and second groups of secondary component carriers are different, wherein each of the first group of secondary component carriers corresponds to a respective bit of the first bit map, and wherein each of the second group of secondary component carriers corresponds to a respective bit of the second bit map.

21. (Previously Presented) The method of Claim 20, wherein a respective component carrier index is associated with each secondary component carrier of the first group, wherein a respective component carrier index is associated with each secondary component carrier of the second group, wherein at least one of the component carrier indices of the secondary component carriers of the first group exceeds a threshold, wherein none of the component carrier indices of the secondary component carriers of the second group exceeds the threshold, and wherein the first bit map size of the first bit map is greater than the second bit map size of the second bit map.

22. (Previously Presented) A node of a wireless communication network, the node comprising:

a transceiver configured to provide radio communications with one or more wireless terminals over a radio interface; and

a processor coupled with the transceiver, wherein the processor is configured to:

transmit a first Medium Access Control (MAC) Control Element (CE) through the transceiver to a wireless terminal, wherein the first MAC CE includes a first bit map having a first bit map size with bits of the first bit map corresponding to respective component carriers of a first group of component carriers and indicating an activation status of the respective component carriers of the first group; and

transmit a second MAC CE through the transceiver to the wireless terminal, wherein the second MAC CE includes a second bit map having a second bit map size with bits of the second bit map corresponding to respective component carriers of a second group of component carriers and indicating an activation status of the respective component carriers of the second group, and wherein the first bit map size of the first bit map is different than the second bit map size of the second bit map.

23. (Previously Presented) The node of Claim 22, wherein a first Logical Channel Identity (LCID) is provided for the first MAC CE, a second LCID is provided for the second MAC CE, and the first and second LCIDs are different.

24. (Canceled)

25. (Previously Presented) The node of Claim 22, wherein the first group of component carriers includes a first group of secondary component carriers, wherein the second group of component carriers includes a second group of secondary component carriers, wherein the first and second groups of secondary component carriers are different, wherein each of the first group of secondary component carriers corresponds to a respective bit of the first bit map, and wherein each of the second group of secondary component carriers corresponds to a respective bit of the second bit map.

26. (Previously Presented) The node of Claim 25, wherein a respective component carrier index is associated with each secondary component carrier of the first group, wherein a respective component carrier index is associated with each secondary component carrier of the second group, wherein at least one of the component carrier indices of the secondary component

carriers of the first group exceeds a threshold, wherein none of the component carrier indices of the secondary component carriers of the second group exceeds the threshold, and wherein the first bit map size of the first bit map is greater than the second bit map size of the second bit map.

27. (Previously Presented) A method of operating a wireless terminal in communication with a wireless communication network, the method comprising:

receiving a medium access control, MAC, control element, CE, from the wireless communication network, wherein the MAC CE has one of a plurality of plurality of formats, wherein a first format of the plurality of formats has a first bit map size and the first format is associated with a first Logical Channel Identity (LCID), wherein a second format of the plurality of formats has a second bit map size and the second format is associated with a second LCID, wherein the first and second bit map sizes are different, and wherein the first and second LCIDs are different; and

responsive to receiving one of the first and second LCIDs together with the MAC CE, applying a bit map of the MAC CE using one of the first and second bit map sizes to activate/deactivate component carriers of a group of component carriers based on the one of the first and second LCIDs received together with the MAC CE.

28. (Previously Presented) The method of Claim 27, wherein the first LICD is received together with the MAC CE, wherein the MAC CE has the first format, wherein the bit map has the first bit map size of the first format, and wherein applying the bit map comprises applying the bit map of the MAC CE using the first bit map size to activate/deactivate respective ones of the component carriers of the group of component carriers responsive to receiving the first LCID together with the MAC CE.

29. (Previously Presented) The method of Claim 28, wherein the group of component carriers includes a group of secondary component carriers, and wherein each of the group of secondary component carriers corresponds to a respective bit of the bit map of the MAC CE.

30. (Previously Presented) The method of Claim 29, wherein a respective component carrier index is associated with each component carrier of the group of secondary component carriers, wherein at least one of the component carrier indices of the component carriers of the group of secondary component carriers exceeds a threshold, and wherein the first bit map size is greater than the second bit map size.

31. (Previously Presented) The method of Claim 28, wherein the MAC CE is a first MAC CE, wherein the bit map is a first bit map, and wherein the component carriers are first component carriers of a first group, the method further comprising:

receiving a second MAC CE from the wireless communication network, wherein the second MAC CE is received together with the second LCID, wherein the second MAC CE has the second format, and wherein second MAC CE has a second bit map with the second bit map size of the second format; and

responsive to receiving the second LCID together with the second MAC CE, applying the second bit map of the second MAC CE using the second bit map size to activate/deactivate second component carriers of a second group of component carriers.

32. (Previously Presented) A wireless terminal comprising:

a transceiver configured to provide radio communications with a wireless communication network over a radio interface; and

a processor coupled with the transceiver, wherein the processor is configured to:

receive a medium access control, MAC, control element, CE, from the wireless communication network, wherein the MAC CE has one of a plurality of plurality of formats, wherein a first format of the plurality of formats has a first bit map size and the first format is associated with a first Logical Channel Identity (LCID), wherein a second format of the plurality of formats has a second bit map size and the second format is associated with a second LCID, wherein the first and second bit map sizes are different, and wherein the first and second LCIDs are different; and

responsive to receiving one of the first and second LCIDs together with the MAC CE, applying a bit map of the MAC CE using one of the first and second bit map sizes to

activate/deactivate component carriers of a group of component carriers based on the one of the first and second LCIDs received together with the MAC CE.

33. (Previously Presented) The wireless terminal of Claim 32, wherein the first LICD is received together with the MAC CE, wherein the MAC CE has the first format, wherein the bit map has the first bit map size of the first format, and wherein applying the bit map comprises applying the bit map of the MAC CE using the first bit map size to activate/deactivate respective ones of the component carriers of the group of component carriers responsive to receiving the first LCID together with the MAC CE.

34. (Previously Presented) The wireless terminal of Claim 33, wherein the group of component carriers includes a group of secondary component carriers, and wherein each of the group of secondary component carriers corresponds to a respective bit of the bit map of the MAC CE.

35. (Previously Presented) The wireless terminal of Claim 34, wherein a respective component carrier index is associated with each component carrier of the group of secondary component carriers, wherein at least one of the component carrier indices of the component carriers of the group of secondary component carriers exceeds a threshold, and wherein the first bit map size is greater than the second bit map size.

36. (Previously Presented) The wireless terminal of Claim 33, wherein the MAC CE is a first MAC CE, wherein the bit map is a first bit map, and wherein the component carriers are first component carriers of a first group, wherein the processor is further configured to:

receive a second MAC CE from the wireless communication network, wherein the second MAC CE is received together with the second LCID, wherein the second MAC CE has the second format, and wherein second MAC CE has a second bit map with the second bit map size of the second format; and

apply the second bit map of the second MAC CE using the second bit map size to activate/deactivate second component carriers of a second group of component carriers responsive to receiving the second LCID together with the second MAC CE.

37. (Previously Presented) A method of operating a node of a wireless communication network, the method comprising:

selecting one of first and second formats for a medium access control, MAC, control element, CE, wherein the first format of the plurality of formats has a first bit map size and the first format is associated with a first Logical Channel Identify (LCID), wherein the second format has a second bit map size and the second format is associated with a second LCID, wherein the first and second bit map sizes are different, and wherein the first and second LCIDs are different; and

transmitting the MAC CE to a wireless terminal together with one of the first and second LCIDs associated with the one of the first and second formats selected for the MAC CE, wherein the MAC CE includes a bit map having one of the first and second bit map sizes associated with the one of the plurality of formats selected for the MAC CE, wherein bits of the bit map correspond to respective component carriers of a group of component carriers and includes an activation status of the respective component carriers of the group.

38. (Previously Presented) The method of Claim 37, wherein selecting comprises selecting the first format for the MAC CE, wherein the first LICD is transmitted together with the MAC CE, wherein the MAC CE has the first format, and wherein the bit map has the first bit map size of the first format.

39. (Previously Presented) The method of Claim 38, wherein the group of component carriers includes a group of secondary component carriers, and wherein each of the group of secondary component carriers corresponds to a respective bit of the bit map of the MAC CE.

40. (Previously Presented) The method of Claim 39, wherein a respective component carrier index is associated with each component carrier of the group of secondary component

carriers, wherein the first bit map size is greater than the second bit map size, and wherein the first format for the MAC CE is selected responsive to determining that at least one of the component carrier indices of the component carriers of the group of secondary component carriers exceeds a threshold.

41. (Previously Presented) The method of Claim 38, wherein the MAC CE is a first MAC CE, wherein the bit map is a first bit map, and wherein the component carriers are first component carriers of a first group, the method further comprising:

selecting the second format for a second MAC CE; and

transmitting the second MAC CE to the wireless terminal together with the second LCID associated with the second format, wherein the second MAC CE includes a bit map having the second bit map size associated with the second format selected for the MAC CE, wherein bits of the second bit map correspond to respective component carriers of a second group of component carriers and includes an activation status of the respective component carriers of the second group.

42. (Previously Presented) A node of a wireless communication network comprising:

a transceiver configured to provide radio communications with a wireless terminal over a radio interface; and

a processor coupled with the transceiver, wherein the processor is configured to:

select one of first and second formats for a medium access control, MAC, control element, CE, wherein the first format of the plurality of formats has a first bit map size and the first format is associated with a first Logical Channel Identify (LCID), wherein the second format has a second bit map size and the second format is associated with a second LCID, wherein the first and second bit map sizes are different, and wherein the first and second LCIDs are different; and

transmit the MAC CE to a wireless terminal together with one of the first and second LCIDs associated with the one of the first and second formats selected for the MAC CE, wherein the MAC CE includes a bit map having one of the first and second bit map sizes associated with the one of the plurality of formats selected for the MAC CE,

wherein bits of the bit map correspond to respective component carriers of a group of component carriers and includes an activation status of the respective component carriers of the group.

43. (Previously Presented) The node of Claim 42, wherein selecting comprises selecting the first format for the MAC CE, wherein the first LICD is transmitted together with the MAC CE, wherein the MAC CE has the first format, and wherein the bit map has the first bit map size of the first format.

44. (Previously Presented) The node of Claim 43, wherein the group of component carriers includes a group of secondary component carriers, and wherein each of the group of secondary component carriers corresponds to a respective bit of the bit map of the MAC CE.

45. (Previously Presented) The node of Claim 44, wherein a respective component carrier index is associated with each component carrier of the group of secondary component carriers, wherein the first bit map size is greater than the second bit map size, and wherein the first format for the MAC CE is selected responsive to determining that at least one of the component carrier indices of the component carriers of the group of secondary component carriers exceeds a threshold.

46. (Previously Presented) The node of Claim 43, wherein the MAC CE is a first MAC CE, wherein the bit map is a first bit map, and wherein the component carriers are first component carriers of a first group, wherein the processor is further configured to:

select the second format for a second MAC CE; and

transmit the second MAC CE to the wireless terminal together with the second LCID associated with the second format, wherein the second MAC CE includes a bit map having the second bit map size associated with the second format selected for the MAC CE, wherein bits of the second bit map correspond to respective component carriers of a second group of component carriers and includes an activation status of the respective component carriers of the second group.

PTO/SB/06 (09-11)
Approved for use through 1/31/2014. OMB 0651-0032
U.S. Patent and Trademark Office; U.S. DEPARTMENT OF COMMERCE
Under the Paperwork Reduction Act of 1995, no persons are required to respond to a collection of information unless it displays a valid OMB control number.

PATENT APPLICATION FEE DETERMINATION RECORD Substitute for Form PTO-875	Application or Docket Number 16/203,450	Filing Date 11/28/2018	☐ To be Mailed

ENTITY: ☑ LARGE ☐ SMALL ☐ MICRO

APPLICATION AS FILED - PART I

FOR	(Column 1) NUMBER FILED	(Column 2) NUMBER EXTRA		RATE ($)	FEE ($)
☐ BASIC FEE (37 CFR 1.16(a), (b), or (c))	N/A	N/A		N/A	
☐ SEARCH FEE (37 CFR 1.16(k), (i), or (m))	N/A	N/A		N/A	
☐ EXAMINATION FEE (37 CFR 1.16(o), (p), or (q))	N/A	N/A		N/A	
TOTAL CLAIMS (37 CFR 1.16(i))	minus 20 =	*		x $100 =	
INDEPENDENT CLAIMS (37 CFR 1.16(h))	minus 3 =	*		x $460 =	
☐ APPLICATION SIZE FEE (37 CFR 1.16(s))	If the specification and drawings exceed 100 sheets of paper, the application size fee due is $310 ($155 for small entity) for each additional 50 sheets or fraction thereof. See 35 U.S.C. 41(a)(1)(G) and 37 CFR 1.16(s).				
☐ MULTIPLE DEPENDENT CLAIM PRESENT (37 CFR 1.16(j))					
* If the difference in column 1 is less than zero, enter "0" in column 2.				TOTAL	

APPLICATION AS AMENDED - PART II

		(Column 1)		(Column 2)	(Column 3)			
AMENDMENT	05/09/2019	CLAIMS REMAINING AFTER AMENDMENT		HIGHEST NUMBER PREVIOUSLY PAID FOR	PRESENT EXTRA		RATE ($)	ADDITIONAL FEE ($)
	Total (37 CFR 1.16(i))	* 40	Minus	** 40	= 0		x $100 =	0
	Independent (37 CFR 1.16(h))	* 8	Minus	*** 8	= 0		x $460 =	0
	☐ Application Size Fee (37 CFR 1.16(s))							
	☐ FIRST PRESENTATION OF MULTIPLE DEPENDENT CLAIM (37 CFR 1.16(j))							
							TOTAL ADD'L FEE	0

		(Column 1)		(Column 2)	(Column 3)			
AMENDMENT		CLAIMS REMAINING AFTER AMENDMENT		HIGHEST NUMBER PREVIOUSLY PAID FOR	PRESENT EXTRA		RATE ($)	ADDITIONAL FEE ($)
	Total (37 CFR 1.16(i))	*	Minus	**	=		x $0 =	
	Independent (37 CFR 1.16(h))	*	Minus	***	=		x $0 =	
	☐ Application Size Fee (37 CFR 1.16(s))							
	☐ FIRST PRESENTATION OF MULTIPLE DEPENDENT CLAIM (37 CFR 1.16(j))							
							TOTAL ADD'L FEE	

* If the entry in column 1 is less than the entry in column 2, write "0" in column 3.	LIE
** If the "Highest Number Previously Paid For" IN THIS SPACE is less than 20, enter "20".	/ALLYSON PURNELL/
*** If the "Highest Number Previously Paid For" IN THIS SPACE is less than 3, enter "3".	
The "Highest Number Previously Paid For" (Total or Independent) is the highest number found in the appropriate box in column 1.	

This collection of information is required by 37 CFR 1.16. The information is required to obtain or retain a benefit by the public which is to file (and by the USPTO to process) an application. Confidentiality is governed by 35 U.S.C. 122 and 37 CFR 1.14. This collection is estimated to take 12 minutes to complete, including gathering, preparing, and submitting the completed application form to the USPTO. Time will vary depending upon the individual case. Any comments on the amount of time you require to complete this form and/or suggestions for reducing this burden, should be sent to the Chief Information Officer, U.S. Patent and Trademark Office, U.S. Department of Commerce, P.O. Box 1450, Alexandria, VA 22313-1450. DO NOT SEND FEES OR COMPLETED FORMS TO THIS ADDRESS. **SEND TO: Commissioner for Patents, P.O. Box 1450, Alexandria, VA 22313-1450.**

If you need assistance in completing the form, call 1-800-PTO-9199 and select option 2.

UNITED STATES PATENT AND TRADEMARK OFFICE

UNITED STATES DEPARTMENT OF COMMERCE
United States Patent and Trademark Office
Address: COMMISSIONER FOR PATENTS
P.O. Box 1450
Alexandria, Virginia 22313-1450
www.uspto.gov

APPLICATION NUMBER	FILING or 371(c) DATE	GRP ART UNIT	FIL FEE REC'D	ATTY.DOCKET.NO	TOT CLAIMS	IND CLAIMS
16/203,450	11/28/2018	2641	6020	9900-45697US4	40	8

CONFIRMATION NO. 2596

CORRECTED FILING RECEIPT

146825
Sage Patent Group/Telefonaktiebolaget LM Ericsson
PO BOX 30789
RALEIGH, NC 27622-0789

OC000000108082018

Date Mailed: 05/13/2019

Receipt is acknowledged of this non-provisional utility patent application. The application will be taken up for examination in due course. Applicant will be notified as to the results of the examination. Any correspondence concerning the application must include the following identification information: the U.S. APPLICATION NUMBER, FILING DATE, NAME OF FIRST INVENTOR, and TITLE OF INVENTION. Fees transmitted by check or draft are subject to collection.

Please verify the accuracy of the data presented on this receipt. If an error is noted on this Filing Receipt, please submit a written request for a corrected Filing Receipt, including a properly marked-up ADS showing the changes with strike-through for deletions and underlining for additions. If you received a "Notice to File Missing Parts" or other Notice requiring a response for this application, please submit any request for correction to this Filing Receipt with your reply to the Notice. When the USPTO processes the reply to the Notice, the USPTO will generate another Filing Receipt incorporating the requested corrections provided that the request is grantable.

Inventor(s)

Mattias TAN BERGSTRÖM, Stockholm, SWEDEN;
Riikka SUSITAIVAL, Helsinki, FINLAND;
Magnus STATTIN, Upplands Väsby, SWEDEN;

Applicant(s)

Telefonaktiebolaget LM Ericsson (publ), Stockholm, SWEDEN;

Power of Attorney: The patent practitioners associated with Customer Number 146825

Domestic Priority data as claimed by applicant

This application is a CON of 15/678,199 08/16/2017 PAT 10177892
which is a CON of 14/911,875 02/12/2016 PAT 9787456
which is a 371 of PCT/SE2015/051191 11/10/2015
which claims benefit of 62/149,899 04/20/2015
and claims benefit of 62/102,685 01/13/2015

Foreign Applications for which priority is claimed (You may be eligible to benefit from the **Patent Prosecution Highway** program at the USPTO. Please see http://www.uspto.gov for more information.) - None.
Foreign application information must be provided in an Application Data Sheet in order to constitute a claim to foreign priority. See 37 CFR 1.55 and 1.76.

Permission to Access Application via Priority Document Exchange: Yes

Permission to Access Search Results: Yes

Applicant may provide or rescind an authorization for access using Form PTO/SB/39 or Form PTO/SB/69 as appropriate.

If Required, Foreign Filing License Granted: 12/18/2018
The country code and number of your priority application, to be used for filing abroad under the Paris Convention, is **US 16/203,450**
Projected Publication Date: Not Applicable
Non-Publication Request: No
Early Publication Request: No
Title

WIRELESS TERMINALS, NODES OF WIRELESS COMMUNICATION NETWORKS, AND METHODS OF OPERATING THE SAME

Preliminary Class

455

Statement under 37 CFR 1.55 or 1.78 for AIA (First Inventor to File) Transition Applications: No

PROTECTING YOUR INVENTION OUTSIDE THE UNITED STATES

Since the rights granted by a U.S. patent extend only throughout the territory of the United States and have no effect in a foreign country, an inventor who wishes patent protection in another country must apply for a patent in a specific country or in regional patent offices. Applicants may wish to consider the filing of an international application under the Patent Cooperation Treaty (PCT). An international (PCT) application generally has the same effect as a regular national patent application in each PCT-member country. The PCT process **simplifies** the filing of patent applications on the same invention in member countries, but **does not result** in a grant of "an international patent" and does not eliminate the need of applicants to file additional documents and fees in countries where patent protection is desired.

Almost every country has its own patent law, and a person desiring a patent in a particular country must make an application for patent in that country in accordance with its particular laws. Since the laws of many countries differ in various respects from the patent law of the United States, applicants are advised to seek guidance from specific foreign countries to ensure that patent rights are not lost prematurely.

Applicants also are advised that in the case of inventions made in the United States, the Director of the USPTO must issue a license before applicants can apply for a patent in a foreign country. The filing of a U.S. patent application serves as a request for a foreign filing license. The application's filing receipt contains further information and guidance as to the status of applicant's license for foreign filing.

Applicants may wish to consult the USPTO booklet, "General Information Concerning Patents" (specifically, the section entitled "Treaties and Foreign Patents") for more information on timeframes and deadlines for filing foreign patent applications. The guide is available either by contacting the USPTO Contact Center at 800-786-9199, or it can be viewed on the USPTO website at http://www.uspto.gov/web/offices/pac/doc/general/index.html.

For information on preventing theft of your intellectual property (patents, trademarks and copyrights), you may wish to consult the U.S. Government website, http://www.stopfakes.gov. Part of a Department of Commerce initiative,

this website includes self-help "toolkits" giving innovators guidance on how to protect intellectual property in specific countries such as China, Korea and Mexico. For questions regarding patent enforcement issues, applicants may call the U.S. Government hotline at 1-866-999-HALT (1-866-999-4258).

LICENSE FOR FOREIGN FILING UNDER

Title 35, United States Code, Section 184

Title 37, Code of Federal Regulations, 5.11 & 5.15

GRANTED

The applicant has been granted a license under 35 U.S.C. 184, if the phrase "IF REQUIRED, FOREIGN FILING LICENSE GRANTED" followed by a date appears on this form. Such licenses are issued in all applications where the conditions for issuance of a license have been met, regardless of whether or not a license may be required as set forth in 37 CFR 5.15. The scope and limitations of this license are set forth in 37 CFR 5.15(a) unless an earlier license has been issued under 37 CFR 5.15(b). The license is subject to revocation upon written notification. The date indicated is the effective date of the license, unless an earlier license of similar scope has been granted under 37 CFR 5.13 or 5.14.

This license is to be retained by the licensee and may be used at any time on or after the effective date thereof unless it is revoked. This license is automatically transferred to any related applications(s) filed under 37 CFR 1.53(d). This license is not retroactive.

The grant of a license does not in any way lessen the responsibility of a licensee for the security of the subject matter as imposed by any Government contract or the provisions of existing laws relating to espionage and the national security or the export of technical data. Licensees should apprise themselves of current regulations especially with respect to certain countries, of other agencies, particularly the Office of Defense Trade Controls, Department of State (with respect to Arms, Munitions and Implements of War (22 CFR 121-128)); the Bureau of Industry and Security, Department of Commerce (15 CFR parts 730-774); the Office of Foreign AssetsControl, Department of Treasury (31 CFR Parts 500+) and the Department of Energy.

NOT GRANTED

No license under 35 U.S.C. 184 has been granted at this time, if the phrase "IF REQUIRED, FOREIGN FILING LICENSE GRANTED" DOES NOT appear on this form. Applicant may still petition for a license under 37 CFR 5.12, if a license is desired before the expiration of 6 months from the filing date of the application. If 6 months has lapsed from the filing date of this application and the licensee has not received any indication of a secrecy order under 35 U.S.C. 181, the licensee may foreign file the application pursuant to 37 CFR 5.15(b).

SelectUSA

The United States represents the largest, most dynamic marketplace in the world and is an unparalleled location for business investment, innovation, and commercialization of new technologies. The U.S. offers tremendous resources and advantages for those who invest and manufacture goods here. Through SelectUSA, our nation works to promote and facilitate business investment. SelectUSA provides information assistance to the international investor community; serves as an ombudsman for existing and potential investors; advocates on behalf of U.S. cities, states, and regions competing for global investment; and counsels U.S. economic development organizations on investment attraction best practices. To learn more about why the United States is the best country in the world to develop

technology, manufacture products, deliver services, and grow your business, visit http://www.SelectUSA.gov or call +1-202-482-6800.

UNITED STATES PATENT AND TRADEMARK OFFICE

UNITED STATES DEPARTMENT OF COMMERCE
United States Patent and Trademark Office
Address: COMMISSIONER FOR PATENTS
P.O. Box 1450
Alexandria, Virginia 22313-1450
www.uspto.gov

NOTICE OF ALLOWANCE AND FEE(S) DUE

146825 7590 06/05/2019

Sage Patent Group/Telefonaktiebolaget LM Ericsson
PO BOX 30789
RALEIGH, NC 27622-0789

EXAMINER
DOAN, KIET M

ART UNIT	PAPER NUMBER
2641	

DATE MAILED: 06/05/2019

APPLICATION NO.	FILING DATE	FIRST NAMED INVENTOR	ATTORNEY DOCKET NO.	CONFIRMATION NO.
16/203,450	11/28/2018	Mattias TAN BERGSTRÖM	9900-45697US4	2596

TITLE OF INVENTION: WIRELESS TERMINALS, NODES OF WIRELESS COMMUNICATION NETWORKS, AND METHODS OF OPERATING THE SAME

APPLN. TYPE	ENTITY STATUS	ISSUE FEE DUE	PUBLICATION FEE DUE	PREV. PAID ISSUE FEE	TOTAL FEE(S) DUE	DATE DUE
nonprovisional	UNDISCOUNTED	$1000	$0.00	$0.00	$1000	09/05/2019

THE APPLICATION IDENTIFIED ABOVE HAS BEEN EXAMINED AND IS ALLOWED FOR ISSUANCE AS A PATENT. PROSECUTION ON THE MERITS IS CLOSED. THIS NOTICE OF ALLOWANCE IS NOT A GRANT OF PATENT RIGHTS. THIS APPLICATION IS SUBJECT TO WITHDRAWAL FROM ISSUE AT THE INITIATIVE OF THE OFFICE OR UPON PETITION BY THE APPLICANT. SEE 37 CFR 1.313 AND MPEP 1308.

THE ISSUE FEE AND PUBLICATION FEE (IF REQUIRED) MUST BE PAID WITHIN THREE MONTHS FROM THE MAILING DATE OF THIS NOTICE OR THIS APPLICATION SHALL BE REGARDED AS ABANDONED. THIS STATUTORY PERIOD CANNOT BE EXTENDED. SEE 35 U.S.C. 151. THE ISSUE FEE DUE INDICATED ABOVE DOES NOT REFLECT A CREDIT FOR ANY PREVIOUSLY PAID ISSUE FEE IN THIS APPLICATION. IF AN ISSUE FEE HAS PREVIOUSLY BEEN PAID IN THIS APPLICATION (AS SHOWN ABOVE), THE RETURN OF PART B OF THIS FORM WILL BE CONSIDERED A REQUEST TO REAPPLY THE PREVIOUSLY PAID ISSUE FEE TOWARD THE ISSUE FEE NOW DUE.

HOW TO REPLY TO THIS NOTICE:

I. Review the ENTITY STATUS shown above. If the ENTITY STATUS is shown as SMALL or MICRO, verify whether entitlement to that entity status still applies.

If the ENTITY STATUS is the same as shown above, pay the TOTAL FEE(S) DUE shown above.

If the ENTITY STATUS is changed from that shown above, on PART B - FEE(S) TRANSMITTAL, complete section number 5 titled "Change in Entity Status (from status indicated above)".

For purposes of this notice, small entity fees are 1/2 the amount of undiscounted fees, and micro entity fees are 1/2 the amount of small entity fees.

II. PART B - FEE(S) TRANSMITTAL, or its equivalent, must be completed and returned to the United States Patent and Trademark Office (USPTO) with your ISSUE FEE and PUBLICATION FEE (if required). If you are charging the fee(s) to your deposit account, section "4b" of Part B - Fee(s) Transmittal should be completed and an extra copy of the form should be submitted. If an equivalent of Part B is filed, a request to reapply a previously paid issue fee must be clearly made, and delays in processing may occur due to the difficulty in recognizing the paper as an equivalent of Part B.

III. All communications regarding this application must give the application number. Please direct all communications prior to issuance to Mail Stop ISSUE FEE unless advised to the contrary.

IMPORTANT REMINDER: Maintenance fees are due in utility patents issuing on applications filed on or after Dec. 12, 1980. It is patentee's responsibility to ensure timely payment of maintenance fees when due. More information is available at www.uspto.gov/PatentMaintenanceFees.

PART B - FEE(S) TRANSMITTAL

Complete and send this form, together with applicable fee(s), by mail or fax, or via EFS-Web.

By mail, send to: Mail Stop ISSUE FEE
Commissioner for Patents
P.O. Box 1450
Alexandria, Virginia 22313-1450

By fax, send to: (571)-273-2885

INSTRUCTIONS: This form should be used for transmitting the ISSUE FEE and PUBLICATION FEE (if required). Blocks 1 through 5 should be completed where appropriate. All further correspondence including the Patent, advance orders and notification of maintenance fees will be mailed to the current correspondence address as indicated unless corrected below or directed otherwise in Block 1, by (a) specifying a new correspondence address; and/or (b) indicating a separate "FEE ADDRESS" for maintenance fee notifications.

CURRENT CORRESPONDENCE ADDRESS (Note: Use Block 1 for any change of address)

146825 7590 06/05/2019

Sage Patent Group/Telefonaktiebolaget LM Ericsson
PO BOX 30789
RALEIGH, NC 27622-0789

Note: A certificate of mailing can only be used for domestic mailings of the Fee(s) Transmittal. This certificate cannot be used for any other accompanying papers. Each additional paper, such as an assignment or formal drawing, must have its own certificate of mailing or transmission.

Certificate of Mailing or Transmission

I hereby certify that this Fee(s) Transmittal is being deposited with the United States Postal Service with sufficient postage for first class mail in an envelope addressed to the Mail Stop ISSUE FEE address above, or being transmitted to the USPTO via EFS-Web or by facsimile to (571) 273-2885, on the date below.

(Typed or printed name)
(Signature)
(Date)

APPLICATION NO.	FILING DATE	FIRST NAMED INVENTOR	ATTORNEY DOCKET NO.	CONFIRMATION NO.
16/203,450	11/28/2018	Mattias TAN BERGSTRÖM	9900-45697US4	2596

TITLE OF INVENTION: WIRELESS TERMINALS, NODES OF WIRELESS COMMUNICATION NETWORKS, AND METHODS OF OPERATING THE SAME

APPLN. TYPE	ENTITY STATUS	ISSUE FEE DUE	PUBLICATION FEE DUE	PREV. PAID ISSUE FEE	TOTAL FEE(S) DUE	DATE DUE
nonprovisional	UNDISCOUNTED	$1000	$0.00	$0.00	$1000	09/05/2019

EXAMINER	ART UNIT	CLASS-SUBCLASS
DOAN, KIET M	2641	455-450000

1. Change of correspondence address or indication of "Fee Address" (37 CFR 1.363).

❑ Change of correspondence address (or Change of Correspondence Address form PTO/SB/122) attached.

❑ "Fee Address" indication (or "Fee Address" Indication form PTO/SB/47; Rev 03-09 or more recent) attached. **Use of a Customer Number is required.**

2. For printing on the patent front page, list
(1) The names of up to 3 registered patent attorneys or agents OR, alternatively,
(2) The name of a single firm (having as a member a registered attorney or agent) and the names of up to 2 registered patent attorneys or agents. If no name is listed, no name will be printed.

1_____
2_____
3_____

3. ASSIGNEE NAME AND RESIDENCE DATA TO BE PRINTED ON THE PATENT (print or type)

PLEASE NOTE: Unless an assignee is identified below, no assignee data will appear on the patent. If an assignee is identified below, the document must have been previously recorded, or filed for recordation, as set forth in 37 CFR 3.11 and 37 CFR 3.81(a). Completion of this form is NOT a substitute for filing an assignment.

(A) NAME OF ASSIGNEE (B) RESIDENCE: (CITY and STATE OR COUNTRY)

Please check the appropriate assignee category or categories (will not be printed on the patent) : ❑ Individual ❑ Corporation or other private group entity ❑ Government

4a. Fees submitted: ❑Issue Fee ❑Publication Fee (if required) ❑Advance Order - # of Copies _____

4b. Method of Payment: *(Please first reapply any previously paid fee shown above)*

❑ Electronic Payment via EFS-Web ❑ Enclosed check ❑ Non-electronic payment by credit card (Attach form PTO-2038)

❑ The Director is hereby authorized to charge the required fee(s), any deficiency, or credit any overpayment to Deposit Account No. _____

5. **Change in Entity Status** (from status indicated above)

❑ Applicant certifying micro entity status. See 37 CFR 1.29

❑ Applicant asserting small entity status. See 37 CFR 1.27

❑ Applicant changing to regular undiscounted fee status.

NOTE: Absent a valid certification of Micro Entity Status (see forms PTO/SB/15A and 15B), issue fee payment in the micro entity amount will not be accepted at the risk of application abandonment.
NOTE: If the application was previously under micro entity status, checking this box will be taken to be a notification of loss of entitlement to micro entity status.
NOTE: Checking this box will be taken to be a notification of loss of entitlement to small or micro entity status, as applicable.

NOTE: This form must be signed in accordance with 37 CFR 1.31 and 1.33. See 37 CFR 1.4 for signature requirements and certifications.

Authorized Signature _____ Date _____

Typed or printed name _____ Registration No. _____

UNITED STATES PATENT AND TRADEMARK OFFICE

UNITED STATES DEPARTMENT OF COMMERCE
United States Patent and Trademark Office
Address: COMMISSIONER FOR PATENTS
P.O. Box 1450
Alexandria, Virginia 22313-1450
www.uspto.gov

APPLICATION NO.	FILING DATE	FIRST NAMED INVENTOR	ATTORNEY DOCKET NO.	CONFIRMATION NO.
16/203,450	11/28/2018	Mattias TAN BERGSTRÖM	9900-45697US4	2596

146825 7590 06/05/2019

Sage Patent Group/Telefonaktiebolaget LM Ericsson
PO BOX 30789
RALEIGH, NC 27622-0789

EXAMINER	
DOAN, KIET M	

ART UNIT	PAPER NUMBER
2641	

DATE MAILED: 06/05/2019

Determination of Patent Term Adjustment under 35 U.S.C. 154 (b)
(Applications filed on or after May 29, 2000)

The Office has discontinued providing a Patent Term Adjustment (PTA) calculation with the Notice of Allowance.

Section 1(h)(2) of the AIA Technical Corrections Act amended 35 U.S.C. 154(b)(3)(B)(i) to eliminate the requirement that the Office provide a patent term adjustment determination with the notice of allowance. See Revisions to Patent Term Adjustment, 78 Fed. Reg. 19416, 19417 (Apr. 1, 2013). Therefore, the Office is no longer providing an initial patent term adjustment determination with the notice of allowance. The Office will continue to provide a patent term adjustment determination with the Issue Notification Letter that is mailed to applicant approximately three weeks prior to the issue date of the patent, and will include the patent term adjustment on the patent. Any request for reconsideration of the patent term adjustment determination (or reinstatement of patent term adjustment) should follow the process outlined in 37 CFR 1.705.

Any questions regarding the Patent Term Extension or Adjustment determination should be directed to the Office of Patent Legal Administration at (571)-272-7702. Questions relating to issue and publication fee payments should be directed to the Customer Service Center of the Office of Patent Publication at 1-(888)-786-0101 or (571)-272-4200.

OMB Clearance and PRA Burden Statement for PTOL-85 Part B

The Paperwork Reduction Act (PRA) of 1995 requires Federal agencies to obtain Office of Management and Budget approval before requesting most types of information from the public. When OMB approves an agency request to collect information from the public, OMB (i) provides a valid OMB Control Number and expiration date for the agency to display on the instrument that will be used to collect the information and (ii) requires the agency to inform the public about the OMB Control Number's legal significance in accordance with 5 CFR 1320.5(b).

The information collected by PTOL-85 Part B is required by 37 CFR 1.311. The information is required to obtain or retain a benefit by the public which is to file (and by the USPTO to process) an application. Confidentiality is governed by 35 U.S.C. 122 and 37 CFR 1.14. This collection is estimated to take 30 minutes to complete, including gathering, preparing, and submitting the completed application form to the USPTO. Time will vary depending upon the individual case. Any comments on the amount of time you require to complete this form and/or suggestions for reducing this burden, should be sent to the Chief Information Officer, U.S. Patent and Trademark Office, U.S. Department of Commerce, P.O. Box 1450, Alexandria, Virginia 22313-1450. DO NOT SEND FEES OR COMPLETED FORMS TO THIS ADDRESS. SEND TO: Commissioner for Patents, P.O. Box 1450, Alexandria, Virginia 22313-1450. Under the Paperwork Reduction Act of 1995, no persons are required to respond to a collection of information unless it displays a valid OMB control number.

Privacy Act Statement

The Privacy Act of 1974 (P.L. 93-579) requires that you be given certain information in connection with your submission of the attached form related to a patent application or patent. Accordingly, pursuant to the requirements of the Act, please be advised that: (1) the general authority for the collection of this information is 35 U.S.C. 2(b)(2); (2) furnishing of the information solicited is voluntary; and (3) the principal purpose for which the information is used by the U.S. Patent and Trademark Office is to process and/or examine your submission related to a patent application or patent. If you do not furnish the requested information, the U.S. Patent and Trademark Office may not be able to process and/or examine your submission, which may result in termination of proceedings or abandonment of the application or expiration of the patent.

The information provided by you in this form will be subject to the following routine uses:

1. The information on this form will be treated confidentially to the extent allowed under the Freedom of Information Act (5 U.S.C. 552) and the Privacy Act (5 U.S.C 552a). Records from this system of records may be disclosed to the Department of Justice to determine whether disclosure of these records is required by the Freedom of Information Act.
2. A record from this system of records may be disclosed, as a routine use, in the course of presenting evidence to a court, magistrate, or administrative tribunal, including disclosures to opposing counsel in the course of settlement negotiations.
3. A record in this system of records may be disclosed, as a routine use, to a Member of Congress submitting a request involving an individual, to whom the record pertains, when the individual has requested assistance from the Member with respect to the subject matter of the record.
4. A record in this system of records may be disclosed, as a routine use, to a contractor of the Agency having need for the information in order to perform a contract. Recipients of information shall be required to comply with the requirements of the Privacy Act of 1974, as amended, pursuant to 5 U.S.C. 552a(m).
5. A record related to an International Application filed under the Patent Cooperation Treaty in this system of records may be disclosed, as a routine use, to the International Bureau of the World Intellectual Property Organization, pursuant to the Patent Cooperation Treaty.
6. A record in this system of records may be disclosed, as a routine use, to another federal agency for purposes of National Security review (35 U.S.C. 181) and for review pursuant to the Atomic Energy Act (42 U.S.C. 218(c)).
7. A record from this system of records may be disclosed, as a routine use, to the Administrator, General Services, or his/her designee, during an inspection of records conducted by GSA as part of that agency's responsibility to recommend improvements in records management practices and programs, under authority of 44 U.S.C. 2904 and 2906. Such disclosure shall be made in accordance with the GSA regulations governing inspection of records for this purpose, and any other relevant (i.e., GSA or Commerce) directive. Such disclosure shall not be used to make determinations about individuals.
8. A record from this system of records may be disclosed, as a routine use, to the public after either publication of the application pursuant to 35 U.S.C. 122(b) or issuance of a patent pursuant to 35 U.S.C. 151. Further, a record may be disclosed, subject to the limitations of 37 CFR 1.14, as a routine use, to the public if the record was filed in an application which became abandoned or in which the proceedings were terminated and which application is referenced by either a published application, an application open to public inspection or an issued patent.
9. A record from this system of records may be disclosed, as a routine use, to a Federal, State, or local law enforcement agency, if the USPTO becomes aware of a violation or potential violation of law or regulation.

Notice of Allowability	Application No. 16/203,450	Applicant(s) TAN BERGSTRÖM et al.	
	Examiner KIET M DOAN	Art Unit 2641	AIA (FITF) Status Yes

-- The MAILING DATE of this communication appears on the cover sheet with the correspondence address--

All claims being allowable, PROSECUTION ON THE MERITS IS (OR REMAINS) CLOSED in this application. If not included herewith (or previously mailed), a Notice of Allowance (PTOL-85) or other appropriate communication will be mailed in due course. **THIS NOTICE OF ALLOWABILITY IS NOT A GRANT OF PATENT RIGHTS.** This application is subject to withdrawal from issue at the initiative of the Office or upon petition by the applicant. See 37 CFR 1.313 and MPEP 1308.

1. ☑ This communication is responsive to 05/09/2019.
   ☐ A declaration(s)/affidavit(s) under **37 CFR 1.130(b)** was/were filed on _____.

2. ☐ An election was made by the applicant in response to a restriction requirement set forth during the interview on _____; the restriction requirement and election have been incorporated into this action.

3. ☑ The allowed claim(s) is/are See Continuation Sheet . As a result of the allowed claim(s), you may be eligible to benefit from the **Patent Prosecution Highway** program at a participating intellectual property office for the corresponding application. For more information, please see **http://www.uspto.gov/patents/init_events/pph/index.jsp** or send an inquiry to **PPHfeedback@uspto.gov.**

4. ☐ Acknowledgment is made of a claim for foreign priority under 35 U.S.C. § 119(a)-(d) or (f).

   Certified copies:

   a) ☐ All b) ☐ Some *c) ☐ None of the:

   1. ☐ Certified copies of the priority documents have been received.
   2. ☐ Certified copies of the priority documents have been received in Application No. _____ .
   3. ☐ Copies of the certified copies of the priority documents have been received in this national stage application from the International Bureau (PCT Rule 17.2(a)).

   * Certified copies not received: _____ .

Applicant has THREE MONTHS FROM THE "MAILING DATE" of this communication to file areply complying with the requirements noted below. Failure to timely comply will result in ABANDONMENT of this application.
THIS THREE-MONTH PERIOD IS NOT EXTENDABLE.

5. ☐ CORRECTED DRAWINGS (as "replacement sheets") must be submitted.
   ☐ including changes required by the attached Examiner's Amendment / Comment or in the Office action of Paper No./Mail Date _____ .

   Identifying indicia such as the application number (see 37 CFR 1.84(c)) should be written on the drawings in the front (not the back) of each sheet. Replacement sheet(s) should be labeled as such in the header according to 37 CFR 1.121(d).

6. ☐ DEPOSIT OF and/or INFORMATION about the deposit of BIOLOGICAL MATERIAL must be submitted. Note the attached Examiner's comment regarding REQUIREMENT FOR THE DEPOSIT OF BIOLOGICAL MATERIAL.

Attachment(s)

1. ☐ Notice of References Cited (PTO-892)
2. ☐ Information Disclosure Statements (PTO/SB/08), Paper No./Mail Date _____.
3. ☐ Examiner's Comment Regarding Requirement for Deposit of Biological Material _____.
4. ☐ Interview Summary (PTO-413), Paper No./Mail Date. _____.
5. ☐ Examiner's Amendment/Comment
6. ☑ Examiner's Statement of Reasons for Allowance
7. ☐ Other _____.

/KIET M DOAN/
Primary Examiner, Art Unit 2641

Continuation of 3. The allowed claim(s) is/are: 1-4,7-12,15-18,20-23 and 25-46

DETAILED ACTION

Notice of Pre-AIA or AIA Status

The present application, filed on or after March 16, 2013, is being examined under the first inventor to file provisions of the AIA.

Allowable Subject Matter

The following is an examiner's statement of reasons for allowance:

Claims 1-4, 7-12, 15-18, 20-23 and 25-46 are allowance, according to the recorded of rejection application 14/911,875 now US Patent 9,787,456 and Terminal Disclaimer filed on 05/09/2019.

Any comments considered necessary by applicant must be submitted no later than the payment of the issue fee and, to avoid processing delays, should preferably accompany the issue fee. Such submissions should be clearly labeled "Comments on Statement of Reasons for Allowance."

Conclusion

Any inquiry concerning this communication or earlier communications from the examiner should be directed to KIET M DOAN whose telephone number is (571)272-7863. The examiner can normally be reached on M-F 9:30am-5:30pm.

Examiner interviews are available via telephone, in-person, and video conferencing using a USPTO supplied web-based collaboration tool. To schedule an

interview, applicant is encouraged to use the USPTO Automated Interview Request (AIR) at http://www.uspto.gov/interviewpractice.

If attempts to reach the examiner by telephone are unsuccessful, the examiner's supervisor, Charles Appiah can be reached on 571-272-7904. The fax phone number for the organization where this application or proceeding is assigned is 571-273-8300.

Information regarding the status of an application may be obtained from the Patent Application Information Retrieval (PAIR) system. Status information for published applications may be obtained from either Private PAIR or Public PAIR. Status information for unpublished applications is available through Private PAIR only. For more information about the PAIR system, see http://pair-direct.uspto.gov. Should you have questions on access to the Private PAIR system, contact the Electronic Business Center (EBC) at 866-217-9197 (toll-free). If you would like assistance from a USPTO Customer Service Representative or access to the automated information system, call 800-786-9199 (IN USA OR CANADA) or 571-272-1000.

/KIET M DOAN/
Primary Examiner, Art Unit 2641

Issue Classification	Application/Control No.	Applicant(s)/Patent Under Reexamination
	16/203,450	TAN BERGSTRÖM et al.
	Examiner	**Art Unit**
	KIET M DOAN	2641

CPC							
Symbol						**Type**	**Version**
H04L	/	5	/	0098		F	2013-01-01
H04L	/	5	/	001		I	2013-01-01
H04W	/	52	/	365		I	2013-01-01
H04L	/	1	/	1614		I	2013-01-01
H04L	/	43	/	16		I	2013-01-01
H04L	/	61	/	6022		I	2013-01-01

CPC Combination Sets								
Symbol						**Type**	**Set**	**Ranking**	**Version**
	/		/						

NONE		Total Claims Allowed:	
(Assistant Examiner)	(Date)	40	
/KIET M DOAN/ Primary Examiner, Art Unit 2641	30 May 2019	O.G. Print Claim(s)	O.G. Print Figure
(Primary Examiner)	(Date)	1	15

U.S. Patent and Trademark Office — Part of Paper No.: 20190530

Issue Classification	Application/Control No.	Applicant(s)/Patent Under Reexamination
	16/203,450	TAN BERGSTRÖM et al.
	Examiner	**Art Unit**
	KIET M DOAN	2641

INTERNATIONAL CLASSIFICATION				
CLAIMED				
H04L	/	5	/	00

NON-CLAIMED				
	/		/	

US ORIGINAL CLASSIFICATION	
CLASS	**SUBCLASS**

CROSS REFERENCES(S)						
CLASS	**SUBCLASS (ONE SUBCLASS PER BLOCK)**					

NONE		Total Claims Allowed:	
(Assistant Examiner)	(Date)	40	
/KIET M DOAN/ Primary Examiner, Art Unit 2641	30 May 2019	O.G. Print Claim(s)	O.G. Print Figure
(Primary Examiner)	(Date)	1	15

U.S. Patent and Trademark Office — Part of Paper No.: 20190530

Issue Classification	Application/Control No.	Applicant(s)/Patent Under Reexamination
	16/203,450	TAN BERGSTRÖM et al.
	Examiner	Art Unit
	KIET M DOAN	2641

☐ Claims renumbered in the same order as presented by applicant ☐ CPA ☑ T.D. ☐ R.1.47

CLAIMS

Final	Original	Final	Original	Final	Original	Final	Original	Final	Original	Final	Original	Final	Original	Final	Original
1	1	8	10		19	22	28	31	37	40	46				
2	2	9	11	15	20	23	29	32	38						
3	3	10	12	16	21	24	30	33	39						
4	4		13	17	22	25	31	34	40						
	5		14	18	23	26	32	35	41						
	6	11	15		24	27	33	36	42						
5	7	12	16	19	25	28	34	37	43						
6	8	13	17	20	26	29	35	38	44						
7	9	14	18	21	27	30	36	39	45						

NONE		Total Claims Allowed:	
(Assistant Examiner)	(Date)	40	
/KIET M DOAN/ Primary Examiner, Art Unit 2641	30 May 2019	O.G. Print Claim(s)	O.G. Print Figure
(Primary Examiner)	(Date)	1	15

U.S. Patent and Trademark Office Part of Paper No.: 20190530

Search Notes	Application/Control No.	Applicant(s)/Patent Under Reexamination
	16/203,450	TAN BERGSTRÖM et al.
	Examiner	Art Unit
	KIET M DOAN	2641

CPC - Searched*		
Symbol	**Date**	**Examiner**
H04L5/001	05/01/2019	KD
H04L1/1614	05/01/2019	KD
H04W72/0413	05/01/2019	KD

CPC Combination Sets - Searched*		
Symbol	**Date**	**Examiner**

US Classification - Searched*			
Class	**Subclass**	**Date**	**Examiner**
370	329	05/01/2019	KD
	336	05/01/2019	KD
	252	05/01/2019	KD
455	509	05/01/2019	KD
	422.1	05/01/2019	KD
	501	05/01/2019	KD
	450	05/01/2019	KD
455	522	05/30/2019	KD
370	336	05/30/2019	KD

* See search history printout included with this form or the SEARCH NOTES box below to determine the scope of the search.

/KIET M DOAN/ Primary Examiner, Art Unit 2641	

Search Notes	Application/Control No.	Applicant(s)/Patent Under Reexamination
	16/203,450	TAN BERGSTRÖM et al.
	Examiner	Art Unit
	KIET M DOAN	2641

Search Notes		
Search Notes	**Date**	**Examiner**
Inventor search	05/01/2019	KD
East search	05/01/2019	KD
((medium near access near control) mac) same ((control near element) ce) and ((component near carrier$1) carrier$1) and ((medium near access near control) mac) and ((control near element) ce) and bit$3 with map$3 with (size amount value$1) and carrier$1 with (active activat$3). clm.	05/01/2019	KD
((medium near access near control) mac) same ((control near element) ce) and group$3 with ((component near carrier$1) carrier$1) with (active activat$3) and second with ((medium near access near control) mac) and ((control near element) ce) and bit$3 with map$3 with (size amount value$1) and different$1 with bit$3 with map$3 and bit$3 near2 map$3	05/01/2019	KD
((H04L1/1614 OR H04L5/001 OR H04L5/0098).CPC.)	05/01/2019	KD
((H04L5/001 OR H04L5/0098 OR H04L1/1614 OR H04L1/0026).CPC.)	05/01/2019	KD
((medium near access near control) mac) same ((control near element) ce) and ((component near carrier$1) carrier$1) and ((medium near access near control) mac) and ((control near element) ce) and bit$3 with map$3 with (size amount value$1) and carrier$1 with (active activat$3). clm.	05/01/2019	KD
		KD
((medium near access near control) mac) same ((control near element) ce) and ((component near carrier$1) carrier$1) and ((medium near access near control) mac) and ((control near element) ce) and bit$3 with map$3 with (size amount value$1) and carrier$1 with (active activat$3). clm.	05/30/2019	KD
receiv$3 with ((medium near access near control) mac) same ((control near element) ce) and ((component near carrier$1) carrier$1) and (plurality multiple second) with ((medium near access near control) mac) and ((control near element) ce) and bit$3 with map$3 and carrier$1 and bit$3 near3 map$3.clm.	05/30/2019	KD
((H04L61/6022 OR H04L1/1671 OR H04L5/0007 OR H04W88/08 OR H04W52/146 OR H04W84/045).CPC.)	05/30/2019	KD
group$3 and (component near carrier$1) with (mobile wireless $4phone ue) and ((medium near access near control) mac) same ((control near element) ce) and bit$3 near map$3 with (size value$1 amount$1).clm.	05/30/2019	KD
update search	05/30/2019	KD

/KIET M DOAN/ Primary Examiner, Art Unit 2641	

Search Notes	Application/Control No.	Applicant(s)/Patent Under Reexamination
	16/203,450	TAN BERGSTRÖM et al.
	Examiner	Art Unit
	KIET M DOAN	2641

Interference Search			
US Class/CPC Symbol	US Subclass/CPC Group	Date	Examiner
375	240	05/01/2019	KD

/KIET M DOAN/ Primary Examiner, Art Unit 2641	

Index of Claims	Application/Control No.	Applicant(s)/Patent Under Reexamination
	16/203,450	TAN BERGSTRÖM et al.
	Examiner	**Art Unit**
	KIET M DOAN	2641

✓	Rejected	-	Cancelled	N	Non-Elected	A	Appeal
=	Allowed	÷	Restricted	I	Interference	O	Objected

CLAIMS

☐ Claims renumbered in the same order as presented by applicant ☐ CPA ☑ T.D. ☐ R.1.47

CLAIM		DATE								
Final	Original	04/30/2019	05/30/2019							
1	1	✓	=							
2	2	✓	=							
3	3	✓	=							
4	4	✓	=							
	5	-	-							
	6	-	-							
5	7	✓	=							
6	8	✓	=							
7	9	✓	=							
8	10	✓	=							
9	11	✓	=							
10	12	✓	=							
	13	-	-							
	14	-	-							
11	15	✓	=							
12	16	✓	=							
13	17	✓	=							
14	18	✓	=							
	19	-	-							
15	20	✓	=							
16	21	✓	=							
17	22	✓	=							
18	23	✓	=							
	24	-	-							
19	25	✓	=							
20	26	✓	=							
21	27	✓	=							
22	28	✓	=							
23	29	✓	=							
24	30	✓	=							
25	31	✓	=							
26	32	✓	=							
27	33	✓	=							
28	34	✓	=							
29	35	✓	=							
30	36	✓	=							
31	37	✓	=							
32	38	✓	=							
33	39	✓	=							
34	40	✓	=							
35	41	✓	=							
36	42	✓	=							

Index of Claims	Application/Control No.	Applicant(s)/Patent Under Reexamination
	16/203,450	TAN BERGSTRÖM et al.
	Examiner	**Art Unit**
	KIET M DOAN	2641

CLAIM		DATE								
Final	Original	04/30/2019	05/30/2019							
37	43	✓	=							
38	44	✓	=							
39	45	✓	=							
40	46	✓	=							

EAST Search History

EAST Search History (Prior Art)

Ref #	Hits	Search Query	DBs	Default Operator	Plurals	Time Stamp
L1	18	receiv$3 with ((medium near access near control) mac) same ((control near element) ce) and ((component near carrier$1) carrier$1) and (plurality multiple second) with ((medium near access near control) mac) and ((control near element) ce) and bit$3 with map$3 and carrier$1 and bit$3 near3 map$3.clm.	US-PGPUB; USPAT; USOCR; FPRS; EPO; JPO; DERWENT; IBM_TDB	OR	OFF	2019/05/30 21:25
L2	13	1 AND ((H04L61/6022 OR H04L1/1671 OR H04L5/0007 OR H04W88/08 OR H04W52/146 OR H04W84/045).CPC.)	US-PGPUB; USPAT; USOCR; FPRS; EPO; JPO; DERWENT; IBM_TDB	OR	OFF	2019/05/30 21:28
L3	18	receiv$3 with ((medium near access near control) mac) same ((control near element) ce) and ((component near carrier$1) carrier$1) and (plurality multiple second) with ((medium near access near control) mac) and ((control near element) ce) and bit$3 with map$3 and carrier$1 and bit$3 near3 map$3.clm.	US-PGPUB; USPAT; USOCR; FPRS; EPO; JPO; DERWENT; IBM_TDB	OR	OFF	2019/05/30 21:28
L4	5	component near carrier$1 same ((medium near access near control) mac) same ((control near element) ce) and (second different$1 chang$3) with ((component near carrier$1) carrier$1) and ((medium near access near control) mac) and ((control near element) ce) and bit$3 near1 map$3 with (size value$1 amount$1).clm.	US-PGPUB; USPAT; USOCR; FPRS; EPO; JPO; DERWENT; IBM_TDB	OR	OFF	2019/05/30 21:30
L5	7	group$3 and (component near carrier$1) with (mobile wireless $4phone ue) and ((medium near access near control) mac) same ((control near element) ce) and bit$3 near map$3 with (size value$1 amount$1).clm.	US-PGPUB; USPAT; USOCR; FPRS; EPO; JPO; DERWENT; IBM_TDB	OR	OFF	2019/05/30 21:35
S1	25	(communicat$3 connect$3) with between with (mobile wireless $4phone) and (communicat$3 connect$3) with ((medium near access near control) mac (control near element) ce) and bit$3 near map$3 with size$1 and carrier$1	US-PGPUB; USPAT; USOCR; FPRS; EPO; JPO; DERWENT; IBM_TDB	OR	OFF	2017/01/04 00:03
S2	9	(communicat$3 connect$3) with between with (mobile wireless $4phone) and (communicat$3 connect$3) with	US-PGPUB; USPAT; USOCR;	OR	OFF	2017/01/04 00:12

		((medium near access near control) mac) same ((control near element) ce) and bit$3 near map$3 with size$1	FPRS; EPO; JPO; DERWENT; IBM_TDB			
S3	1	("20120083308").PN.	US-PGPUB; USPAT	OR	OFF	2017/01/04 12:08
S4	1	("20120083308").PN.	US-PGPUB; USPAT	OR	OFF	2017/01/04 12:10
S5	1	("20120083308").PN.	US-PGPUB; USPAT	OR	OFF	2017/01/04 12:10
S6	2	"20130215866"	US-PGPUB; USPAT; USOCR; FPRS; EPO; JPO; DERWENT; IBM_TDB	OR	OFF	2017/01/04 12:10
S7	7	"20120082043"	US-PGPUB; USPAT; USOCR; FPRS; EPO; JPO; DERWENT; IBM_TDB	OR	OFF	2017/01/04 12:11
S8	4	"7116976".pn.	US-PGPUB; USPAT; USOCR; FPRS; EPO; JPO; DERWENT; IBM_TDB	OR	OFF	2017/01/04 15:22
S9	3	group$3 with (component near carrier$1) with (mobile wireless $4phone ue) same ((medium near access near control) mac) same ((control near element) ce) and bit$3 near map$3 with size$1 and (second different$1) with group$3 with (component near carrier$1) and ((medium near access near control) mac) same ((control near element) ce)	US-PGPUB; USPAT; USOCR; FPRS; EPO; JPO; DERWENT; IBM_TDB	OR	OFF	2017/01/04 15:44
S10	15	group$3 with (component near carrier$1) with (mobile wireless $4phone ue) and ((medium near access near control) mac) same ((control near element) ce) and bit$3 near map$3 and (second different$1) with group$3 with (component near carrier$1)	US-PGPUB; USPAT; USOCR; FPRS; EPO; JPO; DERWENT; IBM_TDB	OR	OFF	2017/01/04 15:48
S11	15	group$3 with (component near carrier$1) with (mobile wireless $4phone ue) and ((medium near access near control) mac) same ((control near element) ce) and bit$3 near map$3 and (second different$1) with group$3 with (component near carrier$1) and (component near carrier$1)	US-PGPUB; USPAT; USOCR; FPRS; EPO; JPO; DERWENT; IBM_TDB	OR	OFF	2017/01/04 15:59
S12	14	S11 AND ((H04W52/281 OR H04W52/327 OR H04W52/365 OR H04W36/30 OR H04W56/0005 OR H04W88/12 OR H04L5/0098 OR H04L5/0055 OR H04L1/1614 OR	US-PGPUB; USPAT; USOCR; FPRS; EPO; JPO;	OR	OFF	2017/01/04 16:15

		H04L61/6022).CPC.)	DERWENT; IBM_TDB			
S13	3	"20130288751"	US-PGPUB; USPAT; USOCR; FPRS; EPO; JPO; DERWENT; IBM_TDB	OR	OFF	2017/01/04 16:29
S14	35	group$3 and (component near carrier$1) with (mobile wireless $4phone ue) and ((medium near access near control) mac) same ((control near element) ce) and bit$3 near map$3 with (size value$1 amount$1)	US-PGPUB; USPAT; USOCR; FPRS; EPO; JPO; DERWENT; IBM_TDB	OR	OFF	2017/01/04 16:38
S15	8	group$3 near6 (component near carrier$1) same ((medium near access near control) mac) same ((control near element) ce) and bit$3 near map$3 with size$1 and (second different$1) near5 group$3 with (component near carrier$1) and ((medium near access near control) mac) same ((control near element) ce)	US-PGPUB; USPAT; USOCR; FPRS; EPO; JPO; DERWENT; IBM_TDB	OR	OFF	2017/01/04 22:45
S16	8	group$3 near6 (component near carrier$1) same ((medium near access near control) mac) same ((control near element) ce) and bit$3 near map$3 and (second different$1) near5 group$3 with (component near carrier$1) and ((medium near access near control) mac) same ((control near element) ce)	US-PGPUB; USPAT; USOCR; FPRS; EPO; JPO; DERWENT; IBM_TDB	OR	OFF	2017/01/04 23:02
S17	8	group$3 near6 (component near carrier$1) same ((medium near access near control) mac) same ((control near element) ce) and bit$3 near map$3 and (second different$1) near5 group$3 with (component near carrier$1) and ((medium near access near control) mac) same ((control near element) ce) and group$3	US-PGPUB; USPAT; USOCR; FPRS; EPO; JPO; DERWENT; IBM_TDB	OR	OFF	2017/01/04 23:03
S19	29693	(component near carrier$1) same ((medium near access near control) mac) same ((control near element) ce) and different$1 near6 bit$3 near map$3 with size$1 ((medium near access near control) mac) and ((control near element) ce)	US-PGPUB; USPAT; USOCR; FPRS; EPO; JPO; DERWENT; IBM_TDB	OR	OFF	2017/01/05 14:40
S20	3	(component near carrier$1) same ((medium near access near control) mac) same ((control near element) ce) and different$1 near6 bit$3 near map$3 near3 size$1 and ((medium near access near control) mac) and ((control near element) ce)	US-PGPUB; USPAT; USOCR; FPRS; EPO; JPO; DERWENT; IBM_TDB	OR	OFF	2017/01/05 14:41
S21	3	(component near carrier$1) and different$1 with bit$3 near map$3 with size$1 and ((medium near access near control) mac) and ((control near element) ce)	US-PGPUB; USPAT; USOCR; FPRS; EPO; JPO; DERWENT;	OR	OFF	2017/01/05 14:42

			IBM_TDB			
S22	6	(component near carrier$1) and different$1 with bit$3 near map$3 and ((medium near access near control) mac) and ((control near element) ce)	US-PGPUB; USPAT; USOCR; FPRS; EPO; JPO; DERWENT; IBM_TDB	OR	OFF	2017/01/05 14:43
S23	1	(component near carrier$1) and bit$3 and ((medium near access near control) mac) same ((control near element) ce) and extend$3 with power$3 near head	US-PGPUB; USPAT; USOCR; FPRS; EPO; JPO; DERWENT; IBM_TDB	OR	OFF	2017/01/05 22:39
S24	1	(component near carrier$1) and bit$3 and ((medium near access near control) mac) same ((control near element) ce) and extend$3 with power$3 near2 head$3 near room$3	US-PGPUB; USPAT; USOCR; FPRS; EPO; JPO; DERWENT; IBM_TDB	OR	OFF	2017/01/05 22:39
S25	1	(component near carrier$1) and ((medium near access near control) mac) same ((control near element) ce) and extend$3 with power$3 near2 head$3 near room$3	US-PGPUB; USPAT; USOCR; FPRS; EPO; JPO; DERWENT; IBM_TDB	OR	OFF	2017/01/05 22:40
S26	1	(component near carrier$1) and extend$3 with power$3 near2 head$3 near room$3	US-PGPUB; USPAT; USOCR; FPRS; EPO; JPO; DERWENT; IBM_TDB	OR	OFF	2017/01/05 22:40
S27	19	(component near carrier$1) with power$3 near head	US-PGPUB; USPAT; USOCR; FPRS; EPO; JPO; DERWENT; IBM_TDB	OR	OFF	2017/01/06 00:23
S28	21	(component near carrier$1) same ((medium near access near control) mac) same ((control near element) ce) and (second different$1 chang$3) with (component near carrier$1) and ((medium near access near control) mac) and ((control near element) ce) and bit$3 near1 map$3 with (size value$1 amount$1)	US-PGPUB; USPAT; USOCR; FPRS; EPO; JPO; DERWENT; IBM_TDB	OR	OFF	2017/01/06 00:24
S29	6	S28 AND ((Y02B60/50).CPC.)	US-PGPUB; USPAT; USOCR; FPRS; EPO; JPO; DERWENT; IBM_TDB	OR	OFF	2017/01/06 00:24
S30	2	"20150237497"	US-PGPUB; USPAT;	OR	OFF	2017/01/06 10:55

			USOCR; FPRS; EPO; JPO; DERWENT; IBM_TDB			
S31	20	carrier$1 with ((medium near access near control$3) mac) with ((control$3 near element) ce) and bit$3 near map$3 with size and different$3 with carrier$1	US-PGPUB; USPAT; USOCR; FPRS; EPO; JPO; DERWENT; IBM_TDB	OR	OFF	2017/05/23 14:17
S32	20	S31 AND ((H04W72/0413 OR H04W56/0005 OR H04W72/04 OR H04W88/12 OR H04L1/1614).CPC.)	US-PGPUB; USPAT; USOCR; FPRS; EPO; JPO; DERWENT; IBM_TDB	OR	OFF	2017/05/23 14:29
S33	11	("20090163211" | "20090318180" | "20100158147" | "20100246463" | "20100273515" | "20110038271" | "20110243016" | "20120294167" | "8711722" | "8873443" | "9036585").PN.	US-PGPUB; USPAT; USOCR	OR	OFF	2017/05/23 14:50
S34	3	component near carrier$1 same ((medium near access near control$3) mac) same ((control$3 near element) ce) and bit$3 near map$3 near4 size and different$3 with carrier$1 and (first second) near4 group$3	US-PGPUB; USPAT; USOCR; FPRS; EPO; JPO; DERWENT; IBM_TDB	OR	OFF	2017/05/23 15:01
S35	17	component near carrier$1 same ((medium near access near control$3) mac) same ((control$3 near element) ce) and bit$3 near map$3 and different$3 with carrier$1 and (first second) near4 group$3	US-PGPUB; USPAT; USOCR; FPRS; EPO; JPO; DERWENT; IBM_TDB	OR	OFF	2017/05/23 15:02
S36	7	component near carrier$1 same ((medium near access near control$3) mac) same ((control$3 near element) ce) and bit$3 near map$3 and different$3 with carrier$1 and (first second) near4 group$3.clm.	US-PGPUB; USPAT; USOCR; FPRS; EPO; JPO; DERWENT; IBM_TDB	OR	OFF	2017/05/23 15:04
S37	1	component near carrier$1 same ((medium near access near control) mac) same ((control near element) ce) and (second different$1 chang$3) with ((component near carrier$1) carrier$1) and ((medium near access near control) mac) and ((control near element) ce) and bit$3 near1 map$3 with (size value$1 amount$1).clm.	US-PGPUB; USPAT; USOCR; FPRS; EPO; JPO; DERWENT; IBM_TDB	OR	OFF	2017/05/23 15:32
S38	23	component near carrier$1 same ((medium near access near control) mac) same ((control near element) ce) and (second different$1 chang$3) with ((component near carrier$1) carrier$1) and ((medium near access near control) mac) and ((control near element) ce) and	US-PGPUB; USPAT; USOCR; FPRS; EPO; JPO; DERWENT; IBM_TDB	OR	OFF	2017/05/23 15:33

		bit$3 near1 map$3 with (size value$1 amount$1)				
S39	2	("20130215866" | "20120082043").PN.	US-PGPUB; USPAT	OR	OFF	2017/05/23 15:36
S40	1	("20120083308").PN.	US-PGPUB; USPAT	OR	OFF	2017/05/23 15:37
S41	147	((network near management$3) (management$3 near entity) network) with ((base near station) ap (access near point) bts) with (identif$3 verif$3) with cell$1 with (problem bad low interfer$3)	US-PGPUB; USPAT; USOCR; FPRS; EPO; JPO; DERWENT; IBM_TDB	OR	OFF	2018/04/04 16:06
S42	33	((network near management$3) (management$3 near entity) network) with ((base near station) ap (access near point) bts) with (identif$3 verif$3) with cell$1 with (problem bad low interfer$3) and 455/$.ccls.	US-PGPUB; USPAT; USOCR; FPRS; EPO; JPO; DERWENT; IBM_TDB	OR	OFF	2018/04/04 16:10
S43	30	S42 and @ad<"20140505"	US-PGPUB; USPAT; USOCR; FPRS; EPO; JPO; DERWENT; IBM_TDB	OR	OFF	2018/04/04 16:10
S44	11	S42 and @ad<"20140505" and x2	US-PGPUB; USPAT; USOCR; FPRS; EPO; JPO; DERWENT; IBM_TDB	OR	OFF	2018/04/04 16:29
S45	5	("3916311" | "5235632" | "5404570" | "5537637" | "5603080").PN.	US-PGPUB; USPAT; USOCR	OR	OFF	2018/04/04 16:59
S46	7	"20140099955"	US-PGPUB; USPAT; USOCR; FPRS; EPO; JPO; DERWENT; IBM_TDB	OR	OFF	2018/04/04 17:00
S47	13	"20140071891"	US-PGPUB; USPAT; USOCR; FPRS; EPO; JPO; DERWENT; IBM_TDB	OR	OFF	2018/04/04 17:09
S48	2	"9787456".pn.	US-PGPUB; USPAT; USOCR; FPRS; EPO; JPO; DERWENT; IBM_TDB	OR	OFF	2019/04/30 10:23
S49	4	"10177892".pn.	US-PGPUB; USPAT;	OR	OFF	2019/04/30 10:24

			USOCR; FPRS; EPO; JPO; DERWENT; IBM_TDB			
S53	572	receiv$3 with ((medium near access near control) mac) same ((control near element) ce) and ((component near carrier$1) carrier$1) and ((medium near access near control) mac) and ((control near element) ce) and bit$3 with map$3 and carrier$1	US-PGPUB; USPAT; USOCR; FPRS; EPO; JPO; DERWENT; IBM_TDB	OR	OFF	2019/05/01 09:34
S54	1135	((medium near access near control) mac) same ((control near element) ce) and ((component near carrier$1) carrier$1) and ((medium near access near control) mac) and ((control near element) ce) and bit$3 with map$3 and carrier$1	US-PGPUB; USPAT; USOCR; FPRS; EPO; JPO; DERWENT; IBM_TDB	OR	OFF	2019/05/01 09:34
S55	27	receiv$3 with ((medium near access near control) mac) same ((control near element) ce) and ((component near carrier$1) carrier$1) and ((medium near access near control) mac) and ((control near element) ce) and bit$3 with map$3 with (size amount value$1) and carrier$1 with (active activat$3).clm.	US-PGPUB; USPAT; USOCR; FPRS; EPO; JPO; DERWENT; IBM_TDB	OR	OFF	2019/05/01 09:36
S56	13	receiv$3 with ((medium near access near control) mac) same ((control near element) ce) and ((component near carrier$1) carrier$1) and second with ((medium near access near control) mac) and ((control near element) ce) and bit$3 with map$3 with (size amount value$1) and carrier$1 with (active activat$3) and different with bit$3 with map$3	US-PGPUB; USPAT; USOCR; FPRS; EPO; JPO; DERWENT; IBM_TDB	OR	OFF	2019/05/01 10:21
S57	5	receiv$3 with ((medium near access near control) mac) same ((control near element) ce) and ((component near carrier$1) carrier$1) and second with ((medium near access near control) mac) and ((control near element) ce) and bit$3 with map$3 with (size amount value$1) and group$3 with carrier$1 with (active activat$3) and different with bit$3 with map$3	US-PGPUB; USPAT; USOCR; FPRS; EPO; JPO; DERWENT; IBM_TDB	OR	OFF	2019/05/01 10:26
S58	5	((medium near access near control) mac) same ((control near element) ce) and group$3 with ((component near carrier$1) carrier$1) with (active activat$3) and second with ((medium near access near control) mac) and ((control near element) ce) and bit$3 with map$3 with (size amount value$1) and different$1 with bit$3 with map$3 and bit$3 near2 map$3	US-PGPUB; USPAT; USOCR; FPRS; EPO; JPO; DERWENT; IBM_TDB	OR	OFF	2019/05/01 10:29
S59	12	((medium near access near control) mac) same ((control near element) ce) and ((component near carrier$1) carrier$1) with (active activat$3) and second with ((medium near access near control) mac) and ((control near element) ce) and bit$3	US-PGPUB; USPAT; USOCR; FPRS; EPO; JPO; DERWENT;	OR	OFF	2019/05/01 10:31

		with map$3 with (size amount value$1) and different$1 with bit$3 with map$3 and bit$3 near2 map$3	IBM_TDB			
S60	8	("20120176926" | "20130114577" | "20140023055" | "20140029575" | "20140308921" | "20150099501" | "20150373559" | "20160157219").PN.	US-PGPUB; USPAT; USOCR	OR	OFF	2019/05/01 10:32
S61	5	((medium near access near control) mac) same ((control near element) ce) and ((component near carrier$1) carrier$1) with (active activat$3) and ((medium near access near control) mac) and ((control near element) ce) and bit$3 with map$3 with (size amount value$1) and different$1 with bit$3 with map$3 and bit$3 near2 map$3.clm.	US-PGPUB; USPAT; USOCR; FPRS; EPO; JPO; DERWENT; IBM_TDB	OR	OFF	2019/05/01 10:36
S62	5	S61 AND ((H04L1/1614 OR H04L5/001 OR H04L5/0098).CPC.)	US-PGPUB; USPAT; USOCR; FPRS; EPO; JPO; DERWENT; IBM_TDB	OR	OFF	2019/05/01 10:37
S63	23	S55 AND ((H04L5/001 OR H04L5/0098 OR H04L1/1614 OR H04L1/0026).CPC.)	US-PGPUB; USPAT; USOCR; FPRS; EPO; JPO; DERWENT; IBM_TDB	OR	OFF	2019/05/01 10:40
S64	28	((medium near access near control) mac) same ((control near element) ce) and ((component near carrier$1) carrier$1) and ((medium near access near control) mac) and ((control near element) ce) and bit$3 with map$3 with (size amount value$1) and carrier$1 with (active activat$3).clm.	US-PGPUB; USPAT; USOCR; FPRS; EPO; JPO; DERWENT; IBM_TDB	OR	OFF	2019/05/01 10:44
S65	289	receiv$3 with ((medium near access near control) mac) same ((control near element) ce) and ((component near carrier$1) carrier$1) and (plurality multiple second) with ((medium near access near control) mac) and ((control near element) ce) and bit$3 with map$3 and carrier$1 and bit$3 near3 map$3	US-PGPUB; USPAT; USOCR; FPRS; EPO; JPO; DERWENT; IBM_TDB	OR	OFF	2019/05/01 10:49
S66	18	receiv$3 with ((medium near access near control) mac) same ((control near element) ce) and ((component near carrier$1) carrier$1) and (plurality multiple second) with ((medium near access near control) mac) and ((control near element) ce) and bit$3 with map$3 and carrier$1 and bit$3 near3 map$3.clm.	US-PGPUB; USPAT; USOCR; FPRS; EPO; JPO; DERWENT; IBM_TDB	OR	OFF	2019/05/01 10:50

5/30/2019 9:53:54 PM
C:\Users\kdoan\Documents\EAST\Workspaces\14911875.wsp

Attorney Docket No. 9900-45697US4 PATENT

IN THE UNITED STATES PATENT AND TRADEMARK OFFICE

In re: Mattias TAN BERGSTRÖM et al. Conf. No.: 2596
Application No.: 16/203,450 Examiner: Doan, Kiet M.
Filed: November 28, 2018 Art Unit: 2641
For: WIRELESS TERMINALS, NODES OF WIRELESS COMMUNICATION NETWORKS, AND METHODS OF OPERATING THE SAME

Date: June 18, 2019

Mail Stop Issue Fee
Commissioner for Patents
Box 1450
Alexandria, VA 22313-1450

AMENDMENT AFTER ALLOWANCE PURSUANT TO 37 C.F.R. SECTION 1.312 AND MPEP SECTION 714.16

Sir:

Please enter the present Amendment After Allowance before issuance of the present application.

If any extension of time for the accompanying response or submission is required, please consider this a petition therefor. The Commissioner is hereby authorized to charge any additional fee, which may be required, or credit any refund, to our Deposit Account No. 60-1438.

Amendments to the claims begin on Page 2 of this paper.

Remarks begin on Page 14 of this paper.

In the Claims:

This listing of claims will replace all prior versions, and listings, of claims in the application:

1. (Previously Presented) A method of operating a wireless terminal in communication with a wireless communication network, the method comprising:

receiving a first Medium Access Control (MAC) Control Element (CE) from the wireless communication network, wherein the first MAC CE includes a first bit map having a first bit map size with bits of the first bit map corresponding to respective component carriers of a first group of component carriers and indicating an activation status of the respective component carriers of the first group; and

receiving a second MAC CE from the wireless communication network, wherein the second MAC CE includes a second bit map having a second bit map size with bits of the second bit map corresponding to respective component carriers of a second group of component carriers and indicating an activation status of the respective component carriers of the second group, and wherein the first bit map size of the first bit map is different than the second bit map size of the second bit map.

2. (Previously Presented) The method of Claim 1 further comprising:

responsive to the first MAC CE, activating/deactivating component carriers of the first group of component carriers responsive to the first bit map; and

responsive to the second MAC CE, activating/deactivating component carriers of the second group of component carriers responsive to the second bit map.

3. (Previously Presented) The method of Claim 1, wherein a first Logical Channel Identity (LCID) is provided for the first MAC CE, a second LCID is provided for the second MAC CE, and the first and second LCIDs are different.

4. (Previously Presented) The method of Claim 3 wherein receiving the first MAC CE comprises receiving the first MAC CE and applying bits of the first bit map to respective

component carriers of the first group of component carriers responsive to the first LCID, and wherein receiving the second MAC CE comprises receiving the second MAC CE and applying bits of the second bit map to respective component carriers of the second group of component carriers responsive to the second LCID.

5. – 6. (Canceled)

7. (Previously Presented) The method of Claim 1, wherein the first group of component carriers includes a first group of secondary component carriers, wherein the second group of component carriers includes a second group of secondary component carriers, wherein the first and second groups of secondary component carriers are different, wherein each of the first group of secondary component carriers corresponds to a respective bit of the first bit map, and wherein each of the second group of secondary component carriers corresponds to a respective bit of the second bit map.

8. (Previously Presented) The method of Claim 7, wherein a respective component carrier index is associated with each secondary component carrier of the first group, wherein a respective component carrier index is associated with each secondary component carrier of the second group, wherein at least one of the component carrier indices of the secondary component carriers of the first group exceeds a threshold, wherein none of the component carrier indices of the secondary component carriers of the second group exceeds the threshold, and wherein the first bit map size of the first bit map is greater than the second bit map size of the second bit map.

9. (Previously Presented) A wireless terminal comprising:

a transceiver configured to provide radio communications with a wireless communication network over a radio interface; and

a processor coupled with the transceiver, wherein the processor is configured to:

receive a first Medium Access Control (MAC) Control Element (CE) through the transceiver from the wireless communication network, wherein the first MAC CE includes a first bit map having a first bit map size with bits of the first bit map

corresponding to respective component carriers of a first group of component carriers and indicating an activation status of the respective component carriers of the first group; and

receive a second MAC CE through the transceiver from the wireless communication network, wherein the second MAC CE includes a second bit map having a second bit map size with bits of the second bit map corresponding to respective component carriers of a second group of component carriers and indicating an activation status of the respective component carriers of the second group, and wherein the first bit map size of the first bit map is different than the second bit map size of the second bit map.

10. (Previously Presented) The wireless terminal of Claim 9, wherein the processor is further configured to:

activate/deactivate component carriers of the first group of component carriers responsive to the first MAC CE and the first bit map; and

activate/deactivate component carriers of the second group of component carriers responsive to the second MAC CE and the second bit map.

11. (Previously Presented) The wireless terminal of Claim 9, wherein a first Logical Channel Identity (LCID) is provided for the first MAC CE, a second LCID is provided for the second MAC CE, and the first and second LCIDs are different.

12. (Previously Presented) The wireless terminal of Claim 11, wherein receiving the first MAC CE comprises receiving the first MAC CE and applying bits of the first bit map to respective component carriers of the first group of component carriers responsive to the first LCID, and wherein receiving the second MAC CE comprises receiving the second MAC CE and applying bits of the second bit map to respective component carriers of the second group of component carriers responsive to the second LCID.

13. – 14. (Canceled)

15. (Previously Presented) The wireless terminal of Claim 9, wherein the first group of component carriers includes a first group of secondary component carriers, wherein the second group of component carriers includes a second group of secondary component carriers, wherein the first and second groups of secondary component carriers are different, wherein each of the first group of secondary component carriers corresponds to a respective bit of the first bit map, and wherein each of the second group of secondary component carriers corresponds to a respective bit of the second bit map.

16. (Previously Presented) The wireless terminal of Claim 15, wherein a respective component carrier index is associated with each secondary component carrier of the first group, wherein a respective component carrier index is associated with each secondary component carrier of the second group, wherein at least one of the component carrier indices of the secondary component carriers of the first group exceeds a threshold, wherein none of the component carrier indices of the secondary component carriers of the second group exceeds the threshold, and wherein the first bit map size of the first bit map is greater than the second bit map size of the second bit map.

17. (Previously Presented) A method of operating a node of a wireless communication network, the method comprising:

transmitting a first Medium Access Control (MAC) Control Element (CE) to a wireless terminal, wherein the first MAC CE includes a first bit map having a first bit map size with bits of the first bit map corresponding to respective component carriers of a first group of component carriers and indicating an activation status of the respective component carriers of the first group; and

transmitting a second MAC CE to the wireless terminal, wherein the second MAC CE includes a second bit map having a second bit map size with bits of the second bit map corresponding to respective component carriers of a second group of component carriers and indicating an activation status of the respective component carriers of the second group, and

wherein the first bit map size of the first bit map is different than the second bit map size of the second bit map.

18. (Previously Presented) The method of Claim 17, wherein a first Logical Channel Identity (LCID) is provided for the first MAC CE, a second LCID is provided for the second MAC CE, and the first and second LCIDs are different.

19. (Canceled)

20. (Previously Presented) The method of Claim 17, wherein the first group of component carriers includes a first group of secondary component carriers, wherein the second group of component carriers includes a second group of secondary component carriers, wherein the first and second groups of secondary component carriers are different, wherein each of the first group of secondary component carriers corresponds to a respective bit of the first bit map, and wherein each of the second group of secondary component carriers corresponds to a respective bit of the second bit map.

21. (Previously Presented) The method of Claim 20, wherein a respective component carrier index is associated with each secondary component carrier of the first group, wherein a respective component carrier index is associated with each secondary component carrier of the second group, wherein at least one of the component carrier indices of the secondary component carriers of the first group exceeds a threshold, wherein none of the component carrier indices of the secondary component carriers of the second group exceeds the threshold, and wherein the first bit map size of the first bit map is greater than the second bit map size of the second bit map.

22. (Previously Presented) A node of a wireless communication network, the node comprising:

a transceiver configured to provide radio communications with one or more wireless terminals over a radio interface; and

a processor coupled with the transceiver, wherein the processor is configured to:

transmit a first Medium Access Control (MAC) Control Element (CE) through the transceiver to a wireless terminal, wherein the first MAC CE includes a first bit map having a first bit map size with bits of the first bit map corresponding to respective component carriers of a first group of component carriers and indicating an activation status of the respective component carriers of the first group; and

transmit a second MAC CE through the transceiver to the wireless terminal, wherein the second MAC CE includes a second bit map having a second bit map size with bits of the second bit map corresponding to respective component carriers of a second group of component carriers and indicating an activation status of the respective component carriers of the second group, and wherein the first bit map size of the first bit map is different than the second bit map size of the second bit map.

23. (Previously Presented) The node of Claim 22, wherein a first Logical Channel Identity (LCID) is provided for the first MAC CE, a second LCID is provided for the second MAC CE, and the first and second LCIDs are different.

24. (Canceled)

25. (Previously Presented) The node of Claim 22, wherein the first group of component carriers includes a first group of secondary component carriers, wherein the second group of component carriers includes a second group of secondary component carriers, wherein the first and second groups of secondary component carriers are different, wherein each of the first group of secondary component carriers corresponds to a respective bit of the first bit map, and wherein each of the second group of secondary component carriers corresponds to a respective bit of the second bit map.

26. (Previously Presented) The node of Claim 25, wherein a respective component carrier index is associated with each secondary component carrier of the first group, wherein a respective component carrier index is associated with each secondary component carrier of the second group, wherein at least one of the component carrier indices of the secondary component

carriers of the first group exceeds a threshold, wherein none of the component carrier indices of the secondary component carriers of the second group exceeds the threshold, and wherein the first bit map size of the first bit map is greater than the second bit map size of the second bit map.

27. (Currently Amended) A method of operating a wireless terminal in communication with a wireless communication network, the method comprising:

receiving a medium access control, MAC, control element, CE, from the wireless communication network, wherein the MAC CE has one of a plurality of ~~plurality of~~ formats, wherein a first format of the plurality of formats has a first bit map size and the first format is associated with a first Logical Channel Identity (LCID), wherein a second format of the plurality of formats has a second bit map size and the second format is associated with a second LCID, wherein the first and second bit map sizes are different, and wherein the first and second LCIDs are different; and

responsive to receiving one of the first and second LCIDs together with the MAC CE, applying a bit map of the MAC CE using one of the first and second bit map sizes to activate/deactivate component carriers of a group of component carriers based on the one of the first and second LCIDs received together with the MAC CE.

28. (Currently Amended) The method of Claim 27, wherein the first LCID ~~LICD~~ is received together with the MAC CE, wherein the MAC CE has the first format, wherein the bit map has the first bit map size of the first format, and wherein applying the bit map comprises applying the bit map of the MAC CE using the first bit map size to activate/deactivate respective ones of the component carriers of the group of component carriers responsive to receiving the first LCID together with the MAC CE.

29. (Previously Presented) The method of Claim 28, wherein the group of component carriers includes a group of secondary component carriers, and wherein each of the group of secondary component carriers corresponds to a respective bit of the bit map of the MAC CE.

30. (Previously Presented) The method of Claim 29, wherein a respective component carrier index is associated with each component carrier of the group of secondary component carriers, wherein at least one of the component carrier indices of the component carriers of the group of secondary component carriers exceeds a threshold, and wherein the first bit map size is greater than the second bit map size.

31. (Previously Presented) The method of Claim 28, wherein the MAC CE is a first MAC CE, wherein the bit map is a first bit map, and wherein the component carriers are first component carriers of a first group, the method further comprising:

receiving a second MAC CE from the wireless communication network, wherein the second MAC CE is received together with the second LCID, wherein the second MAC CE has the second format, and wherein second MAC CE has a second bit map with the second bit map size of the second format; and

responsive to receiving the second LCID together with the second MAC CE, applying the second bit map of the second MAC CE using the second bit map size to activate/deactivate second component carriers of a second group of component carriers.

32. (Currently Amended) A wireless terminal comprising:

a transceiver configured to provide radio communications with a wireless communication network over a radio interface; and

a processor coupled with the transceiver, wherein the processor is configured to:

receive a medium access control, MAC, control element, CE, from the wireless communication network, wherein the MAC CE has one of a plurality of ~~plurality of~~ formats, wherein a first format of the plurality of formats has a first bit map size and the first format is associated with a first Logical Channel Identity (LCID), wherein a second format of the plurality of formats has a second bit map size and the second format is associated with a second LCID, wherein the first and second bit map sizes are different, and wherein the first and second LCIDs are different; and

responsive to receiving one of the first and second LCIDs together with the MAC CE, applying a bit map of the MAC CE using one of the first and second bit map sizes to

activate/deactivate component carriers of a group of component carriers based on the one of the first and second LCIDs received together with the MAC CE.

33. (Currently Amended) The wireless terminal of Claim 32, wherein the first LCID ~~LICD~~ is received together with the MAC CE, wherein the MAC CE has the first format, wherein the bit map has the first bit map size of the first format, and wherein applying the bit map comprises applying the bit map of the MAC CE using the first bit map size to activate/deactivate respective ones of the component carriers of the group of component carriers responsive to receiving the first LCID together with the MAC CE.

34. (Previously Presented) The wireless terminal of Claim 33, wherein the group of component carriers includes a group of secondary component carriers, and wherein each of the group of secondary component carriers corresponds to a respective bit of the bit map of the MAC CE.

35. (Previously Presented) The wireless terminal of Claim 34, wherein a respective component carrier index is associated with each component carrier of the group of secondary component carriers, wherein at least one of the component carrier indices of the component carriers of the group of secondary component carriers exceeds a threshold, and wherein the first bit map size is greater than the second bit map size.

36. (Previously Presented) The wireless terminal of Claim 33, wherein the MAC CE is a first MAC CE, wherein the bit map is a first bit map, and wherein the component carriers are first component carriers of a first group, wherein the processor is further configured to:

receive a second MAC CE from the wireless communication network, wherein the second MAC CE is received together with the second LCID, wherein the second MAC CE has the second format, and wherein second MAC CE has a second bit map with the second bit map size of the second format; and

apply the second bit map of the second MAC CE using the second bit map size to activate/deactivate second component carriers of a second group of component carriers responsive to receiving the second LCID together with the second MAC CE.

37. (Currently Amended) A method of operating a node of a wireless communication network, the method comprising:

selecting one of a first format and a second format ~~formats~~ for a medium access control, MAC, control element, CE, wherein the first format ~~of the plurality of formats~~ has a first bit map size and the first format is associated with a first Logical Channel Identity ~~Identify~~ (LCID), wherein the second format has a second bit map size and the second format is associated with a second LCID, wherein the first and second bit map sizes are different, and wherein the first and second LCIDs are different; and

transmitting the MAC CE to a wireless terminal together with one of the first and second LCIDs associated with the one of the first and second formats selected for the MAC CE, wherein the MAC CE includes a bit map having one of the first and second bit map sizes associated with the one of the first format and the second format ~~plurality of formats~~ selected for the MAC CE, wherein bits of the bit map correspond to respective component carriers of a group of component carriers and includes an activation status of the respective component carriers of the group.

38. (Currently Amended) The method of Claim 37, wherein selecting comprises selecting the first format for the MAC CE, wherein the first LCID ~~LICD~~ is transmitted together with the MAC CE, wherein the MAC CE has the first format, and wherein the bit map has the first bit map size of the first format.

39. (Previously Presented) The method of Claim 38, wherein the group of component carriers includes a group of secondary component carriers, and wherein each of the group of secondary component carriers corresponds to a respective bit of the bit map of the MAC CE.

40. (Previously Presented) The method of Claim 39, wherein a respective component carrier index is associated with each component carrier of the group of secondary component

carriers, wherein the first bit map size is greater than the second bit map size, and wherein the first format for the MAC CE is selected responsive to determining that at least one of the component carrier indices of the component carriers of the group of secondary component carriers exceeds a threshold.

41. (Previously Presented) The method of Claim 38, wherein the MAC CE is a first MAC CE, wherein the bit map is a first bit map, and wherein the component carriers are first component carriers of a first group, the method further comprising:

selecting the second format for a second MAC CE; and

transmitting the second MAC CE to the wireless terminal together with the second LCID associated with the second format, wherein the second MAC CE includes a bit map having the second bit map size associated with the second format selected for the MAC CE, wherein bits of the second bit map correspond to respective component carriers of a second group of component carriers and includes an activation status of the respective component carriers of the second group.

42. (Currently Amended) A node of a wireless communication network comprising:

a transceiver configured to provide radio communications with a wireless terminal over a radio interface; and

a processor coupled with the transceiver, wherein the processor is configured to:

select one of a first format and a second format ~~formats~~ for a medium access control, MAC, control element, CE, wherein the first format ~~of the plurality of formats~~ has a first bit map size and the first format is associated with a first Logical Channel Identity ~~Identify~~ (LCID), wherein the second format has a second bit map size and the second format is associated with a second LCID, wherein the first and second bit map sizes are different, and wherein the first and second LCIDs are different; and

transmit the MAC CE to a wireless terminal together with one of the first and second LCIDs associated with the one of the first and second formats selected for the MAC CE, wherein the MAC CE includes a bit map having one of the first and second bit map sizes associated with the one of the first format and the second format ~~plurality of~~

~~formats~~ selected for the MAC CE, wherein bits of the bit map correspond to respective component carriers of a group of component carriers and includes an activation status of the respective component carriers of the group.

43. (Currently Amended) The node of Claim 42, wherein selecting comprises selecting the first format for the MAC CE, wherein the first LCID ~~LICD~~ is transmitted together with the MAC CE, wherein the MAC CE has the first format, and wherein the bit map has the first bit map size of the first format.

44. (Previously Presented) The node of Claim 43, wherein the group of component carriers includes a group of secondary component carriers, and wherein each of the group of secondary component carriers corresponds to a respective bit of the bit map of the MAC CE.

45. (Previously Presented) The node of Claim 44, wherein a respective component carrier index is associated with each component carrier of the group of secondary component carriers, wherein the first bit map size is greater than the second bit map size, and wherein the first format for the MAC CE is selected responsive to determining that at least one of the component carrier indices of the component carriers of the group of secondary component carriers exceeds a threshold.

46. (Previously Presented) The node of Claim 43, wherein the MAC CE is a first MAC CE, wherein the bit map is a first bit map, and wherein the component carriers are first component carriers of a first group, wherein the processor is further configured to:

select the second format for a second MAC CE; and

transmit the second MAC CE to the wireless terminal together with the second LCID associated with the second format, wherein the second MAC CE includes a bit map having the second bit map size associated with the second format selected for the MAC CE, wherein bits of the second bit map correspond to respective component carriers of a second group of component carriers and includes an activation status of the respective component carriers of the second group.

REMARKS

Applicant has amended the specification to address minor informalities noted in the claims. The present claim amendments (that are presented before payment of the issue fee) embody merely the correction of formal matters in the claims without changing the scope thereof. Entry of the present claim amendments before issuance of the present application is thus requested in accordance with 37 C.F.R. Sec. 1.312 and MPEP, Section 714.16.

Entry of this Preliminary Amendment and continued allowance of the application are respectfully requested. If, in the opinion of the Examiner, a telephonic conference would expedite the examination of this matter, the Examiner is invited to call the undersigned attorney at 984-219-3455.

Respectfully submitted,

/Scott C. Hatfield/

Scott C. Hatfield
Registration No. 38,176
Attorney for Applicant

Customer Number 146825
Sage Patent Group
P.O. Box 30789
Raleigh, NC 27622
984-219-3358
984-538-0416 (Fax)

Electronic Acknowledgement Receipt	
EFS ID:	36913835
Application Number:	16203450
International Application Number:	
Confirmation Number:	2596
Title of Invention:	WIRELESS TERMINALS, NODES OF WIRELESS COMMUNICATION NETWORKS, AND METHODS OF OPERATING THE SAME
First Named Inventor/Applicant Name:	Mattias TAN BERGSTRÖM
Customer Number:	146825
Filer:	Scott C. Hatfield/Cheryl Ramey
Filer Authorized By:	Scott C. Hatfield
Attorney Docket Number:	9900-45697US4
Receipt Date:	19-AUG-2019
Filing Date:	28-NOV-2018
Time Stamp:	15:57:03
Application Type:	Utility under 35 USC 111(a)

Payment information:

Submitted with Payment	no

File Listing:

Document Number	Document Description	File Name	File Size(Bytes)/ Message Digest	Multi Part /.zip	Pages (if appl.)
1		P45697_US4_2019_08_19_Amendment_After_Allowance.pdf	74967 cb81bd21295b003b27a2c9f28efaf9db99057169	yes	14

	Multipart Description/PDF files in .zip description		
	Document Description	**Start**	**End**
	Amendment after Notice of Allowance (Rule 312)	1	1
	Claims	2	13
	Applicant Arguments/Remarks Made in an Amendment	14	14
Warnings:			
Information:			
	Total Files Size (in bytes):	74967	

This Acknowledgement Receipt evidences receipt on the noted date by the USPTO of the indicated documents, characterized by the applicant, and including page counts, where applicable. It serves as evidence of receipt similar to a Post Card, as described in MPEP 503.

New Applications Under 35 U.S.C. 111
If a new application is being filed and the application includes the necessary components for a filing date (see 37 CFR 1.53(b)-(d) and MPEP 506), a Filing Receipt (37 CFR 1.54) will be issued in due course and the date shown on this Acknowledgement Receipt will establish the filing date of the application.
National Stage of an International Application under 35 U.S.C. 371
If a timely submission to enter the national stage of an international application is compliant with the conditions of 35 U.S.C. 371 and other applicable requirements a Form PCT/DO/EO/903 indicating acceptance of the application as a national stage submission under 35 U.S.C. 371 will be issued in addition to the Filing Receipt, in due course.
New International Application Filed with the USPTO as a Receiving Office
If a new international application is being filed and the international application includes the necessary components for an international filing date (see PCT Article 11 and MPEP 1810), a Notification of the International Application Number and of the International Filing Date (Form PCT/RO/105) will be issued in due course, subject to prescriptions concerning national security, and the date shown on this Acknowledgement Receipt will establish the international filing date of the application.

Doc Code: IFEE PTOL/85B-EFS

Document Description: Issue Fee Payment (PTO-85B)

Issue Fee Transmittal Form

Application Number	Filing Date	First Named Inventor	Atty. Docket No.	Confirmation No.
16203450	28-Nov-2018	Mattias TAN BERGSTRÖM	9900-45697US4	2596

TITLE OF INVENTION :

WIRELESS TERMINALS, NODES OF WIRELESS COMMUNICATION NETWORKS, AND METHODS OF OPERATING THE SAME

Entity Status	Application Type	Art Unit	Class - Subclass	EXAMINER
Regular Undiscounted	Utility under 35 USC 111(a)	2641	450000	KIET DOAN

Issue Fee Due	Publication Due	Total Fee(s) Due	Date Due	Prev. Paid Fee
$1000	$0	$1000	05-Sep-2019	$0

1.Change of Correspondence Address and/or Indication Of Fee Address (37 CFR 1.33 & 1.363)

Current Correspondence Address:	Current Indicated Fee Address :
146825 Sage Patent Group/Telefonaktiebolaget LM Ericsson PO BOX 30789 RALEIGH NC 27622-0789 UNITED STATES 984-219-3444 instructions@sagepat.com	
☐ Change of correspondence address requested, system generated AIA/122-EFS form attached	☐ Fee Address indication requested, system generated SB/47-EFS form attached

2.Entity Status

Change in Entity Status

○ Applicant certifying micro entity status; system generated Micro Entity certification form attached. See 37 CFR 1.29.
Note: Absent a valid certification of micro entity status, issue fee payment in the micro entity amount will not be accepted at the risk of application abandonment. If this box is checked, you will be prompted to choose a micro entity status on the gross income basis (37 CFR 1.29(a)) or the institution of higher education basis (37 CFR 1.29(d)), and make the applicable certification online.

○ Applicant asserting small entity status. See 37 CFR 1.27.
Note: If the application was previously under micro entity status, checking this box will be taken to be a notification of loss of entitlement to micro entity status.

◉ Applicant changing to regular undiscounted fee status.
Note: Checking this box will be taken to be a notification of loss of entitlement to small or micro entity status, as applicable.

Doc Code: IFEE PTOL/85B-EFS

Document Description: Issue Fee Payment (PTO-85B)

3.The Following Fee(s) Are Submitted:

☒ Issue Fee	☐ I authorize USPTO to apply my previously paid issue fee to the current fees due
☐ Publication Fee	☐ The Director is hereby authorized to apply my previously paid issue fee to the current fee due and to charge deficient fees to Deposit Account Number _____
☐ Advance Order - # of copies _____	☒ If **in addition to** the payment of the issue fee amount submitted with this form, there are any discrepancies in any amount(s) due, the Director is authorized to charge any deficiency or credit any overpayment, to Deposit Account Number 601438 . The **issue fee must be submitted** with this form. **If payment of the issue fee does not accompany this form, checking this box and providing a deposit account number will NOT be effective to satisfy full payment of the fee(s) due.**

4.Firm and/or Attorney Names To Be Printed

NOTE: If no name is listed, no name will be printed
For printing on the patent front page, list to be displayed as entered

1. SAGE PATENT GROUP
2.
3.

5.Assignee Name(s) and Residence Data To Be Printed

PLEASE NOTE: Unless an assignee is identified below, no assignee data will appear on the patent. If an assignee is identified below, the document has been filed for recordation as set forth in 37 CFR 3.11. Completion of this form is NOT a substitute for filing an assignment.

Name	City	State	Country	Category
TELEFONAKTIEBOLAGET LM ERICSSON (PUBL)	Stockholm		sweden	corporation

6.Signature

I certify, in accordance with 37 CFR 1.4(d)(4) that I am an attorney or agent registered to practice before the Patent and Trademark Office who has filed and has been granted power of attorney in this application. I also certify that this Fee(s) Transmittal form is being transmitted to the USPTO via EFS-WEB on the date indicated below.

Signature	/Scott C. Hatfield/	**Date**	08-30-2019
Name	Scott C. Hatfield	**Registration Number**	38176

WEB IFEE 1.0

Electronic Patent Application Fee Transmittal

Application Number:	16203450
Filing Date:	28-Nov-2018
Title of Invention:	WIRELESS TERMINALS, NODES OF WIRELESS COMMUNICATION NETWORKS, AND METHODS OF OPERATING THE SAME
First Named Inventor/Applicant Name:	Mattias TAN BERGSTRÖM
Filer:	Scott C. Hatfield/Cheryl Ramey
Attorney Docket Number:	9900-45697US4

Filed as Large Entity

Filing Fees for Utility under 35 USC 111(a)

Description	Fee Code	Quantity	Amount	Sub-Total in USD($)
Basic Filing:				
UTILITY APPL ISSUE FEE	1501	1	1000	1000
PUBL. FEE- EARLY, VOLUNTARY, OR NORMAL	1504	1	0	0
Pages:				
Claims:				
Miscellaneous-Filing:				
Petition:				
Patent-Appeals-and-Interference:				

Description	Fee Code	Quantity	Amount	Sub-Total in USD($)
Post-Allowance-and-Post-Issuance:				
Extension-of-Time:				
Miscellaneous:				
		Total in USD ($)		**1000**

Electronic Acknowledgement Receipt	
EFS ID:	37028952
Application Number:	16203450
International Application Number:	
Confirmation Number:	2596
Title of Invention:	WIRELESS TERMINALS, NODES OF WIRELESS COMMUNICATION NETWORKS, AND METHODS OF OPERATING THE SAME
First Named Inventor/Applicant Name:	Mattias TAN BERGSTRÖM
Customer Number:	146825
Filer:	Scott C. Hatfield/Cheryl Ramey
Filer Authorized By:	Scott C. Hatfield
Attorney Docket Number:	9900-45697US4
Receipt Date:	30-AUG-2019
Filing Date:	28-NOV-2018
Time Stamp:	11:27:35
Application Type:	Utility under 35 USC 111(a)

Payment information:

Submitted with Payment	yes
Payment Type	CARD
Payment was successfully received in RAM	$1000
RAM confirmation Number	E20198TB27325457
Deposit Account	
Authorized User	
The Director of the USPTO is hereby authorized to charge indicated fees and credit any overpayment as follows:	

File Listing:

Document Number	Document Description	File Name	File Size(Bytes)/ Message Digest	Multi Part /.zip	Pages (if appl.)
1	Issue Fee Payment (PTO-85B)	Web85b.pdf	46024 e81c6e4a4f530a42f452b13c5c00976ac7af32d5	no	2
Warnings:					
Information:					
2	Fee Worksheet (SB06)	fee-info.pdf	32282 5f17e552c08aed80221e84d9e8126675188010c5	no	2
Warnings:					
Information:					
		Total Files Size (in bytes):	78306		

This Acknowledgement Receipt evidences receipt on the noted date by the USPTO of the indicated documents, characterized by the applicant, and including page counts, where applicable. It serves as evidence of receipt similar to a Post Card, as described in MPEP 503.

New Applications Under 35 U.S.C. 111
If a new application is being filed and the application includes the necessary components for a filing date (see 37 CFR 1.53(b)-(d) and MPEP 506), a Filing Receipt (37 CFR 1.54) will be issued in due course and the date shown on this Acknowledgement Receipt will establish the filing date of the application.
National Stage of an International Application under 35 U.S.C. 371
If a timely submission to enter the national stage of an international application is compliant with the conditions of 35 U.S.C. 371 and other applicable requirements a Form PCT/DO/EO/903 indicating acceptance of the application as a national stage submission under 35 U.S.C. 371 will be issued in addition to the Filing Receipt, in due course.
New International Application Filed with the USPTO as a Receiving Office
If a new international application is being filed and the international application includes the necessary components for an international filing date (see PCT Article 11 and MPEP 1810), a Notification of the International Application Number and of the International Filing Date (Form PCT/RO/105) will be issued in due course, subject to prescriptions concerning national security, and the date shown on this Acknowledgement Receipt will establish the international filing date of the application.

UNITED STATES PATENT AND TRADEMARK OFFICE

UNITED STATES DEPARTMENT OF COMMERCE
United States Patent and Trademark Office
Address: COMMISSIONER FOR PATENTS
P.O. Box 1450
Alexandria, Virginia 22313-1450
www.uspto.gov

APPLICATION NO.	FILING DATE	FIRST NAMED INVENTOR	ATTORNEY DOCKET NO.	CONFIRMATION NO.
16/203,450	11/28/2018	Mattias TAN BERGSTRÖM	9900-45697US4	2596

146825 7590 09/04/2019

Sage Patent Group/Telefonaktiebolaget LM Ericsson
PO BOX 30789
RALEIGH, NC 27622-0789

EXAMINER
DOAN, KIET M

ART UNIT	PAPER NUMBER
2641	

NOTIFICATION DATE	DELIVERY MODE
09/04/2019	ELECTRONIC

Please find below and/or attached an Office communication concerning this application or proceeding.

The time period for reply, if any, is set in the attached communication.

Notice of the Office communication was sent electronically on above-indicated "Notification Date" to the following e-mail address(es):

instructions@sagepat.com

Response to Rule 312 Communication	Application No.	Applicant(s)	
	16/203,450	TAN BERGSTRÖM et al.	
	Examiner	Art Unit	AIA (FITF) Status
	KIET M DOAN	2641	Yes

-- The MAILING DATE of this communication appears on the cover sheet with the correspondence address --

1. ☑ The amendment filed on 19 August 2019 under 37 CFR 1.312 has been considered, and has been:
   a) ☑ entered.
   b) ☐ entered as directed to matters of form not affecting the scope of the invention.
   c) ☐ disapproved because the amendment was filed after the payment of the issue fee.
      Any amendment filed after the date the issue fee is paid must be accompanied by a petition under 37 CFR 1.313(c)(1) and the required fee to withdraw the application from issue.
   d) ☐ disapproved. See explanation below.
   e) ☐ entered in part. See explanation below.

/KIET M DOAN/
Primary Examiner, Art Unit 2641

OK TO ENTER /KD/

Attorney Docket No. 9900-45697US4 PATENT

IN THE UNITED STATES PATENT AND TRADEMARK OFFICE

In re: Mattias TAN BERGSTRÖM et al. Conf. No.: 2596
Application No.: 16/203,450 Examiner: Doan, Kiet M.
Filed: November 28, 2018 Art Unit: 2641
For: WIRELESS TERMINALS, NODES OF WIRELESS COMMUNICATION NETWORKS, AND METHODS OF OPERATING THE SAME

Date: June 18, 2019

Mail Stop Issue Fee
Commissioner for Patents
Box 1450
Alexandria, VA 22313-1450

AMENDMENT AFTER ALLOWANCE PURSUANT TO 37 C.F.R. SECTION 1.312 AND MPEP SECTION 714.16

Sir:

Please enter the present Amendment After Allowance before issuance of the present application.

If any extension of time for the accompanying response or submission is required, please consider this a petition therefor. The Commissioner is hereby authorized to charge any additional fee, which may be required, or credit any refund, to our Deposit Account No. 60-1438.

Amendments to the claims begin on Page 2 of this paper.

Remarks begin on Page 14 of this paper.

UNITED STATES PATENT AND TRADEMARK OFFICE

UNITED STATES DEPARTMENT OF COMMERCE
United States Patent and Trademark Office
Address: COMMISSIONER FOR PATENTS
P.O. Box 1450
Alexandria, Virginia 22313-1450
www.uspto.gov

APPLICATION NO.	ISSUE DATE	PATENT NO.	ATTORNEY DOCKET NO.	CONFIRMATION NO.
16/203,450	10/22/2019	10454655	9900-45697US4	2596

146825 7590 10/02/2019

Sage Patent Group/Telefonaktiebolaget LM Ericsson
PO BOX 30789
RALEIGH, NC 27622-0789

ISSUE NOTIFICATION

The projected patent number and issue date are specified above.

Determination of Patent Term Adjustment under 35 U.S.C. 154 (b)
(application filed on or after May 29, 2000)

The Patent Term Adjustment is 0 day(s). Any patent to issue from the above-identified application will include an indication of the adjustment on the front page.

If a Continued Prosecution Application (CPA) was filed in the above-identified application, the filing date that determines Patent Term Adjustment is the filing date of the most recent CPA.

Applicant will be able to obtain more detailed information by accessing the Patent Application Information Retrieval (PAIR) WEB site (http://pair.uspto.gov).

Any questions regarding the Patent Term Extension or Adjustment determination should be directed to the Office of Patent Legal Administration at (571)-272-7702. Questions relating to issue and publication fee payments should be directed to the Application Assistance Unit (AAU) of the Office of Data Management (ODM) at (571)-272-4200.

APPLICANT(s) (Please see PAIR WEB site http://pair.uspto.gov for additional applicants):

Telefonaktiebolaget LM Ericsson (publ), Stockholm, SWEDEN;
Mattias TAN BERGSTRÖM, Stockholm, SWEDEN;
Riikka SUSITAIVAL, Helsinki, FINLAND;
Magnus STATTIN, Upplands Väsby, SWEDEN;

The United States represents the largest, most dynamic marketplace in the world and is an unparalleled location for business investment, innovation, and commercialization of new technologies. The USA offers tremendous resources and advantages for those who invest and manufacture goods here. Through SelectUSA, our nation works to encourage and facilitate business investment. To learn more about why the USA is the best country in the world to develop technology, manufacture products, and grow your business, visit SelectUSA.gov.

IR103 (Rev. 10/09)