Trials@uspto.gov
571-272-7822

Paper 44
Date: May 5, 2023

UNITED STATES PATENT AND TRADEMARK OFFICE

BEFORE THE PATENT TRIAL AND APPEAL BOARD

APPLE INC.,
Petitioner,

v.

SCRAMOGE TECHNOLOGY LTD.,
Patent Owner.

IPR2022-00118
Patent 10,804,740 B2

Before JAMESON LEE, KARL D. EASTHOM, and
BRIAN J. McNAMARA, *Administrative Patent Judges.*

McNAMARA, *Administrative Patent Judge*.

JUDGMENT
Final Written Decision
Determining No Challenged Claims Unpatentable
Dismissing Patent Owner's Motion to Amend
35 U.S.C. § 318(a)

I. BACKGROUND

On May 12, 2022, in response to a Petition (Paper 2, "Pet.") we instituted an *inter partes* review of claims 6, 7, 16, 17, 19, and 20 of U. S. Patent No. 10,804,740 B2 ("the '740 patent"). Paper 9 ("Dec. to Inst."). Patent Owner filed a Patent Owner Response (Paper 17, "PO Resp.") and a Motion to Amend (Paper 16). Petitioner filed a Petitioner Reply (Paper 22, "Reply") and an Opposition to Patent Owner's Motion to Amend (Paper 23, "Opp. to MTA"). On November 23, 2022, we entered Preliminary Guidance (Paper 26, "Prelim. Guid."). Patent Owner filed a Sur-reply (Paper 28, "Sur-reply") and a Revised Motion to Amend (Paper 28, "Rev'd. MTA"). Petitioner filed an Opposition to Patent Owner's Revised Motion to Amend (Paper 34, "Rev'd. MTA Opp.") and Patent Owner filed a Reply to Petitioner's Opposition (Paper 37, "Reply to Rev'd. MTA Opp."). A transcript of an oral hearing held on March 9, 2023 (Paper 43, "Hr'g. Tr.") has been entered into the record.

We have jurisdiction under 35 U.S.C. § 6. This Final Written Decision is issued pursuant to 35 U.S.C. §318(a). We base our decision on the preponderance of the evidence. 35 U.S.C. § 316(e); 37 C.F.R. § 42.1(d).

Having reviewed the arguments of the parties and the supporting evidence, we conclude that Petitioner has not demonstrated by a preponderance of the evidence that the challenged claims are unpatentable. Having determined that no challenged claims are unpatentable, we dismiss Patent Owner's Revised Motion to Amend as moot.

II. THE '740 PATENT

The '740 patent concerns a wireless power receiver used for wireless power transmission, whose thickness is reduced by directly disposing a coil unit on a top surface of a magnetic substrate or inside the magnetic substrate.

Ex. 1001, 1:21–27, 1:54–56, 1:65–67. Figure 1 of the ’740 patent is reproduced below.

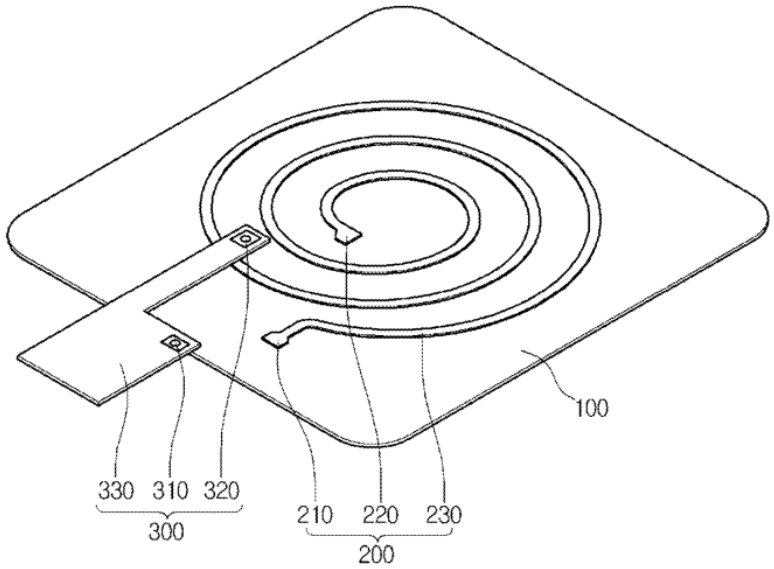

FIG.1

As shown in annotated Figure 1, the wireless power receiver includes magnetic substrate 100 that concentrates a magnetic field received by electromagnetic induction or resonance from its transmission side into coil 200, which may adhere to the substrate via an adhesion layer (not shown). *See id.* at 4:23–5:37, Figs. 2–3. Connecting unit 300, which may be directly disposed on coil 200, connects coil 200 via terminals 210, 310 and 220, 320, to a wireless power receiving circuit that may include a rectifier and a smoothing circuit to convert AC to DC power to be transferred to a load (not shown). *Id.* at 5:19–37, 6:30–39. According to the ’740 patent, “the thickness of the wireless power receiver can be remarkably reduced by directly disposing the coil unit on a top surface of the magnetic substrate.” *Id.* at 2:29–32.

Figure 11 of the ’740 patent is reproduced below.

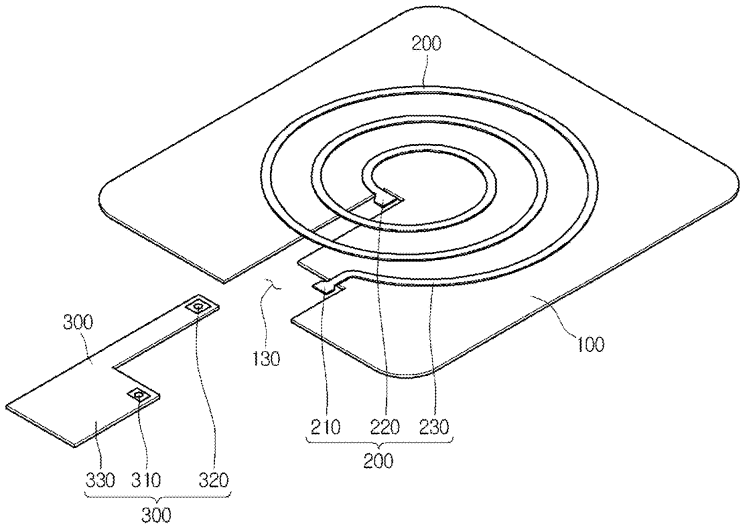

FIG.11

Although similar to the embodiment in Figure 1, the Figure 11 embodiment includes receiving space 130 in magnetic substrate 100. *Id.* at 2:19–28, 8:30–57, 8:19–57. In the embodiment of Figure 11, connecting unit 300, which may be of equal or lesser thickness than magnetic substrate 100, may be disposed in receiving space 130. *Id.* at 8:44–49. Another difference between the Figure 1 and Figure 11 embodiments is that in the Figure 11 embodiment, connecting unit 300 may be disposed under coil 200. *Id.* at 8:32–39.

III. ILLUSTRATIVE CLAIM

Independent claim 6, reproduced below with the paragraph designations used in the Petition, is illustrative of the subject matter of the ’740 patent.

[6.0] A wireless power receiver, comprising:
- [6.1] an adhesive layer comprising a receiving space;
- [6.2] a coil on the adhesive layer;
- [6.3] a first connection terminal connected to an outer end of the coil;

[6.4] a second connection terminal connected to an inner end of the coil; and
[6.5] a connecting unit overlapping the receiving space in a vertical direction perpendicular to the adhesive layer,
[6.6] wherein the connecting unit comprises: a third connection terminal connected to the first connection terminal;
[6.7] [wherein the connecting unit comprises:] a fourth connection terminal connected to the second connection terminal; and
[6.8] [wherein the connecting unit comprises:] a wiring layer connected to the third connection terminal.

IV. GROUNDS OF INSTITUTION

Petitioner asserts that claims 6, 7, 16, 17, 19, 20 would have been unpatentable on the following grounds:

Claim(s) Challenged	35 U.S.C. §	Reference(s)/Basis
6, 7, 16, 17, 19, 20	103	Hasegawa[1]

V. CONSTRUCTION OF CHALLENGED CLAIMS

A. *Introduction*

Prior to Institution, neither party proposed a special definition or explicit construction of any claim term. PO Resp. 8. In its Patent Owner Response, Patent Owner identifies a claim construction dispute and proposes constructions for several terms, as discussed below. *Id.* at 8–23.

We interpret claim terms using "the same claim construction standard that would be used to construe the claim in a civil action under 35 U.S.C. 282(b)." 37 C.F.R. § 42.100(b) (2019). In this context, claim terms "are generally given their ordinary and customary meaning" as understood by a person of ordinary skill in the art in question at the time of the invention.

[1] U.S. Patent Application Publication 2009/0021212 (Ex. 1005).

DOCKET ALARM

Explore Litigation Insights

Docket Alarm provides insights to develop a more informed litigation strategy and the peace of mind of knowing you're on top of things.

Real-Time Litigation Alerts

Keep your litigation team up-to-date with **real-time alerts** and advanced team management tools built for the enterprise, all while greatly reducing PACER spend.

Our comprehensive service means we can handle Federal, State, and Administrative courts across the country.

Advanced Docket Research

With over 230 million records, Docket Alarm's cloud-native docket research platform finds what other services can't. Coverage includes Federal, State, plus PTAB, TTAB, ITC and NLRB decisions, all in one place.

Identify arguments that have been successful in the past with full text, pinpoint searching. Link to case law cited within any court document via Fastcase.

Analytics At Your Fingertips

Learn what happened the last time a particular judge, opposing counsel or company faced cases similar to yours.

Advanced out-of-the-box PTAB and TTAB analytics are always at your fingertips.

API

Docket Alarm offers a powerful API (application programming interface) to developers that want to integrate case filings into their apps.

LAW FIRMS

Build custom dashboards for your attorneys and clients with live data direct from the court.

Automate many repetitive legal tasks like conflict checks, document management, and marketing.

FINANCIAL INSTITUTIONS

Litigation and bankruptcy checks for companies and debtors.

E-DISCOVERY AND LEGAL VENDORS

Sync your system to PACER to automate legal marketing.