US007366101B1

(12) **United States Patent**
Varier et al.

(10) **Patent No.: US 7,366,101 B1**
(45) **Date of Patent: Apr. 29, 2008**

(54) **NETWORK TRAFFIC SYNCHRONIZATION MECHANISM**

(75) Inventors: **Roopesh R. Varier**, Sunnyvale, CA (US); **David Jacobson**, Durham, NC (US); **Guy Riddle**, Los Gatos, CA (US)

(73) Assignee: **Packeteer, Inc.**, Cupertino, CA (US)

(*) Notice: Subject to any disclaimer, the term of this patent is extended or adjusted under 35 U.S.C. 154(b) by 916 days.

(21) Appl. No.: **10/611,573**

(22) Filed: **Jun. 30, 2003**

(51) **Int. Cl.**

H04J 3/14	(2006.01)
H04J 3/06	(2006.01)
H04L 12/26	(2006.01)
H04L 12/28	(2006.01)
H04L 12/56	(2006.01)

(52) **U.S. Cl.** **370/241**; 370/401; 370/503

(58) **Field of Classification Search** 370/216–218, 370/241, 242, 401, 503

See application file for complete search history.

(56) **References Cited**

U.S. PATENT DOCUMENTS

2002/0167960 A1* 11/2002 Garcia-Luna-Aceves 370/442

2003/0043792 A1* 3/2003 Carpini et al. 370/386

* cited by examiner

Primary Examiner—Kevin C. Harper
(74) *Attorney, Agent, or Firm*—Mark J. Spolyar

(57) **ABSTRACT**

Methods, apparatuses and systems directed to a network traffic synchronization mechanism facilitating the deployment of network devices in redundant network topologies. In certain embodiments, when a first network device directly receives network traffic, it copies the network traffic and transmits it to at least one partner network device. The partner network device processes the copied network traffic, just as if it had received it directly, but, in one embodiment, discards the traffic before forwarding it on to its destination. In one embodiment, the partner network devices are operative to exchange directly received network traffic. As a result, the present invention provides enhanced reliability and seamless failover. Each unit, for example, is ready at any time to take over for the other unit should a failure occur. As discussed below, the network traffic synchronization mechanism can be applied to a variety of network devices, such as firewalls, gateways, network routers, and bandwidth management devices.

34 Claims, 12 Drawing Sheets

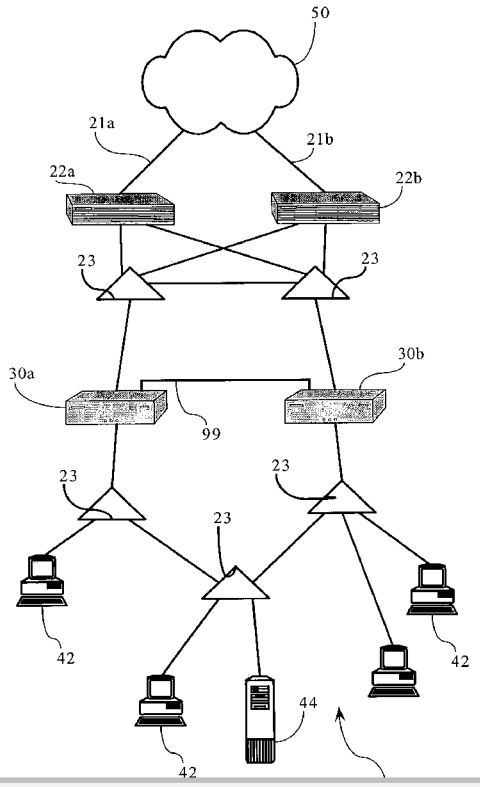

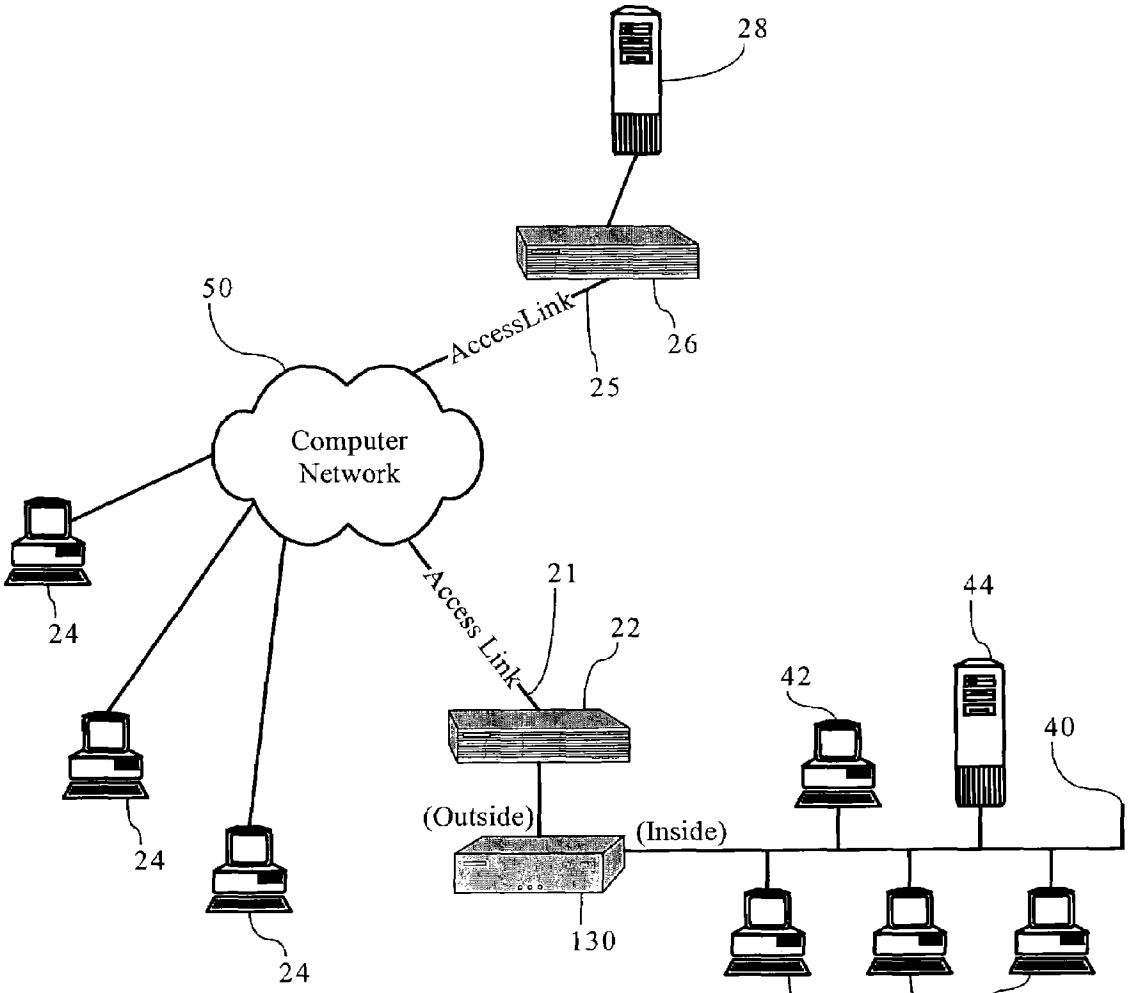

Fig._1A
(Prior Art)

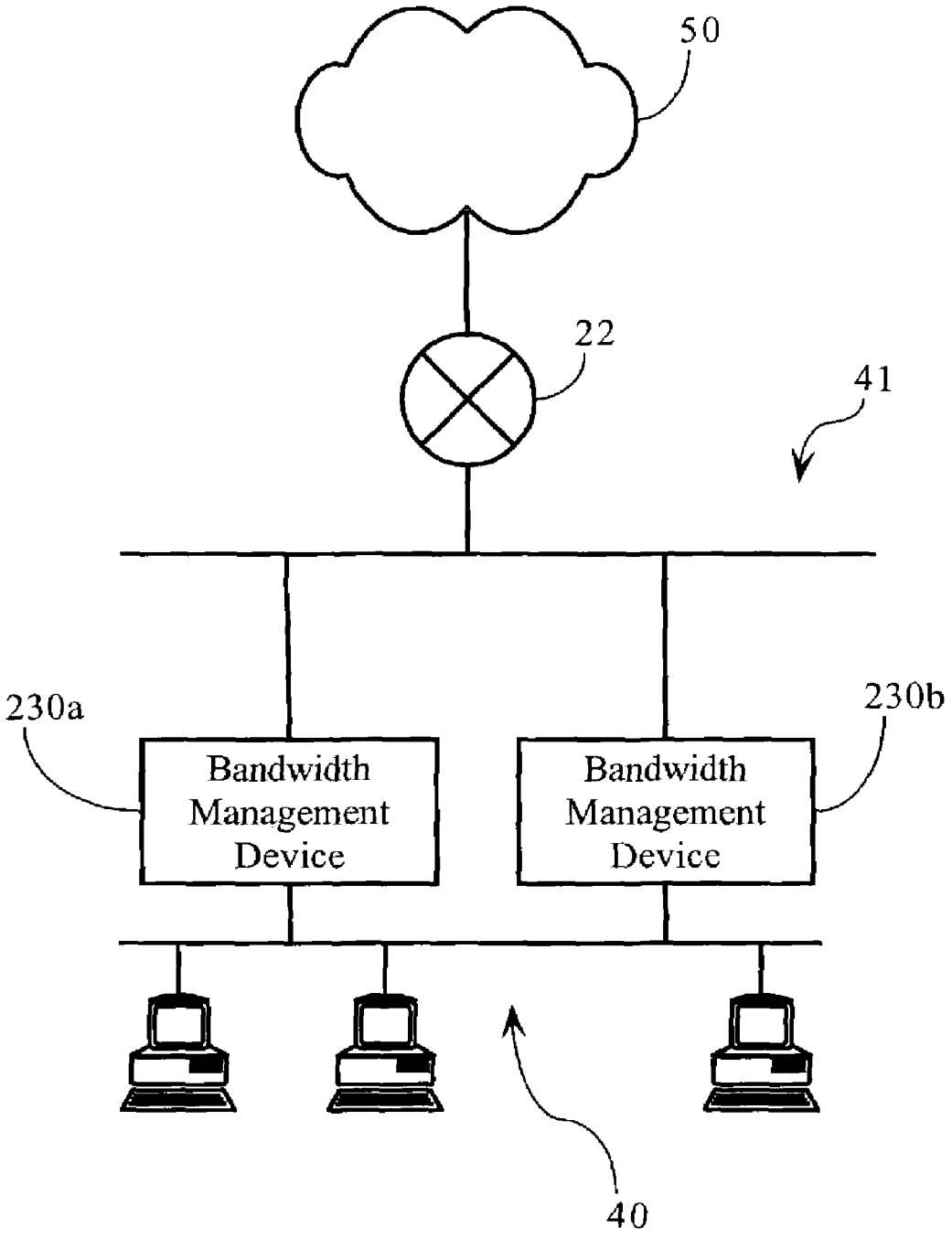

Fig._1B
(Prior Art)

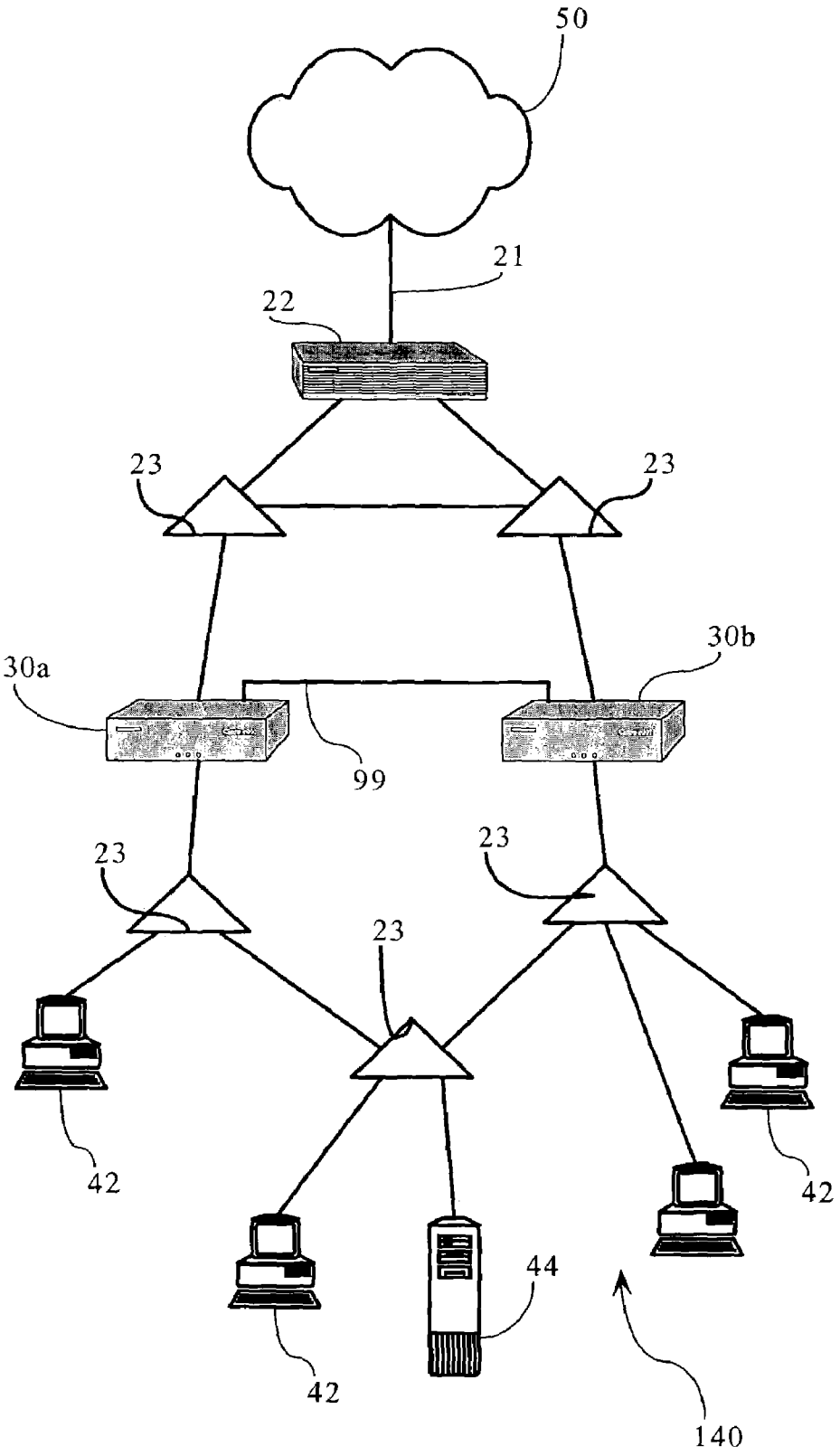

Fig._2A

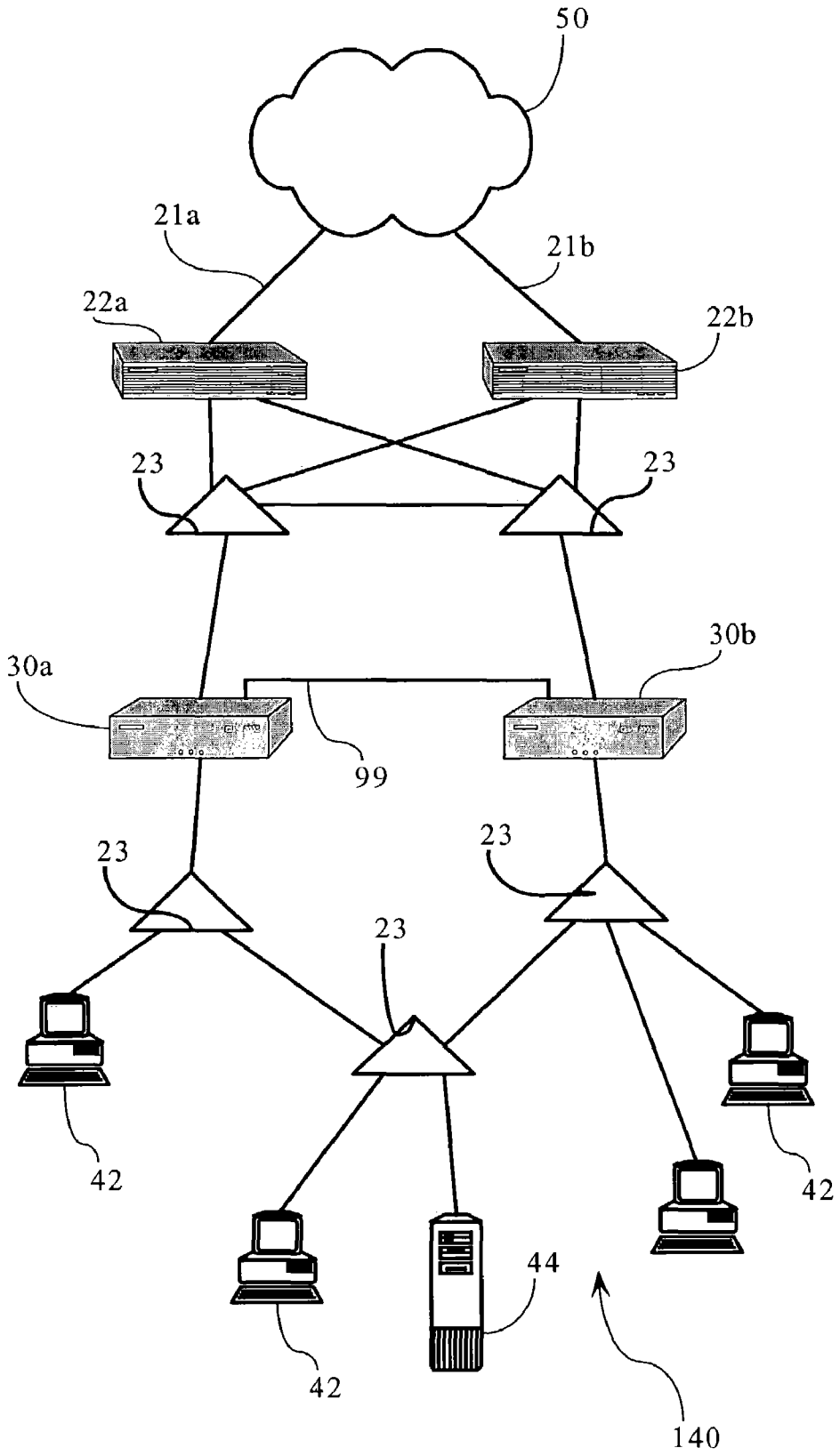

Fig. 2B

DOCKET ALARM

Explore Litigation Insights

Docket Alarm provides insights to develop a more informed litigation strategy and the peace of mind of knowing you're on top of things.

Real-Time Litigation Alerts

Keep your litigation team up-to-date with **real-time alerts** and advanced team management tools built for the enterprise, all while greatly reducing PACER spend.

Our comprehensive service means we can handle Federal, State, and Administrative courts across the country.

Advanced Docket Research

With over 230 million records, Docket Alarm's cloud-native docket research platform finds what other services can't. Coverage includes Federal, State, plus PTAB, TTAB, ITC and NLRB decisions, all in one place.

Identify arguments that have been successful in the past with full text, pinpoint searching. Link to case law cited within any court document via Fastcase.

Analytics At Your Fingertips

Learn what happened the last time a particular judge, opposing counsel or company faced cases similar to yours.

Advanced out-of-the-box PTAB and TTAB analytics are always at your fingertips.

API

Docket Alarm offers a powerful API (application programming interface) to developers that want to integrate case filings into their apps.

LAW FIRMS

Build custom dashboards for your attorneys and clients with live data direct from the court.

Automate many repetitive legal tasks like conflict checks, document management, and marketing.

FINANCIAL INSTITUTIONS

Litigation and bankruptcy checks for companies and debtors.

E-DISCOVERY AND LEGAL VENDORS

Sync your system to PACER to automate legal marketing.