AO 120 (Rev. 08/10)

TO:	REPORT ON THE FILING OR DETERMINATION OF AN ACTION REGARDING A PATENT OR TRADEMARK
Mail Stop 8 Director of the U.S. Patent and Trademark Office P.O. Box 1450 Alexandria, VA 22313-1450	

In Compliance with 35 U.S.C. § 290 and/or 15 U.S.C. § 1116 you are hereby advised that a court action has been filed in the U.S. District Court Western District of Texas, Waco Division on the following

☐ Trademarks or ☑ Patents. (☐ the patent action involves 35 U.S.C. § 292.):

DOCKET NO.	DATE FILED	U.S. DISTRICT COURT
6:20-cv-00663	7/22/2020	Western District of Texas, Waco Division

PLAINTIFF	DEFENDANT
Koss Corporation	Plantronics, Inc.

	PATENT OR TRADEMARK NO.	DATE OF PATENT OR TRADEMARK	HOLDER OF PATENT OR TRADEMARK
1	10,206,025	2/12/2019	Koss Corporation
2	10,368,155	7/30/2019	Koss Corporation
3	10,469,934	11/5/2019	Koss Corporation
4	10,506,325	12/10/2019	Koss Corporation
5			

In the above—entitled case, the following patent(s)/ trademark(s) have been included:

DATE INCLUDED	INCLUDED BY ☐ Amendment ☐ Answer ☐ Cross Bill ☐ Other Pleading	
PATENT OR TRADEMARK NO.	DATE OF PATENT OR TRADEMARK	HOLDER OF PATENT OR TRADEMARK
1		
2		
3		
4		
5		

In the above—entitled case, the following decision has been rendered or judgement issued:

DECISION/JUDGEMENT

CLERK	(BY) DEPUTY CLERK	DATE

Copy 1—Upon initiation of action, mail this copy to Director **Copy 3—Upon termination of action, mail this copy to Director**
Copy 2—Upon filing document adding patent(s), mail this copy to Director **Copy 4—Case file copy**

Print Save As... Reset

APPLE 1002

AO 120 (Rev. 08/10)

TO:	Mail Stop 8 Director of the U.S. Patent and Trademark Office P.O. Box 1450 Alexandria, VA 22313-1450	REPORT ON THE FILING OR DETERMINATION OF AN ACTION REGARDING A PATENT OR TRADEMARK

In Compliance with 35 U.S.C. § 290 and/or 15 U.S.C. § 1116 you are hereby advised that a court action has been filed in the U.S. District Court Western District of Texas, Waco Division on the following

☐ Trademarks or ☑ Patents. (☐ the patent action involves 35 U.S.C. § 292.):

DOCKET NO.	DATE FILED	U.S. DISTRICT COURT
6:20-cv-00664	7/22/2020	Western District of Texas, Waco Division

PLAINTIFF	DEFENDANT
Koss Corporation	Skullcandy, Inc.

	PATENT OR TRADEMARK NO.	DATE OF PATENT OR TRADEMARK	HOLDER OF PATENT OR TRADEMARK
1	10,206,025	2/12/2019	Koss Corporation
2	10,368,155	7/30/2019	Koss Corporation
3	10,469,934	11/5/2019	Koss Corporation
4	10,491,982	11/26/2019	Koss Corporation
5	10,506,325	12/10/2019	Koss Corporation

In the above—entitled case, the following patent(s)/ trademark(s) have been included:

DATE INCLUDED	INCLUDED BY ☐ Amendment ☐ Answer ☐ Cross Bill ☐ Other Pleading	
PATENT OR TRADEMARK NO.	DATE OF PATENT OR TRADEMARK	HOLDER OF PATENT OR TRADEMARK
1		
2		
3		
4		
5		

In the above—entitled case, the following decision has been rendered or judgement issued:

DECISION/JUDGEMENT

CLERK	(BY) DEPUTY CLERK	DATE

Copy 1—Upon initiation of action, mail this copy to Director **Copy 3—Upon termination of action, mail this copy to Director**
Copy 2—Upon filing document adding patent(s), mail this copy to Director **Copy 4—Case file copy**

Print Save As... Reset

AO 120 (Rev. 08/10)

TO:	Mail Stop 8 Director of the U.S. Patent and Trademark Office P.O. Box 1450 Alexandria, VA 22313-1450	REPORT ON THE FILING OR DETERMINATION OF AN ACTION REGARDING A PATENT OR TRADEMARK

In Compliance with 35 U.S.C. § 290 and/or 15 U.S.C. § 1116 you are hereby advised that a court action has been filed in the U.S. District Court Western District of Texas, Waco Division on the following

☐ Trademarks or ☑ Patents. (☐ the patent action involves 35 U.S.C. § 292.):

DOCKET NO.	DATE FILED	U.S. DISTRICT COURT
6:20-cv-00661	7/22/2020	Western District of Texas, Waco Division

PLAINTIFF	DEFENDANT
Koss Corporation	Bose Corporation

	PATENT OR TRADEMARK NO.	DATE OF PATENT OR TRADEMARK	HOLDER OF PATENT OR TRADEMARK
1	10,206,025	2/12/2019	Koss Corporation
2	10,368,155	7/30/2019	Koss Corporation
3	10,469,934	11/5/2019	Koss Corporation
4			
5			

In the above—entitled case, the following patent(s)/ trademark(s) have been included:

DATE INCLUDED	INCLUDED BY ☐ Amendment ☐ Answer ☐ Cross Bill ☐ Other Pleading		
	PATENT OR TRADEMARK NO.	DATE OF PATENT OR TRADEMARK	HOLDER OF PATENT OR TRADEMARK
1			
2			
3			
4			
5			

In the above—entitled case, the following decision has been rendered or judgement issued:

DECISION/JUDGEMENT

CLERK	(BY) DEPUTY CLERK	DATE

Copy 1—Upon initiation of action, mail this copy to Director **Copy 3—Upon termination of action, mail this copy to Director**
Copy 2—Upon filing document adding patent(s), mail this copy to Director **Copy 4—Case file copy**

Print Save As... Reset

AO 120 (Rev. 08/10)

TO:	**Mail Stop 8** **Director of the U.S. Patent and Trademark Office** **P.O. Box 1450** **Alexandria, VA 22313-1450**	**REPORT ON THE FILING OR DETERMINATION OF AN ACTION REGARDING A PATENT OR TRADEMARK**

In Compliance with 35 U.S.C. § 290 and/or 15 U.S.C. § 1116 you are hereby advised that a court action has been filed in the U.S. District Court Western District of Texas, Waco Division on the following

☐ Trademarks or ☑ Patents. (☐ the patent action involves 35 U.S.C. § 292.):

DOCKET NO.	DATE FILED	U.S. DISTRICT COURT
6:20-cv-00665	7/23/2020	Western District of Texas, Waco Division

PLAINTIFF	DEFENDANT
Koss Corporation	Apple, Inc.

	PATENT OR TRADEMARK NO.	DATE OF PATENT OR TRADEMARK	HOLDER OF PATENT OR TRADEMARK
1	10,206,025	2/12/2019	Koss Corporation
2	10,298,451	5/21/2019	Koss Corporation
3	10,469,934	11/5/2019	Koss Corporation
4	10,491,982	11/26/2019	Koss Corporation
5	10,506,325	12/10/2019	Koss Corporation

In the above—entitled case, the following patent(s)/ trademark(s) have been included:

DATE INCLUDED	INCLUDED BY ☐ Amendment ☐ Answer ☐ Cross Bill ☐ Other Pleading	
PATENT OR TRADEMARK NO.	DATE OF PATENT OR TRADEMARK	HOLDER OF PATENT OR TRADEMARK
1		
2		
3		
4		
5		

In the above—entitled case, the following decision has been rendered or judgement issued:

DECISION/JUDGEMENT

CLERK	(BY) DEPUTY CLERK	DATE

Copy 1—Upon initiation of action, mail this copy to Director **Copy 3—Upon termination of action, mail this copy to Director**
Copy 2—Upon filing document adding patent(s), mail this copy to Director **Copy 4—Case file copy**

Print Save As... Reset

UNITED STATES PATENT AND TRADEMARK OFFICE

UNITED STATES DEPARTMENT OF COMMERCE
United States Patent and Trademark Office
Address: COMMISSIONER FOR PATENTS
P.O. Box 1450
Alexandria, Virginia 22313-1450
www.uspto.gov

APPLICATION NO.	ISSUE DATE	PATENT NO.	ATTORNEY DOCKET NO.	CONFIRMATION NO.
16/375,879	11/05/2019	10469934	080188PCTUSCON10	1056

26285 7590 10/16/2019

K&L GATES LLP-Pittsburgh
210 SIXTH AVENUE
PITTSBURGH, PA 15222-2613

ISSUE NOTIFICATION

The projected patent number and issue date are specified above.

Determination of Patent Term Adjustment under 35 U.S.C. 154 (b)
(application filed on or after May 29, 2000)

The Patent Term Adjustment is 0 day(s). Any patent to issue from the above-identified application will include an indication of the adjustment on the front page.

If a Continued Prosecution Application (CPA) was filed in the above-identified application, the filing date that determines Patent Term Adjustment is the filing date of the most recent CPA.

Applicant will be able to obtain more detailed information by accessing the Patent Application Information Retrieval (PAIR) WEB site (http://pair.uspto.gov).

Any questions regarding the Patent Term Extension or Adjustment determination should be directed to the Office of Patent Legal Administration at (571)-272-7702. Questions relating to issue and publication fee payments should be directed to the Application Assistance Unit (AAU) of the Office of Data Management (ODM) at (571)-272-4200.

APPLICANT(s) (Please see PAIR WEB site http://pair.uspto.gov for additional applicants):

Michael J. Koss, Milwaukee, WI;
Koss Corporation, Milmaukee, WI;
Michael J. Pelland, Princeton, WI;
Michael Sagan, Fairfield, CA;
Steven R. Reckamp, Crystal Lake, IL;
Gregory J. Hallingstad, Deforest, WI;
Jeffery K. Bovee, Sterling, IL;
Morgan J. Lowery, Deforest, WI;

The United States represents the largest, most dynamic marketplace in the world and is an unparalleled location for business investment, innovation, and commercialization of new technologies. The USA offers tremendous resources and advantages for those who invest and manufacture goods here. Through SelectUSA, our nation works to encourage and facilitate business investment. To learn more about why the USA is the best country in the world to develop technology, manufacture products, and grow your business, visit SelectUSA.gov.

Application Number	Application/Control No.	Applicant(s)/Patent under Reexamination	
* 16/375,879 *	16/375,879	Koss et al.	
	Examiner	**Art Unit**	
	DOAN, KIET M	2641	

Document Code - DISQ	**Internal Document - DO NOT MAIL**

TERMINAL DISCLAIMER	☑ APPROVED	☐ DISAPPROVED
Date Filed: 08 April 2019	**This patent is subject to a Terminal Disclaimer**	

Approved/Disapproved by:
/JEAN PROCTOR/
Technology Center: OPLC
Telephone: (571)272-1040

UNITED STATES PATENT AND TRADEMARK OFFICE

UNITED STATES DEPARTMENT OF COMMERCE
United States Patent and Trademark Office
Address: COMMISSIONER FOR PATENTS
P.O. Box 1450
Alexandria, Virginia 22313-1450
www.uspto.gov

APPLICATION NO.	FILING DATE	FIRST NAMED INVENTOR	ATTORNEY DOCKET NO.	CONFIRMATION NO.
16/375,879	04/05/2019	Michael J. Koss	080188PCTUSCON10	1056

26285 7590 09/17/2019

K&L GATES LLP-Pittsburgh
210 SIXTH AVENUE
PITTSBURGH, PA 15222-2613

EXAMINER	
DOAN, KIET M	

ART UNIT	PAPER NUMBER
2641	

NOTIFICATION DATE	DELIVERY MODE
09/17/2019	ELECTRONIC

Please find below and/or attached an Office communication concerning this application or proceeding.

The time period for reply, if any, is set in the attached communication.

Notice of the Office communication was sent electronically on above-indicated "Notification Date" to the following e-mail address(es):

USpatentmail@klgates.com

UNITED STATES PATENT AND TRADEMARK OFFICE

Commissioner for Patents
United States Patent and Trademark Office
P.O. Box 1450
Alexandria, VA 22313-1450
www.uspto.gov

In re Application of	:	
Koss et al.	:	
Application No. 16/375,879	:	DECISION ON PETITION
Filed: 5 Apr 2019	:	
For: SYSTEM WITH WIRELESS	:	
EARPHONES	:	

This is a decision on the petition under 37 CFR 1.102(c)(1), filed August 5, 2019, to make the above-identified application special based on applicant's age as set forth in MPEP §708.02, Section II.

The petition is **GRANTED**.

A grantable petition to make an application special under 37 CFR 1.102(c)(1) and MPEP §708.02, Section II: Applicant's Age must be accompanied by evidence showing that the applicant is 65 years of age, or more, such as applicant's statement or a statement from a registered practitioner that he or she has evidence that the applicant is 65 year of age or older. No fee is required.

The instant petition includes a statement from an attorney or registered practitioner declaring that he/she is in possession of evidence, and will retain such in the application file record, showing that Michael J. Koss is listed is 65 years of age, or more. Accordingly, the above-identified application has been accorded "special" status.

Telephone inquiries concerning this decision should be directed to Cheryl Gibson-Baylor at (571) 272-3213.

All other inquiries concerning either the examination or status of the application should be directed to the Technology Center.

The application is being forwarded to the Technology Center Art Unit 2641 for action on the merits commensurate with this decision.

/Cheryl Gibson-Baylor/
Cheryl Gibson-Baylor
Petitions Paralegal Specialist
Office of Petitions

PART B - FEE(S) TRANSMITTAL

Complete and send this form, together with applicable fee(s), by mail or fax, or via EFS-Web.

By mail, send to: Mail Stop ISSUE FEE
Commissioner for Patents
P.O. Box 1450
Alexandria, Virginia 22313-1450

By fax, send to: (571)-273-2885

INSTRUCTIONS: This form should be used for transmitting the ISSUE FEE and PUBLICATION FEE (if required). Blocks 1 through 5 should be completed where appropriate. All further correspondence including the Patent, advance orders and notification of maintenance fees will be mailed to the current correspondence address as indicated unless corrected below or directed otherwise in Block 1, by (a) specifying a new correspondence address; and/or (b) indicating a separate "FEE ADDRESS" for maintenance fee notifications.

CURRENT CORRESPONDENCE ADDRESS (Note: Use Block 1 for any change of address)

26285 7590 09/05/2019
K&L GATES LLP-Pittsburgh
210 SIXTH AVENUE
PITTSBURGH, PA 15222-2613

Note: A certificate of mailing can only be used for domestic mailings of the Fee(s) Transmittal. This certificate cannot be used for any other accompanying papers. Each additional paper, such as an assignment or formal drawing, must have its own certificate of mailing or transmission.

Certificate of Mailing or Transmission

I hereby certify that this Fee(s) Transmittal is being deposited with the United States Postal Service with sufficient postage for first class mail in an envelope addressed to the Mail Stop ISSUE FEE address above, or being transmitted to the USPTO via EFS-Web or by facsimile to (571) 273-2885, on the date below.

(Typed or printed name)

(Signature)

(Date)

APPLICATION NO.	FILING DATE	FIRST NAMED INVENTOR	ATTORNEY DOCKET NO.	CONFIRMATION NO.
16/375,879	04/05/2019	Michael J. Koss	080188PCTUSCON10	1056

TITLE OF INVENTION: SYSTEM WITH WIRELESS EARPHONES

APPLN. TYPE	ENTITY STATUS	ISSUE FEE DUE	PUBLICATION FEE DUE	PREV. PAID ISSUE FEE	TOTAL FEE(S) DUE	DATE DUE
nonprovisional	SMALL	$500	$0.00	$0.00	$500	12/05/2019

EXAMINER	ART UNIT	CLASS-SUBCLASS
DOAN, KIET M	2641	455-428000

1. Change of correspondence address or indication of "Fee Address" (37 CFR 1.363).

☐ Change of correspondence address (or Change of Correspondence Address form PTO/SB/122) attached.

☐ "Fee Address" indication (or "Fee Address" Indication form PTO/SB/47; Rev 03-09 or more recent) attached. **Use of a Customer Number is required.**

2. For printing on the patent front page, list
(1) The names of up to 3 registered patent attorneys or agents OR, alternatively,
(2) The name of a single firm (having as a member a registered attorney or agent) and the names of up to 2 registered patent attorneys or agents. If no name is listed, no name will be printed.

1 K&L Gates LLP
2
3

3. ASSIGNEE NAME AND RESIDENCE DATA TO BE PRINTED ON THE PATENT (print or type)

PLEASE NOTE: Unless an assignee is identified below, no assignee data will appear on the patent. If an assignee is identified below, the document must have been previously recorded, or filed for recordation, as set forth in 37 CFR 3.11 and 37 CFR 3.81(a). Completion of this form is NOT a substitute for filing an assignment.

(A) NAME OF ASSIGNEE: KOSS CORPORATION

(B) RESIDENCE: (CITY and STATE OR COUNTRY): MILWAUKEE, WISCONSIN

Please check the appropriate assignee category or categories (will not be printed on the patent) : ☐ Individual ☒ Corporation or other private group entity ☐ Government

4a. Fees submitted: ☒ Issue Fee ☐ Publication Fee (if required) ☐ Advance Order - # of Copies _____

4b. Method of Payment: *(Please first reapply any previously paid fee shown above)*

☒ Electronic Payment via EFS-Web ☐ Enclosed check ☐ Non-electronic payment by credit card (Attach form PTO-2038)

☒ The Director is hereby authorized to charge the required fee(s), any deficiency, or credit any overpayment to Deposit Account No. 02-1818

5. **Change in Entity Status** (from status indicated above)

☐ Applicant certifying micro entity status. See 37 CFR 1.29

☐ Applicant asserting small entity status. See 37 CFR 1.27

☐ Applicant changing to regular undiscounted fee status.

NOTE: Absent a valid certification of Micro Entity Status (see forms PTO/SB/15A and 15B), issue fee payment in the micro entity amount will not be accepted at the risk of application abandonment.
NOTE: If the application was previously under micro entity status, checking this box will be taken to be a notification of loss of entitlement to micro entity status.
NOTE: Checking this box will be taken to be a notification of loss of entitlement to small or micro entity status, as applicable.

NOTE: This form must be signed in accordance with 37 CFR 1.31 and 1.33. See 37 CFR 1.4 for signature requirements and certifications.

Authorized Signature /Mark G. Knedeisen/ Date September 16, 2019

Typed or printed name Mark G. Knedeisen Registration No. 42,747

Electronic Patent Application Fee Transmittal

Application Number:	16375879
Filing Date:	05-Apr-2019
Title of Invention:	SYSTEM WITH WIRELESS EARPHONES
First Named Inventor/Applicant Name:	Michael J. Koss
Filer:	Mark G. Knedeisen/Amanda Kernan
Attorney Docket Number:	080188PCTUSCON10

Filed as Small Entity

Filing Fees for Utility under 35 USC 111(a)

Description	Fee Code	Quantity	Amount	Sub-Total in USD($)
Basic Filing:				
Pages:				
Claims:				
Miscellaneous-Filing:				
Petition:				
Patent-Appeals-and-Interference:				
Post-Allowance-and-Post-Issuance:				
UTILITY APPL ISSUE FEE	2501	1	500	500

Description	Fee Code	Quantity	Amount	Sub-Total in USD($)
Extension-of-Time:				
Miscellaneous:				
			Total in USD ($)	**500**

Electronic Acknowledgement Receipt	
EFS ID:	37171144
Application Number:	16375879
International Application Number:	
Confirmation Number:	1056
Title of Invention:	SYSTEM WITH WIRELESS EARPHONES
First Named Inventor/Applicant Name:	Michael J. Koss
Customer Number:	26285
Filer:	Mark G. Knedeisen/Amanda Kernan
Filer Authorized By:	Mark G. Knedeisen
Attorney Docket Number:	080188PCTUSCON10
Receipt Date:	16-SEP-2019
Filing Date:	05-APR-2019
Time Stamp:	13:25:07
Application Type:	Utility under 35 USC 111(a)

Payment information:

Submitted with Payment	yes
Payment Type	DA
Payment was successfully received in RAM	$500
RAM confirmation Number	E20199FD25259756
Deposit Account	021818
Authorized User	Amanda Kernan
The Director of the USPTO is hereby authorized to charge indicated fees and credit any overpayment as follows: 37 CFR 1.16 (National application filing, search, and examination fees) 37 CFR 1.17 (Patent application and reexamination processing fees)	

37 CFR 1.19 (Document supply fees)

37 CFR 1.20 (Post Issuance fees)

37 CFR 1.21 (Miscellaneous fees and charges)

File Listing:

Document Number	Document Description	File Name	File Size(Bytes)/ Message Digest	Multi Part /.zip	Pages (if appl.)
1	Issue Fee Payment (PTO-85B)	9-16-2019-Issue-fee-transmittal.pdf	1604061 0011856a66734bfdd58acf90a03b0a0d0aef6ed5	no	1
Warnings:					
Information:					
2	Fee Worksheet (SB06)	fee-info.pdf	30270 724afd450ff42b5088ca5a9340960e3dadc3101e	no	2
Warnings:					
Information:					
		Total Files Size (in bytes):	1634331		

This Acknowledgement Receipt evidences receipt on the noted date by the USPTO of the indicated documents, characterized by the applicant, and including page counts, where applicable. It serves as evidence of receipt similar to a Post Card, as described in MPEP 503.

New Applications Under 35 U.S.C. 111

If a new application is being filed and the application includes the necessary components for a filing date (see 37 CFR 1.53(b)-(d) and MPEP 506), a Filing Receipt (37 CFR 1.54) will be issued in due course and the date shown on this Acknowledgement Receipt will establish the filing date of the application.

National Stage of an International Application under 35 U.S.C. 371

If a timely submission to enter the national stage of an international application is compliant with the conditions of 35 U.S.C. 371 and other applicable requirements a Form PCT/DO/EO/903 indicating acceptance of the application as a national stage submission under 35 U.S.C. 371 will be issued in addition to the Filing Receipt, in due course.

New International Application Filed with the USPTO as a Receiving Office

If a new international application is being filed and the international application includes the necessary components for an international filing date (see PCT Article 11 and MPEP 1810), a Notification of the International Application Number and of the International Filing Date (Form PCT/RO/105) will be issued in due course, subject to prescriptions concerning national security, and the date shown on this Acknowledgement Receipt will establish the international filing date of the application.

UNITED STATES PATENT AND TRADEMARK OFFICE

UNITED STATES DEPARTMENT OF COMMERCE
United States Patent and Trademark Office
Address: COMMISSIONER FOR PATENTS
P.O. Box 1450
Alexandria, Virginia 22313-1450
www.uspto.gov

NOTICE OF ALLOWANCE AND FEE(S) DUE

26285 7590 09/05/2019
K&L GATES LLP-Pittsburgh
210 SIXTH AVENUE
PITTSBURGH, PA 15222-2613

EXAMINER
DOAN, KIET M

ART UNIT	PAPER NUMBER
2641	

DATE MAILED: 09/05/2019

APPLICATION NO.	FILING DATE	FIRST NAMED INVENTOR	ATTORNEY DOCKET NO.	CONFIRMATION NO.
16/375,879	04/05/2019	Michael J. Koss	080188PCTUSCON10	1056

TITLE OF INVENTION: SYSTEM WITH WIRELESS EARPHONES

APPLN. TYPE	ENTITY STATUS	ISSUE FEE DUE	PUBLICATION FEE DUE	PREV. PAID ISSUE FEE	TOTAL FEE(S) DUE	DATE DUE
nonprovisional	SMALL	$500	$0.00	$0.00	$500	12/05/2019

THE APPLICATION IDENTIFIED ABOVE HAS BEEN EXAMINED AND IS ALLOWED FOR ISSUANCE AS A PATENT. PROSECUTION ON THE MERITS IS CLOSED. THIS NOTICE OF ALLOWANCE IS NOT A GRANT OF PATENT RIGHTS. THIS APPLICATION IS SUBJECT TO WITHDRAWAL FROM ISSUE AT THE INITIATIVE OF THE OFFICE OR UPON PETITION BY THE APPLICANT. SEE 37 CFR 1.313 AND MPEP 1308.

THE ISSUE FEE AND PUBLICATION FEE (IF REQUIRED) MUST BE PAID WITHIN THREE MONTHS FROM THE MAILING DATE OF THIS NOTICE OR THIS APPLICATION SHALL BE REGARDED AS ABANDONED. THIS STATUTORY PERIOD CANNOT BE EXTENDED. SEE 35 U.S.C. 151. THE ISSUE FEE DUE INDICATED ABOVE DOES NOT REFLECT A CREDIT FOR ANY PREVIOUSLY PAID ISSUE FEE IN THIS APPLICATION. IF AN ISSUE FEE HAS PREVIOUSLY BEEN PAID IN THIS APPLICATION (AS SHOWN ABOVE), THE RETURN OF PART B OF THIS FORM WILL BE CONSIDERED A REQUEST TO REAPPLY THE PREVIOUSLY PAID ISSUE FEE TOWARD THE ISSUE FEE NOW DUE.

HOW TO REPLY TO THIS NOTICE:

I. Review the ENTITY STATUS shown above. If the ENTITY STATUS is shown as SMALL or MICRO, verify whether entitlement to that entity status still applies.

If the ENTITY STATUS is the same as shown above, pay the TOTAL FEE(S) DUE shown above.

If the ENTITY STATUS is changed from that shown above, on PART B - FEE(S) TRANSMITTAL, complete section number 5 titled "Change in Entity Status (from status indicated above)".

For purposes of this notice, small entity fees are 1/2 the amount of undiscounted fees, and micro entity fees are 1/2 the amount of small entity fees.

II. PART B - FEE(S) TRANSMITTAL, or its equivalent, must be completed and returned to the United States Patent and Trademark Office (USPTO) with your ISSUE FEE and PUBLICATION FEE (if required). If you are charging the fee(s) to your deposit account, section "4b" of Part B - Fee(s) Transmittal should be completed and an extra copy of the form should be submitted. If an equivalent of Part B is filed, a request to reapply a previously paid issue fee must be clearly made, and delays in processing may occur due to the difficulty in recognizing the paper as an equivalent of Part B.

III. All communications regarding this application must give the application number. Please direct all communications prior to issuance to Mail Stop ISSUE FEE unless advised to the contrary.

IMPORTANT REMINDER: Maintenance fees are due in utility patents issuing on applications filed on or after Dec. 12, 1980. It is patentee's responsibility to ensure timely payment of maintenance fees when due. More information is available at www.uspto.gov/PatentMaintenanceFees.

PART B - FEE(S) TRANSMITTAL

Complete and send this form, together with applicable fee(s), by mail or fax, or via EFS-Web.

By mail, send to: Mail Stop ISSUE FEE
Commissioner for Patents
P.O. Box 1450
Alexandria, Virginia 22313-1450

By fax, send to: (571)-273-2885

INSTRUCTIONS: This form should be used for transmitting the ISSUE FEE and PUBLICATION FEE (if required). Blocks 1 through 5 should be completed where appropriate. All further correspondence including the Patent, advance orders and notification of maintenance fees will be mailed to the current correspondence address as indicated unless corrected below or directed otherwise in Block 1, by (a) specifying a new correspondence address; and/or (b) indicating a separate "FEE ADDRESS" for maintenance fee notifications.

CURRENT CORRESPONDENCE ADDRESS (Note: Use Block 1 for any change of address)

26285 7590 09/05/2019
K&L GATES LLP-Pittsburgh
210 SIXTH AVENUE
PITTSBURGH, PA 15222-2613

Note: A certificate of mailing can only be used for domestic mailings of the Fee(s) Transmittal. This certificate cannot be used for any other accompanying papers. Each additional paper, such as an assignment or formal drawing, must have its own certificate of mailing or transmission.

Certificate of Mailing or Transmission

I hereby certify that this Fee(s) Transmittal is being deposited with the United States Postal Service with sufficient postage for first class mail in an envelope addressed to the Mail Stop ISSUE FEE address above, or being transmitted to the USPTO via EFS-Web or by facsimile to (571) 273-2885, on the date below.

(Typed or printed name)
(Signature)
(Date)

APPLICATION NO.	FILING DATE	FIRST NAMED INVENTOR	ATTORNEY DOCKET NO.	CONFIRMATION NO.
16/375,879	04/05/2019	Michael J. Koss	080188PCTUSCON10	1056

TITLE OF INVENTION: SYSTEM WITH WIRELESS EARPHONES

APPLN. TYPE	ENTITY STATUS	ISSUE FEE DUE	PUBLICATION FEE DUE	PREV. PAID ISSUE FEE	TOTAL FEE(S) DUE	DATE DUE
nonprovisional	SMALL	$500	$0.00	$0.00	$500	12/05/2019

EXAMINER	ART UNIT	CLASS-SUBCLASS
DOAN, KIET M	2641	455-428000

1. Change of correspondence address or indication of "Fee Address" (37 CFR 1.363).

❑ Change of correspondence address (or Change of Correspondence Address form PTO/SB/122) attached.

❑ "Fee Address" indication (or "Fee Address" Indication form PTO/SB/47; Rev 03-09 or more recent) attached. **Use of a Customer Number is required.**

2. For printing on the patent front page, list
(1) The names of up to 3 registered patent attorneys or agents OR, alternatively,
(2) The name of a single firm (having as a member a registered attorney or agent) and the names of up to 2 registered patent attorneys or agents. If no name is listed, no name will be printed.

1 _____
2 _____
3 _____

3. ASSIGNEE NAME AND RESIDENCE DATA TO BE PRINTED ON THE PATENT (print or type)

PLEASE NOTE: Unless an assignee is identified below, no assignee data will appear on the patent. If an assignee is identified below, the document must have been previously recorded, or filed for recordation, as set forth in 37 CFR 3.11 and 37 CFR 3.81(a). Completion of this form is NOT a substitute for filing an assignment.

(A) NAME OF ASSIGNEE (B) RESIDENCE: (CITY and STATE OR COUNTRY)

Please check the appropriate assignee category or categories (will not be printed on the patent) : ❑ Individual ❑ Corporation or other private group entity ❑ Government

4a. Fees submitted: ❑Issue Fee ❑Publication Fee (if required) ❑Advance Order - # of Copies _____

4b. Method of Payment: *(Please first reapply any previously paid fee shown above)*

❑ Electronic Payment via EFS-Web ❑ Enclosed check ❑ Non-electronic payment by credit card (Attach form PTO-2038)

❑ The Director is hereby authorized to charge the required fee(s), any deficiency, or credit any overpayment to Deposit Account No. _____

5. **Change in Entity Status** (from status indicated above)

❑ Applicant certifying micro entity status. See 37 CFR 1.29

❑ Applicant asserting small entity status. See 37 CFR 1.27

❑ Applicant changing to regular undiscounted fee status.

NOTE: Absent a valid certification of Micro Entity Status (see forms PTO/SB/15A and 15B), issue fee payment in the micro entity amount will not be accepted at the risk of application abandonment.
NOTE: If the application was previously under micro entity status, checking this box will be taken to be a notification of loss of entitlement to micro entity status.
NOTE: Checking this box will be taken to be a notification of loss of entitlement to small or micro entity status, as applicable.

NOTE: This form must be signed in accordance with 37 CFR 1.31 and 1.33. See 37 CFR 1.4 for signature requirements and certifications.

Authorized Signature _____ Date _____

Typed or printed name _____ Registration No. _____

UNITED STATES PATENT AND TRADEMARK OFFICE

UNITED STATES DEPARTMENT OF COMMERCE
United States Patent and Trademark Office
Address: COMMISSIONER FOR PATENTS
P.O. Box 1450
Alexandria, Virginia 22313-1450
www.uspto.gov

APPLICATION NO.	FILING DATE	FIRST NAMED INVENTOR	ATTORNEY DOCKET NO.	CONFIRMATION NO.
16/375,879	04/05/2019	Michael J. Koss	080188PCTUSCON10	1056

26285 7590 09/05/2019

K&L GATES LLP-Pittsburgh
210 SIXTH AVENUE
PITTSBURGH, PA 15222-2613

EXAMINER	
DOAN, KIET M	
ART UNIT	PAPER NUMBER
2641	

DATE MAILED: 09/05/2019

Determination of Patent Term Adjustment under 35 U.S.C. 154 (b)
(Applications filed on or after May 29, 2000)

The Office has discontinued providing a Patent Term Adjustment (PTA) calculation with the Notice of Allowance.

Section 1(h)(2) of the AIA Technical Corrections Act amended 35 U.S.C. 154(b)(3)(B)(i) to eliminate the requirement that the Office provide a patent term adjustment determination with the notice of allowance. See Revisions to Patent Term Adjustment, 78 Fed. Reg. 19416, 19417 (Apr. 1, 2013). Therefore, the Office is no longer providing an initial patent term adjustment determination with the notice of allowance. The Office will continue to provide a patent term adjustment determination with the Issue Notification Letter that is mailed to applicant approximately three weeks prior to the issue date of the patent, and will include the patent term adjustment on the patent. Any request for reconsideration of the patent term adjustment determination (or reinstatement of patent term adjustment) should follow the process outlined in 37 CFR 1.705.

Any questions regarding the Patent Term Extension or Adjustment determination should be directed to the Office of Patent Legal Administration at (571)-272-7702. Questions relating to issue and publication fee payments should be directed to the Customer Service Center of the Office of Patent Publication at 1-(888)-786-0101 or (571)-272-4200.

OMB Clearance and PRA Burden Statement for PTOL-85 Part B

The Paperwork Reduction Act (PRA) of 1995 requires Federal agencies to obtain Office of Management and Budget approval before requesting most types of information from the public. When OMB approves an agency request to collect information from the public, OMB (i) provides a valid OMB Control Number and expiration date for the agency to display on the instrument that will be used to collect the information and (ii) requires the agency to inform the public about the OMB Control Number's legal significance in accordance with 5 CFR 1320.5(b).

The information collected by PTOL-85 Part B is required by 37 CFR 1.311. The information is required to obtain or retain a benefit by the public which is to file (and by the USPTO to process) an application. Confidentiality is governed by 35 U.S.C. 122 and 37 CFR 1.14. This collection is estimated to take 30 minutes to complete, including gathering, preparing, and submitting the completed application form to the USPTO. Time will vary depending upon the individual case. Any comments on the amount of time you require to complete this form and/or suggestions for reducing this burden, should be sent to the Chief Information Officer, U.S. Patent and Trademark Office, U.S. Department of Commerce, P.O. Box 1450, Alexandria, Virginia 22313-1450. DO NOT SEND FEES OR COMPLETED FORMS TO THIS ADDRESS. SEND TO: Commissioner for Patents, P.O. Box 1450, Alexandria, Virginia 22313-1450. Under the Paperwork Reduction Act of 1995, no persons are required to respond to a collection of information unless it displays a valid OMB control number.

Privacy Act Statement

The Privacy Act of 1974 (P.L. 93-579) requires that you be given certain information in connection with your submission of the attached form related to a patent application or patent. Accordingly, pursuant to the requirements of the Act, please be advised that: (1) the general authority for the collection of this information is 35 U.S.C. 2(b)(2); (2) furnishing of the information solicited is voluntary; and (3) the principal purpose for which the information is used by the U.S. Patent and Trademark Office is to process and/or examine your submission related to a patent application or patent. If you do not furnish the requested information, the U.S. Patent and Trademark Office may not be able to process and/or examine your submission, which may result in termination of proceedings or abandonment of the application or expiration of the patent.

The information provided by you in this form will be subject to the following routine uses:

1. The information on this form will be treated confidentially to the extent allowed under the Freedom of Information Act (5 U.S.C. 552) and the Privacy Act (5 U.S.C 552a). Records from this system of records may be disclosed to the Department of Justice to determine whether disclosure of these records is required by the Freedom of Information Act.
2. A record from this system of records may be disclosed, as a routine use, in the course of presenting evidence to a court, magistrate, or administrative tribunal, including disclosures to opposing counsel in the course of settlement negotiations.
3. A record in this system of records may be disclosed, as a routine use, to a Member of Congress submitting a request involving an individual, to whom the record pertains, when the individual has requested assistance from the Member with respect to the subject matter of the record.
4. A record in this system of records may be disclosed, as a routine use, to a contractor of the Agency having need for the information in order to perform a contract. Recipients of information shall be required to comply with the requirements of the Privacy Act of 1974, as amended, pursuant to 5 U.S.C. 552a(m).
5. A record related to an International Application filed under the Patent Cooperation Treaty in this system of records may be disclosed, as a routine use, to the International Bureau of the World Intellectual Property Organization, pursuant to the Patent Cooperation Treaty.
6. A record in this system of records may be disclosed, as a routine use, to another federal agency for purposes of National Security review (35 U.S.C. 181) and for review pursuant to the Atomic Energy Act (42 U.S.C. 218(c)).
7. A record from this system of records may be disclosed, as a routine use, to the Administrator, General Services, or his/her designee, during an inspection of records conducted by GSA as part of that agency's responsibility to recommend improvements in records management practices and programs, under authority of 44 U.S.C. 2904 and 2906. Such disclosure shall be made in accordance with the GSA regulations governing inspection of records for this purpose, and any other relevant (i.e., GSA or Commerce) directive. Such disclosure shall not be used to make determinations about individuals.
8. A record from this system of records may be disclosed, as a routine use, to the public after either publication of the application pursuant to 35 U.S.C. 122(b) or issuance of a patent pursuant to 35 U.S.C. 151. Further, a record may be disclosed, subject to the limitations of 37 CFR 1.14, as a routine use, to the public if the record was filed in an application which became abandoned or in which the proceedings were terminated and which application is referenced by either a published application, an application open to public inspection or an issued patent.
9. A record from this system of records may be disclosed, as a routine use, to a Federal, State, or local law enforcement agency, if the USPTO becomes aware of a violation or potential violation of law or regulation.

Notice of Allowability	Application No. 16/375,879	Applicant(s) Koss et al.	
	Examiner KIET M DOAN	Art Unit 2641	AIA (FITF) Status No

-- The MAILING DATE of this communication appears on the cover sheet with the correspondence address--

All claims being allowable, PROSECUTION ON THE MERITS IS (OR REMAINS) CLOSED in this application. If not included herewith (or previously mailed), a Notice of Allowance (PTOL-85) or other appropriate communication will be mailed in due course. **THIS NOTICE OF ALLOWABILITY IS NOT A GRANT OF PATENT RIGHTS.** This application is subject to withdrawal from issue at the initiative of the Office or upon petition by the applicant. See 37 CFR 1.313 and MPEP 1308.

1. ☑ This communication is responsive to 08/26/2019.
   ☐ A declaration(s)/affidavit(s) under **37 CFR 1.130(b)** was/were filed on _____.

2. ☐ An election was made by the applicant in response to a restriction requirement set forth during the interview on _____; the restriction requirement and election have been incorporated into this action.

3. ☑ The allowed claim(s) is/are See Continuation Sheet . As a result of the allowed claim(s), you may be eligible to benefit from the **Patent Prosecution Highway** program at a participating intellectual property office for the corresponding application. For more information, please see **http://www.uspto.gov/patents/init_events/pph/index.jsp** or send an inquiry to **PPHfeedback@uspto.gov.**

4. ☐ Acknowledgment is made of a claim for foreign priority under 35 U.S.C. § 119(a)-(d) or (f).

   Certified copies:

   a) ☐ All b) ☐ Some *c) ☐ None of the:

   1. ☐ Certified copies of the priority documents have been received.
   2. ☐ Certified copies of the priority documents have been received in Application No. _____ .
   3. ☐ Copies of the certified copies of the priority documents have been received in this national stage application from the International Bureau (PCT Rule 17.2(a)).

   * Certified copies not received: _____ .

Applicant has THREE MONTHS FROM THE "MAILING DATE" of this communication to file a reply complying with the requirements noted below. Failure to timely comply will result in ABANDONMENT of this application.
THIS THREE-MONTH PERIOD IS NOT EXTENDABLE.

5. ☐ CORRECTED DRAWINGS (as "replacement sheets") must be submitted.
   ☐ including changes required by the attached Examiner's Amendment / Comment or in the Office action of Paper No./Mail Date _____ .

   Identifying indicia such as the application number (see 37 CFR 1.84(c)) should be written on the drawings in the front (not the back) of each sheet. Replacement sheet(s) should be labeled as such in the header according to 37 CFR 1.121(d).

6. ☐ DEPOSIT OF and/or INFORMATION about the deposit of BIOLOGICAL MATERIAL must be submitted. Note the attached Examiner's comment regarding REQUIREMENT FOR THE DEPOSIT OF BIOLOGICAL MATERIAL.

Attachment(s)

1. ☐ Notice of References Cited (PTO-892)
2. ☑ Information Disclosure Statements (PTO/SB/08), Paper No./Mail Date _____.
3. ☐ Examiner's Comment Regarding Requirement for Deposit of Biological Material _____.
4. ☐ Interview Summary (PTO-413), Paper No./Mail Date. _____.
5. ☐ Examiner's Amendment/Comment
6. ☑ Examiner's Statement of Reasons for Allowance
7. ☐ Other _____.

/KIET M DOAN/
Primary Examiner, Art Unit 2641

Continuation of 3. The allowed claim(s) is/are: 2-17,19,21-38 and 40-66

DETAILED ACTION

Information Disclosure Statement

The information disclosure statement (IDS) submitted on 08/19/2019 and 08/21/2019. The submission is in compliance with the provisions of 37 CFR 1.97. Accordingly, the information disclosure statement is being considered by the examiner.

Allowable Subject Matter

The following is an examiner's statement of reasons for allowance:

Claims 2-17, 19, 21-38 and 40-66 are allowance, according to Applicant Remark filed on 08/26/2019 and Terminal Disclaimer filed and approved.

Any comments considered necessary by applicant must be submitted no later than the payment of the issue fee and, to avoid processing delays, should preferably accompany the issue fee. Such submissions should be clearly labeled "Comments on Statement of Reasons for Allowance."

Conclusion

Any inquiry concerning this communication or earlier communications from the examiner should be directed to KIET M DOAN whose telephone number is (571)272-7863. The examiner can normally be reached on M-F 9:30am-5:30pm.

Examiner interviews are available via telephone, in-person, and video conferencing using a USPTO supplied web-based collaboration tool. To schedule an

interview, applicant is encouraged to use the USPTO Automated Interview Request (AIR) at http://www.uspto.gov/interviewpractice.

If attempts to reach the examiner by telephone are unsuccessful, the examiner's supervisor, Charles Appiah can be reached on 571-272-7904. The fax phone number for the organization where this application or proceeding is assigned is 571-273-8300.

Information regarding the status of an application may be obtained from the Patent Application Information Retrieval (PAIR) system. Status information for published applications may be obtained from either Private PAIR or Public PAIR. Status information for unpublished applications is available through Private PAIR only. For more information about the PAIR system, see http://pair-direct.uspto.gov. Should you have questions on access to the Private PAIR system, contact the Electronic Business Center (EBC) at 866-217-9197 (toll-free). If you would like assistance from a USPTO Customer Service Representative or access to the automated information system, call 800-786-9199 (IN USA OR CANADA) or 571-272-1000.

/KIET M DOAN/
Primary Examiner, Art Unit 2641

Index of Claims	Application/Control No.	Applicant(s)/Patent Under Reexamination
	16/375,879	Koss et al.
	Examiner	Art Unit
	KIET M DOAN	2641

✓	Rejected	-	Cancelled	N	Non-Elected	A	Appeal
=	Allowed	÷	Restricted	I	Interference	O	Objected

CLAIMS

☐ Claims renumbered in the same order as presented by applicant ☐ CPA ☑ T.D. ☐ R.1.47

CLAIM		DATE								
Final	Original	06/24/2019	08/29/2019							
	1	✓	-							
1	2	✓	=							
2	3	✓	=							
5	4	✓	=							
3	5	✓	=							
7	6	✓	=							
8	7	✓	=							
58	8	✓	=							
6	9	✓	=							
4	10	✓	=							
9	11	✓	=							
10	12	✓	=							
59	13	✓	=							
11	14	✓	=							
60	15	✓	=							
61	16	✓	=							
13	17	✓	=							
	18	✓	-							
12	19	✓	=							
	20	✓	-							
14	21	✓	=							
15	22	✓	=							
19	23	✓	=							
16	24	✓	=							
21	25	✓	=							
22	26	✓	=							
18	27	✓	=							
20	28	✓	=							
17	29	✓	=							
23	30	✓	=							
24	31	✓	=							
28	32	✓	=							
25	33	✓	=							
30	34	✓	=							
31	35	✓	=							
27	36	✓	=							
29	37	✓	=							
26	38	✓	=							
	39	✓	-							
33	40	✓	=							
32	41	✓	=							
34	42	✓	=							

Index of Claims	Application/Control No.	Applicant(s)/Patent Under Reexamination
	16/375,879	Koss et al.
	Examiner	**Art Unit**
	KIET M DOAN	2641

CLAIM		DATE								
Final	Original	06/24/2019	08/29/2019							
35	43	✓	=							
36	44	✓	=							
39	45	✓	=							
37	46	✓	=							
42	47	✓	=							
43	48	✓	=							
44	49	✓	=							
45	50	✓	=							
41	51	✓	=							
38	52	✓	=							
40	53	✓	=							
62	54	✓	=							
47	55	✓	=							
48	56	✓	=							
49	57	✓	=							
50	58	✓	=							
51	59	✓	=							
46	60	✓	=							
52	61		=							
53	62		=							
54	63		=							
55	64		=							
56	65		=							
57	66		=							

Search Notes	Application/Control No.	Applicant(s)/Patent Under Reexamination
	16/375,879	Koss et al.
	Examiner	Art Unit
	KIET M DOAN	2641

CPC - Searched*		
Symbol	**Date**	**Examiner**
H04R2201/107	06/24/2019	KD
H04R3/00	06/24/2019	KD

CPC Combination Sets - Searched*		
Symbol	**Date**	**Examiner**

US Classification - Searched*			
Class	**Subclass**	**Date**	**Examiner**
455	466	06/24/2019	KD
	41.2	06/24/2019	KD
	556.1	06/24/2019	KD
	421	06/24/2019	KD
	569.1	06/24/2019	KD
	575.2	06/24/2019	KD
	553.1	06/24/2019	KD
381	58	06/24/2019	KD
	309	06/24/2019	KD
	74	06/24/2019	KD
	update search	08/29/2019	KD
381	312	08/29/2019	KD
700	94	08/29/2019	KD

* See search history printout included with this form or the SEARCH NOTES box below to determine the scope of the search.

/KIET M DOAN/ Primary Examiner, Art Unit 2641	

Search Notes	Application/Control No.	Applicant(s)/Patent Under Reexamination
	16/375,879	Koss et al.
	Examiner	Art Unit
	KIET M DOAN	2641

Search Notes		
Search Notes	**Date**	**Examiner**
Inventor search	06/24/2019	KD
East search	06/24/2019	KD
(earphone earcup headset headphone earbud (head near phone) (head near set)) with acoustic$1 and (earphone earcup headset headphone earbud (head near phone) (head near set)) with antenna$1 and @ad<" 20101010"	06/24/2019	KD
(earphone earcup headset headphone earbud (head near phone) (head near set)) with (transduc$3 acoustic$1) and (earphone earcup headset headphone earbud (head near phone) (head near set)) with antenna$1 and (earphone earcup headset headphone earbud (head near phone) (head near set)) with request$3 with (server$1 (base near station)) and @ad<"20101010"	06/24/2019	KD
((H04M1/6066 OR H04M1/2535 OR H04M1/72558 OR H04R2201/107 OR H04R25/554 OR H04R3/00 OR H04R5/033).CPC.)	06/24/2019	KD
((H04W4/70 OR H04W4/80 OR H04W8/005 OR H04W88/02 OR G06F3/ 167 OR G06F17/28 OR G06F17/27 OR G06F1/1605 OR H04B5/02 OR H04L2012/2841 OR H04L2012/2849 OR H04L65/1069).CPC.)	06/24/2019	KD
(earphone earcup headset headphone earbud) with upgrad$3 with (firmware software) and @ad<"20080202"	08/29/2019	KD
(earphone earcup headset headphone earbud) with upgrad$3 with (firmware software) with (server network (base near station)).clm.	08/29/2019	KD
(G06F8/65 OR H04R5/033 OR H04M1/6041 OR H04M2250/02 OR G10K2210/1081).CPC.)	08/29/2019	KD
update search	08/29/2019	KD

Interference Search			
US Class/CPC Symbol	**US Subclass/CPC Group**	**Date**	**Examiner**
381	57	06/24/2019	KD

/KIET M DOAN/ Primary Examiner, Art Unit 2641	

Issue Classification	Application/Control No.	Applicant(s)/Patent Under Reexamination
	16/375,879	Koss et al.
	Examiner	Art Unit
	KIET M DOAN	2641

CPC						
Symbol					Type	Version
H04R	/	1	/	1041	F	2013-01-01
H04M	/	1	/	0254	I	2013-01-01
H04R	/	5	/	033	I	2013-01-01
H04R	/	5	/	04	I	2013-01-01
H03K	/	17	/	9622	I	2013-01-01
H04W	/	4	/	80	I	2018-02-01
H04R	/	1	/	1091	I	2013-01-01
H04R	/	3	/	00	I	2013-01-01
H04W	/	48	/	20	I	2013-01-01
H03G	/	3	/	02	I	2013-01-01
H04R	/	1	/	02	I	2013-01-01
H04H	/	20	/	95	I	2013-01-01
H04L	/	61	/	6068	I	2013-01-01
H04R	/	25	/	554	A	2013-01-01
H04R	/	2201	/	103	A	2013-01-01
H04R	/	2225	/	55	A	2013-01-01
H04R	/	2420	/	07	A	2013-01-01
H03K	/	2217	/	960785	A	2013-01-01
H04R	/	2201	/	107	A	2013-01-01
H04W	/	84	/	18	A	2013-01-01
H04W	/	84	/	12	A	2013-01-01

CPC Combination Sets								
Symbol					Type	Set	Ranking	Version
	/		/					

NONE		Total Claims Allowed:	
(Assistant Examiner)	(Date)	62	
/KIET M DOAN/ Primary Examiner, Art Unit 2641	29 August 2019	O.G. Print Claim(s)	O.G. Print Figure
(Primary Examiner)	(Date)	2	8

U.S. Patent and Trademark Office

Part of Paper No.: 20190829

Issue Classification	Application/Control No.	Applicant(s)/Patent Under Reexamination
	16/375,879	Koss et al.
	Examiner	**Art Unit**
	KIET M DOAN	2641

INTERNATIONAL CLASSIFICATION				
CLAIMED				
H04R	/	1	/	1008

NON-CLAIMED				
	/		/	

US ORIGINAL CLASSIFICATION	
CLASS	**SUBCLASS**

CROSS REFERENCES(S)						
CLASS	**SUBCLASS (ONE SUBCLASS PER BLOCK)**					

NONE		Total Claims Allowed:	
(Assistant Examiner)	(Date)	62	
/KIET M DOAN/ Primary Examiner, Art Unit 2641	29 August 2019	O.G. Print Claim(s)	O.G. Print Figure
(Primary Examiner)	(Date)	2	8

Issue Classification	Application/Control No.	Applicant(s)/Patent Under Reexamination
	16/375,879	Koss et al.
	Examiner	Art Unit
	KIET M DOAN	2641

☐ Claims renumbered in the same order as presented by applicant ☐ CPA ☑ T.D. ☐ R.1.47

CLAIMS

Final	Original	Final	Original	Final	Original	Final	Original	Final	Original	Final	Original	Final	Original	Final	Original
	1	4	10	12	19	20	28	29	37	37	46	47	55	55	64
1	2	9	11		20	17	29	26	38	42	47	48	56	56	65
2	3	10	12	14	21	23	30		39	43	48	49	57	37	66
5	4	59	13	15	22	24	31	33	40	44	49	50	58		
3	5	11	14	19	23	28	32	32	41	45	50	51	59		
7	6	60	15	16	24	25	33	34	42	41	51	46	60		
8	7	61	16	21	25	30	34	35	43	38	52	52	61		
58	8	13	17	22	26	31	35	36	44	40	53	53	62		
6	9		18	18	27	27	36	39	45	62	54	54	63		

NONE		Total Claims Allowed:	
(Assistant Examiner)	(Date)	62	
/KIET M DOAN/ Primary Examiner, Art Unit 2641	29 August 2019	O.G. Print Claim(s)	O.G. Print Figure
(Primary Examiner)	(Date)	2	8

U.S. Patent and Trademark Office Part of Paper No.: 20190829

PTO/SB/08a (07-09)
Approved for use through 07/31/2012. OMB 0651-0031
U.S. Patent and Trademark Office; U.S. DEPARTMENT OF COMMERCE
Under the Paperwork Reduction Act of 1995, no persons are required to respond to a collection of information unless it contains a valid OMB control number.

Substitute for form 1449/PTO

INFORMATION DISCLOSURE STATEMENT BY APPLICANT

(use as many sheets as necessary)

Sheet 1 of 2

Complete if Known	
Application Number	16/375,879
Filing Date	April 5, 2019
First Named Inventor	Michael J. Koss
Art Unit	2641
Examiner Name	Kiet M. Doan
Attorney Docket Number	080188PCTUSCON10

U.S. PATENT DOCUMENTS

Examiner Initials*	Cite No.[1]	Document Number Number - Kind Code[2] (*if known*)	Publication Date MM-DD-YYYY	Name of Patentee or Applicant of Cited Document	Pages, Columns, Lines, Where Relevant Passages or Relevant Figures Appear
		6006115	12-21-1999	Wingate	
		2008/0226094 A1	09-18-2008	Rutschman	
		2003/0182003 A1	09-25-2003	Takashima	
		2008/0194209 A1	08-14-2008	Haupt et al.	
		2006/0083388 A1	04-20-2006	Rothschild	
		2005/0136839 A1	06-23-2005	Seshadri et al.	
		2008/0215777 A1	09-04-2008	Richenstein et al.	

Examiner Signature	/KIET M DOAN/	Date Considered	08/29/2019

*EXAMINER: Initial if reference considered, whether or not citation is in conformance with MPEP 609. Draw line through citation if not in conformance and not considered. Include copy of this form with next communication to applicant. [1] Applicant's unique citation designation number (optional). [2] See Kinds Codes of USPTO Patent Documents at www.uspto.gov or MPEP 901.04. [3] Enter Office that issued the document, by the two-letter code (WIPO Standard ST.3). [4] For Japanese patent documents, the indication of the year of the reign of the Emperor must precede the serial number of the patent document. [5] Kind of document by the appropriate symbols as indicated on the document under WIPO Standard ST.16 if possible. [6] Applicant is to place a check mark here if English language Translation is attached.

This collection of information is required by 37 CFR 1.97 and 1.98. The information is required to obtain or retain a benefit by the public which is to file (and by the USPTO to process) an application. Confidentiality is governed by 35 U.S.C. 122 and 37 CFR 1.14. This collection is estimated to take 2 hours to complete, including gathering, preparing, and submitting the completed application form to the USPTO. Time will vary depending upon the individual case. Any comments on the amount of time you require to complete this form and/or suggestions for reducing this burden, should be sent to the Chief Information Officer, U.S. Patent and Trademark Office, P.O. Box 1450, Alexandria, VA 22313-1450. DO NOT SEND FEES OR COMPLETED FORMS TO THIS ADDRESS. **SEND TO: Commissioner for Patents, P.O. Box 1450, Alexandria, VA 22313-1450.**

If you need assistance in completing the form, call 1-800-PTO-9199 (1-800-786-9199) and select option 2.

502421031 v1

ALL REFERENCES CONSIDERED EXCEPT WHERE LINED THROUGH. /K.M.D/

PTO/SB/08a (07-09)
Approved for use through 07/31/2012. OMB 0651-0031
U.S. Patent and Trademark Office; U.S. DEPARTMENT OF COMMERCE
Under the Paperwork Reduction Act of 1995, no persons are required to respond to a collection of information unless it contains a valid OMB control number.

Substitute for form 1449/PTO				Complete if Known	
INFORMATION DISCLOSURE STATEMENT BY APPLICANT				Application Number	16/375,879
				Filing Date	April 5, 2019
				First Named Inventor	Michael J. Koss
				Art Unit	2641
(use as many sheets as necessary)				Examiner Name	Kiet M. Doan
Sheet	2	of	2	Attorney Docket Number	080188PCTUSCON10

FOREIGN PATENT DOCUMENTS

Examiner Initials*	Cite No.[1]	Foreign Patent Document: Country Code[3]-Number[4]-Kind Code[5] (*if known*)	Publication Date MM-DD-YYYY	Name of Patentee or Applicant of Cited Document	Pages, Columns, Lines, Where Relevant Passages or Relevant Figures Appear	T[6]
		JP 2008-67258 A	03-21-2008	Audio Technica Corp		

Examiner Signature	/KIET M DOAN/	Date Considered	08/29/2019

*EXAMINER: Initial if reference considered, whether or not citation is in conformance with MPEP 609. Draw line through citation if not in conformance and not considered. Include copy of this form with next communication to applicant. [1] Applicant's unique citation designation number (optional). [2] See Kinds Codes of USPTO Patent Documents at www.uspto.gov or MPEP 901.04. [3] Enter Office that issued the document, by the two-letter code (WIPO Standard ST.3). [4] For Japanese patent documents, the indication of the year of the reign of the Emperor must precede the serial number of the patent document. [5] Kind of document by the appropriate symbols as indicated on the document under WIPO Standard ST.16 if possible. [6] Applicant is to place a check mark here if English language Translation is attached.

This collection of information is required by 37 CFR 1.97 and 1.98. The information is required to obtain or retain a benefit by the public which is to file (and by the USPTO to process) an application. Confidentiality is governed by 35 U.S.C. 122 and 37 CFR 1.14. This collection is estimated to take 2 hours to complete, including gathering, preparing, and submitting the completed application form to the USPTO. Time will vary depending upon the individual case. Any comments on the amount of time you require to complete this form and/or suggestions for reducing this burden, should be sent to the Chief Information Officer, U.S. Patent and Trademark Office, P.O. Box 1450, Alexandria, VA 22313-1450. DO NOT SEND FEES OR COMPLETED FORMS TO THIS ADDRESS. **SEND TO: Commissioner for Patents, P.O. Box 1450, Alexandria, VA 22313-1450.**

If you need assistance in completing the form, call 1-800-PTO-9199 (1-800-786-9199) and select option 2.

ALL REFERENCES CONSIDERED EXCEPT WHERE LINED THROUGH. /K.M.D/

PTO/SB/08a (07-09)
Approved for use through 07/31/2012. OMB 0651-0031
U.S. Patent and Trademark Office; U.S. DEPARTMENT OF COMMERCE
Under the Paperwork Reduction Act of 1995, no persons are required to respond to a collection of information unless it contains a valid OMB control number.

Substitute for form 1449/PTO

INFORMATION DISCLOSURE STATEMENT BY APPLICANT

(use as many sheets as necessary)

Sheet 1 of 1

Complete if Known	
Application Number	16/375,879
Filing Date	April 5, 2019
First Named Inventor	Michael J. Koss
Art Unit	2641
Examiner Name	Kiet M. Doan
Attorney Docket Number	080188PCTUSCON10

U.S. PATENT DOCUMENTS

Examiner Initials*	Cite No.[1]	Document Number Number - Kind Code[2] (*if known*)	Publication Date MM-DD-YYYY	Name of Patentee or Applicant of Cited Document	Pages, Columns, Lines, Where Relevant Passages or Relevant Figures Appear
		9,497,535 B1	11-15-2016	Koss et al.	
		9,729,959 B2	08-08-2017	Koss et al.	

Examiner Signature	/KIET M DOAN/	Date Considered	08/29/2019

*EXAMINER: Initial if reference considered, whether or not citation is in conformance with MPEP 609. Draw line through citation if not in conformance and not considered. Include copy of this form with next communication to applicant. [1] Applicant's unique citation designation number (optional). [2] See Kinds Codes of USPTO Patent Documents at www.uspto.gov or MPEP 901.04. [3] Enter Office that issued the document, by the two-letter code (WIPO Standard ST.3). [4] For Japanese patent documents, the indication of the year of the reign of the Emperor must precede the serial number of the patent document. [5] Kind of document by the appropriate symbols as indicated on the document under WIPO Standard ST.16 if possible. [6] Applicant is to place a check mark here if English language Translation is attached.

This collection of information is required by 37 CFR 1.97 and 1.98. The information is required to obtain or retain a benefit by the public which is to file (and by the USPTO to process) an application. Confidentiality is governed by 35 U.S.C. 122 and 37 CFR 1.14. This collection is estimated to take 2 hours to complete, including gathering, preparing, and submitting the completed application form to the USPTO. Time will vary depending upon the individual case. Any comments on the amount of time you require to complete this form and/or suggestions for reducing this burden, should be sent to the Chief Information Officer, U.S. Patent and Trademark Office, P.O. Box 1450, Alexandria, VA 22313-1450. DO NOT SEND FEES OR COMPLETED FORMS TO THIS ADDRESS. **SEND TO: Commissioner for Patents, P.O. Box 1450, Alexandria, VA 22313-1450.**

If you need assistance in completing the form, call 1-800-PTO-9199 (1-800-786-9199) and select option 2.

502427496 v1 ALL REFERENCES CONSIDERED EXCEPT WHERE LINED THROUGH. /K.M.D/

EAST Search History

EAST Search History (Prior Art)

Ref #	Hits	Search Query	DBs	Default Operator	Plurals	Time Stamp
L1	81	("20030182003" | "20050136839" | "20060083388" | "20080194209" | "20080215777" | "20080226094" | "6006115" | "20040107271" | "20050064853" | "20050198233" | "20060206487" | "20060212442" | "20060212444" | "20060238878" | "20060268830" | "20070008984" | "20070037615" | "20070049198" | "20070053543" | "20070165875" | "20070253603" | "20070297618" | "20080019557" | "20080031470" | "20080062939" | "20080076489" | "20080242312" | "20080298606" | "20080311852" | "20090116678" | "20090129605" | "20090248178" | "20100290642" | "20130039510" | "20130099507" | "20150237439" | "20170318378" | "20180249240" | "20190075390" | "5784685" | "6389463" | "6671494" | "6674864" | "6792091" | "6937712" | "7003515" | "7027311" | "7095455" | "7099370" | "7120388" | "7139585" | "7266390" | "7337027" | "7467021" | "7512414" | "7599679" | "7650168" | "7680490" | "7697899" | "7734055" | "7764775" | "7805210" | "7861312" | "7962482" | "8023663" | "8027638" | "8055007" | "8073137" | "8086281" | "8102836" | "8190203" | "8295516" | "8335312" | "8401202" | "8478880" | "8483755" | "8553865" | "8571544" | "8655420" | "8792945" | "9049502").PN.	US-PGPUB; USPAT	OR	OFF	2019/08/29 11:54
L2	68	("20030182003" | "20050136839" | "20060083388" | "20080194209" | "20080215777" | "20080226094" | "6006115" | "20040107271" | "20050064853" | "20050198233" | "20060206487" | "20060212442" | "20060212444" | "20060238878" | "20060268830" | "20070008984" | "20070037615" | "20070049198" | "20070053543" | "20070165875" | "20070253603" | "20070297618" | "20080019557" | "20080031470" | "20080062939" | "20080076489" | "20080242312" | "20080298606" | "20080311852" | "20090116678" | "20090129605" | "20090248178" | "20100290642" | "20130039510" | "20130099507" | "20150237439" | "20170318378" | "20180249240" |	US-PGPUB; USPAT	OR	OFF	2019/08/29 12:09

		"20190075390" | "5784685" | "6389463" | "6671494" | "6674864" | "6792091" | "6937712" | "7003515" | "7027311" | "7095455" | "7099370" | "7120388" | "7139585" | "7266390" | "7337027" | "7467021" | "7512414" | "7599679" | "7650168" | "7680490" | "7697899" | "7734055" | "7764775" | "7805210" | "7861312" | "7962482" | "8023663" | "8027638" | "8055007" | "8073137" | "8086281" | "8102836" | "8190203" | "8295516" | "8335312" | "8401202" | "8478880" | "8483755" | "8553865" | "8571544" | "8655420" | "8792945" | "9049502").PN. and @ad<"20080505"				
L3	0	2 and firmware with upgrad$3 with (headphone earpiece)	US-PGPUB; USPAT; USOCR; FPRS; EPO; JPO; DERWENT; IBM_TDB	OR	OFF	2019/08/29 12:11
L4	10	firmware with upgrad$3 with (headphone earpiece)	US-PGPUB; USPAT; USOCR; FPRS; EPO; JPO; DERWENT; IBM_TDB	OR	OFF	2019/08/29 12:11
L5	72	("20040107271" | "20050064853" | "20050198233" | "20060206487" | "20060212442" | "20060212444" | "20060238878" | "20060268830" | "20070008984" | "20070037615" | "20070049198" | "20070053543" | "20070154050" | "20070165875" | "20070253603" | "20070297618" | "20080019557" | "20080031470" | "20080062939" | "20080076489" | "20080167088" | "20080242312" | "20080298606" | "20080311852" | "20090116678" | "20090129605" | "20090248178" | "20100290642" | "20130039510" | "20130099507" | "20150237439" | "20170318378" | "5784685" | "6389463" | "6671494" | "6674864" | "6792091" | "6937712" | "7003515" | "7027311" | "7095455" | "7099370" | "7120388" | "7139585" | "7266390" | "7337027" | "7467021" | "7512414" | "7599679" | "7650168" | "7680490" | "7697899" | "7734055" | "7764775" | "7805210" | "7861312" | "7962482" | "8023663" | "8027638" | "8073137" | "8102836" | "8190203" | "8295516" | "8335312" | "8401202" | "8478880" | "8483755" | "8553865" | "8571544" | "8655420" | "8792945" | "9049502").PN.	US-PGPUB; USPAT; USOCR	OR	OFF	2019/08/29 12:23
L6	19	(earphone earcup headset headphone earbud) with upgrad$3 with (firmware software) and @ad<"20080202"	US-PGPUB; USPAT; USOCR;	OR	ON	2019/08/29 12:24

			FPRS; EPO; JPO; DERWENT; IBM_TDB			
L7	55	("20030110484" | "20030217193" | "20030217358" | "20040015952" | "20040107416" | "20040199897" | "20040240423" | "20040243991" | "20040254013" | "20040254014" | "20050055684" | "20050064859" | "20050081080" | "20050144651" | "20050160217" | "20050246701" | "20060092323" | "20060136899" | "20070033387" | "20070100936" | "20070207800" | "20070271389" | "20070294385" | "20080270805" | "20090063696" | "20090113121" | "20110047123" | "5206863" | "5550997" | "5594903" | "5649187" | "5673385" | "5784611" | "5815722" | "5949772" | "6047304" | "6052753" | "6198705" | "6263452" | "6281929" | "6425122" | "6467003" | "6467087" | "6473832" | "6748116" | "6928108" | "6934873" | "7069452" | "7293203" | "7318172" | "7409539" | "7480907" | "7774820" | "8160089" | "8407526").PN.	US-PGPUB; USPAT; USOCR	OR	OFF	2019/08/29 12:26
L8	3	(earphone earcup headset headphone earbud) with upgrad$3 with (firmware software) with (server network (base near station)).clm.	US-PGPUB; USPAT; USOCR; FPRS; EPO; JPO; DERWENT; IBM_TDB	OR	ON	2019/08/29 12:28
L9	2	(earphone earcup headset headphone earbud) with upgrad$3 with (firmware software) with (server network (base near station)) and @ad<"20080505"	US-PGPUB; USPAT; USOCR; FPRS; EPO; JPO; DERWENT; IBM_TDB	OR	ON	2019/08/29 12:28
L10	10	6 AND ((G06F8/65 OR H04R5/033 OR H04M1/6041 OR H04M2250/02 OR G10K2210/1081).CPC.)	US-PGPUB; USPAT; USOCR; FPRS; EPO; JPO; DERWENT; IBM_TDB	OR	ON	2019/08/29 12:31
S1	2	(mobile wireless $4phone) with out near1 (rang$4 area) and (mobilw wireless pda $4phone) with automat$5 with (chang$3 convert$4 divert$4) with (ip internet digital$1)	USPAT	OR	OFF	2011/09/19 20:35
S2	10	(mobile wireless $4phone) with out near1 (rang$4 area) and (mobile wireless pda $4phone) with automat$5 with (chang$3 convert$4 divert$4) with (ip internet digital$1)	US-PGPUB; USPAT; USOCR; EPO; JPO; DERWENT	OR	OFF	2011/09/19 20:35
S3	0	(mobile wireless $4phone) with out near1 (rang$4 area) and (mobile wireless pda $4phone) with automat$5	US-PGPUB; USPAT; USOCR;	OR	OFF	2011/09/19 20:42

		with (chang$3 convert$4 divert$4) with (mode state) with network	EPO; JPO; DERWENT			
S4	3	(mobile wireless $4phone) with out near1 (rang$4 area) and (mobile wireless pda $4phone) with automat$5 with (chang$3 convert$4 divert$4) with network	US-PGPUB; USPAT; USOCR; EPO; JPO; DERWENT	OR	OFF	2011/09/19 20:42
S5	11	(mobile wireless $4phone) with out near1 (rang$4 area) and automat$5 with (chang$3 convert$4 divert$4) with network	US-PGPUB; USPAT; USOCR; EPO; JPO; DERWENT	OR	OFF	2011/09/19 20:44
S6	872	(mobile wireless $4phone) with out near1 (rang$4 area) and (mobile wireless pda $4phone) with (chang$3 convert$4 divert$4) with network	US-PGPUB; USPAT; USOCR; EPO; JPO; DERWENT	OR	OFF	2011/09/19 20:45
S7	145	(mobile wireless $4phone) with out near1 (rang$4 area) and (mobile wireless pda $4phone) with (chang$3 convert$4 divert$4) with network with (internet digital)	US-PGPUB; USPAT; USOCR; EPO; JPO; DERWENT	OR	OFF	2011/09/19 20:45
S8	8	acoustic near transducer same (convert$3 chang$3) with (analog rf frequency signal$3) with (audio sound) and firmware	USPAT	OR	OFF	2011/09/19 21:30
S9	46	acoustic near transducer same (convert$3 chang$3) with (analog rf frequency signal$3) with (audio sound) and firmware	US-PGPUB; USPAT; USOCR; EPO; JPO; DERWENT	OR	OFF	2011/09/19 21:30
S10	2	"7697899".pn.	US-PGPUB; USPAT; USOCR; EPO; JPO; DERWENT	OR	OFF	2011/09/19 21:33
S11	130	(mobile wireless) same acoustic near transducer and (convert$3 chang$3) with (analog rf frequency signal$3) with (audio sound) and digital and (audio sound)	US-PGPUB; USPAT; USOCR; EPO; JPO; DERWENT	OR	OFF	2011/09/20 00:33
S12	25	S11 and stream$3 and server	US-PGPUB; USPAT; USOCR; EPO; JPO; DERWENT	OR	OFF	2011/09/20 00:33
S13	91	("20020069263" | "20040169581" | "2660662" | "3651471" | "3732536" | "3742463" | "3845391" | "4025851" | "4237449" | "4425642" | "4514725" | "4642685" | "4718106" | "4750034" | "4807031" | "4840602" | "4846693" | "4923428" | "4945412" | "5085610" | "5090936" | "5108341" | "5113437" | "5136613" | "5191615" | "5301167" | "5305348" | "5319735" | "5353352" | "5412620" | "5436941" | "5442343" | "5446756" | "5450490" | "5479442" | "5499265" | "5519779" | "5539705" | "5555258" | "5574773" | "5579124" |	US-PGPUB; USPAT; USOCR	OR	OFF	2011/09/20 00:35

		"5604767" | "5657379" | "5663766" | "5687191" | "5719937" | "5734639" | "5752880" | "5774452" | "5822360" | "5828325" | "5848155" | "5930369" | "5937000" | "5945932" | "5960398" | "5978413" | "5999899" | "6021432" | "6022273" | "6031914" | "6035177" | "6061793" | "6125172" | "6290566" | "6298322" | "6370666" | "6389055" | "6434253" | "6438117" | "6442283" | "6449596" | "6577881" | "6584138" | "6636551" | "6650877" | "6708214" | "6737957" | "6757300" | "6765950" | "6773344" | "6782253" | "6832093" | "6850555" | "6876623" | "6892175" | "6983051" | "7031271" | "7065342" | "7158676").PN.				
S14	187	mbsfn and sfn	US-PGPUB; USPAT; USOCR; EPO; JPO; DERWENT	OR	OFF	2012/02/29 11:27
S15	1	12/031462	US-PGPUB; USPAT; USOCR; EPO; JPO; DERWENT	OR	OFF	2012/02/29 11:29
S16	0	(mobile wireless $4phone) with out near1 (rang$4 area) and transducer with (convert$3 chang$3 divert$3) with (sound audio) and (adhoc (ad adj hoc))	USPAT	OR	OFF	2012/02/29 12:11
S17	1	(mobile wireless $4phone) with out near1 (rang$4 area) and transducer with (convert$3 chang$3 divert$3) with (sound audio) and (adhoc (ad adj hoc))	US-PGPUB; USPAT; USOCR; FPRS; EPO; JPO; DERWENT; IBM_TDB	OR	OFF	2012/02/29 12:11
S18	2	(mobile wireless $4phone) and transducer with (convert$3 chang$3 divert$3) with (sound audio) and (adhoc (ad adj hoc)) and (signal$3 rf frequency) with threshold.clm.	US-PGPUB; USPAT; USOCR; FPRS; EPO; JPO; DERWENT; IBM_TDB	OR	OFF	2012/02/29 12:15
S19	19	(mobile wireless $4phone) and transducer with (convert$3 chang$3 divert$3) with (sound audio) and (adhoc (ad adj hoc)) and (signal$3 rf frequency) with threshold	US-PGPUB; USPAT; USOCR; FPRS; EPO; JPO; DERWENT; IBM_TDB	OR	OFF	2012/02/29 12:16
S20	20	transducer with (convert$3 chang$3 divert$3) with (sound audio) and (adhoc (ad adj hoc)) and (signal$3 rf frequency) with threshold	US-PGPUB; USPAT; USOCR; FPRS; EPO; JPO; DERWENT; IBM_TDB	OR	OFF	2012/02/29 12:17
S21	1003	(mobile wireless $4phone) and (adhoc	US-PGPUB;	OR	OFF	2012/02/29

		(ad adj hoc)) and (signal$3 rf frequency) with threshold and "455"/$.ccls.	USPAT; USOCR; FPRS; EPO; JPO; DERWENT; IBM_TDB			12:20
S22	8	(mobile wireless $4phone) with (adhoc (ad adj hoc)) with (signal$3 rf frequency) with threshold and "455"/$.ccls.	US-PGPUB; USPAT; USOCR; FPRS; EPO; JPO; DERWENT; IBM_TDB	OR	OFF	2012/02/29 12:21
S23	38203	(mobile wireless $4phone) and transducer wand (convert$3 chang$3 divert$3) with (sound audio) and (adhoc (ad adj hoc)) and threshold and rang$3	USPAT	OR	OFF	2012/02/29 13:54
S24	258	(mobile wireless $4phone) and transducer and (convert$3 chang$3 divert$3) with (sound audio) and (adhoc (ad adj hoc)) and threshold and rang$3	US-PGPUB; USPAT; USOCR; FPRS; EPO; JPO; DERWENT; IBM_TDB	OR	OFF	2012/02/29 13:54
S25	21	(mobile wireless $4phone) and transducer and (convert$3 chang$3 divert$3) with (sound audio) and (adhoc (ad adj hoc)) and threshold and rang$3.clm.	US-PGPUB; USPAT; USOCR; FPRS; EPO; JPO; DERWENT; IBM_TDB	OR	OFF	2012/02/29 13:55
S26	25	(mobile wireless $4phone) and transducer and (convert$3 chang$3 divert$3) with (sound audio) and (adhoc (ad adj hoc)) and threshold and rang$3 and "455"/$.ccls.	US-PGPUB; USPAT; USOCR; FPRS; EPO; JPO; DERWENT; IBM_TDB	OR	OFF	2012/02/29 13:59
S27	9	(mobile wireless $4phone) and transducer and (convert$3 chang$3 divert$3) with (sound audio) and (adhoc (ad adj hoc)) and threshold and rang$3 and earphone	US-PGPUB; USPAT; USOCR; FPRS; EPO; JPO; DERWENT; IBM_TDB	OR	OFF	2012/02/29 14:00
S28	1	(mobile wireless $4phone) and transducer and (convert$3 chang$3 divert$3) with (sound audio) and (adhoc (ad adj hoc)) and threshold and rang$3 and earphone.clm.	US-PGPUB; USPAT; USOCR; FPRS; EPO; JPO; DERWENT; IBM_TDB	OR	OFF	2012/02/29 14:03
S29	2	"8190203".pn.	US-PGPUB; USPAT; USOCR; EPO; JPO; DERWENT	OR	OFF	2013/03/21 23:39
S30	27	("20050064853" | "20050198233" | "20060206487" | "20060212442" | "20060212444" | "20070008984" |	US-PGPUB; USPAT; USOCR	OR	ON	2013/03/29 14:23

		"20070037615" | "20070049198" | "20070116316" | "20070165875" | "20070230727" | "20080062939" | "20080101279" | "20080291891" | "20100246788" | "5784685" | "6792091" | "6937712" | "7003515" | "7027311" | "7099370" | "7120388" | "7139585" | "7599679" | "7697899" | "7764775" | "7805210").PN.				
S31	0	(server computer) with internet and stream$4 near audio near server and (headset earphone$1 bluetooth) with (ap (access near point)) with internet	US-PGPUB; USPAT; USOCR	OR	ON	2013/03/29 14:34
S32	41	(server computer) with internet and (stream$4 near audio) and server and (headset earphone$1 bluetooth) with (ap (access near point)) with internet	US-PGPUB; USPAT; USOCR	OR	ON	2013/03/29 14:35
S33	2287	host near server and internet and (stream$4 near audio) and server and (headset earphone$1 bluetooth) with (ap (access near point)) and register$3and approva$4 with (song media)	US-PGPUB; USPAT; USOCR	OR	ON	2013/03/29 14:52
S34	4	host near server and internet and (stream$4 near audio) and server and (headset earphone$1 bluetooth) with (ap (access near point)) and register$3 and approva$4 with (song media)	US-PGPUB; USPAT; USOCR	OR	ON	2013/03/29 14:56
S35	4	host near server and internet and (stream$4 near audio) and server and (headset earphone$1 bluetooth) with (ap (access near point)) and approva$4 with (song media)	US-PGPUB; USPAT; USOCR	OR	ON	2013/03/29 14:57
S36	56	(earphone headset) with receiv$3 with (song audio music) and convert$4 near digital same analog and acoustic$1 with transducer$3	US-PGPUB; USPAT; EPO; JPO	OR	ON	2013/03/29 18:50
S37	769	(earphone headset) and convert$4 near3 digital with analog and acoustic$1 with transducer$3	US-PGPUB; USPAT; EPO; JPO	OR	ON	2013/03/29 19:11
S38	464	S37 and @ad<"20080101"	US-PGPUB; USPAT; EPO; JPO	OR	ON	2013/03/29 19:13
S39	30	S37 and @ad<"20080101" and "455"/$.ccls.	US-PGPUB; USPAT; EPO; JPO	OR	ON	2013/03/29 19:15
S40	0	("8190203.pn.").PN.	US-PGPUB; USPAT; USOCR; EPO; JPO	OR	OFF	2013/06/08 23:17
S41	0	("8190203.pn.").PN.	US-PGPUB; USPAT; USOCR; FPRS; EPO; JPO; DERWENT; IBM_TDB	OR	OFF	2013/06/08 23:18
S42	2	("8190203").PN.	US-PGPUB; USPAT;	OR	OFF	2013/06/08 23:18

			USOCR; FPRS; EPO; JPO; DERWENT; IBM_TDB			
S43	27	("20050064853" | "20050198233" | "20060206487" | "20060212442" | "20060212444" | "20070008984" | "20070037615" | "20070049198" | "20070116316" | "20070165875" | "20070230727" | "20080062939" | "20080101279" | "20080291891" | "20100246788" | "5784685" | "6792091" | "6937712" | "7003515" | "7027311" | "7099370" | "7120388" | "7139585" | "7599679" | "7697899" | "7764775" | "7805210").PN.	US-PGPUB; USPAT; USOCR	OR	ON	2013/06/08 23:22
S44	9	((cd adj player) ipad) with audio near jack same (network internet wireless)	US-PGPUB; USPAT; USOCR	OR	ON	2013/06/08 23:26
S45	55	("20010050991" | "20010050993" | "20010053228" | "20020102005" | "20040136522" | "20040198436" | "20040204185" | "20050004796" | "20050064915" | "20050090295" | "20050130697" | "20050146227" | "20050177365" | "20050181826" | "20050232448" | "20050239434" | "20060013410" | "20060046656" | "20060046778" | "20060134959" | "20060166705" | "20060193479" | "20070015486" | "20070025561" | "20070036384" | "20070041582" | "20070082612" | "20070225035" | "20070226384" | "20070239849" | "20070247794" | "20080167092" | "20080201138" | "5604813" | "5787180" | "5825897" | "5951141" | "5978689" | "5991637" | "6061456" | "6108415" | "6415034" | "6507650" | "6873862" | "6975984" | "7155214" | "7181233" | "7187948" | "7190797" | "7251332" | "7254420" | "7292880" | "7346176" | "7395090" | "7433715").PN.	US-PGPUB; USPAT; USOCR	OR	ON	2013/06/08 23:32
S46	550	((cd adj player) ipad mp3) and (server computer) with encod$4 with (audio sound) and (earphone earcup headset headphone)	US-PGPUB; USPAT; USOCR	OR	ON	2013/06/10 12:19
S47	6	((cd adj player) ipad mp3) and (server computer) with encod$4 with analog with digital with (audio sound) and (earphone earcup headset headphone) same acoustic	US-PGPUB; USPAT; USOCR	OR	ON	2013/06/10 12:21
S48	1	"8055361".pn.	US-PGPUB; USPAT; USOCR	OR	ON	2013/06/10 12:24
S49	2	"20080167092"	US-PGPUB; USPAT; USOCR	OR	ON	2013/06/10 12:27
S50	2	"20040156012"	US-PGPUB;	OR	ON	2013/06/10

			USPAT; EPO; JPO			12:30
S51	108	((cd adj player) ipad mp3) same (server computer) with encod$4 with (audio sound) and (earphone earcup headset headphone) and internet	US-PGPUB; USPAT; USOCR	OR	ON	2013/06/10 12:41
S52	41	(server computer) with encod$4 with (analog digital) and ((cd adj player) ipad mp3) with (earphone earcup headset headphone) and internet	US-PGPUB; USPAT; USOCR	OR	ON	2013/06/10 12:44
S53	0	"200700826612"	US-PGPUB; USPAT; USOCR	OR	ON	2013/06/10 12:57
S54	2	"20070082612"	US-PGPUB; USPAT; EPO; JPO	OR	ON	2013/06/10 12:58
S55	12	((cd adj player) ipad mp3) with (earphone earcup headset headphone) same (convert$3 switch$3 chang$3) with (analog digital) and acoustic with analog	US-PGPUB; USPAT; USOCR	OR	ON	2013/06/10 15:32
S56	0	((cd adj player) ipad mp3) and (earphone earcup headset headphone) same acoustic with aoutput$4 with analog	US-PGPUB; USPAT; USOCR	OR	ON	2013/06/10 16:15
S57	18	((cd adj player) ipad mp3) and (earphone earcup headset headphone) same acoustic with output$3 with analog	US-PGPUB; USPAT; USOCR	OR	ON	2013/06/10 16:15
S58	178	(earphone earcup headset headphone) same acoustic with output$3 with analog	US-PGPUB; USPAT; USOCR	OR	ON	2013/06/10 16:23
S59	5	(earphone earcup headset headphone) same (mp3 (cd near player)) and server with song$1 and register$3 with song$1	US-PGPUB; USPAT; USOCR	OR	ON	2013/06/10 21:24
S60	75	(earphone earcup headset headphone) same (mp3 (cd near player)) same ear near canal	US-PGPUB; USPAT; USOCR	OR	ON	2013/06/10 22:40
S61	1	(earphone earcup headset headphone) same (mp3 (cd near player)) same ear near canal and wifi	US-PGPUB; USPAT; USOCR	OR	ON	2013/06/10 23:02
S62	20	(earphone earcup headset headphone) same (mp3 (cd near player)) same ear near canal and (wifi bluetooth)	US-PGPUB; USPAT; USOCR	OR	ON	2013/06/10 23:02
S63	1	"8190203".pn.	US-PGPUB; USPAT; EPO; JPO	OR	ON	2013/10/29 22:19
S64	1	"8571544".pn.	US-PGPUB; USPAT; EPO; JPO	OR	ON	2013/10/29 22:21
S65	0	(earphone headset) same coustic$1 with transducer$3 and (earphone headset) with wireless with (server internet) and play$4 with (song music) with (server internet)	US-PGPUB; USPAT; EPO; JPO	OR	ON	2013/10/29 23:16
S66	5	(earphone headset) same acoustic$1 with transducer$3 and (earphone	US-PGPUB; USPAT;	OR	ON	2013/10/29 23:23

		headset) with wireless with (server internet) and play$4 with (song music) with (server internet)	EPO; JPO			
S67	25	(earphone headset) same acoustic$1 with transducer$3 and (earphone headset) with wireless with (server internet)	US-PGPUB; USPAT; EPO; JPO	OR	ON	2013/10/29 23:24
S68	1826	(earphone headset) same (play$4 operat$3) with (music song multimedia media audio) with (server internet)	US-PGPUB; USPAT; EPO; JPO	OR	ON	2013/10/30 12:30
S69	418	(earphone headset) with (play$4 operat$3) with (music song multimedia media audio) with (server internet)	US-PGPUB; USPAT; EPO; JPO	OR	ON	2013/10/30 12:31
S70	252	(earphone headset) with (play$4 operat$3) with (music song multimedia media audio) with (server internet) and @ad<"20080505"	US-PGPUB; USPAT; EPO; JPO	OR	ON	2013/10/30 12:31
S71	119	(earphone headset) near3 (music song multimedia media audio) with (server internet) and @ad<"20080505"	US-PGPUB; USPAT; EPO; JPO	OR	ON	2013/10/30 12:36
S72	15	(earphone headset) near3 (music song) with (server internet) and @ad<"20080505"	US-PGPUB; USPAT; EPO; JPO	OR	ON	2013/10/30 13:27
S73	1	"8571544".pn.	US-PGPUB; USPAT; EPO; JPO	OR	ON	2013/12/07 12:49
S74	4	(earphone headset headphone) with wireless with receiv$3 with (song audio music) same (server (base near station)) same internet.clm.	US-PGPUB; USPAT; EPO; JPO	OR	ON	2013/12/07 12:54
S75	73	("20020122396" | "20020132630" | "20020147016" | "20020160779" | "20020160806" | "20020164991" | "20040085938" | "4617674" | "5115463" | "5255307" | "5345448" | "5353331" | "5410588" | "5448569" | "5469496" | "5506887" | "5519706" | "5519759" | "5537434" | "5546411" | "5579379" | "5594718" | "5610972" | "5664005" | "5715521" | "5734699" | "5745850" | "5758281" | "5809415" | "5818824" | "5822313" | "5845211" | "5887256" | "5896375" | "5911120" | "5913163" | "5960344" | "5999813" | "6005856" | "6009332" | "6011975" | "6021138" | "6047177" | "6052602" | "6055427" | "6058106" | "6069588" | "6078571" | "6119006" | "6151311" | "6163546" | "6175860" | "6201962" | "6205552" | "6212395" | "6226515" | "6259685" | "6275518" | "6278699" | "6295310" | "6321089" | "6396457" | "6430395" | "6466791" | "6490446" | "6510381" | "6529732" | "6628632" | "6640098" | "6650871" | "6665541" | "6675015" | "6714524").PN.	US-PGPUB; USPAT; USOCR	OR	ON	2013/12/07 13:00
S76	483	(earphone headset headphone) with receiv$3 with (song audio music)	US-PGPUB; USPAT;	OR	ON	2013/12/07 13:12

		same (server (base near station))	EPO; JPO			
S77	61	(earphone headset headphone) with receiv$3 with (song audio music) same (server (base near station)) same internet	US-PGPUB; USPAT; EPO; JPO	OR	ON	2013/12/07 13:13
S78	21	("4659877" | "4872160" | "4872197" | "4958341" | "5029196" | "5109405" | "5341374" | "5375068" | "5410754" | "5434913" | "5490247" | "5493568" | "5608786" | "5724355" | "5726984" | "5751706" | "5802160" | "5815562" | "5946299" | "5999525" | "6067350").PN.	US-PGPUB; USPAT; USOCR	OR	ON	2013/12/07 13:20
S79	38	(earphone headset headphone) with receiv$3 with (song audio music) same (server (base near station)).clm.	US-PGPUB; USPAT; EPO; JPO	OR	ON	2013/12/07 13:22
S80	3	"9049502".pn.	US-PGPUB; USPAT; USOCR; FPRS; EPO; JPO; DERWENT; IBM_TDB	OR	OFF	2016/06/14 14:56
S81	2	"8571544".pn.	US-PGPUB; USPAT; USOCR; FPRS; EPO; JPO; DERWENT; IBM_TDB	OR	OFF	2016/06/14 15:01
S82	2	"8190203".pn.	US-PGPUB; USPAT; USOCR; FPRS; EPO; JPO; DERWENT; IBM_TDB	OR	OFF	2016/06/14 15:03
S83	1	14/695696	US-PGPUB; USPAT; USOCR; FPRS; EPO; JPO; DERWENT; IBM_TDB	OR	OFF	2016/06/14 15:36
S86	23	digital near player and adapter and acoustic near transducer$1	US-PGPUB; USPAT; USOCR; FPRS; EPO; JPO; DERWENT; IBM_TDB	OR	OFF	2016/06/14 15:59
S87	4	S86 AND ((H04W52/0229 OR H04R1/1091 OR H04R2201/103 OR H04R2225/55 OR H04R2420/07 OR H04R25/554 OR H04R3/00 OR H04R5/033 OR H04R5/04).CPC.)	US-PGPUB; USPAT; USOCR; FPRS; EPO; JPO; DERWENT; IBM_TDB	OR	OFF	2016/06/14 16:02
S88	2	digital near player and acoustic near	US-PGPUB;	OR	OFF	2016/06/14

		transducer$1 and plugg$2 and 381/$.ccls.	USPAT; USOCR; FPRS; EPO; JPO; DERWENT; IBM_TDB			16:03
S89	28	digital near player and acoustic near transducer$1 and 381/$.ccls.	US-PGPUB; USPAT; USOCR; FPRS; EPO; JPO; DERWENT; IBM_TDB	OR	OFF	2016/06/14 16:03
S90	6	("3894196" | "4110583" | "4490842" | "5022486" | "5138663" | "5459290").PN.	US-PGPUB; USPAT; USOCR	OR	OFF	2016/06/14 16:04
S91	5	("4432097" | "4641361" | "7215202" | "7583809" | "8150067").PN.	US-PGPUB; USPAT; USOCR	OR	OFF	2016/06/14 16:05
S92	13	S89 AND ((H04R5/0335 OR H04R2460/13 OR H04R5/033 OR H04R1/1016 OR H04R2201/107 OR H04R2499/11 OR H04R19/00 OR H04R2201/023 OR H04R2400/01 OR G02C11/06 OR G02C11/10).CPC.)	US-PGPUB; USPAT; USOCR; FPRS; EPO; JPO; DERWENT; IBM_TDB	OR	OFF	2016/06/14 16:07
S93	19	digital near player and adapter and acoustic near transducer$1 and wireless$2 with network	US-PGPUB; USPAT; USOCR; FPRS; EPO; JPO; DERWENT; IBM_TDB	OR	OFF	2016/06/14 16:12
S94	139	("20060212442" | "20060268830" | "8478880" | "8571544" | "7003515" | "7650168" | "8335312" | "20090063703" | "20070008984" | "20070297618" | "20080298606" | "5784685" | "6671494" | "7027311" | "7099370" | "7266390" | "7734055" | "20130039510" | "7467021" | "8401202" | "20040107271" | "20070037615" | "20070165875" | "20080031470" | "20080076489" | "6674864" | "6937712" | "7095455" | "7139585" | "7764775" | "7805210" | "8023663" | "8027638" | "8102836" | "9049502" | "20050198233" | "20060206487" | "20070253603" | "6389463" | "7120388" | "7599679" | "7680490" | "7861312" | "7962482" | "8553865" | "20050240296" | "20070049198" | "20080062939" | "6792091" | "7697899" | "8295516" | "8655420" | "20050064853" | "20100290642" | "20150237439" | "7337027" | "7512414" | "8190203" | "8792945").PN.	US-PGPUB; USPAT; USOCR; EPO; JPO; DERWENT	OR	OFF	2016/07/28 10:00
S95	0	S94 and (multiple plurality multi) with acoustic near1 transducer$1 and adapter$3	US-PGPUB; USPAT; USOCR; EPO; JPO;	OR	OFF	2016/07/28 10:02

			DERWENT			
S96	63	(multiple plurality multi) with acoustic near1 transducer$1 and adapter$3	US-PGPUB; USPAT; USOCR; EPO; JPO; DERWENT	OR	OFF	2016/07/28 10:02
S97	10	(multiple plurality multi) with acoustic near1 transducer$1 and adapter$3.clm.	US-PGPUB; USPAT; USOCR; EPO; JPO; DERWENT	OR	OFF	2016/07/28 10:02
S98	0	(earphone headset) near3 (music song multimedia media audio) with (server internet) and @ad<"20080505".clm.	US-PGPUB; USPAT; EPO; JPO	OR	ON	2016/07/28 10:11
S99	10	digital near player and adapter and acoustic near transducer$1 and wireless$2 with network.clm.	US-PGPUB; USPAT; USOCR; FPRS; EPO; JPO; DERWENT; IBM_TDB	OR	OFF	2016/07/28 10:11
S100	23	digital near player and adapter and acoustic$1 near transducer$1 and wireless$2	US-PGPUB; USPAT; USOCR; FPRS; EPO; JPO; DERWENT; IBM_TDB	OR	OFF	2016/07/28 10:23
S101	17	digital near player and adapter and acoustic$1 near transducer$1 and wireless$2.clm.	US-PGPUB; USPAT; USOCR; FPRS; EPO; JPO; DERWENT; IBM_TDB	OR	OFF	2016/07/28 10:29
S102	6	digital near player and adapter and (multiple plurality multi) with acoustic$1 and transducer$1	US-PGPUB; USPAT; USOCR; FPRS; EPO; JPO; DERWENT; IBM_TDB	OR	OFF	2016/07/28 10:40
S103	2	adapter$3 with digital near player$3 and acoustic$1 near transducer$1	US-PGPUB; USPAT; USOCR; FPRS; EPO; JPO; DERWENT; IBM_TDB	OR	OFF	2016/07/28 10:42
S104	2	adapter$3 same digital$1 near player$3 and acoustic$1 near transducer$1	US-PGPUB; USPAT; USOCR; FPRS; EPO; JPO; DERWENT; IBM_TDB	OR	OFF	2016/07/28 10:42
S105	29	adapter$3 and digital$1 near player$3 and acoustic$1 near transducer$1	US-PGPUB; USPAT; USOCR; FPRS;	OR	OFF	2016/07/28 10:42

			EPO; JPO; DERWENT; IBM_TDB			
S106	2	adapter$3 and digital$1 near player$3 and acoustic$1 near transducer$1.clm.	US-PGPUB; USPAT; USOCR; FPRS; EPO; JPO; DERWENT; IBM_TDB	OR	OFF	2016/07/28 11:01
S107	2	"8497535".pn.	US-PGPUB; USPAT; USOCR; EPO; JPO; DERWENT	OR	OFF	2017/05/24 10:49
S108	2	"9497535".pn.	US-PGPUB; USPAT; USOCR; EPO; JPO; DERWENT	OR	OFF	2017/05/24 10:49
S109	2	"9438987".pn.	US-PGPUB; USPAT; USOCR; EPO; JPO; DERWENT	OR	OFF	2017/05/24 10:50
S110	3	"9049502".pn.	US-PGPUB; USPAT; USOCR; EPO; JPO; DERWENT	OR	OFF	2017/05/24 10:52
S111	3	"5571544".pn.	US-PGPUB; USPAT; USOCR; EPO; JPO; DERWENT	OR	OFF	2017/05/24 10:58
S112	2	"8571544".pn.	US-PGPUB; USPAT; USOCR; EPO; JPO; DERWENT	OR	OFF	2017/05/24 10:58
S113	2	"8190203".pn.	US-PGPUB; USPAT; USOCR; EPO; JPO; DERWENT	OR	OFF	2017/05/24 11:16
S114	3	"8655420".pn.	US-PGPUB; USPAT; USOCR; EPO; JPO; DERWENT	OR	OFF	2017/05/24 11:18
S115	0	"90729959".pn.	US-PGPUB; USPAT; USOCR; EPO; JPO; DERWENT	OR	OFF	2018/02/12 13:34
S116	3	"9729959".pn.	US-PGPUB; USPAT; USOCR; EPO; JPO; DERWENT	OR	OFF	2018/02/12 13:34

S117	2	"9497535".pn.	US-PGPUB; USPAT; USOCR; EPO; JPO; DERWENT	OR	OFF	2018/02/12 13:35
S118	902	digital near player and adapter and acoustic near transducer$1 dock$ near station and elongat$3 and bluetooth	US-PGPUB; USPAT; USOCR; FPRS; EPO; JPO; DERWENT; IBM_TDB	OR	OFF	2018/02/12 14:49
S123	2	digital near player and acoustic$1 with transducer$1 and dock$ near station	US-PGPUB; USPAT; USOCR; FPRS; EPO; JPO; DERWENT; IBM_TDB	OR	OFF	2018/02/12 14:51
S124	1	(earphone headset) with (play$4 operat$3) with (music song multimedia media audio) with (server internet) and transduc$3 and elongat$3 and wireless and (recharg$5 charg$5) with batter$3.clm.	US-PGPUB; USPAT; EPO; JPO	OR	ON	2018/03/19 10:29
S125	1	S124 AND ((H04R2201/103 OR H04R2201/107 OR H04R25/554 OR H04R5/033).CPC.)	US-PGPUB; USPAT; EPO; JPO	OR	ON	2018/03/19 10:32
S126	1	(earphone headset) with (play$4 operat$3) with (music song multimedia media audio) with (server internet) and transduc$3 and elongat$3 and wireless and (recharg$5 charg$5) with batter$3	US-PGPUB; USPAT; EPO; JPO	OR	ON	2018/03/19 10:32
S127	1	(earphone headset) with (play$4 operat$3) with (music song multimedia media audio) with (server internet) and transduc$3 and elongat$3 and (recharg$5 charg$5) with batter$3	US-PGPUB; USPAT; EPO; JPO	OR	ON	2018/03/19 10:39
S128	7	(earphone headset) with (play$4 operat$3) with (music song multimedia media audio) with (server internet) and transduc$3 and elongat$3 and (recharg$5 charg$5)	US-PGPUB; USPAT; EPO; JPO	OR	ON	2018/03/19 10:40
S129	2	S128 AND ((H04R1/02 OR H04R5/033 OR H04R2201/107 OR H04R25/554 OR H04R3/00 OR H04W4/80).CPC.)	US-PGPUB; USPAT; EPO; JPO	OR	ON	2018/03/19 10:42
S130	9	"49783294".FMID.	US-PGPUB; USPAT; FPRS	OR	OFF	2018/03/19 10:42
S131	158	("20010011951" | "20010026626" | "20020001381" | "20020012441" | "20020068995" | "20020115478" | "20020149561" | "20020183014" | "20030108209" | "20030118197" | "20030119566" | "20040013279" | "20040105566" | "20040131211" | "20040132509" | "20040189151" | "20040207542" | "20040259513" |	US-PGPUB; USPAT; USOCR	OR	OFF	2018/03/19 10:43

		"20050046790" | "20050088530" | "20050160270" | "20050176459" | "20050184875" | "20050185813" | "20050207599" | "20050213432" | "20050232436" | "20050237685" | "20050244020" | "20050275714" | "20050286734" | "20060079291" | "20060093161" | "20060120546" | "20060121960" | "20060140439" | "20060158064" | "20060159297" | "20060171107" | "20060227984" | "20060286998" | "20070003098" | "20070015467" | "20070036370" | "20070080951" | "20070081679" | "20070098200" | "20070160253" | "20070249395" | "20070263893" | "20080008344" | "20080054862" | "20080106449" | "20080107300" | "20080129703" | "20080139254" | "20080170725" | "20080227490" | "20080239061" | "20080247562" | "20080267433" | "20090002626" | "20090028356" | "20090129620" | "20090226011" | "20090226017" | "20090226020" | "20090245557" | "20090288489" | "20090290730" | "20090323976" | "20100056227" | "20100061582" | "20100098269" | "20100150368" | "20100172519" | "20100178957" | "20100184487" | "20100246878" | "20100254562" | "20100310086" | "20100311462" | "20100322127" | "20100328033" | "20100329485" | "20110143819" | "20110158425" | "20110170718" | "20110180542" | "20110201301" | "20110237306" | "20110254616" | "20110267551").PN. OR ("20110280416" | "20110281617" | "20110293105" | "20110301729" | "20120008793" | "20120008807" | "20120010735" | "20120082329" | "20120130660" | "20120133213" | "20120182429" | "20120183163" | "20120237075" | "20120244917" | "20120249223" | "20120253236" | "20120289162" | "20120300956" | "20130100596" | "20130111346" | "20130136279" | "20130169352" | "20130169829" | "20130236043" | "20130242809" | "20130301860" | "20130316691" | "20130322670" | "20130324193" | "20130336507" | "20140003641" | "20140342783" | "20140378191" | "20150054779" | "20150065057" | "20150070083" | "20150078569" | "20150086047" | "20150141088" | "20150172588" | "20150181338" | "20150208153" | "20150256946" | "20160007109" | "20160086594" | "20160205233" | "20160261299" | "20160286296" | "2045404" | "5295193" | "5323468" | "6380923" | "6456721" | "6463157" |				

		"6950126" | "7231235" | "7437122" | "7442164" | "7555136" | "8521239" | "8526646" | "8886263" | "8918149" | "9020170").PN.				
S132	1	"9986325".pn.	US-PGPUB; USPAT; EPO; JPO	OR	ON	2018/08/31 15:04
S133	2	"9986325".pn.	US-PGPUB; USPAT; USOCR; EPO; JPO; DERWENT	OR	OFF	2018/08/31 16:02
S134	0	microphone with utteranc$3 with headphone and (mobile wireless pda $4phone) with (adhoc (ad adj hoc)) and earphone$1 and @ad<"20090303"	US-PGPUB; USPAT; USOCR; EPO; JPO; DERWENT	OR	OFF	2018/08/31 16:10
S135	1	microphone with utteranc$3 with headphone and (mobile wireless pda $4phone) with (adhoc (ad adj hoc)) and earphone$1	US-PGPUB; USPAT; USOCR; EPO; JPO; DERWENT	OR	OFF	2018/08/31 16:10
S136	1	microphone with utteranc$3 and headphone and (mobile wireless pda $4phone) with (adhoc (ad adj hoc)) and earphone$1	US-PGPUB; USPAT; USOCR; EPO; JPO; DERWENT	OR	OFF	2018/08/31 16:12
S137	31	microphone with utteranc$3 and headphone and earphone$1	US-PGPUB; USPAT; USOCR; EPO; JPO; DERWENT	OR	OFF	2018/08/31 16:12
S138	8	microphone with utteranc$3 and headphone and earphone$1.clm.	US-PGPUB; USPAT; USOCR; EPO; JPO; DERWENT	OR	OFF	2018/08/31 16:12
S139	7	S138 AND ((H04R2201/107 OR H04R5/033 OR H04R1/1008 OR H04R1/1016 OR H04R2460/13 OR H04M1/6066).CPC.)	US-PGPUB; USPAT; USOCR; EPO; JPO; DERWENT	OR	OFF	2018/08/31 16:14
S140	128	(mobile wireless $4phone) with (adhoc (ad adj hoc)) with (signal$3 rf frequency) with threshold and (mobile wireless pda $4phone) with (adhoc (ad adj hoc))	US-PGPUB; USPAT; USOCR; FPRS; EPO; JPO; DERWENT; IBM_TDB	OR	OFF	2018/08/31 16:23
S141	32	(mobile wireless $4phone) with (adhoc (ad adj hoc)) with (signal$3 rf frequency) with threshold and (mobile wireless pda $4phone) with (adhoc (ad adj hoc)) and @ad<"20090303"	US-PGPUB; USPAT; USOCR; FPRS; EPO; JPO; DERWENT; IBM_TDB	OR	OFF	2018/08/31 16:23
S142	0	microphone$1 and headphone$1 and (earphone$1 headset headphone) with acoutic$1 and (mobile wireless pda $4phone) with (adhoc (ad adj hoc))	US-PGPUB; USPAT; USOCR; EPO; JPO;	OR	OFF	2018/08/31 16:25

		and @ad<"20090303"	DERWENT			
S143	0	microphone$1 and headphone$1 and (earphone$1 headset headphone) with acoutic$1 and (mobile wireless pda $4phone) with (adhoc (ad adj hoc))	US-PGPUB; USPAT; USOCR; EPO; JPO; DERWENT	OR	OFF	2018/08/31 16:25
S144	0	microphone$1 and headphone$1 and (earphone$1 headset headphone) with acoutic$1 and (adhoc (ad adj hoc))	US-PGPUB; USPAT; USOCR; EPO; JPO; DERWENT	OR	OFF	2018/08/31 16:25
S145	2807	microphone$1 and headphone$1 and (adhoc (ad adj hoc))	US-PGPUB; USPAT; USOCR; EPO; JPO; DERWENT	OR	OFF	2018/08/31 16:26
S146	153	microphone$1 and headphone$1 and (earphone$1 headset headphone) and (mobile wireless pda $4phone) with (adhoc (ad adj hoc)) and @ad<"20090303"	US-PGPUB; USPAT; USOCR; EPO; JPO; DERWENT	OR	OFF	2018/08/31 16:27
S147	31	microphone$1 and headphone$1 and (earphone$1 headset headphone) and (mobile wireless pda $4phone) with (adhoc (ad adj hoc)) and (acoutic$1 transducer$1) and @ad<"20090303"	US-PGPUB; USPAT; USOCR; EPO; JPO; DERWENT	OR	OFF	2018/08/31 16:28
S148	782	(earphone headset) with (recharg$5 charg$5) with (battery power) and @ad<"20080101"	US-PGPUB; USPAT; EPO; JPO	OR	ON	2018/09/06 16:49
S149	313	(earphone$1 headset) with (recharg$5 charg$5) near3 battery with power$3 and @ad<"20080101"	US-PGPUB; USPAT; EPO; JPO	OR	ON	2018/09/06 16:50
S150	44	S149 AND ((H04M1/0258 OR H04M1/04 OR H04M1/0262 OR H04M1/0202 OR G06F1/3203 OR H02J7/0054 OR H02J2007/0096 OR H02J7/32).CPC.)	US-PGPUB; USPAT; EPO; JPO	OR	ON	2018/09/06 16:52
S151	351136	((cd near player) (audio near player) (music near player) mobile) with stor$3 (audio music sound song$1) and (earphone$1 headset headphone$1 (head near phone$1)) and (earphone$1 headset headphone$1 (head near phone$1)) with (acoustic transducer$1) and ((cd near player) (audio near player) (music near player) mobile) with (bluetooth adhoc (short near rang$3) (ad adj hoc)) and @ad<"20080101"	US-PGPUB; USPAT; EPO; JPO	OR	ON	2018/09/06 22:46
S152	351041	((cd near player) (audio near player) (music near player) mobile) with stor$3 (audio music song$1) and (earphone$1 headset headphone$1 (head near phone$1)) and (earphone$1 headset headphone$1 (head near phone$1)) with acoustic with transducer$1 and ((cd near player) (audio near player) (music near player) mobile) with (bluetooth adhoc (short near rang$3) (ad adj	US-PGPUB; USPAT; EPO; JPO	OR	ON	2018/09/06 22:48

		hoc)) and @ad<"20080101"				
S153	548914	((cd near player) (audio near player) (music near player) mobile) with stor$3 (audio music song$1) and (earphone$1 headset headphone$1 (head near phone$1)) and (earphone$1 headset headphone$1 (head near phone$1)) with acoustic with transducer$1 and ((cd near player) (audio near player) (music near player) mobile) with (bluetooth adhoc (short near rang$3) (ad adj hoc)) and @ad<"20080101"	US-PGPUB; USPAT; USOCR; FPRS; EPO; JPO; DERWENT; IBM_TDB	OR	ON	2018/09/06 22:48
S154	8	((cd near player) (audio near player) (music near player)) with stor$3 with (audio music song$1) and (earphone$1 headset headphone$1 (head near phone$1)) and (earphone$1 headset headphone$1 (head near phone$1)) with acoustic with transducer$1 and ((cd near player) (audio near player) (music near player) mobile) with (bluetooth adhoc (short near rang$3) (ad adj hoc)) and @ad<"20080101"	US-PGPUB; USPAT; USOCR; FPRS; EPO; JPO; DERWENT; IBM_TDB	OR	ON	2018/09/06 22:49
S155	24	((cd near player) (audio near player) (music near player) mobile) with stor$3 with (audio music song$1) and (earphone$1 headset headphone$1 (head near phone$1)) and acoustic with transducer$1 and (bluetooth adhoc (ad adj hoc)) and @ad<"20080101"	US-PGPUB; USPAT; USOCR; FPRS; EPO; JPO; DERWENT; IBM_TDB	OR	ON	2018/09/06 23:00
S156	2	(earphone$1 headset headphone$1 (head near phone$1) (ear near phone$1)) with antenna with ((cd near player) (audio near player) (music near player) mobile mp3) with (bluetooth adhoc (ad adj hoc)) and acoustic$1 and @ad<"20080101"	US-PGPUB; USPAT; USOCR; FPRS; EPO; JPO; DERWENT; IBM_TDB	OR	ON	2018/09/07 07:51
S157	27	(earphone$1 headset headphone$1 (head near phone$1) (ear near phone$1)) with antenna with ((cd near player) (audio near player) (music near player) mobile mp3) with (bluetooth adhoc (ad adj hoc)) and @ad<"20080101"	US-PGPUB; USPAT; USOCR; FPRS; EPO; JPO; DERWENT; IBM_TDB	OR	ON	2018/09/07 08:05
S158	8	(earphone$1 (ear near phone$1)) with antenna with ((cd near player) (audio near player) (music near player) mobile mp3) with (bluetooth adhoc (ad adj hoc)) and @ad<"20080101"	US-PGPUB; USPAT; USOCR; FPRS; EPO; JPO; DERWENT; IBM_TDB	OR	ON	2018/09/07 08:17
S159	118	(earphone$1 (ear near phone$1)) with ((cd near player) (audio near player) (music near player) mobile mp3) with (bluetooth adhoc (ad adj hoc)) and microphone and @ad<"20080101"	US-PGPUB; USPAT; USOCR; FPRS; EPO; JPO; DERWENT; IBM_TDB	OR	ON	2018/09/07 08:19

S160	26	(earphone$1 (ear near phone$1)) with ((cd near player) (audio near player) (music near player) mobile mp3) with (bluetooth adhoc (ad adj hoc)) and microphone with (headphone headset) and @ad<"20080101"	US-PGPUB; USPAT; USOCR; FPRS; EPO; JPO; DERWENT; IBM_TDB	OR	ON	2018/09/07 08:21
S161	1	(mobile wireless $4phone terminal) with antenna$1 with ((cd near player) (audio near player) (music near player) mp3) with (adhoc (ad adj hoc)) and (headphone headset)	US-PGPUB; USPAT; USOCR; EPO; JPO; DERWENT	OR	OFF	2018/09/07 09:10
S162	4	(mobile wireless $4phone terminal) with antenna$1 with ((cd near player) (audio near player) (music near player) mp3) with (adhoc (ad adj hoc) bluetooth (short near rang$3)) and (headphone headset) with microphone and (adhoc (ad adj hoc) bluetooth (short near rang$3)) and @ad<"20080303"	US-PGPUB; USPAT; USOCR; EPO; JPO; DERWENT	OR	OFF	2018/09/07 09:12
S163	1	(mobile wireless $4phone terminal handset) with antenna$1 with ((cd near player) (audio near player) (music near player) mp3) with (adhoc (ad adj hoc)) and (headphone headset)	US-PGPUB; USPAT; USOCR; EPO; JPO; DERWENT	OR	OFF	2018/09/07 09:23
S164	210	(mobile wireless $4phone terminal handset) with ((cd near player) (audio near player) (music near player) mp3 music song$1 multimedia) with (adhoc (ad adj hoc)) and (headphone headset)	US-PGPUB; USPAT; USOCR; EPO; JPO; DERWENT	OR	OFF	2018/09/07 09:26
S165	24	(mobile wireless $4phone terminal handset) with ((cd near player) (audio near player) (music near player) mp3 music song$1 multimedia) with (adhoc (ad adj hoc)) and (headphone headset) and @ad<"20080303"	US-PGPUB; USPAT; USOCR; EPO; JPO; DERWENT	OR	OFF	2018/09/07 09:26
S166	0	(server computer center$1 central$3) with (software firmware) with upgrat$3 near8 (headphone headset) and @ad<"20080303"	US-PGPUB; USPAT; USOCR; EPO; JPO; DERWENT	OR	OFF	2018/09/07 11:32
S167	0	(server computer center$1 central$3) with upgrat$3 near8 (headphone headset) and @ad<"20080303"	US-PGPUB; USPAT; USOCR; EPO; JPO; DERWENT	OR	OFF	2018/09/07 11:34
S168	15	(server computer center$1 central$3) with (upgrad$3 updat$3) near8 (headphone headset) and @ad<"20080303"	US-PGPUB; USPAT; USOCR; EPO; JPO; DERWENT	OR	OFF	2018/09/07 11:34
S169	0	(earphone$1 (ear near phone$1)) with curve$3 with hang$3 with bar$1 and (headphone headset) and elongat$3 and @ad<"20080101"	US-PGPUB; USPAT; USOCR; FPRS; EPO; JPO; DERWENT; IBM_TDB	OR	ON	2018/09/07 11:45

S170	0	(earphone$1 (ear near phone$1)) with curve$3 with hang$3 with bar$1 and (headphone headset) and @ad<"20080101"	US-PGPUB; USPAT; USOCR; FPRS; EPO; JPO; DERWENT; IBM_TDB	OR	ON	2018/09/07 11:46
S171	0	(earphone$1 (ear near phone$1)) and curve$3 with hang$3 with bar$1 and (headphone headset) and @ad<"20080101"	US-PGPUB; USPAT; USOCR; FPRS; EPO; JPO; DERWENT; IBM_TDB	OR	ON	2018/09/07 11:46
S172	3	curve$3 with hang$3 with bar$1 and (headphone headset) and @ad<"20080101"	US-PGPUB; USPAT; USOCR; FPRS; EPO; JPO; DERWENT; IBM_TDB	OR	ON	2018/09/07 11:47
S173	72	curve$3 with bar$1 and (headphone headset) and @ad<"20080101"	US-PGPUB; USPAT; USOCR; FPRS; EPO; JPO; DERWENT; IBM_TDB	OR	ON	2018/09/07 11:47
S174	282	(headphone headset) with elongat$3 and @ad<"20080101"	US-PGPUB; USPAT; USOCR; FPRS; EPO; JPO; DERWENT; IBM_TDB	OR	ON	2018/09/07 12:07
S175	19	(headphone headset) with elongat$3 and transducer with acoustic and @ad<"20080101"	US-PGPUB; USPAT; USOCR; FPRS; EPO; JPO; DERWENT; IBM_TDB	OR	ON	2018/09/07 12:08
S176	160	(earphone$1 (ear near phone$1)) with elongat$3 and @ad<"20080101"	US-PGPUB; USPAT; USOCR; FPRS; EPO; JPO; DERWENT; IBM_TDB	OR	ON	2018/09/07 12:13
S177	31	(earphone$1 (ear near phone$1)) with elongat$3 and transducer and @ad<"20080101"	US-PGPUB; USPAT; USOCR; FPRS; EPO; JPO; DERWENT; IBM_TDB	OR	ON	2018/09/07 12:13
S178	7	S177 AND ((H04R5/033 OR H04R1/1008 OR H04R1/105).CPC.)	US-PGPUB; USPAT; USOCR; FPRS; EPO; JPO;	OR	ON	2018/09/07 12:21

			DERWENT; IBM_TDB			
S179	3	S165 AND ((H04W92/18 OR G06F3/167).CPC.)	US-PGPUB; USPAT; USOCR; EPO; JPO; DERWENT	OR	OFF	2018/09/07 12:23
S180	2	"9438987".pn.	US-PGPUB; USPAT; USOCR; EPO; JPO; DERWENT	OR	OFF	2019/04/04 09:54
S181	2	"9497535".pn.	US-PGPUB; USPAT; USOCR; EPO; JPO; DERWENT	OR	OFF	2019/04/04 09:56
S182	3	"9729959".pn.	US-PGPUB; USPAT; USOCR; EPO; JPO; DERWENT	OR	OFF	2019/04/04 09:57
S183	2	"9986325".pn.	US-PGPUB; USPAT; USOCR; EPO; JPO; DERWENT	OR	OFF	2019/04/04 09:58
S184	6	"10206025".pn.	US-PGPUB; USPAT; USOCR; EPO; JPO; DERWENT	OR	OFF	2019/04/04 09:59
S185	23	(earphone earcup headset headphone earbud) with acoustic$1 with transducer$3 and (earphone earcup headset headphone earbud) with antenna$1 with wireless and play$3 with (audio music song$1)	US-PGPUB; USPAT; USOCR	OR	ON	2019/04/04 10:15
S186	17	(earphone earcup headset headphone earbud) with acoustic$1 and automat$4 with play$3 with (song music audio) and wireless with network	US-PGPUB; USPAT; USOCR	OR	ON	2019/04/04 17:54
S188	2668	(earphone earcup headset headphone earbud) and automati$4 with play$3 with (song$1 music audio digital) and wireless	US-PGPUB; USPAT; USOCR	OR	ON	2019/04/04 18:00
S189	201	(earphone earcup headset headphone earbud) same automati$4 with play$3 with (song$1 music audio digital) and wireless	US-PGPUB; USPAT; USOCR	OR	ON	2019/04/04 18:01
S190	24	(earphone earcup headset headphone earbud) same automati$4 with play$3 with (song$1 music audio digital) and wireless and @ad< "20090202"	US-PGPUB; USPAT; USOCR	OR	ON	2019/04/05 10:07
S191	11	S190 AND ((H04R5/033 OR H04R1/1016 OR H04L2012/2841 OR H04M1/6066 OR H04M1/7253 OR H04N1/00307).CPC.)	US-PGPUB; USPAT; USOCR	OR	ON	2019/04/05 10:10

S192	8978	(earphone earcup headset headphone earbud) same microphone$1 and (voice speak$3 utteran$3) with control$3 and @ad<"20090202"	US-PGPUB; USPAT; USOCR	OR	ON	2019/04/05 10:51
S193	3583	(earphone earcup headset headphone earbud) same microphone$1 same (voice speak$3 utteran$3) with control$3 and @ad<"20090202"	US-PGPUB; USPAT; USOCR	OR	ON	2019/04/05 10:52
S194	3656	(earphone earcup headset headphone earbud) with microphone$1 same (voice speak$3 utteran$3) with control$3 and @ad<"20090202"	US-PGPUB; USPAT; USOCR; FPRS; EPO; JPO; DERWENT; IBM_TDB	OR	ON	2019/04/05 10:52
S195	564	(earphone earcup headset headphone earbud) with microphone$1 with (voice speak$3 utteran$3) near4 control$3 and @ad<"20090202"	US-PGPUB; USPAT; USOCR; FPRS; EPO; JPO; DERWENT; IBM_TDB	OR	ON	2019/04/05 10:53
S196	140	S195 and 455/$.ccls.	US-PGPUB; USPAT; USOCR; FPRS; EPO; JPO; DERWENT; IBM_TDB	OR	ON	2019/04/05 10:53
S197	41	(earphone earcup headset headphone) and earbud and microphone$1 with (voice speak$3 utteran$3) near4 control$3 and @ad<"20090202"	US-PGPUB; USPAT; USOCR; FPRS; EPO; JPO; DERWENT; IBM_TDB	OR	ON	2019/04/05 11:34
S198	5	(earphone earcup headset headphone) and hanger near bar and @ad<"20090202"	US-PGPUB; USPAT; USOCR; FPRS; EPO; JPO; DERWENT; IBM_TDB	OR	ON	2019/04/05 12:06
S199	34	(earphone earcup headset headphone earbud) with acoustic$1 and firmware with updat$3 and @ad<"20090101"	US-PGPUB; USPAT; USOCR	OR	ON	2019/04/05 12:45
S200	27	(earphone earcup headset headphone earbud) with acoustic$1 and stor$3 with network with identi$4 and @ad<"20090101"	US-PGPUB; USPAT; USOCR	OR	ON	2019/04/05 13:05
S201	2965976	(earphone earcup headset headphone earbud) and memory with stor$3 with network neae2 identi$4 and @ad<"20090101"	US-PGPUB; USPAT; USOCR	OR	ON	2019/04/05 13:07
S202	50	(earphone earcup headset headphone earbud) and memory with stor$3 with network near2 identi$4 and @ad<"20090101"	US-PGPUB; USPAT; USOCR	OR	ON	2019/04/05 13:10
S203	8	(earphone earcup headset headphone earbud) and memory with stor$3 with	US-PGPUB; USPAT;	OR	ON	2019/04/05 13:11

		(plurality multiple multi) with network near2 identi$4 and @ad<"20090101"	USOCR			
S204	21	(earphone earcup headset headphone earbud) and (memory stor$3) with (plurality multiple multi) with network near2 identi$4 and @ad<"20090101"	US-PGPUB; USPAT; USOCR	OR	ON	2019/04/05 13:13
S205	350	(earphone earcup headset headphone earbud) and stor$3 with network near2 identi$4 and @ad<"20090101"	US-PGPUB; USPAT; USOCR	OR	ON	2019/04/05 13:25
S206	132	(earphone earcup headset headphone earbud) and stor$3 with network near2 identi$4 and @ad<"20090101" and 455/$.ccls.	US-PGPUB; USPAT; USOCR	OR	ON	2019/04/05 13:25
S207	0	(earphone earcup headset headphone earbud) same stor$3 with network near2 identi$4 and @ad<"20090101" and 455/$.ccls.	US-PGPUB; USPAT; USOCR	OR	ON	2019/04/05 13:27
S208	27	(earphone earcup headset headphone earbud) with acoustic$1 and automat$4 with play$3 with (song music audio) and wireless	US-PGPUB; USPAT; USOCR	OR	ON	2019/04/05 14:05
S209	9	S208 AND ((H04R1/1008 OR H04R1/1016 OR H04R1/105 OR H04R29/004 OR G10K2210/1081).CPC.)	US-PGPUB; USPAT; USOCR	OR	ON	2019/04/05 14:06
S210	7	(earphone earcup headset headphone earbud) with acoustic$1 and automat$4 with play$3 with (song music audio) and (plurality multiple second) near6 network	US-PGPUB; USPAT; USOCR	OR	ON	2019/05/25 10:38
S211	4	S210 AND ((H04H20/83 OR G06F3/167 OR H04R2225/55).CPC.)	US-PGPUB; USPAT; USOCR	OR	ON	2019/05/25 11:13
S212	0	(earphone earcup headset headphone earbud) with acoustic$1 and (earphone earcup headset headphone earbud) with automat$4 with play$3 and (plurality multiple second) near6 network.clm.	US-PGPUB; USPAT; USOCR	OR	ON	2019/05/25 11:14
S213	6	(earphone earcup headset headphone earbud) with acoustic$1 and (earphone earcup headset headphone earbud) with automat$4 with play$3 and (plurality multiple second) near6 network	US-PGPUB; USPAT; USOCR	OR	ON	2019/05/25 16:52
S214	195	(earphone earcup headset headphone earbud) and (earphone earcup headset headphone earbud) with automat$4 with play$3 and (plurality multiple second) near6 network	US-PGPUB; USPAT; USOCR	OR	ON	2019/05/25 16:53
S215	22	(earphone earcup headset headphone earbud) and (earphone earcup headset headphone earbud) with automat$4 with play$3 and (plurality multiple second) near6 network.clm.	US-PGPUB; USPAT; USOCR	OR	ON	2019/05/25 16:54
S216	108	("20010003712" | "20020030649" | "20020044152" | "20020154070" | "20030016253" | "20030046401" | "20030067536" | "20040102957" |	US-PGPUB; USPAT; USOCR	OR	OFF	2019/05/25 16:59

		"20040113867" | "20040193413" | "20040210852" | "20040267527" | "20050114140" | "20050237296" | "20050245292" | "20050261890" | "20060010368" | "20060028400" | "20060061551" | "20060074624" | "20060109237" | "20060178085" | "20060221266" | "20070009125" | "20070030174" | "20070103388" | "20070180979" | "20070220108" | "20070265495" | "20080052643" | "20080055194" | "20080084992" | "20080120141" | "20080144854" | "20080180640" | "20080200774" | "20080239080" | "20090002640" | "20090079839" | "20090093304" | "20090099836" | "20090117890" | "20090182562" | "20090204410" | "20090213071" | "20090240488" | "20090251409" | "20100106497" | "20100117930" | "20100119052" | "20100128626" | "20100141554" | "20100156812" | "20100164990" | "20100169073" | "20100182137" | "20100204981" | "20100235161" | "20100245585" | "20100250231" | "20100302137" | "20100309295" | "20110001699" | "20110092825" | "20110134910" | "20110187640" | "20110238405" | "20120068914" | "20120075177" | "20120089392" | "20120110456" | "20120236025" | "20120287284" | "20130174205" | "20130231937" | "20130288753" | "20130289971" | "20130300649" | "20140223299" | "20140235169" | "20140368412" | "20150072672" | "20150279354" | "5005213" | "5208449" | "5594469" | "5698834" | "6084556" | "6198462" | "6313864" | "6369952" | "6408257" | "6532446" | "6538676" | "6778906" | "6965862" | "7501995").PN. OR ("8184983" | "8327295" | "8838075" | "8855719" | "8862186" | "8929954" | "9122307" | "9235262" | "9294607" | "9316827" | "9369760").PN.				
S217	7	"10206025".pn.	US-PGPUB; USPAT; USOCR; FPRS; EPO; JPO; DERWENT; IBM_TDB	OR	OFF	2019/06/20 18:18
S218	0	(earphone earcup headset headphone earbud (head near phone) (head near set)) with acoustic$1 and (earphone earcup headset headphone earbud (head near phone) (head near set)) with antenna$1 with revei$3 with (audio music media) and @ad<"20101010"	US-PGPUB; USPAT; USOCR	OR	ON	2019/06/21 10:44
S219	182	(earphone earcup headset headphone	US-PGPUB;	OR	ON	2019/06/21

		earbud (head near phone) (head near set)) with acoustic$1 and (earphone earcup headset headphone earbud (head near phone) (head near set)) with antenna$1 and @ad<"20101010"	USPAT; USOCR			10:44
S220	39	(earphone earcup headset headphone earbud (head near phone) (head near set)) with acoustic$1 and (earphone earcup headset headphone earbud (head near phone) (head near set)) with antenna$1 and wireless with (audio music multimedia) and @ad<"20101010"	US-PGPUB; USPAT; USOCR	OR	ON	2019/06/21 10:49
S221	5	"20040063459"	US-PGPUB; USPAT; USOCR; FPRS; EPO; JPO; DERWENT; IBM_TDB	OR	OFF	2019/06/21 12:44
S222	2	(earphone earcup headset headphone earbud (head near phone) (head near set)) with acoustic$1 and (earphone earcup headset headphone earbud (head near phone) (head near set)) with antenna$1 and request$3 with (connect$3 communicat$3) with server$1 and @ad<"20101010"	US-PGPUB; USPAT; USOCR	OR	ON	2019/06/21 12:50
S223	4	(earphone earcup headset headphone earbud (head near phone) (head near set)) with (transduc$3 acoustic$1) and (earphone earcup headset headphone earbud (head near phone) (head near set)) with antenna$1 and (earphone earcup headset headphone earbud (head near phone) (head near set)) with request$3 with (server$1 (base near station)) and @ad<"20101010"	US-PGPUB; USPAT; USOCR	OR	ON	2019/06/21 12:53
S224	14	(earphone earcup headset headphone earbud (head near phone) (head near set)) with antenna$1 and (earphone earcup headset headphone earbud (head near phone) (head near set)) with request$3 with (server$1 (base near station)) and @ad<"20101010"	US-PGPUB; USPAT; USOCR	OR	ON	2019/06/24 10:45
S225	9	S224 AND ((H04M1/6066 OR H04M1/2535 OR H04M1/72558 OR H04R2201/107 OR H04R25/554 OR H04R3/00 OR H04R5/033).CPC.)	US-PGPUB; USPAT; USOCR	OR	ON	2019/06/24 10:48

8/29/2019 12:39:26 PM
C:\Users\kdoan\Documents\EAST\Workspaces\12936488.wsp

UNITED STATES PATENT AND TRADEMARK OFFICE

UNITED STATES DEPARTMENT OF COMMERCE
United States Patent and Trademark Office
Address: COMMISSIONER FOR PATENTS
P.O. Box 1450
Alexandria, Virginia 22313-1450
www.uspto.gov

APPLICATION NO.	FILING DATE	FIRST NAMED INVENTOR	ATTORNEY DOCKET NO.	CONFIRMATION NO.
16/375,879	04/05/2019	Michael J. Koss	080188PCTUSCON10	1056

26285 7590 08/26/2019

K&L GATES LLP-Pittsburgh
210 SIXTH AVENUE
PITTSBURGH, PA 15222-2613

EXAMINER	
DOAN, KIET M	

ART UNIT	PAPER NUMBER
2641	

NOTIFICATION DATE	DELIVERY MODE
08/26/2019	ELECTRONIC

Please find below and/or attached an Office communication concerning this application or proceeding.

The time period for reply, if any, is set in the attached communication.

Notice of the Office communication was sent electronically on above-indicated "Notification Date" to the following e-mail address(es):

USpatentmail@klgates.com

Applicant-Initiated Interview Summary	**Application No.** 16/375,879	**Applicant(s)** Koss et al.	
	Examiner KIET M DOAN	**Art Unit** 2641	**AIA (FITF) Status** No

All participants (applicant, applicants representative, PTO personnel):

(1) KIET M. DOAN. (3) _____.

(2) Mark Knedeisen. (4) _____.

Date of Interview: 21 August 2019.

Type: ☑ Telephonic ☐ Video Conference
☐ Personal [copy given to: ☐ applicant ☐ applicant's representative]

Exhibit shown or demonstration conducted: ☐ Yes ☑ No.
If Yes, brief description: _____.

Issues Discussed ☐101 ☐112 ☐102 ☐103 ☑Others
(For each of the checked box(es) above, please describe below the issue and detailed description of the discussion)

Claim(s) discussed: 2 and 8.

Identification of prior art discussed: N/A.

Substance of Interview
(For each issue discussed, provide a detailed description and indicate if agreement was reached. Some topics may include: identification or clarification of a reference or a portion thereof, claim interpretation, proposed amendments, arguments of any applied references etc...)

The examiner discussed with Applicant Representative Mark Knedeisen regarding the proposed amendment, wherein the examiner accept the proposed amendment and request the Terminal Disclaimer file according to the Double patenting rejection on 06/28/2019 in order to place Application for condition of allowance..

Applicant recordation instructions: The formal written reply to the last Office action must include the substance of the interview. (See MPEP section 713.04). If a reply to the last Office action has already been filed, applicant is given a non-extendable period of the longer of one month or thirty days from this interview date, or the mailing date of this interview summary form, whichever is later, to file a statement of the substance of the interview.

Examiner recordation instructions: Examiners must summarize the substance of any interview of record. A complete and proper recordation of the substance of an interview should include the items listed in MPEP 713.04 for complete and proper recordation including the identification of the general thrust of each argument or issue discussed, a general indication of any other pertinent matters discussed regarding patentability and the general results or outcome of the interview, to include an indication as to whether or not agreement was reached on the issues raised.

☐ Attachment

/KIET M DOAN/ Primary Examiner, Art Unit 2641	

Summary of Record of Interview Requirements

Manual of Patent Examining Procedure (MPEP), Section 713.04, Substance of Interview Must be Made of Record
A complete written statement as to the substance of any face-to-face, video conference, or telephone interview with regard to an application must be made of record in the application whether or not an agreement with the examiner was reached at the interview.

Title 37 Code of Federal Regulations (CFR) 1.133 Interviews
Paragraph (b)

In every instance where reconsideration is requested in view of an interview with an examiner, a complete written statement of the reasons presented at the interview as warranting favorable action must be filed by the applicant. An interview does not remove the necessity for reply to Office action as specified in §§ 1.111, 1.135. (35 U.S.C. 132)

37 CFR §1.2 Business to be transacted in writing.
All business with the Patent or Trademark Office should be transacted in writing. The personal attendance of applicants or their attorneys or agents at the Patent and Trademark Office is unnecessary. The action of the Patent and Trademark Office will be based exclusively on the written record in the Office. No attention will be paid to any alleged oral promise, stipulation, or understanding in relation to which there is disagreement or doubt.

The action of the Patent and Trademark Office cannot be based exclusively on the written record in the Office if that record is itself incomplete through the failure to record the substance of interviews.

It is the responsibility of the applicant or the attorney or agent to make the substance of an interview of record in the application file, unless the examiner indicates he or she will do so. It is the examiners responsibility to see that such a record is made and to correct material inaccuracies which bear directly on the question of patentability.

Examiners must complete an Interview Summary Form for each interview held where a matter of substance has been discussed during the interview by checking the appropriate boxes and filling in the blanks. Discussions regarding only procedural matters, directed solely to restriction requirements for which interview recordation is otherwise provided for in Section 812.01 of the Manual of Patent Examining Procedure, or pointing out typographical errors or unreadable script in Office actions or the like, are excluded from the interview recordation procedures below. Where the substance of an interview is completely recorded in an Examiners Amendment, no separate Interview Summary Record is required.

The Interview Summary Form shall be given an appropriate Paper No., placed in the right hand portion of the file, and listed on the "Contents" section of the file wrapper. In a personal interview, a duplicate of the Form is given to the applicant (or attorney or agent) at the conclusion of the interview. In the case of a telephone or video-conference interview, the copy is mailed to the applicants correspondence address either with or prior to the next official communication. If additional correspondence from the examiner is not likely before an allowance or if other circumstances dictate, the Form should be mailed promptly after the interview rather than with the next official communication.

The Form provides for recordation of the following information:
- Application Number (Series Code and Serial Number)
- Name of applicant
- Name of examiner
- Date of interview
- Type of interview (telephonic, video-conference, or personal)
- Name of participant(s) (applicant, attorney or agent, examiner, other PTO personnel, etc.)
- An indication whether or not an exhibit was shown or a demonstration conducted
- An identification of the specific prior art discussed
- An indication whether an agreement was reached and if so, a description of the general nature of the agreement (may be by attachment of a copy of amendments or claims agreed as being allowable). Note: Agreement as to allowability is tentative and does not restrict further action by the examiner to the contrary.
- The signature of the examiner who conducted the interview (if Form is not an attachment to a signed Office action)

It is desirable that the examiner orally remind the applicant of his or her obligation to record the substance of the interview of each case. It should be noted, however, that the Interview Summary Form will not normally be considered a complete and proper recordation of the interview unless it includes, or is supplemented by the applicant or the examiner to include, all of the applicable items required below concerning the substance of the interview.

A complete and proper recordation of the substance of any interview should include at least the following applicable items:
1) A brief description of the nature of any exhibit shown or any demonstration conducted,-
2) an identification of the claims discussed,
3) an identification of the specific prior art discussed,
4) an identification of the principal proposed amendments of a substantive nature discussed, unless these are already described on the Interview Summary Form completed by the Examiner,
5) a brief identification of the general thrust of the principal arguments presented to the examiner,
(The identification of arguments need not be lengthy or elaborate. A verbatim or highly detailed description of the arguments is not required. The identification of the arguments is sufficient if the general nature or thrust of the principal arguments made to the examiner can be understood in the context of the application file. Of course, the applicant may desire to emphasize and fully describe those arguments which he or she feels were or might be persuasive to the examiner.)
6) a general indication of any other pertinent matters discussed, and
7) if appropriate, the general results or outcome of the interview unless already described in the Interview Summary Form completed by the examiner.

Examiners are expected to carefully review the applicants record of the substance of an interview. If the record is not complete and accurate, the examiner will give the applicant an extendable one month time period to correct the record.

Examiner to Check for Accuracy

If the claims are allowable for other reasons of record, the examiner should send a letter setting forth the examiners version of the statement attributed to him or her. If the record is complete and accurate, the examiner should place the indication, Interview Record OK on the paper recording the substance of the interview along with the date and the examiners initials.

IN THE UNITED STATES PATENT AND TRADEMARK OFFICE

Applicant:	Koss Corporation	**Examiner:**	Doan, Kiet M.
Inventor(s):	Michael J. Koss, et al.	**Art Unit:**	2641
Application No.:	16/375,879	**Atty. Docket No**.	080188PCTUSCON10
Filing Date:	April 5, 2019	**Conf. No.:**	1056

Title: SYSTEM WITH WIRELESS EARPHONES

AMENDMENT

K&L Gates, LLP
Pittsburgh, PA 15222
August 22, 2019

VIA EFS (WEB)

Mail Stop Amendment
Commissioner for Patents
Box 1450
Alexandria, VA 22313-1450

Dear Commissioner:

In response to the Office Action mailed June 28, 2019 for the above-referenced application ("Subject Application"), Applicant responds as follows, wherein:

Amendments to the Claims begin on page 2; and

Remarks begin on page 16.

Amendments to the Claims

Please amend the claims as follows. The following is a complete listing of the claims that replaces all previous versions.

1. (Canceled)

2. (Currently Amended) A headphone assembly comprising:

first and second earphones, wherein each of the first and second earphones comprises an acoustic transducer; and

an antenna for receiving wireless signals from a mobile, digital audio player via one or more ad hoc wireless communication links;

a wireless communication circuit connected to the antenna, wherein the wireless communication circuit is for receiving and transmitting wireless signals to and from the headphone assembly;

a processor;

a memory for storing firmware that is executed by the processor;

a rechargeable battery for powering the headphone assembly; and

a microphone for picking up utterances by a user of the headphone assembly; and

wherein the headphone assembly is configured to play, by the first and second earphones, digital audio content transmitted by the mobile, digital audio player via the one or more ad hoc wireless communication links; ~~and~~

wherein the processor is configured to, upon activation of a user-control of the headphone assembly, initiate transmission of a request to a remote, network-connected server that is in wireless communication with the mobile, digital audio player; and

wherein the headphone assembly is for receiving firmware upgrades transmitted from the remote, network-connected server.

3. (Previously Presented) The headphone assembly of claim 2, wherein:

in a first audio play mode, the first and second earphones play audio content stored on a mobile, digital audio player and transmitted to the headphone assembly from the mobile, digital audio player via the one or more ad hoc wireless communication links; and

in a second audio play mode, the earphones play audio content streamed from the remote, network-connected server.

4. (Previously Presented) The headphone assembly of claim 2, wherein the processor is for:
processing audible utterances by the user picked up by the microphone in response to activation of the microphone by the user; and
transmitting a communication based on the audible utterances via the one or more ad hoc wireless communication links.

5. (Previously Presented) The headphone assembly of claim 3, wherein the processor is for:
processing audible utterances by the user picked up by the microphone in response to activation of the microphone by the user; and
transmitting a communication based on the audible utterances via the one or more ad hoc wireless communication links.

6. (Previously Presented) The headphone assembly of claim 2, wherein upon activation of the microphone by the user, data are transmitted about the headphone assembly to a remote device.

7. (Previously Presented) The headphone assembly of claim 2, wherein:
the mobile, digital audio player is a first digital audio source;
the headphone assembly transitions to play digital audio content received wirelessly from a second digital audio source via a second wireless communication link based on, at least, a signal strength level for the second wireless communication link, wherein the second digital audio source is different from the first digital audio source.

8. (Currently Amended) ~~The~~ A headphone assembly comprising ~~of claim 3, wherein~~:
first and second earphones, wherein each of the first and second earphones comprises an acoustic transducer; and

an antenna for receiving wireless signals from a mobile, digital audio player via one or more ad hoc wireless communication link, wherein the mobile, digital audio player is a first digital audio source;

a wireless communication circuit connected to the antenna, wherein the wireless communication circuit is for receiving and transmitting wireless signals to and from the headphone assembly;

a processor;

a rechargeable battery for powering the headphone assembly; and

a microphone for picking up utterances by a user of the headphone assembly; and

wherein the headphone assembly is configured to play, by the first and second earphones, digital audio content transmitted by the mobile, digital audio player via the one or more ad hoc wireless communication links;

wherein the processor is configured to, upon activation of a user-control of the headphone assembly, initiate transmission of a request to a remote, network-connected server that is in wireless communication with the mobile, digital audio player; and

wherein the headphone assembly transitions to play digital audio content received wirelessly from a second digital audio source via a second wireless communication link based on, at least, a signal strength level for the second wireless communication link, wherein the second digital audio source is different from the first digital audio source.

9. (Previously Presented) The headphone assembly of claim 4, wherein:

the mobile, digital audio player is a first digital audio source;

the headphone assembly transitions to play digital audio content received wirelessly from a second digital audio source via a second wireless communication link based on, at least, a signal strength level for the second wireless communication link, wherein the second digital audio source is different from the first digital audio source.

10. (Previously Presented) The headphone assembly of claim 5, wherein:

the mobile, digital audio player is a first digital audio source;

the headphone assembly transitions to play digital audio content received wirelessly from a second digital audio source via a second wireless communication link based on, at least, a

signal strength level for the second wireless communication link, wherein the second digital audio source is different from the first digital audio source.

11. (Currently Amended) The headphone assembly of claim 2, wherein the headphone assembly is for receiving firmware upgrades wirelessly ~~transmitted from the remote, network-connected server~~.

12. (Currently Amended) The headphone assembly of claim [[3]] 2, wherein:
the wireless communication circuit is located in the first earphone; and
the headphone assembly further comprises a connection wire between the first and second earphones to carry the received digital audio content from the first earphone to the second earphone.

13. (Currently Amended) The headphone assembly of claim [[2]] 8, wherein:
in a first audio play mode, the first and second earphones play audio content stored on the mobile, digital audio player and transmitted to the headphone assembly from the mobile, digital audio player via the one or more ad hoc wireless communication links; and
in a second audio play mode, the earphones play audio content streamed from the remote, network-connected server.

14. (Previously Presented) The headphone assembly of claim 12, wherein the processor is for:
processing audible utterances by the user picked up by the microphone in response to activation of the microphone by the user; and
transmitting a communication based on the audible utterances via the one or more ad hoc wireless communication links.

15. (Previously Presented) The headphone assembly of claim 13, wherein the processor is for:
processing audible utterances by the user picked up by the microphone in response to activation of the microphone by the user; and

transmitting a communication based on the audible utterances via the one or more ad hoc wireless communication links.

16. (Currently Amended) The headphone assembly of claim [[2]] 8, wherein upon activation of the microphone by the user, data are transmitted about the headphone assembly to a remote device.

17. (Previously Presented) The headphone assembly of claim 12, wherein:
the mobile, digital audio player is a first digital audio source;
the headphone assembly transitions to play digital audio content received wirelessly from a second digital audio source via a second wireless communication link based on, at least, a signal strength level for the second wireless communication link, wherein the second digital audio source is different from the first digital audio source.

18. (Canceled)

19. (Previously Presented) The headphone assembly of claim 14, wherein:
the mobile, digital audio player is a first digital audio source;
the headphone assembly transitions to play digital audio content received wirelessly from a second digital audio source via a second wireless communication link based on, at least, a signal strength level for the second wireless communication link, wherein the second digital audio source is different from the first digital audio source.

20. (Canceled)

21. (Previously Presented) The headphone assembly of claim 12, wherein the headphone assembly further comprises a headband, and wherein the headband carries the connection wire.

22. (Previously Presented) The headphone assembly of claim 21, wherein:

in a first audio play mode, the first and second earphones play audio content stored on the mobile, digital audio player and transmitted to the headphone assembly from the mobile, digital audio player via the one or more ad hoc wireless communication links; and

in a second audio play mode, the earphones play audio content streamed from the remote, network-connected server.

23. (Previously Presented) The headphone assembly of claim 21, wherein the processor is for:

processing audible utterances by the user picked up by the microphone in response to activation of the microphone by the user; and

transmitting a communication based on the audible utterances via the one or more ad hoc wireless communication links.

24. (Previously Presented) The headphone assembly of claim 22, wherein the processor is for:

processing audible utterances by the user picked up by the microphone in response to activation of the microphone by the user; and

transmitting a communication based on the audible utterances via the one or more ad hoc wireless communication links.

25. (Previously Presented) The headphone assembly of claim 21, wherein upon activation of the microphone by the user, data are transmitted about the headphone assembly to a remote device.

26. (Previously Presented) The headphone assembly of claim 21, wherein:

the mobile, digital audio player is a first digital audio source;

the headphone assembly transitions to play digital audio content received wirelessly from a second digital audio source via a second wireless communication link based on, at least, a signal strength level for the second wireless communication link, wherein the second digital audio source is different from the first digital audio source.

27. (Previously Presented) The headphone assembly of claim 22, wherein:

the mobile, digital audio player is a first digital audio source;

the headphone assembly transitions to play digital audio content received wirelessly from a second digital audio source via a second wireless communication link based on, at least, a signal strength level for the second wireless communication link, wherein the second digital audio source is different from the first digital audio source.

28. (Previously Presented) The headphone assembly of claim 23, wherein:

the mobile, digital audio player is a first digital audio source;

the headphone assembly transitions to play digital audio content received wirelessly from a second digital audio source via a second wireless communication link based on, at least, a signal strength level for the second wireless communication link, wherein the second digital audio source is different from the first digital audio source.

29. (Previously Presented) The headphone assembly of claim 24, wherein:

the mobile, digital audio player is a first digital audio source;

the headphone assembly transitions to play digital audio content received wirelessly from a second digital audio source via a second wireless communication link based on, at least, a signal strength level for the second wireless communication link, wherein the second digital audio source is different from the first digital audio source.

30. (Previously Presented) The headphone assembly of claim 12, wherein each of the first and second earphones further comprises:

an adjustable, curved hanger bar that sits upon an upper external curvature of the user's ear, behind an upper portion of an auricula of the user's ear, when the headphone assembly is worn by the user; and

a body connected to the hanger bar, wherein the earphone extends from the body into the user's ear when the headphone assembly is worn by the user.

31. (Previously Presented) The headphone assembly of claim 30, wherein:

in a first audio play mode, the first and second earphones play audio content stored on the mobile, digital audio player and transmitted to the headphone assembly from the mobile, digital audio player via the one or more ad hoc wireless communication links; and

in a second audio play mode, the earphones play audio content streamed from the remote, network-connected server.

32. (Previously Presented) The headphone assembly of claim 30, wherein the processor is for:

processing audible utterances by the user picked up by the microphone in response to activation of the microphone by the user; and

transmitting a communication based on the audible utterances via the one or more ad hoc wireless communication links.

33. (Previously Presented) The headphone assembly of claim 31, wherein:

processing audible utterances by the user picked up by the microphone in response to activation of the microphone by the user; and

transmitting a communication based on the audible utterances via the one or more ad hoc wireless communication links.

34. (Previously Presented) The headphone assembly of claim 30, wherein upon activation of the microphone by the user, data are transmitted about the headphone assembly to a remote device.

35. (Previously Presented) The headphone assembly of claim 30, wherein:

the mobile, digital audio player is a first digital audio source;

the headphone assembly transitions to play digital audio content received wirelessly from a second digital audio source via a second wireless communication link based on, at least, a signal strength level for the second wireless communication link, wherein the second digital audio source is different from the first digital audio source.

36. (Previously Presented) The headphone assembly of claim 31, wherein:

the mobile, digital audio player is a first digital audio source;

the headphone assembly transitions to play digital audio content received wirelessly from a second digital audio source via a second wireless communication link based on, at least, a signal strength level for the second wireless communication link, wherein the second digital audio source is different from the first digital audio source.

37. (Previously Presented) The headphone assembly of claim 32, wherein:

the mobile, digital audio player is a first digital audio source;

the headphone assembly transitions to play digital audio content received wirelessly from a second digital audio source via a second wireless communication link based on, at least, a signal strength level for the second wireless communication link, wherein the second digital audio source is different from the first digital audio source.

38. (Previously Presented) The headphone assembly of claim 33, wherein:

the mobile, digital audio player is a first digital audio source;

the headphone assembly transitions to play digital audio content received wirelessly from a second digital audio source via a second wireless communication link based on, at least, a signal strength level for the second wireless communication link, wherein the second digital audio source is different from the first digital audio source.

39. (Canceled)

40. (Currently Amended) The headphone assembly of claim [[12]] 41, wherein each of the first and second earphones comprise earbuds.

41. (Currently Amended) The headphone assembly of claim 2, wherein:

the wireless circuit comprises first and second wireless ~~circuit~~ circuits;

the first wireless circuit is in the first earphone; and

the second wireless circuit is in the second earphone.

42. (Previously Presented) The headphone assembly of claim 40, wherein each of the first and second earphones comprises:

a body portion that sits at least partially in an ear of the user when the headphone assembly is worn by the user; and

an elongated portion that extends from the body portion.

43. (Previously Presented) The headphone assembly of claim 42, wherein at least one of the first and second earphones is charged by a docking station.

44. (Previously Presented) The headphone assembly of claim 43, wherein:

in a first audio play mode, the first and second earphones play audio content stored on a mobile, digital audio player and transmitted to the headphone assembly from the mobile, digital audio player via the one or more ad hoc wireless communication links; and

in a second audio play mode, the earphones play audio content streamed from the remote, network-connected server.

45. (Previously Presented) The headphone assembly of claim 43, wherein the processor is for:

processing audible utterances by the user picked up by the microphone in response to activation of the microphone by the user; and

transmitting a communication based on the audible utterances via the one or more ad hoc wireless communication links.

46. (Previously Presented) The headphone assembly of claim 44, wherein the processor is for:

processing audible utterances by the user picked up by the microphone in response to activation of the microphone by the user; and

transmitting a communication based on the audible utterances via the one or more ad hoc wireless communication links.

47. (Currently Amended) The headphone assembly of claim [[41]] 40, wherein each of the first and second earphones further comprises:

an adjustable, curved hanger bar that sits upon an upper external curvature of the user's ear, behind an upper portion of an auricula of the user's ear, when the headphone assembly is worn by the user; and

a body connected to the hanger bar, wherein the earphone extends from the body into the user's ear when the headphone assembly is worn by the user.

48. (Previously Presented) The headphone assembly of claim 47, wherein at least one of the first and second earphones is charged by a docking station.

49. (Previously Presented) The headphone assembly of claim 47, wherein:

the mobile, digital audio player is a first digital audio source;

the headphone assembly transitions to play digital audio content received wirelessly from a second digital audio source via a second wireless communication link based on, at least, a signal strength level for the second wireless communication link, wherein the second digital audio source is different from the first digital audio source

50. (Currently Amended) The headphone assembly of claim [[2]] 47, wherein upon activation of the microphone by the user, data are transmitted about the headphone assembly to a remote device.

51. (Previously Presented) The headphone assembly of claim 42, wherein:

the mobile, digital audio player is a first digital audio source;

the headphone assembly transitions to play digital audio content received wirelessly from a second digital audio source via a second wireless communication link based on, at least, a signal strength level for the second wireless communication link, wherein the second digital audio source is different from the first digital audio source.

52. (Previously Presented) The headphone assembly of claim 44, wherein:

the mobile, digital audio player is a first digital audio source;

the headphone assembly transitions to play digital audio content received wirelessly from a second digital audio source via a second wireless communication link based on, at least, a signal strength level for the second wireless communication link, wherein the second digital audio source is different from the first digital audio source.

53. (Previously Presented) The headphone assembly of claim 45, wherein:
the mobile, digital audio player is a first digital audio source;
the headphone assembly transitions to play digital audio content received wirelessly from a second digital audio source via a second wireless communication link based on, at least, a signal strength level for the second wireless communication link, wherein the second digital audio source is different from the first digital audio source.

54. (Currently Amended) The headphone assembly of claim [[41]] 8, wherein the headphone assembly is for receiving firmware upgrades transmitted from the remote, network-connected server.

55. (Previously Presented) The headphone assembly of claim 2, wherein the headphone assembly further comprises first and second integrated circuits, wherein the first integrated circuit comprises the wireless communication circuit and the second integrated circuit, which is separate from the first integrated circuit, comprises the processor.

56. (Previously Presented) The headphone assembly of claim 2, wherein each of the first and second earphones further comprises:
an adjustable, curved hanger bar that sits upon an upper external curvature of the user's ear, behind an upper portion of an auricula of the user's ear, when the headphone assembly is worn by the user; and
a body connected to the hanger bar, wherein the earphone extends from the body into the user's ear when the headphone assembly is worn by the user.

57. (Previously Presented) The headphone assembly of claim 2, wherein each of the first and second earphones comprise earbuds.

58. (Previously Presented) The headphone assembly of claim 2, wherein each of the first and second earphones comprise on-ear speaker elements.

59. (Previously Presented) The headphone assembly of claim 2, wherein each of the first and second earphones comprise over-ear speaker elements.

60. (Previously Presented) The headphone assembly of claim 47, wherein the headphone assembly is for receiving firmware upgrades transmitted from the remote, network-connected server.

61. (New) The headphone assembly of claim 2, wherein the processor comprises a digital signal processor that provides a sound quality enhancement for the audio content played by the acoustic transducers.

62. (New) The headphone assembly of claim 61, further comprising a baseband processor circuit that is in communication with the wireless communication circuit.

63. (New) The headphone assembly of claim 2, wherein each of the first and second earphones comprise:

an antenna for receiving wireless signals from the mobile, digital audio player via the one or more ad hoc wireless communication links;

a wireless communication circuit connected to the antenna, wherein the wireless communication circuit is for receiving and transmitting wireless signals to and from the headphone assembly;

a processor;

a memory for storing firmware that is executed by the processor; and

a rechargeable battery for powering the headphone assembly.

64. (New) The headphone assembly of claim 63, wherein each of the first and second earphones comprise an earbud.

65. (New) The headphone assembly of claim 64, wherein the processor of each of the first and second earphones comprises a digital signal processor that provides a sound quality enhancement for the audio content played by the acoustic transducer of the earphone.

66. (New) The headphone assembly of claim 65, wherein the processor of each of the first and second earphones comprises a baseband processor circuit that is in communication with the wireless communication circuit of the earphone.

REMARKS

Examiner Interview

On August 21, 2019, Applicant's undersigned attorney of record conducted a telephonic interview with Examiner Doan. The participants discussed the pending obviousness-type double patenting (ODP) and obviousness rejections. The participants also discussed proposed amendments to claims 2 and 8 that are identical to the amendments to claims 2 and 8 herein. Examiner Doan stated that, provided Applicant overcomes the ODP rejections by appropriate filing terminal disclaimers, he would allow claims 2 and 8 as amended. Applicant thanks Examiner Doan for his comments and indications of allowability for amended claims 2 and 8.

Overview of Claim Amendments

In this Amendment, Applicant has amended independent claim 2 to include the subject matter of original claim 11 and amended claim 8 to be an independent claim. Also, Applicant made the following amendments to the claims:

- Claim 11 is amended to recite that the headphone assembly receives the firmware upgrades "wirelessly";
- Claim 12 is amended to depend from claim 2;
- Claims 13,16 and 54 are amended to depend from claim 8;
- Claim 40 is amended to depend from claim 41;
- Claim 41 is amended to correct a clerical error;
- Claim 46 is amended to depend from claim 40;
- Claim 50 is amended to depend from claim 47; and
- Claims 61-66 are added as new claims.

Support for the claim amendments and the new claims can be found throughout the Subject Application as originally filed; no new matter is added. The amendments are made without prejudice or disclaimer. Additionally, claims 18, 20, 39 are canceled without prejudice or disclaimer.

Applicant traverses the rejections and submits that the presently pending claims are in condition for allowance for the reasons set forth below.

ODP Rejections

The Office Action rejected original claim 2 for ODP over, separately, the following U.S. patents owned by Koss Corporation:

1. 8,190,203
2. 8,571,544
3. 9,049,502
4. 8,655,420
5. 9,438,987
6. 9,497,535
7. 9,729,959
8. 9,986,325
9. 10,206,025

Applicant (Koss Corporation) has filed a terminal disclaimer for each of these commonly owned patents. Applicant filed a terminal disclaimer for Pat. 10,206,025 on April 8, 2019 and filed an e-petition terminal disclaimer for patents 1-8 on the list above on August 21, 2019. The terminal disclaimers are filed without prejudice or disclaimer.

In light of the terminal disclaimers, the ODP rejections should be withdrawn.

Section 103 Rejections

The Office Action rejected original claims 2-42, 44-47 and 49-60 as being obvious under § 103(a) in view of Lair (Pub. 2009/0029743) in view of Rezvani (Pub. 2007/0136446). Claims 43 and 48 were rejected as being obvious over Lair, Rezvani and Goldman (Pub. 2011/0275323).

Without prejudice or disclaimer, and in order to expedite prosecution and allowance, Applicant has amended independent claim 2 to clarify that the headphone assembly comprises "a memory for storing firmware that is executed by the processor" and that the headphone assembly "is for receiving firmware upgrades transmitted from the remote, network-connected server." Support for the amendments may be found at ¶¶ [0025] and [0033], for example, of the Subject Application as originally filed. The cited prior art does not disclose, teach or suggest a headphone assembly that comprises "a memory for storing firmware that is executed by the processor" and where the headphone assembly "is for receiving firmware upgrades transmitted from the remote, network-connected server." Therefore, amended claim 2 is nonobvious, along

with the claims that depend from it. *See* MPEP § 2143.03 ("If an independent claim is nonobvious under 35 U.S.C. 103, then any claim depending therefrom is nonobvious.")

Original dependent claim 8 is amended to be a dependent claim (without reciting that headphone assembly comprises "a memory for storing firmware that is executed by the processor" and that the headphone assembly "is for receiving firmware upgrades transmitted from the remote, network-connected server). Independent claim 8, as amended, states that the headphone assembly "transitions to play digital audio content received wirelessly from a second digital audio source via a second wireless communication link based on, at least, a signal strength level for the second wireless communication link, wherein the second digital audio source is different from the first digital audio source." The cited prior art does not disclose, teach or suggest a headphone assembly that transitions from one source to another as set forth in amended claim 8. Therefore, amended claim 8 is nonobvious, along with the claims that depend from it. See MPEP § 2143.03 ("If an independent claim is nonobvious under 35 U.S.C. 103, then any claim depending therefrom is nonobvious.")

New Claims 61-66

New claims 61-66 are dependent claims that depend, either directly or indirectly, from independent and nonobvious claim 2. At least by virtue of their dependence upon claim 2, new claims 61-66 are nonobvious.

CONCLUSION

In view of the foregoing remarks, Applicant respectfully submits that all of the claims presented in the present application are in condition for allowance. Applicant's present response should not in any way be taken as acquiescence to any of the specific assertions, statements, etc., presented in the Office Action not explicitly addressed herein, including the rejections of the dependent claims. Applicant reserves the right to address specifically all such assertions and statements in subsequent responses. Applicant also reserves the right to seek claims of a broader or different scope in a continuation application.

Applicant has made a diligent effort to properly respond to the Office Action and believes that the claims are in condition for allowance. If the Examiner has any remaining concerns, the

Examiner is invited to contact the undersigned at the telephone number set forth below so that such concerns may be expeditiously addressed.

Respectfully submitted,

Date: August 22, 2019

/Mark G. Knedeisen/
Mark G. Knedeisen
Reg. No. 42,747

K&L GATES LLP
K&L Gates Center
210 Sixth Ave.
Pittsburgh, Pennsylvania 15222

Ph. (412) 355-6342
Fax (412) 355-6501
email: mark.knedeisen@klgates.com

Electronic Patent Application Fee Transmittal

Application Number:	16375879
Filing Date:	05-Apr-2019
Title of Invention:	SYSTEM WITH WIRELESS EARPHONES
First Named Inventor/Applicant Name:	Michael J. Koss
Filer:	Mark G. Knedeisen/Theresa Merante
Attorney Docket Number:	080188PCTUSCON10

Filed as Small Entity

Filing Fees for Utility under 35 USC 111(a)

Description	Fee Code	Quantity	Amount	Sub-Total in USD($)
Basic Filing:				
Pages:				
Claims:				
CLAIMS IN EXCESS OF 20	2202	3	50	150
Miscellaneous-Filing:				
Petition:				
Patent-Appeals-and-Interference:				
Post-Allowance-and-Post-Issuance:				

Description	Fee Code	Quantity	Amount	Sub-Total in USD($)
Extension-of-Time:				
Miscellaneous:				
			Total in USD ($)	**150**

Electronic Acknowledgement Receipt	
EFS ID:	36946620
Application Number:	16375879
International Application Number:	
Confirmation Number:	1056
Title of Invention:	SYSTEM WITH WIRELESS EARPHONES
First Named Inventor/Applicant Name:	Michael J. Koss
Customer Number:	26285
Filer:	Mark G. Knedeisen/Theresa Merante
Filer Authorized By:	Mark G. Knedeisen
Attorney Docket Number:	080188PCTUSCON10
Receipt Date:	22-AUG-2019
Filing Date:	05-APR-2019
Time Stamp:	13:03:36
Application Type:	Utility under 35 USC 111(a)

Payment information:

Submitted with Payment	yes
Payment Type	DA
Payment was successfully received in RAM	$150
RAM confirmation Number	E20198LD03596393
Deposit Account	021818
Authorized User	Theresa Merante
The Director of the USPTO is hereby authorized to charge indicated fees and credit any overpayment as follows: 37 CFR 1.16 (National application filing, search, and examination fees) 37 CFR 1.17 (Patent application and reexamination processing fees)	

File Listing:

Document Number	Document Description	File Name	File Size(Bytes)/ Message Digest	Multi Part /.zip	Pages (if appl.)
1	Transmittal Letter	Amendment_Transmittal.pdf	128988 dcd393547a009fef6582277151a4fe6abd30aba9	no	4
Warnings:					
Information:					
2		Amendment.pdf	177537 c7a77bc4f67e66fde4e6bc6cf96507ee06d1fecd	yes	19

	Multipart Description/PDF files in .zip description		
	Document Description	**Start**	**End**
	Amendment/Req. Reconsideration-After Non-Final Reject	1	1
	Claims	2	15
	Applicant Arguments/Remarks Made in an Amendment	16	19

Warnings:					
Information:					
3	Fee Worksheet (SB06)	fee-info.pdf	30347 74f6c29098bbf693ba82bfacec7394d8451f8625	no	2
Warnings:					
Information:					
		Total Files Size (in bytes):	336872		

This Acknowledgement Receipt evidences receipt on the noted date by the USPTO of the indicated documents, characterized by the applicant, and including page counts, where applicable. It serves as evidence of receipt similar to a Post Card, as described in MPEP 503.

New Applications Under 35 U.S.C. 111

If a new application is being filed and the application includes the necessary components for a filing date (see 37 CFR 1.53(b)-(d) and MPEP 506), a Filing Receipt (37 CFR 1.54) will be issued in due course and the date shown on this Acknowledgement Receipt will establish the filing date of the application.

National Stage of an International Application under 35 U.S.C. 371

If a timely submission to enter the national stage of an international application is compliant with the conditions of 35 U.S.C. 371 and other applicable requirements a Form PCT/DO/EO/903 indicating acceptance of the application as a national stage submission under 35 U.S.C. 371 will be issued in addition to the Filing Receipt, in due course.

New International Application Filed with the USPTO as a Receiving Office

If a new international application is being filed and the international application includes the necessary components for an international filing date (see PCT Article 11 and MPEP 1810), a Notification of the International Application Number and of the International Filing Date (Form PCT/RO/105) will be issued in due course, subject to prescriptions concerning national security, and the date shown on this Acknowledgement Receipt will establish the international filing date of the application.

PATENT

IN THE UNITED STATES PATENT AND TRADEMARK OFFICE

Applicant:	Koss Corporation	**Examiner:**	Doan, Kiet M.
Inventor(s):	Michael J. Koss, et al.	**Art Unit:**	2641
Application No.:	16/375,879	**Atty. Docket No**.	080188PCTUSCON10
Filing Date:	April 5, 2019	**Conf. No.:**	1056

Title: SYSTEM WITH WIRELESS EARPHONES

VIA EFS-Web August 22, 2019

Mail Stop Amendment
Commissioner for Patents
P.O. Box 1450
Alexandria, VA 22313-1450

AMENDMENT TRANSMITTAL

1. Transmitted herewith is an amendment for this application.

STATUS

2. Applicant is

☒ A statement that this filing is by a small entity is hereby asserted in accordance with the rule change effective September 8, 2000, 65 Fed. Reg. 54603.

☐ other than a small entity.

EXTENSION OF TERM

NOTE: "Extension of Time in Patent Cases (Supplement Amendments) - If a timely and complete response has been filed after a Non-Final Office Action, an extension of time is not required to permit filing and/or entry of an additional amendment after expiration of the shortened statutory period.

If a timely response has been filed after a Final Office Action, an extension of time is required to permit filing and/or entry of a Notice of Appeal or filing and/or entry of an additional amendment after expiration of the shortened statutory period unless the timely-filed response placed the application in condition for allowance. Of course, if a Notice of Appeal has been filed within the shortened statutory period, the period has ceased to run." Notice of December 10, 1985 (1061 O.G. 34-35).

NOTE: See 37 CFR 1.645 for extensions of time in interference proceedings, and 37 CFR 1.550(c) for extensions of time in reexamination proceedings.

3. The proceedings herein are for a patent application and the provisions of 37 CFR 1.136 apply.

(complete (a) or (b), as applicable)

(a) ☐ Applicant petitions for an extension of time under 37 CFR 1.136 (fees: 37 CFR 1.17(a)-(d) for the total number of months checked below:

Extension (months)	Fee for other than small entity	Fee for small entity
☐ one month	$ 200.00	$ 100.00
☐ two months	$ 600.00	$ 300.00
☐ three months	$1,400.00	$ 700.00
☐ four months	$2,200.00	$ 1,100.00

Fee: $

If an additional **extension** of time is required, please consider this a petition therefor.

(check and complete the next item, if applicable)

☐ An extension for _____ months has already been secured and the fee paid therefor of $_____ is deducted from the total fee due for the total months of extension now requested.

Extension fee due with this request **$**

OR

(b) ☒ Applicant believes that no extension of term is required. However, this conditional petition is being made to provide for the possibility that applicant has inadvertently overlooked the need for a petition for extension of time.

FEE FOR CLAIMS

4. The fee for claims (37 CFR 1.16(b)-(d) has been calculated as shown below:

(Col. 1)	(Col. 2)	(Col. 3)	SMALL ENTITY			OTHER THAN A SMALL ENTITY	
CLAIMS REMAINING AFTER AMENDMENT	HIGHEST NO PREVIOUSLY PAID FOR	PRESENT EXTRA	RATE	ADDIT. FEE	OR	RATE	ADDIT. FEE
TOTAL 62•	MINUS 59••	=3	X50=	$150		X100=	$0
INDEP. 2•	MINUS 3•••	=0	X230=	$0		X460=	$0
☐ FIRST PRESENTATION OF MULTIPLE DEP. CLAIM			+410=	$0		+820=	$0
			TOTAL ADDIT. FEE	$150	OR	TOTAL ADDIT. FEE	$0

- • If the entry in Col. 1 is less than entry in Col. 2, write ")" in Col. 3.
- •• If the "Highest No. Previously Paid for" IN THIS SPACE is less than 20, enter "20."
- ••• If the "Highest No. Previously Paid for" IN THIS SPACE is less than 3, enter "3."
  The "Highest No. Previously Paid for" (Total or indep.) is the highest number found in the appropriate box in Col. 1 of a prior amendment or the number of claims originally filed.

WARNING "After final rejection or action (§ 1.113) amendments may be made cancelling claims or complying with any requirement of form which has been made." 37 CFR § 1.116(a) (emphasis added).

Complete (c) or (d), as applicable)

(c) ☐ No additional fee for claims is required.

OR

(d) ☒ Total additional fee for claims required $ 150.00

FEE PAYMENT

5. ☐ Attached is a check in the sum of $ _____

☒ Charge Account No. 02-1818 the sum of $**150.00**

FEE DEFICIENCY

NOTE: If there is a fee deficiency and there is no authorization to charge an account, additional fees are necessary to cover the additional time consumed in making up the original deficiency. If the maximum, six-month period has expired before the deficiency is noted and corrected, the application is held abandoned. In those instances where authorization to charge is included, processing delays are encountered in returning the papers to the PTO Finance Branch in order to apply these charges prior to action on the cases. Authorization to charge the deposit account for any fee deficiency should be checked. See the Notice of April 7, 1986, (1065 O.G. 31-33).

6. ☒ If any additional extension and/or fee is required, charge Account No.

02-1818.

AND/OR

7. ☒ If any additional fee for claims is required, charge Account No.

02-1818.

/Mark G. Knedeisen/
SIGNATURE OF ATTORNEY

Reg. No.: 42,747

Mark G. Knedeisen
(type or print name of attorney)

Tel. No.: 412-355-6342

Customer No. 26285

K&L Gates LLP
P.O. Address
K&L Gates Center
210 Sixth Avenue
Pittsburgh, PA 15222-2613

PTO/SB/06 (09-11)
Approved for use through 1/31/2014. OMB 0651-0032
U.S. Patent and Trademark Office; U.S. DEPARTMENT OF COMMERCE
Under the Paperwork Reduction Act of 1995, no persons are required to respond to a collection of information unless it displays a valid OMB control number.

PATENT APPLICATION FEE DETERMINATION RECORD Substitute for Form PTO-875	Application or Docket Number 16/375,879	Filing Date 04/05/2019	☐ To be Mailed

ENTITY: ☐ LARGE ☑ SMALL ☐ MICRO

APPLICATION AS FILED - PART I

FOR	(Column 1) NUMBER FILED	(Column 2) NUMBER EXTRA		RATE ($)	FEE ($)
☐ BASIC FEE (37 CFR 1.16(a), (b), or (c))	N/A	N/A		N/A	
☐ SEARCH FEE (37 CFR 1.16(k), (i), or (m))	N/A	N/A		N/A	
☐ EXAMINATION FEE (37 CFR 1.16(o), (p), or (q))	N/A	N/A		N/A	
TOTAL CLAIMS (37 CFR 1.16(i))	minus 20 =	*		x $50 =	
INDEPENDENT CLAIMS (37 CFR 1.16(h))	minus 3 =	*		x $230 =	
☐ APPLICATION SIZE FEE (37 CFR 1.16(s))	If the specification and drawings exceed 100 sheets of paper, the application size fee due is $310 ($155 for small entity) for each additional 50 sheets or fraction thereof. See 35 U.S.C. 41(a)(1)(G) and 37 CFR 1.16(s).				
☐ MULTIPLE DEPENDENT CLAIM PRESENT (37 CFR 1.16(j))					
* If the difference in column 1 is less than zero, enter "0" in column 2.				TOTAL	

APPLICATION AS AMENDED - PART II

		(Column 1)		(Column 2)	(Column 3)			
AMENDMENT	08/22/2019	CLAIMS REMAINING AFTER AMENDMENT		HIGHEST NUMBER PREVIOUSLY PAID FOR	PRESENT EXTRA		RATE ($)	ADDITIONAL FEE ($)
	Total (37 CFR 1.16(i))	* 62	Minus	** 59	= 3		x $50 =	150
	Independent (37 CFR 1.16(h))	* 2	Minus	*** 3	= 0		x $230 =	0
	☐ Application Size Fee (37 CFR 1.16(s))							
	☐ FIRST PRESENTATION OF MULTIPLE DEPENDENT CLAIM (37 CFR 1.16(j))							
							TOTAL ADD'L FEE	150

		(Column 1)		(Column 2)	(Column 3)			
AMENDMENT		CLAIMS REMAINING AFTER AMENDMENT		HIGHEST NUMBER PREVIOUSLY PAID FOR	PRESENT EXTRA		RATE ($)	ADDITIONAL FEE ($)
	Total (37 CFR 1.16(i))	*	Minus	**	=		x $0 =	
	Independent (37 CFR 1.16(h))	*	Minus	***	=		x $0 =	
	☐ Application Size Fee (37 CFR 1.16(s))							
	☐ FIRST PRESENTATION OF MULTIPLE DEPENDENT CLAIM (37 CFR 1.16(j))							
							TOTAL ADD'L FEE	

* If the entry in column 1 is less than the entry in column 2, write "0" in column 3.	LIE
** If the "Highest Number Previously Paid For" IN THIS SPACE is less than 20, enter "20".	/KIMBERLY N PANNELL/
*** If the "Highest Number Previously Paid For" IN THIS SPACE is less than 3, enter "3".	
The "Highest Number Previously Paid For" (Total or Independent) is the highest number found in the appropriate box in column 1.	

This collection of information is required by 37 CFR 1.16. The information is required to obtain or retain a benefit by the public which is to file (and by the USPTO to process) an application. Confidentiality is governed by 35 U.S.C. 122 and 37 CFR 1.14. This collection is estimated to take 12 minutes to complete, including gathering, preparing, and submitting the completed application form to the USPTO. Time will vary depending upon the individual case. Any comments on the amount of time you require to complete this form and/or suggestions for reducing this burden, should be sent to the Chief Information Officer, U.S. Patent and Trademark Office, U.S. Department of Commerce, P.O. Box 1450, Alexandria, VA 22313-1450. DO NOT SEND FEES OR COMPLETED FORMS TO THIS ADDRESS. **SEND TO: Commissioner for Patents, P.O. Box 1450, Alexandria, VA 22313-1450.**

If you need assistance in completing the form, call 1-800-PTO-9199 and select option 2.

Doc Code: DIST.E.FILE **Document Description: Electronic Terminal Disclaimer - Filed**	PTO/SB/26 U.S. Patent and Trademark Office Department of Commerce

Electronic Petition Request	**TERMINAL DISCLAIMER TO OBVIATE A DOUBLE PATENTING REJECTION OVER A "PRIOR" PATENT**
Application Number	16375879
Filing Date	05-Apr-2019
First Named Inventor	Michael Koss
Attorney Docket Number	080188PCTUSCON10
Title of Invention	SYSTEM WITH WIRELESS EARPHONES

☒ Filing of terminal disclaimer does not obviate requirement for response under 37 CFR 1.111 to outstanding Office Action

☒ This electronic Terminal Disclaimer is not being used for a Joint Research Agreement.

Owner	Percent Interest
Koss Corporation	100%

The owner(s) with percent interest listed above in the instant application hereby disclaims, except as provided below, the terminal part of the statutory term of any patent granted on the instant application which would extend beyond the expiration date of the full statutory term of prior patent number(s)

8655420

9049502

8571544

8190203

9986325

9729959

9497535

9438987

as the term of said prior patent is presently shortened by any terminal disclaimer. The owner hereby agrees that any patent so granted on the instant application shall be enforceable only for and during such period that it and the prior patent are commonly owned. This agreement runs with any patent granted on the instant application and is binding upon the grantee, its successors or assigns.

In making the above disclaimer, the owner does not disclaim the terminal part of the term of any patent granted on the instant application that would extend to the expiration date of the full statutory term of the prior patent, "as the term of said prior patent is presently shortened by any terminal disclaimer," in the event that said prior patent later:
- expires for failure to pay a maintenance fee;
- is held unenforceable;
- is found invalid by a court of competent jurisdiction;
- is statutorily disclaimed in whole or terminally disclaimed under 37 CFR 1.321;
- has all claims canceled by a reexamination certificate;
- is reissued; or
- is in any manner terminated prior to the expiration of its full statutory term as presently shortened by any terminal disclaimer.

◉ Terminal disclaimer fee under 37 CFR 1.20(d) is included with Electronic Terminal Disclaimer request.

○ I certify, in accordance with 37 CFR 1.4(d)(4), that the terminal disclaimer fee under 37 CFR 1.20(d) required for this terminal disclaimer has already been paid in the above-identified application.

Applicant claims the following fee status:

◉ Small Entity

○ Micro Entity

○ Regular Undiscounted

I hereby declare that all statements made herein of my own knowledge are true and that all statements made on information and belief are believed to be true; and further that these statements were made with the knowledge that willful false statements and the like so made are punishable by fine or imprisonment, or both, under Section 1001 of Title 18 of the United States Code and that such willful false statements may jeopardize the validity of the application or any patent issued thereon.

THIS PORTION MUST BE COMPLETED BY THE SIGNATORY OR SIGNATORIES

I certify, in accordance with 37 CFR 1.4(d)(4) that I am:

◉ An attorney or agent registered to practice before the Patent and Trademark Office who is of record in this application

Registration Number 42747

○ A sole inventor

○ A joint inventor; I certify that I am authorized to sign this submission on behalf of all of the inventors as evidenced by the power of attorney in the application

○ A joint inventor; all of whom are signing this request

Signature	/Mark G. Knedeisen/
Name	Mark G. Knedeisen

*Statement under 37 CFR 3.73(b) is required if terminal disclaimer is signed by the assignee (owner).
Form PTO/SB/96 may be used for making this certification. See MPEP § 324.

Electronic Patent Application Fee Transmittal

Application Number:	16375879
Filing Date:	05-Apr-2019
Title of Invention:	SYSTEM WITH WIRELESS EARPHONES
First Named Inventor/Applicant Name:	Michael J. Koss
Filer:	Mark G. Knedeisen/Amanda Kernan
Attorney Docket Number:	080188PCTUSCON10

Filed as Small Entity

Filing Fees for Utility under 35 USC 111(a)

Description	Fee Code	Quantity	Amount	Sub-Total in USD($)
Basic Filing:				
STATUTORY OR TERMINAL DISCLAIMER	2814	1	160	160
Pages:				
Claims:				
Miscellaneous-Filing:				
Petition:				
Patent-Appeals-and-Interference:				
Post-Allowance-and-Post-Issuance:				

Description	Fee Code	Quantity	Amount	Sub-Total in USD($)
Extension-of-Time:				
Miscellaneous:				
			Total in USD ($)	**160**

Doc Code: DISQ.E.FILE
Document Description: Electronic Terminal Disclaimer – Approved

Application No.: 16375879

Filing Date: 05-Apr-2019

Applicant/Patent under Reexamination: Koss

Electronic Terminal Disclaimer filed on August 21, 2019

☒ APPROVED

This patent is subject to a terminal disclaimer

☐ DISAPPROVED

Approved/Disapproved by: Electronic Terminal Disclaimer automatically approved by EFS-Web

U.S. Patent and Trademark Office

Electronic Acknowledgement Receipt	
EFS ID:	36936516
Application Number:	16375879
International Application Number:	
Confirmation Number:	1056
Title of Invention:	SYSTEM WITH WIRELESS EARPHONES
First Named Inventor/Applicant Name:	Michael J. Koss
Customer Number:	26285
Filer:	Mark G. Knedeisen/Amanda Kernan
Filer Authorized By:	Mark G. Knedeisen
Attorney Docket Number:	080188PCTUSCON10
Receipt Date:	21-AUG-2019
Filing Date:	05-APR-2019
Time Stamp:	13:45:30
Application Type:	Utility under 35 USC 111(a)

Payment information:

Submitted with Payment	yes
Payment Type	DA
Payment was successfully received in RAM	$160
RAM confirmation Number	E20198KD45262351
Deposit Account	021818
Authorized User	Amanda Kernan
The Director of the USPTO is hereby authorized to charge indicated fees and credit any overpayment as follows: 37 CFR 1.16 (National application filing, search, and examination fees) 37 CFR 1.17 (Patent application and reexamination processing fees)	

37 CFR 1.21 (Miscellaneous fees and charges)

File Listing:

Document Number	Document Description	File Name	File Size(Bytes)/ Message Digest	Multi Part /.zip	Pages (if appl.)
1	Terminal Disclaimer-Filed (Electronic)	eTerminal-Disclaimer.pdf	36312 b6ed51292a642e931c71e4d77619d24bac9607ec	no	3
Warnings:					
Information:					
2	Fee Worksheet (SB06)	fee-info.pdf	30544 b2c355547c0f05bd11ebbcf7d9bd1bce20109b8a	no	2
Warnings:					
Information:					
		Total Files Size (in bytes):	66856		

This Acknowledgement Receipt evidences receipt on the noted date by the USPTO of the indicated documents, characterized by the applicant, and including page counts, where applicable. It serves as evidence of receipt similar to a Post Card, as described in MPEP 503.

New Applications Under 35 U.S.C. 111
If a new application is being filed and the application includes the necessary components for a filing date (see 37 CFR 1.53(b)-(d) and MPEP 506), a Filing Receipt (37 CFR 1.54) will be issued in due course and the date shown on this Acknowledgement Receipt will establish the filing date of the application.
National Stage of an International Application under 35 U.S.C. 371
If a timely submission to enter the national stage of an international application is compliant with the conditions of 35 U.S.C. 371 and other applicable requirements a Form PCT/DO/EO/903 indicating acceptance of the application as a national stage submission under 35 U.S.C. 371 will be issued in addition to the Filing Receipt, in due course.
New International Application Filed with the USPTO as a Receiving Office
If a new international application is being filed and the international application includes the necessary components for an international filing date (see PCT Article 11 and MPEP 1810), a Notification of the International Application Number and of the International Filing Date (Form PCT/RO/105) will be issued in due course, subject to prescriptions concerning national security, and the date shown on this Acknowledgement Receipt will establish the international filing date of the application.

PTO/SB/08a (07-09)
Approved for use through 07/31/2012. OMB 0651-0031
U.S. Patent and Trademark Office; U.S. DEPARTMENT OF COMMERCE
Under the Paperwork Reduction Act of 1995, no persons are required to respond to a collection of information unless it contains a valid OMB control number.

Substitute for form 1449/PTO

INFORMATION DISCLOSURE STATEMENT BY APPLICANT

(use as many sheets as necessary)

Sheet 1 of 1

Complete if Known	
Application Number	16/375,879
Filing Date	April 5, 2019
First Named Inventor	Michael J. Koss
Art Unit	2641
Examiner Name	Kiet M. Doan
Attorney Docket Number	080188PCTUSCON10

U.S. PATENT DOCUMENTS

Examiner Initials*	Cite No.[1]	Document Number Number - Kind Code[2] (*if known*)	Publication Date MM-DD-YYYY	Name of Patentee or Applicant of Cited Document	Pages, Columns, Lines, Where Relevant Passages or Relevant Figures Appear
		9,497,535 B1	11-15-2016	Koss et al.	
		9,729,959 B2	08-08-2017	Koss et al.	

Examiner Signature		Date Considered	

*EXAMINER: Initial if reference considered, whether or not citation is in conformance with MPEP 609. Draw line through citation if not in conformance and not considered. Include copy of this form with next communication to applicant. [1] Applicant's unique citation designation number (optional). [2] See Kinds Codes of USPTO Patent Documents at www.uspto.gov or MPEP 901.04. [3] Enter Office that issued the document, by the two-letter code (WIPO Standard ST.3). [4] For Japanese patent documents, the indication of the year of the reign of the Emperor must precede the serial number of the patent document. [5] Kind of document by the appropriate symbols as indicated on the document under WIPO Standard ST.16 if possible. [6] Applicant is to place a check mark here if English language Translation is attached.

This collection of information is required by 37 CFR 1.97 and 1.98. The information is required to obtain or retain a benefit by the public which is to file (and by the USPTO to process) an application. Confidentiality is governed by 35 U.S.C. 122 and 37 CFR 1.14. This collection is estimated to take 2 hours to complete, including gathering, preparing, and submitting the completed application form to the USPTO. Time will vary depending upon the individual case. Any comments on the amount of time you require to complete this form and/or suggestions for reducing this burden, should be sent to the Chief Information Officer, U.S. Patent and Trademark Office, P.O. Box 1450, Alexandria, VA 22313-1450. DO NOT SEND FEES OR COMPLETED FORMS TO THIS ADDRESS. **SEND TO: Commissioner for Patents, P.O. Box 1450, Alexandria, VA 22313-1450.**

If you need assistance in completing the form, call 1-800-PTO-9199 (1-800-786-9199) and select option 2.

502427496 v1

Electronic Patent Application Fee Transmittal	
Application Number:	16375879
Filing Date:	05-Apr-2019
Title of Invention:	SYSTEM WITH WIRELESS EARPHONES
First Named Inventor/Applicant Name:	Michael J. Koss
Filer:	Mark G. Knedeisen/Amanda Kernan
Attorney Docket Number:	080188PCTUSCON10
Filed as Small Entity	
Filing Fees for Utility under 35 USC 111(a)	

Description	Fee Code	Quantity	Amount	Sub-Total in USD($)
Basic Filing:				
Pages:				
Claims:				
Miscellaneous-Filing:				
Petition:				
Patent-Appeals-and-Interference:				
Post-Allowance-and-Post-Issuance:				
Extension-of-Time:				

Description	Fee Code	Quantity	Amount	Sub-Total in USD($)
Miscellaneous:				
SUBMISSION- INFORMATION DISCLOSURE STMT	2806	1	120	120
		Total in USD ($)		**120**

Electronic Acknowledgement Receipt	
EFS ID:	36942015
Application Number:	16375879
International Application Number:	
Confirmation Number:	1056
Title of Invention:	SYSTEM WITH WIRELESS EARPHONES
First Named Inventor/Applicant Name:	Michael J. Koss
Customer Number:	26285
Filer:	Mark G. Knedeisen/Amanda Kernan
Filer Authorized By:	Mark G. Knedeisen
Attorney Docket Number:	080188PCTUSCON10
Receipt Date:	21-AUG-2019
Filing Date:	05-APR-2019
Time Stamp:	17:05:05
Application Type:	Utility under 35 USC 111(a)

Payment information:

Submitted with Payment	yes
Payment Type	DA
Payment was successfully received in RAM	$120
RAM confirmation Number	E20198KH05286612
Deposit Account	021818
Authorized User	Amanda Kernan
The Director of the USPTO is hereby authorized to charge indicated fees and credit any overpayment as follows: 37 CFR 1.16 (National application filing, search, and examination fees) 37 CFR 1.17 (Patent application and reexamination processing fees)	

File Listing:

Document Number	Document Description	File Name	File Size(Bytes)/ Message Digest	Multi Part /.zip	Pages (if appl.)
1		8-21-2019-Supplemental-IDS.pdf	213991 73dcb1a5c86f829ddf01c880058517e0a46e3f8a	yes	2
	Multipart Description/PDF files in .zip description				
	Document Description		**Start**	**End**	
	Transmittal Letter		1	1	
	Information Disclosure Statement (IDS) Form (SB08)		2	2	
Warnings:					
Information:					
2	Fee Worksheet (SB06)	fee-info.pdf	30535 584a59396a958551472405170003e84d1c027c2a	no	2
Warnings:					
Information:					
		Total Files Size (in bytes):	244526		

This Acknowledgement Receipt evidences receipt on the noted date by the USPTO of the indicated documents, characterized by the applicant, and including page counts, where applicable. It serves as evidence of receipt similar to a Post Card, as described in MPEP 503.

New Applications Under 35 U.S.C. 111
If a new application is being filed and the application includes the necessary components for a filing date (see 37 CFR 1.53(b)-(d) and MPEP 506), a Filing Receipt (37 CFR 1.54) will be issued in due course and the date shown on this Acknowledgement Receipt will establish the filing date of the application.
National Stage of an International Application under 35 U.S.C. 371
If a timely submission to enter the national stage of an international application is compliant with the conditions of 35 U.S.C. 371 and other applicable requirements a Form PCT/DO/EO/903 indicating acceptance of the application as a national stage submission under 35 U.S.C. 371 will be issued in addition to the Filing Receipt, in due course.
New International Application Filed with the USPTO as a Receiving Office
If a new international application is being filed and the international application includes the necessary components for an international filing date (see PCT Article 11 and MPEP 1810), a Notification of the International Application Number and of the International Filing Date (Form PCT/RO/105) will be issued in due course, subject to prescriptions concerning national security, and the date shown on this Acknowledgement Receipt will establish the international filing date of the application.

IN THE UNITED STATES PATENT AND TRADEMARK OFFICE

Applicant:	Koss Corporation	)	
		)	
Inventors:	Michael J. Koss et al.	)	**Examiner:** Kiet M. Doan
		)	
Serial No.:	16/375,879	)	**Art Unit:** 2641
		)	
Filing Date:	April 5, 2019	)	**Atty. Docket No.** 080188PCTUSCON10

Title: SYSTEM WITH WIRELESS EARPHONES

SUPPLEMENTAL INFORMATION DISCLOSURE STATEMENT

Mail Stop Amendment
Commissioner for Patents
P.O. Box 1450
Alexandria, VA 22313-1450

Dear Commissioner:

Applicant, in accordance with its duty of disclosure pursuant to 37 C.F.R. § 1.56, hereby advises the United States Patent and Trademark Office of the references listed on the accompanying form PTO/SB/08.

Applicant notes that although the cited references may be relevant to the examination of the above-referenced application, under 37 C.F.R. § 1.97(h), the filing of this *Information Disclosure Statement* "shall not be construed to be an admission that the information cited in the statement is, or is considered to be, material to patentability as defined in § 1.56(b)." Applicant further notes that the filing of this *Information Disclosure Statement* is not an admission that the references cited herein constitutes prior art under 35 U.S.C. §§ 102-103 with respect to the captioned application.

As an Office Action has issued with respect to the referenced application, the Commissioner is hereby authorized to charge the appropriate fee(s) to Account No. 02-1818 for considering this Information Disclosure Statement.

Respectfully submitted,

Date: August 21, 2019

/Mark G. Knedeisen/
Mark G. Knedeisen
Reg. No. 42,747

K&L GATES LLP
K&L Gates Center
210 Sixth Avenue
Pittsburgh, Pennsylvania 15222

Ph. (412) 355-6342
Fax (412) 355-6501

PTO/SB/08a (07-09)
Approved for use through 07/31/2012. OMB 0651-0031
U.S. Patent and Trademark Office; U.S. DEPARTMENT OF COMMERCE
Under the Paperwork Reduction Act of 1995, no persons are required to respond to a collection of information unless it contains a valid OMB control number.

Substitute for form 1449/PTO

INFORMATION DISCLOSURE STATEMENT BY APPLICANT

(use as many sheets as necessary)

Sheet 1 of 2

Complete if Known	
Application Number	16/375,879
Filing Date	April 5, 2019
First Named Inventor	Michael J. Koss
Art Unit	2641
Examiner Name	Kiet M. Doan
Attorney Docket Number	080188PCTUSCON10

U.S. PATENT DOCUMENTS

Examiner Initials*	Cite No.[1]	Document Number Number - Kind Code[2] (*if known*)	Publication Date MM-DD-YYYY	Name of Patentee or Applicant of Cited Document	Pages, Columns, Lines, Where Relevant Passages or Relevant Figures Appear
		6006115	12-21-1999	Wingate	
		2008/0226094 A1	09-18-2008	Rutschman	
		2003/0182003 A1	09-25-2003	Takashima	
		2008/0194209 A1	08-14-2008	Haupt et al.	
		2006/0083388 A1	04-20-2006	Rothschild	
		2005/0136839 A1	06-23-2005	Seshadri et al.	
		2008/0215777 A1	09-04-2008	Richenstein et al.	

Examiner Signature		Date Considered	

*EXAMINER: Initial if reference considered, whether or not citation is in conformance with MPEP 609. Draw line through citation if not in conformance and not considered. Include copy of this form with next communication to applicant. [1] Applicant's unique citation designation number (optional). [2] See Kinds Codes of USPTO Patent Documents at www.uspto.gov or MPEP 901.04. [3] Enter Office that issued the document, by the two-letter code (WIPO Standard ST.3). [4] For Japanese patent documents, the indication of the year of the reign of the Emperor must precede the serial number of the patent document. [5] Kind of document by the appropriate symbols as indicated on the document under WIPO Standard ST.16 if possible. [6] Applicant is to place a check mark here if English language Translation is attached.

This collection of information is required by 37 CFR 1.97 and 1.98. The information is required to obtain or retain a benefit by the public which is to file (and by the USPTO to process) an application. Confidentiality is governed by 35 U.S.C. 122 and 37 CFR 1.14. This collection is estimated to take 2 hours to complete, including gathering, preparing, and submitting the completed application form to the USPTO. Time will vary depending upon the individual case. Any comments on the amount of time you require to complete this form and/or suggestions for reducing this burden, should be sent to the Chief Information Officer, U.S. Patent and Trademark Office, P.O. Box 1450, Alexandria, VA 22313-1450. DO NOT SEND FEES OR COMPLETED FORMS TO THIS ADDRESS. **SEND TO: Commissioner for Patents, P.O. Box 1450, Alexandria, VA 22313-1450.**

If you need assistance in completing the form, call 1-800-PTO-9199 (1-800-786-9199) and select option 2.

502421031 v1

PTO/SB/08a (07-09)
Approved for use through 07/31/2012. OMB 0651-0031
U.S. Patent and Trademark Office; U.S. DEPARTMENT OF COMMERCE
Under the Paperwork Reduction Act of 1995, no persons are required to respond to a collection of information unless it contains a valid OMB control number.

Substitute for form 1449/PTO

INFORMATION DISCLOSURE STATEMENT BY APPLICANT

(use as many sheets as necessary)

Sheet 2 of 2

Complete if Known	
Application Number	16/375,879
Filing Date	April 5, 2019
First Named Inventor	Michael J. Koss
Art Unit	2641
Examiner Name	Kiet M. Doan
Attorney Docket Number	080188PCTUSCON10

FOREIGN PATENT DOCUMENTS

Examiner Initials*	Cite No.[1]	Foreign Patent Document: Country Code[3]-Number[4]-Kind Code[5] (*if known*)	Publication Date MM-DD-YYYY	Name of Patentee or Applicant of Cited Document	Pages, Columns, Lines, Where Relevant Passages or Relevant Figures Appear	T[6]
		JP 2008-67258 A	03-21-2008	Audio Technica Corp		

Examiner Signature		Date Considered	

*EXAMINER: Initial if reference considered, whether or not citation is in conformance with MPEP 609. Draw line through citation if not in conformance and not considered. Include copy of this form with next communication to applicant. [1] Applicant's unique citation designation number (optional). [2] See Kinds Codes of USPTO Patent Documents at www.uspto.gov or MPEP 901.04. [3] Enter Office that issued the document, by the two-letter code (WIPO Standard ST.3). [4] For Japanese patent documents, the indication of the year of the reign of the Emperor must precede the serial number of the patent document. [5] Kind of document by the appropriate symbols as indicated on the document under WIPO Standard ST.16 if possible. [6] Applicant is to place a check mark here if English language Translation is attached.

This collection of information is required by 37 CFR 1.97 and 1.98. The information is required to obtain or retain a benefit by the public which is to file (and by the USPTO to process) an application. Confidentiality is governed by 35 U.S.C. 122 and 37 CFR 1.14. This collection is estimated to take 2 hours to complete, including gathering, preparing, and submitting the completed application form to the USPTO. Time will vary depending upon the individual case. Any comments on the amount of time you require to complete this form and/or suggestions for reducing this burden, should be sent to the Chief Information Officer, U.S. Patent and Trademark Office, P.O. Box 1450, Alexandria, VA 22313-1450. DO NOT SEND FEES OR COMPLETED FORMS TO THIS ADDRESS. **SEND TO: Commissioner for Patents, P.O. Box 1450, Alexandria, VA 22313-1450.**

If you need assistance in completing the form, call 1-800-PTO-9199 (1-800-786-9199) and select option 2.

Espacenet

Bibliographic data: JP2008067258 (A) — 2008-03-21

WIRELESS HEADPHONE AND WIRELESS HEADPHONE SYSTEM

Inventor(s): KATSUNO GAKUJITSU; WADA ARIKATSU; KIMURA MASANORI ± (KATSUNO GAKUJITSU, ; WADA ARIKATSU, ; KIMURA MASANORI)

Applicant(s): AUDIO TECHNICA KK ± (AUDIO TECHNICA CORP)

Classification: **- international:** ***H04R1/06; H04R1/10; H04R3/00***
- cooperative:

Application number: JP20060245159 20060911 Global Dossier

Priority number(s): JP20060245159 20060911

Abstract of JP2008067258 (A)

PROBLEM TO BE SOLVED: To obtain a headphone constituted so that original volume can be recovered gradually from a state where the volume is narrowed down, when sound is interrupted by a radio connection defect and connected again thereafter. ;SOLUTION: A wireless headphone system comprises a digital radio receiver 21 for receiving an audio signal transmitted from a player 10, a buffer memory 22 for storing received audio signals, a D/A converter 23 for converting an audio signal read from the buffer memory 22 into an analog signal, and an electro-acoustic transducer 24 for converting the analog signal into audio. The system further comprises a connection detection unit 25 for detecting connection normality or defect of the digital radio transceiver, a volume control unit 27 for controlling the volume of sound outputted from the electro-acoustic transducer 24, and a control unit 26 which controls the volume control unit 27 to reduce the volume when the connection detection unit 25 detects a connection defect, and controls the volume control unit 27 to sequentially recover the volume in the detection of the connection defect when the connection detection unit 25 detects the connection normality thereafter. ;COPYRIGHT: (C)2008,JPO&INPIT

(19)日本国特許庁(JP)　(12)公開特許公報(A)　(11)特許出願公開番号
特開2008-67258
(P2008-67258A)
(43)公開日　平成20年3月21日(2008.3.21)

(51)Int.Cl.			F I			テーマコード（参考）
H04R	1/10	(2006.01)	H04R	1/10	101B	5D005
H04R	1/06	(2006.01)	H04R	1/06	310	5D017
H04R	3/00	(2006.01)	H04R	3/00	310	5D020

審査請求 未請求　請求項の数 8　OL　（全 13 頁）

(21)出願番号　特願2006-245159 (P2006-245159)
(22)出願日　平成18年9月11日 (2006.9.11)

（特許庁注：以下のものは登録商標）
1．Ｂｌｕｅｔｏｏｔｈ

(71)出願人　000128566
株式会社オーディオテクニカ
東京都町田市成瀬２２０６番地
(74)代理人　100088856
弁理士　石橋　佳之夫
(72)発明者　勝野　学実
東京都町田市成瀬２２０６番地　株式会社オーディオテクニカ内
(72)発明者　和田　存功
東京都町田市成瀬２２０６番地　株式会社オーディオテクニカ内
(72)発明者　木村　雅徳
東京都町田市成瀬２２０６番地　株式会社オーディオテクニカ内

Ｆターム(参考)　5D005 BB08

最終頁に続く

(54)【発明の名称】ワイヤレスヘッドホンおよびワイヤレスヘッドホンシステム

(57)【要約】
【課題】無線による接続不良によって音声が途絶え、その後再び接続されとき、音量が絞られた状態から徐々にもとの音量に戻すようにしたヘッドホンを得る。
【解決手段】再生装置１０から送信される音声信号を受信するデジタル無線受信部２１、受信される音声信号を蓄えるバッファメモリ２２、バッファメモリ２２から読み出される音声信号をアナログ信号に変換するＤ／Ａ変換部２３、アナログ信号を音声に変換する電気音響変換器２４を備える。デジタル無線送受信部の接続正常または不良を検出する接続検出部２５、電気音響変換器２４から出力される音声の音量を調節する音量調節部２７、接続検出部２５が接続不良を検出したとき音量を低下させるように音量調節部２７を制御し、その後接続検出部２５が接続正常を検出したとき、接続不良を検出したときの音量まで順次戻すように音量調節部２７を制御する制御部２６を備えている。
【選択図】図１

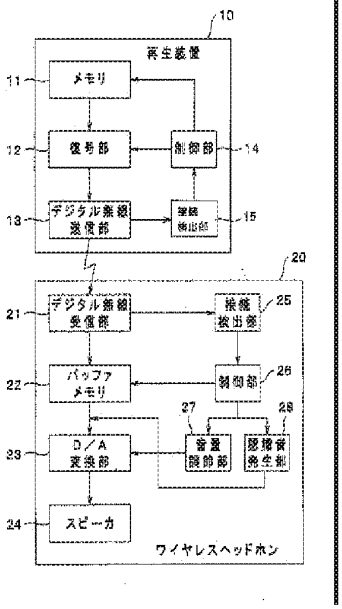

【特許請求の範囲】
【請求項1】
再生装置側からデジタル無線信号で送信される音声信号を受信するデジタル無線受信部と、
デジタル無線受信部で受信される音声信号を一時的に蓄えるバッファメモリと、
バッファメモリから読み出される音声信号をアナログ信号に変換するＤ／Ａ変換部と、
Ｄ／Ａ変換部で変換されるアナログ信号を音声に変換する電気音響変換器と、を備えるワイヤレスヘッドホンであって、
デジタル無線受信部と再生装置側のデジタル無線送信部との接続が正常かまたは接続不良かを検出する接続検出部と、
電気音響変換器から出力される音声の音量を調節する音量調節部と、
接続検出部が接続不良を検出したとき音量を低下させるように音量調節部を制御し、その後接続検出部が接続正常を検出したとき、接続不良を検出したときの音量まで順次戻すように音量調節部を制御する制御部を備えていることを特徴とするワイヤレスヘッドホン。
【請求項2】
接続検出部が接続不良を検出したとき、制御部の制御によって接続不良を認識させるための認識音を電気音響変換器から出力させる認識音発生部をさらに備えている請求項１記載のワイヤレスヘッドホン。
【請求項3】
再生装置側からデジタル無線信号で送信される音声信号を受信するデジタル無線送受信部と、
ワイヤレスヘッドホン側のデジタル無線送受信部で受信される音声信号を一時的に蓄えるバッファメモリと、
バッファメモリから読み出される音声信号をアナログ信号に変換するＤ／Ａ変換部と、
Ｄ／Ａ変換部で変換されるアナログ信号を音声に変換する電気音響変換器と、を備えるワイヤレスヘッドホンであって、
再生装置側のデジタル無線送信部と上記デジタル無線受信部との接続が正常かまたは接続不良かを検出する接続検出部と、
接続検出部が接続不良を検出したときバッファメモリによる音声信号の読み出しを停止させて再生を一時停止させ、その後接続検出部が接続正常を検出したとき、バッファメモリによる音声信号の読み出しを、接続不良検出時の音声信号に続けて再開させる制御部を備えていることを特徴とするワイヤレスヘッドホン。
【請求項4】
接続検出部が接続不良を検出したとき、制御部の制御によって接続不良を認識させるための認識音を電気音響変換器から出力させる認識音発生部をさらに備えている請求項３記載のワイヤレスヘッドホン。
【請求項5】
電気音響変換器から出力される音声の音量を調節する音量調節部をさらに有し、制御部は、接続検出部が接続不良を検出したとき音量を低下させるように音量調節部を制御し、その後接続検出部が接続正常を検出したとき、接続不良を検出したときの音量まで順次戻すように音量調節部を制御する請求項３記載のワイヤレスヘッドホン。
【請求項6】
携帯電話に内蔵されていて予め記録されている音声信号を再生する再生装置と、
携帯電話からデジタル無線信号で送信される音声信号を受信するデジタル無線受信部と、
デジタル無線受信部で受信される音声信号を一時的に蓄えるバッファメモリと、
バッファメモリから読み出される音声信号をアナログ信号に変換するＤ／Ａ変換部と、
Ｄ／Ａ変換部で変換されるアナログ信号を音声に変換する電気音響変換器と、を備える

ワイヤレスヘッドホンであって、
携帯電話が通話中であるか非通話かを検出する通話検出部と、
通話検出部が通話を検出したときバッファメモリによる音声信号の読み出しを停止させて再生を一時停止させ、その後通話検出部が非通話を検出したとき、バッファメモリによる音声信号の読み出しを、一時停止時の音声信号に続けて再開させる制御部を備えていることを特徴とするワイヤレスヘッドホン。
【請求項7】
携帯電話側のデジタル無線送信部と上記デジタル無線受信部相互の接続が正常かまたは接続不良かを検出する接続検出部をさらに備え、
制御部は、接続検出部が接続不良を検出したときバッファメモリによる音声信号の読み出しを停止させて再生を一時停止させ、その後接続検出部が接続正常を検出したとき、バッファメモリによる音声信号の読み出しを、一時停止時の音声信号に続けて再開させる請求項６記載のワイヤレスヘッドホン。
【請求項8】
音声信号の再生装置と、再生装置側からデジタル無線信号で送信される音声信号を受信して音声に変換するヘッドホンからなるワイヤレスヘッドホンシステムであって、
ヘッドホンは、再生装置側からデジタル無線信号で送信される音声信号を受信するデジタル無線送受信部と、ワイヤレスヘッドホン側のデジタル無線送受信部で受信される音声信号を一時的に蓄えるバッファメモリと、バッファメモリから読み出される音声信号をアナログ信号に変換するＤ／Ａ変換部と、Ｄ／Ａ変換部で変換されるアナログ信号を音声に変換する電気音響変換器を備え、
再生装置は、再生装置側のデジタル無線送信部と上記デジタル無線受信部との接続が正常かまたは接続不良かを検出する接続検出部と、接続検出部が接続不良を検出したとき再生を一時停止させ、その後上記接続検出部が接続正常を検出したとき、接続不良検出時の音声信号に続けて音声信号の読み出しを再開させる制御部を備えていることを特徴とするワイヤレスヘッドホンシステム。
【発明の詳細な説明】
【技術分野】
【0001】
本発明は、音声信号の再生装置から無線で送信されるデジタル音声信号を受信し、音声に変換するワイヤレスヘッドホンおよびワイヤレスヘッドホンシステムに関するもので、特に、無線による通信に不具合がある場合に、ユーザーに不愉快な思いをさせないように工夫を施したものである。
【背景技術】
【0002】
ヘッドホンは、テープレコーダ、ＣＤプレーヤ、ＭＤプレーヤ、ＭＰＥＧ方式プレーヤなどの音声再生器などの音源装置に接続して個人的に音声を聞くものである。しかし、音源装置とヘッドホンとの間をコードあるいはワイヤ（以下「ワイヤ」という）で接続すると、ワイヤがわずらわしく、取り扱いが面倒であることから、ワイヤをなくして音源装置からヘッドホンに無線によって音声信号を送信するワイヤレスヘッドホンが市販されている。また、近年では、デジタル無線通信規格であるＢｌｕｅｔｏｏｔｈに基づいて音声信号を送受信するものが普及しつつある。
【0003】
図７は、一般的なワイヤレスヘッドホンおよび音源装置のイメージを示す。図７において、コンピュータ５５はデジタル化された音声データファイルを保存していて、音声データファイルを読み出すことによって音源装置として機能する。読み出された音声データは送信機５６から無線によって送信される。また、携帯電話５７も同様に音声データファイルを保存することができるようになっていて、音声データファイルを読み出すことによって音源装置として機能し、読み出された音声データは送信部５８から無線によって送信される。送信機５６または送信部５８から送信される電波はワイヤレスヘッドホン５２が内蔵している受信機５３で受信され、音声信号に復調されてワイヤレスヘッドホン５２が備

えているスピーカを音声信号で駆動し、スピーカから音声が出力されるように構成されている。

【0004】

ワイヤレスヘッドホンの通信可能な距離には限度がある。図６は通信可能な距離のイメージを示すもので、例えば、Ｂｌｕｅｔｏｏｔｈ規格に基づく無線通信手段の接続可能な範囲は送信機５１から１０ｍ程度の範囲で、それ以上離れると接続不良になる。図６において、符号６０は通信可能な範囲を示している。ＡＶ機器５０は、オーディオ・ビデオ信号をデジタル信号の形態で記録し再生することができる音源装置である。この音源装置で再生された音声信号は、送信機５１からＢｌｕｅｔｏｏｔｈなどの所定の通信規格に基づいて電波に乗せられて送信される。ヘッドホン５２は上記電波を受信することができる受信機を備えていて、前述のとおり受信した電波から音声信号に復調し、内蔵のスピーカを音声信号によって駆動する。ヘッドホン５２が無線通信手段の接続可能範囲６０内にあれば音声信号に従った音声をスピーカから出力することができるが、接続可能範囲６０から外れると音声信号が途絶えてスピーカから音声を出力することができない。再びヘッドホン５２が接続可能範囲６０内に入ると、再びヘッドホン５２のスピーカから音声が出力される。

【0005】

このような従来のワイヤレスヘッドホンには、以下のような問題点がある。

１．無線による接続不良によって音声が途絶えた後、再び接続されたとき、接続不良となった時点での音量で再び音声が出力されるため、大音量で音声を出力していた場合には、再接続時に突然大音量で音声が出力され、ユーザーを驚かせ、あるいはユーザーを難聴にするなどの不具合がある。

２．接続不良となっても、音源側での音声出力は継続して行なわれるため、再接続されて出力される音声は、途絶えたときの音声との連続性がなく、ユーザーは接続不良の間の音声を聞き逃すことになる。音楽を聴いている場合、その他、例えば朗読や語学学習をしていた場合は、途中が途切れることになるため、音声を聞くことの価値が低下することになり、望ましくない。

【発明の開示】

【発明が解決しようとする課題】

【0006】

そこで本発明の第１の目的は、ワイヤレスヘッドホンにおいて、無線による接続不良によって音声が途絶え、その後再び接続されとき、音量が絞られた状態から徐々にもとの音量になるように、いわゆるフェードインさせることができるヘッドホンを提供することである。

本発明の第２の目的は、無線による接続不良によって音声が途絶えると、音声信号の読み出しを停止し、再び接続されとき、停止していた音声の読み出しを停止時点から連続性をもたせて再開させるようにしたワイヤレスヘッドホンおよびワイヤレスヘッドホンシステムを提供することである。

【0007】

なお、ワイヤレスヘッドホンに関連のある従来技術として、再生装置本体から送信されてくる音曲データをワイヤレスヘッドホン側のデジタル無線受信部で受信し、受信した音曲データを一時的にバッファメモリに蓄積し、蓄積した音曲データをバッファメモリから読み出し、Ｄ／Ａ変換部でアナログデータに変換し、このアナログデータによりスピーカを駆動して音波に変換する技術が提案されている（例えば、特許文献１参照）。特許文献１記載の発明が上記のように構成される理由は、無線での通信時に外乱が入ると、通信が途絶えて再生音が途切れるので、あるいは、圧縮データを再生する場合、データ処理で遅延するため、バッファメモリにデータを蓄積して、これを順次読み出すことにより、再生音の途切れを無くすためである。

【0008】

特許文献１記載の発明と略同じ目的で、オーディオサーバのブルートゥースモジュール

から受信したパケットを順次格納するバッファを有し、バッファに所定数のパケットが格納された後、その後に受信されるパケットをバッファに格納しながらバッファ内の受信パケットを順にデコードしてリアルタイムデータを再生して音声を出力し、バッファ内のパケットが０となったとき、データの再生を停止するとともに、その後の受信パケットを廃棄し、その後、所定時間電波の強度が所定の強度を越えたとき、受信データパケットのバッファへの格納を再開するようにした技術が提案されている（例えば、特許文献２参照）。

【0009】

【特許文献1】特開２００３－２８０６９３号公報

【特許文献2】特開２００５－３４８２２６号公報

【0010】

特許文献１および特許文献２記載の発明はいずれも、無線による通信が途絶えても、ヘッドホンからの音声出力が途絶えないようにバッファメモリを介在させるものである。

しかし、特許文献１および特許文献２におけるバッファメモリはあくまでも一時的にデータを蓄積するものであるから、通信が途絶えている時間がある程度以上になると音声信号を出力することができなくなる。したがって、その後通信が再開して音声出力が再開されるとき、通信が途絶えたときの音量で突然音声出力され、前述のような本発明の目的を達成することはできない。また、特許文献１および特許文献２記載の発明によれば、通信が再開して音声出力が再開された時点では、通信が途絶えた時点での音声とは連続性のない、先に進んだ音声が出力されることになり、ユーザーは途中が切断された音声しか聴くことができない。よって、前述のような本発明の目的を達成することはできない。

【課題を解決するための手段】

【0011】

本発明は、前述の目的を達成するために、再生装置側からデジタル無線信号で送信される音声信号を受信するデジタル無線受信部と、デジタル無線受信部で受信される音声信号を一時的に蓄えるバッファメモリと、バッファメモリから読み出される音声信号をアナログ信号に変換するＤ／Ａ変換部と、Ｄ／Ａ変換部で変換されるアナログ信号を音声に変換する電気音響変換器と、を備えるワイヤレスヘッドホンであって、デジタル無線受信部と再生装置側のデジタル無線送信部との接続が正常かまたは接続不良かを検出する接続検出部と、電気音響変換器から出力される音声の音量を調節する音量調節部と、接続検出部が接続不良を検出したとき音量を低下させるように音量調節部を制御し、その後接続検出部が接続正常を検出したとき、接続不良を検出したときの音量まで順次戻すように音量調節部を制御する制御部を備えていることを最も主要な特徴とする。

【0012】

本発明はまた、再生装置側からデジタル無線信号で送信される音声信号を受信するデジタル無線受信部と、ワイヤレスヘッドホン側のデジタル無線受信部で受信される音声信号を一時的に蓄えるバッファメモリと、バッファメモリから読み出される音声信号をアナログ信号に変換するＤ／Ａ変換部と、Ｄ／Ａ変換部で変換されるアナログ信号を音声に変換する電気音響変換器と、を備えるワイヤレスヘッドホンであって、再生装置側のデジタル無線送信部と上記デジタル無線受信部との接続が正常かまたは接続不良かを検出する接続検出部と、接続検出部が接続不良を検出したときバッファメモリによる音声信号の読み出しを停止させて再生を一時停止させ、その後接続検出部が接続正常を検出したとき、バッファメモリによる音声信号の読み出しを、接続不良検出時の音声信号に続けて再開させる制御部を備えていることを主要な特徴とする。

再生装置側に接続検出部を備え、接続検出部が接続不良を検出したとき再生を一時停止させ、その後上記接続検出部が接続正常を検出したとき、接続不良検出時の音声信号に続けて音声信号の読み出しを再開させるようにしたワイヤレスヘッドホンシステムを構成してもよい。

【発明の効果】

【0013】

本発明にかかるワイヤレスヘッドホンによれば、ヘッドホン側のデジタル無線受信部と再生装置側のデジタル無線送信部とが接続不良になると音量が低下し、その後接続検出部が接続正常を検出すると、接続不良を検出したときの音量まで順次戻され、いわゆるフェードインするため、再生装置とヘッドホンとの無線による接続不良で音声が途切れたあと、接続が回復したときに、接続不良となった時点での音量で急激に音声出力が再開されることがなくなる。したがって、大音量で音声を出力していた場合には、再接続時に突然大音量で音声が出力され、ユーザーを驚かせ、あるいはユーザーを難聴にするなどの不具合をなくすことができる。

【0014】

本発明にかかるワイヤレスヘッドホンの別の態様またはワイヤレスヘッドホンシステムによれば、再生装置とヘッドホンとが無線による接続不良になると、バッファメモリからの音声信号の読み出しを停止し、再び接続されたとき、停止していた音声信号の読み出しを停止時点から再開させるため、音声出力が連続性をもって再開され、音声を聞き逃すという不具合をなくすことができる。

【発明を実施するための最良の形態】

【0015】

以下、本発明にかかるワイヤレスヘッドホンおよびワイヤレスヘッドホンシステムの実施例について図面を参照しながら説明する。

【0016】

まず、本発明にかかるワイヤレスヘッドホンのハードウエア構成例について図１の機能ブロック図を参照しながら説明する。図１において、符号１０で示す大きなブロックは再生装置を、符号２０で示す大きなブロックはワイヤレスヘッドホンを示している。この例における再生装置１０は、例えばＭＰ３規格で圧縮されたデジタル信号からなる音声信号をフラッシュメモリなどからなるメモリに保存し、これを読み出して復号し、デジタル無線信号として送信するものである。したがって、再生装置１０は、音声信号を所定の形式に圧縮して予め保存することができる例えばフラッシュメモリからなるメモリ１１と、メモリ１１から読み出される音声信号を圧縮前の音声に戻す復号部１２と、復号される音声信号を電波に乗せて外部に送信するデジタル無線送信部１３と、後で説明するワイヤレスヘッドホン２０側のデジタル無線受信部２１との接続が正常かまたは接続不良かを検出する接続検出部１５と、この接続検出部１５の検出信号に応じて上記メモリ１１、復号部１２、デジタル無線送信部１３の動作を制御する制御部１４を備えている。再生装置１０は、メモリ１１に代わるコンパクトディスク（ＣＤ）、ミニディスク（ＭＤ）などの記録媒体と、これらの記録媒体を駆動して記録情報を読み出すようにした機械的な駆動部を備える再生装置であってもよい。

上記制御部１４は、接続検出部１５の検出結果、すなわち、再生装置１０側のデジタル無線送信部１３とワイヤレスヘッドホン２０側のデジタル無線受信部２１相互の接続が正常であるかまたは接続不良であるかに基づいて、メモリ１１からの読み出し動作と復号部１２の動作を制御する。具体的には、接続検出部１５が接続不良を検出したとき、音声信号の再生動作すなわち図示の例ではメモリ１１による音声信号の読み出しを停止させるようになっている。その後接続検出部１５が接続正常を検出したとき、制御部１４はメモリ１１に再生再開命令を発し、メモリ１１による音声信号の読み出しを再開させるように構成されている。制御部１４による以上のような制御動作は、予め組み込まれているソフトウエアにしたがって行われる。

【0017】

ワイヤレスヘッドホン２０は、上記再生装置１０のデジタル無線送信部１３からの無線による信号を受信するデジタル無線受信部２１と、デジタル無線受信部２１で受信される音声信号を一時的に蓄えるバッファメモリ２２と、バッファメモリ２２から読み出される音声信号をアナログ信号に変換するＤ／Ａ変換部２３と、Ｄ／Ａ変換部２３で変換されるアナログ信号を音声に変換する電気音響変換器としてのスピーカ２４を備えている。Ｄ／Ａ変換部２３とワイヤレスヘッドホン２０はまた、再生装置１０側のデジタル無線送信部

１３とスピーカ２４の間には、通常、上記アナログ信号を増幅してスピーカ２４を駆動する増幅器が介在しているが、図１では図示されていない。ワイヤレスヘッドホン２０側には、再生装置のデジタル無線送信部１３とワイヤレスヘッドホン２０側のデジタル無線受信部２１相互の接続が正常かまたは接続不良かを検出する接続検出部２５を備えている。さらに、制御部２６と、スピーカ２４から出力される音声の音量を調節する音量調節部２７と、接続不良を認識させるための認識音をスピーカ２４から出力させる認識音発生部２８を備えている。

【0018】

上記制御部２６は、接続検出部２５の検出結果、すなわち、再生装置１０側のデジタル無線送信部１３とワイヤレスヘッドホン２０側のデジタル無線受信部２１相互の接続が正常であるかまたは接続不良であるかに基づいて、音量調節部２７と認識音発生部２８の動作を制御する。制御部２６はまた、接続検出部２５が接続不良を検出したとき、バッファメモリ２２に再生一時停止命令を発し、バッファメモリ２２による音声信号の読み出しを停止させるようになっている。その後接続検出部２５が接続正常を検出したとき、制御部２５はバッファメモリ２２に再生再開命令を発し、バッファメモリ２２による音声信号の読み出しを再開させるように構成されている。制御部２６による以上のような制御動作は、予め組み込まれているソフトウエアにしたがって行われる。

【0019】

前記音量調節部２７は、結果としてスピーカ２４から出力される音声の音量を調節することができればよく、例えば、Ｄ／Ａ変換部２３によるアナログ変換前のデジタル信号で調節するようにしてもよいし、変換されたアナログ信号のレベルを調節するようにしてもよい。認識音発生部２８は、再生装置１０とヘッドホン２０の無線による接続状態が不良であることをユーザーに認識させるためのもので、例えば、「ぷっ、ぷっ、ぷっ」というような警報音をスピーカ２４から流すようになっている。その具体的な手段は任意であるが、図１に示す例では、上記のような警報音をデジタルデータで保存しておき、これを必要な場合に、すなわち制御部２６から命令された場合に読み出してＤ／Ａ変換部２３に入力するようになっている。デジタルデータからなる警報音はＤ／Ａ変換部２３でアナログによる音声信号に変換され、スピーカ２４から音声として出力される。

【0020】

以上説明したハードウエア構成において、ワイヤレスヘッドホン２０の制御部２６に組み込まれるソフトウエアの構成により、ワイヤレスヘッドホン２０として、さまざまな機能をもたせることができる。以下、各種機能をもった各種実施例について図２ないし図５を参照しながら説明する。図２ないし図５において、各動作ステップを、Ｓ１，Ｓ２，・・・のように表している。

【実施例】

【0021】

図２はワイヤレスヘッドホンの実施例を示す。図２において、ワイヤレスヘッドホン２０側では、接続検出部２５が、再生装置１０のデジタル無線送信部１３とヘッドホン１０側のデジタル無線受信部２１相互の接続が正常かまたは接続不良かを検出する（Ｓ１）。正常であればその状態を維持する。再生装置１０とヘッドホン２０との距離が大きく離れるなどの理由によって接続検出部２５が接続不良を検出すると、制御部２６が音量調節部２７に音量低下処理を行わせ（Ｓ２）、スピーカ２４から出力されるべき音声のレベルを低下させる。接続不良であるから、再生装置１０からの音声信号も伝達されず、スピーカ２４から音声が出力されることもない。接続検出部２５はさらにデジタル無線送受信部１３、２１相互の接続状態を監視し（Ｓ３）、接続不良状態が続いていれば、スピーカ２４から出力されるべき音声のレベルを低下させた状態を維持する。接続が正常な状態に回復すれば、制御部２６がデジタル無線受信部２１と再生装置側のデジタル無線送信部１３との再接続処理を行わせ（Ｓ４）、さらに、音量調節部２７に音量復帰処理を行わせる（Ｓ５）。音量復帰処理は、音声レベルを低下させた状態から、上記接続不良を検出した時点における音声レベルまで徐々にあるいは段階的に復帰させる処理で、これによっていわゆ

るフェードインすることになる。
　よって、図２に示す実施例によれば、前に述べた本発明の第１の目的を達成することができる。
【実施例】
【0022】
　次に、第２の実施例について、図３を参照しながら説明する。図３において、ワイヤレスヘッドホン２０の接続検出部２５は、再生装置１０のデジタル無線送信部１３とヘッドホン１０側のデジタル無線受信部２１相互の接続が正常かまたは接続不良かを検出する（Ｓ１１）。正常であればその状態を維持する。接続検出部２５が接続不良を検出すると、制御部２６がバッファメモリ２２に向けて再生一時停止指令を出す（Ｓ１２）。バッファメモリ２２は再生一時停止指令によって音声信号の読み出しを停止する。接続検出部２５はデジタル無線送受信部１３とデジタル無線送受信部２１相互の接続が正常かまたは接続不良かを検出し続け（Ｓ１３）、接続不良でなければ、すなわち、再び正常に接続されれば、制御部２６はデジタル無線受信部２１と再生装置側のデジタル無線送信部１３との再接続処理を行わせる（Ｓ１４）。制御部２６はさらに、バッファメモリ２２に対する再生一時停止指令の出力を停止して音声信号の読み出しを再開し、Ｄ／Ａ変換部２３、スピーカ２４によって音声の再生を再開する（Ｓ１５）。
【0023】
　上記実施例２によれば、再生装置１０側のデジタル無線送信部１３とヘッドホン２０側のデジタル無線受信部２１との接続が正常かまたは接続不良かを検出する接続検出部２５と、接続検出部２５が接続不良を検出したときバッファメモリ２２による音声信号の読み出しを停止させて再生を一時停止させ、その後接続検出部２５が接続正常を検出したとき、バッファメモリ２２による音声信号の読み出しを、接続不良検出時の音声信号に続けて再開させる制御部２６を備えているため、前に述べた本発明の第２の目的を達成することができる。
【実施例】
【0024】
　次に、第３の実施例について、図４を参照しながら説明する。図４において、ワイヤレスヘッドホン２０の接続検出部２５は、再生装置１０のデジタル無線送信部１３とヘッドホン１０側のデジタル無線受信部２１相互の接続が正常かまたは接続不良かを検出する（Ｓ２１）。正常であればその状態を維持する。接続検出部２５が接続不良を検出すると、制御部２６が、バッファメモリ２２に向けて再生一時停止指令を出し（Ｓ２２）、認識音発生部２８に向けて認識音発生指令を出し（Ｓ２３）、音量調節部２７に向けて音量低下指令を出す（Ｓ２４）。上記再生一時停止指令によって、バッファメモリ２２は音声信号の読み出しを停止する。上記認識音発生指令によって、認識音発生部２８はデジタル無線送受信部が接続不良であることを表す、例えば、「ぷっ、ぷっ、ぷっ」というような警報音のデジタル化信号をＤ／Ａ変換部２３に入力し、これをＤ／Ａ変換部２３がアナログ信号に変換してスピーカ２４から流す。上記音量低下指令により音量調節部２７がＤ／Ａ変換部２３から出力される音声信号レベル低下させ、スピーカ２４から出力されるべき音声のレベルを低下させる。
【0025】
　接続検出部２５はデジタル無線送信部１３とデジタル無線受信部２１相互の接続が正常かまたは接続不良かを検出し続け（Ｓ２５）、接続不良でなければ、すなわち、再び正常に接続されれば、制御部２６はデジタル無線受信部２１に再生装置側のデジタル無線受信部１３との再接続処理を行わせる（Ｓ２６）。制御部２６はまた、バッファメモリ２２に対する再生一時停止指令の出力を停止して音声信号の読み出しを再開し、Ｄ／Ａ変換部２３、スピーカ２４によって音声の再生を再開する（Ｓ２７）。さらに、制御部２６は音量調節部２７に音量復帰処理を行わせる（Ｓ２８）。前に説明したように、音量復帰処理は、音声レベルを低下させた状態から、上記接続不良を検出した時点における音声レベルまで徐々にあるいは段階的に復帰させる処理である。

【0026】
実施例３によれば、本発明の第１の目的および第２の目的を達成することができるほか、接続不良の場合に警報音を出力するため、ユーザーは、再生が停止された場合に、その原因が無線送受信部の接続不良ないしは接続停止にあることがわかる。
【実施例】
【0027】
次に、第４の実施例について図５を参照しながら説明する。この実施例は、携帯電話が再生装置１０を兼ねている例で、再生装置で再生中に通話が開始された場合にも、再生を一時停止させるようにしたことを特徴とするものである。図５において、再生装置１０が音声信号を再生中に、ワイヤレスヘッドホン２０の接続検出部２５は、再生装置１０がわとヘッドホン１０側のデジタル無線送受信部１３、２１相互の接続が正常かまたは接続不良かを検出する（Ｓ３０）。接続不良の場合は、実施例２の場合と同様に、制御部２６がバッファメモリ２２に向けて再生一時停止指令を出す（Ｓ３１）。バッファメモリ２２は再生一時停止指令によって音声信号の読み出しを停止する。接続検出部２５はデジタル無線送信部１３とデジタル無線受信部２１相互の接続が正常かまたは接続不良かを検出し続け（Ｓ３２）、接続不良でなければ、すなわち、再び正常に接続されれば、制御部２６はデジタル無線受信部２１に再生装置側のデジタル無線送信部１３との再接続処理を行わせる（Ｓ３３）。制御部２６はさらに、バッファメモリ２２に対する再生一時停止指令を停止して音声信号の読み出しを再開し、Ｄ／Ａ変換部２３、スピーカ２４によって音声の再生を再開する（Ｓ３４）。
【0028】
ステップＳ３０において、接続検出部２５が接続正常であることを検出すると、次に携帯電話が通話中であるか非通話であるかを検出し（Ｓ３５）、通話中でないすなわち非通話であれば、ステップ３０に戻って再生を継続する。ステップＳ３５において通話中であることを検出すると、制御部２６はバッファメモリ２２に向けて再生一時停止指令を出し（Ｓ３６）、バッファメモリ２２は再生一時停止指令によって音声信号の読み出しを停止して再生を一時停止する。その後通話終了を待ち（Ｓ３７）、通話が終了すると（非通話になると）、再生再開処理すなわちバッファメモリ２２からの音声信号の読み出しを、一時停止時の音声信号に続けて再開させる（Ｓ３４）。
【0029】
実施例４によれば、再生装置１０を携帯電話が兼ねているワイヤレスヘッドホンにおいて、携帯電話として通話中は再生を一時停止し、通話が終了すると、再生再開処理すなわちバッファメモリ２２からの音声信号の読み出しを、一時停止時の音声信号に続けて再開させるようになっているため、音声出力が連続性をもって再開され、バッファメモリ２２から読み出される音声信号による再生出力を、通話によって聞き逃すという不具合をなくすことができる。
【0030】
再生装置１０のデジタル無線送信部１３とワイヤレスヘッドホン２０のデジタル無線受信部２１相互が接続不良になった場合、再生装置１０側では接続検出部１５が接続不良を検出する。再生装置１０側の制御部１４は接続検出部１５の検出信号によってメモリ１１による読み出し動作の一時停止命令を出す。上記デジタル無線送信部１３とデジタル無線受信部２１が再び正常に接続されれば、制御部１４はメモリ１１に対する読み出し一時停止指令の出力を停止して音声信号の読み出しを再開し、デジタル無線送信部１３からワイヤレスヘッドホン２０に向けて音声信号を無線で送信する。ワイヤレスヘッドホン２０側の動作は前述のとおりである。よって、一時停止時と再生再開時の音声信号が連続することになり、ユーザーが途中を聞き逃すことはない。上記メモリ１１は、ＣＤプレーヤー、ＭＤプレーヤーなどに代替することができ、これらの再生動作、一時停止、再生再開動作が、制御部１４からの命令によって行われる。ここで説明した実施例は、デジタル無線送受信部の接続不良検出によって再生装置側の再生動作を一時停止させるようにしたもので、再生装置１０とワイヤレスヘッドホン２０双方の構成を組み合わせたワイヤレスヘッド

ホンシステムとして捉えることができる。

【0031】

図１に示すハード構成例において、音量調節部２７は、結果的に電気音響変換素子としてのスピーカ２４から出力される音量を調節することができればよく、Ｄ／Ａ変換部２３の入力側、したがってデジタル信号の段階で音量を調節するようにしてもよいし、Ｄ／Ａ変換部２３の出力側、したがってアナログ信号に変換された後音量を調節するようにしてもよい。同様に、認識音発生部２８も、デジタル信号で認識音を発生させてＤ／Ａ変換部２３に入力させてもよいし、アナログ信号で認識音を発生させてスピーカ２４またはその前段の図示されない増幅器に入力させてもよい。

【図面の簡単な説明】

【0032】

【図1】本発明にかかるワイヤレスヘッドホンの実施例のハード構成を示す機能ブロック図である。

【図2】本発明にかかるワイヤレスヘッドホンの実施例１を示すフローチャートである。

【図3】本発明にかかるワイヤレスヘッドホンの実施例２を示すフローチャートである。

【図4】本発明にかかるワイヤレスヘッドホンの実施例３を示すフローチャートである。

【図5】本発明にかかるワイヤレスヘッドホンの実施例４を示すフローチャートである。

【図6】一般的なワイヤレスヘッドホンおよび再生装置と無線による接続状態および接続不良状態のイメージを示す概念図である。

【図7】一般的なワイヤレスヘッドホンおよび音源装置の概念図である。

【符号の説明】

【0033】

１０　再生装置
１３　デジタル無線送信部
１４　制御部
２０　ワイヤレスヘッドホ
２１　デジタル無線受信部
２２　バッファメモリ
２３　Ｄ／Ａ変換部
２４　電気音響変換器であるスピーカ
２５　接続検出部
２６　制御部
２７　音量溶接部
２８　認識音発生部

【図1】

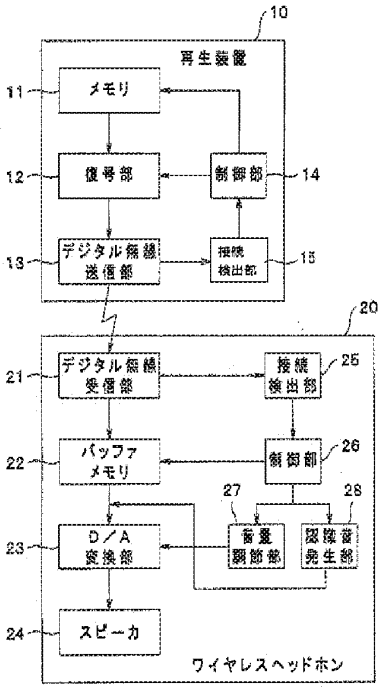
10
再生装置
11
メモリ
12
復号部
制御部
14
13
デジタル無線送信部
接続検出部
15
20
デジタル無線受信部
接続検出部
25
21
22
バッファメモリ
制御部
26
27
28
23
D／A変換部
音量調節部
認識音発生部
24
スピーカ
ワイヤレスヘッドホン

【図2】

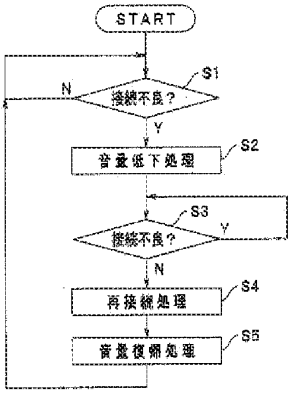
START
S1
N
接続不良？
Y
音量低下処理
S2
S3
接続不良？
Y
N
再接続処理
S4
音量復帰処理
S5

【図3】

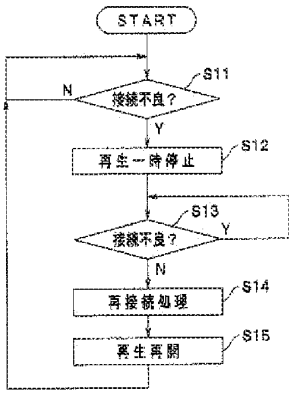
START
S11
N
接続不良？
Y
再生一時停止
S12
S13
接続不良？
Y
N
再接続処理
S14
再生再開
S15

【図4】

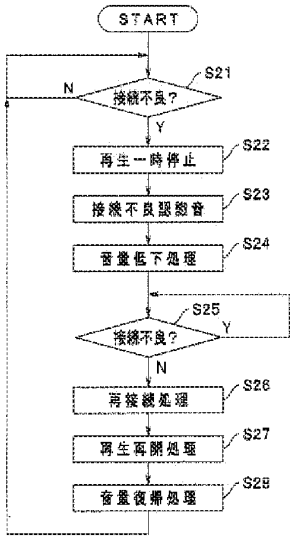
START
S21
N
接続不良？
Y
再生一時停止
S22
接続不良認識音
S23
音量低下処理
S24
S25
接続不良？
Y
N
再接続処理
S26
再生再開処理
S27
音量復帰処理
S28

【図5】

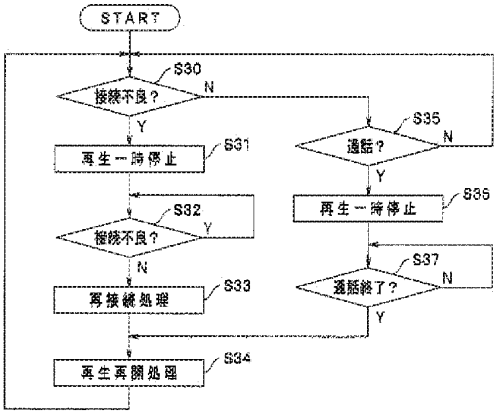
START
S30
接続不良？
N
Y
S31
再生一時停止
S32
接続不良？
Y
N
S33
再接続処理
S34
再生再開処理
S35
通話？
N
Y
S36
再生一時停止
S37
通話終了？
N
Y

【図6】

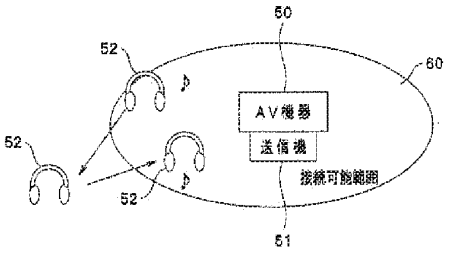
50
52
60
AV機器
送信機
52
52
接続可能範囲
51

【図7】

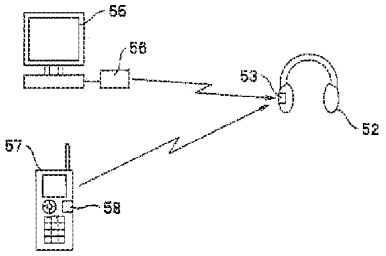
55
56
53
52
57
58

Ｆターム(参考)　5D017　AH10
　　5D020　AC01

Electronic Patent Application Fee Transmittal					
Application Number:	16375879				
Filing Date:	05-Apr-2019				
Title of Invention:	SYSTEM WITH WIRELESS EARPHONES				
First Named Inventor/Applicant Name:	Michael J. Koss				
Filer:	Mark G. Knedeisen/Amanda Kernan				
Attorney Docket Number:	080188PCTUSCON10				
Filed as Small Entity					
Filing Fees for **Utility under 35 USC 111(a)**					
Description		**Fee Code**	**Quantity**	**Amount**	**Sub-Total in USD($)**
Basic Filing:					
Pages:					
Claims:					
Miscellaneous-Filing:					
Petition:					
Patent-Appeals-and-Interference:					
Post-Allowance-and-Post-Issuance:					
Extension-of-Time:					

Description	Fee Code	Quantity	Amount	Sub-Total in USD($)
Miscellaneous:				
SUBMISSION- INFORMATION DISCLOSURE STMT	2806	1	120	120
		Total in USD ($)		**120**

Electronic Acknowledgement Receipt	
EFS ID:	36909300
Application Number:	16375879
International Application Number:	
Confirmation Number:	1056
Title of Invention:	SYSTEM WITH WIRELESS EARPHONES
First Named Inventor/Applicant Name:	Michael J. Koss
Customer Number:	26285
Filer:	Mark G. Knedeisen/Amanda Kernan
Filer Authorized By:	Mark G. Knedeisen
Attorney Docket Number:	080188PCTUSCON10
Receipt Date:	19-AUG-2019
Filing Date:	05-APR-2019
Time Stamp:	12:12:45
Application Type:	Utility under 35 USC 111(a)

Payment information:

Submitted with Payment	yes
Payment Type	DA
Payment was successfully received in RAM	$120
RAM confirmation Number	E20198IC13039903
Deposit Account	021818
Authorized User	Amanda Kernan
The Director of the USPTO is hereby authorized to charge indicated fees and credit any overpayment as follows: 37 CFR 1.16 (National application filing, search, and examination fees) 37 CFR 1.17 (Patent application and reexamination processing fees)	

File Listing:

Document Number	Document Description	File Name	File Size(Bytes)/ Message Digest	Multi Part /.zip	Pages (if appl.)
1		8-19-2019-Supplemental-IDS.pdf	223446 83f5c5e67643c06a24e4d6ec08cd0594a4961a9a	yes	3
	Multipart Description/PDF files in .zip description				
	Document Description		**Start**	**End**	
	Transmittal Letter		1	1	
	Information Disclosure Statement (IDS) Form (SB08)		2	3	
Warnings:					
Information:					
2	Foreign Reference	JP2008067258A-with-English-abstract.pdf	8449221 4802e59cccdb2d9ed0ffcbcaff008d333482b0aa	no	14
Warnings:					
Information:					
3	Fee Worksheet (SB06)	fee-info.pdf	30545 082f55a72ae41d8a01b98bc3d346455f31a72000	no	2
Warnings:					
Information:					
		Total Files Size (in bytes):	8703212		

This Acknowledgement Receipt evidences receipt on the noted date by the USPTO of the indicated documents, characterized by the applicant, and including page counts, where applicable. It serves as evidence of receipt similar to a Post Card, as described in MPEP 503.

New Applications Under 35 U.S.C. 111

If a new application is being filed and the application includes the necessary components for a filing date (see 37 CFR 1.53(b)-(d) and MPEP 506), a Filing Receipt (37 CFR 1.54) will be issued in due course and the date shown on this Acknowledgement Receipt will establish the filing date of the application.

National Stage of an International Application under 35 U.S.C. 371

If a timely submission to enter the national stage of an international application is compliant with the conditions of 35 U.S.C. 371 and other applicable requirements a Form PCT/DO/EO/903 indicating acceptance of the application as a national stage submission under 35 U.S.C. 371 will be issued in addition to the Filing Receipt, in due course.

New International Application Filed with the USPTO as a Receiving Office

If a new international application is being filed and the international application includes the necessary components for an international filing date (see PCT Article 11 and MPEP 1810), a Notification of the International Application Number and of the International Filing Date (Form PCT/RO/105) will be issued in due course, subject to prescriptions concerning national security, and the date shown on this Acknowledgement Receipt will establish the international filing date of the application.

IN THE UNITED STATES PATENT AND TRADEMARK OFFICE

Applicant:	Koss Corporation		
Inventors:	Michael J. Koss et al.	**Examiner:**	Kiet M. Doan
Serial No.:	16/375,879	**Art Unit:**	2641
Filing Date:	April 5, 2019	**Atty. Docket No.**	080188PCTUSCON10

Title: SYSTEM WITH WIRELESS EARPHONES

SUPPLEMENTAL INFORMATION DISCLOSURE STATEMENT

Mail Stop Amendment
Commissioner for Patents
P.O. Box 1450
Alexandria, VA 22313-1450

Dear Commissioner:

Applicant, in accordance with its duty of disclosure pursuant to 37 C.F.R. § 1.56, hereby advises the United States Patent and Trademark Office of the references listed on the accompanying form PTO/SB/08.

Applicant notes that although the cited references may be relevant to the examination of the above-referenced application, under 37 C.F.R. § 1.97(h), the filing of this *Information Disclosure Statement* "shall not be construed to be an admission that the information cited in the statement is, or is considered to be, material to patentability as defined in § 1.56(b)." Applicant further notes that the filing of this *Information Disclosure Statement* is not an admission that the references cited herein constitutes prior art under 35 U.S.C. §§ 102-103 with respect to the captioned application.

As an Office Action has issued with respect to the referenced application, the Commissioner is hereby authorized to charge the appropriate fee(s) to Account No. 02-1818 for considering this Information Disclosure Statement.

Respectfully submitted,

Date: August 19, 2019

/Mark G. Knedeisen/
Mark G. Knedeisen
Reg. No. 42,747

K&L GATES LLP
K&L Gates Center
210 Sixth Avenue
Pittsburgh, Pennsylvania 15222

Ph. (412) 355-6342
Fax (412) 355-6501

Doc code: PET.OP.AGE
Description: Petition to make special based on age/health

PTO/SB/130 (01-19)
Approved for use through 11/30/2020. OMB 0651-0031
U.S. Patent and Trademark Office; U.S. DEPARTMENT OF COMMERCE
Under the Paperwork Reduction Act of 1995, no persons are required to respond to a collection of information unless it contains a valid OMB control number

PETITION TO MAKE SPECIAL BASED ON AGE FOR ADVANCEMENT OF EXAMINATION UNDER 37 CFR 1.102(c)(1)

Application Information

Application Number	16/375,879	Confirmation Number	1056	Filing Date	04/05/2019
Attorney Docket Number (optional)	080188PCTUSCON10	Art Unit	2641	Examiner	DOAN, KIET M
First Named Inventor	Michael J. Koss				
Title of Invention	SYSTEM WITH WIRELESS EARPHONES				

Attention: Office of Petitions

An application may be made special for advancement of examination upon filing of a petition showing that the applicant is 65 years of age, or more. No fee is required with such a petition. See 37 CFR 1.102(c)(1) and MPEP 708.02 (II).

APPLICANT HEREBY PETITIONS TO MAKE SPECIAL FOR ADVANCEMENT OF EXAMINATION IN THIS APPLICATION UNDER 37 CFR 1.102(c)(1) and MPEP 708.02 (II) ON THE BASIS OF THE APPLICANT'S AGE.

A grantable petition requires one of the following items:

(1) Statement by one named inventor in the application that he/she is 65 years of age, or more; or

(2) Certification by a registered attorney/agent having evidence such as a birth certificate, passport, driver's license, etc. showing one named inventor in the application is 65 years of age, or more.

Name of inventor who is 65 years of age, or older

Given Name	Middle Name	Family Name	Suffix
Michael	J.	Koss	

A signature of the applicant or representative is required in accordance with 37 CFR 1.33 and 11.18. Please see 37 CFR 1.4(d) for the format of the signature.

Select (1) or (2):

☐ (1) I am an inventor in this application and I am 65 years of age, or more.

☒ (2) I am an attorney or agent registered to practice before the Patent and Trademark Office, and I certify that I am in possession of evidence, and will retain such in the application file record, showing that the inventor listed above is 65 years of age, or more.

Signature	/Mark G. Knedeisen/	Date (YYYY-MM-DD)	August 5, 2019
Name	Mark G. Knedeisen	Registration Number	42,747

This collection of information is required by 37 CFR 1.102(c)(1). The information is required to obtain or retain a benefit by the public, which is to file (and by the USPTO to process) a petition to make special based on age for advancement of examination. Confidentiality is governed by 35 U.S.C. 122 and 37 CFR 1.14. This collection is estimated to take 2 hours to complete, including gathering, preparing, and submitting the completed form to the USPTO. Time will vary depending upon the individual case. Any comments on the amount of time you require to complete this form and/or suggestions for reducing this burden, should be sent to the Chief Information Officer, U.S. Patent and Trademark Office, U.S. Department of Commerce, P.O. Box 1450, Alexandria, VA 22313-1450. DO NOT SEND COMPLETED FORMS TO THE CHIEF INFORMATION OFFICER. **Submit completed forms electronically over EFS-Web, or mail to: Commissioner for Patents, P.O. Box 1450, Alexandria, VA 22313-1450.**

If you need assistance in completing the form, call 1-800-PTO-9199 and select option 2.

Electronic Acknowledgement Receipt	
EFS ID:	36785190
Application Number:	16375879
International Application Number:	
Confirmation Number:	1056
Title of Invention:	SYSTEM WITH WIRELESS EARPHONES
First Named Inventor/Applicant Name:	Michael J. Koss
Customer Number:	26285
Filer:	Jason R. Freeck/US Patent Mail
Filer Authorized By:	Jason R. Freeck
Attorney Docket Number:	080188PCTUSCON10
Receipt Date:	05-AUG-2019
Filing Date:	05-APR-2019
Time Stamp:	16:53:15
Application Type:	Utility under 35 USC 111(a)

Payment information:

Submitted with Payment	no

File Listing:

Document Number	Document Description	File Name	File Size(Bytes)/ Message Digest	Multi Part /.zip	Pages (if appl.)
1	Petition to make special based on Age/ Health	080188PCTUSCON10_Petition-Make-Special.pdf	160965 0ac30046b4be27f64c75dc5654d8878c3bd49c98	no	1

Warnings:

Information:	
Total Files Size (in bytes):	160965

This Acknowledgement Receipt evidences receipt on the noted date by the USPTO of the indicated documents, characterized by the applicant, and including page counts, where applicable. It serves as evidence of receipt similar to a Post Card, as described in MPEP 503.

New Applications Under 35 U.S.C. 111
If a new application is being filed and the application includes the necessary components for a filing date (see 37 CFR 1.53(b)-(d) and MPEP 506), a Filing Receipt (37 CFR 1.54) will be issued in due course and the date shown on this Acknowledgement Receipt will establish the filing date of the application.
National Stage of an International Application under 35 U.S.C. 371
If a timely submission to enter the national stage of an international application is compliant with the conditions of 35 U.S.C. 371 and other applicable requirements a Form PCT/DO/EO/903 indicating acceptance of the application as a national stage submission under 35 U.S.C. 371 will be issued in addition to the Filing Receipt, in due course.
New International Application Filed with the USPTO as a Receiving Office
If a new international application is being filed and the international application includes the necessary components for an international filing date (see PCT Article 11 and MPEP 1810), a Notification of the International Application Number and of the International Filing Date (Form PCT/RO/105) will be issued in due course, subject to prescriptions concerning national security, and the date shown on this Acknowledgement Receipt will establish the international filing date of the application.

UNITED STATES PATENT AND TRADEMARK OFFICE

UNITED STATES DEPARTMENT OF COMMERCE
United States Patent and Trademark Office
Address: COMMISSIONER FOR PATENTS
P.O. Box 1450
Alexandria, Virginia 22313-1450
www.uspto.gov

APPLICATION NUMBER	FILING OR 371(C) DATE	FIRST NAMED APPLICANT	ATTY. DOCKET NO./TITLE
16/375,879	04/05/2019	Michael J. Koss	080188PCTUSCON10

CONFIRMATION NO. 1056

26285
K&L GATES LLP-Pittsburgh
210 SIXTH AVENUE
PITTSBURGH, PA 15222-2613

PUBLICATION NOTICE

Title:SYSTEM WITH WIRELESS EARPHONES

Publication No.US-2019-0238970-A1
Publication Date:08/01/2019

NOTICE OF PUBLICATION OF APPLICATION

The above-identified application will be electronically published as a patent application publication pursuant to 37 CFR 1.211, et seq. The patent application publication number and publication date are set forth above.

The publication may be accessed through the USPTO's publically available Searchable Databases via the Internet at www.uspto.gov. The direct link to access the publication is currently http://www.uspto.gov/patft/.

The publication process established by the Office does not provide for mailing a copy of the publication to applicant. A copy of the publication may be obtained from the Office upon payment of the appropriate fee set forth in 37 CFR 1.19(a)(1). Orders for copies of patent application publications are handled by the USPTO's Public Records Division. The Public Records Division can be reached by telephone at (571) 272-3150 or (800) 972-6382, by facsimile at (571) 273-3250, by mail addressed to the United States Patent and Trademark Office, Public Records Division, Alexandria, VA 22313-1450 or via the Internet.

In addition, information on the status of the application, including the mailing date of Office actions and the dates of receipt of correspondence filed in the Office, may also be accessed via the Internet through the Patent Electronic Business Center at www.uspto.gov using the public side of the Patent Application Information and Retrieval (PAIR) system. The direct link to access this status information is currently https://portal.uspto.gov/pair/PublicPair. Prior to publication, such status information is confidential and may only be obtained by applicant using the private side of PAIR.

Further assistance in electronically accessing the publication, or about PAIR, is available by calling the Patent Electronic Business Center at 1-866-217-9197.

Office of Data Managment, Application Assistance Unit (571) 272-4000, or (571) 272-4200, or 1-888-786-0101

UNITED STATES PATENT AND TRADEMARK OFFICE

UNITED STATES DEPARTMENT OF COMMERCE
United States Patent and Trademark Office
Address: COMMISSIONER FOR PATENTS
P.O. Box 1450
Alexandria, Virginia 22313-1450
www.uspto.gov

APPLICATION NO.	FILING DATE	FIRST NAMED INVENTOR	ATTORNEY DOCKET NO.	CONFIRMATION NO.
16/375,879	04/05/2019	Michael J. Koss	080188PCTUSCON10	1056

26285 7590 06/28/2019

K&L GATES LLP-Pittsburgh
210 SIXTH AVENUE
PITTSBURGH, PA 15222-2613

EXAMINER	
DOAN, KIET M	

ART UNIT	PAPER NUMBER
2641	

NOTIFICATION DATE	DELIVERY MODE
06/28/2019	ELECTRONIC

Please find below and/or attached an Office communication concerning this application or proceeding.

The time period for reply, if any, is set in the attached communication.

Notice of the Office communication was sent electronically on above-indicated "Notification Date" to the following e-mail address(es):

USpatentmail@klgates.com

Office Action Summary	**Application No.** 16/375,879	**Applicant(s)** Koss et al.	
	Examiner KIET M DOAN	**Art Unit** 2641	**AIA (FITF) Status** No

-- The MAILING DATE of this communication appears on the cover sheet with the correspondence address --

Period for Reply

A SHORTENED STATUTORY PERIOD FOR REPLY IS SET TO EXPIRE 3 MONTHS FROM THE MAILING DATE OF THIS COMMUNICATION.

- Extensions of time may be available under the provisions of 37 CFR 1.136(a). In no event, however, may a reply be timely filed after SIX (6) MONTHS from the mailing date of this communication.
- If NO period for reply is specified above, the maximum statutory period will apply and will expire SIX (6) MONTHS from the mailing date of this communication.
- Failure to reply within the set or extended period for reply will, by statute, cause the application to become ABANDONED (35 U.S.C. § 133). Any reply received by the Office later than three months after the mailing date of this communication, even if timely filed, may reduce any earned patent term adjustment. See 37 CFR 1.704(b).

Status

1)☑ Responsive to communication(s) filed on 04/05/2019.

☐ A declaration(s)/affidavit(s) under **37 CFR 1.130(b)** was/were filed on _____.

2a)☐ This action is **FINAL.** 2b) ☑ This action is non-final.

3)☐ An election was made by the applicant in response to a restriction requirement set forth during the interview on _____; the restriction requirement and election have been incorporated into this action.

4)☐ Since this application is in condition for allowance except for formal matters, prosecution as to the merits is closed in accordance with the practice under *Ex parte Quayle*, 1935 C.D. 11, 453 O.G. 213.

Disposition of Claims*

5) ☑ Claim(s) 1-60 is/are pending in the application.

5a) Of the above claim(s) _____ is/are withdrawn from consideration.

6) ☐ Claim(s) _____ is/are allowed.

7) ☑ Claim(s) 1-60 is/are rejected.

8) ☐ Claim(s) _____ is/are objected to.

9) ☐ Claim(s) _____ are subject to restriction and/or election requirement

* If any claims have been determined allowable, you may be eligible to benefit from the **Patent Prosecution Highway** program at a participating intellectual property office for the corresponding application. For more information, please see http://www.uspto.gov/patents/init_events/pph/index.jsp or send an inquiry to **PPHfeedback@uspto.gov.**

Application Papers

10)☐ The specification is objected to by the Examiner.

11)☑ The drawing(s) filed on 04/05/2019 is/are: a)☑ accepted or b)☐ objected to by the Examiner.

Applicant may not request that any objection to the drawing(s) be held in abeyance. See 37 CFR 1.85(a).

Replacement drawing sheet(s) including the correction is required if the drawing(s) is objected to. See 37 CFR 1.121(d).

Priority under 35 U.S.C. § 119

12)☐ Acknowledgment is made of a claim for foreign priority under 35 U.S.C. § 119(a)-(d) or (f).

Certified copies:

a)☐ All b)☐ Some** c)☐ None of the:

1.☐ Certified copies of the priority documents have been received.

2.☐ Certified copies of the priority documents have been received in Application No. _____.

3.☐ Copies of the certified copies of the priority documents have been received in this National Stage application from the International Bureau (PCT Rule 17.2(a)).

** See the attached detailed Office action for a list of the certified copies not received.

Attachment(s)

1) ☑ Notice of References Cited (PTO-892)

2) ☑ Information Disclosure Statement(s) (PTO/SB/08a and/or PTO/SB/08b) Paper No(s)/Mail Date _____.

3) ☐ Interview Summary (PTO-413) Paper No(s)/Mail Date _____.

4) ☐ Other: _____.

DETAILED ACTION

Notice of Pre-AIA or AIA Status

The present application is being examined under the pre-AIA first to invent provisions.

Information Disclosure Statement

The information disclosure statement (IDS) submitted on 04/05/2019. The submission is in compliance with the provisions of 37 CFR 1.97. Accordingly, the information disclosure statement is being considered by the examiner.

Drawings

The drawings were received on 04/05/2019 these drawing are acceptable by the examiner.

Double Patenting

The nonstatutory double patenting rejection is based on a judicially created doctrine grounded in public policy (a policy reflected in the statute) so as to prevent the unjustified or improper timewise extension of the "right to exclude" granted by a patent and to prevent possible harassment by multiple assignees. A nonstatutory obviousness-type double patenting rejection is appropriate where the conflicting claims are not identical, but at least one examined application claim is not patentably distinct from the reference claim(s) because the examined application claim is either anticipated by, or would have been obvious over, the reference claim(s). See, e.g., *In re Berg*, 140 F.3d 1428, 46 USPQ2d 1226 (Fed. Cir. 1998); *In re Goodman*, 11 F.3d 1046, 29 USPQ2d 2010 (Fed. Cir. 1993); *In re Longi*, 759 F.2d 887, 225 USPQ 645 (Fed. Cir. 1985); *In re Van Ornum*, 686 F.2d 937, 214 USPQ 761 (CCPA 1982); *In re Vogel*, 422 F.2d 438, 164 USPQ 619 (CCPA 1970); and *In re Thorington*, 418 F.2d 528, 163 USPQ 644 (CCPA 1969).

A timely filed terminal disclaimer in compliance with 37 CFR 1.321(c) or 1.321(d) may be used to overcome an actual or provisional rejection based on a nonstatutory double patenting ground provided the conflicting application or patent either is shown to be commonly owned with this application, or claims an invention made as a result of activities undertaken within the scope of a joint research agreement.

Effective January 1, 1994, a registered attorney or agent of record may sign a terminal disclaimer. A terminal disclaimer signed by the assignee must fully comply with 37 CFR 3.73(b).

Claim 2 is rejected on the ground of nonstatutory obviousness-type double patenting as being unpatentable over claims 1, 14 and 30 of US Patent 8,190,203 B2; claims 1 and 5-6 of US Patent 8,571, 544 B2; claims 1, 10 and 13 of US Patent 9,049,502 B2; claim 1 of US Patent 8,655,420 B1; claim 1 of US Patent 9,438,987 B2; claims 1, 8 and 11 of US Patent 9,497,535 B1; claims 1-3 of US Patent 9,729,959 B2; claims 1-3 of US Patent 9,986,325 B2; claim 1 of US Patent 10,206,025 B2 . Although the conflicting claims are not identical, they are not patentably distinct from each other because claim 2 limitation are found in claims 1, 14 and 30 of US Patent 8,190,203 B2; claims 1 and 5-6 of US Patent 8,571, 544 B2; claims 1, 10 and 13 of US Patent 9,049,502 B2; claim 1 of US Patent 8,655,420 B1; claim 1 of US Patent 9,438,987 B2; claims 1, 8 and 11 of US Patent 9,497,535 B1; claims 1-3 of US Patent 9,729,959 B2; claims 1-3 of US Patent 9,986,325 B2; claim 1 of US Patent 10,206,025 B2 with obvious wording variation such as they all sets of claims are drawn to first and second earphones, wherein each of the first and second earphones comprises an acoustic transducer; an antenna for receiving wireless signals and playing digital audio content received wirelessly by the headphone.

It is important to note that claimed features recited in claims 1, 14 and 30 of US Patent 8,190,203 B2; claims 1 and 5-6 of US Patent 8,571,544 B2; claims 1, 10 and 13 of US Patent 9,049,502 B2; claim 1 of US Patent 8,655,420 B1; claim 1 of US Patent 9,438,987 B2; claims 1, 8 and 11 of US Patent 9,497,535 B1; claims 1-3 of US Patent

9,729,959 B2; claims 1-3 of US Patent 9,986,325 B2; claim 1 of US Patent 10,206,025 B2 are more specific than claimed features recited in claim 2 of the instant application. Hence, the scope of claims of present application is now broader than U.S. Patent No. 8,190,203; 8,571, 544; 9,049,502; 8,655,420; 9,438,987; 9,497,535; 9,729,959; 9,986,325 and 10,206,025

Many decisions support the fact that a broad or generic claim is obvious from a specific claim, i.e., an obvious variation. See In re Van Ornum and Stang, 214 USPQ 761 (CCPA 1982); In re Goodman (CA FC) 29 USPQ2d 2010 (12/3/1993); In re Vogel and Vogel; 164 USPQ 619 (CCPA 1970); In re Berg (CA FC) 46 USPQ2d 1226 (3/30/1998); Eli Lilly and Co. v. Barr Laboratories Inc., 58 USPQ2d 1865 (CA FC 2001). It is well settled that omission of an element and its function in a combination is an obvious expedient if the remaining elements perform the same functions as before. This notion is supported by In re KARLSON, 136 USPQ 184 (1963); In re Nelson, 95 USPQ 82 (CCPA 1952); and In re Eliot, 25 USPQ 111 (CCPA 1935).

Claim Rejections - 35 USC § 103

The following is a quotation of pre-AIA 35 U.S.C. 103(a) which forms the basis for all obviousness rejections set forth in this Office action:

> (a) A patent may not be obtained though the invention is not identically disclosed or described as set forth in section 102, if the differences between the subject matter sought to be patented and the prior art are such that the subject matter as a whole would have been obvious at the time the invention was made to a person having ordinary skill in the art to which said subject matter pertains. Patentability shall not be negatived by the manner in which the invention was made.

Claims 2, 3, 7-10 and 12-23 are rejected under pre-AIA 35 U.S.C. 103(a) as being unpatentable over Lair et al. (US 2009/0029743 A9) in view of Rezvani (US 2007/0136446 A1).

Regarding claim 2. Lair teaches a headphone assembly comprising:

first and second earphones, wherein each of the first and second earphones comprises an acoustic transducer; and an antenna for receiving wireless signals from a mobile, digital audio player via one or more ad hoc wireless communication links (Paragraphs 0030] fig.1B Illustrate and teach the headset 108 comprises an acoustic transducer, an antenna 106 receiving wireless signals from a mobile, digital audio player/communication device 102);

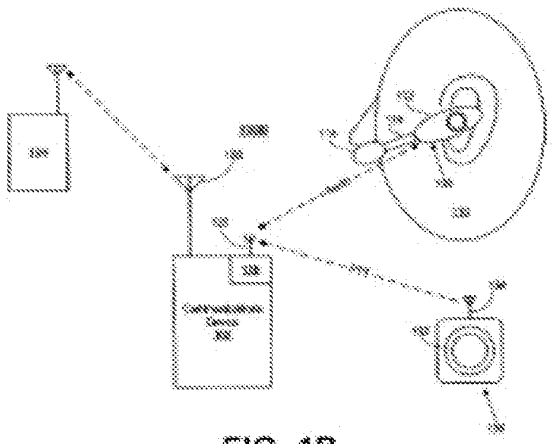

FIG. 1B

a wireless communication circuit connected to the antenna, wherein the wireless communication circuit is for receiving and transmitting wireless signals to and from the headphone assembly; a processor (Paragraph [0043], fig.3 Illustrate and teach headset contain antenna 310 for wireless communication and processor 306);

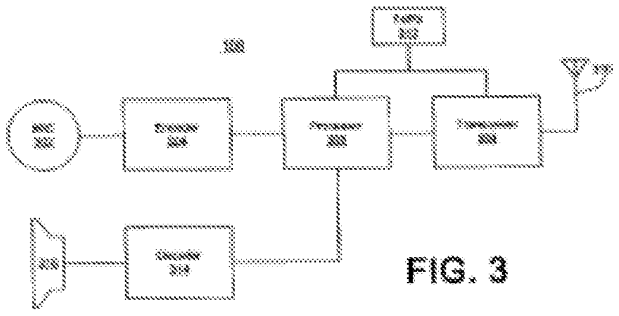

FIG. 3

a rechargeable battery for powering the headphone assembly (Paragraph [0058] teach induction link for rechargeable battery for powering the headphone); and a microphone for picking up utterances by a user of the headphone assembly (Paragraph [0028] teach headset contain microphone for input audio information from user);

and wherein the headphone assembly is configured to play, by the first and second earphones, digital audio content transmitted by the mobile, digital audio player via the one or more ad hoc wireless communication links (Paragraphs [0028], [0030], [0043], [0045-0046] teach headset received audio/video from the communication device 102).

Lair is silent on

wherein the processor is configured to, upon activation of a user-control of the headphone assembly, initiate transmission of a request to a remote, network-connected server that is in wireless communication with the mobile, digital audio player.

In an analogous art, Rezvani teaches

wherein the processor is configured to, upon activation of a user-control of the headphone assembly, initiate transmission of a request to a remote, network-connected server that is in wireless communication with the mobile, digital audio player

(Paragraphs [0055-0057], [0062] teach headset request audio from WPM server, wherein server provide music to headset).

Therefore, it would have been obvious to one of ordinary skill in the art before the effective filling date of the claimed invention was made to modify Lair with Rezvani's system such that earphones comprises an acoustic transducer; and an antenna for receiving wireless signals/audio, a rechargeable battery, a microphone for picking up utterances by a user of the headphone and initiate transmission of a request to a remote, network-connected server that is in wireless communication with the mobile, digital audio player in order to provide a multiple quality music to the headset and headset does not need to have storage to store music/songs.

Regarding claims 3, 13, 22, 31, 44. The combination of Lair and Rezvani teach the headphone assembly of claim 2, Lair teaches wherein: in a first audio play mode, the first and second earphones play audio content stored on a mobile, digital audio player and transmitted to the headphone assembly from the mobile, digital audio player via the one or more ad hoc wireless communication links (Paragraphs 0030] fig.1B Illustrate and described); and

Rezvani teach in a second audio play mode, the earphones play audio content streamed from the remote, network-connected server (Paragraph [0058]).

Regarding claims 4-5, 14-15, 23-24, 32-33, 45-46. The combination of Lair and Rezvani teach the headphone assembly of claim 2, Lair teaches wherein the processor is for: processing audible utterances by the user picked up by the microphone in response to activation of the microphone by the user; and transmitting a communication based on the audible utterances via the one or more ad hoc wireless communication links (Paragraphs [0028], [0030], [0043]).

Regarding claims 6, 16, 25, 34, 50. The combination of Lair and Rezvani teach the headphone assembly of claim 2, Lair teaches wherein upon activation of the microphone by the user, data are transmitted about the headphone assembly to a remote device (Paragraphs [0028], [0048]).

Regarding claims 7-10, 17-20, 26-29, 35-38, 49, 51-53. The combination of Lair and Rezvani teach the headphone assembly of claim 2, Lair teaches wherein: the mobile, digital audio player is a first digital audio source (fig.1 #102); the headphone assembly transitions to play digital audio content received wirelessly from a second digital audio source via a second wireless communication link based on, at least, a signal strength level for the second wireless communication link, wherein the second digital audio source is different from the first digital audio source (Paragraphs [0008], [0032]).

Regarding claims 11, 39, 54 and 60. The combination of Lair and Rezvani teach the headphone assembly of claim 2, Rezvani teach wherein the headphone assembly is for receiving firmware upgrades transmitted from the remote, network-connected server (Paragraph [0069]).

Regarding claims 12. The combination of Lair and Rezvani teach the headphone assembly of claim 3, Lair teaches wherein: the wireless communication circuit is located in the first earphone; and the headphone assembly further comprises a connection wire between the first and second earphones to carry the received digital audio content from the first earphone to the second earphone (Paragraphs [0041-0042]).

Regarding claims 21. The combination of Lair and Rezvani teach the headphone assembly of claim 12, Lair teaches wherein the headphone assembly further comprises a headband, and wherein the headband carries the connection wire (Paragraph [0042]).

Regarding claims 30, 47, 30. The combination of Lair and Rezvani teach the headphone assembly of claim 12, Lair teaches wherein each of the first and second earphones further comprises: an adjustable, curved hanger bar that sits upon an upper external curvature of the user's ear, behind an upper portion of an auricula of the user's ear, when the headphone assembly is worn by the user; and a body connected to the hanger bar, wherein the earphone extends from the body into the user's ear when the headphone assembly is worn by the user (Paragraph [0042, fig. 2D and fig.2e Illustrate and described).

Regarding claims 40 and 57. The combination of Lair and Rezvani teach the headphone assembly of claim 12, Lair teaches wherein each of the first and second earphones comprise earbuds (Paragraph [0042]).

Regarding claims 41, 55. The combination of Lair and Rezvani teach the headphone assembly of claim 2, Lair teaches wherein: the wireless circuit comprises first and second wireless circuit; the first wireless circuit is in the first earphone; and the second wireless circuit is in the second earphone (Paragraphs [0042-0043]).

Regarding claim 42. The combination of Lair and Rezvani teach the headphone assembly of claim 40, Lair teaches wherein each of the first and second earphones comprises: a body portion that sits at least partially in an ear of the user when the headphone assembly is worn by the user; and an elongated portion that extends from the body portion (fig.2D, 2E,, 2F and 2G Illustrate and described).

Regarding claims 58 and 59. The combination of Lair and Rezvani teach the headphone assembly of claim 2, Lair teaches wherein each of the first and second earphones comprise on-ear/over-ear speaker elements (Paragraph [0028], [0034])

Claims 43 and 48 are rejected under pre-AIA 35 U.S.C. 103(a) as being unpatentable over Lair et al. (US 2009/0029743 A9) in view of Rezvani (US 2007/0136446 A1) and further view of Goldman et al. (US 2011/0275323 A1).

Regarding claims 43 and 48. The combination of Lair and Rezvani teach the headphone assembly of claim 42, but is silent on wherein at least one of the first and second earphones is charged by a docking station.

In an analogous art, Goldman teaches wherein at least one of the first and second earphones is charged by a docking station (Paragraph [0058] fig.1 Illustrate and teach headset base unit as read on docking station).

Therefore, it would have been obvious to one of ordinary skill in the art before the effective filling date of the claimed invention was made to modify Lair and Rezvani with Goldman's system such that wherein at least one of the first and second earphones is charged by a docking station in order to provide saving cost by recharging the earphone and without using battery.

Conclusion

Any inquiry concerning this communication or earlier communications from the examiner should be directed to KIET M DOAN whose telephone number is (571)272-7863. The examiner can normally be reached on M-F 9:30am-5:30pm.

Examiner interviews are available via telephone, in-person, and video conferencing using a USPTO supplied web-based collaboration tool. To schedule an interview, applicant is encouraged to use the USPTO Automated Interview Request (AIR) at http://www.uspto.gov/interviewpractice.

If attempts to reach the examiner by telephone are unsuccessful, the examiner's supervisor, Charles Appiah can be reached on 571-272-7904. The fax phone number for the organization where this application or proceeding is assigned is 571-273-8300.

Information regarding the status of an application may be obtained from the Patent Application Information Retrieval (PAIR) system. Status information for published applications may be obtained from either Private PAIR or Public PAIR. Status information for unpublished applications is available through Private PAIR only. For more information about the PAIR system, see http://pair-direct.uspto.gov. Should you have questions on access to the Private PAIR system, contact the Electronic Business Center (EBC) at 866-217-9197 (toll-free). If you would like assistance from a USPTO Customer Service Representative or access to the automated information system, call 800-786-9199 (IN USA OR CANADA) or 571-272-1000.

/KIET M DOAN/
Primary Examiner, Art Unit 2641

Notice of References Cited	Application/Control No. 16/375,879	Applicant(s)/Patent Under Reexamination Koss et al.	
	Examiner KIET M DOAN	Art Unit 2641	Page 1 of 1

U.S. PATENT DOCUMENTS

*		Document Number Country Code-Number-Kind Code	Date MM-YYYY	Name	CPC Classification	US Classification
*	A	US-20090029743-A9	01-2009	Lair; John	H04M1/6066	455/569.1
*	B	US-20070136446-A1	06-2007	Rezvani; Behrooz	H04B7/0871	709/219
*	C	US-20110275323-A1	11-2011	Goldman; Tomasz	H04M1/04	455/41.2
	D					
	E					
	F					
	G					
	H					
	I					
	J					
	K					
	L					
	M					

FOREIGN PATENT DOCUMENTS

*		Document Number Country Code-Number-Kind Code	Date MM-YYYY	Country	Name	CPC Classification
	N					
	O					
	P					
	Q					
	R					
	S					
	T					

NON-PATENT DOCUMENTS

*		Include as applicable: Author, Title Date, Publisher, Edition or Volume, Pertinent Pages)
	U	
	V	
	W	
	X	

*A copy of this reference is not being furnished with this Office action. (See MPEP § 707.05(a).)
Dates in MM-YYYY format are publication dates. Classifications may be US or foreign.

Search Notes	Application/Control No.	Applicant(s)/Patent Under Reexamination
	16/375,879	Koss et al.
	Examiner	Art Unit
	KIET M DOAN	2641

CPC - Searched*		
Symbol	**Date**	**Examiner**
H04R2201/107	06/24/2019	KD
H04R3/00	06/24/2019	KD

CPC Combination Sets - Searched*		
Symbol	**Date**	**Examiner**

US Classification - Searched*			
Class	**Subclass**	**Date**	**Examiner**
455	466	06/24/2019	KD
	41.2	06/24/2019	KD
	556.1	06/24/2019	KD
	421	06/24/2019	KD
	569.1	06/24/2019	KD
	575.2	06/24/2019	KD
	553.1	06/24/2019	KD
381	58	06/24/2019	KD
	309	06/24/2019	KD
	74	06/24/2019	KD

* See search history printout included with this form or the SEARCH NOTES box below to determine the scope of the search.

/KIET M DOAN/ Primary Examiner, Art Unit 2641	

Search Notes	Application/Control No.	Applicant(s)/Patent Under Reexamination
	16/375,879	Koss et al.
	Examiner	Art Unit
	KIET M DOAN	2641

Search Notes		
Search Notes	**Date**	**Examiner**
Inventor search	06/24/2019	KD
East search	06/24/2019	KD
(earphone earcup headset headphone earbud (head near phone) (head near set)) with acoustic$1 and (earphone earcup headset headphone earbud (head near phone) (head near set)) with antenna$1 and @ad<" 20101010"	06/24/2019	KD
(earphone earcup headset headphone earbud (head near phone) (head near set)) with (transduc$3 acoustic$1) and (earphone earcup headset headphone earbud (head near phone) (head near set)) with antenna$1 and (earphone earcup headset headphone earbud (head near phone) (head near set)) with request$3 with (server$1 (base near station)) and @ad<"20101010"	06/24/2019	KD
((H04M1/6066 OR H04M1/2535 OR H04M1/72558 OR H04R2201/107 OR H04R25/554 OR H04R3/00 OR H04R5/033).CPC.)	06/24/2019	KD
((H04W4/70 OR H04W4/80 OR H04W8/005 OR H04W88/02 OR G06F3/167 OR G06F17/28 OR G06F17/27 OR G06F1/1605 OR H04B5/02 OR H04L2012/2841 OR H04L2012/2849 OR H04L65/1069).CPC.)	06/24/2019	KD

Interference Search			
US Class/CPC Symbol	**US Subclass/CPC Group**	**Date**	**Examiner**
381	57	06/24/2019	KD

/KIET M DOAN/ Primary Examiner, Art Unit 2641	

Index of Claims	Application/Control No.	Applicant(s)/Patent Under Reexamination
	16/375,879	Koss et al.
	Examiner	Art Unit
	KIET M DOAN	2641

✓	Rejected	-	Cancelled	N	Non-Elected	A	Appeal
=	Allowed	÷	Restricted	I	Interference	O	Objected

CLAIMS											
☐ Claims renumbered in the same order as presented by applicant					☐ CPA		☐ T.D.		☐ R.1.47		
CLAIM		DATE									
Final	Original	06/24/2019									
	1	✓									
	2	✓									
	3	✓									
	4	✓									
	5	✓									
	6	✓									
	7	✓									
	8	✓									
	9	✓									
	10	✓									
	11	✓									
	12	✓									
	13	✓									
	14	✓									
	15	✓									
	16	✓									
	17	✓									
	18	✓									
	19	✓									
	20	✓									
	21	✓									
	22	✓									
	23	✓									
	24	✓									
	25	✓									
	26	✓									
	27	✓									
	28	✓									
	29	✓									
	30	✓									
	31	✓									
	32	✓									
	33	✓									
	34	✓									
	35	✓									
	36	✓									
	37	✓									
	38	✓									
	39	✓									
	40	✓									
	41	✓									
	42	✓									

Index of Claims	Application/Control No.	Applicant(s)/Patent Under Reexamination
	16/375,879	Koss et al.
	Examiner	**Art Unit**
	KIET M DOAN	2641

CLAIM		DATE								
Final	Original	06/24/2019								
	43	✓								
	44	✓								
	45	✓								
	46	✓								
	47	✓								
	48	✓								
	49	✓								
	50	✓								
	51	✓								
	52	✓								
	53	✓								
	54	✓								
	55	✓								
	56	✓								
	57	✓								
	58	✓								
	59	✓								
	60	✓								

PTO/SB/08a (07-09)
Approved for use through 07/31/2012. OMB 0651-0031
U.S. Patent and Trademark Office; U.S. DEPARTMENT OF COMMERCE
Under the Paperwork Reduction Act of 1995, no persons are required to respond to a collection of information unless it contains a valid OMB control number.

Substitute for form 1449/PTO				Complete if Known	
INFORMATION DISCLOSURE STATEMENT BY APPLICANT				Application Number	
				Filing Date	04/05/2019
				First Named Inventor	Michael J. Koss
				Art Unit	
(use as many sheets as necessary)				Examiner Name	Kiet Doan
Sheet	1	of	4	Attorney Docket Number	080188PCTUSCON10

U.S. PATENT DOCUMENTS

Examiner Initials*	Cite No.[1]	Document Number Number - Kind Code[2] (*if known*)	Publication Date MM-DD-YYYY	Name of Patentee or Applicant of Cited Document	Pages, Columns, Lines, Where Relevant Passages or Relevant Figures Appear
		2004/0107271 A1	06-03-2004	Ahn et al.	
		2005/0064853 A1	03-25-2005	Radpour	
		2005/0198233 A1	09-08-2005	Manchester	
		2006/0206487 A1	09-14-2006	Harada	
		2006/0212442 A1	09-21-2006	Conrad	
		2006/0212444 A1	09-21-2006	Handman et al.	
		2006/0238878 A1	10-26-2006	Miyake	
		2006/0268830 A1	11-30-2006	Evans	
		2007/0008984 A1	01-11-2007	Phillips	
		2007/0037615 A1	02-15-2007	Glezerman	
		2007/0049198 A1	03-01-2007	Walsh et al.	
		2007/0053543 A1	03-08-2007	Lee	
		2007/0165875 A1	07-19-2007	Rezvani	
		2007/0297618 A1	12-27-2007	Nurmi et al.	
		2007/0253603 A1	11-01-2007	Kimura et al.	
		2008/0031470 A1	02-07-2008	Angelhag	
		2008/0062939 A1	03-13-2008	Van Horn	
		2008/0076489 A1	03-27-2008	Rosener et al.	
		2008/0019557 A1	01-24-2008	Bevirt et al.	
		2008/0242312 A1	10-02-2008	Paulson et al.	
		2008/0298606 A1	12-04-2008	Johnson et al.	
		2008/0311852 A1	12-18-2008	Hansen et al.	
		2009/0116678 A1	05-07-2009	Bevirt et al.	
		2009/0129605 A1	05-21-2009	Camp et al.	
		2009/0248178 A1	10-01-2009	Paulson et al	
		2010/0290642 A1	11-18-2010	Haseagawa	
		2013/0039510 A1	02-14-2013	Pelland et al.	
		2013/0099507 A1	04-25-2013	Moriya et al.	
		2015/0237439 A1	08-20-2015	Koss et al.	
		2017/0318378 A1	11-02-2017	Koss et al.	
		2018/0249240 A1	08-30-2018	Koss et al.	
		2019/0075390 A1	03-07-2019	Koss et al.	
		5,784,685 A	07-21-1998	Stanford et al.	
		6,389,463 B2	05-14-2002	Bolas	
		6,671,494 B1	12-30-2003	James	
		6,674,864 B2	01-06-2004	Kitamura	
		6,792,091 B2	09-14-2004	Lemchen et al.	
		6,937,712 B2	08-30-2005	Lemchen et al.	
		7,003,515 B2	02-21-2006	Glaser	
		7,027,311 B2	04-11-2006	Vanderelli	
		7,095,455 B2	08-22-2006	Jordan	
		7,099,370 B2	08-29-2006	Takahashi	

Examiner Signature	/KIET M DOAN/	Date Considered	06/24/2019

*EXAMINER: Initial if reference considered, whether or not citation is in conformance with MPEP 609. Draw line through citation if not in conformance and not considered. Include copy of this form with next communication to applicant. [1] Applicant's unique citation designation number (optional). [2] See Kinds Codes of USPTO Patent Documents at www.uspto.gov or MPEP 901.04. [3] Enter Office that issued the document, by the two-letter code (WIPO Standard ST.3). [4] For Japanese patent documents, the indication of the year of the reign of the Emperor must precede the serial number of the patent document. [5] Kind of document by the appropriate symbols as indicated on the document under WIPO Standard ST.16 if possible. [6] Applicant is to place a check mark here if English language Translation is attached.

This collection of information is required by 37 CFR 1.97 and 1.98. The information is required to obtain or retain a benefit by the public which is to file (and by the USPTO to process) an application. Confidentiality is governed by 35 U.S.C. 122 and 37 CFR 1.14. This collection is estimated to take 2 hours to complete, including gathering, preparing, and submitting the completed application form to the USPTO. Time will vary depending upon the individual case. Any comments on the amount of time you require to complete this form and/or suggestions for reducing this burden, should be sent to the Chief Information Officer, U.S. Patent and Trademark Office, P.O. Box 1450, Alexandria, VA 22313-1450. DO NOT SEND FEES OR COMPLETED FORMS TO THIS ADDRESS. **SEND TO: Commissioner for Patents, P.O. Box 1450, Alexandria, VA 22313-1450.**

If you need assistance in completing the form, call 1-800-PTO-9199 (1-800-786-9199) and select option 2.

ALL REFERENCES CONSIDERED EXCEPT WHERE LINED THROUGH. /K.M.D/

502163479 v1

PTO/SB/08a (07-09)
Approved for use through 07/31/2012. OMB 0651-0031
U.S. Patent and Trademark Office; U.S. DEPARTMENT OF COMMERCE

Under the Paperwork Reduction Act of 1995, no persons are required to respond to a collection of information unless it contains a valid OMB control number.

Substitute for form 1449/PTO

INFORMATION DISCLOSURE STATEMENT BY APPLICANT

(use as many sheets as necessary)

Sheet 2 of 4

Complete if Known	
Application Number	
Filing Date	04/05/2019
First Named Inventor	Michael J. Koss
Art Unit	
Examiner Name	Kiet doan
Attorney Docket Number	080188PCTUSCON10

U.S. PATENT DOCUMENTS

Examiner Initials*	Cite No.[1]	Document Number Number - Kind Code[2] (*if known*)	Publication Date MM-DD-YYYY	Name of Patentee or Applicant of Cited Document	Pages, Columns, Lines, Where Relevant Passages or Relevant Figures Appear
		7,120,388 B2	10-10-2006	Hall	
		7,139,585 B2	11-21-2006	Hachimura et al.	
		7,266,390 B2	09-04-2007	Mathews	
		7,337,027 B2	02-26-2008	Nishiguchi et al.	
		7,467,021 B2	12-16-2008	Yuen	
		7,512,414 B2	03-31-2009	Jannard et al.	
		7,599,679 B2	10-06-2009	Awiszus	
		7,650,168 B2	01-19-2010	Bailey	
		7,680,490 B2	03-16-2010	Bloebaum et al.	
		7,697,899 B2	04-13-2010	Rofougaran	
		7,734,055 B2	06-08-2010	Chiloyan	
		7,764,775 B2	07-27-2010	Tarkoff et al.	
		7,805,210 B2	09-28-2010	Cucos	
		7,861,312 B2	12-28-2010	Lee et al.	
		7,962,482 B2	06-14-2011	Handman	
		8,023,663 B2	09-20-2011	Goldberg	
		8,055,007 B2	11-08-2011	Kim	
		8,027,638 B2	09-27-2011	Sanguino	
		8,073,137 B2	12-06-2011	Weinans et al.	
		8,086,281 B2	12-27-2011	Rabu et al.	
		8,102,836 B2	01-24-2012	Jerlhagen	
		8,190,203 B2	05-29-2012	Pelland et al.	
		8,295,516 B2	10-23-2012	Kondo et al.	
		8,335,312 B2	12-18-2012	Gerhardt et al.	
		8,401,202 B2	03-19-2013	Brooking	
		8,478,880 B2	07-02-2013	Finkelstein et al.	
		8,483,755 B2	07-09-2013	Kumar	
		8,553,865 B2	10-08-2013	Menard et al.	
		8,571,544 B2	10-29-2013	Pelland et al.	
		8,655,420 B1	02-18-2014	Pelland et al.	
		8,792,945 B2	07-29-2014	Russell et al.	
		9,049,502 B2	06-02-2015	Pelland et al.	

Examiner Signature	/KIET M DOAN/	Date Considered	06/24/2019

*EXAMINER: Initial if reference considered, whether or not citation is in conformance with MPEP 609. Draw line through citation if not in conformance and not considered. Include copy of this form with next communication to applicant. [1] Applicant's unique citation designation number (optional). [2] See Kinds Codes of USPTO Patent Documents at www.uspto.gov or MPEP 901.04. [3] Enter Office that issued the document, by the two-letter code (WIPO Standard ST.3). [4] For Japanese patent documents, the indication of the year of the reign of the Emperor must precede the serial number of the patent document. [5] Kind of document by the appropriate symbols as indicated on the document under WIPO Standard ST.16 if possible. [6] Applicant is to place a check mark here if English language Translation is attached.

This collection of information is required by 37 CFR 1.97 and 1.98. The information is required to obtain or retain a benefit by the public which is to file (and by the USPTO to process) an application. Confidentiality is governed by 35 U.S.C. 122 and 37 CFR 1.14. This collection is estimated to take 2 hours to complete, including gathering, preparing, and submitting the completed application form to the USPTO. Time will vary depending upon the individual case. Any comments on the amount of time you require to complete this form and/or suggestions for reducing this burden, should be sent to the Chief Information Officer, U.S. Patent and Trademark Office, P.O. Box 1450, Alexandria, VA 22313-1450. DO NOT SEND FEES OR COMPLETED FORMS TO THIS ADDRESS. **SEND TO: Commissioner for Patents, P.O. Box 1450, Alexandria, VA 22313-1450.**

If you need assistance in completing the form, call 1-800-PTO-9199 (1-800-786-9199) and select option 2.

ALL REFERENCES CONSIDERED EXCEPT WHERE LINED THROUGH. /K.M.D/

PTO/SB/08a (07-09)
Approved for use through 07/31/2012. OMB 0651-0031
U.S. Patent and Trademark Office; U.S. DEPARTMENT OF COMMERCE
Under the Paperwork Reduction Act of 1995, no persons are required to respond to a collection of information unless it contains a valid OMB control number.

Substitute for form 1449/PTO

INFORMATION DISCLOSURE STATEMENT BY APPLICANT

(use as many sheets as necessary)

Sheet 3 of 4

Complete if Known	
Application Number	
Filing Date	04/05/2019
First Named Inventor	Michael J. Koss
Art Unit	
Examiner Name	Kiet Doan
Attorney Docket Number	080188PCTUSCON10

FOREIGN PATENT DOCUMENTS

Examiner Initials*	Cite No.[1]	Foreign Patent Document: Country Code[3]-Number[4]-Kind Code[5] (*if known*)	Publication Date MM-DD-YYYY	Name of Patentee or Applicant of Cited Document	Pages, Columns, Lines, Where Relevant Passages or Relevant Figures Appear	T[6]
		JP 2004-320597 (English Abstract)	11-11-2004	Matsushita Electric Ind. Co. Ltd.		
		WO 2006/047724 A2	05-04-2006	Logitech Europe S.A.		
		WO 2007/139578 A1	12-06-2007	Sony Ericsson Mobile Communications AB		
		WO 2007/136620 A2	11-29-2007	Autonet Mobile Inc.		
		WO 2008/033478 A1	03-20-2008	Reuss, et al.		
		WO 2008/054985 A2	05-08-2008	Motorola Inc.		
		WO 2009/086555 A1	07-09-2009	Koss Corporation		

Examiner Signature	/KIET M DOAN/	Date Considered	06/24/2019

*EXAMINER: Initial if reference considered, whether or not citation is in conformance with MPEP 609. Draw line through citation if not in conformance and not considered. Include copy of this form with next communication to applicant. [1] Applicant's unique citation designation number (optional). [2] See Kinds Codes of USPTO Patent Documents at www.uspto.gov or MPEP 901.04. [3] Enter Office that issued the document, by the two-letter code (WIPO Standard ST.3). [4] For Japanese patent documents, the indication of the year of the reign of the Emperor must precede the serial number of the patent document. [5] Kind of document by the appropriate symbols as indicated on the document under WIPO Standard ST.16 if possible. [6] Applicant is to place a check mark here if English language Translation is attached.

This collection of information is required by 37 CFR 1.97 and 1.98. The information is required to obtain or retain a benefit by the public which is to file (and by the USPTO to process) an application. Confidentiality is governed by 35 U.S.C. 122 and 37 CFR 1.14. This collection is estimated to take 2 hours to complete, including gathering, preparing, and submitting the completed application form to the USPTO. Time will vary depending upon the individual case. Any comments on the amount of time you require to complete this form and/or suggestions for reducing this burden, should be sent to the Chief Information Officer, U.S. Patent and Trademark Office, P.O. Box 1450, Alexandria, VA 22313-1450. DO NOT SEND FEES OR COMPLETED FORMS TO THIS ADDRESS. **SEND TO: Commissioner for Patents, P.O. Box 1450, Alexandria, VA 22313-1450.**

If you need assistance in completing the form, call 1-800-PTO-9199 (1-800-786-9199) and select option 2.

ALL REFERENCES CONSIDERED EXCEPT WHERE LINED THROUGH. /K.M.D/

PTO/SB/08b (07-09)
Approved for use through 07/31/2012. OMB 0651-0031
U.S. Patent and Trademark Office; U.S. DEPARTMENT OF COMMERCE
Under the Paperwork Reduction Act of 1995, no persons are required to respond to a collection of information unless it contains a valid OMB control number.

Substitute for form 1449/PTO				Complete if Known	
INFORMATION DISCLOSURE STATEMENT BY APPLICANT				Application Number	
				Filing Date	04/05/2019
				First Named Inventor	Michael J. Koss
				Art Unit	
(use as many sheets as necessary)				Examiner Name	Kiet Doan
Sheet	4	of	4	Attorney Docket Number	080188PCTUSCON10

NON PATENT LITERATURE DOCUMENTS			
Examiner Initials*	Cite No.[1]	Include name of the author (in CAPITAL LETTERS), title of the article (when appropriate), title of the item (book, magazine, journal, serial, symposium, catalog, etc.), date, page(s), volume-issue number(s), publisher, city and/or country where published.	T[2]
		Supplementary European Search Report for European Application No. 09731146.8 mailed June 10, 2011, 7 pages.	
		International Search Report for International Application No. PCT/US09/39754 mailed June 11, 2009, 2 pages.	
		International Preliminary Examination Report for International Application No. PCT/US09/39754 mailed October 28, 2010, 8 pages.	
		Written Opinion of the International Searching Authority for International Application No. PCT/US09/39754 mailed June 11, 2009, 5 pages.	
		IT REVIEW, "LTB 802.11 WiFi Headphones", http://itreview.belproject.com/item/1536 accessed on 03/13/2008 (4 pages).	

Examiner Signature	/KIET M DOAN/	Date Considered	06/24/2019

*EXAMINER: Initial if reference considered, whether or not citation is in conformance with MPEP 609. Draw line through citation if not in conformance and not considered. Include copy of this form with next communication to applicant.

[1] Applicant's unique citation designation number (optional). [2] Applicant is to place a check mark here if English language Translation is attached. This collection of information is required by 37 CFR 1.98. The information is required to obtain or retain a benefit by the public which is to file (and by the USPTO to process) an application. Confidentiality is governed by 35 U.S.C. 122 and 37 CFR 1.14. This collection is estimated to take 2 hours to complete, including gathering, preparing, and submitting the completed application form to the USPTO. Time will vary depending upon the individual case. Any comments on the amount of time you require to complete this form and/or suggestions for reducing this burden, should be sent to the Chief Information Officer, U.S. Patent and Trademark Office, P.O. Box 1450, Alexandria, VA 22313-1450. DO NOT SEND FEES OR COMPLETED FORMS TO THIS ADDRESS. **SENDTO: Commissioner for Patents, P.O. Box 1450, Alexandria, VA 22313-1450.**

If you need assistance in completing the form, call 1-800-PTO-9199 (1-800-786-9199) and select option 2.

ALL REFERENCES CONSIDERED EXCEPT WHERE LINED THROUGH. /K.M.D/

EAST Search History

EAST Search History (Prior Art)

Ref #	Hits	Search Query	DBs	Default Operator	Plurals	Time Stamp
L1	14	(earphone earcup headset headphone earbud (head near phone) (head near set)) with antenna$1 and (earphone earcup headset headphone earbud (head near phone) (head near set)) with request$3 with (server$1 (base near station)) and @ad<"20101010"	US-PGPUB; USPAT; USOCR	OR	ON	2019/06/24 10:45
L2	9	1 AND ((H04M1/6066 OR H04M1/2535 OR H04M1/72558 OR H04R2201/107 OR H04R25/554 OR H04R3/00 OR H04R5/033).CPC.)	US-PGPUB; USPAT; USOCR	OR	ON	2019/06/24 10:48
S1	2	(mobile wireless $4phone) with out near1 (rang$4 area) and (mobilw wireless pda $4phone) with automat$5 with (chang$3 convert$4 divert$4) with (ip internet digital$1)	USPAT	OR	OFF	2011/09/19 20:35
S2	10	(mobile wireless $4phone) with out near1 (rang$4 area) and (mobile wireless pda $4phone) with automat$5 with (chang$3 convert$4 divert$4) with (ip internet digital$1)	US-PGPUB; USPAT; USOCR; EPO; JPO; DERWENT	OR	OFF	2011/09/19 20:35
S3	0	(mobile wireless $4phone) with out near1 (rang$4 area) and (mobile wireless pda $4phone) with automat$5 with (chang$3 convert$4 divert$4) with (mode state) with network	US-PGPUB; USPAT; USOCR; EPO; JPO; DERWENT	OR	OFF	2011/09/19 20:42
S4	3	(mobile wireless $4phone) with out near1 (rang$4 area) and (mobile wireless pda $4phone) with automat$5 with (chang$3 convert$4 divert$4) with network	US-PGPUB; USPAT; USOCR; EPO; JPO; DERWENT	OR	OFF	2011/09/19 20:42
S5	11	(mobile wireless $4phone) with out near1 (rang$4 area) and automat$5 with (chang$3 convert$4 divert$4) with network	US-PGPUB; USPAT; USOCR; EPO; JPO; DERWENT	OR	OFF	2011/09/19 20:44
S6	872	(mobile wireless $4phone) with out near1 (rang$4 area) and (mobile wireless pda $4phone) with (chang$3 convert$4 divert$4) with network	US-PGPUB; USPAT; USOCR; EPO; JPO; DERWENT	OR	OFF	2011/09/19 20:45
S7	145	(mobile wireless $4phone) with out near1 (rang$4 area) and (mobile wireless pda $4phone) with (chang$3 convert$4 divert$4) with network with (internet digital)	US-PGPUB; USPAT; USOCR; EPO; JPO; DERWENT	OR	OFF	2011/09/19 20:45
S8	8	acoustic near transducer same (convert$3 chang$3) with (analog rf frequency signal$3) with (audio sound) and firmware	USPAT	OR	OFF	2011/09/19 21:30

S9	46	acoustic near transducer same (convert$3 chang$3) with (analog rf frequency signal$3) with (audio sound) and firmware	US-PGPUB; USPAT; USOCR; EPO; JPO; DERWENT	OR	OFF	2011/09/19 21:30
S10	2	"7697899".pn.	US-PGPUB; USPAT; USOCR; EPO; JPO; DERWENT	OR	OFF	2011/09/19 21:33
S11	130	(mobile wireless) same acoustic near transducer and (convert$3 chang$3) with (analog rf frequency signal$3) with (audio sound) and digital and (audio sound)	US-PGPUB; USPAT; USOCR; EPO; JPO; DERWENT	OR	OFF	2011/09/20 00:33
S12	25	S11 and stream$3 and server	US-PGPUB; USPAT; USOCR; EPO; JPO; DERWENT	OR	OFF	2011/09/20 00:33
S13	91	("20020069263" | "20040169581" | "2660662" | "3651471" | "3732536" | "3742463" | "3845391" | "4025851" | "4237449" | "4425642" | "4514725" | "4642685" | "4718106" | "4750034" | "4807031" | "4840602" | "4846693" | "4923428" | "4945412" | "5085610" | "5090936" | "5108341" | "5113437" | "5136613" | "5191615" | "5301167" | "5305348" | "5319735" | "5353352" | "5412620" | "5436941" | "5442343" | "5446756" | "5450490" | "5479442" | "5499265" | "5519779" | "5539705" | "5555258" | "5574773" | "5579124" | "5604767" | "5657379" | "5663766" | "5687191" | "5719937" | "5734639" | "5752880" | "5774452" | "5822360" | "5828325" | "5848155" | "5930369" | "5937000" | "5945932" | "5960398" | "5978413" | "5999899" | "6021432" | "6022273" | "6031914" | "6035177" | "6061793" | "6125172" | "6290566" | "6298322" | "6370666" | "6389055" | "6434253" | "6438117" | "6442283" | "6449596" | "6577881" | "6584138" | "6636551" | "6650877" | "6708214" | "6737957" | "6757300" | "6765950" | "6773344" | "6782253" | "6832093" | "6850555" | "6876623" | "6892175" | "6983051" | "7031271" | "7065342" | "7158676").PN.	US-PGPUB; USPAT; USOCR	OR	OFF	2011/09/20 00:35
S14	187	mbsfn and sfn	US-PGPUB; USPAT; USOCR; EPO; JPO; DERWENT	OR	OFF	2012/02/29 11:27
S15	1	12/031462	US-PGPUB; USPAT; USOCR; EPO; JPO; DERWENT	OR	OFF	2012/02/29 11:29

S16	0	(mobile wireless $4phone) with out near1 (rang$4 area) and transducer with (convert$3 chang$3 divert$3) with (sound audio) and (adhoc (ad adj hoc))	USPAT	OR	OFF	2012/02/29 12:11
S17	1	(mobile wireless $4phone) with out near1 (rang$4 area) and transducer with (convert$3 chang$3 divert$3) with (sound audio) and (adhoc (ad adj hoc))	US-PGPUB; USPAT; USOCR; FPRS; EPO; JPO; DERWENT; IBM_TDB	OR	OFF	2012/02/29 12:11
S18	2	(mobile wireless $4phone) and transducer with (convert$3 chang$3 divert$3) with (sound audio) and (adhoc (ad adj hoc)) and (signal$3 rf frequency) with threshold.clm.	US-PGPUB; USPAT; USOCR; FPRS; EPO; JPO; DERWENT; IBM_TDB	OR	OFF	2012/02/29 12:15
S19	19	(mobile wireless $4phone) and transducer with (convert$3 chang$3 divert$3) with (sound audio) and (adhoc (ad adj hoc)) and (signal$3 rf frequency) with threshold	US-PGPUB; USPAT; USOCR; FPRS; EPO; JPO; DERWENT; IBM_TDB	OR	OFF	2012/02/29 12:16
S20	20	transducer with (convert$3 chang$3 divert$3) with (sound audio) and (adhoc (ad adj hoc)) and (signal$3 rf frequency) with threshold	US-PGPUB; USPAT; USOCR; FPRS; EPO; JPO; DERWENT; IBM_TDB	OR	OFF	2012/02/29 12:17
S21	1003	(mobile wireless $4phone) and (adhoc (ad adj hoc)) and (signal$3 rf frequency) with threshold and "455"/$.ccls.	US-PGPUB; USPAT; USOCR; FPRS; EPO; JPO; DERWENT; IBM_TDB	OR	OFF	2012/02/29 12:20
S22	8	(mobile wireless $4phone) with (adhoc (ad adj hoc)) with (signal$3 rf frequency) with threshold and "455"/$.ccls.	US-PGPUB; USPAT; USOCR; FPRS; EPO; JPO; DERWENT; IBM_TDB	OR	OFF	2012/02/29 12:21
S23	38203	(mobile wireless $4phone) and transducer wand (convert$3 chang$3 divert$3) with (sound audio) and (adhoc (ad adj hoc)) and threshold and rang$3	USPAT	OR	OFF	2012/02/29 13:54
S24	258	(mobile wireless $4phone) and transducer and (convert$3 chang$3 divert$3) with (sound audio) and (adhoc (ad adj hoc)) and threshold and rang$3	US-PGPUB; USPAT; USOCR; FPRS; EPO; JPO; DERWENT; IBM_TDB	OR	OFF	2012/02/29 13:54
S25	21	(mobile wireless $4phone) and transducer and (convert$3 chang$3	US-PGPUB; USPAT;	OR	OFF	2012/02/29 13:55

		divert$3) with (sound audio) and (adhoc (ad adj hoc)) and threshold and rang$3.clm.	USOCR; FPRS; EPO; JPO; DERWENT; IBM_TDB			
S26	25	(mobile wireless $4phone) and transducer and (convert$3 chang$3 divert$3) with (sound audio) and (adhoc (ad adj hoc)) and threshold and rang$3 and "455"/$.ccls.	US-PGPUB; USPAT; USOCR; FPRS; EPO; JPO; DERWENT; IBM_TDB	OR	OFF	2012/02/29 13:59
S27	9	(mobile wireless $4phone) and transducer and (convert$3 chang$3 divert$3) with (sound audio) and (adhoc (ad adj hoc)) and threshold and rang$3 and earphone	US-PGPUB; USPAT; USOCR; FPRS; EPO; JPO; DERWENT; IBM_TDB	OR	OFF	2012/02/29 14:00
S28	1	(mobile wireless $4phone) and transducer and (convert$3 chang$3 divert$3) with (sound audio) and (adhoc (ad adj hoc)) and threshold and rang$3 and earphone.clm.	US-PGPUB; USPAT; USOCR; FPRS; EPO; JPO; DERWENT; IBM_TDB	OR	OFF	2012/02/29 14:03
S29	2	"8190203".pn.	US-PGPUB; USPAT; USOCR; EPO; JPO; DERWENT	OR	OFF	2013/03/21 23:39
S30	27	("20050064853" | "20050198233" | "20060206487" | "20060212442" | "20060212444" | "20070008984" | "20070037615" | "20070049198" | "20070116316" | "20070165875" | "20070230727" | "20080062939" | "20080101279" | "20080291891" | "20100246788" | "5784685" | "6792091" | "6937712" | "7003515" | "7027311" | "7099370" | "7120388" | "7139585" | "7599679" | "7697899" | "7764775" | "7805210").PN.	US-PGPUB; USPAT; USOCR	OR	ON	2013/03/29 14:23
S31	0	(server computer) with internet and stream$4 near audio near server and (headset earphone$1 bluetooth) with (ap (access near point)) with internet	US-PGPUB; USPAT; USOCR	OR	ON	2013/03/29 14:34
S32	41	(server computer) with internet and (stream$4 near audio) and server and (headset earphone$1 bluetooth) with (ap (access near point)) with internet	US-PGPUB; USPAT; USOCR	OR	ON	2013/03/29 14:35
S33	2287	host near server and internet and (stream$4 near audio) and server and (headset earphone$1 bluetooth) with (ap (access near point)) and register$3and approva$4 with (song media)	US-PGPUB; USPAT; USOCR	OR	ON	2013/03/29 14:52
S34	4	host near server and internet and (stream$4 near audio) and server and (headset earphone$1 bluetooth) with (ap (access near point)) and	US-PGPUB; USPAT; USOCR	OR	ON	2013/03/29 14:56

		register$3 and approva$4 with (song media)				
S35	4	host near server and internet and (stream$4 near audio) and server and (headset earphone$1 bluetooth) with (ap (access near point)) and approva$4 with (song media)	US-PGPUB; USPAT; USOCR	OR	ON	2013/03/29 14:57
S36	56	(earphone headset) with receiv$3 with (song audio music) and convert$4 near digital same analog and acoustic$1 with transducer$3	US-PGPUB; USPAT; EPO; JPO	OR	ON	2013/03/29 18:50
S37	769	(earphone headset) and convert$4 near3 digital with analog and acoustic$1 with transducer$3	US-PGPUB; USPAT; EPO; JPO	OR	ON	2013/03/29 19:11
S38	464	S37 and @ad<"20080101"	US-PGPUB; USPAT; EPO; JPO	OR	ON	2013/03/29 19:13
S39	30	S37 and @ad<"20080101" and "455"/$.ccls.	US-PGPUB; USPAT; EPO; JPO	OR	ON	2013/03/29 19:15
S40	0	("8190203.pn.").PN.	US-PGPUB; USPAT; USOCR; EPO; JPO	OR	OFF	2013/06/08 23:17
S41	0	("8190203.pn.").PN.	US-PGPUB; USPAT; USOCR; FPRS; EPO; JPO; DERWENT; IBM_TDB	OR	OFF	2013/06/08 23:18
S42	2	("8190203").PN.	US-PGPUB; USPAT; USOCR; FPRS; EPO; JPO; DERWENT; IBM_TDB	OR	OFF	2013/06/08 23:18
S43	27	("20050064853" | "20050198233" | "20060206487" | "20060212442" | "20060212444" | "20070008984" | "20070037615" | "20070049198" | "20070116316" | "20070165875" | "20070230727" | "20080062939" | "20080101279" | "20080291891" | "20100246788" | "5784685" | "6792091" | "6937712" | "7003515" | "7027311" | "7099370" | "7120388" | "7139585" | "7599679" | "7697899" | "7764775" | "7805210").PN.	US-PGPUB; USPAT; USOCR	OR	ON	2013/06/08 23:22
S44	9	((cd adj player) ipad) with audio near jack same (network internet wireless)	US-PGPUB; USPAT; USOCR	OR	ON	2013/06/08 23:26
S45	55	("20010050991" | "20010050993" | "20010053228" | "20020102005" | "20040136522" | "20040198436" | "20040204185" | "20050004796" | "20050064915" | "20050090295" | "20050130697" | "20050146227" | "20050177365" | "20050181826" |	US-PGPUB; USPAT; USOCR	OR	ON	2013/06/08 23:32

		"20050232448" | "20050239434" | "20060013410" | "20060046656" | "20060046778" | "20060134959" | "20060166705" | "20060193479" | "20070015486" | "20070025561" | "20070036384" | "20070041582" | "20070082612" | "20070225035" | "20070226384" | "20070239849" | "20070247794" | "20080167092" | "20080201138" | "5604813" | "5787180" | "5825897" | "5951141" | "5978689" | "5991637" | "6061456" | "6108415" | "6415034" | "6507650" | "6873862" | "6975984" | "7155214" | "7181233" | "7187948" | "7190797" | "7251332" | "7254420" | "7292880" | "7346176" | "7395090" | "7433715").PN.				
S46	550	((cd adj player) ipad mp3) and (server computer) with encod$4 with (audio sound) and (earphone earcup headset headphone)	US-PGPUB; USPAT; USOCR	OR	ON	2013/06/10 12:19
S47	6	((cd adj player) ipad mp3) and (server computer) with encod$4 with analog with digital with (audio sound) and (earphone earcup headset headphone) same acoustic	US-PGPUB; USPAT; USOCR	OR	ON	2013/06/10 12:21
S48	1	"8055361".pn.	US-PGPUB; USPAT; USOCR	OR	ON	2013/06/10 12:24
S49	2	"20080167092"	US-PGPUB; USPAT; USOCR	OR	ON	2013/06/10 12:27
S50	2	"20040156012"	US-PGPUB; USPAT; EPO; JPO	OR	ON	2013/06/10 12:30
S51	108	((cd adj player) ipad mp3) same (server computer) with encod$4 with (audio sound) and (earphone earcup headset headphone) and internet	US-PGPUB; USPAT; USOCR	OR	ON	2013/06/10 12:41
S52	41	(server computer) with encod$4 with (analog digital) and ((cd adj player) ipad mp3) with (earphone earcup headset headphone) and internet	US-PGPUB; USPAT; USOCR	OR	ON	2013/06/10 12:44
S53	0	"200700826612"	US-PGPUB; USPAT; USOCR	OR	ON	2013/06/10 12:57
S54	2	"20070082612"	US-PGPUB; USPAT; EPO; JPO	OR	ON	2013/06/10 12:58
S55	12	((cd adj player) ipad mp3) with (earphone earcup headset headphone) same (convert$3 switch$3 chang$3) with (analog digital) and acoustic with analog	US-PGPUB; USPAT; USOCR	OR	ON	2013/06/10 15:32
S56	0	((cd adj player) ipad mp3) and (earphone earcup headset headphone) same acoustic with aoutput$4 with analog	US-PGPUB; USPAT; USOCR	OR	ON	2013/06/10 16:15
S57	18	((cd adj player) ipad mp3) and	US-PGPUB;	OR	ON	2013/06/10

		(earphone earcup headset headphone) same acoustic with output$3 with analog	USPAT; USOCR			16:15
S58	178	(earphone earcup headset headphone) same acoustic with output$3 with analog	US-PGPUB; USPAT; USOCR	OR	ON	2013/06/10 16:23
S59	5	(earphone earcup headset headphone) same (mp3 (cd near player)) and server with song$1 and register$3 with song$1	US-PGPUB; USPAT; USOCR	OR	ON	2013/06/10 21:24
S60	75	(earphone earcup headset headphone) same (mp3 (cd near player)) same ear near canal	US-PGPUB; USPAT; USOCR	OR	ON	2013/06/10 22:40
S61	1	(earphone earcup headset headphone) same (mp3 (cd near player)) same ear near canal and wifi	US-PGPUB; USPAT; USOCR	OR	ON	2013/06/10 23:02
S62	20	(earphone earcup headset headphone) same (mp3 (cd near player)) same ear near canal and (wifi bluetooth)	US-PGPUB; USPAT; USOCR	OR	ON	2013/06/10 23:02
S63	1	"8190203".pn.	US-PGPUB; USPAT; EPO; JPO	OR	ON	2013/10/29 22:19
S64	1	"8571544".pn.	US-PGPUB; USPAT; EPO; JPO	OR	ON	2013/10/29 22:21
S65	0	(earphone headset) same coustic$1 with transducer$3 and (earphone headset) with wireless with (server internet) and play$4 with (song music) with (server internet)	US-PGPUB; USPAT; EPO; JPO	OR	ON	2013/10/29 23:16
S66	5	(earphone headset) same acoustic$1 with transducer$3 and (earphone headset) with wireless with (server internet) and play$4 with (song music) with (server internet)	US-PGPUB; USPAT; EPO; JPO	OR	ON	2013/10/29 23:23
S67	25	(earphone headset) same acoustic$1 with transducer$3 and (earphone headset) with wireless with (server internet)	US-PGPUB; USPAT; EPO; JPO	OR	ON	2013/10/29 23:24
S68	1826	(earphone headset) same (play$4 operat$3) with (music song multimedia media audio) with (server internet)	US-PGPUB; USPAT; EPO; JPO	OR	ON	2013/10/30 12:30
S69	418	(earphone headset) with (play$4 operat$3) with (music song multimedia media audio) with (server internet)	US-PGPUB; USPAT; EPO; JPO	OR	ON	2013/10/30 12:31
S70	252	(earphone headset) with (play$4 operat$3) with (music song multimedia media audio) with (server internet) and @ad<"20080505"	US-PGPUB; USPAT; EPO; JPO	OR	ON	2013/10/30 12:31
S71	119	(earphone headset) near3 (music song multimedia media audio) with (server internet) and @ad<"20080505"	US-PGPUB; USPAT; EPO; JPO	OR	ON	2013/10/30 12:36
S72	15	(earphone headset) near3 (music song) with (server internet) and @ad<"20080505"	US-PGPUB; USPAT; EPO; JPO	OR	ON	2013/10/30 13:27
S73	1	"8571544".pn.	US-PGPUB;	OR	ON	2013/12/07

			USPAT; EPO; JPO			12:49
S74	4	(earphone headset headphone) with wireless with receiv$3 with (song audio music) same (server (base near station)) same internet.clm.	US-PGPUB; USPAT; EPO; JPO	OR	ON	2013/12/07 12:54
S75	73	("20020122396" | "20020132630" | "20020147016" | "20020160779" | "20020160806" | "20020164991" | "20040085938" | "4617674" | "5115463" | "5255307" | "5345448" | "5353331" | "5410588" | "5448569" | "5469496" | "5506887" | "5519706" | "5519759" | "5537434" | "5546411" | "5579379" | "5594718" | "5610972" | "5664005" | "5715521" | "5734699" | "5745850" | "5758281" | "5809415" | "5818824" | "5822313" | "5845211" | "5887256" | "5896375" | "5911120" | "5913163" | "5960344" | "5999813" | "6005856" | "6009332" | "6011975" | "6021138" | "6047177" | "6052602" | "6055427" | "6058106" | "6069588" | "6078571" | "6119006" | "6151311" | "6163546" | "6175860" | "6201962" | "6205552" | "6212395" | "6226515" | "6259685" | "6275518" | "6278699" | "6295310" | "6321089" | "6396457" | "6430395" | "6466791" | "6490446" | "6510381" | "6529732" | "6628632" | "6640098" | "6650871" | "6665541" | "6675015" | "6714524").PN.	US-PGPUB; USPAT; USOCR	OR	ON	2013/12/07 13:00
S76	483	(earphone headset headphone) with receiv$3 with (song audio music) same (server (base near station))	US-PGPUB; USPAT; EPO; JPO	OR	ON	2013/12/07 13:12
S77	61	(earphone headset headphone) with receiv$3 with (song audio music) same (server (base near station)) same internet	US-PGPUB; USPAT; EPO; JPO	OR	ON	2013/12/07 13:13
S78	21	("4659877" | "4872160" | "4872197" | "4958341" | "5029196" | "5109405" | "5341374" | "5375068" | "5410754" | "5434913" | "5490247" | "5493568" | "5608786" | "5724355" | "5726984" | "5751706" | "5802160" | "5815562" | "5946299" | "5999525" | "6067350").PN.	US-PGPUB; USPAT; USOCR	OR	ON	2013/12/07 13:20
S79	38	(earphone headset headphone) with receiv$3 with (song audio music) same (server (base near station)).clm.	US-PGPUB; USPAT; EPO; JPO	OR	ON	2013/12/07 13:22
S80	3	"9049502".pn.	US-PGPUB; USPAT; USOCR; FPRS; EPO; JPO; DERWENT; IBM_TDB	OR	OFF	2016/06/14 14:56
S81	2	"8571544".pn.	US-PGPUB; USPAT; USOCR;	OR	OFF	2016/06/14 15:01

			FPRS; EPO; JPO; DERWENT; IBM_TDB			
S82	2	"8190203".pn.	US-PGPUB; USPAT; USOCR; FPRS; EPO; JPO; DERWENT; IBM_TDB	OR	OFF	2016/06/14 15:03
S83	1	14/695696	US-PGPUB; USPAT; USOCR; FPRS; EPO; JPO; DERWENT; IBM_TDB	OR	OFF	2016/06/14 15:36
S86	23	digital near player and adapter and acoustic near transducer$1	US-PGPUB; USPAT; USOCR; FPRS; EPO; JPO; DERWENT; IBM_TDB	OR	OFF	2016/06/14 15:59
S87	4	S86 AND ((H04W52/0229 OR H04R1/1091 OR H04R2201/103 OR H04R2225/55 OR H04R2420/07 OR H04R25/554 OR H04R3/00 OR H04R5/033 OR H04R5/04).CPC.)	US-PGPUB; USPAT; USOCR; FPRS; EPO; JPO; DERWENT; IBM_TDB	OR	OFF	2016/06/14 16:02
S88	2	digital near player and acoustic near transducer$1 and plugg$2 and 381/$.ccls.	US-PGPUB; USPAT; USOCR; FPRS; EPO; JPO; DERWENT; IBM_TDB	OR	OFF	2016/06/14 16:03
S89	28	digital near player and acoustic near transducer$1 and 381/$.ccls.	US-PGPUB; USPAT; USOCR; FPRS; EPO; JPO; DERWENT; IBM_TDB	OR	OFF	2016/06/14 16:03
S90	6	("3894196" | "4110583" | "4490842" | "5022486" | "5138663" | "5459290").PN.	US-PGPUB; USPAT; USOCR	OR	OFF	2016/06/14 16:04
S91	5	("4432097" | "4641361" | "7215202" | "7583809" | "8150067").PN.	US-PGPUB; USPAT; USOCR	OR	OFF	2016/06/14 16:05
S92	13	S89 AND ((H04R5/0335 OR H04R2460/13 OR H04R5/033 OR H04R1/1016 OR H04R2201/107 OR H04R2499/11 OR H04R19/00 OR H04R2201/023 OR H04R2400/01 OR G02C11/06 OR G02C11/10).CPC.)	US-PGPUB; USPAT; USOCR; FPRS; EPO; JPO; DERWENT; IBM_TDB	OR	OFF	2016/06/14 16:07
S93	19	digital near player and adapter and	US-PGPUB;	OR	OFF	2016/06/14

		acoustic near transducer$1 and wireless$2 with network	USPAT; USOCR; FPRS; EPO; JPO; DERWENT; IBM_TDB			16:12
S94	139	("20060212442" | "20060268830" | "8478880" | "8571544" | "7003515" | "7650168" | "8335312" | "20090063703" | "20070008984" | "20070297618" | "20080298606" | "5784685" | "6671494" | "7027311" | "7099370" | "7266390" | "7734055" | "20130039510" | "7467021" | "8401202" | "20040107271" | "20070037615" | "20070165875" | "20080031470" | "20080076489" | "6674864" | "6937712" | "7095455" | "7139585" | "7764775" | "7805210" | "8023663" | "8027638" | "8102836" | "9049502" | "20050198233" | "20060206487" | "20070253603" | "6389463" | "7120388" | "7599679" | "7680490" | "7861312" | "7962482" | "8553865" | "20050240296" | "20070049198" | "20080062939" | "6792091" | "7697899" | "8295516" | "8655420" | "20050064853" | "20100290642" | "20150237439" | "7337027" | "7512414" | "8190203" | "8792945").PN.	US-PGPUB; USPAT; USOCR; EPO; JPO; DERWENT	OR	OFF	2016/07/28 10:00
S95	0	S94 and (multiple plurality multi) with acoustic near1 transducer$1 and adapter$3	US-PGPUB; USPAT; USOCR; EPO; JPO; DERWENT	OR	OFF	2016/07/28 10:02
S96	63	(multiple plurality multi) with acoustic near1 transducer$1 and adapter$3	US-PGPUB; USPAT; USOCR; EPO; JPO; DERWENT	OR	OFF	2016/07/28 10:02
S97	10	(multiple plurality multi) with acoustic near1 transducer$1 and adapter$3.clm.	US-PGPUB; USPAT; USOCR; EPO; JPO; DERWENT	OR	OFF	2016/07/28 10:02
S98	0	(earphone headset) near3 (music song multimedia media audio) with (server internet) and @ad<"20080505".clm.	US-PGPUB; USPAT; EPO; JPO	OR	ON	2016/07/28 10:11
S99	10	digital near player and adapter and acoustic near transducer$1 and wireless$2 with network.clm.	US-PGPUB; USPAT; USOCR; FPRS; EPO; JPO; DERWENT; IBM_TDB	OR	OFF	2016/07/28 10:11
S100	23	digital near player and adapter and acoustic$1 near transducer$1 and wireless$2	US-PGPUB; USPAT; USOCR; FPRS; EPO; JPO; DERWENT;	OR	OFF	2016/07/28 10:23

			IBM_TDB			
S101	17	digital near player and adapter and acoustic$1 near transducer$1 and wireless$2.clm.	US-PGPUB; USPAT; USOCR; FPRS; EPO; JPO; DERWENT; IBM_TDB	OR	OFF	2016/07/28 10:29
S102	6	digital near player and adapter and (multiple plurality multi) with acoustic$1 and transducer$1	US-PGPUB; USPAT; USOCR; FPRS; EPO; JPO; DERWENT; IBM_TDB	OR	OFF	2016/07/28 10:40
S103	2	adapter$3 with digital near player$3 and acoustic$1 near transducer$1	US-PGPUB; USPAT; USOCR; FPRS; EPO; JPO; DERWENT; IBM_TDB	OR	OFF	2016/07/28 10:42
S104	2	adapter$3 same digital$1 near player$3 and acoustic$1 near transducer$1	US-PGPUB; USPAT; USOCR; FPRS; EPO; JPO; DERWENT; IBM_TDB	OR	OFF	2016/07/28 10:42
S105	29	adapter$3 and digital$1 near player$3 and acoustic$1 near transducer$1	US-PGPUB; USPAT; USOCR; FPRS; EPO; JPO; DERWENT; IBM_TDB	OR	OFF	2016/07/28 10:42
S106	2	adapter$3 and digital$1 near player$3 and acoustic$1 near transducer$1.clm.	US-PGPUB; USPAT; USOCR; FPRS; EPO; JPO; DERWENT; IBM_TDB	OR	OFF	2016/07/28 11:01
S107	2	"8497535".pn.	US-PGPUB; USPAT; USOCR; EPO; JPO; DERWENT	OR	OFF	2017/05/24 10:49
S108	2	"9497535".pn.	US-PGPUB; USPAT; USOCR; EPO; JPO; DERWENT	OR	OFF	2017/05/24 10:49
S109	2	"9438987".pn.	US-PGPUB; USPAT; USOCR; EPO; JPO; DERWENT	OR	OFF	2017/05/24 10:50
S110	3	"9049502".pn.	US-PGPUB; USPAT;	OR	OFF	2017/05/24 10:52

			USOCR; EPO; JPO; DERWENT			
S111	3	"5571544".pn.	US-PGPUB; USPAT; USOCR; EPO; JPO; DERWENT	OR	OFF	2017/05/24 10:58
S112	2	"8571544".pn.	US-PGPUB; USPAT; USOCR; EPO; JPO; DERWENT	OR	OFF	2017/05/24 10:58
S113	2	"8190203".pn.	US-PGPUB; USPAT; USOCR; EPO; JPO; DERWENT	OR	OFF	2017/05/24 11:16
S114	3	"8655420".pn.	US-PGPUB; USPAT; USOCR; EPO; JPO; DERWENT	OR	OFF	2017/05/24 11:18
S115	0	"90729959".pn.	US-PGPUB; USPAT; USOCR; EPO; JPO; DERWENT	OR	OFF	2018/02/12 13:34
S116	3	"9729959".pn.	US-PGPUB; USPAT; USOCR; EPO; JPO; DERWENT	OR	OFF	2018/02/12 13:34
S117	2	"9497535".pn.	US-PGPUB; USPAT; USOCR; EPO; JPO; DERWENT	OR	OFF	2018/02/12 13:35
S118	902	digital near player and adapter and acoustic near transducer$1 dock$ near station and elongat$3 and bluetooth	US-PGPUB; USPAT; USOCR; FPRS; EPO; JPO; DERWENT; IBM_TDB	OR	OFF	2018/02/12 14:49
S123	2	digital near player and acoustic$1 with transducer$1 and dock$ near station	US-PGPUB; USPAT; USOCR; FPRS; EPO; JPO; DERWENT; IBM_TDB	OR	OFF	2018/02/12 14:51
S124	1	(earphone headset) with (play$4 operat$3) with (music song multimedia media audio) with (server internet) and transduc$3 and elongat$3 and wireless and (recharg$5 charg$5) with batter$3.clm.	US-PGPUB; USPAT; EPO; JPO	OR	ON	2018/03/19 10:29
S125	1	S124 AND ((H04R2201/103 OR H04R2201/107 OR H04R25/554 OR	US-PGPUB; USPAT;	OR	ON	2018/03/19 10:32

		H04R5/033).CPC.)	EPO; JPO			
S126	1	(earphone headset) with (play$4 operat$3) with (music song multimedia media audio) with (server internet) and transduc$3 and elongat$3 and wireless and (recharg$5 charg$5) with batter$3	US-PGPUB; USPAT; EPO; JPO	OR	ON	2018/03/19 10:32
S127	1	(earphone headset) with (play$4 operat$3) with (music song multimedia media audio) with (server internet) and transduc$3 and elongat$3 and (recharg$5 charg$5) with batter$3	US-PGPUB; USPAT; EPO; JPO	OR	ON	2018/03/19 10:39
S128	7	(earphone headset) with (play$4 operat$3) with (music song multimedia media audio) with (server internet) and transduc$3 and elongat$3 and (recharg$5 charg$5)	US-PGPUB; USPAT; EPO; JPO	OR	ON	2018/03/19 10:40
S129	2	S128 AND ((H04R1/02 OR H04R5/033 OR H04R2201/107 OR H04R25/554 OR H04R3/00 OR H04W4/80).CPC.)	US-PGPUB; USPAT; EPO; JPO	OR	ON	2018/03/19 10:42
S130	9	"49783294".FMID.	US-PGPUB; USPAT; FPRS	OR	OFF	2018/03/19 10:42
S131	158	("20010011951" | "20010026626" | "20020001381" | "20020012441" | "20020068995" | "20020115478" | "20020149561" | "20020183014" | "20030108209" | "20030118197" | "20030119566" | "20040013279" | "20040105566" | "20040131211" | "20040132509" | "20040189151" | "20040207542" | "20040259513" | "20050046790" | "20050088530" | "20050160270" | "20050176459" | "20050184875" | "20050185813" | "20050207599" | "20050213432" | "20050232436" | "20050237685" | "20050244020" | "20050275714" | "20050286734" | "20060079291" | "20060093161" | "20060120546" | "20060121960" | "20060140439" | "20060158064" | "20060159297" | "20060171107" | "20060227984" | "20060286998" | "20070003098" | "20070015467" | "20070036370" | "20070080951" | "20070081679" | "20070098200" | "20070160253" | "20070249395" | "20070263893" | "20080008344" | "20080054862" | "20080106449" | "20080107300" | "20080129703" | "20080139254" | "20080170725" | "20080227490" | "20080239061" | "20080247562" | "20080267433" | "20090002626" | "20090028356" | "20090129620" | "20090226011" | "20090226017" | "20090226020" | "20090245557" | "20090288489" | "20090290730" | "20090323976" | "20100056227" | "20100061582" | "20100098269" | "20100150368" | "20100172519" |	US-PGPUB; USPAT; USOCR	OR	OFF	2018/03/19 10:43

		"20100178957" | "20100184487" | "20100246878" | "20100254562" | "20100310086" | "20100311462" | "20100322127" | "20100328033" | "20100329485" | "20110143819" | "20110158425" | "20110170718" | "20110180542" | "20110201301" | "20110237306" | "20110254616" | "20110267551").PN. OR ("20110280416" | "20110281617" | "20110293105" | "20110301729" | "20120008793" | "20120008807" | "20120010735" | "20120082329" | "20120130660" | "20120133213" | "20120182429" | "20120183163" | "20120237075" | "20120244917" | "20120249223" | "20120253236" | "20120289162" | "20120300956" | "20130100596" | "20130111346" | "20130136279" | "20130169352" | "20130169829" | "20130236043" | "20130242809" | "20130301860" | "20130316691" | "20130322670" | "20130324193" | "20130336507" | "20140003641" | "20140342783" | "20140378191" | "20150054779" | "20150065057" | "20150070083" | "20150078569" | "20150086047" | "20150141088" | "20150172588" | "20150181338" | "20150208153" | "20150256946" | "20160007109" | "20160086594" | "20160205233" | "20160261299" | "20160286296" | "2045404" | "5295193" | "5323468" | "6380923" | "6456721" | "6463157" | "6950126" | "7231235" | "7437122" | "7442164" | "7555136" | "8521239" | "8526646" | "8886263" | "8918149" | "9020170").PN.				
S132	1	"9986325".pn.	US-PGPUB; USPAT; EPO; JPO	OR	ON	2018/08/31 15:04
S133	2	"9986325".pn.	US-PGPUB; USPAT; USOCR; EPO; JPO; DERWENT	OR	OFF	2018/08/31 16:02
S134	0	microphone with utteranc$3 with headphone and (mobile wireless pda $4phone) with (adhoc (ad adj hoc)) and earphone$1 and @ad< "20090303"	US-PGPUB; USPAT; USOCR; EPO; JPO; DERWENT	OR	OFF	2018/08/31 16:10
S135	1	microphone with utteranc$3 with headphone and (mobile wireless pda $4phone) with (adhoc (ad adj hoc)) and earphone$1	US-PGPUB; USPAT; USOCR; EPO; JPO; DERWENT	OR	OFF	2018/08/31 16:10
S136	1	microphone with utteranc$3 and headphone and (mobile wireless pda $4phone) with (adhoc (ad adj hoc)) and earphone$1	US-PGPUB; USPAT; USOCR; EPO; JPO; DERWENT	OR	OFF	2018/08/31 16:12

S137	31	microphone with utteranc$3 and headphone and earphone$1	US-PGPUB; USPAT; USOCR; EPO; JPO; DERWENT	OR	OFF	2018/08/31 16:12
S138	8	microphone with utteranc$3 and headphone and earphone$1.clm.	US-PGPUB; USPAT; USOCR; EPO; JPO; DERWENT	OR	OFF	2018/08/31 16:12
S139	7	S138 AND ((H04R2201/107 OR H04R5/033 OR H04R1/1008 OR H04R1/1016 OR H04R2460/13 OR H04M1/6066).CPC.)	US-PGPUB; USPAT; USOCR; EPO; JPO; DERWENT	OR	OFF	2018/08/31 16:14
S140	128	(mobile wireless $4phone) with (adhoc (ad adj hoc)) with (signal$3 rf frequency) with threshold and (mobile wireless pda $4phone) with (adhoc (ad adj hoc))	US-PGPUB; USPAT; USOCR; FPRS; EPO; JPO; DERWENT; IBM_TDB	OR	OFF	2018/08/31 16:23
S141	32	(mobile wireless $4phone) with (adhoc (ad adj hoc)) with (signal$3 rf frequency) with threshold and (mobile wireless pda $4phone) with (adhoc (ad adj hoc)) and @ad<"20090303"	US-PGPUB; USPAT; USOCR; FPRS; EPO; JPO; DERWENT; IBM_TDB	OR	OFF	2018/08/31 16:23
S142	0	microphone$1 and headphone$1 and (earphone$1 headset headphone) with acoutic$1 and (mobile wireless pda $4phone) with (adhoc (ad adj hoc)) and @ad<"20090303"	US-PGPUB; USPAT; USOCR; EPO; JPO; DERWENT	OR	OFF	2018/08/31 16:25
S143	0	microphone$1 and headphone$1 and (earphone$1 headset headphone) with acoutic$1 and (mobile wireless pda $4phone) with (adhoc (ad adj hoc))	US-PGPUB; USPAT; USOCR; EPO; JPO; DERWENT	OR	OFF	2018/08/31 16:25
S144	0	microphone$1 and headphone$1 and (earphone$1 headset headphone) with acoutic$1 and (adhoc (ad adj hoc))	US-PGPUB; USPAT; USOCR; EPO; JPO; DERWENT	OR	OFF	2018/08/31 16:25
S145	2807	microphone$1 and headphone$1 and (adhoc (ad adj hoc))	US-PGPUB; USPAT; USOCR; EPO; JPO; DERWENT	OR	OFF	2018/08/31 16:26
S146	153	microphone$1 and headphone$1 and (earphone$1 headset headphone) and (mobile wireless pda $4phone) with (adhoc (ad adj hoc)) and @ad<"20090303"	US-PGPUB; USPAT; USOCR; EPO; JPO; DERWENT	OR	OFF	2018/08/31 16:27
S147	31	microphone$1 and headphone$1 and (earphone$1 headset headphone) and (mobile wireless pda $4phone) with (adhoc (ad adj hoc)) and (acoutic$1 transducer$1) and @ad<"20090303"	US-PGPUB; USPAT; USOCR; EPO; JPO; DERWENT	OR	OFF	2018/08/31 16:28
S148	782	(earphone headset) with (recharg$5	US-PGPUB;	OR	ON	2018/09/06

		charg$5) with (battery power) and @ad<"20080101"	USPAT; EPO; JPO			16:49
S149	313	(earphone$1 headset) with (recharg$5 charg$5) near3 battery with power$3 and @ad<"20080101"	US-PGPUB; USPAT; EPO; JPO	OR	ON	2018/09/06 16:50
S150	44	S149 AND ((H04M1/0258 OR H04M1/04 OR H04M1/0262 OR H04M1/0202 OR G06F1/3203 OR H02J7/0054 OR H02J2007/0096 OR H02J7/32).CPC.)	US-PGPUB; USPAT; EPO; JPO	OR	ON	2018/09/06 16:52
S151	351136	((cd near player) (audio near player) (music near player) mobile) with stor$3 (audio music sound song$1) and (earphone$1 headset headphone$1 (head near phone$1)) and (earphone$1 headset headphone$1 (head near phone$1)) with (acoustic transducer$1) and ((cd near player) (audio near player) (music near player) mobile) with (bluetooth adhoc (short near rang$3) (ad adj hoc)) and @ad<"20080101"	US-PGPUB; USPAT; EPO; JPO	OR	ON	2018/09/06 22:46
S152	351041	((cd near player) (audio near player) (music near player) mobile) with stor$3 (audio music song$1) and (earphone$1 headset headphone$1 (head near phone$1)) and (earphone$1 headset headphone$1 (head near phone$1)) with acoustic with transducer$1 and ((cd near player) (audio near player) (music near player) mobile) with (bluetooth adhoc (short near rang$3) (ad adj hoc)) and @ad<"20080101"	US-PGPUB; USPAT; EPO; JPO	OR	ON	2018/09/06 22:48
S153	548914	((cd near player) (audio near player) (music near player) mobile) with stor$3 (audio music song$1) and (earphone$1 headset headphone$1 (head near phone$1)) and (earphone$1 headset headphone$1 (head near phone$1)) with acoustic with transducer$1 and ((cd near player) (audio near player) (music near player) mobile) with (bluetooth adhoc (short near rang$3) (ad adj hoc)) and @ad<"20080101"	US-PGPUB; USPAT; USOCR; FPRS; EPO; JPO; DERWENT; IBM_TDB	OR	ON	2018/09/06 22:48
S154	8	((cd near player) (audio near player) (music near player)) with stor$3 with (audio music song$1) and (earphone$1 headset headphone$1 (head near phone$1)) and (earphone$1 headset headphone$1 (head near phone$1)) with acoustic with transducer$1 and ((cd near player) (audio near player) (music near player) mobile) with (bluetooth adhoc (short near rang$3) (ad adj hoc)) and @ad<"20080101"	US-PGPUB; USPAT; USOCR; FPRS; EPO; JPO; DERWENT; IBM_TDB	OR	ON	2018/09/06 22:49
S155	24	((cd near player) (audio near player) (music near player) mobile) with stor$3 with (audio music song$1) and (earphone$1 headset headphone$1	US-PGPUB; USPAT; USOCR; FPRS;	OR	ON	2018/09/06 23:00

		(head near phone$1)) and acoustic with transducer$1 and (bluetooth adhoc (ad adj hoc)) and @ad<"20080101"	EPO; JPO; DERWENT; IBM_TDB			
S156	2	(earphone$1 headset headphone$1 (head near phone$1) (ear near phone$1)) with antenna with ((cd near player) (audio near player) (music near player) mobile mp3) with (bluetooth adhoc (ad adj hoc)) and acoustic$1 and @ad<"20080101"	US-PGPUB; USPAT; USOCR; FPRS; EPO; JPO; DERWENT; IBM_TDB	OR	ON	2018/09/07 07:51
S157	27	(earphone$1 headset headphone$1 (head near phone$1) (ear near phone$1)) with antenna with ((cd near player) (audio near player) (music near player) mobile mp3) with (bluetooth adhoc (ad adj hoc)) and @ad<"20080101"	US-PGPUB; USPAT; USOCR; FPRS; EPO; JPO; DERWENT; IBM_TDB	OR	ON	2018/09/07 08:05
S158	8	(earphone$1 (ear near phone$1)) with antenna with ((cd near player) (audio near player) (music near player) mobile mp3) with (bluetooth adhoc (ad adj hoc)) and @ad<"20080101"	US-PGPUB; USPAT; USOCR; FPRS; EPO; JPO; DERWENT; IBM_TDB	OR	ON	2018/09/07 08:17
S159	118	(earphone$1 (ear near phone$1)) with ((cd near player) (audio near player) (music near player) mobile mp3) with (bluetooth adhoc (ad adj hoc)) and microphone and @ad<"20080101"	US-PGPUB; USPAT; USOCR; FPRS; EPO; JPO; DERWENT; IBM_TDB	OR	ON	2018/09/07 08:19
S160	26	(earphone$1 (ear near phone$1)) with ((cd near player) (audio near player) (music near player) mobile mp3) with (bluetooth adhoc (ad adj hoc)) and microphone with (headphone headset) and @ad<"20080101"	US-PGPUB; USPAT; USOCR; FPRS; EPO; JPO; DERWENT; IBM_TDB	OR	ON	2018/09/07 08:21
S161	1	(mobile wireless $4phone terminal) with antenna$1 with ((cd near player) (audio near player) (music near player) mp3) with (adhoc (ad adj hoc)) and (headphone headset)	US-PGPUB; USPAT; USOCR; EPO; JPO; DERWENT	OR	OFF	2018/09/07 09:10
S162	4	(mobile wireless $4phone terminal) with antenna$1 with ((cd near player) (audio near player) (music near player) mp3) with (adhoc (ad adj hoc) bluetooth (short near rang$3)) and (headphone headset) with microphone and (adhoc (ad adj hoc) bluetooth (short near rang$3)) and @ad<"20080303"	US-PGPUB; USPAT; USOCR; EPO; JPO; DERWENT	OR	OFF	2018/09/07 09:12
S163	1	(mobile wireless $4phone terminal handset) with antenna$1 with ((cd near player) (audio near player) (music near player) mp3) with (adhoc (ad adj hoc)) and (headphone headset)	US-PGPUB; USPAT; USOCR; EPO; JPO; DERWENT	OR	OFF	2018/09/07 09:23
S164	210	(mobile wireless $4phone terminal handset) with ((cd near player) (audio	US-PGPUB; USPAT;	OR	OFF	2018/09/07 09:26

		near player) (music near player) mp3 music song$1 multimedia) with (adhoc (ad adj hoc)) and (headphone headset)	USOCR; EPO; JPO; DERWENT			
S165	24	(mobile wireless $4phone terminal handset) with ((cd near player) (audio near player) (music near player) mp3 music song$1 multimedia) with (adhoc (ad adj hoc)) and (headphone headset) and @ad<"20080303"	US-PGPUB; USPAT; USOCR; EPO; JPO; DERWENT	OR	OFF	2018/09/07 09:26
S166	0	(server computer center$1 central$3) with (software firmware) with upgrat$3 near8 (headphone headset) and @ad<"20080303"	US-PGPUB; USPAT; USOCR; EPO; JPO; DERWENT	OR	OFF	2018/09/07 11:32
S167	0	(server computer center$1 central$3) with upgrat$3 near8 (headphone headset) and @ad<"20080303"	US-PGPUB; USPAT; USOCR; EPO; JPO; DERWENT	OR	OFF	2018/09/07 11:34
S168	15	(server computer center$1 central$3) with (upgrad$3 updat$3) near8 (headphone headset) and @ad<"20080303"	US-PGPUB; USPAT; USOCR; EPO; JPO; DERWENT	OR	OFF	2018/09/07 11:34
S169	0	(earphone$1 (ear near phone$1)) with curve$3 with hang$3 with bar$1 and (headphone headset) and elongat$3 and @ad<"20080101"	US-PGPUB; USPAT; USOCR; FPRS; EPO; JPO; DERWENT; IBM_TDB	OR	ON	2018/09/07 11:45
S170	0	(earphone$1 (ear near phone$1)) with curve$3 with hang$3 with bar$1 and (headphone headset) and @ad<"20080101"	US-PGPUB; USPAT; USOCR; FPRS; EPO; JPO; DERWENT; IBM_TDB	OR	ON	2018/09/07 11:46
S171	0	(earphone$1 (ear near phone$1)) and curve$3 with hang$3 with bar$1 and (headphone headset) and @ad<"20080101"	US-PGPUB; USPAT; USOCR; FPRS; EPO; JPO; DERWENT; IBM_TDB	OR	ON	2018/09/07 11:46
S172	3	curve$3 with hang$3 with bar$1 and (headphone headset) and @ad<"20080101"	US-PGPUB; USPAT; USOCR; FPRS; EPO; JPO; DERWENT; IBM_TDB	OR	ON	2018/09/07 11:47
S173	72	curve$3 with bar$1 and (headphone headset) and @ad<"20080101"	US-PGPUB; USPAT; USOCR; FPRS; EPO; JPO; DERWENT; IBM_TDB	OR	ON	2018/09/07 11:47

S174	282	(headphone headset) with elongat$3 and @ad<"20080101"	US-PGPUB; USPAT; USOCR; FPRS; EPO; JPO; DERWENT; IBM_TDB	OR	ON	2018/09/07 12:07
S175	19	(headphone headset) with elongat$3 and transducer with acoustic and @ad<"20080101"	US-PGPUB; USPAT; USOCR; FPRS; EPO; JPO; DERWENT; IBM_TDB	OR	ON	2018/09/07 12:08
S176	160	(earphone$1 (ear near phone$1)) with elongat$3 and @ad<"20080101"	US-PGPUB; USPAT; USOCR; FPRS; EPO; JPO; DERWENT; IBM_TDB	OR	ON	2018/09/07 12:13
S177	31	(earphone$1 (ear near phone$1)) with elongat$3 and transducer and @ad<"20080101"	US-PGPUB; USPAT; USOCR; FPRS; EPO; JPO; DERWENT; IBM_TDB	OR	ON	2018/09/07 12:13
S178	7	S177 AND ((H04R5/033 OR H04R1/1008 OR H04R1/105).CPC.)	US-PGPUB; USPAT; USOCR; FPRS; EPO; JPO; DERWENT; IBM_TDB	OR	ON	2018/09/07 12:21
S179	3	S165 AND ((H04W92/18 OR G06F3/167).CPC.)	US-PGPUB; USPAT; USOCR; EPO; JPO; DERWENT	OR	OFF	2018/09/07 12:23
S180	2	"9438987".pn.	US-PGPUB; USPAT; USOCR; EPO; JPO; DERWENT	OR	OFF	2019/04/04 09:54
S181	2	"9497535".pn.	US-PGPUB; USPAT; USOCR; EPO; JPO; DERWENT	OR	OFF	2019/04/04 09:56
S182	3	"9729959".pn.	US-PGPUB; USPAT; USOCR; EPO; JPO; DERWENT	OR	OFF	2019/04/04 09:57
S183	2	"9986325".pn.	US-PGPUB; USPAT; USOCR; EPO; JPO; DERWENT	OR	OFF	2019/04/04 09:58

S184	6	"10206025".pn.	US-PGPUB; USPAT; USOCR; EPO; JPO; DERWENT	OR	OFF	2019/04/04 09:59
S185	23	(earphone earcup headset headphone earbud) with acoustic$1 with transducer$3 and (earphone earcup headset headphone earbud) with antenna$1 with wireless and play$3 with (audio music song$1)	US-PGPUB; USPAT; USOCR	OR	ON	2019/04/04 10:15
S186	17	(earphone earcup headset headphone earbud) with acoustic$1 and automat$4 with play$3 with (song music audio) and wireless with network	US-PGPUB; USPAT; USOCR	OR	ON	2019/04/04 17:54
S188	2668	(earphone earcup headset headphone earbud) and automati$4 with play$3 with (song$1 music audio digital) and wireless	US-PGPUB; USPAT; USOCR	OR	ON	2019/04/04 18:00
S189	201	(earphone earcup headset headphone earbud) same automati$4 with play$3 with (song$1 music audio digital) and wireless	US-PGPUB; USPAT; USOCR	OR	ON	2019/04/04 18:01
S190	24	(earphone earcup headset headphone earbud) same automati$4 with play$3 with (song$1 music audio digital) and wireless and @ad<"20090202"	US-PGPUB; USPAT; USOCR	OR	ON	2019/04/05 10:07
S191	11	S190 AND ((H04R5/033 OR H04R1/1016 OR H04L2012/2841 OR H04M1/6066 OR H04M1/7253 OR H04N1/00307).CPC.)	US-PGPUB; USPAT; USOCR	OR	ON	2019/04/05 10:10
S192	8978	(earphone earcup headset headphone earbud) same microphone$1 and (voice speak$3 utteran$3) with control$3 and @ad<"20090202"	US-PGPUB; USPAT; USOCR	OR	ON	2019/04/05 10:51
S193	3583	(earphone earcup headset headphone earbud) same microphone$1 same (voice speak$3 utteran$3) with control$3 and @ad<"20090202"	US-PGPUB; USPAT; USOCR	OR	ON	2019/04/05 10:52
S194	3656	(earphone earcup headset headphone earbud) with microphone$1 same (voice speak$3 utteran$3) with control$3 and @ad<"20090202"	US-PGPUB; USPAT; USOCR; FPRS; EPO; JPO; DERWENT; IBM_TDB	OR	ON	2019/04/05 10:52
S195	564	(earphone earcup headset headphone earbud) with microphone$1 with (voice speak$3 utteran$3) near4 control$3 and @ad<"20090202"	US-PGPUB; USPAT; USOCR; FPRS; EPO; JPO; DERWENT; IBM_TDB	OR	ON	2019/04/05 10:53
S196	140	S195 and 455/$.ccls.	US-PGPUB; USPAT; USOCR; FPRS; EPO; JPO; DERWENT;	OR	ON	2019/04/05 10:53

			IBM_TDB			
S197	41	(earphone earcup headset headphone) and earbud and microphone$1 with (voice speak$3 utteran$3) near4 control$3 and @ad<"20090202"	US-PGPUB; USPAT; USOCR; FPRS; EPO; JPO; DERWENT; IBM_TDB	OR	ON	2019/04/05 11:34
S198	5	(earphone earcup headset headphone) and hanger near bar and @ad<"20090202"	US-PGPUB; USPAT; USOCR; FPRS; EPO; JPO; DERWENT; IBM_TDB	OR	ON	2019/04/05 12:06
S199	34	(earphone earcup headset headphone earbud) with acoustic$1 and firmware with updat$3 and @ad<"20090101"	US-PGPUB; USPAT; USOCR	OR	ON	2019/04/05 12:45
S200	27	(earphone earcup headset headphone earbud) with acoustic$1 and stor$3 with network with identi$4 and @ad<"20090101"	US-PGPUB; USPAT; USOCR	OR	ON	2019/04/05 13:05
S201	2965976	(earphone earcup headset headphone earbud) and memory with stor$3 with network neae2 identi$4 and @ad<"20090101"	US-PGPUB; USPAT; USOCR	OR	ON	2019/04/05 13:07
S202	50	(earphone earcup headset headphone earbud) and memory with stor$3 with network near2 identi$4 and @ad<"20090101"	US-PGPUB; USPAT; USOCR	OR	ON	2019/04/05 13:10
S203	8	(earphone earcup headset headphone earbud) and memory with stor$3 with (plurality multiple multi) with network near2 identi$4 and @ad<"20090101"	US-PGPUB; USPAT; USOCR	OR	ON	2019/04/05 13:11
S204	21	(earphone earcup headset headphone earbud) and (memory stor$3) with (plurality multiple multi) with network near2 identi$4 and @ad<"20090101"	US-PGPUB; USPAT; USOCR	OR	ON	2019/04/05 13:13
S205	350	(earphone earcup headset headphone earbud) and stor$3 with network near2 identi$4 and @ad<"20090101"	US-PGPUB; USPAT; USOCR	OR	ON	2019/04/05 13:25
S206	132	(earphone earcup headset headphone earbud) and stor$3 with network near2 identi$4 and @ad<"20090101" and 455/$.ccls.	US-PGPUB; USPAT; USOCR	OR	ON	2019/04/05 13:25
S207	0	(earphone earcup headset headphone earbud) same stor$3 with network near2 identi$4 and @ad<"20090101" and 455/$.ccls.	US-PGPUB; USPAT; USOCR	OR	ON	2019/04/05 13:27
S208	27	(earphone earcup headset headphone earbud) with acoustic$1 and automat$4 with play$3 with (song music audio) and wireless	US-PGPUB; USPAT; USOCR	OR	ON	2019/04/05 14:05
S209	9	S208 AND ((H04R1/1008 OR H04R1/1016 OR H04R1/105 OR H04R29/004 OR G10K2210/1081).CPC.)	US-PGPUB; USPAT; USOCR	OR	ON	2019/04/05 14:06
S210	7	(earphone earcup headset headphone earbud) with acoustic$1 and	US-PGPUB; USPAT;	OR	ON	2019/05/25 10:38

		automat$4 with play$3 with (song music audio) and (plurality multiple second) near6 network	USOCR			
S211	4	S210 AND ((H04H20/83 OR G06F3/167 OR H04R2225/55).CPC.)	US-PGPUB; USPAT; USOCR	OR	ON	2019/05/25 11:13
S212	0	(earphone earcup headset headphone earbud) with acoustic$1 and (earphone earcup headset headphone earbud) with automat$4 with play$3 and (plurality multiple second) near6 network.clm.	US-PGPUB; USPAT; USOCR	OR	ON	2019/05/25 11:14
S213	6	(earphone earcup headset headphone earbud) with acoustic$1 and (earphone earcup headset headphone earbud) with automat$4 with play$3 and (plurality multiple second) near6 network	US-PGPUB; USPAT; USOCR	OR	ON	2019/05/25 16:52
S214	195	(earphone earcup headset headphone earbud) and (earphone earcup headset headphone earbud) with automat$4 with play$3 and (plurality multiple second) near6 network	US-PGPUB; USPAT; USOCR	OR	ON	2019/05/25 16:53
S215	22	(earphone earcup headset headphone earbud) and (earphone earcup headset headphone earbud) with automat$4 with play$3 and (plurality multiple second) near6 network.clm.	US-PGPUB; USPAT; USOCR	OR	ON	2019/05/25 16:54
S216	108	("20010003712" | "20020030649" | "20020044152" | "20020154070" | "20030016253" | "20030046401" | "20030067536" | "20040102957" | "20040113867" | "20040193413" | "20040210852" | "20040267527" | "20050114140" | "20050237296" | "20050245292" | "20050261890" | "20060010368" | "20060028400" | "20060061551" | "20060074624" | "20060109237" | "20060178085" | "20060221266" | "20070009125" | "20070030174" | "20070103388" | "20070180979" | "20070220108" | "20070265495" | "20080052643" | "20080055194" | "20080084992" | "20080120141" | "20080144854" | "20080180640" | "20080200774" | "20080239080" | "20090002640" | "20090079839" | "20090093304" | "20090099836" | "20090117890" | "20090182562" | "20090204410" | "20090213071" | "20090240488" | "20090251409" | "20100106497" | "20100117930" | "20100119052" | "20100128626" | "20100141554" | "20100156812" | "20100164990" | "20100169073" | "20100182137" | "20100204981" | "20100235161" | "20100245585" | "20100250231" | "20100302137" | "20100309295" | "20110001699" | "20110092825" | "20110134910" | "20110187640" | "20110238405" | "20120068914" |	US-PGPUB; USPAT; USOCR	OR	OFF	2019/05/25 16:59

		"20120075177" | "20120089392" | "20120110456" | "20120236025" | "20120287284" | "20130174205" | "20130231937" | "20130288753" | "20130289971" | "20130300649" | "20140223299" | "20140235169" | "20140368412" | "20150072672" | "20150279354" | "5005213" | "5208449" | "5594469" | "5698834" | "6084556" | "6198462" | "6313864" | "6369952" | "6408257" | "6532446" | "6538676" | "6778906" | "6965862" | "7501995").PN. OR ("8184983" | "8327295" | "8838075" | "8855719" | "8862186" | "8929954" | "9122307" | "9235262" | "9294607" | "9316827" | "9369760").PN.				
S217	7	"10206025".pn.	US-PGPUB; USPAT; USOCR; FPRS; EPO; JPO; DERWENT; IBM_TDB	OR	OFF	2019/06/20 18:18
S218	0	(earphone earcup headset headphone earbud (head near phone) (head near set)) with acoustic$1 and (earphone earcup headset headphone earbud (head near phone) (head near set)) with antenna$1 with revei$3 with (audio music media) and @ad<"20101010"	US-PGPUB; USPAT; USOCR	OR	ON	2019/06/21 10:44
S219	182	(earphone earcup headset headphone earbud (head near phone) (head near set)) with acoustic$1 and (earphone earcup headset headphone earbud (head near phone) (head near set)) with antenna$1 and @ad<"20101010"	US-PGPUB; USPAT; USOCR	OR	ON	2019/06/21 10:44
S220	39	(earphone earcup headset headphone earbud (head near phone) (head near set)) with acoustic$1 and (earphone earcup headset headphone earbud (head near phone) (head near set)) with antenna$1 and wireless with (audio music multimedia) and @ad<"20101010"	US-PGPUB; USPAT; USOCR	OR	ON	2019/06/21 10:49
S221	5	"20040063459"	US-PGPUB; USPAT; USOCR; FPRS; EPO; JPO; DERWENT; IBM_TDB	OR	OFF	2019/06/21 12:44
S222	2	(earphone earcup headset headphone earbud (head near phone) (head near set)) with acoustic$1 and (earphone earcup headset headphone earbud (head near phone) (head near set)) with antenna$1 and request$3 with (connect$3 communicat$3) with server$1 and @ad<"20101010"	US-PGPUB; USPAT; USOCR	OR	ON	2019/06/21 12:50

S223	4	(earphone earcup headset headphone earbud (head near phone) (head near set)) with (transduc$3 acoustic$1) and (earphone earcup headset headphone earbud (head near phone) (head near set)) with antenna$1 and (earphone earcup headset headphone earbud (head near phone) (head near set)) with request$3 with (server$1 (base near station)) and @ad<"20101010"	US-PGPUB; USPAT; USOCR	OR	ON	2019/06/21 12:53

6/24/2019 10:56:00 AM
C:\Users\kdoan\Documents\EAST\Workspaces\12936488.wsp

UNITED STATES PATENT AND TRADEMARK OFFICE

UNITED STATES DEPARTMENT OF COMMERCE
United States Patent and Trademark Office
Address: COMMISSIONER FOR PATENTS
P.O. Box 1450
Alexandria, Virginia 22313-1450
www.uspto.gov

APPLICATION NUMBER	FILING or 371(c) DATE	GRP ART UNIT	FIL FEE REC'D	ATTY.DOCKET.NO	TOT CLAIMS	IND CLAIMS
16/375,879	04/05/2019	2649	2735	080188PCTUSCON10	59	1

CONFIRMATION NO. 1056

FILING RECEIPT

26285
K&L GATES LLP-Pittsburgh
210 SIXTH AVENUE
PITTSBURGH, PA 15222-2613

OC000000107520010

Date Mailed: 04/22/2019

Receipt is acknowledged of this non-provisional patent application. The application will be taken up for examination in due course. Applicant will be notified as to the results of the examination. Any correspondence concerning the application must include the following identification information: the U.S. APPLICATION NUMBER, FILING DATE, NAME OF APPLICANT, and TITLE OF INVENTION. Fees transmitted by check or draft are subject to collection. Please verify the accuracy of the data presented on this receipt. **If an error is noted on this Filing Receipt, please submit a written request for a Filing Receipt Correction. Please provide a copy of this Filing Receipt with the changes noted thereon. If you received a "Notice to File Missing Parts" for this application, please submit any corrections to this Filing Receipt with your reply to the Notice. When the USPTO processes the reply to the Notice, the USPTO will generate another Filing Receipt incorporating the requested corrections**

Inventor(s)

Michael J. Koss, Milwaukee, WI;
Michael J. Pelland, Princeton, WI;
Michael Sagan, Fairfield, CA;
Steven R. Reckamp, Crystal Lake, IL;
Gregory J. Hallingstad, Deforest, WI;
Jeffery K. Bovee, Sterling, IL;
Morgan J. Lowery, Deforest, WI;

Applicant(s)

Koss Corporation, Milmaukee, WI;

Power of Attorney: The patent practitioners associated with Customer Number 26285

Domestic Priority data as claimed by applicant

This application is a CON of 16/182,927 11/07/2018
which is a CON of 15/962,305 04/25/2018 PAT 10206025
which is a CON of 15/650,362 07/14/2017 PAT 9986325
which is a CON of 15/293,785 10/14/2016 PAT 9729959
which is a CON of 15/082,040 03/28/2016 PAT 9497535
which is a CON of 14/695,696 04/24/2015 PAT 9438987
which is a CON of 13/609,409 09/11/2012 PAT 9049502
which is a CON of 13/459,291 04/30/2012 PAT 8571544
which is a CON of 12/936,488 12/20/2010 PAT 8190203
which is a 371 of PCT/US2009/039754 04/07/2009
which claims benefit of 61/123,265 04/07/2008

Foreign Applications for which priority is claimed (You may be eligible to benefit from the **Patent Prosecution Highway** program at the USPTO. Please see http://www.uspto.gov for more information.) - None.
Foreign application information must be provided in an Application Data Sheet in order to constitute a claim to foreign priority. See 37 CFR 1.55 and 1.76.

Permission to Access Application via Priority Document Exchange: Yes

Permission to Access Search Results: Yes

Applicant may provide or rescind an authorization for access using Form PTO/SB/39 or Form PTO/SB/69 as appropriate.

If Required, Foreign Filing License Granted: 04/18/2019

The country code and number of your priority application, to be used for filing abroad under the Paris Convention, is **US 16/375,879**

Projected Publication Date: 08/01/2019

Non-Publication Request: No

Early Publication Request: No

**** SMALL ENTITY ****

Title

SYSTEM WITH WIRELESS EARPHONES

Preliminary Class

455

Statement under 37 CFR 1.55 or 1.78 for AIA (First Inventor to File) Transition Applications: No

PROTECTING YOUR INVENTION OUTSIDE THE UNITED STATES

Since the rights granted by a U.S. patent extend only throughout the territory of the United States and have no effect in a foreign country, an inventor who wishes patent protection in another country must apply for a patent in a specific country or in regional patent offices. Applicants may wish to consider the filing of an international application under the Patent Cooperation Treaty (PCT). An international (PCT) application generally has the same effect as a regular national patent application in each PCT-member country. The PCT process **simplifies** the filing of patent applications on the same invention in member countries, but **does not result** in a grant of "an international patent" and does not eliminate the need of applicants to file additional documents and fees in countries where patent protection is desired.

Almost every country has its own patent law, and a person desiring a patent in a particular country must make an application for patent in that country in accordance with its particular laws. Since the laws of many countries differ in various respects from the patent law of the United States, applicants are advised to seek guidance from specific foreign countries to ensure that patent rights are not lost prematurely.

Applicants also are advised that in the case of inventions made in the United States, the Director of the USPTO must issue a license before applicants can apply for a patent in a foreign country. The filing of a U.S. patent application serves as a request for a foreign filing license. The application's filing receipt contains further information and guidance as to the status of applicant's license for foreign filing.

Applicants may wish to consult the USPTO booklet, "General Information Concerning Patents" (specifically, the section entitled "Treaties and Foreign Patents") for more information on timeframes and deadlines for filing foreign patent applications. The guide is available either by contacting the USPTO Contact Center at 800-786-9199, or it can be viewed on the USPTO website at http://www.uspto.gov/web/offices/pac/doc/general/index.html.

For information on preventing theft of your intellectual property (patents, trademarks and copyrights), you may wish to consult the U.S. Government website, http://www.stopfakes.gov. Part of a Department of Commerce initiative, this website includes self-help "toolkits" giving innovators guidance on how to protect intellectual property in specific countries such as China, Korea and Mexico. For questions regarding patent enforcement issues, applicants may call the U.S. Government hotline at 1-866-999-HALT (1-866-999-4258).

LICENSE FOR FOREIGN FILING UNDER

Title 35, United States Code, Section 184

Title 37, Code of Federal Regulations, 5.11 & 5.15

GRANTED

The applicant has been granted a license under 35 U.S.C. 184, if the phrase "IF REQUIRED, FOREIGN FILING LICENSE GRANTED" followed by a date appears on this form. Such licenses are issued in all applications where the conditions for issuance of a license have been met, regardless of whether or not a license may be required as set forth in 37 CFR 5.15. The scope and limitations of this license are set forth in 37 CFR 5.15(a) unless an earlier license has been issued under 37 CFR 5.15(b). The license is subject to revocation upon written notification. The date indicated is the effective date of the license, unless an earlier license of similar scope has been granted under 37 CFR 5.13 or 5.14.

This license is to be retained by the licensee and may be used at any time on or after the effective date thereof unless it is revoked. This license is automatically transferred to any related applications(s) filed under 37 CFR 1.53(d). This license is not retroactive.

The grant of a license does not in any way lessen the responsibility of a licensee for the security of the subject matter as imposed by any Government contract or the provisions of existing laws relating to espionage and the national security or the export of technical data. Licensees should apprise themselves of current regulations especially with respect to certain countries, of other agencies, particularly the Office of Defense Trade Controls, Department of State (with respect to Arms, Munitions and Implements of War (22 CFR 121-128)); the Bureau of Industry and Security, Department of Commerce (15 CFR parts 730-774); the Office of Foreign AssetsControl, Department of Treasury (31 CFR Parts 500+) and the Department of Energy.

NOT GRANTED

No license under 35 U.S.C. 184 has been granted at this time, if the phrase "IF REQUIRED, FOREIGN FILING LICENSE GRANTED" DOES NOT appear on this form. Applicant may still petition for a license under 37 CFR 5.12, if a license is desired before the expiration of 6 months from the filing date of the application. If 6 months has lapsed from the filing date of this application and the licensee has not received any indication of a secrecy order under 35 U.S.C. 181, the licensee may foreign file the application pursuant to 37 CFR 5.15(b).

SelectUSA

The United States represents the largest, most dynamic marketplace in the world and is an unparalleled location for business investment, innovation, and commercialization of new technologies. The U.S. offers tremendous resources and advantages for those who invest and manufacture goods here. Through SelectUSA, our nation works to promote and facilitate business investment. SelectUSA provides information assistance to the international investor community; serves as an ombudsman for existing and potential investors; advocates on behalf of U.S. cities, states, and regions competing for global investment; and counsels U.S. economic development organizations on investment attraction best practices. To learn more about why the United States is the best country in the world to develop technology, manufacture products, deliver services, and grow your business, visit http://www.SelectUSA.gov or call +1-202-482-6800.

PATENT APPLICATION FEE DETERMINATION RECORD

Substitute for Form PTO-875

Application or Docket Number: 16/375,879

APPLICATION AS FILED - PART I

FOR	(Column 1) NUMBER FILED	(Column 2) NUMBER EXTRA	SMALL ENTITY RATE($)	SMALL ENTITY FEE($)	OR	OTHER THAN SMALL ENTITY RATE($)	OTHER THAN SMALL ENTITY FEE($)
BASIC FEE (37 CFR 1.16(a), (b), or (c))	N/A	N/A	N/A	75		N/A	
SEARCH FEE (37 CFR 1.16(k), (i), or (m))	N/A	N/A	N/A	330		N/A	
EXAMINATION FEE (37 CFR 1.16(o), (p), or (q))	N/A	N/A	N/A	380		N/A	
TOTAL CLAIMS (37 CFR 1.16(i))	59 minus 20 =	* 39	x 50 =	1950	OR		
INDEPENDENT CLAIMS (37 CFR 1.16(h))	1 minus 3 =	*	x 230 =	0.00			
APPLICATION SIZE FEE (37 CFR 1.16(s))	If the specification and drawings exceed 100 sheets of paper, the application size fee due is $310 ($155 for small entity) for each additional 50 sheets or fraction thereof. See 35 U.S.C. 41(a)(1)(G) and 37 CFR 1.16(s).			0.00			
MULTIPLE DEPENDENT CLAIM PRESENT (37 CFR 1.16(j))				0.00			
* If the difference in column 1 is less than zero, enter "0" in column 2.			TOTAL	2735		TOTAL	

APPLICATION AS AMENDED - PART II

AMENDMENT A

	(Column 1) CLAIMS REMAINING AFTER AMENDMENT		(Column 2) HIGHEST NUMBER PREVIOUSLY PAID FOR	(Column 3) PRESENT EXTRA	SMALL ENTITY RATE($)	SMALL ENTITY ADDITIONAL FEE($)	OR	OTHER THAN SMALL ENTITY RATE($)	OTHER THAN SMALL ENTITY ADDITIONAL FEE($)
Total (37 CFR 1.16(i))	*	Minus	**	=	x =		OR	x =	
Independent (37 CFR 1.16(h))	*	Minus	***	=	x =		OR	x =	
Application Size Fee (37 CFR 1.16(s))									
FIRST PRESENTATION OF MULTIPLE DEPENDENT CLAIM (37 CFR 1.16(j))							OR		
					TOTAL ADD'L FEE		OR	TOTAL ADD'L FEE	

AMENDMENT B

	(Column 1) CLAIMS REMAINING AFTER AMENDMENT		(Column 2) HIGHEST NUMBER PREVIOUSLY PAID FOR	(Column 3) PRESENT EXTRA	RATE($)	ADDITIONAL FEE($)		RATE($)	ADDITIONAL FEE($)
Total (37 CFR 1.16(i))	*	Minus	**	=	x =		OR	x =	
Independent (37 CFR 1.16(h))	*	Minus	***	=	x =		OR	x =	
Application Size Fee (37 CFR 1.16(s))									
FIRST PRESENTATION OF MULTIPLE DEPENDENT CLAIM (37 CFR 1.16(j))							OR		
					TOTAL ADD'L FEE		OR	TOTAL ADD'L FEE	

* If the entry in column 1 is less than the entry in column 2, write "0" in column 3.
** If the "Highest Number Previously Paid For" IN THIS SPACE is less than 20, enter "20".
*** If the "Highest Number Previously Paid For" IN THIS SPACE is less than 3, enter "3".
The "Highest Number Previously Paid For" (Total or Independent) is the highest found in the appropriate box in column 1.

IN THE UNITED STATES PATENT AND TRADEMARK OFFICE

Applicant:	Koss Corporation	**Examiner:**	TBD
Inventor(s):	Michael J. Koss, et al.	**Art Unit:**	TBD
Application No.:	16/375,879	**Atty. Docket No**.	080188PCTUSCON10
Filing Date:	April 8, 2019	**Conf. No.:**	1056

Title: SYSTEM WITH WIRELESS EARPHONES

PRELIMINARY AMENDMENT

K&L Gates, LLP
Pittsburgh, PA 15222
April 8, 2019

VIA EFS (WEB)

Mail Stop Amendment
Commissioner for Patents
Box 1450
Alexandria, VA 22313-1450

Dear Commissioner:

Prior to examination and prior to the calculation of the applicable application filing fees, please amend the above-referenced application ("the Subject Application") as follows, wherein:

Amendments to the Claims begin on page 2; and

Remarks begin on page 14.

502142506 v2

Amendments to the Claims

Please amend the claims as follows. The following is a complete listing of the claims that replaces all previous versions.

1. (Canceled)

2. (New) A headphone assembly comprising:

first and second earphones, wherein each of the first and second earphones comprises an acoustic transducer; and

an antenna for receiving wireless signals from a mobile, digital audio player via one or more ad hoc wireless communication links;

a wireless communication circuit connected to the antenna, wherein the wireless communication circuit is for receiving and transmitting wireless signals to and from the headphone assembly;

a processor;

a rechargeable battery for powering the headphone assembly; and

a microphone for picking up utterances by a user of the headphone assembly; and

wherein the headphone assembly is configured to play, by the first and second earphones, digital audio content transmitted by the mobile, digital audio player via the one or more ad hoc wireless communication links; and

wherein the processor is configured to, upon activation of a user-control of the headphone assembly, initiate transmission of a request to a remote, network-connected server that is in wireless communication with the mobile, digital audio player.

3. (New) The headphone assembly of claim 2, wherein:

in a first audio play mode, the first and second earphones play audio content stored on a mobile, digital audio player and transmitted to the headphone assembly from the mobile, digital audio player via the one or more ad hoc wireless communication links; and

in a second audio play mode, the earphones play audio content streamed from the remote, network-connected server.

4. (New) The headphone assembly of claim 2, wherein the processor is for:

processing audible utterances by the user picked up by the microphone in response to activation of the microphone by the user; and

transmitting a communication based on the audible utterances via the one or more ad hoc wireless communication links.

5. (New) The headphone assembly of claim 3, wherein the processor is for:

processing audible utterances by the user picked up by the microphone in response to activation of the microphone by the user; and

transmitting a communication based on the audible utterances via the one or more ad hoc wireless communication links.

6. (New) The headphone assembly of claim 2, wherein upon activation of the microphone by the user, data are transmitted about the headphone assembly to a remote device.

7. (New) The headphone assembly of claim 2, wherein:

the mobile, digital audio player is a first digital audio source;

the headphone assembly transitions to play digital audio content received wirelessly from a second digital audio source via a second wireless communication link based on, at least, a signal strength level for the second wireless communication link, wherein the second digital audio source is different from the first digital audio source.

8. (New) The headphone assembly of claim 3, wherein:

the mobile, digital audio player is a first digital audio source;

the headphone assembly transitions to play digital audio content received wirelessly from a second digital audio source via a second wireless communication link based on, at least, a signal strength level for the second wireless communication link, wherein the second digital audio source is different from the first digital audio source.

9. (New) The headphone assembly of claim 4, wherein:

the mobile, digital audio player is a first digital audio source;

the headphone assembly transitions to play digital audio content received wirelessly from a second digital audio source via a second wireless communication link based on, at least, a signal strength level for the second wireless communication link, wherein the second digital audio source is different from the first digital audio source.

10. (New) The headphone assembly of claim 5, wherein:
the mobile, digital audio player is a first digital audio source;
the headphone assembly transitions to play digital audio content received wirelessly from a second digital audio source via a second wireless communication link based on, at least, a signal strength level for the second wireless communication link, wherein the second digital audio source is different from the first digital audio source.

11. (New) The headphone assembly of claim 2, wherein the headphone assembly is for receiving firmware upgrades transmitted from the remote, network-connected server.

12. (New) The headphone assembly of claim 3, wherein:
the wireless communication circuit is located in the first earphone; and
the headphone assembly further comprises a connection wire between the first and second earphones to carry the received digital audio content from the first earphone to the second earphone.

13. (New) The headphone assembly of claim 2, wherein:
in a first audio play mode, the first and second earphones play audio content stored on the mobile, digital audio player and transmitted to the headphone assembly from the mobile, digital audio player via the one or more ad hoc wireless communication links; and
in a second audio play mode, the earphones play audio content streamed from the remote, network-connected server.

14. (New) The headphone assembly of claim 12, wherein the processor is for:
processing audible utterances by the user picked up by the microphone in response to activation of the microphone by the user; and

transmitting a communication based on the audible utterances via the one or more ad hoc wireless communication links.

15. (New) The headphone assembly of claim 13, wherein the processor is for:

processing audible utterances by the user picked up by the microphone in response to activation of the microphone by the user; and

transmitting a communication based on the audible utterances via the one or more ad hoc wireless communication links.

16. (New) The headphone assembly of claim 2, wherein upon activation of the microphone by the user, data are transmitted about the headphone assembly to a remote device.

17. (New) The headphone assembly of claim 12, wherein:

the mobile, digital audio player is a first digital audio source;

the headphone assembly transitions to play digital audio content received wirelessly from a second digital audio source via a second wireless communication link based on, at least, a signal strength level for the second wireless communication link, wherein the second digital audio source is different from the first digital audio source.

18. (New) The headphone assembly of claim 13, wherein:

the mobile, digital audio player is a first digital audio source;

the headphone assembly transitions to play digital audio content received wirelessly from a second digital audio source via a second wireless communication link based on, at least, a signal strength level for the second wireless communication link, wherein the second digital audio source is different from the first digital audio source.

19. (New) The headphone assembly of claim 14, wherein:

the mobile, digital audio player is a first digital audio source;

the headphone assembly transitions to play digital audio content received wirelessly from a second digital audio source via a second wireless communication link based on, at least, a

signal strength level for the second wireless communication link, wherein the second digital audio source is different from the first digital audio source.

20. (New) The headphone assembly of claim 15, wherein:
the mobile, digital audio player is a first digital audio source;
the headphone assembly transitions to play digital audio content received wirelessly from a second digital audio source via a second wireless communication link based on, at least, a signal strength level for the second wireless communication link, wherein the second digital audio source is different from the first digital audio source.

21. (New) The headphone assembly of claim 12, wherein the headphone assembly further comprises a headband, and wherein the headband carries the connection wire.

22. (New) The headphone assembly of claim 21, wherein:
in a first audio play mode, the first and second earphones play audio content stored on the mobile, digital audio player and transmitted to the headphone assembly from the mobile, digital audio player via the one or more ad hoc wireless communication links; and
in a second audio play mode, the earphones play audio content streamed from the remote, network-connected server.

23. (New) The headphone assembly of claim 21, wherein the processor is for:
processing audible utterances by the user picked up by the microphone in response to activation of the microphone by the user; and
transmitting a communication based on the audible utterances via the one or more ad hoc wireless communication links.

24. (New) The headphone assembly of claim 22, wherein the processor is for:
processing audible utterances by the user picked up by the microphone in response to activation of the microphone by the user; and
transmitting a communication based on the audible utterances via the one or more ad hoc wireless communication links.

25. (New) The headphone assembly of claim 21, wherein upon activation of the microphone by the user, data are transmitted about the headphone assembly to a remote device.

26. (New) The headphone assembly of claim 21, wherein:
the mobile, digital audio player is a first digital audio source;
the headphone assembly transitions to play digital audio content received wirelessly from a second digital audio source via a second wireless communication link based on, at least, a signal strength level for the second wireless communication link, wherein the second digital audio source is different from the first digital audio source.

27. (New) The headphone assembly of claim 22, wherein:
the mobile, digital audio player is a first digital audio source;
the headphone assembly transitions to play digital audio content received wirelessly from a second digital audio source via a second wireless communication link based on, at least, a signal strength level for the second wireless communication link, wherein the second digital audio source is different from the first digital audio source.

28. (New) The headphone assembly of claim 23, wherein:
the mobile, digital audio player is a first digital audio source;
the headphone assembly transitions to play digital audio content received wirelessly from a second digital audio source via a second wireless communication link based on, at least, a signal strength level for the second wireless communication link, wherein the second digital audio source is different from the first digital audio source.

29. (New) The headphone assembly of claim 24, wherein:
the mobile, digital audio player is a first digital audio source;
the headphone assembly transitions to play digital audio content received wirelessly from a second digital audio source via a second wireless communication link based on, at least, a signal strength level for the second wireless communication link, wherein the second digital audio source is different from the first digital audio source.

30. (New) The headphone assembly of claim 12, wherein each of the first and second earphones further comprises:

an adjustable, curved hanger bar that sits upon an upper external curvature of the user's ear, behind an upper portion of an auricula of the user's ear, when the headphone assembly is worn by the user; and

a body connected to the hanger bar, wherein the earphone extends from the body into the user's ear when the headphone assembly is worn by the user.

31. (New) The headphone assembly of claim 30, wherein:

in a first audio play mode, the first and second earphones play audio content stored on the mobile, digital audio player and transmitted to the headphone assembly from the mobile, digital audio player via the one or more ad hoc wireless communication links; and

in a second audio play mode, the earphones play audio content streamed from the remote, network-connected server.

32. (New) The headphone assembly of claim 30, wherein the processor is for:

processing audible utterances by the user picked up by the microphone in response to activation of the microphone by the user; and

transmitting a communication based on the audible utterances via the one or more ad hoc wireless communication links.

33. (New) The headphone assembly of claim 31, wherein:

processing audible utterances by the user picked up by the microphone in response to activation of the microphone by the user; and

transmitting a communication based on the audible utterances via the one or more ad hoc wireless communication links.

34. (New) The headphone assembly of claim 30, wherein upon activation of the microphone by the user, data are transmitted about the headphone assembly to a remote device.

35. (New) The headphone assembly of claim 30, wherein:
the mobile, digital audio player is a first digital audio source;
the headphone assembly transitions to play digital audio content received wirelessly from a second digital audio source via a second wireless communication link based on, at least, a signal strength level for the second wireless communication link, wherein the second digital audio source is different from the first digital audio source.

36. (New) The headphone assembly of claim 31, wherein:
the mobile, digital audio player is a first digital audio source;
the headphone assembly transitions to play digital audio content received wirelessly from a second digital audio source via a second wireless communication link based on, at least, a signal strength level for the second wireless communication link, wherein the second digital audio source is different from the first digital audio source.

37. (New) The headphone assembly of claim 32, wherein:
the mobile, digital audio player is a first digital audio source;
the headphone assembly transitions to play digital audio content received wirelessly from a second digital audio source via a second wireless communication link based on, at least, a signal strength level for the second wireless communication link, wherein the second digital audio source is different from the first digital audio source.

38. (New) The headphone assembly of claim 33, wherein:
the mobile, digital audio player is a first digital audio source;
the headphone assembly transitions to play digital audio content received wirelessly from a second digital audio source via a second wireless communication link based on, at least, a signal strength level for the second wireless communication link, wherein the second digital audio source is different from the first digital audio source.

39. (New) The headphone assembly of claim 12, wherein the headphone assembly is for receiving firmware upgrades transmitted from the remote, network-connected server transmits .

40. (New) The headphone assembly of claim 12, wherein each of the first and second earphones comprise earbuds.

41. (New) The headphone assembly of claim 2, wherein:
the wireless circuit comprises first and second wireless circuit;
the first wireless circuit is in the first earphone; and
the second wireless circuit is in the second earphone.

42. (New) The headphone assembly of claim 40, wherein each of the first and second earphones comprises:
a body portion that sits at least partially in an ear of the user when the headphone assembly is worn by the user; and
an elongated portion that extends from the body portion.

43. (New) The headphone assembly of claim 42, wherein at least one of the first and second earphones is charged by a docking station.

44. (New) The headphone assembly of claim 43, wherein:
in a first audio play mode, the first and second earphones play audio content stored on a mobile, digital audio player and transmitted to the headphone assembly from the mobile, digital audio player via the one or more ad hoc wireless communication links; and
in a second audio play mode, the earphones play audio content streamed from the remote, network-connected server.

45. (New) The headphone assembly of claim 43, wherein the processor is for:
processing audible utterances by the user picked up by the microphone in response to activation of the microphone by the user; and
transmitting a communication based on the audible utterances via the one or more ad hoc wireless communication links.

46. (New) The headphone assembly of claim 44, wherein the processor is for:

processing audible utterances by the user picked up by the microphone in response to activation of the microphone by the user; and

transmitting a communication based on the audible utterances via the one or more ad hoc wireless communication links.

47. (New) The headphone assembly of claim 41, wherein each of the first and second earphones further comprises:

an adjustable, curved hanger bar that sits upon an upper external curvature of the user's ear, behind an upper portion of an auricula of the user's ear, when the headphone assembly is worn by the user; and

a body connected to the hanger bar, wherein the earphone extends from the body into the user's ear when the headphone assembly is worn by the user.

48. (New) The headphone assembly of claim 47, wherein at least one of the first and second earphones is charged by a docking station.

49. (New) The headphone assembly of claim 47, wherein:

the mobile, digital audio player is a first digital audio source;

the headphone assembly transitions to play digital audio content received wirelessly from a second digital audio source via a second wireless communication link based on, at least, a signal strength level for the second wireless communication link, wherein the second digital audio source is different from the first digital audio source

50. (New) The headphone assembly of claim 2, wherein upon activation of the microphone by the user, data are transmitted about the headphone assembly to a remote device.

51. (New) The headphone assembly of claim 42, wherein:

the mobile, digital audio player is a first digital audio source;

the headphone assembly transitions to play digital audio content received wirelessly from a second digital audio source via a second wireless communication link based on, at least, a

signal strength level for the second wireless communication link, wherein the second digital audio source is different from the first digital audio source.

52. (New) The headphone assembly of claim 44, wherein:
the mobile, digital audio player is a first digital audio source;
the headphone assembly transitions to play digital audio content received wirelessly from a second digital audio source via a second wireless communication link based on, at least, a signal strength level for the second wireless communication link, wherein the second digital audio source is different from the first digital audio source.

53. (New) The headphone assembly of claim 45, wherein:
the mobile, digital audio player is a first digital audio source;
the headphone assembly transitions to play digital audio content received wirelessly from a second digital audio source via a second wireless communication link based on, at least, a signal strength level for the second wireless communication link, wherein the second digital audio source is different from the first digital audio source.

54. (New) The headphone assembly of claim 41, wherein the headphone assembly is for receiving firmware upgrades transmitted from the remote, network-connected server.

55. (New) The headphone assembly of claim 2, wherein the headphone assembly further comprises first and second integrated circuits, wherein the first integrated circuit comprises the wireless communication circuit and the second integrated circuit, which is separate from the first integrated circuit, comprises the processor.

56. (New) The headphone assembly of claim 2, wherein each of the first and second earphones further comprises:
an adjustable, curved hanger bar that sits upon an upper external curvature of the user's ear, behind an upper portion of an auricula of the user's ear, when the headphone assembly is worn by the user; and

a body connected to the hanger bar, wherein the earphone extends from the body into the user's ear when the headphone assembly is worn by the user.

57. (New) The headphone assembly of claim 2, wherein each of the first and second earphones comprise earbuds.

58. (New) The headphone assembly of claim 2, wherein each of the first and second earphones comprise on-ear speaker elements.

59. (New) The headphone assembly of claim 2, wherein each of the first and second earphones comprise over-ear speaker elements.

60. (New) The headphone assembly of claim 47, wherein the headphone assembly is for receiving firmware upgrades transmitted from the remote, network-connected server

REMARKS

In this preliminary amendment, Applicant has canceled original claim 1 without prejudice or disclaimer and added new claims 2-60. Support for the new claims may be found throughout the application as originally filed; no new matter is added. New claims 2-60 are similar to the claims of U.S. Patent 10, 206,025 ("the '025 Patent"), to which the Subject Application claims priority. To expedite prosecution, Applicant has filed a terminal disclaimer referencing the '025 Patent.

Applicant is paying the requisite fees for the additional claims and the Office is authorized to charge any additionally needed fees for consideration of this amendment to Account No. 02-1818. To the extent that an extension of time is required and is not otherwise addressed, Applicant hereby petitions for the same and requests that the fee be charged to Deposit Account 02-1818.

A representative of the Office is invited to contact the undersigned with any questions regarding this application or this preliminary amendment.

Respectfully submitted,

Date: April 8, 2019

/Mark G. Knedeisen/
Mark G. Knedeisen
Reg. No. 42,747

K&L GATES LLP
K&L Gates Center
210 Sixth Ave.
Pittsburgh, Pennsylvania 15222

Ph. (412) 355-6342
Fax (412) 355-6501
email: mark.knedeisen@klgates.com

Electronic Patent Application Fee Transmittal					
Application Number:	16375879				
Filing Date:					
Title of Invention:	SYSTEM WITH WIRELESS EARPHONES				
First Named Inventor/Applicant Name:	Michael J. Koss				
Filer:	Mark G. Knedeisen/Amanda Kernan				
Attorney Docket Number:	080188PCTUSCON10				
Filed as Small Entity					
Filing Fees for Utility under 35 USC 111(a)					
Description		**Fee Code**	**Quantity**	**Amount**	**Sub-Total in USD($)**
Basic Filing:					
Pages:					
Claims:					
CLAIMS IN EXCESS OF 20		2202	39	50	1950
Miscellaneous-Filing:					
Petition:					
Patent-Appeals-and-Interference:					
Post-Allowance-and-Post-Issuance:					

Description	Fee Code	Quantity	Amount	Sub-Total in USD($)
Extension-of-Time:				
Miscellaneous:				
STATUTORY OR TERMINAL DISCLAIMER	2814	1	160	160
		Total in USD ($)		**2110**

Electronic Acknowledgement Receipt	
EFS ID:	35651155
Application Number:	16375879
International Application Number:	
Confirmation Number:	1056
Title of Invention:	SYSTEM WITH WIRELESS EARPHONES
First Named Inventor/Applicant Name:	Michael J. Koss
Customer Number:	26285
Filer:	Mark G. Knedeisen/Amanda Kernan
Filer Authorized By:	Mark G. Knedeisen
Attorney Docket Number:	080188PCTUSCON10
Receipt Date:	08-APR-2019
Filing Date:	
Time Stamp:	12:04:14
Application Type:	Utility under 35 USC 111(a)

Payment information:

Submitted with Payment	yes
Payment Type	DA
Payment was successfully received in RAM	$2110
RAM confirmation Number	040819INTEFSW00012011021818
Deposit Account	021818
Authorized User	Amanda Kernan
The Director of the USPTO is hereby authorized to charge indicated fees and credit any overpayment as follows: 37 CFR 1.16 (National application filing, search, and examination fees) 37 CFR 1.17 (Patent application and reexamination processing fees)	

File Listing:

Document Number	Document Description	File Name	File Size(Bytes)/ Message Digest	Multi Part /.zip	Pages (if appl.)
1	Terminal Disclaimer Filed	4-8-2019-080188PCTUSCON10-Terminal-Disclaimer.pdf	125123 33c061cca66947a1a4dde7b61bc427e4f44b6a34	no	1
Warnings:					
Information:					
2	Miscellaneous Incoming Letter	4-8-2019-Amendment-transmittal.pdf	145410 b9db1e895973c186193d3a835598256899d89381	no	4
Warnings:					
Information:					
3		4-8-2019-080188PCTUSCON10-Preliminary-Amendment.pdf	131561 dc2691c4efba24902c05a245ee7fcf224bb18511	yes	14

Multipart Description/PDF files in .zip description

Document Description	Start	End
Preliminary Amendment	1	1
Claims	2	13
Applicant Arguments/Remarks Made in an Amendment	14	14

Warnings:					
Information:					
4	Fee Worksheet (SB06)	fee-info.pdf	31951 8ee9ffa9858fca85bcde27897683e7aa9e348945	no	2
Warnings:					
Information:					
		Total Files Size (in bytes):	434045		

This Acknowledgement Receipt evidences receipt on the noted date by the USPTO of the indicated documents, characterized by the applicant, and including page counts, where applicable. It serves as evidence of receipt similar to a Post Card, as described in MPEP 503.

New Applications Under 35 U.S.C. 111

If a new application is being filed and the application includes the necessary components for a filing date (see 37 CFR 1.53(b)-(d) and MPEP 506), a Filing Receipt (37 CFR 1.54) will be issued in due course and the date shown on this Acknowledgement Receipt will establish the filing date of the application.

National Stage of an International Application under 35 U.S.C. 371

If a timely submission to enter the national stage of an international application is compliant with the conditions of 35 U.S.C. 371 and other applicable requirements a Form PCT/DO/EO/903 indicating acceptance of the application as a national stage submission under 35 U.S.C. 371 will be issued in addition to the Filing Receipt, in due course.

New International Application Filed with the USPTO as a Receiving Office

If a new international application is being filed and the international application includes the necessary components for an international filing date (see PCT Article 11 and MPEP 1810), a Notification of the International Application Number and of the International Filing Date (Form PCT/RO/105) will be issued in due course, subject to prescriptions concerning national security, and the date shown on this Acknowledgement Receipt will establish the international filing date of the application.

PTO/AIA/26 (04-14)
Approved for use through 11/30/2020. OMB 0651-0031
U.S. Patent and Trademark Office; U.S. DEPARTMENT OF COMMERCE
Under the Paperwork Reduction Act of 1995, no persons are required to respond to a collection of information unless it displays a valid OMB control number.

TERMINAL DISCLAIMER TO OBVIATE A DOUBLE PATENTING REJECTION OVER A "PRIOR" PATENT	Docket Number (Optional) 080188PCTUSCON10

In re Application of: Koss Corporation

Application No.: 16/375,879

Filed: April 5, 2019

For: SYSTEM WITH WIRELESS EARPHONES

The applicant, Koss Corporation, owner of 100 percent interest in the instant application hereby disclaims, except as provided below, the terminal part of the statutory term of any patent granted on the instant application which would extend beyond the expiration date of the full statutory term of **prior patent** No. 10,206,025 as the term of said **prior patent** is presently shortened by any terminal disclaimer. The applicant hereby agrees that any patent so granted on the instant application shall be enforceable only for and during such period that it and the **prior patent** are commonly owned. This agreement runs with any patent granted on the instant application and is binding upon the grantee, its successors or assigns.

In making the above disclaimer, the applicant does not disclaim the terminal part of the term of any patent granted on the instant application that would extend to the expiration date of the full statutory term of the **prior patent**, "as the term of said **prior patent** is presently shortened by any terminal disclaimer," in the event that said **prior patent** later:

expires for failure to pay a maintenance fee;
is held unenforceable;
is found invalid by a court of competent jurisdiction;
is statutorily disclaimed in whole or terminally disclaimed under 37 CFR 1.321;
has all claims canceled by a reexamination certificate;
is reissued; or
is in any manner terminated prior to the expiration of its full statutory term as presently shortened by any terminal disclaimer.

Check either box 1 or 2 below, if appropriate.

1. ☐ The undersigned is the applicant. If the applicant is an assignee, the undersigned is authorized to act on behalf of the assignee.

I hereby acknowledge that any willful false statements made are punishable under 18 U.S.C. 1001 by fine or imprisonment of not more than five (5) years, or both.

2. ☑ The undersigned is an attorney or agent of record. Reg. No. 42,747

/Mark G. Knedeisen/ — Signature
April 8, 2019 — Date

Mark G. Knedeisen — Typed or printed name

Attorney — Title
412-355-6342 — Telephone Number

☑ Terminal disclaimer fee under 37 CFR 1.20(d) included.

WARNING: Information on this form may become public. Credit card information should not be included on this form. Provide credit card information and authorization on PTO-2038.

This collection of information is required by 37 CFR 1.321. The information is required to obtain or retain a benefit by the public which is to file (and by the USPTO to process) an application. Confidentiality is governed by 35 U.S.C. 122 and 37 CFR 1.11 and 1.14. This collection is estimated to take 12 minutes to complete, including gathering, preparing, and submitting the completed application form to the USPTO. Time will vary depending upon the individual case. Any comments on the amount of time you require to complete this form and/or suggestions for reducing this burden, should be sent to the Chief Information Officer, U.S. Patent and Trademark Office, U.S. Department of Commerce, P.O. Box 1450, Alexandria, VA 22313-1450. DO NOT SEND FEES OR COMPLETED FORMS TO THIS ADDRESS. **SEND TO: Commissioner for Patents, P.O. Box 1450, Alexandria, VA 22313-1450.**

If you need assistance in completing the form, call 1-800-PTO-9199 and select option 2.

PATENT

IN THE UNITED STATES PATENT AND TRADEMARK OFFICE

Applicant:	Koss Corporation	**Examiner:**	TBD
Inventor(s):	Michael J. Koss, et al.	**Art Unit:**	TBD
Application No.:	16/375,879	**Atty. Docket No**.	080188PCTUSCON10
Filing Date:	April 8, 2019	**Conf. No.:**	1056

Title: SYSTEM WITH WIRELESS EARPHONES

VIA EFS-Web April 8, 2019

Mail Stop Amendment
Commissioner for Patents
P.O. Box 1450
Alexandria, VA 22313-1450

AMENDMENT TRANSMITTAL

1. Transmitted herewith is an amendment for this application.

STATUS

2. Applicant is

☒ A statement that this filing is by a small entity is hereby asserted in accordance with the rule change effective September 8, 2000, 65 Fed. Reg. 54603.

☐ other than a small entity.

502173071

EXTENSION OF TERM

NOTE: "Extension of Time in Patent Cases (Supplement Amendments) - If a timely and complete response has been filed after a Non-Final Office Action, an extension of time is not required to permit filing and/or entry of an additional amendment after expiration of the shortened statutory period.

If a timely response has been filed after a Final Office Action, an extension of time is required to permit filing and/or entry of a Notice of Appeal or filing and/or entry of an additional amendment after expiration of the shortened statutory period unless the timely-filed response placed the application in condition for allowance. Of course, if a Notice of Appeal has been filed within the shortened statutory period, the period has ceased to run." Notice of December 10, 1985 (1061 O.G. 34-35).

NOTE: See 37 CFR 1.645 for extensions of time in interference proceedings, and 37 CFR 1.550(c) for extensions of time in reexamination proceedings.

3. The proceedings herein are for a patent application and the provisions of 37 CFR 1.136 apply.

(complete (a) or (b), as applicable)

(a) ☐ Applicant petitions for an extension of time under 37 CFR 1.136 (fees: 37 CFR 1.17(a)-(d) for the total number of months checked below:

Extension (months)	Fee for other than small entity	Fee for small entity
☐ one month	$ 200.00	$ 100.00
☐ two months	$ 600.00	$ 300.00
☐ three months	$1,400.00	$ 700.00
☐ four months	$2,200.00	$ 1,100.00

Fee: $

If an additional **extension** of time is required, please consider this a petition therefor.

(check and complete the next item, if applicable)

☐ An extension for _____ months has already been secured and the fee paid therefor of $_____ is deducted from the total fee due for the total months of extension now requested.

Extension fee due with this request **$**

OR

(b) ☒ Applicant believes that no extension of term is required. However, this conditional petition is being made to provide for the possibility that applicant has inadvertently overlooked the need for a petition for extension of time.

FEE FOR CLAIMS

4. The fee for claims (37 CFR 1.16(b)-(d) has been calculated as shown below:

(Col. 1)	(Col. 2)	(Col. 3)	SMALL ENTITY			OTHER THAN A SMALL ENTITY	
CLAIMS REMAINING AFTER AMENDMENT	HIGHEST NO PREVIOUSLY PAID FOR	PRESENT EXTRA	RATE	ADDIT. FEE	OR	RATE	ADDIT. FEE
TOTAL 59•	MINUS 20••	=39	X50=	$1,950		X100=	$0
INDEP. 1•	MINUS 3•••	=0	X230=	$0		X460=	$0
☐ FIRST PRESENTATION OF MULTIPLE DEP. CLAIM			+410=	$0		+820=	$0
			TOTAL ADDIT. FEE	$1,950	OR	TOTAL ADDIT. FEE	$0

- • If the entry in Col. 1 is less than entry in Col. 2, write ")" in Col. 3.
- •• If the "Highest No. Previously Paid for" IN THIS SPACE is less than 20, enter "20."
- ••• If the "Highest No. Previously Paid for" IN THIS SPACE is less than 3, enter "3."
  The "Highest No. Previously Paid for" (Total or indep.) is the highest number found in the appropriate box in Col. 1 of a prior amendment or the number of claims originally filed.

WARNING "After final rejection or action (§ 1.113) amendments may be made cancelling claims or complying with any requirement of form which has been made." 37 CFR § 1.116(a) (emphasis added).

Complete (c) or (d), as applicable)

(c) ☐ No additional fee for claims is required.

OR

(d) ☒ Total additional fee for claims required $ 1,950.00

FEE PAYMENT

5. ☐ Attached is a check in the sum of $ _____

☒ Charge Account No. 02-1818 the sum of $**1,950.00**

FEE DEFICIENCY

NOTE: If there is a fee deficiency and there is no authorization to charge an account, additional fees are necessary to cover the additional time consumed in making up the original deficiency. If the maximum, six-month period has expired before the deficiency is noted and corrected, the application is held abandoned. In those instances where authorization to charge is included, processing delays are encountered in returning the papers to the PTO Finance Branch in order to apply these charges prior to action on the cases. Authorization to charge the deposit account for any fee deficiency should be checked. See the Notice of April 7, 1986, (1065 O.G. 31-33).

6. ☒ If any additional extension and/or fee is required, charge Account No.

02-1818.

AND/OR

7. ☒ If any additional fee for claims is required, charge Account No.

02-1818.

/Mark G. Knedeisen/
SIGNATURE OF ATTORNEY

Reg. No.: 42,747

Mark G. Knedeisen
(type or print name of attorney)

Tel. No.: 412-355-6342

Customer No. 26285

K&L Gates LLP
P.O. Address
K&L Gates Center
210 Sixth Avenue
Pittsburgh, PA 15222-2613

PTO/AIA/15 (10-17)
Approved for use through 11/30/2020. OMB 0651-0032
U.S. Patent and Trademark Office; U.S. DEPARTMENT OF COMMERCE
Under the Paperwork Reduction Act of 1995 no persons are required to respond to a collection of information unless it displays a valid OMB control number.

UTILITY PATENT APPLICATION TRANSMITTAL

(Only for new nonprovisional applications under 37 CFR 1.53(b))

Attorney Docket No.	080188PCTUSCON10
First Named Inventor	Michael J. Koss
Title	SYSTEM WITH WIRELESS EARPHONES
Priority Mail Express® Label No.	

APPLICATION ELEMENTS

See MPEP chapter 600 concerning utility patent application contents.

1. [✓] **Fee Transmittal Form** (PTO/SB/17 or equivalent)
2. [✓] **Applicant asserts small entity status.** See 37 CFR 1.27
3. [ ] **Applicant certifies micro entity status.** See 37 CFR 1.29. Applicant must attach form PTO/SB/15A or B or equivalent.
4. [✓] **Specification** [*Total Pages* 26] Both the claims and abstract must start on a new page. *(See MPEP § 608.01(a) for information on the preferred arrangement)*
5. [✓] **Drawing(s)** (35 U.S.C. 113) [*Total Sheets* 16]
6. **Inventor's Oath or Declaration** [*Total Pages* 9] *(including substitute statements under 37 CFR 1.64 and assignments serving as an oath or declaration under 37 CFR 1.63(e))*
   a. [ ] Newly executed (original or copy)
   b. [✓] A copy from a prior application (37 CFR 1.63(d))
7. [✓] **Application Data Sheet** ** See note below.* See 37 CFR 1.76 (PTO/AIA/14 or equivalent)
8. **CD-ROM or CD-R** in duplicate, large table, or Computer Program (*Appendix*)
   [ ] Landscape Table on CD
9. **Nucleotide and/or Amino Acid Sequence Submission** (*if applicable, items a. – c. are required*)
   a. [ ] Computer Readable Form (CRF)
   b. [ ] Specification Sequence Listing on:
      i. [ ] CD-ROM or CD-R (2 copies); or
      ii. [ ] Paper
   c. [ ] Statements verifying identity of above copies

ADDRESS TO:

Commissioner for Patents
P.O. Box 1450
Alexandria, VA 22313-1450

ACCOMPANYING APPLICATION PAPERS

10. [ ] **Assignment Papers** (cover sheet & document(s))
    Name of Assignee _____
11. [ ] **37 CFR 3.73(c) Statement** [✓] **Power of Attorney** (*when there is an assignee*)
12. [ ] **English Translation Document** (*if applicable*)
13. [✓] **Information Disclosure Statement** (PTO/SB/08 or PTO-1449)
    [✓] Copies of citations attached
14. [ ] **Preliminary Amendment**
15. [ ] **Return Receipt Postcard** (*MPEP § 503*) (*Should be specifically itemized*)
16. [ ] **Certified Copy of Priority Document(s)** (*if foreign priority is claimed*)
17. [ ] **Nonpublication Request** Under 35 U.S.C. 122(b)(2)(B)(i). Applicant must attach form PTO/SB/35 or equivalent.
18. [ ] **Other:** _____

***Note:** (1) Benefit claims under 37 CFR 1.78 and foreign priority claims under 1.55 **must** be included in an Application Data Sheet (ADS).
(2) For applications filed under 35 U.S.C. 111, the application must contain an ADS specifying the applicant if the applicant is an assignee, person to whom the inventor is under an obligation to assign, or person who otherwise shows sufficient proprietary interest in the matter. See 37 CFR 1.46(b).

19. CORRESPONDENCE ADDRESS

[✓] The address associated with Customer Number: 26285 **OR** [ ] Correspondence address below

Name					
Address					
City		State		Zip Code	
Country		Telephone		Email	

Signature	/Mark G. Knedeisen/	Date	April 5, 2019
Name (Print/Type)	Mark G. Knedeisen	Registration No. (Attorney/Agent)	42,747

This collection of information is required by 37 CFR 1.53(b). The information is required to obtain or retain a benefit by the public which is to file (and by the USPTO to process) an application. Confidentiality is governed by 35 U.S.C. 122 and 37 CFR 1.11 and 1.14. This collection is estimated to take 12 minutes to complete, including gathering, preparing, and submitting the completed application form to the USPTO. Time will vary depending upon the individual case. Any comments on the amount of time you require to complete this form and/or suggestions for reducing this burden, should be sent to the Chief Information Officer, U.S. Patent and Trademark Office, U.S. Department of Commerce, P.O. Box 1450, Alexandria, VA 22313-1450. DO NOT SEND FEES OR COMPLETED FORMS TO THIS ADDRESS. **SEND TO: Commissioner for Patents, P.O. Box 1450, Alexandria, VA 22313-1450.**

If you need assistance in completing the form, call 1-800-PTO-9199 and select option 2.

PTO/SB/17 (01-18)
Approved for use through 11/30/2020. OMB 0651-0032
U.S. Patent and Trademark Office; U.S. DEPARTMENT OF COMMERCE
Under the Paperwork Reduction Act of 1995 no persons are required to respond to a collection of information unless it displays a valid OMB control number

FEE TRANSMITTAL

Complete if known	
Application Number	
Filing Date	
First Named Inventor	Michael J. Koss
Examiner Name	
Art Unit	
Practitioner Docket No.	080188PCTUSCON10

☒ Applicant asserts small entity status. See 37 CFR 1.27.

☐ Applicant certifies micro entity status. See 37 CFR 1.29. Form PTO/SB/15A or B or equivalent must either be enclosed or have been submitted previously.

TOTAL AMOUNT OF PAYMENT ($) 785.00

METHOD OF PAYMENT (check all that apply)

☐ Check ☐ Credit Card ☐ Money Order ☐ None ☐ Other (please identify): _____

☒ Deposit Account Deposit Account Number: 02-1818 Deposit Account Name: K&L Gates LLP

For the above-identified deposit account, the Director is hereby authorized to (check all that apply):

☒ Charge fee(s) indicated below ☐ Charge fee(s) indicated below, **except for the filing fee**

☒ Charge any additional fee(s) or underpayment of fee(s) under 37 CFR 1.16 and 1.17 ☒ Credit any overpayment of fee(s)

WARNING: Information on this form may become public. Credit card information should not be included on this form. Provide credit card information and authorization on PTO-2038.

FEE CALCULATION

1. BASIC FILING, SEARCH, AND EXAMINATION FEES (U = undiscounted fee; S = small entity fee; M = micro entity fee)

	FILING FEES			SEARCH FEES			EXAMINATION FEES			
Application Type	U ($)	S ($)	M ($)	U ($)	S ($)	M ($)	U ($)	S ($)	M ($)	Fees Paid ($)
Utility	300	150*	75	660	330	165	760	380	190	$785.00
Design	200	100	50	160	80	40	600	300	150	
Plant	200	100	50	420	210	105	620	310	155	
Reissue	300	150	75	660	330	165	2,200	1,100	550	
Provisional	280	140	70	0	0	0	0	0	0	

* The $150 small entity status filing fee for a utility application is further reduced to $75 for a small entity status applicant who files the application via EFS-Web.

2. EXCESS CLAIM FEES

Fee Description	Undiscounted Fee ($)	Small Entity Fee ($)	Micro Entity Fee ($)
Each claim over 20 (including Reissues)	100	50	25
Each independent claim over 3 (including Reissues)	460	230	115
Multiple dependent claims	820	410	205

Total Claims		Extra Claims		Fee ($)		Fee Paid ($)
1	-20 or HP =	0	x	-0-	=	-0-

HP = highest number of total claims paid for, if greater than 20.

Indep. Claims		Extra Claims		Fee ($)		Fee Paid ($)
1	-3 or HP =	0	x	-0-	=	-0-

HP = highest number of independent claims paid for, if greater than 3.

Multiple Dependent Claims	
Fee ($)	Fee Paid ($)

3. APPLICATION SIZE FEE

If the specification and drawings exceed 100 sheets of paper (excluding electronically filed sequence or computer listings under 37 CFR 1.52(e)), the application size fee due is $400 ($200 for small entity) ($100 for micro entity) for each additional 50 sheets or fraction thereof. See 35 U.S.C. 41(a)(1)(G) and 37 CFR 1.16(s).

Total Sheets		Extra Sheets		Number of each additional 50 or fraction thereof		Fee ($)		Fee Paid ($)
_____	- 100 =	_____	/ 50 =	_____ (round **up** to a whole number)	x	_____	=	_____

4. OTHER FEE(S) **Fees Paid ($)**

Non-English specification, $130 fee (no small or micro entity discount) _____

Non-electronic filing fee under 37 CFR 1.16(t) for a utility application, $400 fee ($200 small or micro entity) _____

Other (e.g., late filing surcharge): _____ _____

SUBMITTED BY

Signature	/Mark G. Knedeisen/	Registration No. (Attorney/Agent) 42,747	Telephone 412-355-6342
Name (Print/Type)	Mark G. Knedeisen		Date April 5, 2019

This collection of information is required by 37 CFR 1.136. The information is required to obtain or retain a benefit by the public which is to file (and by the USPTO to process) an application. Confidentiality is governed by 35 U.S.C. 122 and 37 CFR 1.14. This collection is estimated to take 30 minutes to complete, including gathering, preparing, and submitting the completed application form to the USPTO. Time will vary depending upon the individual case. Any comments on the amount of time you require to complete this form and/or suggestions for reducing this burden, should be sent to the Chief Information Officer, U.S. Patent and Trademark Office, U.S. Department of Commerce, P.O. Box 1450, Alexandria, VA 22313-1450. DO NOT SEND FEES OR COMPLETED FORMS TO THIS ADDRESS. **SEND TO: Commissioner for Patents, P.O. Box 1450, Alexandria, VA 22313-1450.**

If you need assistance in completing the form, call 1-800-PTO-9199 and select option 2.

COPY

PTO/AIA/01 (06-12)
Approved for use through 01/31/2014. OMB 0651-0032
U.S. Patent and Trademark Office; U.S. DEPARTMENT OF COMMERCE
Under the Paperwork Reduction Act of 1995, no persons are required to respond to a collection of information unless it displays a valid OMB control number.

DECLARATION (37 CFR 1.63) FOR UTILITY OR DESIGN APPLICATION USING AN APPLICATION DATA SHEET (37 CFR 1.76)

Title of Invention	WIRELESS EARPHONE SET

As the below named inventor, I hereby declare that:

This declaration is directed to:

- [■] The attached application, or
- [ ] United States application or PCT international application number _____
  filed on _____

The above-identified application was made or authorized to be made by me.

I believe that I am the original inventor or an original joint inventor of a claimed invention in the application.

I hereby acknowledge that any willful false statement made in this declaration is punishable under 18 U.S.C. 1001 by fine or imprisonment of not more than five (5) years, or both.

WARNING:

Petitioner/applicant is cautioned to avoid submitting personal information in documents filed in a patent application that may contribute to identity theft. Personal information such as social security numbers, bank account numbers, or credit card numbers (other than a check or credit card authorization form PTO-2038 submitted for payment purposes) is never required by the USPTO to support a petition or an application. If this type of personal information is included in documents submitted to the USPTO, petitioners/applicants should consider redacting such personal information from the documents before submitting them to the USPTO. Petitioner/applicant is advised that the record of a patent application is available to the public after publication of the application (unless a non-publication request in compliance with 37 CFR 1.213(a) is made in the application) or issuance of a patent. Furthermore, the record from an abandoned application may also be available to the public if the application is referenced in a published application or an issued patent (see 37 CFR 1.14). Checks and credit card authorization forms PTO-2038 submitted for payment purposes are not retained in the application file and therefore are not publicly available.

LEGAL NAME OF INVENTOR

Inventor: Michael J. Pelland Date (Optional): 9/18/13

Signature: _____

Note: An application data sheet (PTO/SB/14 or equivalent), including naming the entire inventive entity, must accompany this form or must have been previously filed. Use an additional PTO/AIA/01 form for each additional inventor.

This collection of information is required by 35 U.S.C. 115 and 37 CFR 1.63. The information is required to obtain or retain a benefit by the public which is to file (and by the USPTO to process) an application. Confidentiality is governed by 35 U.S.C. 122 and 37 CFR 1.11 and 1.14. This collection is estimated to take 1 minute to complete, including gathering, preparing, and submitting the completed application form to the USPTO. Time will vary depending upon the individual case. Any comments on the amount of time you require to complete this form and/or suggestions for reducing this burden, should be sent to the Chief Information Officer, U.S. Patent and Trademark Office, U.S. Department of Commerce, P.O. Box 1450, Alexandria, VA 22313-1450. DO NOT SEND FEES OR COMPLETED FORMS TO THIS ADDRESS. **SEND TO: Commissioner for Patents, P.O. Box 1450, Alexandria, VA 22313-1450.**

If you need assistance in completing the form, call 1-800-PTO-9199 and select option 2.

COPY

PTO/AIA/01 (06-12)
Approved for use through 01/31/2014. OMB 0651-0032
U.S. Patent and Trademark Office; U.S. DEPARTMENT OF COMMERCE
Under the Paperwork Reduction Act of 1995, no persons are required to respond to a collection of information unless it displays a valid OMB control number.

DECLARATION (37 CFR 1.63) FOR UTILITY OR DESIGN APPLICATION USING AN APPLICATION DATA SHEET (37 CFR 1.76)

Title of Invention	WIRELESS EARPHONE SET

As the below named inventor, I hereby declare that:

This declaration is directed to:

- [x] The attached application, or
- [ ] United States application or PCT international application number _____

filed on _____.

The above-identified application was made or authorized to be made by me.

I believe that I am the original inventor or an original joint inventor of a claimed invention in the application.

I hereby acknowledge that any willful false statement made in this declaration is punishable under 18 U.S.C. 1001 by fine or imprisonment of not more than five (5) years, or both.

WARNING:

Petitioner/applicant is cautioned to avoid submitting personal information in documents filed in a patent application that may contribute to identity theft. Personal information such as social security numbers, bank account numbers, or credit card numbers (other than a check or credit card authorization form PTO-2038 submitted for payment purposes) is never required by the USPTO to support a petition or an application. If this type of personal information is included in documents submitted to the USPTO, petitioners/applicants should consider redacting such personal information from the documents before submitting them to the USPTO. Petitioner/applicant is advised that the record of a patent application is available to the public after publication of the application (unless a non-publication request in compliance with 37 CFR 1.213(a) is made in the application) or issuance of a patent. Furthermore, the record from an abandoned application may also be available to the public if the application is referenced in a published application or an issued patent (see 37 CFR 1.14). Checks and credit card authorization forms PTO-2038 submitted for payment purposes are not retained in the application file and therefore are not publicly available.

LEGAL NAME OF INVENTOR

Inventor: Michael J. Koss Date (Optional): 9.9.13

Signature: Michael J. Koss

Note: An application data sheet (PTO/SB/14 or equivalent), including naming the entire inventive entity, must accompany this form or must have been previously filed. Use an additional PTO/AIA/01 form for each additional inventor.

This collection of information is required by 35 U.S.C. 115 and 37 CFR 1.63. The information is required to obtain or retain a benefit by the public which is to file (and by the USPTO to process) an application. Confidentiality is governed by 35 U.S.C. 122 and 37 CFR 1.11 and 1.14. This collection is estimated to take 1 minute to complete, including gathering, preparing, and submitting the completed application form to the USPTO. Time will vary depending upon the individual case. Any comments on the amount of time you require to complete this form and/or suggestions for reducing this burden, should be sent to the Chief Information Officer, U.S. Patent and Trademark Office, U.S. Department of Commerce, P.O. Box 1450, Alexandria, VA 22313-1450. DO NOT SEND FEES OR COMPLETED FORMS TO THIS ADDRESS. **SEND TO: Commissioner for Patents, P.O. Box 1450, Alexandria, VA 22313-1450.**

If you need assistance in completing the form, call 1-800-PTO-9199 and select option 2.

COPY

PTO/AIA/01 (06-12)
Approved for use through 11/30/2020. OMB 0651-0032
U.S. Patent and Trademark Office; U.S. DEPARTMENT OF COMMERCE
Under the Paperwork Reduction Act of 1995, no persons are required to respond to a collection of information unless it displays a valid OMB control number.

DECLARATION (37 CFR 1.63) FOR UTILITY OR DESIGN APPLICATION USING AN APPLICATION DATA SHEET (37 CFR 1.76)

Title of Invention	SYSTEM WITH WIRELESS EARPHONES

As the below named inventor, I hereby declare that:

This declaration is directed to:

☐ The attached application, or

☒ United States application or PCT international application number 15/962,305

filed on April 25, 2018.

The above-identified application was made or authorized to be made by me.

I believe that I am the original inventor or an original joint inventor of a claimed invention in the application.

I hereby acknowledge that any willful false statement made in this declaration is punishable under 18 U.S.C. 1001 by fine or imprisonment of not more than five (5) years, or both.

WARNING:

Petitioner/applicant is cautioned to avoid submitting personal information in documents filed in a patent application that may contribute to identity theft. Personal information such as social security numbers, bank account numbers, or credit card numbers (other than a check or credit card authorization form PTO-2038 submitted for payment purposes) is never required by the USPTO to support a petition or an application. If this type of personal information is included in documents submitted to the USPTO, petitioners/applicants should consider redacting such personal information from the documents before submitting them to the USPTO. Petitioner/applicant is advised that the record of a patent application is available to the public after publication of the application (unless a non-publication request in compliance with 37 CFR 1.213(a) is made in the application) or issuance of a patent. Furthermore, the record from an abandoned application may also be available to the public if the application is referenced in a published application or an issued patent (see 37 CFR 1.14). Checks and credit card authorization forms PTO-2038 submitted for payment purposes are not retained in the application file and therefore are not publicly available.

LEGAL NAME OF INVENTOR

Inventor: Morgan J. Lowery Date (Optional): _____

Signature: _____

Note: An application data sheet (PTO/SB/14 or equivalent), including naming the entire inventive entity, must accompany this form or must have been previously filed. Use an additional PTO/AIA/01 form for each additional inventor.

This collection of information is required by 35 U.S.C. 115 and 37 CFR 1.63. The information is required to obtain or retain a benefit by the public which is to file (and by the USPTO to process) an application. Confidentiality is governed by 35 U.S.C. 122 and 37 CFR 1.11 and 1.14. This collection is estimated to take 1 minute to complete, including gathering, preparing, and submitting the completed application form to the USPTO. Time will vary depending upon the individual case. Any comments on the amount of time you require to complete this form and/or suggestions for reducing this burden, should be sent to the Chief Information Officer, U.S. Patent and Trademark Office, U.S. Department of Commerce, P.O. Box 1450, Alexandria, VA 22313-1450. DO NOT SEND FEES OR COMPLETED FORMS TO THIS ADDRESS. **SEND TO: Commissioner for Patents, P.O. Box 1450, Alexandria, VA 22313-1450.**

If you need assistance in completing the form, call 1-800-PTO-9199 and select option 2.

COPY

PTO/AIA/01 (06-12)
Approved for use through 11/30/2020. OMB 0651-0032
U.S. Patent and Trademark Office; U.S. DEPARTMENT OF COMMERCE
Under the Paperwork Reduction Act of 1995, no persons are required to respond to a collection of information unless it displays a valid OMB control number.

DECLARATION (37 CFR 1.63) FOR UTILITY OR DESIGN APPLICATION USING AN APPLICATION DATA SHEET (37 CFR 1.76)

Title of Invention	SYSTEM WITH WIRELESS EARPHONES

As the below named inventor, I hereby declare that:

This declaration is directed to:

☐ The attached application, or

☒ United States application or PCT international application number 15/962,305

filed on April 25, 2018.

The above-identified application was made or authorized to be made by me.

I believe that I am the original inventor or an original joint inventor of a claimed invention in the application.

I hereby acknowledge that any willful false statement made in this declaration is punishable under 18 U.S.C. 1001 by fine or imprisonment of not more than five (5) years, or both.

WARNING:

Petitioner/applicant is cautioned to avoid submitting personal information in documents filed in a patent application that may contribute to identity theft. Personal information such as social security numbers, bank account numbers, or credit card numbers (other than a check or credit card authorization form PTO-2038 submitted for payment purposes) is never required by the USPTO to support a petition or an application. If this type of personal information is included in documents submitted to the USPTO, petitioners/applicants should consider redacting such personal information from the documents before submitting them to the USPTO. Petitioner/applicant is advised that the record of a patent application is available to the public after publication of the application (unless a non-publication request in compliance with 37 CFR 1.213(a) is made in the application) or issuance of a patent. Furthermore, the record from an abandoned application may also be available to the public if the application is referenced in a published application or an issued patent (see 37 CFR 1.14). Checks and credit card authorization forms PTO-2038 submitted for payment purposes are not retained in the application file and therefore are not publicly available.

LEGAL NAME OF INVENTOR

Inventor: Steven R. Reckamp Date (Optional): _____

Signature: _____

Note: An application data sheet (PTO/SB/14 or equivalent), including naming the entire inventive entity, must accompany this form or must have been previously filed. Use an additional PTO/AIA/01 form for each additional inventor.

This collection of information is required by 35 U.S.C. 115 and 37 CFR 1.63. The information is required to obtain or retain a benefit by the public which is to file (and by the USPTO to process) an application. Confidentiality is governed by 35 U.S.C. 122 and 37 CFR 1.11 and 1.14. This collection is estimated to take 1 minute to complete, including gathering, preparing, and submitting the completed application form to the USPTO. Time will vary depending upon the individual case. Any comments on the amount of time you require to complete this form and/or suggestions for reducing this burden, should be sent to the Chief Information Officer, U.S. Patent and Trademark Office, U.S. Department of Commerce, P.O. Box 1450, Alexandria, VA 22313-1450. DO NOT SEND FEES OR COMPLETED FORMS TO THIS ADDRESS. **SEND TO: Commissioner for Patents, P.O. Box 1450, Alexandria, VA 22313-1450.**

If you need assistance in completing the form, call 1-800-PTO-9199 and select option 3.

COPY

PTO/AIA/01 (06-12)
Approved for use through 11/30/2020. OMB 0651-0032
U.S. Patent and Trademark Office; U.S. DEPARTMENT OF COMMERCE
Under the Paperwork Reduction Act of 1995, no persons are required to respond to a collection of information unless it displays a valid OMB control number.

DECLARATION (37 CFR 1.63) FOR UTILITY OR DESIGN APPLICATION USING AN APPLICATION DATA SHEET (37 CFR 1.76)

Title of Invention	SYSTEM WITH WIRELESS EARPHONES

As the below named inventor, I hereby declare that:

This declaration is directed to:

☐ The attached application, or

☒ United States application or PCT international application number 15/962,305 filed on April 25, 2018.

The above-identified application was made or authorized to be made by me.

I believe that I am the original inventor or an original joint inventor of a claimed invention in the application.

I hereby acknowledge that any willful false statement made in this declaration is punishable under 18 U.S.C. 1001 by fine or imprisonment of not more than five (5) years, or both.

WARNING:

Petitioner/applicant is cautioned to avoid submitting personal information in documents filed in a patent application that may contribute to identity theft. Personal information such as social security numbers, bank account numbers, or credit card numbers (other than a check or credit card authorization form PTO-2038 submitted for payment purposes) is never required by the USPTO to support a petition or an application. If this type of personal information is included in documents submitted to the USPTO, petitioners/applicants should consider redacting such personal information from the documents before submitting them to the USPTO. Petitioner/applicant is advised that the record of a patent application is available to the public after publication of the application (unless a non-publication request in compliance with 37 CFR 1.213(a) is made in the application) or issuance of a patent. Furthermore, the record from an abandoned application may also be available to the public if the application is referenced in a published application or an issued patent (see 37 CFR 1.14). Checks and credit card authorization forms PTO-2038 submitted for payment purposes are not retained in the application file and therefore are not publicly available.

LEGAL NAME OF INVENTOR

Inventor: Gregory J. Hallingstad Date (Optional): 6/18/18

Signature: Gregory J Hallingstad

Note: An application data sheet (PTO/SB/14 or equivalent), including naming the entire inventive entity, must accompany this form or must have been previously filed. Use an additional PTO/AIA/01 form for each additional inventor.

This collection of information is required by 35 U.S.C. 115 and 37 CFR 1.63. The information is required to obtain or retain a benefit by the public which is to file (and by the USPTO to process) an application. Confidentiality is governed by 35 U.S.C. 122 and 37 CFR 1.11 and 1.14. This collection is estimated to take 1 minute to complete, including gathering, preparing, and submitting the completed application form to the USPTO. Time will vary depending upon the individual case. Any comments on the amount of time you require to complete this form and/or suggestions for reducing this burden, should be sent to the Chief Information Officer, U.S. Patent and Trademark Office, U.S. Department of Commerce, P.O. Box 1450, Alexandria, VA 22313-1450. DO NOT SEND FEES OR COMPLETED FORMS TO THIS ADDRESS. **SEND TO: Commissioner for Patents, P.O. Box 1450, Alexandria, VA 22313-1450.**

If you need assistance in completing the form, call 1-800-PTO-9199 and select option 2.

COPY

Doc code: Oath
Document Description: Oath or declaration filed

PTO/AIA/82 (07-13)
Approved for use through 11/30/2020. OMB 0651-0032
U.S. Patent and Trademark Office; U.S. DEPARTMENT OF COMMERCE
Under the Paperwork Reduction Act of 1995, no persons are required to respond to a collection of information unless it displays a valid OMB control number.

SUBSTITUTE STATEMENT IN LIEU OF AN OATH OR DECLARATION FOR UTILITY OR DESIGN PATENT APPLICATION (35 U.S.C. 115(d) AND 37 CFR 1.64)

Title of Invention	SYSTEM WITH WIRELESS EARPHONES

This statement is directed to:

☐ The attached application,

OR

☒ United States application or PCT international application number 15/962,305 filed on April 25, 2018

LEGAL NAME of inventor to whom this substitute statement applies:

(*E.g.*, Given Name (first and middle (if any)) and Family Name or Surname)

Jeffery K. Bovee

Residence (except for a deceased or legally incapacitated inventor):

City	State	Country
Sterling	IL	US

Mailing Address (except for a deceased or legally incapacitated inventor):

3706 E 20th St.

City	State	Zip	Country
Sterling	IL	61081	US

I believe the above-named inventor or joint inventor to be the original inventor or an original joint inventor of a claimed invention in the application.

The above-identified application was made or authorized to be made by me.

I hereby acknowledge that any willful false statement made in this statement is punishable under 18 U.S.C. 1001 by fine or imprisonment of not more than five (5) years, or both.

Relationship to the inventor to whom this substitute statement applies:

☐ Legal Representative (for deceased or legally incapacitated inventor only).
☒ Assignee.
☐ Person to whom the inventor is under an obligation to assign.
☐ Person who otherwise shows a sufficient proprietary interest in the matter (petition under 37 CFR 1.46 is required), or
☐ Joint Inventor.

This collection of information is required by 35 U.S.C. 115 and 37 CFR 1.63. The information is required to obtain or retain a benefit by the public which is to file (and by the USPTO to process) an application. Confidentiality is governed by 35 U.S.C. 122 and 37 CFR 1.11 and 1.14. This collection is estimated to take 1 minute to complete, including gathering, preparing, and submitting the completed application form to the USPTO. Time will vary depending upon the individual case. Any comments on the amount of time you require to complete this form and/or suggestions for reducing this burden, should be sent to the Chief Information Officer, U.S. Patent and Trademark Office, U.S. Department of Commerce, P.O. Box 1450, Alexandria, VA 22313-1450. DO NOT SEND FEES OR COMPLETED FORMS TO THIS ADDRESS. **SEND TO: Commissioner for Patents, P.O. Box 1450, Alexandria, VA 22313-1450.**

If you need assistance in completing the form, call 1-800-PTO-9199 and select option 2.

COPY

PTO/SB/AIA/02 (07-13)
Approved for use through 11/30/2020. OMB 0651-0033
U.S. Patent and Trademark Office; U.S. DEPARTMENT OF COMMERCE
Under the Paperwork Reduction Act of 1995, no persons are required to respond to a collection of information unless it displays a valid OMB control number.

SUBSTITUTE STATEMENT

Circumstances permitting execution of this substitute statement:

- ☐ Inventor is deceased.
- ☐ Inventor is under legal incapacity.
- ☒ Inventor cannot be found or reached after diligent effort, or
- ☐ Inventor has refused to execute the oath or declaration under 37 CFR 1.63.

If there are joint inventors, please check the appropriate box below:

- ☒ An application data sheet under 37 CFR 1.76 (PTO/AIA/14 or equivalent) naming the entire inventive entity has been or is currently submitted.

OR

- ☐ An application data sheet under 37 CFR 1.76 (PTO/AIA/14 or equivalent) has not been submitted. Thus, a Substitute Statement Supplemental Sheet (PTO/AIA/11 or equivalent) naming the entire inventive entity and providing inventor information is attached. See 37 CFR 1.64(b)

WARNING:

Petitioner/applicant is cautioned to avoid submitting personal information in documents filed in a patent application that may contribute to identity theft. Personal information such as social security numbers, bank account numbers, or credit card numbers (other than a check or credit card authorization form PTO-2038 submitted for payment purposes) is never required by the USPTO to support a petition or an application. If this type of personal information is included in documents submitted to the USPTO, petitioners/applicants should consider redacting such personal information from the documents before submitting them to the USPTO. Petitioner/applicant is advised that the record of a patent application is available to the public after publication of the application (unless a non-publication request in compliance with 37 CFR 1.213(a) is made in the application) or issuance of a patent. Furthermore, the record from an abandoned application may also be available to the public if the application is referenced in a published application or an issued patent (see 37 CFR 1.14). Checks and credit card authorization forms PTO-2038 submitted for payment purposes are not retained in the application file and therefore are not publicly available.

PERSON EXECUTING THIS SUBSTITUTE STATEMENT:

Name: Michael J. Koss | Date (Optional):

Signature:

APPLICANT NAME AND TITLE OF PERSON EXECUTING THIS SUBSTITUTE STATEMENT:

If the applicant is a juristic entity, list the applicant name and the title of the signer:

Applicant Name: Koss Corporation

Title of Person Executing This Substitute Statement: President / Chief Executive Officer

The signer, whose title is supplied above, is authorized to act on behalf of the applicant.

Residence of the signer (unless provided in an application data sheet, PTO/AIA/14 or equivalent):

City: Milwaukee | State: WI | Country: US

Mailing Address of the signer (unless provided in an application data sheet, PTO/AIA/14 or equivalent)

4129 N. Port Washington Road

City: Milwaukee | State: WI | Zip: 53212-1052 | Country: US

Note: Use an additional PTO/AIA/02 form for each inventor who is deceased, legally incapacitated, cannot be found or reached after diligent effort, or has refused to execute the oath or declaration under 37 CFR 1.63.

COPY

Doc code: Oath
Document Description: Oath or declaration filed

PTO/AIA/02 (07-13)
Approved for use through 11/30/2020. OMB 0651-0032
U.S. Patent and Trademark Office; U.S. DEPARTMENT OF COMMERCE
Under the Paperwork Reduction Act of 1995, no persons are required to respond to a collection of information unless it displays a valid OMB control number

SUBSTITUTE STATEMENT IN LIEU OF AN OATH OR DECLARATION FOR UTILITY OR DESIGN PATENT APPLICATION (35 U.S.C. 115(d) AND 37 CFR 1.64)

Title of Invention	SYSTEM WITH WIRELESS EARPHONES

This statement is directed to:

☐ The attached application,

OR

☒ United States application or PCT international application number 15/962,305 filed on April 25, 2018

LEGAL NAME of inventor to whom this substitute statement applies:

(*E.g.*, Given Name (first and middle (if any)) and Family Name or Surname)

Michael Sagan

Residence (except for a deceased or legally incapacitated inventor):

City	State	Country
Fairfield	CA	US

Mailing Address (except for a deceased or legally incapacitated inventor):

117 Pau Ct

City	State	Zip	Country
Fairfield	CA	94534	US

I believe the above-named inventor or joint inventor to be the original inventor or an original joint inventor of a claimed invention in the application.

The above-identified application was made or authorized to be made by me.

I hereby acknowledge that any willful false statement made in this statement is punishable under 18 U.S.C. 1001 by fine or imprisonment of not more than five (5) years, or both.

Relationship to the inventor to whom this substitute statement applies:

☐ Legal Representative (for deceased or legally incapacitated inventor only),

☒ Assignee,

☐ Person to whom the inventor is under an obligation to assign,

☐ Person who otherwise shows a sufficient proprietary interest in the matter (petition under 37 CFR 1.46 is required), or

☐ Joint Inventor.

This collection of information is required by 35 U.S.C. 115 and 37 CFR 1.63. The information is required to obtain or retain a benefit by the public which is to file (and by the USPTO to process) an application. Confidentiality is governed by 35 U.S.C. 122 and 37 CFR 1.11 and 1.14. This collection is estimated to take 1 minute to complete, including gathering, preparing, and submitting the completed application form to the USPTO. Time will vary depending upon the individual case. Any comments on the amount of time you require to complete this form and/or suggestions for reducing this burden, should be sent to the Chief Information Officer, U.S. Patent and Trademark Office, U.S. Department of Commerce, P.O. Box 1450, Alexandria, VA 22313-1450. DO NOT SEND FEES OR COMPLETED FORMS TO THIS ADDRESS. **SEND TO: Commissioner for Patents, P.O. Box 1450, Alexandria, VA 22313-1450.**

If you need assistance in completing the form, call 1-800-PTO-9199 and select option 2.

COPY

PTO/SB/AIA/02 (07-13)
Approved for use through 11/30/2020. OMB 0651-0032
U.S. Patent and Trademark Office; U.S. DEPARTMENT OF COMMERCE
Under the Paperwork Reduction Act of 1995, no persons are required to respond to a collection of information unless it displays a valid OMB control number.

SUBSTITUTE STATEMENT

Circumstances permitting execution of this substitute statement:

- ☐ Inventor is deceased.
- ☐ Inventor is under legal incapacity.
- ☒ Inventor cannot be found or reached after diligent effort, or
- ☐ Inventor has refused to execute the oath or declaration under 37 CFR 1.63.

If there are joint inventors, please check the appropriate box below:

- ☒ An application data sheet under 37 CFR 1.76 (PTO/AIA/14 or equivalent) naming the entire inventive entity has been or is currently submitted.

OR

- ☐ An application data sheet under 37 CFR 1.76 (PTO/AIA/14 or equivalent) has not been submitted. Thus, a Substitute Statement Supplemental Sheet (PTO/AIA/11 or equivalent) naming the entire inventive entity and providing inventor information is attached. See 37 CFR 1.64(b).

WARNING:

Petitioner/applicant is cautioned to avoid submitting personal information in documents filed in a patent application that may contribute to identity theft. Personal information such as social security numbers, bank account numbers, or credit card numbers (other than a check or credit card authorization form PTO-2038 submitted for payment purposes) is never required by the USPTO to support a petition or an application. If this type of personal information is included in documents submitted to the USPTO, petitioners/applicants should consider redacting such personal information from the documents before submitting them to the USPTO. Petitioner/applicant is advised that the record of a patent application is available to the public after publication of the application (unless a non-publication request in compliance with 37 CFR 1.213(a) is made in the application) or issuance of a patent. Furthermore, the record from an abandoned application may also be available to the public if the application is referenced in a published application or an issued patent (see 37 CFR 1.14). Checks and credit card authorization forms PTO-2038 submitted for payment purposes are not retained in the application file and therefore are not publicly available.

PERSON EXECUTING THIS SUBSTITUTE STATEMENT:

Name: Michael J. Koss | Date (Optional):

Signature:

APPLICANT NAME AND TITLE OF PERSON EXECUTING THIS SUBSTITUTE STATEMENT:

If the applicant is a junstic entity, list the applicant name and the title of the signer:

Applicant Name: Koss Corporation

Title of Person Executing This Substitute Statement: President / Chief Executive Officer

The signer, whose title is supplied above, is authorized to act on behalf of the applicant.

Residence of the signer (unless provided in an application data sheet, PTO/AIA/14 or equivalent):

City: Milwaukee | State: WI | Country: US

Mailing Address of the signer (unless provided in an application data sheet, PTO/AIA/14 or equivalent)

4129 N. Port Washington Road

City: Milwaukee | State: WI | Zip: 53212-1052 | Country: US

Note: Use an additional PTO/AIA/02 form for each inventor who is deceased, legally incapacitated, cannot be found or reached after diligent effort, or has refused to execute the oath or declaration under 37 CFR 1.63.

PTO/AIA/14 (02-18)
Approved for use through 11/30/2020. OMB 0651-0032
U.S. Patent and Trademark Office; U.S. DEPARTMENT OF COMMERCE
Under the Paperwork Reduction Act of 1995, no persons are required to respond to a collection of information unless it contains a valid OMB control number.

Application Data Sheet 37 CFR 1.76	Attorney Docket Number	080188PCTUSCON10
	Application Number	
Title of Invention	SYSTEM WITH WIRELESS EARPHONES	

The application data sheet is part of the provisional or nonprovisional application for which it is being submitted. The following form contains the bibliographic data arranged in a format specified by the United States Patent and Trademark Office as outlined in 37 CFR 1.76.
This document may be completed electronically and submitted to the Office in electronic format using the Electronic Filing System (EFS) or the document may be printed and included in a paper filed application.

Secrecy Order 37 CFR 5.2:

☐ Portions or all of the application associated with this Application Data Sheet may fall under a Secrecy Order pursuant to 37 CFR 5.2 (Paper filers only. Applications that fall under Secrecy Order may not be filed electronically.)

Inventor Information:

Inventor 1 Remove

Legal Name

Prefix	Given Name	Middle Name	Family Name	Suffix
	Michael	J.	Koss	

Residence Information (Select One) ● US Residency Non US Residency Active US Military Service

City	Milwaukee	State/Province	WI	Country of Residence	US

Mailing Address of Inventor:

Address 1	4129 N. Port Washington Road		
Address 2			
City	Milwaukee	State/Province	WI
Postal Code	53212-1052	Country	US

Inventor 2 Remove

Legal Name

Prefix	Given Name	Middle Name	Family Name	Suffix
	Michael	J.	Pelland	

Residence Information (Select One) ◉ US Residency Non US Residency Active US Military Service

City	Princeton	State/Province	WI	Country of Residence	US

Mailing Address of Inventor:

Address 1	N4626 Wildwood Lane		
Address 2			
City	Princeton	State/Province	WI
Postal Code	54968	Country	US

Inventor 3 Remove

Legal Name

Prefix	Given Name	Middle Name	Family Name	Suffix
	Michael		Sagan	

Residence Information (Select One) ◉ US Residency Non US Residency Active US Military Service

PTO/AIA/14 (02-18)
Approved for use through 11/30/2020. OMB 0651-0032
U.S. Patent and Trademark Office; U.S. DEPARTMENT OF COMMERCE
Under the Paperwork Reduction Act of 1995, no persons are required to respond to a collection of information unless it contains a valid OMB control number.

Application Data Sheet 37 CFR 1.76	Attorney Docket Number	080188PCTUSCON10
	Application Number	
Title of Invention	SYSTEM WITH WIRELESS EARPHONES	

City	Fairfield	State/Province	CA	Country of Residence	US

Mailing Address of Inventor:

Address 1	117 Pau Ct		
Address 2			
City	Fairfield	State/Province	CA
Postal Code	94534	Country	US

Inventor 4 Remove

Legal Name

Prefix	Given Name	Middle Name	Family Name	Suffix
	Steven	R.	Reckamp	

Residence Information (Select One) ◉ US Residency ○ Non US Residency ○ Active US Military Service

City	Crystal Lake	State/Province	IL	Country of Residence	US

Mailing Address of Inventor:

Address 1	5608 Smith Rd.		
Address 2			
City	Crystal Lake	State/Province	IL
Postal Code	60014	Country	US

Inventor 5 Remove

Legal Name

Prefix	Given Name	Middle Name	Family Name	Suffix
	Gregory	J.	Hallingstad	

Residence Information (Select One) ◉ US Residency ○ Non US Residency ○ Active US Military Service

City	Deforest	State/Province	WI	Country of Residence	US

Mailing Address of Inventor:

Address 1	6871 Old Amsterdam Way		
Address 2			
City	Deforest	State/Province	WI
Postal Code	53532	Country	US

Inventor 6 Remove

Legal Name

Prefix	Given Name	Middle Name	Family Name	Suffix
	Jeffery	K.	Bovee	

Residence Information (Select One) ◉ US Residency ○ Non US Residency ○ Active US Military Service

City	Sterling	State/Province	IL	Country of Residence	US

PTO/AIA/14 (02-18)
Approved for use through 11/30/2020. OMB 0651-0032
U.S. Patent and Trademark Office; U.S. DEPARTMENT OF COMMERCE
Under the Paperwork Reduction Act of 1995, no persons are required to respond to a collection of information unless it contains a valid OMB control number.

Application Data Sheet 37 CFR 1.76	Attorney Docket Number	080188PCTUSCON10
	Application Number	
Title of Invention	SYSTEM WITH WIRELESS EARPHONES	

Mailing Address of Inventor:

Address 1	3706 E 20th St.		
Address 2			
City	Sterling	**State/Province**	IL
Postal Code	61081	**Country**	US

Inventor 7 Remove

Legal Name

Prefix	Given Name	Middle Name	Family Name	Suffix
	Morgan	J.	Lowery	

Residence Information (Select One) ◉ US Residency ○ Non US Residency ○ Active US Military Service

City	Deforest	**State/Province**	WI	**Country of Residence**	US

Mailing Address of Inventor:

Address 1	513 Yahara St.		
Address 2			
City	Deforest	**State/Province**	WI
Postal Code	53532	**Country**	US

All Inventors Must Be Listed - Additional Inventor Information blocks may be generated within this form by selecting the **Add** button. Add

Correspondence Information:

Enter either Customer Number or complete the Correspondence Information section below.
For further information see 37 CFR 1.33(a).

☐ **An Address is being provided for the correspondence Information of this application.**

Customer Number	26285		
Email Address		Add Email	Remove Email

Application Information:

Title of the Invention	SYSTEM WITH WIRELESS EARPHONES		
Attorney Docket Number	080188PCTUSCON10	**Small Entity Status Claimed**	☒
Application Type	Nonprovisional		
Subject Matter	Utility		
Total Number of Drawing Sheets (if any)	16	**Suggested Figure for Publication (if any)**	

PTO/AIA/14 (02-18)
Approved for use through 11/30/2020. OMB 0651-0032
U.S. Patent and Trademark Office; U.S. DEPARTMENT OF COMMERCE
Under the Paperwork Reduction Act of 1995, no persons are required to respond to a collection of information unless it contains a valid OMB control number.

Application Data Sheet 37 CFR 1.76	Attorney Docket Number	080188PCTUSCON10
	Application Number	
Title of Invention	SYSTEM WITH WIRELESS EARPHONES	

Filing By Reference:

Only complete this section when filing an application by reference under 35 U.S.C. 111(c) and 37 CFR 1.57(a). Do not complete this section if application papers including a specification and any drawings are being filed. Any domestic benefit or foreign priority information must be provided in the appropriate section(s) below (i.e., "Domestic Benefit/National Stage Information" and "Foreign Priority Information").

For the purposes of a filing date under 37 CFR 1.53(b), the description and any drawings of the present application are replaced by this reference to the previously filed application, subject to conditions and requirements of 37 CFR 1.57(a).

Application number of the previously filed application	Filing date (YYYY-MM-DD)	Intellectual Property Authority or Country

Publication Information:

☐ Request Early Publication (Fee required at time of Request 37 CFR 1.219)

☐ **Request Not to Publish.** I hereby request that the attached application not be published under 35 U.S.C. 122(b) and certify that the invention disclosed in the attached application **has not and will not** be the subject of an application filed in another country, or under a multilateral international agreement, that requires publication at eighteen months after filing.

Representative Information:

Representative information should be provided for all practitioners having a power of attorney in the application. Providing this information in the Application Data Sheet does not constitute a power of attorney in the application (see 37 CFR 1.32).
Either enter Customer Number or complete the Representative Name section below. If both sections are completed the customer Number will be used for the Representative Information during processing.

Please Select One:	● Customer Number	US Patent Practitioner	○ Limited Recognition (37 CFR 11.9)
Customer Number	26285		

Domestic Benefit/National Stage Information:

This section allows for the applicant to either claim benefit under 35 U.S.C. 119(e), 120, 121, 365(c), or 386(c) or indicate National Stage entry from a PCT application. Providing benefit claim information in the Application Data Sheet constitutes the specific reference required by 35 U.S.C. 119(e) or 120, and 37 CFR 1.78.
When referring to the current application, please leave the "Application Number" field blank.

Prior Application Status	Pending		Remove
Application Number	Continuity Type	Prior Application Number	Filing or 371(c) Date (YYYY-MM-DD)
	Continuation of	16/182927	2018-11-07

PTO/AIA/14 (02-18)
Approved for use through 11/30/2020. OMB 0651-0032
U.S. Patent and Trademark Office; U.S. DEPARTMENT OF COMMERCE
Under the Paperwork Reduction Act of 1995, no persons are required to respond to a collection of information unless it contains a valid OMB control number.

Application Data Sheet 37 CFR 1.76	Attorney Docket Number	080188PCTUSCON10
	Application Number	
Title of Invention	SYSTEM WITH WIRELESS EARPHONES	

Prior Application Status	Patented				Remove
Application Number	Continuity Type	Prior Application Number	Filing Date (YYYY-MM-DD)	Patent Number	Issue Date (YYYY-MM-DD)
16/182927	Continuation of	15/962305	2018-04-25	10206025	2019-02-12
Prior Application Status	Patented				Remove
Application Number	Continuity Type	Prior Application Number	Filing Date (YYYY-MM-DD)	Patent Number	Issue Date (YYYY-MM-DD)
15/962305	Continuation of	15/650362	2017-07-14	9986325	2018-05-29
Prior Application Status	Patented				Remove
Application Number	Continuity Type	Prior Application Number	Filing Date (YYYY-MM-DD)	Patent Number	Issue Date (YYYY-MM-DD)
15/650362	Continuation of	15/293785	2016-10-14	9729959	2017-08-08
Prior Application Status	Patented				Remove
Application Number	Continuity Type	Prior Application Number	Filing Date (YYYY-MM-DD)	Patent Number	Issue Date (YYYY-MM-DD)
15/293785	Continuation of	15/082040	2016-03-28	9497535	2016-11-15
Prior Application Status	Patented				Remove
Application Number	Continuity Type	Prior Application Number	Filing Date (YYYY-MM-DD)	Patent Number	Issue Date (YYYY-MM-DD)
15/082040	Continuation of	14/695696	2015-04-24	9438987	2016-09-06
Prior Application Status	Patented				Remove
Application Number	Continuity Type	Prior Application Number	Filing Date (YYYY-MM-DD)	Patent Number	Issue Date (YYYY-MM-DD)
14/695696	Continuation of	13/609409	2012-09-11	9049502	2015-06-02
Prior Application Status	Patented				Remove
Application Number	Continuity Type	Prior Application Number	Filing Date (YYYY-MM-DD)	Patent Number	Issue Date (YYYY-MM-DD)
13/609409	Continuation of	13/459291	2012-04-30	8571544	2013-10-29
Prior Application Status	Patented				Remove
Application Number	Continuity Type	Prior Application Number	Filing Date (YYYY-MM-DD)	Patent Number	Issue Date (YYYY-MM-DD)
13/459291	Continuation of	12/936488	2010-12-20	8190203	2012-05-29
Prior Application Status	Expired				Remove
Application Number	Continuity Type	Prior Application Number	Filing or 371(c) Date (YYYY-MM-DD)		
12/936488	a 371 of international	PCT/US2009/039754	2009-04-07		
Prior Application Status	Expired				Remove
Application Number	Continuity Type	Prior Application Number	Filing or 371(c) Date (YYYY-MM-DD)		
PCT/US2009/039754	Claims benefit of provisional	61/123265	2008-04-07		

Application Data Sheet 37 CFR 1.76	Attorney Docket Number	080188PCTUSCON10
	Application Number	
Title of Invention	SYSTEM WITH WIRELESS EARPHONES	

Additional Domestic Benefit/National Stage Data may be generated within this form by selecting the **Add** button. Add

Foreign Priority Information:

This section allows for the applicant to claim priority to a foreign application. Providing this information in the application data sheet constitutes the claim for priority as required by 35 U.S.C. 119(b) and 37 CFR 1.55. When priority is claimed to a foreign application that is eligible for retrieval under the priority document exchange program (PDX)[i] the information will be used by the Office to automatically attempt retrieval pursuant to 37 CFR 1.55(i)(1) and (2). Under the PDX program, applicant bears the ultimate responsibility for ensuring that a copy of the foreign application is received by the Office from the participating foreign intellectual property office, or a certified copy of the foreign priority application is filed, within the time period specified in 37 CFR 1.55(g)(1).

Remove

Application Number	Country[i]	Filing Date (YYYY-MM-DD)	Access Code[i] (if applicable)

Additional Foreign Priority Data may be generated within this form by selecting the **Add** button. Add

Statement under 37 CFR 1.55 or 1.78 for AIA (First Inventor to File) Transition Applications

☐ This application (1) claims priority to or the benefit of an application filed before March 16, 2013 and (2) also contains, or contained at any time, a claim to a claimed invention that has an effective filing date on or after March 16, 2013.
NOTE: By providing this statement under 37 CFR 1.55 or 1.78, this application, with a filing date on or after March 16, 2013, will be examined under the first inventor to file provisions of the AIA.

PTO/AIA/14 (02-18)
Approved for use through 11/30/2020. OMB 0651-0032
U.S. Patent and Trademark Office; U.S. DEPARTMENT OF COMMERCE
Under the Paperwork Reduction Act of 1995, no persons are required to respond to a collection of information unless it contains a valid OMB control number.

Application Data Sheet 37 CFR 1.76	Attorney Docket Number	080188PCTUSCON10
	Application Number	
Title of Invention	SYSTEM WITH WIRELESS EARPHONES	

Authorization or Opt-Out of Authorization to Permit Access:

When this Application Data Sheet is properly signed and filed with the application, applicant has provided written authority to permit a participating foreign intellectual property (IP) office access to the instant application-as-filed (see paragraph A in subsection 1 below) and the European Patent Office (EPO) access to any search results from the instant application (see paragraph B in subsection 1 below).

Should applicant choose not to provide an authorization identified in subsection 1 below, applicant **must opt-out** of the authorization by checking the corresponding box A or B or both in subsection 2 below.

NOTE: This section of the Application Data Sheet is **ONLY** reviewed and processed with the **INITIAL** filing of an application. After the initial filing of an application, an Application Data Sheet cannot be used to provide or rescind authorization for access by a foreign IP office(s). Instead, Form PTO/SB/39 or PTO/SB/69 must be used as appropriate.

1. Authorization to Permit Access by a Foreign Intellectual Property Office(s)

A. Priority Document Exchange (PDX) - Unless box A in subsection 2 (opt-out of authorization) is checked, the undersigned hereby **grants the USPTO authority** to provide the European Patent Office (EPO), the Japan Patent Office (JPO), the Korean Intellectual Property Office (KIPO), the State Intellectual Property Office of the People's Republic of China (SIPO), the World Intellectual Property Organization (WIPO), and any other foreign intellectual property office participating with the USPTO in a bilateral or multilateral priority document exchange agreement in which a foreign application claiming priority to the instant patent application is filed, access to: (1) the instant patent application-as-filed and its related bibliographic data, (2) any foreign or domestic application to which priority or benefit is claimed by the instant application and its related bibliographic data, and (3) the date of filing of this Authorization. See 37 CFR 1.14(h)(1).

B. Search Results from U.S. Application to EPO - Unless box B in subsection 2 (opt-out of authorization) is checked, the undersigned hereby **grants the USPTO authority** to provide the EPO access to the bibliographic data and search results from the instant patent application when a European patent application claiming priority to the instant patent application is filed. See 37 CFR 1.14(h)(2).

The applicant is reminded that the EPO's Rule 141(1) EPC (European Patent Convention) requires applicants to submit a copy of search results from the instant application without delay in a European patent application that claims priority to the instant application.

2. Opt-Out of Authorizations to Permit Access by a Foreign Intellectual Property Office(s)

☐ A. Applicant **DOES NOT** authorize the USPTO to permit a participating foreign IP office access to the instant application-as-filed. If this box is checked, the USPTO will not be providing a participating foreign IP office with any documents and information identified in subsection 1A above.

☐ B. Applicant **DOES NOT** authorize the USPTO to transmit to the EPO any search results from the instant patent application. If this box is checked, the USPTO will not be providing the EPO with search results from the instant application.

NOTE: Once the application has published or is otherwise publicly available, the USPTO may provide access to the application in accordance with 37 CFR 1.14.

PTO/AIA/14 (02-18)
Approved for use through 11/30/2020. OMB 0651-0032
U.S. Patent and Trademark Office; U.S. DEPARTMENT OF COMMERCE
Under the Paperwork Reduction Act of 1995, no persons are required to respond to a collection of information unless it contains a valid OMB control number.

Application Data Sheet 37 CFR 1.76	Attorney Docket Number	080188PCTUSCON10
	Application Number	
Title of Invention	SYSTEM WITH WIRELESS EARPHONES	

Applicant Information:

Providing assignment information in this section does not substitute for compliance with any requirement of part 3 of Title 37 of CFR to have an assignment recorded by the Office.

Applicant 1 Remove

If the applicant is the inventor (or the remaining joint inventor or inventors under 37 CFR 1.45), this section should not be completed. The information to be provided in this section is the name and address of the legal representative who is the applicant under 37 CFR 1.43; or the name and address of the assignee, person to whom the inventor is under an obligation to assign the invention, or person who otherwise shows sufficient proprietary interest in the matter who is the applicant under 37 CFR 1.46. If the applicant is an applicant under 37 CFR 1.46 (assignee, person to whom the inventor is obligated to assign, or person who otherwise shows sufficient proprietary interest) together with one or more joint inventors, then the joint inventor or inventors who are also the applicant should be identified in this section.

Clear

● Assignee	Legal Representative under 35 U.S.C. 117	Joint Inventor
Person to whom the inventor is obligated to assign.	Person who shows sufficient proprietary interest	

If applicant is the legal representative, indicate the authority to file the patent application, the inventor is:

Name of the Deceased or Legally Incapacitated Inventor:

If the Applicant is an Organization check here. ☒

Organization Name	Koss Corporation		
Mailing Address Information For Applicant:			
Address 1	4129 N. Port Washington Road		
Address 2			
City	Milwaukee	**State/Province**	WI
Country	US	Postal Code	53212-1052
Phone Number		Fax Number	
Email Address			

Additional Applicant Data may be generated within this form by selecting the Add button. Add

Assignee Information including Non-Applicant Assignee Information:

Providing assignment information in this section does not substitute for compliance with any requirement of part 3 of Title 37 of CFR to have an assignment recorded by the Office.

PTO/AIA/14 (02-18)
Approved for use through 11/30/2020. OMB 0651-0032
U.S. Patent and Trademark Office; U.S. DEPARTMENT OF COMMERCE
Under the Paperwork Reduction Act of 1995, no persons are required to respond to a collection of information unless it contains a valid OMB control number.

Application Data Sheet 37 CFR 1.76	Attorney Docket Number	080188PCTUSCON10
	Application Number	
Title of Invention	SYSTEM WITH WIRELESS EARPHONES	

Assignee 1

Complete this section if assignee information, including non-applicant assignee information, is desired to be included on the patent application publication. An assignee-applicant identified in the "Applicant Information" section will appear on the patent application publication as an applicant. For an assignee-applicant, complete this section only if identification as an assignee is also desired on the patent application publication.

Remove

If the Assignee or Non-Applicant Assignee is an Organization check here. ☐

Prefix	**Given Name**	Middle Name	**Family Name**	Suffix

Mailing Address Information For Assignee including Non-Applicant Assignee:

Address 1			
Address 2			
City		**State/Province**	
Country i		Postal Code	
Phone Number		Fax Number	
Email Address			

Additional Assignee or Non-Applicant Assignee Data may be generated within this form by selecting the Add button. Add

Signature:

Remove

NOTE: This Application Data Sheet must be signed in accordance with 37 CFR 1.33(b). **However, if this Application Data Sheet is submitted with the INITIAL filing of the application and either box A or B is not checked in subsection 2 of the "Authorization or Opt-Out of Authorization to Permit Access" section, then this form must also be signed in accordance with 37 CFR 1.14(c).**

This Application Data Sheet **must** be signed by a patent practitioner if one or more of the applicants is a **juristic entity** (e.g., corporation or association). If the applicant is two or more joint inventors, this form must be signed by a patent practitioner, **all** joint inventors who are the applicant, or one or more joint inventor-applicants who have been given power of attorney (e.g., see USPTO Form PTO/AIA/81) on behalf of **all** joint inventor-applicants.

See 37 CFR 1.4(d) for the manner of making signatures and certifications.

Signature	/Mark G. Knedeisen/			Date (YYYY-MM-DD)	2019-04-05
First Name	Mark	Last Name	Knedeisen	Registration Number	42747

Additional Signature may be generated within this form by selecting the Add button. Add

PTO/AIA/14 (02-18)
Approved for use through 11/30/2020. OMB 0651-0032
U.S. Patent and Trademark Office; U.S. DEPARTMENT OF COMMERCE
Under the Paperwork Reduction Act of 1995, no persons are required to respond to a collection of information unless it contains a valid OMB control number.

Application Data Sheet 37 CFR 1.76	Attorney Docket Number	080188PCTUSCON10
	Application Number	
Title of Invention	SYSTEM WITH WIRELESS EARPHONES	

This collection of information is required by 37 CFR 1.76. The information is required to obtain or retain a benefit by the public which is to file (and by the USPTO to process) an application. Confidentiality is governed by 35 U.S.C. 122 and 37 CFR 1.14. This collection is estimated to take 23 minutes to complete, including gathering, preparing, and submitting the completed application data sheet form to the USPTO. Time will vary depending upon the individual case. Any comments on the amount of time you require to complete this form and/or suggestions for reducing this burden, should be sent to the Chief Information Officer, U.S. Patent and Trademark Office, U.S. Department of Commerce, P.O. Box 1450, Alexandria, VA 22313-1450. DO NOT SEND FEES OR COMPLETED FORMS TO THIS ADDRESS. **SEND TO: Commissioner for Patents, P.O. Box 1450, Alexandria, VA 22313-1450.**

Privacy Act Statement

The Privacy Act of 1974 (P.L. 93-579) requires that you be given certain information in connection with your submission of the attached form related to a patent application or patent. Accordingly, pursuant to the requirements of the Act, please be advised that: (1) the general authority for the collection of this information is 35 U.S.C. 2(b)(2); (2) furnishing of the information solicited is voluntary; and (3) the principal purpose for which the information is used by the U.S. Patent and Trademark Office is to process and/or examine your submission related to a patent application or patent. If you do not furnish the requested information, the U.S. Patent and Trademark Office may not be able to process and/or examine your submission, which may result in termination of proceedings or abandonment of the application or expiration of the patent.

The information provided by you in this form will be subject to the following routine uses:

1 The information on this form will be treated confidentially to the extent allowed under the Freedom of Information Act (5 U.S.C. 552) and the Privacy Act (5 U.S.C. 552a). Records from this system of records may be disclosed to the Department of Justice to determine whether the Freedom of Information Act requires disclosure of these records.

2. A record from this system of records may be disclosed, as a routine use, in the course of presenting evidence to a court, magistrate, or administrative tribunal, including disclosures to opposing counsel in the course of settlement negotiations.

3 A record in this system of records may be disclosed, as a routine use, to a Member of Congress submitting a request involving an individual, to whom the record pertains, when the individual has requested assistance from the Member with respect to the subject matter of the record.

4. A record in this system of records may be disclosed, as a routine use, to a contractor of the Agency having need for the information in order to perform a contract. Recipients of information shall be required to comply with the requirements of the Privacy Act of 1974, as amended, pursuant to 5 U.S.C. 552a(m).

5. A record related to an International Application filed under the Patent Cooperation Treaty in this system of records may be disclosed, as a routine use, to the International Bureau of the World Intellectual Property Organization, pursuant to the Patent CooperationTreaty.

6. A record in this system of records may be disclosed, as a routine use, to another federal agency for purposes of National Security review (35 U.S.C. 181) and for review pursuant to the Atomic Energy Act (42 U.S.C. 218(c)).

7. A record from this system of records may be disclosed, as a routine use, to the Administrator, General Services, or his/her designee, during an inspection of records conducted by GSA as part of that agency's responsibility to recommend improvements in records management practices and programs, under authority of 44 U.S.C. 2904 and 2906. Such disclosure shall be made in accordance with the GSA regulations governing inspection of records for this purpose, and any other relevant (i.e., GSA or Commerce) directive. Such disclosure shall not be used to make determinations about individuals.

8. A record from this system of records may be disclosed, as a routine use, to the public after either publication of the application pursuant to 35 U.S.C. 122(b) or issuance of a patent pursuant to 35 U.S.C. 151. Further, a record may be disclosed, subject to the limitations of 37 CFR 1.14, as a routine use, to the public if the record was filed in an application which became abandoned or in which the proceedings were terminated and which application is referenced by either a published application, an application open to public inspections or an issued patent.

9. A record from this system of records may be disclosed, as a routine use, to a Federal, State, or local law enforcement agency, if the USPTO becomes aware of a violation or potential violation of law or regulation.

IN THE UNITED STATES PATENT AND TRADEMARK OFFICE

Applicant:	Koss Corporation	)	
		)	
Inventors:	Michael J. Koss et al.	)	**Examiner:** Not Yet Assigned
		)	
Serial No.:	Not Yet Assigned	)	**Art Unit:** Not Yet Assigned
		)	
Filing Date:	Not Yet Assigned	)	**Atty. Docket No.** 080188PCTUSCON10

Title: SYSTEM WITH WIRELESS EARPHONES

INFORMATION DISCLOSURE STATEMENT

Commissioner for Patents
P.O. Box 1450
Alexandria, VA 22313-1450

Dear Commissioner:

Applicant, in accordance with their duty of disclosure pursuant to 37 C.F.R. § 1.56, hereby advises the United States Patent and Trademark Office of the references listed on the accompanying form PTO/SB/08.

Applicant notes that although the cited references may be relevant to the examination of the above-referenced application, under 37 C.F.R. § 1.97(h), the filing of this *Information Disclosure Statement* "shall not be construed to be an admission that the information cited in the statement is, or is considered to be, material to patentability as defined in § 1.56(b)." Applicant further notes that the filing of this *Information Disclosure Statement* is not an admission that the references cited herein constitutes prior art under 35 U.S.C. §§ 102-103 with respect to the captioned application.

Applicant submits that no fee is necessary for consideration of this *Information Disclosure Statement*. Nevertheless, the Office is hereby authorized to charge Account No. 02-1818 for any additional fees necessary for consideration of this *Information Disclosure Statement*.

Respectfully submitted,

Date: April 5, 2019

/Mark G. Knedeisen/
Mark G. Knedeisen
Reg. No. 42,747

K&L GATES LLP
K&L Gates Center
210 Sixth Avenue
Pittsburgh, Pennsylvania 15222

Ph. (412) 355-6342
Fax (412) 355-6501

PTO/SB/08a (07-09)
Approved for use through 07/31/2012. OMB 0651-0031
U.S. Patent and Trademark Office; U.S. DEPARTMENT OF COMMERCE
Under the Paperwork Reduction Act of 1995, no persons are required to respond to a collection of information unless it contains a valid OMB control number.

Substitute for form 1449/PTO				Complete if Known	
INFORMATION DISCLOSURE STATEMENT BY APPLICANT				Application Number	
				Filing Date	
				First Named Inventor	Michael J. Koss
(use as many sheets as necessary)				Art Unit	
				Examiner Name	
Sheet	1	of	4	Attorney Docket Number	080188PCTUSCON10

U.S. PATENT DOCUMENTS

Examiner Initials*	Cite No.[1]	Document Number Number - Kind Code[2] (*if known*)	Publication Date MM-DD-YYYY	Name of Patentee or Applicant of Cited Document	Pages, Columns, Lines, Where Relevant Passages or Relevant Figures Appear
		2004/0107271 A1	06-03-2004	Ahn et al.	
		2005/0064853 A1	03-25-2005	Radpour	
		2005/0198233 A1	09-08-2005	Manchester	
		2006/0206487 A1	09-14-2006	Harada	
		2006/0212442 A1	09-21-2006	Conrad	
		2006/0212444 A1	09-21-2006	Handman et al.	
		2006/0238878 A1	10-26-2006	Miyake	
		2006/0268830 A1	11-30-2006	Evans	
		2007/0008984 A1	01-11-2007	Phillips	
		2007/0037615 A1	02-15-2007	Glezerman	
		2007/0049198 A1	03-01-2007	Walsh et al.	
		2007/0053543 A1	03-08-2007	Lee	
		2007/0165875 A1	07-19-2007	Rezvani	
		2007/0297618 A1	12-27-2007	Nurmi et al.	
		2007/0253603 A1	11-01-2007	Kimura et al.	
		2008/0031470 A1	02-07-2008	Angelhag	
		2008/0062939 A1	03-13-2008	Van Horn	
		2008/0076489 A1	03-27-2008	Rosener et al.	
		2008/0019557 A1	01-24-2008	Bevirt et al.	
		2008/0242312 A1	10-02-2008	Paulson et al.	
		2008/0298606 A1	12-04-2008	Johnson et al.	
		2008/0311852 A1	12-18-2008	Hansen et al.	
		2009/0116678 A1	05-07-2009	Bevirt et al.	
		2009/0129605 A1	05-21-2009	Camp et al.	
		2009/0248178 A1	10-01-2009	Paulson et al	
		2010/0290642 A1	11-18-2010	Haseagawa	
		2013/0039510 A1	02-14-2013	Pelland et al.	
		2013/0099507 A1	04-25-2013	Moriya et al.	
		2015/0237439 A1	08-20-2015	Koss et al.	
		2017/0318378 A1	11-02-2017	Koss et al.	
		2018/0249240 A1	08-30-2018	Koss et al.	
		2019/0075390 A1	03-07-2019	Koss et al.	
		5,784,685 A	07-21-1998	Stanford et al.	
		6,389,463 B2	05-14-2002	Bolas	
		6,671,494 B1	12-30-2003	James	
		6,674,864 B2	01-06-2004	Kitamura	
		6,792,091 B2	09-14-2004	Lemchen et al.	
		6,937,712 B2	08-30-2005	Lemchen et al.	
		7,003,515 B2	02-21-2006	Glaser	
		7,027,311 B2	04-11-2006	Vanderelli	
		7,095,455 B2	08-22-2006	Jordan	
		7,099,370 B2	08-29-2006	Takahashi	

Examiner Signature		Date Considered	

*EXAMINER: Initial if reference considered, whether or not citation is in conformance with MPEP 609. Draw line through citation if not in conformance and not considered. Include copy of this form with next communication to applicant. [1] Applicant's unique citation designation number (optional). [2] See Kinds Codes of USPTO Patent Documents at www.uspto.gov or MPEP 901.04. [3] Enter Office that issued the document, by the two-letter code (WIPO Standard ST.3). [4] For Japanese patent documents, the indication of the year of the reign of the Emperor must precede the serial number of the patent document. [5] Kind of document by the appropriate symbols as indicated on the document under WIPO Standard ST.16 if possible. [6] Applicant is to place a check mark here if English language Translation is attached.

This collection of information is required by 37 CFR 1.97 and 1.98. The information is required to obtain or retain a benefit by the public which is to file (and by the USPTO to process) an application. Confidentiality is governed by 35 U.S.C. 122 and 37 CFR 1.14. This collection is estimated to take 2 hours to complete, including gathering, preparing, and submitting the completed application form to the USPTO. Time will vary depending upon the individual case. Any comments on the amount of time you require to complete this form and/or suggestions for reducing this burden, should be sent to the Chief Information Officer, U.S. Patent and Trademark Office, P.O. Box 1450, Alexandria, VA 22313-1450. DO NOT SEND FEES OR COMPLETED FORMS TO THIS ADDRESS. **SEND TO: Commissioner for Patents, P.O. Box 1450, Alexandria, VA 22313-1450.**

If you need assistance in completing the form, call 1-800-PTO-9199 (1-800-786-9199) and select option 2.

502163479 v1

PTO/SB/08a (07-09)
Approved for use through 07/31/2012. OMB 0651-0031
U.S. Patent and Trademark Office; U.S. DEPARTMENT OF COMMERCE
Under the Paperwork Reduction Act of 1995, no persons are required to respond to a collection of information unless it contains a valid OMB control number.

Substitute for form 1449/PTO				Complete if Known	
INFORMATION DISCLOSURE STATEMENT BY APPLICANT				Application Number	
				Filing Date	
				First Named Inventor	Michael J. Koss
				Art Unit	
(use as many sheets as necessary)				Examiner Name	
Sheet	2	of	4	Attorney Docket Number	080188PCTUSCON10

U.S. PATENT DOCUMENTS

Examiner Initials*	Cite No.[1]	Document Number Number - Kind Code[2] (*if known*)	Publication Date MM-DD-YYYY	Name of Patentee or Applicant of Cited Document	Pages, Columns, Lines, Where Relevant Passages or Relevant Figures Appear
		7,120,388 B2	10-10-2006	Hall	
		7,139,585 B2	11-21-2006	Hachimura et al.	
		7,266,390 B2	09-04-2007	Mathews	
		7,337,027 B2	02-26-2008	Nishiguchi et al.	
		7,467,021 B2	12-16-2008	Yuen	
		7,512,414 B2	03-31-2009	Jannard et al.	
		7,599,679 B2	10-06-2009	Awiszus	
		7,650,168 B2	01-19-2010	Bailey	
		7,680,490 B2	03-16-2010	Bloebaum et al.	
		7,697,899 B2	04-13-2010	Rofougaran	
		7,734,055 B2	06-08-2010	Chiloyan	
		7,764,775 B2	07-27-2010	Tarkoff et al.	
		7,805,210 B2	09-28-2010	Cucos	
		7,861,312 B2	12-28-2010	Lee et al.	
		7,962,482 B2	06-14-2011	Handman	
		8,023,663 B2	09-20-2011	Goldberg	
		8,055,007 B2	11-08-2011	Kim	
		8,027,638 B2	09-27-2011	Sanguino	
		8,073,137 B2	12-06-2011	Weinans et al.	
		8,086,281 B2	12-27-2011	Rabu et al.	
		8,102,836 B2	01-24-2012	Jerlhagen	
		8,190,203 B2	05-29-2012	Pelland et al.	
		8,295,516 B2	10-23-2012	Kondo et al.	
		8,335,312 B2	12-18-2012	Gerhardt et al.	
		8,401,202 B2	03-19-2013	Brooking	
		8,478,880 B2	07-02-2013	Finkelstein et al.	
		8,483,755 B2	07-09-2013	Kumar	
		8,553,865 B2	10-08-2013	Menard et al.	
		8,571,544 B2	10-29-2013	Pelland et al.	
		8,655,420 B1	02-18-2014	Pelland et al.	
		8,792,945 B2	07-29-2014	Russell et al.	
		9,049,502 B2	06-02-2015	Pelland et al.	

Examiner Signature		Date Considered	

*EXAMINER: Initial if reference considered, whether or not citation is in conformance with MPEP 609. Draw line through citation if not in conformance and not considered. Include copy of this form with next communication to applicant. [1] Applicant's unique citation designation number (optional). [2] See Kinds Codes of USPTO Patent Documents at www.uspto.gov or MPEP 901.04. [3] Enter Office that issued the document, by the two-letter code (WIPO Standard ST.3). [4] For Japanese patent documents, the indication of the year of the reign of the Emperor must precede the serial number of the patent document. [5] Kind of document by the appropriate symbols as indicated on the document under WIPO Standard ST.16 if possible. [6] Applicant is to place a check mark here if English language Translation is attached.

This collection of information is required by 37 CFR 1.97 and 1.98. The information is required to obtain or retain a benefit by the public which is to file (and by the USPTO to process) an application. Confidentiality is governed by 35 U.S.C. 122 and 37 CFR 1.14. This collection is estimated to take 2 hours to complete, including gathering, preparing, and submitting the completed application form to the USPTO. Time will vary depending upon the individual case. Any comments on the amount of time you require to complete this form and/or suggestions for reducing this burden, should be sent to the Chief Information Officer, U.S. Patent and Trademark Office, P.O. Box 1450, Alexandria, VA 22313-1450. DO NOT SEND FEES OR COMPLETED FORMS TO THIS ADDRESS. **SEND TO: Commissioner for Patents, P.O. Box 1450, Alexandria, VA 22313-1450.**

If you need assistance in completing the form, call 1-800-PTO-9199 (1-800-786-9199) and select option 2.

PTO/SB/08a (07-09)
Approved for use through 07/31/2012. OMB 0651-0031
U.S. Patent and Trademark Office; U.S. DEPARTMENT OF COMMERCE
Under the Paperwork Reduction Act of 1995, no persons are required to respond to a collection of information unless it contains a valid OMB control number.

Substitute for form 1449/PTO				Complete if Known	
INFORMATION DISCLOSURE STATEMENT BY APPLICANT				Application Number	
				Filing Date	
				First Named Inventor	Michael J. Koss
(use as many sheets as necessary)				Art Unit	
				Examiner Name	
Sheet	3	of	4	Attorney Docket Number	080188PCTUSCON10

FOREIGN PATENT DOCUMENTS

Examiner Initials*	Cite No.[1]	Foreign Patent Document: Country Code[3]-Number[4]-Kind Code[5] (*if known*)	Publication Date MM-DD-YYYY	Name of Patentee or Applicant of Cited Document	Pages, Columns, Lines, Where Relevant Passages or Relevant Figures Appear	T[6]
		JP 2004-320597 (English Abstract)	11-11-2004	Matsushita Electric Ind. Co. Ltd.		
		WO 2006/047724 A2	05-04-2006	Logitech Europe S.A.		
		WO 2007/139578 A1	12-06-2007	Sony Ericsson Mobile Communications AB		
		WO 2007/136620 A2	11-29-2007	Autonet Mobile Inc.		
		WO 2008/033478 A1	03-20-2008	Reuss, et al.		
		WO 2008/054985 A2	05-08-2008	Motorola Inc.		
		WO 2009/086555 A1	07-09-2009	Koss Corporation		

Examiner Signature		Date Considered	

*EXAMINER: Initial if reference considered, whether or not citation is in conformance with MPEP 609. Draw line through citation if not in conformance and not considered. Include copy of this form with next communication to applicant. [1] Applicant's unique citation designation number (optional). [2] See Kinds Codes of USPTO Patent Documents at www.uspto.gov or MPEP 901.04. [3] Enter Office that issued the document, by the two-letter code (WIPO Standard ST.3). [4] For Japanese patent documents, the indication of the year of the reign of the Emperor must precede the serial number of the patent document. [5] Kind of document by the appropriate symbols as indicated on the document under WIPO Standard ST.16 if possible. [6] Applicant is to place a check mark here if English language Translation is attached.

This collection of information is required by 37 CFR 1.97 and 1.98. The information is required to obtain or retain a benefit by the public which is to file (and by the USPTO to process) an application. Confidentiality is governed by 35 U.S.C. 122 and 37 CFR 1.14. This collection is estimated to take 2 hours to complete, including gathering, preparing, and submitting the completed application form to the USPTO. Time will vary depending upon the individual case. Any comments on the amount of time you require to complete this form and/or suggestions for reducing this burden, should be sent to the Chief Information Officer, U.S. Patent and Trademark Office, P.O. Box 1450, Alexandria, VA 22313-1450. DO NOT SEND FEES OR COMPLETED FORMS TO THIS ADDRESS. **SEND TO: Commissioner for Patents, P.O. Box 1450, Alexandria, VA 22313-1450.**

If you need assistance in completing the form, call 1-800-PTO-9199 (1-800-786-9199) and select option 2.

PTO/SB/08b (07-09)
Approved for use through 07/31/2012. OMB 0651-0031
U.S. Patent and Trademark Office; U.S. DEPARTMENT OF COMMERCE
Under the Paperwork Reduction Act of 1995, no persons are required to respond to a collection of information unless it contains a valid OMB control number.

Substitute for form 1449/PTO				Complete if Known	
INFORMATION DISCLOSURE STATEMENT BY APPLICANT				Application Number	
				Filing Date	
				First Named Inventor	Michael J. Koss
(use as many sheets as necessary)				Art Unit	
				Examiner Name	
Sheet	4	of	4	Attorney Docket Number	080188PCTUSCON10

NON PATENT LITERATURE DOCUMENTS			
Examiner Initials*	Cite No.[1]	Include name of the author (in CAPITAL LETTERS), title of the article (when appropriate), title of the item (book, magazine, journal, serial, symposium, catalog, etc.), date, page(s), volume-issue number(s), publisher, city and/or country where published.	T[2]
		Supplementary European Search Report for European Application No. 09731146.8 mailed June 10, 2011, 7 pages.	
		International Search Report for International Application No. PCT/US09/39754 mailed June 11, 2009, 2 pages.	
		International Preliminary Examination Report for International Application No. PCT/US09/39754 mailed October 28, 2010, 8 pages.	
		Written Opinion of the International Searching Authority for International Application No. PCT/US09/39754 mailed June 11, 2009, 5 pages.	
		IT REVIEW, "LTB 802.11 WiFi Headphones", http://itreview.belproject.com/item/1536 accessed on 03/13/2008 (4 pages).	

Examiner Signature		Date Considered	

*EXAMINER: Initial if reference considered, whether or not citation is in conformance with MPEP 609. Draw line through citation if not in conformance and not considered. Include copy of this form with next communication to applicant.

[1] Applicant's unique citation designation number (optional). [2] Applicant is to place a check mark here if English language Translation is attached. This collection of information is required by 37 CFR 1.98. The information is required to obtain or retain a benefit by the public which is to file (and by the USPTO to process) an application. Confidentiality is governed by 35 U.S.C. 122 and 37 CFR 1.14. This collection is estimated to take 2 hours to complete, including gathering, preparing, and submitting the completed application form to the USPTO. Time will vary depending upon the individual case. Any comments on the amount of time you require to complete this form and/or suggestions for reducing this burden, should be sent to the Chief Information Officer, U.S. Patent and Trademark Office, P.O. Box 1450, Alexandria, VA 22313-1450. DO NOT SEND FEES OR COMPLETED FORMS TO THIS ADDRESS. **SENDTO: Commissioner for Patents, P.O. Box 1450, Alexandria, VA 22313-1450.**

If you need assistance in completing the form, call 1-800-PTO-9199 (1-800-786-9199) and select option 2.

EUROPEAN PATENT OFFICE

Patent Abstracts of Japan

PUBLICATION NUMBER : 2004320597
PUBLICATION DATE : 11-11-04

APPLICATION DATE : 18-04-03
APPLICATION NUMBER : 2003113875

APPLICANT : MATSUSHITA ELECTRIC IND CO LTD;

INVENTOR : ISHIKAWA YOSHITO;

INT.CL. : H04R 1/10 G10K 15/02 H04M 11/08

TITLE : RADIO COMMUNICATION TERMINAL DEVICE EQUIPPED WITH PLAYER

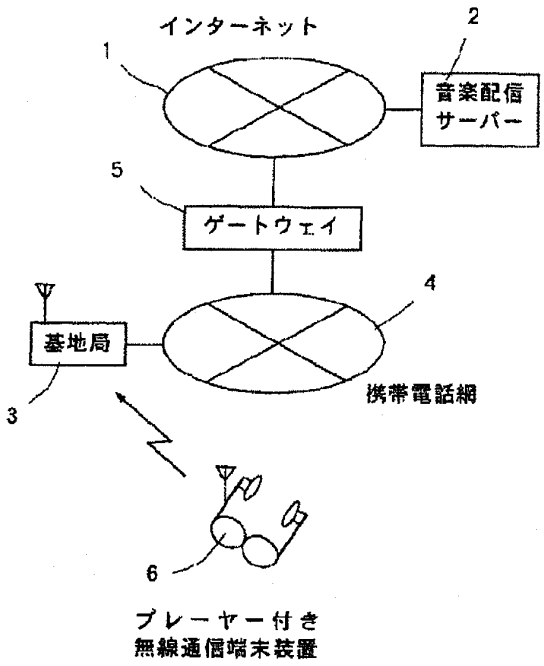

ABSTRACT : PROBLEM TO BE SOLVED: To provide a radio communication terminal device equipped with a wearable player free from the entanglement of an earphone cord and convenient in carrying thereof.

SOLUTION: There are provided a radio communication means of an eye glasses shape frame, a control means, a storage means, an operation means, a display means, a sound processing means, and a power supply means, and further an earphone at the tip end of the eye glasses frame. Hereby, when a reception instruction signal for receiving sound information is input, the radio communication means receives the sound information and stores it in the storage means, and when a reproduction instructing signal for reproducing the sound information is input, the stored sound information is read from the storage means and outputted to the earphone under the control of the control means, and further the display means displays the state of the sound information when the sound information is received or reproduced. The radio terminal communication terminal device equipped with a wearable player can thus listen to a music obtained by downloading the sound information from a music distributing server through the Internet.

COPYRIGHT: (C)2005,JPO&NCIPI

(19)日本国特許庁(JP)　(12)公開特許公報(A)　(11)特許出願公開番号
特開2004-320597
(P2004-320597A)
(43)公開日　平成16年11月11日(2004.11.11)

(51)Int.Cl.[7]	F I		テーマコード（参考）
H04R 1/10	H04R 1/10	104C	5D005
G10K 15/02	H04R 1/10	104E	5K101
H04M 11/08	G10K 15/02		
	H04M 11/08		

審査請求 未請求　請求項の数 4　OL　（全 13 頁）

(21)出願番号　特願2003-113875(P2003-113875)
(22)出願日　平成15年4月18日(2003.4.18)

(71)出願人　000005821
松下電器産業株式会社
大阪府門真市大字門真１００６番地
(74)代理人　100097445
弁理士　岩橋　文雄
(74)代理人　100103355
弁理士　坂口　智康
(74)代理人　100109667
弁理士　内藤　浩樹
(72)発明者　谷山　示
横浜市港北区綱島東四丁目３番１号　パナソニックモバイルコミュニケーションズ株式会社内

最終頁に続く

(54)【発明の名称】プレーヤー付き無線通信端末装置

(57)【要約】
【課題】携行に便利でイヤホンコードが絡むことのないウェアラブルなプレーヤー付き無線通信端末装置を提供する。
【解決手段】メガネ型フレーム内に無線通信手段と、制御手段と、記憶手段と、操作手段と、表示手段と、音声処理手段と、電池電源を設け、更に前記メガネ型フレームの先端にイヤホンを設け、音声情報を受信する受信指示信号を入力すると、無線通信手段が音声情報を受信して記憶手段に音声情報を記憶し、音声情報を再生する再生指示信号を入力すると、制御手段の制御のもと、記憶した音声情報を前記記憶手段から読み出してイヤホンに出力するとともに、音声情報を受信する際あるいは再生する際の状態表示を表示手段で行うよう構成した。ウェアラブルなプレーヤー付き無線通信端末装置で、音楽配信サーバーからインターネットを介して音声情報をダウンロードした音楽を聴くことができる。
【選択図】　図1

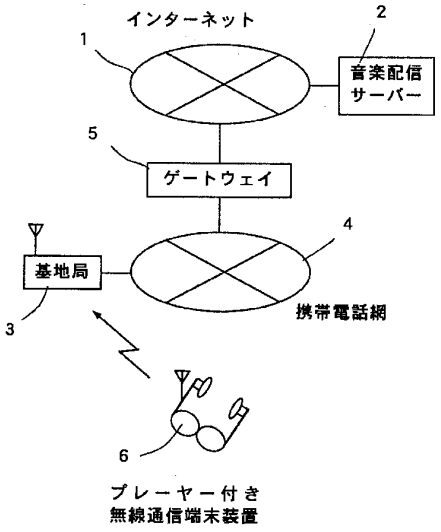

【特許請求の範囲】
【請求項１】
メガネ型フレームと、無線通信手段と、制御手段と、記憶手段と、操作手段と、表示手段と、音声処理手段と、電池電源とイヤホンを有し、
前記メガネ型フレーム内に前記無線通信手段と、前記制御手段と、前記記憶手段と、前記操作手段と、前記表示手段と、前記音声処理手段と、前記電池電源を設け、前記メガネ型フレームの先端に前記イヤホンを設け、
前記操作手段から音声情報を受信する受信指示信号を入力すると、前記制御手段の制御により、前記無線通信手段が音声情報を受信して前記記憶手段に音声情報を記憶し、
前記操作手段から音声情報を再生する再生指示信号を入力すると、前記制御手段の制御により、前記記憶手段から音声情報を読み出して前記イヤホンに出力するとともに、
音声情報を受信する際あるいは再生する際の状態表示を前記表示手段で行うようにしたプレーヤー付き無線通信端末装置。
【請求項２】
先端にイヤホンを設けた前記メガネ型フレームをバネ性を有する線状の部材として形成したことを特徴とする請求項１に記載のプレーヤー付き無線通信端末装置。
【請求項３】
前記表示手段は、前記メガネ型フレームに取り付けたメガネレンズと、前記メガネレンズを照射する照明手段で構成したことを特徴とする請求項１に記載のプレーヤー付き無線通信端末装置。
【請求項４】
前記表示手段の前記メガネ型フレームと前記メガネレンズの位置関係を、前記メガネ型フレームの上に内に前記メガネレンズを乗せた位置関係として、前記照明手段で前記メガネレンズを下方から照射するように構成したことを特徴とする請求項３に記載のプレーヤー付き無線通信端末装置。
【発明の詳細な説明】
【０００１】
【発明の属する技術分野】
本発明は、音声情報を無線通信により受信して記憶手段に記憶した後、記憶手段から音声情報を読み出して再生するプレーヤー付き無線通信端末装置に関する。
【０００２】
【従来の技術】
インターネット上の音楽配信サーバーから音声情報を無線通信端末装置に配信する音楽配信サービスが既に実用化されている。図１３に従来の音楽配信システムのシステム構成図を示す。インターネット１には、ディジタル化した音楽情報を配信する音楽配信サーバー２が接続されている。そして、音楽配信サーバー２に対しては、音楽配信端末装置９００が基地局３、携帯電話網４、ゲートウェイ５、インターネット１を介してアクセスできるようにしている。音楽配信端末装置９００は、筐体９０１内に無線通信手段９０２と、テンキー等のキー入力手段９０３と、表示手段９０４と、記憶手段９０５とを有し、筐体９０１にイヤホン９０６を差し込んで使用する構造になっている。
【０００３】
音楽配信端末装置９００のキー入力手段９０３に音楽配信サーバーのＵＲＬを入力してアクセスすると、携帯電話網４とインターネット１を介して音楽配信サーバー２と交信することができ、音楽配信サーバー２から提供される配信メニューを音楽配信端末装置９００の表示手段９０４で見て、配信を希望する音楽コンテンツをキー入力して選択することができる。音楽配信サーバー２は、選択された音楽コンテンツの音声情報を図示しないデータベースから読み出して音楽配信端末装置９００に送信する。音楽配信端末装置９００は送信されてきた音声情報を装置の記憶手段９０５に記憶する。音楽配信が終了すると、記憶手段９０５から音声情報を読み出して再生し、イヤホン９０６に出力するようにしている。

【０００４】
従来の音楽配信端末装置９００は、キー入力手段９０３と表示手段９０４を用いて音楽配信サーバーにアクセスし、ダウンロードした音楽情報をイヤホンやヘッドホンで再生する構成を採っている。ダウンロード操作は、選曲操作を含め、メニューその他の文字表示をして操作を繰り返す必要があるため、ある程度の大きさの表示手段と、ある程度の大きさのキー入力手段９０３を必要としていた。そのため、音楽配信端末装置９００がかさばり、携行するときにはポケットや鞄に入れて持ち運ばなければならないという欠点があった。また、イヤホンコードがからみついて扱いにくいという欠点もあった（例えば、特許文献１、特許文献２）。
【０００５】
【特許文献１】
特開２００１－２８５７２号公報（第１１頁、第４図）
【特許文献２】
特開２００２－２３７６８号公報（第３頁、第１図）
【０００６】
【発明が解決しようとする課題】
本発明は、上記従来の欠点を解消した携行に便利で、イヤホンコードが絡むことのない、身にまとった感覚のいわゆるウエアラブルなプレーヤー付き無線通信端末装置を提供し、何もポケットや鞄に入れたりせずに、手に何も持たない感覚で、音声情報を音楽配信サーバー等からダウンロードして再生できるようにすることを第一の目的としている。
【０００７】
また、本発明は音声情報をダウンロードする際の操作状況や、ダウンロードした音声情報を再生する際の操作状況を示す状態表示を利用者の視野内に確実に表示するようにしたプレーヤー付き無線通信端末装置を提供することを第二の目的としている。
【０００８】
【課題を解決するための手段】
上記第一の課題を解決するために、本発明に係るプレーヤー付き無線通信端末装置は、メガネ型フレームと、無線通信手段と、制御手段と、記憶手段と、操作手段と、表示手段と、音声処理手段と、電池電源とイヤホンを有し、メガネ型フレーム内に無線通信手段と、制御手段と、記憶手段と、操作手段と、表示手段と、音声処理手段と、電池電源を設け、更に前記メガネ型フレームの先端にイヤホンを設け、操作手段から音声情報を受信する受信指示信号を入力すると、制御手段の制御により、無線通信手段が音声情報を受信して記憶手段に音声情報を記憶し、操作手段から音声情報を再生する再生指示信号を入力すると、制御手段の制御のもと、記憶した音声情報を前記記憶手段から読み出してイヤホンに出力するとともに、音声情報を受信する際あるいは再生する際の状態表示を表示手段で行う構成を採る。
【０００９】
この構成により、携行に便利で、イヤホンコードが絡むことのないプレーヤー付き無線通信端末装置を実現している。
【００１０】
更に本発明は、先端にイヤホンを設けたメガネ型フレームをバネ性を有する線状の部材として形成して、メガネ型フレームの鼻当てと一対のイヤホンの３箇所によりプレーヤー付き無線通信端末装置を利用者の顔に支持する構成を採る。
【００１１】
この構成により、プレーヤー付き無線通信端末装置を小型、軽量で、顔からはずれにくい、しっかりと身にまとった感覚の、いわゆるウェアラブル感覚の装置として実現している。
【００１２】
また本発明は、上記第二の課題を解決するために、表示手段をメガネ型フレームに取り付けたメガネレンズとメガネレンズを照射する照明手段とで構成している。

【００１３】
この構成により、音声情報をダウンロードする際の操作状況や、音楽を再生する際の操作状況を示す状態表示を利用者の視野内に確実に表示するようにしている。
【００１４】
また本発明は、メガネ型フレームとメガネレンズの位置関係を、メガネ型フレームの上にメガネレンズを乗せた位置関係として、メガネ型フレームに設けた照明手段でメガネレンズを下方から照射する構成を採る。
【００１５】
この構成を用いることにより、人間の目が上を見るよりも下を見るほうが容易であることを利用して、状態表示を利用者の視野内により確実に表示するようにしたプレーヤー付き無線通信端末装置を実現している。
【００１６】
【発明の実施の形態】
（実施の形態１）
本発明の第１の実施の形態について、以下図面とともに説明する。図１に、本発明の第１の実施の形態に係るプレーヤー付き無線通信端末装置６を用いた音楽配信システムのシステム構成図を示す。本発明は、既に図１３で説明した従来の音楽配信システムの音楽配信端末９００に代わるものとして、プレーヤー付き無線通信端末装置６を用いたものであり、システム構成要素の同じ部分については同一の番号を付して説明を省略する。本発明のプレーヤー付き無線通信端末装置６は、基地局３，携帯電話網４、ゲートウェイ５と、インターネット１を介して音楽配信サーバー２にアクセスして、音声情報をダウンロードして再生する。図２と図３に、プレーヤー付き無線通信端末装置６を利用者の顔６０に装着したときの使用状態図を、図４にプレーヤー付き無線通信端末装置６を水平方向に切断した断面図を、図５にプレーヤー付き無線通信端末装置６の正面図を示す。
【００１７】
図２から図５に示したように、プレーヤー付き無線通信端末装置６は、概ねメガネの形をしており、左右を一体に形成したメガネレンズ１０の下に右と左にのびるメガネ型フレーム２０、２１を取り付けている。メガネ型フレーム２０、２１は互いに向き合う端面を鼻当て３０、３１として、鼻当て３０、３１の反対側を内側と下側に湾曲した形に形成した金属製の線バネ２２、２３を埋め込んだバネ性を有する線状のテンプル部分として形成し、先端にイヤホン４０、４１を設けている。顔に装着していない状態ではメガネ型フレーム２０、２１のそれぞれのテンプル部分の先に取り付けた一対のイヤホン４０、４１の間隔が装着する人間の耳の間隔より小さくなるように、またメガネ型フレーム２０、２１の鼻当て３０、３１とイヤホン４０、４１との距離が装着する人間の鼻の表面と耳孔との距離よりも短くなるように形成している。
【００１８】
プレーヤー付き無線通信端末装置６を顔に装着するときは、メガネ型フレーム２０、２１を広げて装着する。図２、図３のように、利用者の顔６０には、プレーヤー付き無線通信端末装置６のメガネ型フレーム２０、２１の先端のイヤホン４０、４１を左右の耳孔に嵌め込み、鼻当て３０、３１を鼻に当てて装着する。メガネ型フレーム２０、２１、特にテンプル部分は顔に装着する時に広げられるため、元に戻ろうとする力で顔６０を左右方向に挟み込む。また、鼻当て部３０、３１とイヤホン４０、４１が顔６０を前後方向に挟み込む。そのため、図３のように利用者の顔６０の大きさが多少大きかったり、小さかったりしたとしても、プレーヤー付き無線通信端末装置６はメガネ型フレーム２０、２１の特にテンプル部分が変形して利用者の顔６０の前後左右の大きさににフィットする。
【００１９】
メガネ型フレーム内に埋め込んだ金属製の線バネ２２、２３を無線通信手段のアンテナとしても用いる。また、メガネ型フレーム２０、２１の外側表面には操作手段として、選択キー１００と、決定キー１０１を設けており、選択キー１００と決定キー１０１をそれぞれ単独で、あるいは両方を同時に押すことによって各種の操作指示信号を入力できるよう

にしている。

【００２０】

このように、プレーヤー付き無線通信端末装置６は顔に装着することができるため、身にまとったいわゆるウェアラブルな装置として装着することができ、携行に便利であり、イヤホンコードが絡み付くことが無く使い勝手が良い。

【００２１】

図６に、本発明の第１の実施の形態にかかるプレーヤー付き無線通信端末装置６の内部構成をブロック図として示す。図６で、メガネ型フレーム２０、２１の中には、無線通信手段７０と、制御手段８０と、記憶手段９０と、音声処理手段９３と、操作手段である選択キー１００と、決定キー１０１と、表示手段１１０、１１１と、電池電源１２０を設け、更に前記メガネ型フレーム２０、２１の先につけたテンプル部分２２、２３の各先端にイヤホン４０、４１を設けている。特に表示手段１１０、１１１は、メガネ型フレーム２０、２１にＬＥＤ１３０、１３１、１３２、１３３をメガネレンズ１０に向けて配置して、メガネレンズ１０を照射するようにしている。これらの各手段は、バスライン２００によって接続されており、操作手段である選択キー１００、決定キー１０１からの入力により、制御手段８０が音声プレーヤ付き無線通信端末装置としての動作を行うようにしている。

【００２２】

すなわち、操作手段である選択キー１００、決定キー１０１を用いて、音声情報を受信する受信指示信号を入力すると、制御手段８０の制御のもと、無線通信手段７０がアンテナを兼ねるテンプル部分２２、２３から図１で示したように、音楽配信サーバー２にアクセスし、音楽情報をダウンロードする。音声処理手段９３は、音楽配信サーバー２から受信した無線信号を音声信号に変換する音声処理を行い、記憶手段９０に音声情報を記憶する。操作手段である選択キー１００と決定キー１０１を用いて音声情報を再生する再生指示入力信号を入力すると、制御手段８０の制御のもと、記憶手段９０に記憶した音声情報を読み出してイヤホン４０、４１に出力する。なお、音声情報を受信する際あるいは再生する際には、前記表示手段１１０、１１１でＬＥＤ１３０、１３１、１３２、１３３を点灯してメガネレンズを照射して、ＬＥＤ１３０等の光による状態表示を行う。

【００２３】

本発明のプレーヤー付き無線通信端末装置６の操作手段である選択キー１００、決定キー１０１を用いた基本的な操作方法を説明する。本発明のプレーヤー付き無線通信端末装置６には選択キー１００と決定キー１０１をメガネフレーム２０、２１の表面にそれぞれ設けている。プレーヤー付き無線通信端末装置６の利用者は顔６０にプレーヤー付き無線通信端末装置６を装着した状態で、両手で選択キー１００と決定キー１０１を同時に押すことにより、電源をオン、オフすることができる。そして、右手で選択キー１００を押すと、選択可能なメニューが記憶手段９０から読み出されてイヤホンに出力される。その後、所定時間内に選択キー１００が押されると、次に選択可能なメニューが読み出される。メニューが読み出されたま、所定時間が経過するとそのメニューを選択したという扱いがされる。また、左手で決定キー１０１を押すことでもメニューを確定することができるようにしている。

【００２４】

図７に、選択キー１００、決定キー１０１を用いた基本的な操作方法をフローチャートとして示す。図７において、両手で選択キー１００と決定キー１０１を同時に押して電源をオンにすると（ステップＳ１）、図示しない操作制御用のタイマーが起動する（ステップＳ２）。選択キー１００が押されると（ステップＳ３）イヤホン４０、４１から選択可能なメニューが音声で出力される（ステップＳ４）。決定キー１０１が押されないまま（ステップＳ５）、タイムアウトする前に（ステップＳ６）、選択キー１００が押されると、次のメニューが順次読み出される。タイムアウトするか、決定キー１０１が押されると、読み出さたメニューが選択されたものとして確定する（ステップＳ７）。そして、確定した項目の動作を開始する（ステップＳ８）。動作中に選択キー１００と決定キー１０１が

同時に押されたときは（ステップＳ９）、動作を停止する（ステップＳ１０）。そして再び、選択キー１００と決定キー１０１が同時に押されたときは（ステップＳ１１）、電源をオフにする（ステップＳ１２）。動作中に選択キー１００と決定キー１０１が同時に押されないときは、電源をオフにすることなく動作を継続する。

【００２５】

図８に、本発明のプレーヤー付き無線通信端末装置６で音楽情報をダウンロードする際の操作手順をフローチャートとして示す。なおここでは、説明を簡単にするためにプレーヤー付き無線通信端末装置６の記憶手段９０には、予め音楽配信サーバーのＵＲＬを記憶してあるものとして説明する。

【００２６】

まず、プレーヤー付き無線通信端末装置６の操作手段である選択キー１００と決定キー１０１を両手で同時に押して電源をオンにし、電池電源１２０から無線通信手段７０と制御手段８０に電源供給して、表示手段１１０の照明手段のＬＥＤ１３０をパイロットランプとして点灯させる（ステップＳ２０）。次に、操作手段の選択キー１００を押して選択できるメニューを順次読みだし、「ＵＲＬを選択しますか？」というメッセージを出力させた状態で、所定時間を経過させるか、決定キー１０１を押して、ＵＲＬの選択動作を開始する（ステップＳ２１）。ＵＲＬの選択は、前記操作手段１００を所定時間内に次々と押すことによってＵＲＬを順次、イヤホンに音声出力させて切り替えることができる。なお、選択キー１００を押す毎に、照明手段であるＬＥＤ１３１、１３２、１３３を追加点灯していくことにより、何番目のＵＲＬが選択可能かを視覚的に確認できるようにしている（ステップＳ２２）。ＵＲＬを出力させた状態で、所定時間を経過させるか、決定キー１０１を押してＵＲＬを確定する（ステップＳ２４）。ＵＲＬが確定すると、制御手段８０は無線通信手段７０により、メガネ型フレームのテンプル部分兼アンテナ２２、２３から、基地局３，携帯電話網４、ゲートウェイ５、インターネット１を経由して、音楽配信サーバー２にアクセスする（ステップＳ２５）。

【００２７】

プレーヤー付き無線通信端末装置６は、音楽配信サーバー２から配信可能な音楽情報名を受信して、イヤホン４０、４１に音声出力する。例えば音楽配信サーバーが、クラシック、ポピュラー、ポップスの３つのジャンルについて人気の高いベスト５までの曲が配信可能であるとして説明すると、配信可能なジャンル名が「１．クラシック、２．ポピュラー、３．ポップス。」というように順次出力される。そして、希望するジャンルを選択すると配信可能な曲名が順次出力されるので（ステップＳ２６）、既に説明したような使い方で選択キー１００と決定キー１０１を用いて、希望する曲名を決定する（ステップＳ２７）。このことにより、決定された曲の音楽情報がダウンロードされる（ステップＳ２８）。１つの曲のダウンロードが終わってから、引き続き他の曲についてダウンロードするときは（ステップＳ２９）、ステップＳ２６に戻り、ステップＳ２８までの操作をして他の曲をダウンロードする。終了するときは、操作手段の選択キー１００と決定キー１０１を同時に押して動作を停止して（ステップＳ２９）、再び選択キー１００と決定キー１０１を同時に押して電源を切る（ステップＳ３０）。

【００２８】

次に、ダウンロードして記憶手段９０に記憶した音楽情報を再生する動作を説明する。図９に、プレーヤー付き無線通信端末装置６で音声情報を再生する際の操作手順をフローチャートとして示す。まず、プレーヤー付き無線通信端末装置６の操作手段の選択キー１００と決定キー１０１を同時に押すと、電池電源１２０が無線手段７０と制御手段８０に供給され、表示手段１１０の内の照明手段のＬＥＤ１３０がパイロットランプとして点灯するのは図８のフローチャートと同じである（ステップＳ３１）。次に、選択キー１００で「音楽再生を開始しますか？」メニューを読み出してイヤホンに出力し、タイムアウトさせるか、決定キー１０１を押して、音楽再生モードを開始する（ステップＳ３２）。選択キー１００を押すと（ステップＳ３３）、曲名がイヤホンに出力される。なお、選択キー１００を押す毎に、再生可能な曲名をイヤホン４０、４１に音声出力するとともに、照明

手段であるＬＥＤ１３１、１３２、１３３を追加点灯していくことにより、何番目の曲名であるかを視覚的に確認することができるようにしている（ステップＳ３４）。タイムアウトさせるか決定キー１０１を押して、再生する曲を確定する（ステップＳ３５）。制御手段は選択された曲を記憶手段の再生リストに記憶する（ステップＳ３６）。再生リストに記憶すると、更に再生する曲を追加するかを入力する画面が表示されるので、所定時間内に選択キー１００を押すと、スップＳ３３に戻り、ステップＳ３６までの操作を行うことにより、再生する曲を選択する。ステップＳ３７で、タイムアウトさせると、再生する曲を追加しないものとして、再生リストに記憶した順に音楽を再生する（ステップＳ３８）。

【００２９】

音楽の再生は、音声をイヤホン４０、４１に出力するとともに、再生している音楽の番号に相当する数の照明手段を点灯する。なお、曲の始めは単に再生している音楽の番号に相当する数の照明手段を点灯し、音楽にあわせて色彩を変化させるようにしている。クラシックを聴いているときに、メガネレンズを照射する光の色がセピア色に変わると、メガネレンズ越しに見える風景が古い映画を見ているように変わる。明るい長調の曲を聴いているときは黄色や赤の暖色系の光を点滅し、短調の曲を聴いているときは、淡い白色や水色の光をゆっくりと変化させるなど、再生曲に対する表示内容を自動選択するようにして、音楽を聴いている気分を高揚させることができる。再生リストに記憶した曲の再生がすべて終わると、そのまま所定時間内に操作手段の選択キー１００を操作しないと電源が切れるようにしている。なお、曲の再生がすべて終わってから所定時間内に選択キー１００が操作されると、ステップＳ３３に戻り、再生する曲名を選択できる様にしている。

【００３０】

なお、上記実施の形態では、インターネット１の音楽配信サーバー２から音声情報をダウンロードする音楽配信端末装置として、プレーヤー付き無線通信端末装置６を説明したが、音楽情報を無線で送信するネットワークはこれに限られるものではなく、他の無線ローカルエリアネットワークから音楽情報をプレーヤー付き無線通信端末装置に送信するシステムであっても良い。

【００３１】

また、プレーヤー付き無線通信端末装置が受信する音声情報には、音楽そのものの情報の他に、音楽そのものの情報に付随した曲の題名や曲の解説の音声、歌手の声、詩の朗読、文章の朗読、リズム、ダウンロードの操作手順を案内する音声等が含まれる。

【００３２】

（実施の形態２）

次に、本発明の第２の実施の形態に係るプレーヤー付き無線通信端末装置について説明する。第１の実施の形態では、メガネ型フレーム２０、２１に埋め込んだ金属製の線バネ２２、２３を無線通信手段のアンテナとして用いたが、本発明の第２の実施の形態に係るプレーヤー付き無線通信端末装置６２では、アンテナ１３２をメガネ型フレーム２０、２１に交わるように立てられる構造にしている。

【００３３】

図１０に本発明の第２の実施の形態に係るプレーヤー付き無線通信端末装置６２の外観図を示す。また、図１１にプレーヤー付き無線通信端末装置６２を利用者の顔６０に装着した使用状態を示す。図１０と図１１では、メガネ型フレーム２０に対して１本のアンテナ１３２を立てた状態を示すが、左右のメガネ型フレーム２０、２１のそれぞれから計２本のアンテナを立てても良い。このように、アンテナを立てて、利用者の顔６０から離す事により、アンテナの感度を高めることができる。図１０と図１１に示す第２の実施の形態では、アンテナ１３２をメガネ型フレーム２０に対して回転自在に取り付け、使用時にはメガネ型フレームと交わるように立てるようにしている。なお、アンテナ１３２を伸縮式のアンテナとしても良い。

【００３４】

（実施の形態３）

次に、本発明の第３の実施の形態に係るプレーヤー付き無線通信端末装置６３について説明する。図１２は、本発明の第３の実施の形態に係るプレーヤー付き無線通信端末装置６３を用いた博物館等の展示会場における見学者用音声配信システムのシステム構成図である。この展示会場における見学者用音声配信システムは、一つの敷地内に設置したブルートゥース等の短距離無線通信を用いたローカルエリアネットワーク７０に見学者用音声配信サーバー７１を接続し、複数の基地局７２、７３、７４、７５をローカルエリアネットワーク７０の基地局として割り付けてある。そして、プレーヤー付き無線通信端末装置６３を携行する見学者が基地局７２に接近すれば、基地局７２に接近した見学者用の音声情報を自動的に見学者用音声配信サーバー７１から配信し、見学者が移動して基地局７３に接近すれば、基地局７３に接近した見学者用の音声情報を自動的に配信するようにしている。以下、同様に見学者の移動に応じて、基地局７４に接近した見学者用の音声情報、基地局７５に接近した見学者用の音声情報が順次自動的に配信される。見学者は、見学通路を歩いていくと、展示物の説明を自動的に受信して聞くことができる。

【００３５】

上記第３の実施の形態では、博物館や展示会場などにおける展示情報だけでなく、見学経路誘導用のナビゲーション情報をプレーヤー付き無線通信端末装置６３に配信して見学者を誘導することもできる。このとき、右に曲がるときは表示手段のメガネレンズの右端の照明手段を点滅させ、左に曲がるときはメガネレンズの左端の照明手段を点滅させることにより、見学者を音声情報に加えて、表示手段を用いて視覚的に誘導することができる。

【００３６】

【発明の効果】

本発明に係るプレーヤー付き無線通信端末装置によれば、メガネ型フレーム内に無線通信手段と、制御手段と、記憶手段と、操作手段と、表示手段と、音声処理手段と、電池電源を設け、更に前記メガネ型フレームの先端にイヤホンを設け、操作手段に音声情報を受信する受信指示信号を入力すると、制御手段の制御により、無線通信手段が音声情報を受信して記憶手段に音声情報を記憶し、操作手段に音声情報を再生する再生指示を入力すると、制御手段の制御により、記憶した音声情報を前記記憶手段から読み出してイヤホンに出力するとともに、音声情報を受信する際あるいは再生する際の状態表示を表示手段で行うことにより、携行に便利で、イヤホンコードが絡むことのない、音楽配信サーバーからインターネットを介して音声情報をダウンロードすることができるプレーヤー付き無線通信端末装置を得ることが出来る。

【００３７】

更に本発明は、メガネ型フレームをバネ性を有する線状の部材として形成して、メガネ型フレームの鼻当てと一対のイヤホンの３箇所によりプレーヤー付き無線通信端末装置を利用者の顔に装着するようにしたことにより、プレーヤー付き無線通信端末装置を身にまとった感覚の、いわゆるウェアラブル感覚で使うことができる。

【００３８】

また本発明は、表示手段として複数の照明手段をメガネ型フレーム内に組み込み、複数の照明手段の光を同時に又は選択的にメガネレンズに照射することにより、音声情報をダウンロードする際の操作状況や、音楽を再生する際の操作状況を示す状態表示を利用者の視野内で確認することができる。

【図面の簡単な説明】

【図１】本発明の第１の実施の形態にかかるプレーヤー付き無線通信端末装置を用いた音楽配信システムの構成図

【図２】本発明の第１の実施の形態にかかるプレーヤー付き無線通信端末装置を利用者の顔に装着したときの使用状態図

【図３】本発明の第１の実施の形態にかかるプレーヤー付き無線通信端末装置を利用者の顔に装着したときの使用状態図

【図４】本発明の第１の実施の形態にかかるプレーヤー付き無線通信端末装置の断面図

【図５】本発明の第１の実施の形態にかかるプレーヤー付き無線通信端末装置の正面図

【図６】本発明の第１の実施の形態にかかるプレーヤー付き無線通信端末装置のブロック図
【図７】本発明の第１の実施の形態にかかるプレーヤー付き無線通信端末装置の操作手段による操作手順のフローチャート
【図８】本発明の第１の実施の形態にかかるプレーヤー付き無線通信端末装置の音声情報のダウンロード時の操作手順のフローチャート
【図９】本発明の第１の実施の形態にかかるプレーヤー付き無線通信端末装置の音声情報の再生時の操作手順のフローチャート
【図１０】本発明の第２の実施の形態にかかるプレーヤー付き無線通信端末装置の斜視図
【図１１】本発明の第２の実施の形態にかかるプレーヤー付き無線通信端末装置を利用者の顔に装着したときの使用状態図
【図１２】本発明の第３の実施の形態にかかるプレーヤー付き無線通信端末装置を用いた見学者用音声配信システムの構成図
【図１３】従来の音楽配信システムのシステム構成図
【符号の説明】
１　インターネット
２　音楽配信サーバー
３　ゲートウェイ
４　携帯電話網
５　基地局
６　プレーヤー付き無線通信端末装置
１０　メガネレンズ
２０、２１　メガネ型フレーム
２２、２３　テンプル部分
３０、３１　鼻当て
４０、４１　イヤホン
７０　無線通信手段
８０　制御手段
９０　記憶手段
９３　音声処理手段
１００　選択キー
１０１　決定キー
１１０、１１１　表示手段
１２０　電池電源
１３０、１３１、１３２、１３３　ＬＥＤ

【図１】

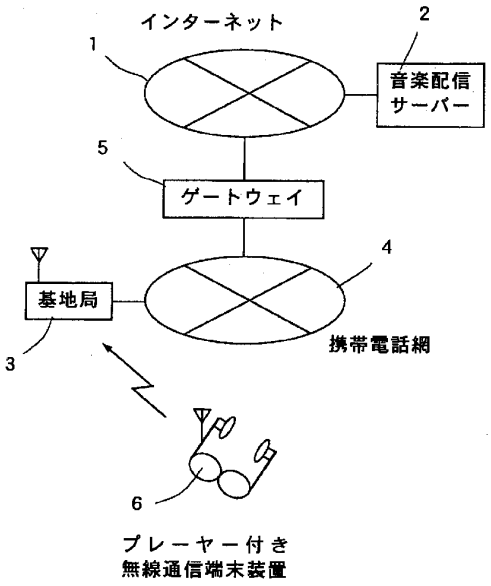
インターネット
1
2
音楽配信
サーバー
5
ゲートウェイ
4
基地局
3
携帯電話網
6
プレーヤー付き
無線通信端末装置

【図２】

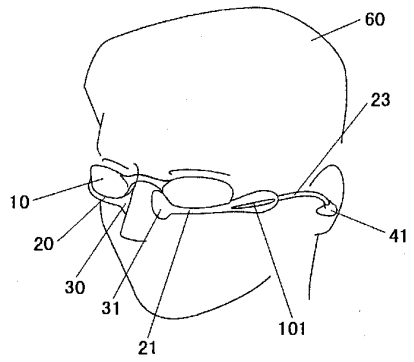
60
23
10
41
20
30
31
101
21

【図３】

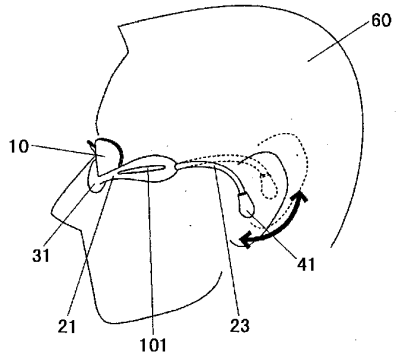
60
10
31
41
21
101
23

【図４】

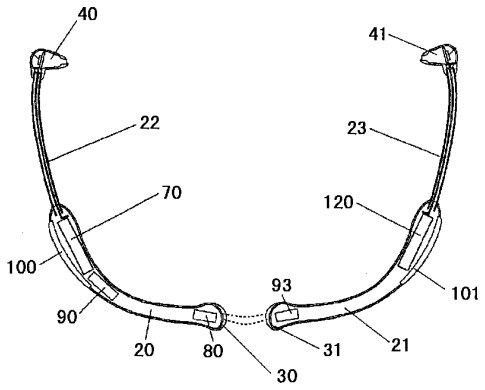
40
41
22
23
70
120
100
101
93
90
20
80
31
21
30

【図５】

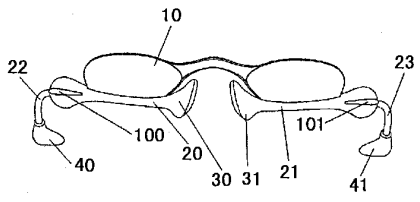
10
22
23
100
101
20
40
30
31
21
41

【図６】

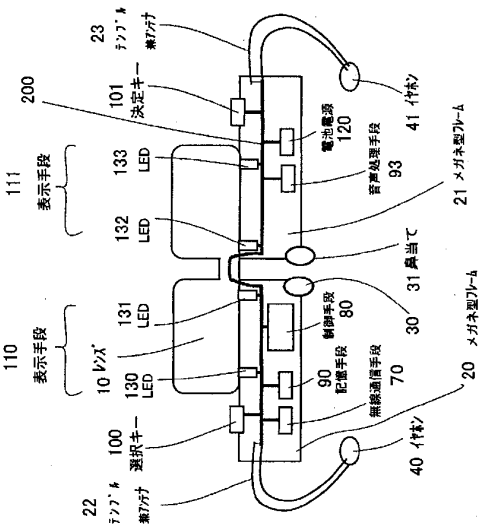
23 テンプル 兼アンテナ
200
101 決定キー
111 表示手段
133 LED
132 LED
電池電源 120
音声処理手段 93
21 メガネ型フレーム
31 鼻当て
110 表示手段
131 LED
10 レンズ
130 LED
制御手段 80
30
90 記憶手段
無線通信手段 70
20 メガネ型フレーム
100 選択キー
22 テンプル 兼アンテナ
40 イヤホン
41 イヤホン

【図７】

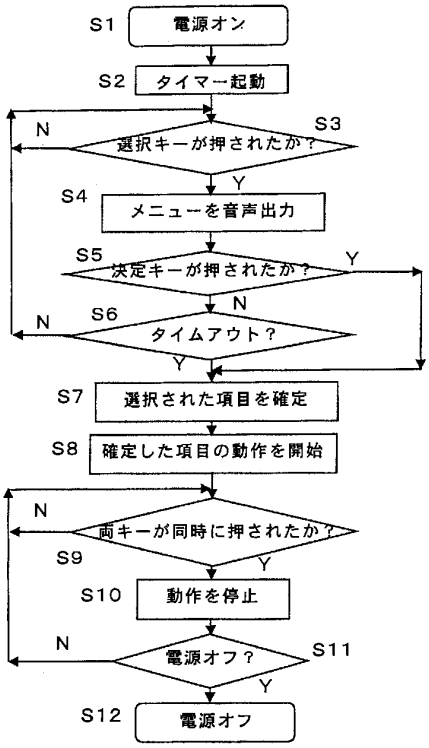
S1 電源オン
S2 タイマー起動
S3 選択キーが押されたか？
N
Y
S4 メニューを音声出力
S5 決定キーが押されたか？
Y
N
S6 タイムアウト？
N
Y
S7 選択された項目を確定
S8 確定した項目の動作を開始
N
両キーが同時に押されたか？
S9
Y
S10 動作を停止
N
電源オフ？
S11
Y
S12 電源オフ

【図８】

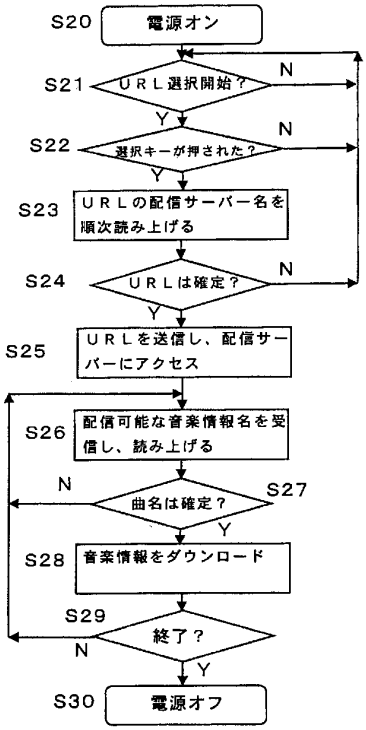
S20 電源オン
S21 ＵＲＬ選択開始？
N
Y
S22 選択キーが押された？
N
Y
S23 ＵＲＬの配信サーバー名を順次読み上げる
S24 ＵＲＬは確定？
N
Y
S25 ＵＲＬを送信し、配信サーバーにアクセス
S26 配信可能な音楽情報名を受信し、読み上げる
N
曲名は確定？
S27
Y
S28 音楽情報をダウンロード
S29 終了？
N
Y
S30 電源オフ

【図９】

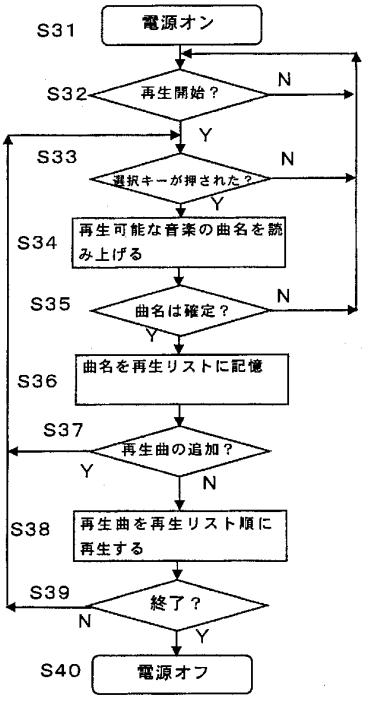
S31 電源オン
S32 再生開始？
N
Y
S33 選択キーが押された？
N
Y
S34 再生可能な音楽の曲名を読み上げる
S35 曲名は確定？
N
Y
S36 曲名を再生リストに記憶
S37 再生曲の追加？
Y
N
S38 再生曲を再生リスト順に再生する
S39 終了？
N
Y
S40 電源オフ

【図１０】

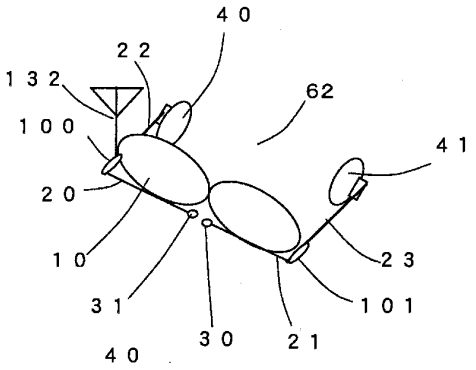

【図１１】

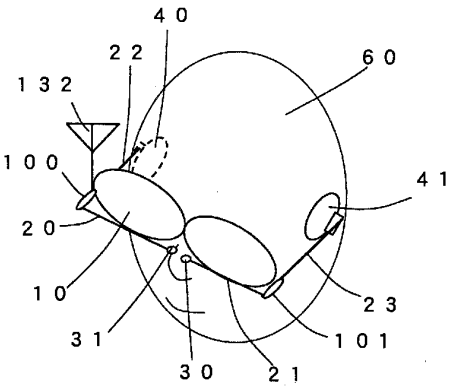

【図１２】

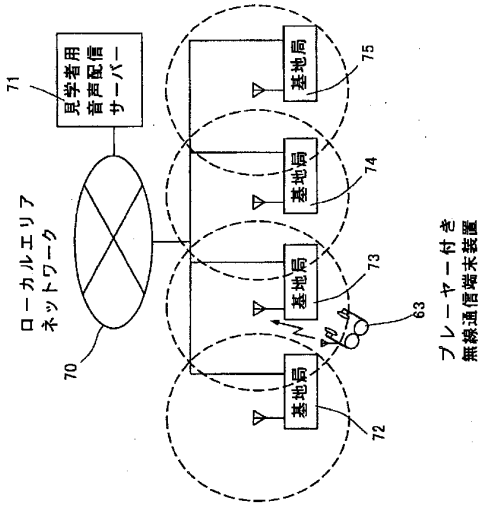

【図１３】

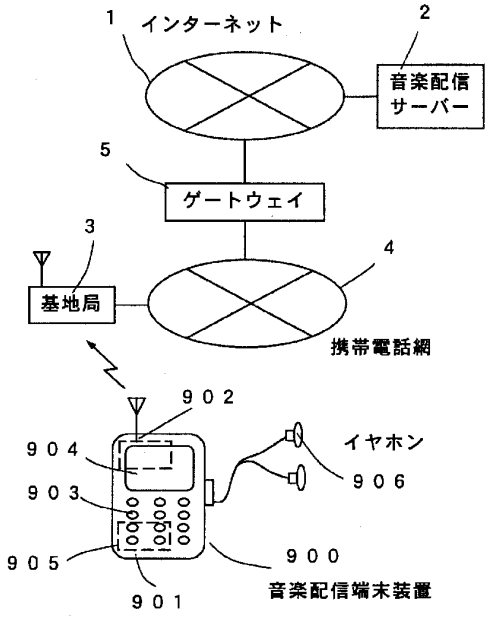

フロントページの続き

(72)発明者 石川 善都
横浜市港北区綱島東四丁目３番１号 パナソニックモバイルコミュニケーションズ株式会社内

Ｆターム(参考) 5D005 BB11 BB14
5K101 KK18 LL12 MM07 NN12 NN21

3 of 3 DOCUMENTS

JP2004320597A 2004-11-11 **RADIO COMMUNICATION TERMINAL DEVICE EQUIPPED WITH PLAYER** (en)

English Abstract:

PROBLEM TO BE SOLVED: To provide a radio communication terminal device equipped with a wearable player free from the entanglement of an earphone cord and convenient in carrying thereof.

SOLUTION: There are provided a radio communication means of an eye glasses shape frame, a control means, a storage means, an operation means, a display means, a sound processing means, and a power supply means, and further an earphone at the tip end of the eye glasses frame. Hereby, when a reception instruction signal for receiving sound information is input, the radio communication means receives the sound information and stores it in the storage means, and when a reproduction instructing signal for reproducing the sound information is input, the stored sound information is read from the storage means and outputted to the earphone under the control of the control means, and further the display means displays the state of the sound information when the sound information is received or reproduced. The radio terminal communication terminal device equipped with a wearable player can thus listen to a music obtained by downloading the sound information from a music distributing server through the Internet.

Applicants/Assignees: MATSUSHITA ELECTRIC IND CO LTD

Inventors: TANIYAMA SHIMESU;
ISHIKAWA YOSHITO

Application Number: JP2003113875

Application/Filing Date: 2003-04-18

Classifications:
IPC[7]: H04R 1/10 A
IPC[7]: G10K 15/02 B; H04M 11/08 B
IPC[8]: H04R1/10 (2006-01-01; C, F, I, 2005-12-20; R, M, JP)
IPC[8]: H04R1/10 (2006-01-01; A, F, I, 2005-12-20; R, M, JP)
IPC[8]: G10K15/02 (2006-01-01; C, L, I, 2005-12-20; R, M, JP)
IPC[8]: G10K15/02 (2006-01-01; A, L, I, 2005-12-20; R, M, JP)
IPC[8]: H04M11/08 (2006-01-01; C, L, I, 2005-12-20; R, M, JP)
IPC[8]: H04M11/08 (2006-01-01; A, L, I, 2005-12-20; R, M, JP)
JP-FI-CLASS: H04R1/10.104C
JP-FI-CLASS: H04R1/10.104E
JP-FI-CLASS: G10K15/02
JP-FI-CLASS: H04M11/08
JP-F-Term: 5D005/BB11
JP-F-Term: 5D005/BB14
JP-F-Term: 5K101/KK18
JP-F-Term: 5K101/LL12
JP-F-Term: 5K101/MM07

JP-F-Term: 5K101/NN12
JP-F-Term: 5K101/NN21

Patent References Cited-Forward:

Publication Number
JP2010281688A
WO2006066457A1

English Description:

0001 :
[Belongs to the technical field of the invention]
The present invention, the voice information by radio communication after received and stored in a memory means, storage means for reading out the information from the radio communication terminal device equipped with player.
0002 :
Prior art:
The music on the Internet server voice information from wireless communication terminal device already music distribution service. The figure shows a system configuration of a conventional music distribution system in fig. 13. The Internet 1, music information into a digital music distribution server 2 is connected. Furthermore, with respect to the music distribution server 2, music distribution terminal device 900 is a base station 3, portable telephone network 4, gateway 5, Internet 1 via the access. The music distribution terminal device 900, and the wireless communication means 902 in the casing 901, and ten key entry means 903, and a display means 904, and a storage means 905, the casing 901 is used by inserting the ear doorphone 906.
0003 :
The key input means 903 music distribution terminal device 900 according to the needs of the music and access URL is input, and a cellular phone network 4 via the Internet 1 can communicate and music distribution server 2, music distribution server 2 from a distribution menue music distribution terminal device 900 looking at the display means 904, delivery is desired, the key input music contents can be selected. The music distribution server 2, the content of the selected voice information read from the database (not shown) is transmitted to the music distribution terminal device 900. The music distribution terminal device 900 the transmitted audio information stored in the storage means 905. The end of the delivery and music, voice information is read out from the memory means 905 is, ear outputs doorphone 906.
0004 :
The conventional music distribution terminal device 900, using the key input means 903 and display means 904 music distribution comprises, music downloaded information reproducing doorphone ear or headphones. The download operation, including operation music, character display of the other menu since it is required to repeat the operation, and a display means of certain sizes, certain sizes and of requiring a key input means 903. Therefore, music distribution terminal device 900 is bulky, or when carried by the pocket must be put in the bag. Furthermore, (for example, patent document 1, patent document 2) doorphone code is also difficult to handle the entangled ear.
0005 :
[Patent document 1]
In the patent Number 2001-28572 publication (page 11 first, fig. 4)
[Patent document 2]
In the patent Number 2002-23768 publication (page 3 first, fig. 1)
0006 :

Problems to be solved by the invention:
The present invention, the drawbacks of the prior art which is convenient to carry, ear without entangling doorphone code, collectively called a feeling of wearing a wearable by radio communication terminal device equipped with player, nothing is put into a pocket or bag without, does not have any sense by hand, such as music, voice information downloaded from the server to reproduce and to first.
0007 :
Furthermore, the operation of the present invention when downloading audio information or status, when reproducing information downloaded state display indicating that the operation state of the user in the field of view of a player to securely provide with wireless communication terminal and second.
0008 :
Means for solving the problems:
In order to solve the first problem, in the present invention the radio communication terminal device equipped with player, and a spectacle frame, and wireless communication means, and control means, and memory means, and operating means, and display means, and processing means, and a battery power source has an ear doorphone, spectacle frame and in wireless communication means, and control means, and memory means, and operating means, and display means, and processing means, the battery power supply is provided, at the end of the spectacle frame doorphone ear is provided, operating means for receiving information from and a command signal is input, by the control means, wireless communication means, receiving the audio information stored audio information, audio information from the operating means for inputting an instruction signal and, under the control of a control means, a voice information stored in the storing means, and read from the ear doorphone output, when receiving a voice information when the display of the state of the display or reproduction by means.
0009 :
With this configuration, which is convenient to carry, ear without entangling the player doorphone code with wireless communication terminal device is realized.
0010 :
Furthermore, the present invention, the tip is provided with a spring-type frame of spectacles doorphone ear having formed as a linear member, and the nose of the spectacle frame 3 by a pair of ear portions doorphone of radio communication terminal device equipped with player supported on the face of a user.
0011 :
By this constitution, a small radio communication terminal device equipped with player, light in weight, easy disengagement from the face, and a sense of collectively as the body firmly, as a device called a wearable sense.
0012 :
The present invention also, in order to solve the second problem, display means mounted to the frame and a glass lens to spectacle lens and illuminating means.
0013 :
With this configuration, when the operation state information is downloaded or voice, music reproducing the operation state display indicating securely within the field of view of the user.
0014 :
The present invention also, spectacle frame and positional relationship of eyeglass lens, lens on a spectacle frame as a positional relation, spectacle frame is provided with an illumination means in whichahappropriate cast from a lens of eyeglasses.
0015 :
By using this configuration, human eyes are views looking on lower than that is easily, reliably by a user in the field of view of the display state is displayed on a player with wireless communication terminal device is realized.
0016 :

Embodiments of the invention:
(Embodiment 1)
A first embodiment of present invention as 1, and the explanation below drawing. Fig. 1 a, 1 of the first embodiment of the present invention related to using wireless communication terminal device equipped with player 6 shows a system configuration diagram of a music distribution system. The present invention, already described in fig. 13 of a conventional music distribution system instead of music distribution terminal 900, radio communication terminal device equipped with player 6 is used, the same part of the system components of the same numbrs, explanation is omitted. The present invention of radio communication terminal device equipped with player 6, base station 3, portable telephone network 4, gateway 5 and, via the Internet 1 accesses the server music 2, voice information is downloaded. In fig. 2 and fig. 3, radio communication terminal device equipped with player 6 mounted on a user's face 60 of the diagram, and when used, the radio communication terminal device equipped with player 6 fig. 4 cut in the direction of a horizontal cross-sectional diagram, fig. 5 the radio communication terminal device equipped with player 6 showing a front view.
0017 :
From fig. 2 to fig. 5, as shown, the player with wireless communication terminal 6, and having a shape of generally glasses, glass lens 10 is integrally formed to the right and left of the left and right under the spectacle frame 20, 21 is mounted extends. Spectacle frame 20, 21 respectively face the end faces 30, 31 as a nose, the nose 30, 31 on the lower side and the opposite side which is curved inwardly to form the wire spring 22, 23 made of a metal having a spring property embedded therein is formed as a linear temple, doorphone ear 40, 41 is provided at the tip. In the state not attached to face a spectacle frame 20, 21 mounted on the end of a section of each of a pair of temple doorphone ear 40, 41 is mounted so as to be smaller than an interval of human ears, the spectacle frame 20, 21 of the nose 30, 31 and the distance of a human doorphone ear 40, 41 and the mounting surface of the ear hole transnasal formed so as to become shorter than the distance.
0018 :
Radio communication terminal device equipped with player 6 when worn on the face, by widening the spectacle frame 20, 21. Figs. 2, 3 as, at the user's face 60, radio communication terminal device equipped with player 6 of a spectacle frame 20, 21 of the right and left sides of the tip of the fitting earhole doorphone ear 40, 41, 30, 31 on the nose against the nose. Spectacle frame 20, 21, especially when the temple portion for face mounting can be spread, and towards the face 60, a force in the right direction. Furthermore, the nose section 30, 31 and the face 60 doorphone ear 40, 41 are held in a longitudinal direction. Therefore, as shown in fig. 3 the size of the user's face 60 is somewhat large, even if small, radio communication terminal device equipped with player 6 the spectacle frame 20, 21 of the temple portion is deformed by the particular user's face 60 of the size of the fitting.
0019 :
Spectacle frame embedded in a metallic coil springs 22, 23 are used as the antenna of the radio communication means. Furthermore, on the outer surface of the spectacle frame 20, 21 as an operating means, and a selection key 100, is provided with a key 101, selection key 100 and a key 101, or both are simultaneously depressed, whereby various operation instruction signal input.
0020 :
In this way, the player with wireless communication terminal device 6 can be put on the face, the so-called collectively as a wearable device can be mounted, and which is convenient to carry, ear without entangling of friendly doorphone code.
0021 :
Fig. 6 a, 1 of the first embodiment of the present invention such radio communication terminal device equipped with player 6 shown as a block diagram of an internal configuration. Fig. 6 and, in the spectacle frame 20, 21, and wireless communication means 70, and a control

means 80, and memory means 90, and the voice processing means 93, and operating means for selecting key 100, and key 101, and a display means 110,111, battery power supply 120 is provided, the spectacle frame 20, 21 at the tip of each of the temple portions 22, 23 is provided with a tip doorphone ear 40, 41. The particular display means 110,111, spectacle frame 20, 21 the LED130, 131,132,133 are arranged toward the lens 10, so as to irradiate a spectacle lens 10. Each of these means, are connected by a bus line 200, serving as an operating means for selecting key 100, key 101 by the input from the, control means 80 as a radio communication terminal device equipped with an audio player is to operate.

0022 :

In other words, the operating means by using the selected key 100, key 101, audio information and a receiver for receiving a command signal is input, under the control of the control means 80, an antenna, a radio communication means 70 serves as shown in fig. 1 from the temple portions 22, 23, by accessing the server music 2, music information is downloaded. The voice processing means 93, music distribution server 2 from the radio signal received by the voice signal, and the voice processing is performed, voice information is stored in the memory means 90. Operation means selecting key 100 using a key 101 and voice information, and an instruction input signal is input, under the control of the control means 80, the voice information stored in the memory means 90 reads doorphone ear 40, 41. Furthermore, voice information or at the time when, in the display means 110,111 LED130, 131,132,133 irradiating lens of eyeglasses with a lighting, such as light LED130.

0023 :

A basic operation is explained using the selection keys 100, key 101 is operated by means of radio communication terminal device equipped with player 6 of the present invention. In the present invention the player of a radio communication terminal device equipped with 6 the selection key 100 and a key 101 is provided on each surface of the spectacle frame 20, 21. Radio communication terminal device equipped with player 6 face 60 of the user in radio communication terminal device equipped with player 6 in a mounted state, with both hands, and simultaneously pressing selected keys 100 by key 101, power is turned on, can be turned. Furthermore, right-hand and pushes the select key 100, which can be selected on the menu doorphone output ear is read out from the memory means 90. After that, within a predetermined period of time and the selection key 100 is depressed, the selected menu is read. Menu is read out, and a predetermined time is elapsed that menu is selected by the handle thereof. Furthermore, even when the left hand key 101 is depressed so as to determine the menu.

0024 :

Fig. 7 in, selection key 100, key 101 is used as a flowchart showing a basic operation process. Fig. 7 in, (step S2) and (step S1 for controlling the operation of a timer), a power source (not shown) and simultaneously pushes the select key 100 turns on with both hands, key 101. Selection key 100 is pressed (step S3) doorphone ear 40, 41 and can be selected from the menu (step S4) is output. Determining key 101 is pressed (step S5) uncutted, before the time-out (step S6), and the selection keys 100 is depressed, the next menu are successively read out. A time-out, and key 101 is pressed, is read as a menu is selected (step S7) is determined. Furthermore, the determined (step S8) to start the operation of the item. The selection key 100 during operation and when the key 101 are pressed simultaneously (step S9), (step S10) to stop the operation. Again, the selection keys 100 and key 101 are pushed simultaneously (step S11) when the, power supply is turned off (step S12). The selection key 100 during operation and when the key 101 are pushed simultaneously, without turning off the power source to continue its operation.

0025 :

Fig. 8 the, present invention music player with wireless communication terminal 6 when downloading information as a flowchart showing an operation procedure. Also in this case, in order to simplify the explanation of the player with wireless communication terminal device 6 in the memory means 90, previously stores a URL of music distribution server as described.

0026 :
First of all, radio communication terminal device equipped with player 6 serving as an operating means for selecting key 100 of key 101 are depressed simultaneously with both hands, and the power supply is turned on, the battery power supply 120 and control means 80 from wireless communication means 70 for supplying a power to, display means 110 as a lighting means of the lighting of the pilot lamp LED130 (step S20). Next, operation means can be selected by pressing the menu selection key 100 successively read, selecting a " URL?? " While the message is output, whether the predetermined time passes, by pressing the key 101, a URL (step S21) for selecting operation is started. The selection of the URL, operating means 100 within a predetermined time sequentially and successively by pushing the URL, ear doorphone capable of switching the voice output. Furthermore, each selection key 100 is depressed, LED131 lighting means, by adding lighting periord 132,133, capable of selecting one of any number of URL to visually check (step S22) is. In the state of outputting a URL, whether the predetermined time passes, a key 101 (step S24) pushes the URL is determined. URL is determined and, control means 80 by wireless communication means 70, spectacle frame temple portions and antenna 22, 23 from, base station 3, portable telephone network 4, gateway 5, Internet 1 via a, music distribution server 2 (step S25) to access.
0027 :
The player with wireless communication terminal 6, music distribution server 2 receiving the information from the music, voice output ear doorphone 40, 41. For example, a music distribution server, a classic, popular, pops of about 3 until one of the popular jenre best 5 explained as being capable of delivering and curvature, which can distribute the category name is " 1. a classic, 2. popular, 3. pops. " Successively. Furthermore, to select a desired jenre and distribute the music is sequentially outputted (step S26), as explained already protrct selection key 100 using a key 101 and, (step S27) for determining a desired music. In this way, the music determined (step S28) information is downloaded. 1 after downloading of one curvature, the curvature of the following (step S29) for down, step S26 to return, by the operation of step S28 to the curvature of the other. When finished, operating means of selection keys 100 and simultaneously push key 101 (step S29) stopping its operation, and to simultaneously select key 100 again determining key 101 (step S30) pushes the power supply is turned.
0028 :
Next, stored in the memory means 90 by downloading the music information, operation is explained. Fig. 9 a, radio communication terminal device equipped with player 6 when the voice information as a flowchart showing an operation procedure. First of all, radio communication terminal device equipped with player 6 and operating means of selection keys 100 and simultaneously pressing key 101, battery power supply 120 and control means 80 radio means 70 is supplied, display means 110 of the illuminating means in the pilot lamp is lit as LED130 fig. 8 (step S31) and is the same as the flowchart. Next, a select key 100" music reproduction start?? " Menue doorphone reads output to the ear, or time out, by pressing the key 101, (step S32) and starts a music reproducing mode. In a step S33 and (selection key 100 is depressed), the music doorphone ear. Furthermore, each selection key 100 is depressed, a music reproducing audio output doorphone ear 40, 41, LED131 lighting means, by adding lighting periord 132,133, music or what can be visually confirmed (step S34) is. A time-out or pushing the key 101, (step S35) establishes a curvature. The control means of the selected and stored in a storage means (step S36) playlist. In playlist and, further adding a music reproducing a picture is displayed is input, and the selected key 100 is pressed within a predetermined time, return スップ S33, step S36 until operated by, a curvature is selected. At a step S37, and the time out, a curvature that is not added, playlist order is stored (step S38) reproduce music.
0029 :
The music, voice output doorphone ear 40, 41, of the music reproducing the number corresponding to the number of the lighting means is lit. Moreover, the beginning of the music reproducing the curvature but of the number corresponding to the number of the illuminating

means is turned on, the color is changed in accordance with the music. When the classic listening, the color of the light irradiating lens changes in color and sepia, movie scene is seen through a glass lens to see oldness changes. When the curvature of the major listening to bright yellow or red by flashing light of warm, listening to music when the schemes of, or white light of pale and such slowly changing 水色 , display contents for music reproduction by automatic selection, listening to music can be a venefit ~~~ mood. In the playing of the music playlist and end of all, operating means within a predetermined time as it does not operate the select key 100 and the power supply is turned. Furthermore, all of the music is completed within a predetermined time and selecting key 100 is operated, it returns to step S33, regeneration can is selected.

0030 :

Furthermore, in the above embodiment, the Internet 1 of voice information is downloaded from the server music 2 as music distribution terminal device, radio communication terminal device equipped with player 6 which explain, music information transmitted by radio network is not limited to this, other wireless local area network wireless communication with music information from the player is transmitted to the terminal system.

0031 :

Furthermore, the player receives wireless communication terminal with the voice information, in addition to the information of the music, music, the information of the curvature or a curvature of the accompanying description of the voice composers, surer, recites a loudspeaker, a document reading, rhythm, downloaded for guiding the operation procedure of sound.

0032 :

(Embodiment 2)

Next, a second embodiment of the present invention the player 2 with wireless communication terminal device are described. 1 of the first embodiment, spectacle frame 20, 21 embedded in a metal-made wire spring 22, 23 is used as an antenna of the radio communication means, 2 of the first embodiment of the present invention related to the player with wireless communication terminal 62, a spectacle frame 20, 21 so as to cross the antenna 132 standing structure.

0033 :

Fig. 10 of the first embodiment of the present invention in a 2 related to the external view of the player with wireless communication terminal 62. Furthermore, fig. 11 the radio communication terminal device equipped with player 62 attached to the user's face 60 showing the use state. In fig. 10 and fig. 11, spectacle frame 20 to 1 to indicate a standing state antenna 132, from each of the right and left of the spectacle frame 20, 21 can be erected antenna 2 meter. In this way, the antenna is erected, by separating from the user's face 60, which can enhance the sensitivity of the antenna. 2 shown in fig. 10 and fig. 11 of the first embodiment, antenna 132 rotatably mounted on a spectacle frame 20, and at the time of use so as to intersect esterblish glasses frame. Furthermore, antenna 132 as a telescopic antenna.

0034 :

(Embodiment 3)

Next, a second embodiment of the present invention related to 3 equipped with player wireless communication terminal 63 are described. Fig. 12 the, 3 of the first embodiment of the present invention the player with wireless communication terminal 63 in a museum or exhibition halls using a system configuration diagram of a sound distribution system for the observer. This is demonstrated in the sound distribution system for exhibition halls, one set in the area of the short-range wireless communication such as a Bluetooth local area network using 70 for sound distribution server submitted 71 is connected, a plurality of base station 72, 73, 74, 75 are assigned as a local area network 70 of base stations. Furthermore, the player with wireless communication terminal 63 carrying a base station 72 when the observer approaches, base station 72 for the observer approaches the voice information automatically distributed from sound delivery server for the observer 71, when the observer approaches the base station 73 if, for the observer approaches the base station 73 automatically delivers the voice infor-

mation. Below, in the same manner in accordance with the movement of the observer, base station 74 for the observer approaches the voice information, base station 75 approaches the voice information automatically in order for the observer. The observer, tour passage and walks, the exhibited articles can be heard by the receiver.
0035 :
3 of the first embodiment, in a museum display information such as not only or exhibition halls, tour route guidance navigation information for the player with wireless communication terminal 63 and delivering it to the observer can also be guided. At this time, the display means when bent to the right on the right of the glass lens of the illuminating means is turned on and off, and, when bent to the left of the left end of the spectacle lens by flashing lighting means, in addition to the voice information visitors, visual display means is used for induction.
0036 :
[Effect of the invention]
The present invention according to the radio communication terminal device equipped with player, spectacle frame and in wireless communication means, and control means, and memory means, and operating means, and display means, and processing means, the battery power supply is provided, at the end of the spectacle frame doorphone ear is provided, operating means for receiving the audio information and a command signal is input, by the control means, wireless communication means, receiving the audio information stored audio information, operating means audio information and a, by the control means, a voice information stored in the storing means, and read from the ear doorphone output, when receiving a voice information when the display of the state of the display means or by performing, convenient to carry, ear without entangling doorphone code, via the Internet provider in music, voice information can be downloaded player with wireless communication terminal device can be obtained.
0037 :
Furthermore, the present invention, a spectacle frame having spring properties is formed as a linear member, and the nose of the spectacle frame 3 with a pair of ear portions doorphone of players due to radio communication terminal device mounted on the face of a user by, player wearing the radio communication terminal device equipped with a sense of collectively, capable of being used in a so-called wearable sense.
0038 :
The present invention also, a plurality of illumination means as display means are incorporated in the spectacle frame, a plurality of illuminating means to selectively or simultaneously to the light irradiated to the eyeglass lens, or the operation state when downloading audio information, which indicates the operation state at the time of reproducing the state display within the visual field of a user can be confirmed.
Brief description of the drawings:
[Fig. 1] 1 of the first embodiment of the present invention applied to a music player using wireless communication with the distribution system configuration diagram
[Fig. 2] 1 of the first embodiment of the present invention such a player with a wireless communication terminal of the user's face when installed on a used state diagram
[Fig. 3] 1 of the first embodiment of the present invention such a player with a wireless communication terminal of the user's face when installed on a used state diagram
[Fig. 4] 1 of the first embodiment of the present invention applied to a cross-sectional diagram of a radio communication terminal device equipped with player
[Fig. 5] 1 of the first embodiment of the present invention with the front elevation of such a player
[Fig. 6] 1 of the first embodiment of the present invention applied to a block diagram of the radio communication terminal device equipped with player
[Fig. 7] 1 of the first embodiment of the present invention with such a player of flowchart of operation procedure by operating means

[Fig. 8] 1 of the first embodiment of the present invention such radio communication terminal device equipped with player of the flowchart of the operation procedure of downloading information
[Fig. 9] 1 of the first embodiment of the present invention with such a player during reproduction of audio information of the operation procedure of the flowchart
[Fig. 10] 2 of the first embodiment of the present invention with such a player perspective diagram of radio communication terminal device
[Fig. 11] 2 of the first embodiment of the present invention such a player with a wireless communication terminal of the user's face when installed on a used state diagram
[Fig. 12] 3 of the first embodiment of the present invention of the player using radio communication terminal device equipped with a configuration diagram for visitors sound distribution system
[Fig. 13] system configuration diagram of a conventional music distribution system
Description of the symbols:
1 Internet
2 music distribution server
3 gateway
4 portable telephone network
5 base station
6 radio communication terminal device equipped with player
10 spectacle lens
20, 21 spectacle frame
22, 23 the temple part
30, 31 the nose
40, 41 ear doorphone
70 wireless communication means
80 control means
90 storage means
93 audio processing means
100 selection key
101 key
110,111 display means
120 battery power supply
130,131,132,133 LED

Number of Claims: 4

ENGLISH CLAIMS:

The mold frame and glasses, and wireless communication means, and control means, and memory means, and operating means, and display means, and processing means, and having a battery power supply doorphone ear, the eyeglass frame and the wireless communication means, and the control means, and the storage means, and the operating means, and the display means, and the voice processing means, the battery power supply is provided, the spectacle frame doorphone is provided at the fore end of the ear, the operation means for receiving information from and to input a signal indication, controlled by the control means, the wireless communication means, receives voice information is stored in the storage means, the operation means for reproducing audio information from and reproduction instruction signal is inputted, the control of the control means, the voice information is read from the storing means and outputting a doorphone ear, when receiving a voice information or the display means when the display of the state is carried out in the radio communication terminal device equipped with player.

The tip is provided with an ear doorphone glasses frame and a linear member having spring properties is formed as described in claim 1 and a radio communication terminal device equipped with player.

The display means, attached to the eyeglass frame and glass lens, the glass lens, an illumination means described in claim 1 is characterized by a player and a wireless communication terminal device.

The eyeglass frame and the display means of the positional relation of the spectacles, the spectacles frame on the lens of eyeglasses placed in as a positional relation, the glass lens from below the illuminating means so described in claim 3 is characterized in that a player and a wireless communication terminal device.

1392BD

********** Print Completed **********

Time of Request: Tuesday, October 23, 2012 09:36:12

Print Number: 1827:376760226
Number of Lines: 301
Number of Pages:

Send To: LEES, JOHN
MEWBURN ELLIS LLP
BRIDGEWATER HOUSE
60 WHITWORTH ST

(12) INTERNATIONAL APPLICATION PUBLISHED UNDER THE PATENT COOPERATION TREATY (PCT)

(19) World Intellectual Property Organization
International Bureau

(43) International Publication Date
4 May 2006 (04.05.2006)

PCT

(10) International Publication Number
WO 2006/047724 A2

(51) International Patent Classification:
H01R 11/00 (2006.01)

(21) International Application Number:
PCT/US2005/038877

(22) International Filing Date: 26 October 2005 (26.10.2005)

(25) Filing Language: English

(26) Publication Language: English

(30) Priority Data:
60/622,874 26 October 2004 (26.10.2004) US

(71) Applicant *(for all designated States except US)*: **LOGITECH EUROPE S.A.** [CH/CH]; Moulin Du Choc, CH-1122 Romanel-sur-Morges (CH).

(72) Inventors; and

(75) Inventors/Applicants *(for US only)*: **MAYETTE, Donald** [US/US]; 1499 SE Tech Center Drive, Suite 350, Vancouver, WA 98683 (US). **JACOBSON, Robert** [US/US]; 1499 SE Tech Center Drive, Suite 350, Vancouver, WA 98683 (US).

(74) Agent: **DAWSON, John, R.**; IPSOLON LLP, 805 SW Broadway #2740, Portland, OR 97205 (US).

(81) Designated States *(unless otherwise indicated, for every kind of national protection available)*: AE, AG, AL, AM, AT, AU, AZ, BA, BB, BG, BR, BW, BY, BZ, CA, CH, CN, CO, CR, CU, CZ, DE, DK, DM, DZ, EC, EE, EG, ES, FI, GB, GD, GE, GH, GM, HR, HU, ID, IL, IN, IS, JP, KE, KG, KM, KP, KR, KZ, LC, LK, LR, LS, LT, LU, LV, LY, MA, MD, MG, MK, MN, MW, MX, MZ, NA, NG, NI, NO, NZ, OM, PG, PH, PL, PT, RO, RU, SC, SD, SE, SG, SK, SL, SM, SY, TJ, TM, TN, TR, TT, TZ, UA, UG, US, UZ, VC, VN, YU, ZA, ZM, ZW.

(84) Designated States *(unless otherwise indicated, for every kind of regional protection available)*: ARIPO (BW, GH, GM, KE, LS, MW, MZ, NA, SD, SL, SZ, TZ, UG, ZM, ZW), Eurasian (AM, AZ, BY, KG, KZ, MD, RU, TJ, TM), European (AT, BE, BG, CH, CY, CZ, DE, DK, EE, ES, FI, FR, GB, GR, HU, IE, IS, IT, LT, LU, LV, MC, NL, PL, PT, RO, SE, SI, SK, TR), OAPI (BF, BJ, CF, CG, CI, CM, GA, GN, GQ, GW, ML, MR, NE, SN, TD, TG).

Published:
— *without international search report and to be republished upon receipt of that report*

For two-letter codes and other abbreviations, refer to the "Guidance Notes on Codes and Abbreviations" appearing at the beginning of each regular issue of the PCT Gazette.

(54) Title: MULTI-POSITION CONNECTOR FOR PERSONAL AUDIO SET

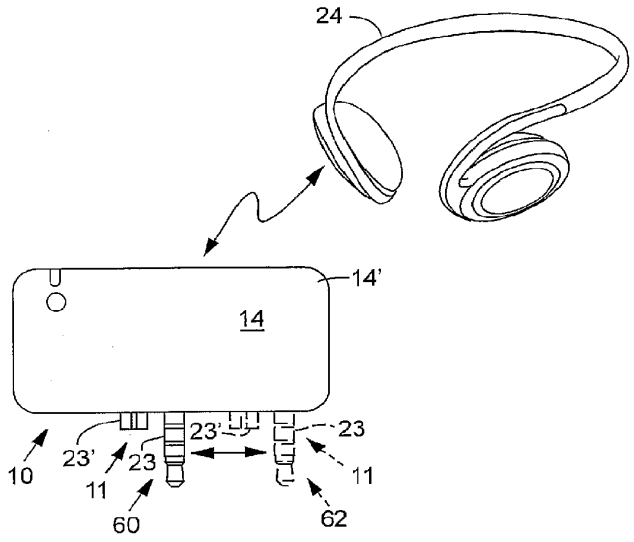

(57) Abstract: A multi-position connector is disclosed that allows a personal audio device to be operable secured to a variety of different personal audio sets. In a disclosed embodiment, the connector is slidably secured to a frame, thereby allowing the connector's position relative to the frame to be adjusted as needed so as to properly engage mating connectors on a particular personal audio set. A resistive détente is preferably provided at key locations along the frame so as to hold the connector at a predetermined position relative to the frame.

WO 2006/047724 A2

MULTI-POSITION CONNECTOR FOR PERSONAL AUDIO SET

Cross Reference to Related Applications

This application claims priority to U.S. provisional patent application serial number 60/622,874 filed on October 26, 2004.

Field of the Invention

The present invention relates to a connector preferably for a personal audio set that may be positioned to at least a plurality of different locations.

Background of the Invention

Personal audio devices, commonly known as headphones, earphones, headsets, and the like, are gaining in popularity. The typical personal audio device includes a frame containing an earphone that is usually positioned over or in a wearer's ear. In cases where the audio-set is a headset, a microphone is also typically positioned near the wearer's mouth.

Personal audio devices are often sold as after-market items for use with audio sets, such as MP3 players, CD players, cell phones, and the like, that consumers have purchased separately. These personal audio sets usually include a jack or connector that allow for connection of personal audio devices such as headphones and the like. Usually, different manufacturers of a type of audio set have different shaped and/or configured jacks. In addition, even for a given manufacturer of an audio set having a common jack design

for all of its products, the location of that jack on the case may be different between different products of that manufacturer. Accordingly, a manufacturer of after-market products for use on personal audio sets and the like, must design and produce different after-market products, one for each particular audio set to which it is intended to be used.

For example, the Apple Corporation of Cupertino, California offers at least two different personal audio sets. One is sold under the trademark IPOD and the other is sold under the trademark IPOD MINI. They are both audio sets commonly known as MP3 players, but they differ in their physical size and the amount and type of features they offer. Both have the same sized and shaped remote port and headphone jack, each of which is operable using the same or very similar electrical circuitry and the like. However, the physical location of this port and jack on these products differ. The personal audio device sold under the trademark IPOD has its remote port and headphone jack in the center of the top side of the device, and the personal audio device sold under the trademark IPOD MINI has its remote port and headphone jack toward the right side of the top side of the device.

Accordingly, if a manufacturer desires to provide an after-market product that engages the remote port and/or headphone jacks on both the IPOD and the IPOD MINI audio sets, it must make and sell two different audio device-engaging structures. One structure physically aligns the connectors with the IPOD and a separate structure physically aligns the connectors with the IPOD MINI. These two separate structures increase the costs of producing the after market product.

Moreover, should the manufacturer of the personal audio set change the location of its ports and jacks, the after-market manufacturer must necessarily change its after market products accordingly.

Summary of the Invention

Accordingly, despite the available improvements offered by after-market products for use with personal audio sets, there remains a need for a cost-effective and common connector design that allows the after-market product to be operably secured to a variety of different personal audio sets. In addition to other benefits that will become apparent in the following disclosure, the present invention fulfills these needs.

The present invention is a multi-position connector for a personal audio set. In a preferred embodiment, the connector is slidably secured to a frame, thereby allowing the connector's position relative to the frame to be adjusted as needed so as to properly engage mating connectors on a particular personal audio set.

A resistive detent is preferably provided at key locations along the frame so as to hold the connector at a predetermined position relative to the frame.

Brief Description of the Drawings

Fig. 1 is a top view of a multi-positionable connector for a personal audio device having a movable connector portion extending therefrom in accordance with an embodiment of the present invention showing a possible first position of the connector portion in solid lines and a possible second position of the connector portion in hidden lines.

Fig. 2A is a front view of the connector of Fig. 1 with the connector portion in the possible first position.

Fig. 2B is a front view of the connector of Fig 1 with the connector portion in a possible second position and showing the possible first position of the connector portion in broken lines.

Fig. 3 is an exploded, isometric view of the connector of Fig. 1 showing the connector portion in the first possible position of Fig. 1.

Fig. 4 is an exploded, isometric view of the connector of Fig. 1, showing a detailed view of a possible connector portion having shuttle

assembly and resistive detent in accordance with an embodiment of the present invention.

Fig. 5A shows a top view of the connector in Fig. 1 with the connector portion in the second possible position.

Fig. 5B shows a front view of the connector of Fig. 5A.

Fig. 5C is an exploded, isometric view of the connector of Fig. 5A showing the connector portion in the second possible position of Fig. 1.

Fig. 5D is an exploded, isometric view of the connector of Fig. 5A, showing a detailed view of the shuttle assembly in Fig. 4 in accordance with an embodiment of the present invention.

Fig. 6 shows the connector of Fig. 1 with the connector portion in the possible first position and operably secured to a first personal audio set.

Fig. 7 shows the connector of Fig. 1 with the connector portion in the second position and operably secured to a second personal audio set having mating connectors in a different location that the location of the connectors on the first personal audio set of Fig. 6.

Detailed Description of Preferred Embodiments

A multi-position connector 10 for connecting an auxiliary device, such as a wireless headset 24, to a personal audio set 12 (Figs. 6 & 7) is disclosed in Figs. 1-7.

Preferably, the multi-position connector 10 has a connector portion 11 that is operably secured within a frame 14. The connector portion 11 is sized and shaped to operably engage one or more mating connector(s) 20 on the personal audio set 12 or the like. For example, electrical circuitry 22 for a dongle 14' for operating a wireless headset 24 is contained within the frame 14 and in electrical communication with one or more jack connectors 23, 23' secured within the connector portion 11. Each jack connector 23, 23' is sized to operably connect with an auxiliary device jack 20' (Figs. 6 & 7) and/or remote port 20" (Figs. 6 & 7) of the personal audio set 12.

The connector portion 11 is preferably slidably secured to the frame 14. For example and as best shown in Figs. 4 and 5D, the connector portion 11 is received within a shuttle assembly 30 that travels along a mating channel 32 within the frame 14 thereby allowing the connector portion 11 to slide along the channel. 32

More preferably, a resistive detent 40 is provided so as to hold the connector portion 11 at a predetermined position relative to the frame 14. For example, as best shown in Fig. 4, the resistive detent 40 can include a sliding member 42 biased to extend into the channel 32. Such biasing structure 44 preferably includes a spring 46 or the like. The engaging surface 48 of the sliding member is preferably angled as shown so as to urge the shuttle assembly 30 toward one end 50a, 50b of the channel 32, thereby holding the shuttle assembly 30 in place in either a first position 60 (shown in Figs. 1, 2A, 3, 4, & 6) or a second position 62 (shown in Fig. 2B, 5A-D, and 7).

Since the position of the connector portion 11 relative to the frame 14 is adjustable, the connector 10 can be used on different personal audio sets. For example, as shown in Figs. 6 & 7, the connector 10 can be connected to a conventional IPOD 12' personal audio device by placing the connector portion 11 in its first position 60 and connecting the connector portion 11 to the mating connectors on the IPOD 12' personal audio device.

Should a user desire to use the connector 10 on an audio device having a different location for its connectors, such as on an IPOD MINI 12" personal audio device shown in Fig. 8, the user slides the connector portion 11 to its second position 62 as shown in Fig. 8, thereby aligning the connector portion 11 with the mating connectors on the IPOD MINI 12".

Accordingly, the same connector 10 can be used with a variety of different personal audio sets. Moreover, the adjustability of the connector allows a manufacturer of after market products and the like to easily adjust the location of the connector should the manufacturer of a personal audio device move the physical position of a mating connector in future models or the like.

Having described and illustrated the principles of our invention with reference to a preferred embodiment thereof, it will be apparent that the invention can be modified in arrangement and detail without departing from such principles. In view of the many possible embodiments to which the principles may be put, it should be recognized that the detailed embodiment is illustrative only and should not be taken as limiting the scope of our invention. For example, the disclosed embodiment describes the personal audio set being an MP3 player, and the connector 10 being a wireless dongle for a headset, the principles of this invention apply equally well with other types of personal audio sets, such as cell-phones, CD players, cassette players, and the like and with both wired and wireless after-market products connected to the connector 10. Accordingly, we claim as our invention all such modifications as may come within the scope and spirit of the following claims and equivalents thereto.

CLAIMS

1. A multi-positionable connector for operably connecting an auxiliary device to a jack on a personal audio set, the connector having:

a frame,

a connector portion operably secured to the frame, said connector portion moveable with respect to the frame to define a first position relative to the frame and at least a second position relative to the frame; and,

a jack connector secured to the connector portion for operably engaging the auxiliary jack on the personal audio set when the connector portion is in at least one of said first portion and said second position, thereby operably connecting the personal audio set to the auxiliary device.

2. The multi-positionable connector of claim 1, wherein said frame includes electrical circuitry received therein for operating said auxiliary device, and said jack connector electrically connects said personal audio set to said electrical circuitry.

3. The multi-positionable connector of claim 1, wherein the personal audio set is an MP3 player.

4. The multi-positionable connector of claim 1, wherein the auxiliary device is a headset.

5. The multi-positionable connector of claim 4, wherein the headset is wirelessly connected to said connector portion.

6. The multi-positionable connector of claim 1, wherein said connector portion is slideably secured to said frame.

7. The multi-positionable connector of claim 1, further including a shuttle slideably secured to said frame and said connector portion is operably secured to said shuttle.

8. The multi-positionable connector of claim 1, further including a resistive detent for biasing said connector portion toward one of said first position and said second position.

9. An auxiliary audio device for connecting to at least a first personal audio set and a second personal audio set, the first and second audio sets each having a case with an auxiliary device connection jack located thereon with each auxiliary device connection jack being located at different locations on each case, said auxiliary device comprising:

a frame;

a connector portion operably secured to the frame, said connector portion moveable with respect to the frame to define a first position relative to the frame and at least a second position relative to the frame;

a jack connector secured to the connector portion for operably engaging, one at a time, the first personal audio set and the second personal audio set;

said jack connector positioned to operably engage the auxiliary device connector jack of the first personal audio set when the connector portion is in said first position; and,

said jack connector positioned to operably engage the auxiliary device connector jack of the second personal audio set when the connector portion is in said second potion.

10. The auxiliary audio device of claim 9, wherein said frame includes electrical circuitry received therein for operating the auxiliary audio device, and said jack connector electrically connects one of said first and second personal audio sets to said electrical circuitry.

11. The auxiliary audio device of claim 9, wherein at least one of said first and second personal audio sets is an MP3 player.

12. The auxiliary audio device of claim 9, wherein said auxiliary audio device is a headset.

13. The auxiliary audio device of claim 12, wherein said headset is wirelessly connected to said connector portion.

14. The auxiliary audio device of claim 9, wherein said connector portion is slideably secured to said frame.

15. The auxiliary audio device of claim 9, further including a shuttle slideably secured to said frame and said connector portion is operably secured to said shuttle.

16. The auxiliary audio device of claim 9, further including a resistive detent for biasing said connector portion toward one of said first position and said second position.

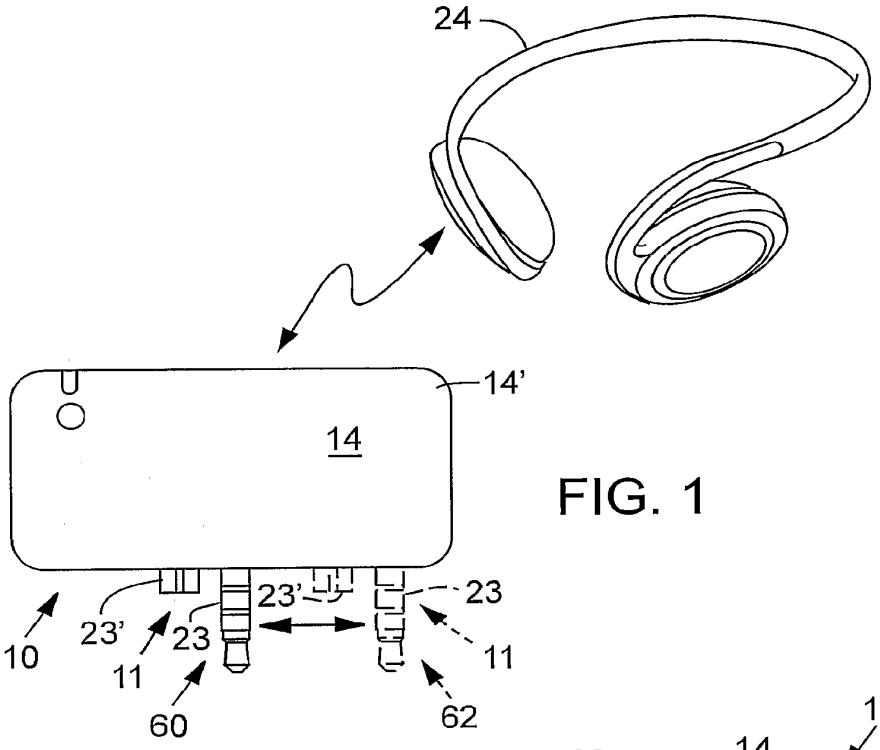

FIG. 1

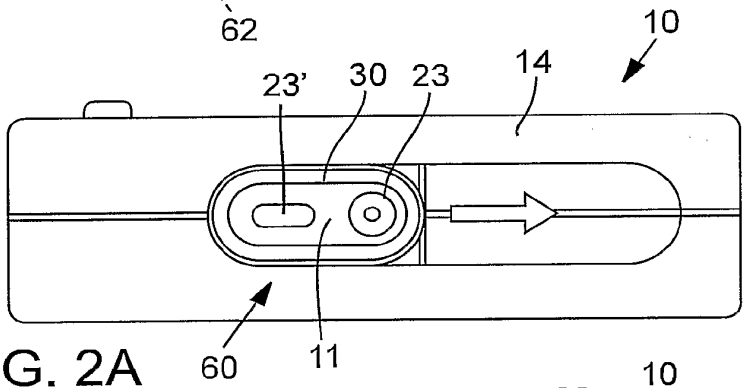

FIG. 2A

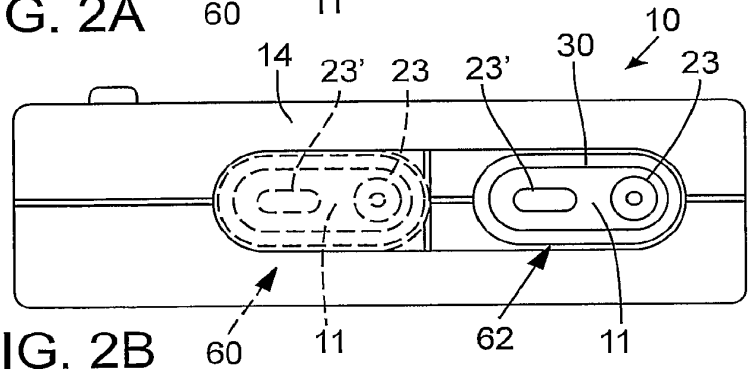

FIG. 2B

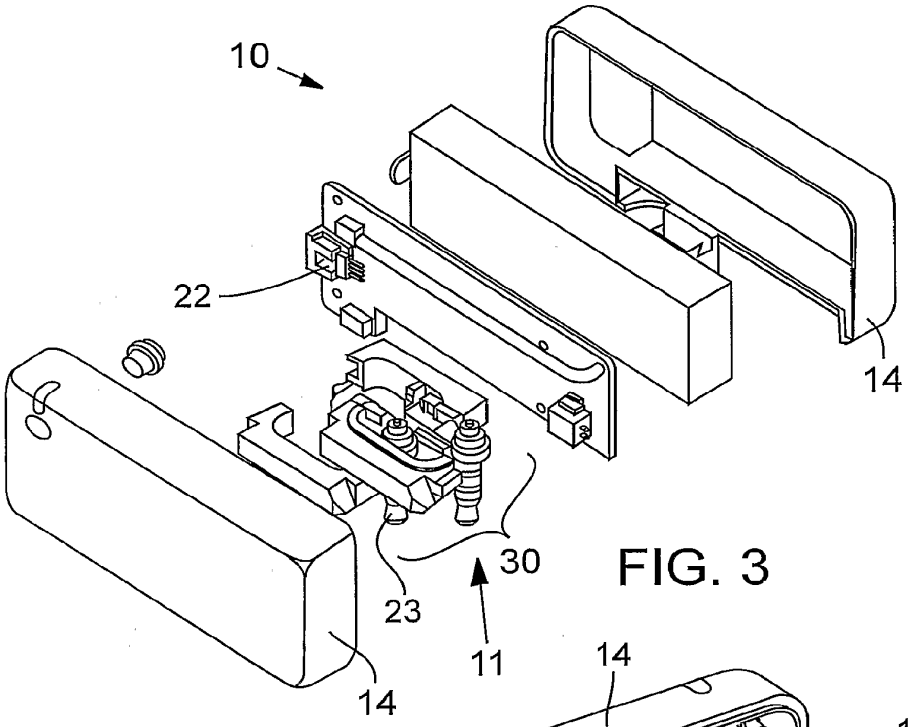

FIG. 3

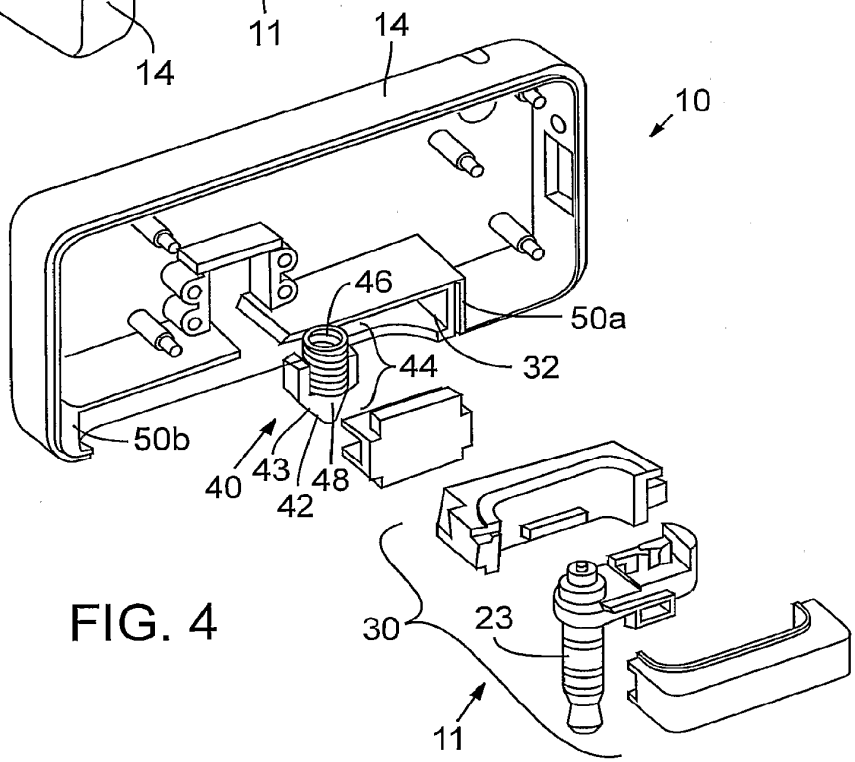

FIG. 4

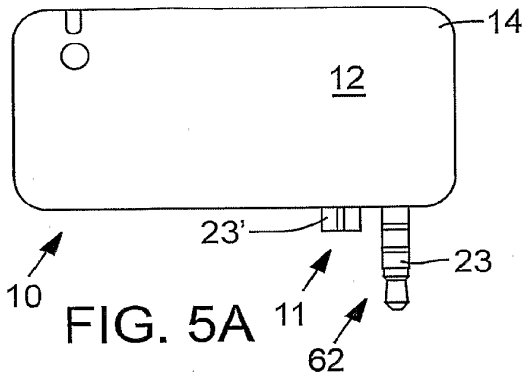

FIG. 5A

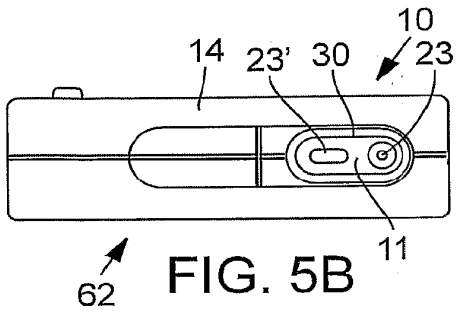

FIG. 5B

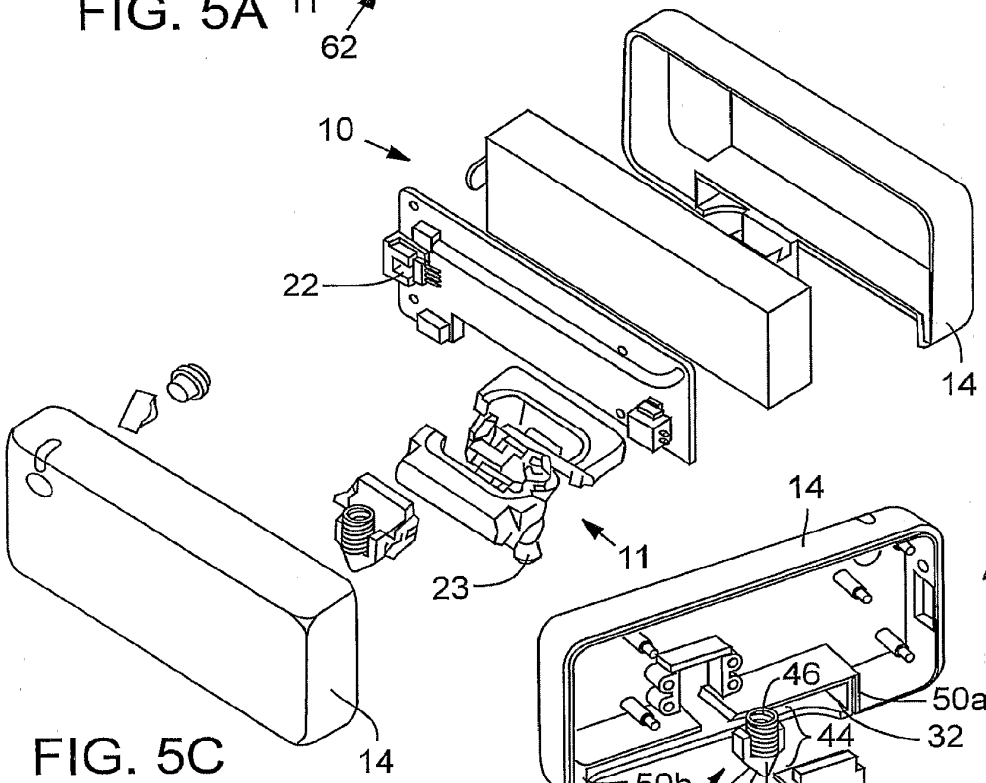

FIG. 5D

4/4

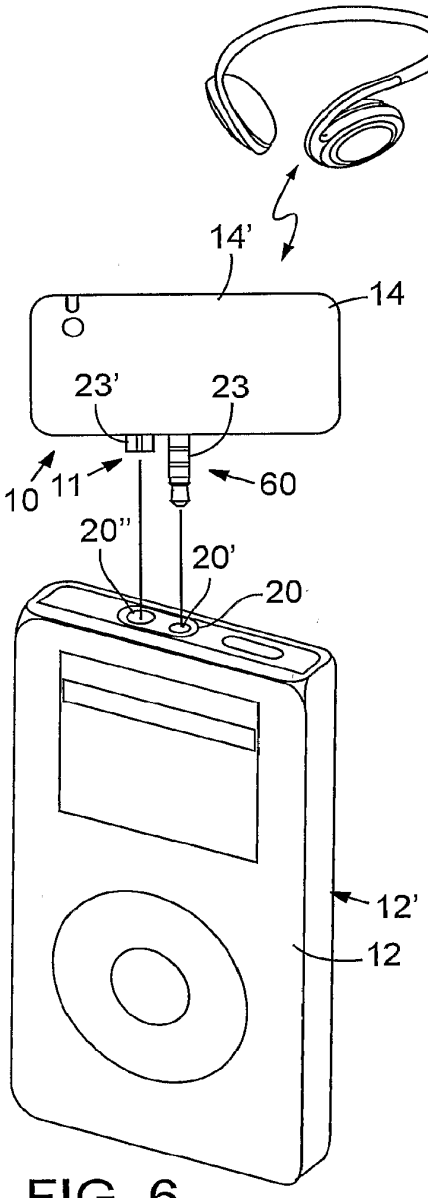
24
14'
14
23'
23
10
11
60
20''
20'
20
12'
12

FIG. 6

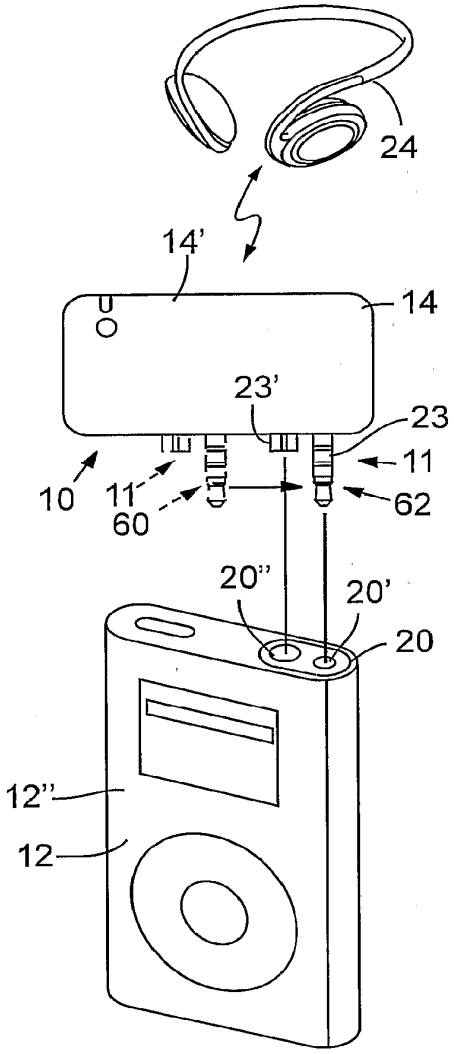
24
14'
14
23'
23
11
10
11
60
62
20''
20'
20
12''
12

FIG. 7

(12) INTERNATIONAL APPLICATION PUBLISHED UNDER THE PATENT COOPERATION TREATY (PCT)

(19) World Intellectual Property Organization
International Bureau

(43) International Publication Date
6 December 2007 (06.12.2007)

PCT

(10) International Publication Number
WO 2007/139578 A1

(51) International Patent Classification:
H04L 29/12 (2006.01)

(21) International Application Number:
PCT/US2006/044877

(22) International Filing Date:
20 November 2006 (20.11.2006)

(25) Filing Language: English

(26) Publication Language: English

(30) Priority Data:
11/421,195 31 May 2006 (31.05.2006) US

(71) Applicant *(for all designated States except US)*: **SONY ERICSSON MOBILE COMMUNICATIONS AB** [SE/SE]; Nya Vattentornet, S-221 88, Lund (SE).

(72) Inventors; and
(75) Inventors/Applicants *(for US only)*: **BLOEBAUM, L.**, **Scott** [US/US]; 103 Creekbury Court, Cary, North Carolina 27519 (US). **LIU, Charles** [US/US]; 105 Woodmark Court, Chapel Hill, 27514 (US).

(74) Agent: **MANNING, Timothy, E.**; Renner, Otto, Boisselle & Sklar, LLP, 1621 Euclid Avenue, 19th Floor, Cleveland, 44115-2191 (US).

(81) Designated States *(unless otherwise indicated, for every kind of national protection available)*: AE, AG, AL, AM, AT, AU, AZ, BA, BB, BG, BR, BW, BY, BZ, CA, CH, CN, CO, CR, CU, CZ, DE, DK, DM, DZ, EC, EE, EG, ES, FI, GB, GD, GE, GH, GM, GT, HN, HR, HU, ID, IL, IN, IS, JP, KE, KG, KM, KN, KP, KR, KZ, LA, LC, LK, LR, LS, LT, LU, LV, LY, MA, MD, MG, MK, MN, MW, MX, MY, MZ, NA, NG, NI, NO, NZ, OM, PG, PH, PL, PT, RO, RS, RU, SC, SD, SE, SG, SK, SL, SM, SV, SY, TJ, TM, TN, TR, TT, TZ, UA, UG, US, UZ, VC, VN, ZA, ZM, ZW.

(84) Designated States *(unless otherwise indicated, for every kind of regional protection available)*: ARIPO (BW, GH, GM, KE, LS, MW, MZ, NA, SD, SL, SZ, TZ, UG, ZM,

[Continued on next page]

(54) Title: SYSTEM AND METHOD FOR MOBILE TELEPHONE AS AUDIO GATEWAY

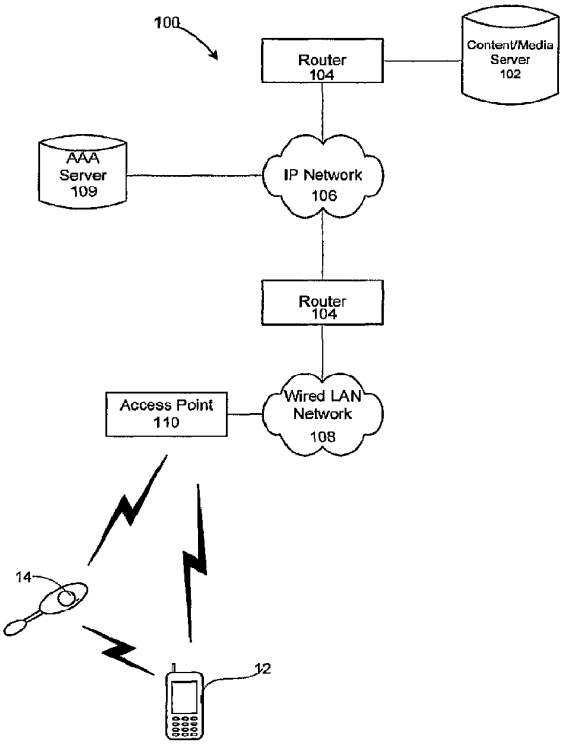

(57) Abstract: Disclosed is a system and method for using a mobile telephone (10) as an audio gateway. In one embodiment, a mobile telephone (12) requests: access to a wireless network (100), wherein the wireless network (100) includes at least one remote server (102) that contains multimedia content. The mobile telephone (12) assigns a subnet internet protocol (IP) address to a rendering device (14). After authenticating the user, the user selects at least one service and/or device associated with the wireless network (100). The streaming audio is then routed to the rendering device (14) based on the assigned subnet IP address.

WO 2007/139578 A1

ZW), Eurasian (AM, AZ, BY, KG, KZ, MD, RU, TJ, TM), European (AT, BE, BG, CH, CY, CZ, DE, DK, EE, ES, FI, FR, GB, GR, HU, IE, IS, IT, LT, LU, LV, MC, NL, PL, PT, RO, SE, SI, SK, TR), OAPI (BF, BJ, CF, CG, CI, CM, GA, GN, GQ, GW, ML, MR, NE, SN, TD, TG).

Published:

— *with international search report*

For two-letter codes and other abbreviations, refer to the "Guidance Notes on Codes and Abbreviations" appearing at the beginning of each regular issue of the PCT Gazette.

TITLE: SYSTEM AND METHOD FOR MOBILE TELEPHONE AS AUDIO GATEWAY

TECHNICAL FIELD OF THE INVENTION

The present invention relates to a system and method for rendering multimedia content between a multimedia storage source and a mobile telephone and/or a rendering device (e.g., a headset).

DESCRIPTION OF THE RELATED ART

Mobile telephones have evolved from voice-only electronic devices to multi-functional electronic devices. For example, mobile telephones may now function as electronic organizers, digital cameras, audio applications (e.g., MP3 players), video applications (e.g., video players), video game terminals, etc. Moreover, mobile telephones are not only used for voice communications, but they also are used in a variety of other forms (e.g., in instant messaging applications, sharing photographs, gaining access to information on the Internet, etc).

As the mobile telephone has evolved, so too have accessories for mobile telephones. For example, the first mobile telephones required the user to hold the telephone next to the user's mouth and ear during use. Later, a wired ear bud and microphone were developed that connected to the mobile telephone were developed. The wired ear bud allows the user's hands to be free from holding the mobile telephone during use. Wireless headsets have also been developed that provide the user with both wireless and hands-free convenience.

A wireless interface commonly used in headsets and mobile telephones is referred to as "Bluetooth" technology. Bluetooth refers to a technical specification designed to standardize wireless transmission between a wide variety of electronic devices, such as personal computers, mobile telephones, headsets, printers, personal digital assistants ("PDAs"), etc. Bluetooth acts as a "virtual cable", whereby one electronic device can easily communicate with another electronic device.

Bluetooth operates using frequency-hopping spread spectrum, where data packets are spread across the 2.45-GHz Spectrum at a rate of 1,600 hops per second to lessen interference. For Bluetooth devices, the nominal link range is 10 meters and the gross data rate is up to 3 Mbps, although higher data rates have been proposed for future versions of the standard. Bluetooth can support both synchronous connection oriented ("SCO") links for voice and asynchronous connectionless ("ACL") links for packet data.

Wireless local area networks ("WLANs") are now ubiquitous in everyday life. Such WLAN's are commonly available in many public areas (so-called "hotspots" or "hotzones"), as well as in homes and office environments. WLANs are generally compliant with one or more IEEE standards (e.g., 802.11a, 802.11b, 802.11g, etc.) and are easily configured to provide for open access or to limit access by authorization and link-level security procedures.

End users generally access the WLAN through WLAN adapters that may be implemented as a removable or fully embedded component in a stationary, portable or fully mobile device. Examples of such implementations in a desktop computer include ISA or PCI cards, as well as an external or removable USB adapter. Typical implementations for laptop computers include removable PCMCIA cards or embedded PCI Express or USB adapters, while typical implementations for PDAs and mobile telephones include removable SD Cards or embedded with USB or SDIO interconnections. In addition, the physical WLAN adapter is typically augmented with software (a "driver") that allows the device's operating system to manage the adapter and to create a transparent connection to the wireless network that can be used by various applications to the benefit of the end user.

Conventional methods for facilitating communication between mobile telephones and mobile telephone accessories (e.g., headsets, hands-free kits, etc.) are generally capable of receiving signals received directly from the mobile telephone. In the case of wireless communication between the mobile telephone and the mobile telephone accessory, a Bluetooth compatible protocol is often times utilized. With the Bluetooth implementation, media may be received by the mobile telephone is generally provided in an IETF protocol (e.g. SIP, SDP, RTP, TCP, UDP, etc.). Once received by the mobile telephone, the streaming media is converted into a Bluetooth-specific protocol (e.g., advanced audio distribution profile A2DP) and then transmitted to the rendering device (e.g., a headset). Converting the streaming media to a Bluetooth-specific protocol limits the functionality of the mobile telephone in a variety of ways, for example, limits the functionality of the rendering device, limits the ability of the user to use the mobile telephone for multiple tasks, limits the battery life of the mobile telephone, etc.

SUMMARY

Often times, it is desirable for users of mobile telephones to utilize the full functionality of their mobile telephone accessories, as well as gain access to multimedia content. Thus, a strong need exists for a system and method for establishing a data path utilizing IETF-compliant protocols between endpoints (e.g., streaming source and rendering device) of a wireless network.

One aspect of the invention relates to a method for rendering multimedia content, the method comprising: requesting access to a wireless network by a mobile telephone, wherein the wireless network includes at least one remote server; assigning a subnet internet protocol (IP) address to a rendering device by the mobile telephone; selecting at least one service and/or device by an associated user associated with the wireless network; and routing streaming audio related to the selected service and/or device to the rendering device based on the assigned subnet IP address.

According to an aspect of the invention, the mobile telephone is configured to provide one or more operations on a received signal from the network utilizing a Dynamic Host Configuration Protocol.

According to an aspect of the invention, the mobile telephone is configured to provide one or more operations on a received signal from the network utilizing network address translation.

According to an aspect of the invention, the request for access is transmitted by a wireless local area adapter associated with the mobile telephone.

According to an aspect of the invention, wherein the mobile telephone is associated with the rendering device prior to requesting access to the wireless network.

According to an aspect of the invention, the rendering device is a wireless headset.

According to an aspect of the invention, the mobile telephone is authenticated with the network prior to providing an identification of services and/or devices available on the wireless network.

According to an aspect of the invention, the server is a media server.

Another aspect of the invention relates to a method for rendering multimedia, the method comprising: obtaining a unique address for a mobile telephone in a wireless local area network, wherein the local area network includes at least one wireless access point and one or more servers; assigning a subnet internet protocol (IP) address to a rendering device associated with the mobile telephone; requesting information from at least one of the servers on the network through the mobile telephone; receiving information responsive to the request

for information by the mobile telephone; and directing streaming audio related to the requested information to the rendering device based on the assigned IP address.

According to an aspect of the invention, the unique address is an Internet Protocol address associated with the wireless local area network.

According to an aspect of the invention, the received information includes an identification of services and/or devices available on the network.

According to an aspect of the invention, the identification of services and/or devices include multimedia content stored on a media server.

According to an aspect of the invention, the multimedia content includes at least one audible component.

According to an aspect of the invention, the multimedia content also includes a video component for display on the mobile telephone.

According to an aspect of the invention, the mobile telephone is communicatively coupled to the local area network through an 802.11-compatible communication protocol.

According to an aspect of the invention, the headset is communicatively coupled to the wireless local area network through an 802.11-compatible communication protocol.

According to an aspect of the invention, transmitting control signals directly from the mobile telephone to the rendering device through a second wireless communication protocol.

According to an aspect of the invention, the second wireless communication protocol is Bluetooth.

Another aspect of the invention relates to a method for rendering multimedia content, the method comprising: requesting access to a wireless network by a mobile telephone; establishing a session on the wireless network; assigning a subnet internet protocol (IP) address to a peripheral device by the mobile telephone; providing an identification of services and/or devices to the mobile telephone from an associated server communicatively coupled to the wireless network; selecting at least one service and/or device by an associated user; and routing streaming audio related to the selected service and/or device to the peripheral device based on the assigned subnet IP address.

According to an aspect of the invention, the session is controlled by the mobile telephone.

Another aspect of the invention relates to a computer program stored on a machine readable medium, the program being suitable for use in a mobile telephone to assign a subnet internet protocol (IP) address to a headset, wherein: when the program is loaded in memory in the mobile telephone and executed causes the mobile telephone to route streaming audio received through a wireless local area network to headset based on the assigned IP address.

Other systems, devices, methods, features, and advantages of the present invention will be or become apparent to one having ordinary skill in the art upon examination of the following drawings and detailed description. It is intended that all such additional systems, methods, features, and advantages be included within this description, be within the scope of the present invention, and be protected by the accompanying claims.

It should be emphasized that the term "comprise/comprising" when used in this specification is taken to specify the presence of stated features, integers, steps or components but does not preclude the presence or addition of one or more other features, integers, steps, components or groups thereof."

The term "electronic equipment" includes portable radio communication equipment. The term "portable radio communication equipment", which herein after is referred to as a mobile radio terminal includes all equipment such as mobile telephones, pagers, communicators, i.e., electronic organizers, personal digital assistants (PDA's), portable communication apparatus, smart phones or the like.

BRIEF DESCRIPTION OF THE DRAWINGS

The foregoing and other embodiments of the invention are hereinafter discussed with reference to the drawings. The components in the drawings are not necessarily to scale, emphasis instead being placed upon clearly illustrating the principles of the present invention. Likewise, elements and features depicted in one drawing may be combined with elements and features depicted in additional drawings. Moreover, in the drawings, like reference numerals designate corresponding parts throughout the several views.

Figure 1 is an exemplary block diagram of a mobile telephone and headset in accordance with aspects of the present invention.

Figure 2 is an exemplary schematic diagram of a mobile telephone and headset in accordance with aspects of the present invention.

Figure 3 is an exemplary block diagram of a network in accordance with aspects of the present invention.

Figure 4 is an exemplary schematic diagram of a server in accordance with aspects of the present invention.

Figures 5A and 5B are exemplary protocol stacks associated with a mobile telephone and a rendering device in accordance with aspects of the present invention.

Figure 6 is an exemplary flow chart in accordance with aspects of the present invention.

DETAILED DESCRIPTION OF EMBODIMENTS

The present invention is directed to a system and method for rendering multimedia content between one or more devices associated with a wireless local area network or a wide area network and a mobile telephone and/or mobile telephone accessory. The mobile telephone acts as a gateway or proxy for routing multimedia content (e.g., audio files, video files, etc.) stored on a remote server.

The invention is described primarily in the context of a mobile telephone. However, it will be appreciated that the invention is not intended to relate solely to mobile telephones and can relate to any type of electronic equipment. Other types of electronic equipment that may benefit from aspects of the present invention include playback devices having at least audio playback capability or video playback capability in addition to audio playback capability. Exemplary playback devices include MP3 players, CD players and DVD players.

Referring to Figure 1, an electronic equipment assembly 10 is shown in accordance with the present invention. The illustrated electronic equipment assembly 10 includes electronic equipment 12 and a wirelessly coupled electronic equipment accessory 14. The electronic equipment 12 in the exemplary embodiment is a mobile telephone and will be referred to as the mobile telephone 12. The mobile telephone 12 is shown as having a "brick" or "block" design type housing 16, but it will be appreciated that other type housings, such as a clamshell housing or a slide-type housing, may be utilized without departing from the scope of the invention.

The electronic equipment accessory 14 in the exemplary embodiment is a rendering device and will be referred to as the headset 14. The headset 14 is shown as an ear mountable speaker and microphone assembly that exchanges audio data with the mobile telephone 12 over a wireless link. One of ordinary skill in the art will appreciate that any rendering device operable to receive signals from the mobile telephone 10 is deemed to fall within the scope of the present invention. For example, suitable rendering devices include headphones, earphones, speakers, televisions, stereos, and the like.

For purposes of the description herein, a wireless link is established using a Bluetooth protocol, such as in accordance with the Specification of the Bluetooth System, Covered Core Package version 2.0 + EDR, dated November 4, 2004, which is incorporated herein by reference in its entirety. Other suitable wireless interfaces (e.g., radio frequency, 802.11 compatible protocols, infrared, etc.) may be used to transmit data to the mobile telephone 12 and/or to the headset 14.

The mobile telephone 12 includes a display 18. The display 18 displays information to a user such as operating state, time, telephone numbers, contact information, various navigational menus, etc., which enables the user to utilize the various feature of the mobile telephone 12. The display 18 may also be used to visually display content accessible by the mobile telephone 12 and/or headset 14 from one or more remote sources (e.g., a media server). The displayed content may include audio and/or video presentations stored locally in memory 20 (Figure 2) of the mobile telephone 12 and/or stored remotely from the mobile telephone 12 (e.g., on a remote storage device, a media server, remote personal computer, etc.). Such presentations may be derived, for example, from multimedia files, including audio and/or video files, from a received mobile radio and/or television signal, etc. In many situations, the video presentations are accompanied by audio presentations. For example, the displayed video component may be a "music video" and the corresponding audio component may be music intended to be synchronized with the video component. As another example, the displayed video component may correspond to a received mobile television signal and the corresponding audio component may be speech and/or music intended to be synchronized with the video component.

The audio component may be broadcast to the user with a speaker 22 of the mobile telephone 12. Alternatively, the audio component may be broadcast to the user with a speaker 24 (Figure 2) of the headset 14. For stereo listening, the headset 14 may include a pair of speakers 24. Delivery of audio data from content source to the mobile telephone 12 and the headset 14 will be described in greater detail below.

The mobile telephone 12 further includes a keypad 26 that provides for a variety of user input operations. For example, the keypad 26 may include alphanumeric keys 28 for allowing entry of alphanumeric information such as telephone numbers, phone lists, contact information, notes, etc. In addition, the keypad 26 typically may include special function keys such as a "call send" key for initiating or answering a call, and a "call end" key for ending, or "hanging up" a call. Special function keys may also include menu navigation keys, for example, for navigating through a menu displayed on the display 18 to select different telephone functions, profiles, settings, etc., as is conventional. Other keys associated with the mobile telephone 12 may include a volume key, audio mute key, an on/off power key, a web browser launch key, a camera key, etc. Keys or key-like functionality may also be embodied as a touch screen associated with the display 18.

The mobile telephone 12 includes conventional call circuitry that enables the mobile telephone 12 to establish a call and/or exchange signals with a called/calling device, typically another mobile telephone or

landline telephone. However, the called/calling device need not be another telephone, but may be some other device such as an Internet web server, content providing server, etc.

Referring to Figure 2, a functional block diagram of the electronic equipment assembly 10 is illustrated. The mobile telephone 12 includes a primary control circuit 30 that is configured to carry out overall control of the functions and operations of the mobile telephone 12. The control circuit 30 may include a processing device 32, such as a CPU, microcontroller or microprocessor. The processing device 32 executes code stored in a memory (not shown) within the control circuit 30 and/or in a separate memory, such as memory 20, in order to carry out conventional operation of the mobile telephone 12. The memory 20 may be, for example, a buffer, a flash memory, a hard drive, a removable media, a volatile memory and/or a non-volatile memory. In addition, the processing device 32 executes code to carry out various functions of the mobile telephone 12.

Continuing to refer to Figures 1 and 2, the mobile telephone 12 includes an antenna 34 coupled to a radio circuit 36. The radio circuit 36 includes a radio frequency transmitter and receiver for transmitting and receiving signals via the antenna 34 as is conventional. The mobile telephone 12 further includes a sound signal processing circuit 38 for processing the audio signal transmitted by/received from the radio circuit 36. Coupled to the sound processing circuit 38 are the speaker 22 and a microphone 40 that enable a user to listen and speak via the mobile telephone 12 as is conventional. The radio circuit 36 and sound processing circuit 38 are each coupled to the control circuit 30 so as to carry out overall operation.

The mobile telephone 12 also includes the aforementioned display 18 and keypad 26 coupled to the control circuit 30. The mobile telephone 12 further includes an I/O interface 42. The I/O interface 42 may be in the form of typical mobile telephone I/O interfaces, such as a multi-element connector at the base of the mobile telephone 12. As is typical, the I/O interface 42 may be used to couple the mobile telephone 12 to a battery charger to charge a power supply unit (PSU) 44 within the mobile telephone 12. In addition, or in the alternative, the I/O interface 42 may serve to connect the mobile telephone 12 to a wired personal hands-free adaptor, to a personal computer or other device via a data cable, etc. The mobile telephone 12 may also include a timer 46 for carrying out timing functions. Such functions may include timing the durations of calls, generating the content of time and date stamps, etc.

The mobile telephone 12 may include various built-in accessories, such as a camera 48 for taking digital pictures. Image files corresponding to the pictures may be stored in the memory 20. In one embodiment, the mobile telephone 12 also may include a position data receiver (not shown), such as a global positioning satellite (GPS) receiver, Galileo satellite system receiver or the like.

To establish wireless communication with other locally positioned devices, such as the headset 14, another mobile telephone, a computer, etc., the mobile telephone 12 may include a local wireless interface adapter 50, such as a Bluetooth adapter.

To establish wireless communication with other locally positioned devices, such as a wireless local area network, wireless access point and the like, the mobile telephone 12 may further include a wireless interface adapter 51. As shown in Figure 2, the wireless interface adapter 51 may be a wireless local area network interface adapter and is referred to herein as WLAN adapter 52. One of ordinary skill in the art will readily appreciate that the WLAN adapter 52 is exemplary and any suitable connectivity technology may be implemented in accordance with the present invention (e.g., Bluetooth, infrared, etc.). Preferably, the WLAN

adapter 52 is compatible with one or more IEEE 802.11 protocols (e.g., 802.11(a), 802.11(b) and/or 802.11(g), etc.) and allows the mobile telephone 12 to acquire a unique identifier (e.g., MAC and IP addresses) on the WLAN and communicate with one or more devices on the WLAN, assuming the user has the appropriate privileges and/or has been properly authenticated.

The mobile telephone 12 may be configured to operate in a wide area communications system. The system can include one or more servers or call control elements for managing calls placed by and destined to the mobile telephone 12, transmitting content (e.g., image files, audio files, video files, voice and/or data packets, etc.) to the mobile telephone 12 and carrying out any other support functions. The server communicates with the mobile telephone 12 via a network and a transmission medium. The transmission medium may be any appropriate device or assembly, including, for example, a communications tower, another mobile telephone, a wireless access point, a satellite, etc. Portions of the network may include wireless transmission pathways.

The headset 14 includes a primary control circuit 54 that is configured to carry out overall control of the functions and operations of the headset 14. The control circuit 54 may include a processing device 56, such as a CPU, microcontroller or microprocessor. The processing device 56 executes code stored in a memory (not shown) within the control circuit 54 and/or in a separate memory, such as memory (not shown), in order to carry out operation of the headset 14, as described herein. The memory may be, for example, a buffer, a flash memory, a hard drive, a removable media, a volatile memory and/or a non-volatile memory. In addition, the processing device 56 executes code to carry out various functions of the headset 14.

The headset 14 includes a local interface adapter 58 that is compatible with the local interface adapter 50 of the mobile telephone 12 to establish a wireless interface between the headset 14 and the mobile telephone 12. The local interface adapter 58 is coupled to the control circuit 54 to selectively control and process information and/or data received and/or transmitted by the local interface adapter 58. Preferably, as discussed above, the local interface adapter 58 is Bluetooth compatible. The wireless interface established between adapters 50 and 58 may be used to exchange data, such as audio data, commands, control and/or status information between the mobile telephone 12 and the headset 14. One of ordinary skill in the art will understand the basic operations of a Bluetooth wireless communication interface, so the details will not be described here in detail for the sake of brevity.

The headset 14 further includes a WLAN interface adapter 60. The WLAN interface adapter 60 is coupled to the control circuit 54 to selectively control and process information and/or data received and/or transmitted by the WLAN interface adapter 60. Preferably, the WLAN adapter 60 is compatible with one or more IEEE 802.11 protocols (e.g., 802.11(a), 802.11(b) and/or 802.11(g), etc.) and allows headset 14 to acquire a unique address (e.g., IP address) on the WLAN and communicate with one or more devices associated with the WLAN, assuming the user has the appropriate privileges and/or has been properly authenticated. Although the interface adapter 60 has been described in terms of WLAN interface, similar to wireless interface adapter 52 described above, the interface adapter 60 may implement any suitable connectivity technology in accordance with the present invention (e.g., Bluetooth, infrared, etc.).

The headset 14 further includes an audio data processing device 62 that manages audio data. For example, the audio data processing device 62 may include an encoder 64 that encodes an audio signal received from a microphone 66 coupled to the headset 14. Encoded audio data may be transmitted to the mobile telephone 12 for use as part of a telephone call.

In addition, the audio data processing device 62 may include a decoder 68 and a data buffer 70 to process audio data received from the mobile telephone 12 and/or one or more devices associated with a WLAN.

The received audio data may be incoming audio data associated with a telephone call. In other situations, the audio data received by the headset 14 may be audio (e.g., music, sound, voice, etc.) derived from an audio file played back by the mobile telephone 12. The audio data received by the headset 14 may also originate from one or more devices associated with a WLAN and transmitted and/or streamed to the headset 14 for listening by the user, as described below. In yet other situations, the audio data may be associated with video content displayed on the display 18 by the mobile telephone 12. For example, a video file containing an audio component stored in the memory 20 may be played back by the mobile telephone 12 or a video signal containing an audio component may be received by the mobile telephone 12.

In these situations, a video component of the video file or received video signal may be decoded by, for example, the control circuit 30 or dedicated video decoder (not shown) to generate a video signal output to the display 18 for viewing. The audio component of the video file or received video signal may be decoded and delivered as an audio signal to the speaker 22 and/or the audio component may be transmitted as audio data to the headset 14 for decoding into an audio signal that is broadcast by the speaker 24. In another embodiment, the audio component of the video file or received video signal may be transmitted as audio data directly to the headset 14 from one or more devices associated with a local area network, without transmission to the mobile telephone 12, for decoding into an audio signal that is broadcast by the speaker 24.

As explained in detail below, audio data transmitted from the mobile telephone 12 to the headset 14 and/or transmitted from one or more devices associated with a WLAN to the headset 14 is typically in the form of media packets. Each media packet may contain a quantity of audio data, such as about 5 milliseconds of audio data. The audio data may be buffered by the buffer 62 and decoded by the decoder 60 into an audio signal for delivery to the speaker 24. As will be appreciated by one of ordinary skill in the art, the audio data may be mono, stereo or surround-sound, or arranged in any other suitable audio format.

An exemplary communication network 100 in accordance with aspects of the present invention is illustrated in Figure 3. The exemplary network illustrated in Figure 3 is a public wireless local area network, which utilizes Internet Engineering Task Force (IETF) protocols (e.g., IP, TCP, UDP, RTP, HTTP and the like) between the endpoints (e.g., the streaming source and rendering device (e.g., headset)). In this illustration, the mobile telephone 12 acts as a gateway or proxy for routing content (e.g., audio files, video files, etc.) stored on the server 102 through one or more routers 104 and an IP network 106, which may be any suitable network to a destination source. From the IP network 106 and, optionally, router 104, the multimedia content is transmitted to wired LAN 108, routed to the ACCESS POINT 110, and output to the destination source (e.g., mobile telephone 12 and/or rendering device 14) in a wireless manner.

Although the server 102 is shown as being outside of the wired LAN 108, this is for illustrative purposes only. One of ordinary skill in the art will readily appreciate that the server 102 may be located within the wired LAN 108 depending on the specific requirements of the server 102 and/or the LAN 108 or can be on a remote network that is connected to LAN 108 via the Internet. One of ordinary skill in the art will also appreciate that the exemplary LAN 108 may be a wireless local area network, a wide area network, personal-area access technology (e.g., wireless local area network, cellular network, WiMax, ultra wideband network, etc.) and/or a public network (e.g., the Internet).

As shown in Figure 3, the LAN 108 is communicatively couple to the access point 110. Access point 110 provides wireless communication medium between the mobile telephone 12 and/or headset 14 to the LAN 108. Thus, the mobile telephone 12 and/or headset 14 are communicatively coupled to the server 102.

One of ordinary skill in the art will appreciate that the communication medium between devices take the form of any medium that permits electronic devices to exchange information or data. For instance, the communication medium may be a wired communications medium, such as Ethernet, or a wireless communication medium, such as IEEE 802.11(a), 802.11(b) or 802.11(g). In addition, the communication medium may also be a combination of wired and wireless communications mediums. One of ordinary skill in the art will also appreciate that any communications medium allowing the functionality described herein shall be deemed to be within the scope of the present invention. Preferably the communication medium can support a variety of network protocols including, for example, IETF-compatible protocols (e.g., IP, TCP, UDP, RTP, HTTP and the like)

Figure 4 illustrates a schematic block diagram of an exemplary server (e.g., server 102). The server 102 may be any type of server. Preferably, the server 102 is a media server that is compatible with protocols developed by the Internet Engineering Task Force (IETF) (e.g., IP, TCP, UDP, RTP, HTTP and the like). The server 102 generally includes a processor 110, a memory 112, a data storage medium 114, a local interface 116, video and input/output interfaces 118, and various communication interfaces 120. The server 102 may include optionally a display 122, a keyboard 124, and a user input device 126 (e.g., a computer mouse).

The server 102 is capable of executing one or more computer applications 128 in accordance with aspects of the present invention. In one embodiment, computer applications 128 include at least one audio and/or video application program that is capable of transmitting multimedia content (e.g., audio files, video files, audiovisual files, photographs, slides, radio, streaming audio and/or video, etc.) in a user-sensible format upon request from an associated user. The multimedia content may be stored in the data storage medium 114 or a remote storage medium (not shown) that is communicatively coupled to the WLAN 100.

As stated above, the multimedia content may take any form (e.g., audio, video, photographs, streaming audio and/or video and the like) and may be stored in any suitable format (e.g., MPEG, AVI, MP3, JPG, TIFF, and the like). The server 102 may also store communications software, which is capable of converting the multimedia content stored on the server 102 and/or the remote storage medium to a format that can be rendered locally and/or remotely by the requesting device and/or a peripheral device associated with the requesting device (e.g., headset 14). Alternatively, the server 102 may provide the multimedia content in a known format and allow the requesting device and/or a peripheral device associated with the requesting device to perform any necessary conversion.

The computer application 128 may be logically associated with or call one or more additional computer applications or one or more sub-computer applications 130, which generally include compilations of executable code. In one embodiment, the computer application 128, and/or the sub-applications 130 are embodied as one or more computer programs (e.g., one or more software applications including compilations of executable code). The computer program(s) can be stored on a data storage medium or other computer readable medium, such as a magnetic or optical storage device (e.g., hard disk, CD-ROM, DVD-ROM, etc.).

To execute the computer application 128 and associated sub-applications 130, the server 102 can include one or more processors 110 used to execute instructions that carry out a specified logic routine(s).

Preferably, the server 102 is based on a client - server architecture and may serve multiple clients. However, one of ordinary skill in the art will readily appreciate that any combination of computers having the functionality described herein shall be deemed to be within the scope of the present invention. As stated above, the server 102 may be a media server that is compatible with IETF protocols (e.g., IP, TCP, UDP, RTP, HTTP and the like).

The server 102 may have a memory 112 for storing data, software, logic routine instructions, computer programs, files, operating system instructions, multimedia content and the like. As illustrated in Figure 4, the computer application 128 and sub-applications 130 can be stored in the memory 112. The memory 112 can comprise several devices and includes, for example, volatile and non-volatile memory components. Accordingly, the memory 112 can include, for example, random access memory (RAM), read only memory (ROM), hard disks, floppy disks, compact disks (e.g., CD ROM, DVD ROM, CD RW, etc.), tapes, and/or other memory components, plus associated drives and players for these memory types. The processor 110, memory 112, and the data storage medium 114 are coupled using a local interface 116. The local interface 116 can be, for example, a data bus with accompanying control bus, a network, or other subsystem.

The server 102 can have various video and input/output interfaces 118 as well as one or more communication interfaces 120. The interfaces 118 can be used to couple the server 102 to various peripherals, such as a display 122 (e.g., a CRT display, an LCD display, a plasma display, etc.), a keyboard 124, and a user input device 126. The communications interfaces 120 can be comprised of, for example, a modem, a network interface card, and/or a wireless network interface card. The communications interfaces 130 can enable the server 102 to transmit and receive multimedia content (e.g., audio files, video files, photographs and the like) via an external network, such as the Internet, a wide area network (WAN), a local area network (LAN), direct data link, or similar wired (e.g., Ethernet) or wireless system (e.g., 802.11-compliant protocols). Preferably, the system 100 has the capabilities for both a wired communications interface (e.g., Ethernet) and a wireless communications interface (e.g., 802.11-compliant protocols) to accomplish the functionality described herein.

The server 102 transmits and receives information (e.g., multimedia content, data, requests for information, etc.) to and from peripherals and/or devices that comprise the LAN 106. The LAN 106 generally includes any electronic device that is capable of communicating (e.g., receiving and/or transmitting information) with any other device, including the network 100. The mobile telephone 12 and/or headset 14 are portable devices that may access one or more services provided by the network 100, through WLAN interface adapters 52 and 60, respectively.

As shown in Figure 3, the network 100 includes wireless communication from the LAN 108 to the mobile telephone 12 and/or headset 14 through access point 110 and one or more intermediary devices (e.g. access point 110, routers 104, IP network 106, etc.). Mobile telephone 12 is provided with a communication protocol that can be executed by an internal processor of the device and/or by dedicated communications hardware (e.g., a transceiver) coupled to the device for communication with the access point 110. The WLAN adapter 52 of the mobile telephone generally includes a built-in antenna (not shown). The antenna allows the WLAN adapter 52 to exchange signals with the wireless access point 110. The access point 110 generally executes a communication protocol corresponding to the communication protocol executed by the client devices (e.g., device associated with the LAN 108 and/or the mobile telephone 12. The access point 110 also includes

communications hardware (e.g., a transceiver with an antenna) for broadcasting signals to the various client devices and receiving signals broadcast by the client devices.

Figures 5A and 5B illustrate an exemplary IETF standard protocol stacks implemented for the mobile telephone 12 and the headset 14, respectively. Referring to Figure 5A, an exemplary protocol stack is illustrated for mobile telephone 12. The protocol stack 150 may include: a network layer 152, a WiFi layer 154 and a Bluetooth stack 153. The network layer 152 includes a logic link layer 155, an Internet Protocol (IP) layer 156, a user datagram protocol (UDP) layer 158, a transport control protocol (TCP) layer 160, and a data link control protocol (DLCP) layer 162. The WiFi layer 154 includes an 802.11 radio frequency (RF) layer 164, an 802.11 physical (PHY) layer 166 and an 802.11 medium access control (MAC) layer 168. The network layer 152 and the WiFi layer 154 communicate with an authentication and security module 170. Likewise, the Bluetooth stack 153 may also communicate with the network layer 152 and the authentication and security module 170

Referring to Figure 5B, an exemplary protocol stack 180 is illustrated for headset 14. The protocol stack 180 includes: a network layer 182, a WiFi layer 184 and a Bluetooth stack 185. The network layer 182 includes a logic link layer 186, an Internet Protocol (IP) layer 188, a user datagram protocol (UDP) layer 190, a transport control protocol (TCP) layer 192 and a Real Time Transport Protocol/ Real Time Control Protocol (RTP/RTCP) layer 194. The WiFi layer 184 includes an 802.11 radio frequency (RF) layer 196, an 802.11 physical (PHY) layer 198 and an 802.11 medium access control (MAC) layer 200. The headphone 14 is capable of receiving and rendering Bluetooth signals and WiFi signals through the respective layers (e.g.., Bluetooth stack 185, WiFi layer 184).

The mobile telephone 12 also includes dynamic host configuration protocol (DHCP) and network address translation (NAT) server functionality that is typically found in a network gateway. In this manner, devices peripheral to the mobile telephone 12, such as the headset 14 are treated as a subnet that is "hidden" to the network beyond the gateway. By using DHCP and NAT, respectively, the mobile telephone assigns subnet IP addresses to the peripherals and directs incoming IP traffic (e.g., streaming audio) from the network to the proper peripheral(s) based on the assigned subnet addresses.

An exemplary method 250 in accordance with aspects of the present invention is illustrated in Figure 6. Referring to Figures 3 and 6, at step 252, the user associates the headset 14 with the mobile telephone 12. The headset 14 is designated as the audio sink endpoint (e.g., rendering device) for rendering one or more audio components transmitted from server 102. The headset 14 becomes part of the private subnet and receives an IP address from the DHCP server of the mobile telephone 12.

At step 254, the mobile telephone 12 requests access to the network 100 through the access point 110. The request may include a session description protocol (SDP) payload field, which may specify, for example, negotiation parameters, services requested, format of information, etc. In the exemplary system illustrated in Figure 3, a public WLAN 100 is provided, wherein the user must be authenticated prior to access to the network 100. Accordingly, at step 256, the request is routed to the AAA server 109 by one or more redirect servers and/or proxy servers (not shown). The AAA server 109 provides authentication services to the public network 100. Assuming the user is properly authenticated, the user is provided access to the network 100, at step 258. If the user is unable to properly authenticate him or herself, the user is denied access to the public network 100.

At step 260, an identification of available services and/or devices is provided to the mobile telephone 12. Once network access is established, at step 262, the user of the mobile telephone 12 may identify desired audio content and/or devices on a remote server 102. For example, this could be content stored on server 102 (e.g., a personal server, a personal computer in a home, a media server, etc. or content from a commercial music service (e.g., iTunes, operator portal, etc.)). The user selects the desired content to stream and initiates a streaming session with the server 102. The mobile telephone 12 also configures the headset 14 to accept the pending media flow from the server 102.

At step 264, the server transmits the audio to the mobile telephone 12 using conventional IETF protocols (e.g., RTP, UDP and IP) over the network 100. At step 266, the mobile telephone 12 then forwards these packets to the headset 14, using NAT to establish the correct address for the headset 14 in the internal subnet. At step 268, the headset 14 unpacks, decodes and renders the streaming audio in a user-sensible format through one or more speakers 24.

In this example, session control is managed by the mobile telephone 12 while the media stream is established between the server and headset. Session control may occur between local interface adapters 58 and 50 of the headset 14 and the mobile telephone 12, respectively. Session control may also occur between WLAN interface adapters 60 and 52 of the headset and the mobile telephone 12, respectively. Steps 252 through 268 are generally repeated whenever a new session is started. The exemplary method 250 utilizes WLAN interface adapters 52 and 60 to stream audio from the server 102 to the headset 14.

Specific embodiments of an invention are disclosed herein. One of ordinary skill in the art will readily recognize that the invention may have other applications in other environments. In fact, many embodiments and implementations are possible. The following claims are in no way intended to limit the scope of the present invention to the specific embodiments described above. In addition, any recitation of "means for" is intended to evoke a means-plus-function reading of an element and a claim, whereas, any elements that do not specifically use the recitation "means for", are not intended to be read as means-plus-function elements, even if the claim otherwise includes the word "means". It should also be noted that although the specification lists method steps occurring in a particular order, these steps may be executed in any order, or at the same time.

Computer program elements of the invention may be embodied in hardware and/or in software (including firmware, resident software, micro-code, etc.). The invention may take the form of a computer program product, which can be embodied by a computer-usable or computer-readable storage medium having computer-usable or computer-readable program instructions, "code" or a "computer program" embodied in the medium for use by or in connection with the instruction execution system. In the context of this document, a computer-usable or computer-readable medium may be any medium that can contain, store, communicate, propagate, or transport the program for use by or in connection with the instruction execution system, apparatus, or device. The computer-usable or computer-readable medium may be, for example but not limited to, an electronic, magnetic, optical, electromagnetic, infrared, or semiconductor system, apparatus, device, or propagation medium such as the Internet. Note that the computer-usable or computer-readable medium could even be paper or another suitable medium upon which the program is printed, as the program can be electronically captured, via, for instance, optical scanning of the paper or other medium, then compiled, interpreted, or otherwise processed in a suitable manner. The computer program product and any software and

hardware described herein form the various means for carrying out the functions of the invention in the example embodiments.

CLAIMS

What is claimed is:

1. A method for rendering multimedia content, the method comprising:

requesting access to a wireless network (100) by a mobile telephone (12), wherein the wireless network (100) includes at least one remote server (102);

assigning a subnet internet protocol (IP) address to a rendering device (14) by the mobile telephone (12);

selecting at least one service and/or device by an associated user associated with the wireless network (100); and

routing streaming audio related to the selected service and/or device to the rendering device (14) based on the assigned subnet IP address.

2. The method of claim 1, wherein the mobile telephone (12) is configured to provide one or more operations on a received signal from the network (100) utilizing a Dynamic Host Configuration Protocol.

3. The method of any of claims 1-2, wherein the mobile telephone (12) is configured to provide one or more operations on a received signal from the network (100) utilizing network address translation.

4. The method of any of claims 1-3, wherein the request for access is transmitted by a wireless local area adapter (52) associated with the mobile telephone (12).

5. The method of any of claims 1-4 further including associating the mobile telephone (12) to the rendering device (14) prior to requesting access to the wireless network (100).

6. The method of any of claims 1-5, wherein the rendering device (14) is a wireless headset.

7. The method of any of claims 1-6 further including authenticating the mobile telephone (12) with the network (100) prior to providing an identification of services and/or devices available on the wireless network (100).

8. A method for rendering multimedia, the method comprising:

obtaining a unique address for a mobile telephone (10) in a wireless local area network (100), wherein the local area network (100) includes at least one wireless access point (110) and one or more servers (102);

assigning a subnet internet protocol (IP) address to a rendering device (14) associated with the mobile telephone (12);

requesting information from at least one of the servers (102) on the network (100) through the mobile telephone (12);

receiving information responsive to the request for information by the mobile telephone (12); and

directing streaming audio related to the requested information to the rendering device (14) based on the assigned IP address.

9. The method of claim 8, wherein the unique address is an Internet Protocol address associated with the wireless local area network (100).

10. A method for rendering multimedia content, the method comprising:

requesting access to a wireless network (100) by a mobile telephone (12);

establishing a session on the wireless network (100);

assigning a subnet internet protocol (IP) address to a peripheral device (14) by the mobile telephone (12);

providing an identification of services and/or devices to the mobile telephone (12) from an associated server (102) communicatively coupled to the wireless network (100);

selecting at least one service and/or device by an associated user; and

routing streaming audio related to the selected service and/or device to the peripheral device (14) based on the assigned subnet IP address.

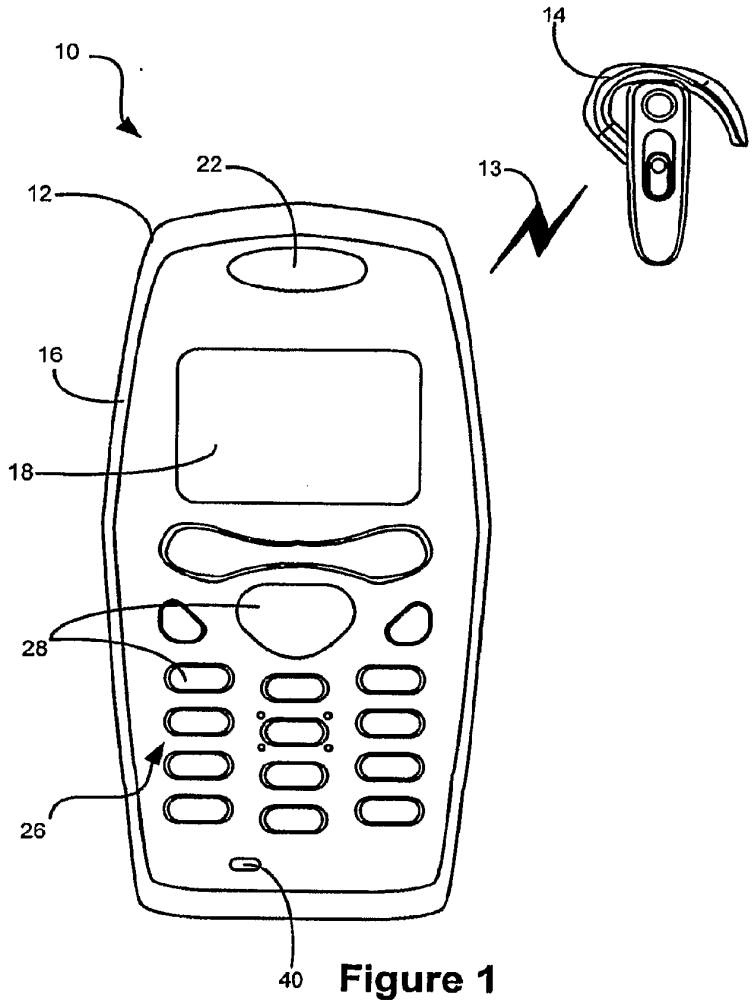

Figure 1

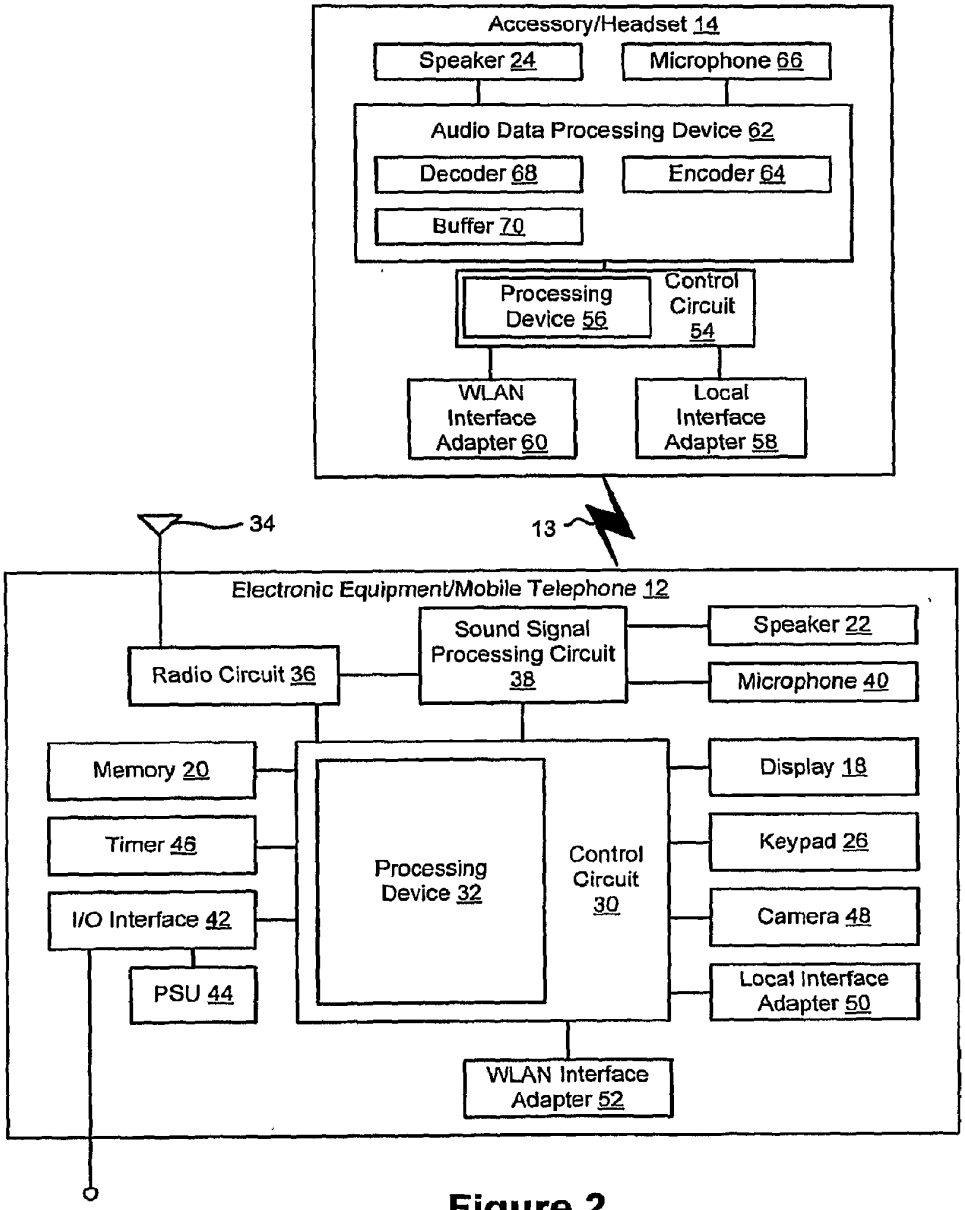
Accessory/Headset 14
Speaker 24
Microphone 66
Audio Data Processing Device 62
Decoder 68
Encoder 64
Buffer 70
Processing Device 56
Control Circuit 54
WLAN Interface Adapter 60
Local Interface Adapter 58
34
13
Electronic Equipment/Mobile Telephone 12
Sound Signal Processing Circuit 38
Speaker 22
Radio Circuit 36
Microphone 40
Memory 20
Display 18
Timer 46
Processing Device 32
Control Circuit 30
Keypad 26
I/O Interface 42
Camera 48
PSU 44
Local Interface Adapter 50
WLAN Interface Adapter 52

Figure 2

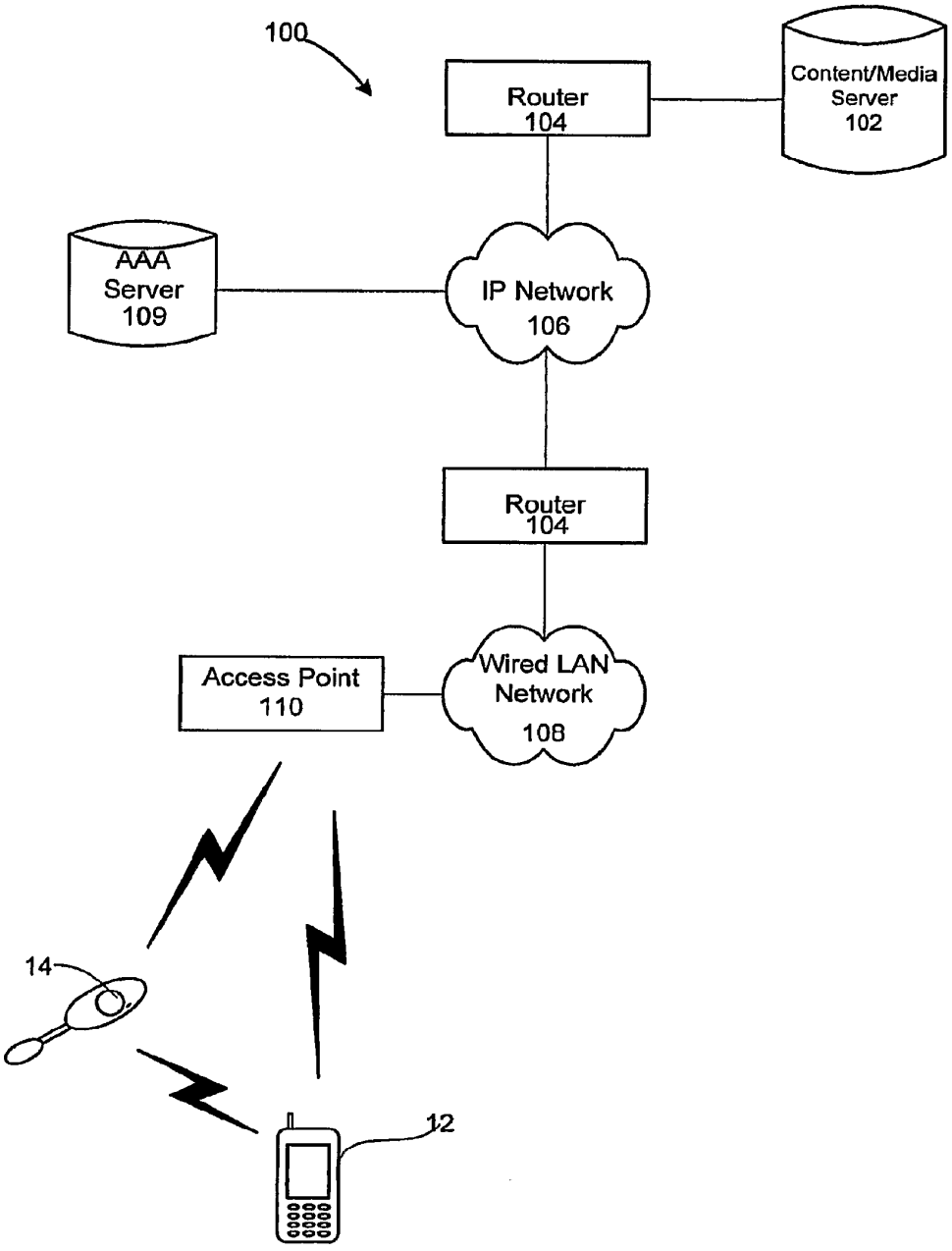
100
Router
104
Content/Media
Server
102
AAA
Server
109
IP Network
106
Router
104
Access Point
110
Wired LAN
Network
108
14
12

Figure 3

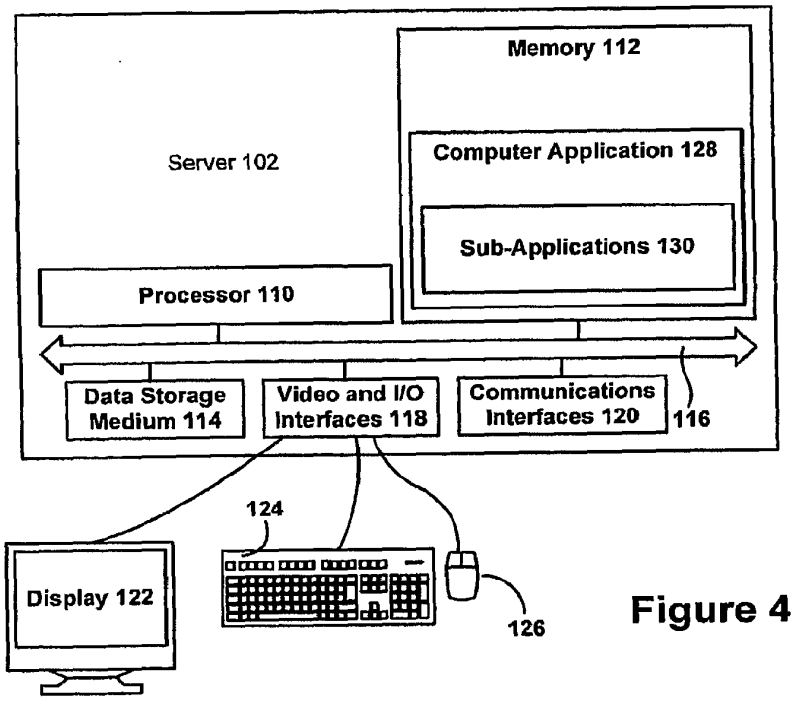
Memory 112
Server 102
Computer Application 128
Sub-Applications 130
Processor 110
Data Storage Medium 114
Video and I/O Interfaces 118
Communications Interfaces 120
116
124
Display 122
126

Figure 4

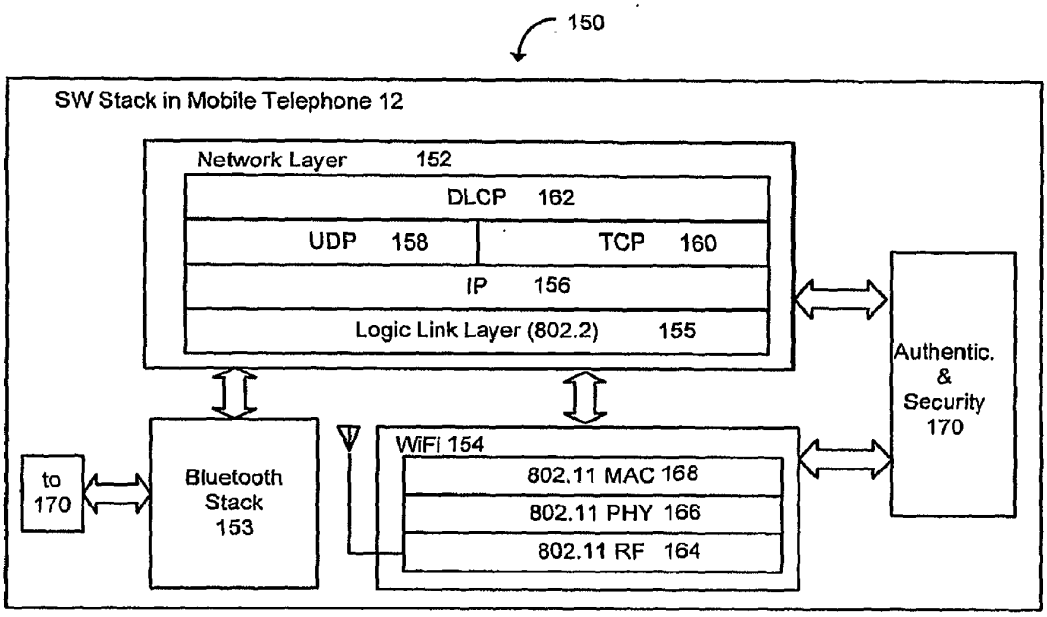

Figure 5A

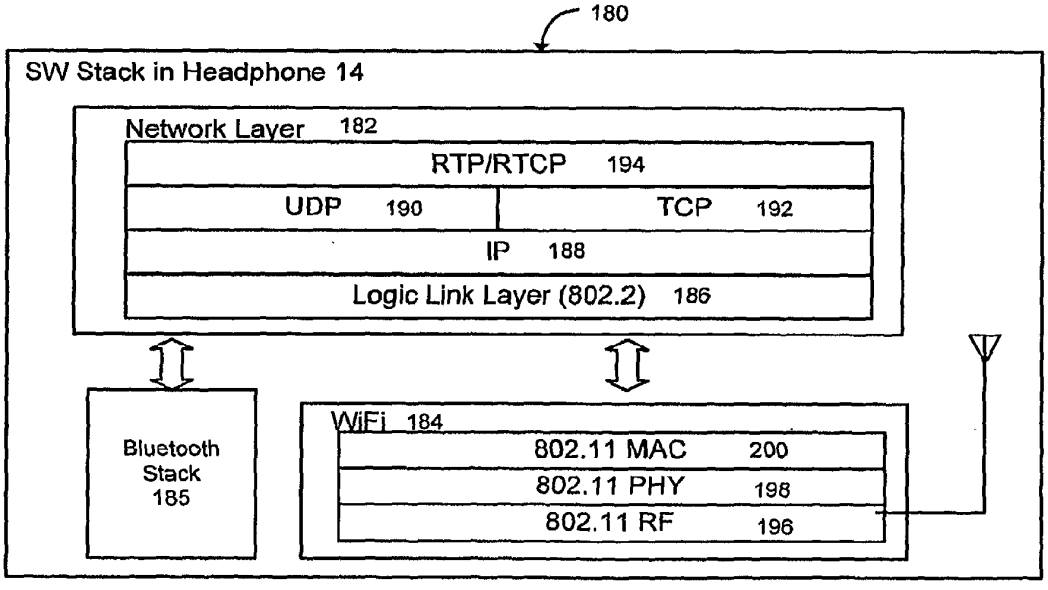

Figure 5B

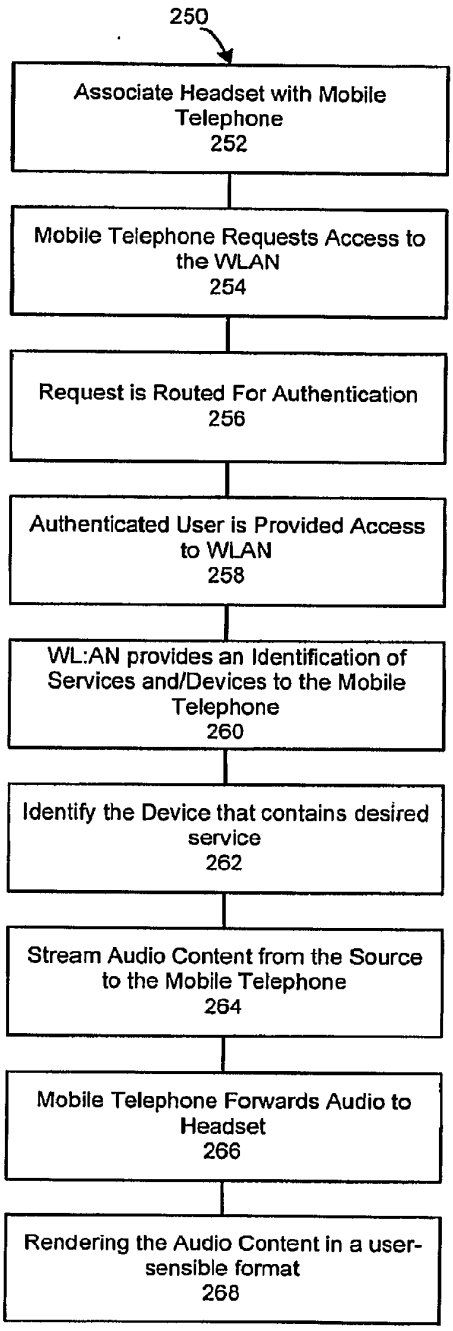
250
Associate Headset with Mobile Telephone
252
Mobile Telephone Requests Access to the WLAN
254
Request is Routed For Authentication
256
Authenticated User is Provided Access to WLAN
258
WL:AN provides an Identification of Services and/Devices to the Mobile Telephone
260
Identify the Device that contains desired service
262
Stream Audio Content from the Source to the Mobile Telephone
264
Mobile Telephone Forwards Audio to Headset
266
Rendering the Audio Content in a user-sensible format
268

Figure 6

INTERNATIONAL SEARCH REPORT

International application No
PCT/US2006/044877

A. CLASSIFICATION OF SUBJECT MATTER
INV. H04L29/12

According to International Patent Classification (IPC) or to both national classification and IPC

B. FIELDS SEARCHED

Minimum documentation searched (classification system followed by classification symbols)
H04L H04Q H04R

Documentation searched other than minimum documentation to the extent that such documents are included in the fields searched

Electronic data base consulted during the international search (name of data base and, where practical, search terms used)
EPO-Internal, WPI Data, INSPEC, IBM-TDB, COMPENDEX

C. DOCUMENTS CONSIDERED TO BE RELEVANT

Category*	Citation of document, with indication, where appropriate, of the relevant passages	Relevant to claim No.
X	WO 2005/041460 A (IXI MOBILE INC [US]; HALLER AMIT [US]; FORNELL PETER [US]; ITZCHAK AVR) 6 May 2005 (2005-05-06) page 2, line 8 - line 24 page 3, line 3 - line 30 page 7, line 6 - line 11 page 7, line 20 - line 30 page 6, line 12 - line 22 page 9, line 17 - line 22 page 11, line 19 - line 20 page 13, line 9 - line 25 page 15, line 6 - line 10 page 16, line 1 - line 23 page 19, line 5 - page 20, line 15 page 21, line 9 - page 22, line 9 page 30, line 8 - line 15 figures 1,5,6 -/--	1-10

[X] Further documents are listed in the continuation of Box C.

[X] See patent family annex.

* Special categories of cited documents :

"A" document defining the general state of the art which is not considered to be of particular relevance

"E" earlier document but published on or after the international filing date

"L" document which may throw doubts on priority claim(s) or which is cited to establish the publication date of another citation or other special reason (as specified)

"O" document referring to an oral disclosure, use, exhibition or other means

"P" document published prior to the international filing date but later than the priority date claimed

"T" later document published after the international filing date or priority date and not in conflict with the application but cited to understand the principle or theory underlying the invention

"X" document of particular relevance; the claimed invention cannot be considered novel or cannot be considered to involve an inventive step when the document is taken alone

"Y" document of particular relevance; the claimed invention cannot be considered to involve an inventive step when the document is combined with one or more other such documents, such combination being obvious to a person skilled in the art.

"&" document member of the same patent family

Date of the actual completion of the international search	Date of mailing of the international search report
15 March 2007	23/03/2007

Name and mailing address of the ISA/	Authorized officer
European Patent Office, P.B. 5818 Patentlaan 2 NL – 2280 HV Rijswijk Tel. (+31–70) 340–2040, Tx. 31 651 epo nl, Fax: (+31–70) 340–3016	Hes, Ronald

Form PCT/ISA/210 (second sheet) (April 2005)

INTERNATIONAL SEARCH REPORT

International application No
PCT/US2006/044877

C(Continuation). DOCUMENTS CONSIDERED TO BE RELEVANT

Category*	Citation of document, with indication, where appropriate, of the relevant passages	Relevant to claim No.
A,P	WO 2006/116190 A (QUALCOMM INC [US]; BABBAR UPPINDER SINGH [US]; LIOY MARCELLO [US]; ABR) 2 November 2006 (2006-11-02) abstract paragraph [0003] - paragraph [0005] paragraph [0042] - paragraph [0044] paragraph [0064] paragraph [0072]	1-10

Form PCT/ISA/210 (continuation of second sheet) (April 2005)

INTERNATIONAL SEARCH REPORT

Information on patent family members

International application No
PCT/US2006/044877

Patent document cited in search report	Publication date	Patent family member(s)	Publication date
WO 2005041460 A	06-05-2005	EP 1652332 A2	03-05-2006
WO 2006116190 A	02-11-2006	US 2006239266 A1	26-10-2006

Form PCT/ISA/210 (patent family annex) (April 2005)

(12) INTERNATIONAL APPLICATION PUBLISHED UNDER THE PATENT COOPERATION TREATY (PCT)

(19) World Intellectual Property Organization
International Bureau

(43) International Publication Date
29 November 2007 (29.11.2007)

PCT

(10) International Publication Number
WO 2007/136620 A2

(51) International Patent Classification:
H01Q 15/00 (2006.01)

(21) International Application Number:
PCT/US2007/011631

(22) International Filing Date: 15 May 2007 (15.05.2007)

(25) Filing Language: English

(26) Publication Language: English

(30) Priority Data:

60/800,749	16 May 2006 (16.05.2006)	US
60/800,679	16 May 2006 (16.05.2006)	US
60/800,750	16 May 2006 (16.05.2006)	US

(71) Applicant *(for all designated States except US)*: **AUTONET MOBILE, INC.** [US/US]; 10 Skylark Drive, Suite 41, Larkspur, CA 94939 (US).

(72) Inventor; and

(75) Inventor/Applicant *(for US only)*: **MOELLER, Douglas, S.** [US/US]; 1055w. College, #308, Santa Rosa, CA 95401 (US).

(74) Agents: **KNEDEISEN, Mark, G.** et al.; Kirkpatrick & Lockhart Preston Gates Ellis Llp, Henry W. Oliver Building, 535 Smithfield Street, Pittsburgh, PA 15222-2312 (US).

(81) Designated States *(unless otherwise indicated, for every kind of national protection available)*: AE, AG, AL, AM, AT, AU, AZ, BA, BB, BG, BH, BR, BW, BY, BZ, CA, CH, CN, CO, CR, CU, CZ, DE, DK, DM, DZ, EC, EE, EG, ES, FI, GB, GD, GE, GH, GM, GT, HN, HR, HU, ID, IL, IN, IS, JP, KE, KG, KM, KN, KP, KR, KZ, LA, LC, LK, LR, LS, LT, LU, LY, MA, MD, ME, MG, MK, MN, MW, MX, MY, MZ, NA, NG, NI, NO, NZ, OM, PG, PH, PL, PT, RO, RS, RU, SC, SD, SE, SG, SK, SL, SM, SV, SY, TJ, TM, TN, TR, TT, TZ, UA, UG, US, UZ, VC, VN, ZA, ZM, ZW.

(84) Designated States *(unless otherwise indicated, for every kind of regional protection available)*: ARIPO (BW, GH, GM, KE, LS, MW, MZ, NA, SD, SL, SZ, TZ, UG, ZM, ZW), Eurasian (AM, AZ, BY, KG, KZ, MD, RU, TJ, TM), European (AT, BE, BG, CH, CY, CZ, DE, DK, EE, ES, FI, FR, GB, GR, HU, IE, IS, IT, LT, LU, LV, MC, MT, NL, PL, PT, RO, SE, SI, SK, TR), OAPI (BF, BJ, CF, CG, CI, CM, GA, GN, GQ, GW, ML, MR, NE, SN, TD, TG).

Published:
— *without international search report and to be republished upon receipt of that report*

[Continued on next page]

(54) Title: MOBILE ROUTER WITH SERIAL DEVICE INTERFACE

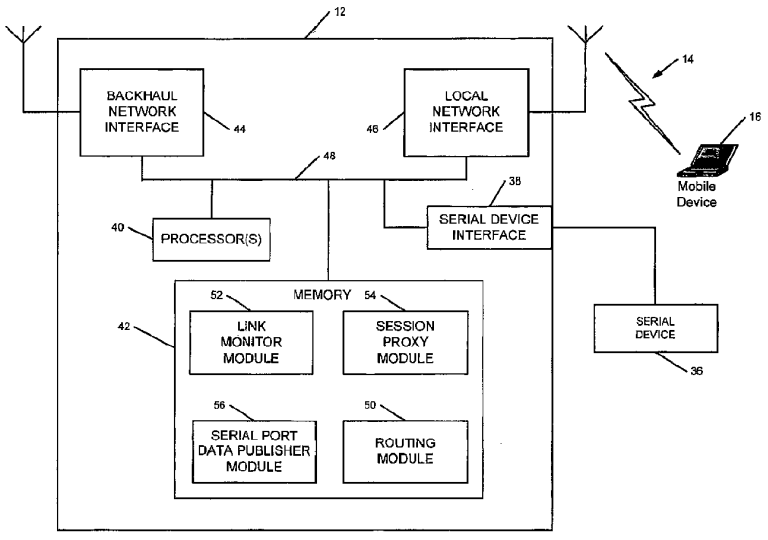

(57) Abstract: A mobile router having a serial interface is disclosed. According to various embodiments, the mobile router may comprise a serial port data publisher module that may take data received from a serial device connected to a serial port of the mobile router and make the data from the serial device available via a TCP stream. In that way, the serial port data publisher module may be used, for example, to populate a remote database with the data from the serial device. That way, the data from the serial device may be remotely accessed via the Internet, for example. In addition, the mobile router can be used to output a received signal from the device connected to its serial interface.

WO 2007/136620 A2

For two-letter codes and other abbreviations, refer to the "Guidance Notes on Codes and Abbreviations" appearing at the beginning of each regular issue of the PCT Gazette.

MOBILE ROUTER WITH SERIAL DEVICE INTERFACE

Inventor: Douglas S. Moeller

CROSS-REFERENCE TO RELATED APPLICATIONS

The present application claims priority to the following U.S. provisional applications:

(1) U.S. provisional application Serial No. 60/800,679, filed May 16, 2006, entitled "Mobile Router With Serial Interface," by Douglas S. Moeller;

(2) U.S. provisional application Serial No. 60/800,749, filed May 16, 2006, entitled "Mobile Router That Monitors Links," by Douglas S. Moeller; and

(3) U.S. provisional application Serial No. 60/800,750, filed May 16, 2006, entitled "Mobile Router With Session Proxy," by Douglas S. Moeller.

The present application is related to the following, contemporaneously-filed PCT applications:

(1) PCT application entitled "Mobile Router With Session Proxy," by Douglas S. Moeller, Attorney Docket No. 060275PCT; and

(2) PCT application entitled "Mobile Router That Monitors Links," by Douglas S. Moeller, Attorney Docket No. 060274PCT.

BACKGROUND

Many people use mobile or wireless end-user computer-type devices for a variety of purposes. These devices include smartphones, handheld computer-type devices, personal digital assistants (PDAs), laptop computers equipped with a wireless network interface card, etc. Users often use such devices to read and write email messages, access the Internet, download and view image or video files, run applications, etc.

In order to use such mobile devices, the mobile devices must be able to connect to a wireless network. Conventional wireless local area networks (WLANs) are often deployed inside structures such as homes, offices, public and commercial buildings, etc. The WLAN typically comprises one or more wireless access points, such as a wireless router or hot spot, which communicates wirelessly with the mobile device, and allows the mobile device to connect to a wired network (or other network) that is also in communication with the access

point. In order to stay connected to such WLANs, the mobile user must usually stay with the range of the access points. This often constrains the effective mobility of a wireless user. The mobile user must stay in the home, office or building to have wireless access to the WLAN, but if the mobile user leaves the premises, the mobile user may leave the range of the wireless access points and thereby lose connectivity to the network. For the IEEE 802.11 standard, also known as Wi-Fi, the range of such access points is about 50 meters for indoor environments and 100 meters for outdoor environments.

Some campuses and urban areas provide broader W-Fi coverage areas by placing a number of cooperating Wi-Fi hot spots throughout the campus or urban area. This provides the mobile user with greater wireless access as the mobile user generally can move around the campus/urban area while maintaining wireless connectivity. However, when the mobile user leaves the campus/urban area, the user may lose connectivity, thus constraining the wireless mobility of the user.

This dilemma has been addressed somewhat by cellular networks that allow mobile devices to communicate wireless data with such cellular networks using data communication standards, such as GSM/GPRS (Global System for Mobile Communications/General Packet Radio Service) or EDGE (Enhanced Data rates for GSM Evolution). Such cellular networks generally provide much broader coverage areas than WLANs or Wi-Fi area, so a mobile user will ordinarily have fewer restrictions on mobility when accessing such a cellular network. Further, cellular networks typically can accommodate roaming users by allowing users to stay connected as they travel from one cellular network to another.

Nevertheless, mobile end-user devices often experience interruptions in service due to drop-offs by the network (either Wi-Fi or cellular network). This problem is exacerbated when the user is quickly moving between network cells, hot spots or networks. This can be caused, for example, (i) because the user's wireless access provider/protocol is not compatible with the new cell, hot spot or network, (ii) because the new cell, hot spot or network is overly congested with traffic, (iii) because of faulty hand-off procedures between the cells, hot spots, or networks, or many other reasons.

In addition, a mobile end-user may experience other types of performance problems, including a change of bit rate or bandwidth during the data transmission, and a change in the quality of service (e.g., jitter, latency, data loss, etc.).

Accordingly, there exists a need for a way to alleviate or mitigate the problems experienced by a user of mobile end-user device.

SUMMARY

In one general aspect, the present invention is directed to a mobile router. The mobile router may communication with one or more mobile devices via a local wireless network, such as a Wi-Fi or Wi-MAX network. The mobile router may further act as a gateway for communications from the mobile device to a backhaul network, which also in communication with the mobile router via a wireless communication link. The backhaul network may comprise a cellular network, such as a GSM/GPRS or UTMS network, or some other type of wireless network. The backhaul network may be connected to the Internet or other network (e.g., WAN). That way, the mobile device can communicate with a destination device connected to the Internet (or other network) via the mobile router and the backhaul network.

Further, because the mobile router wirelessly communicates with the backhaul network, it can move with the mobile device as the mobile device moves to provide enhanced mobile wireless connectivity for the mobile device. For example, the mobile router can be installed, affixed or otherwise placed in a vehicle, such as a car, bus, boat, rail car, etc., where the end user of the mobile device is a passenger (or driver). That way, the end user can maintain wireless activity as the user moves about.

According to various embodiments, the mobile router may comprise a session proxy module establishes two transport protocol sessions – one between the mobile router and the mobile device, and one between the mobile router and a destination device – when the end user seeks to communicate with the destination device through the mobile router. That way, if the session between the mobile router and a destination device goes down, the session between the mobile router and the mobile device may remain active, thereby allowing the mobile device to believe that the session is still active while the mobile router works to restore the session. Also, the two sessions may use different protocols. For example, the session between the mobile device and the mobile router may use the TCP protocol, whereas the session between the mobile router and the destination device may use a different protocol, such as HS-TCP or SCPS. Moreover, the establishment of the two sessions by the mobile router may be transparent to the end user. Also, the end user could have the option of disabling the session proxy functionality in certain embodiments. This may be desirable when the end user is using an application that encrypts the TCP headers.

Another potential benefit is that when the backhaul network goes down, the session proxy module may prevent the TCP session for the link to the mobile device 16 from

starting its back-off timers. This is advantageous because, under the TCP protocol, the mobile device would normally assume that it cannot forward packets because of network congestion and it would accordingly start to slow down the user's session. In contrast, with the session proxy module maintaining a session between the mobile router and the mobile device that is separate from the session between the mobile router and the backhaul network, the mobile device may not assume that network congestion is a problem and the TCP session between mobile router and the mobile device may not slow down. Another potential benefit is that the TCP timers and congestion windows can be adjusted dynamically so that the link may be optimized for the particular characteristics of the backhaul network (e.g., packet loss, latency jitter, etc.).

In addition, the mobile router may comprise a session link module that monitors the layer 2 and/or layer 3 links of the mobile router with the backhaul network. That way, when the link monitor module detects a drop-off, the link monitor module can reestablish the link as quickly as possible in order to minimize the interruption in service to the end user. According to various embodiments, the link monitor module does this by sending and monitoring test (or probing) data packets over the backhaul wireless communication link. That way, the user does not have to restart his/her applications or sessions. The user just typically notices that the applications/sessions slowed for a brief period of time while the connection was being reestablished.

In addition, according to various embodiments, the mobile router may include a serial data port for communicating with a serial data device connected thereto. In addition, the mobile router may include a serial device data publication module which transmits data from the serial device over the backhaul network to a destination device, such as a server/database, such that remote users could access the database to retrieve the data from the serial device. The serial device could be, for example, a GPS receiver that records location data for the mobile router, or another type of serial data device. In addition, rather than transmitting the data to a server/database, a remote user could access the mobile router to access the data from the serial device directly. Additionally, the serial interface of the mobile router could be used to output data/command signals to the connected serial device.

These and other benefits will be apparent from the description to follow.

FIGURES

Various embodiments of the present invention are described herein by way of example in conjunction with the following figures, wherein:

Figure 1 is a block diagram of a network including a mobile router according to various embodiments of the present invention;

Figure 2 is a block diagram of a mobile router according to various embodiments of the present invention; and

Figure 3 is a block diagram of the process flow of the link monitor module of the mobile router according to various embodiments of the present invention.

DESCRIPTION

Figure 1 is a diagram of a network 10 according to various embodiments of the present invention. As shown in Figure 1, the network 10 comprises a mobile router 12 in communication with a mobile device 16 via a wireless communication link 14 (referred to sometimes hereinafter as the "local wireless communication link 14"). The wireless communication link 14 may be provided as part of the wireless network 15 including the mobile router 12 and the mobile device 16. The wireless network 15 (referred to sometimes hereinafter as the "local wireless network 15") may be, for example, a WiFi network (e.g., IEEE 802.11 network), a WiMAX network (IEEE 802.16), a Bluetooth network, or any other suitable wireless network.

The mobile device 16 may be any computer-based device capable of receiving and transmitting data via the wireless communication link 14. For example, the mobile device 16 may be a laptop (or notebook) computer (as shown in the example of Figure 1) equipped with a wireless network interface card, a wireless-enabled PDA, a pocket or palmtop computer, a WiFi phone (e.g., a Skype phone or VoIP phone), a WiFi appliance, a Sony PlayStation PSP or some other portable, network-enabled gaming station, a video screen, a digital camera, an audio player, a navigation device, a security camera, an alarm device, a wireless payment or POS device, etc.

The mobile router 12, as explained further hereinbelow, may act as a gateway between the wireless network 15 and a backhaul network 20. The backhaul network 20 in turn may be connected to the Internet 18 or any other network (such as an intranet or another WAN) via a gateway 24.

The mobile router 12 may communicate with the backhaul network 20 via a backhaul wireless communication link 22 (sometimes referred to hereinafter as the "backhaul wireless communication link"). The backhaul wireless communication link 22 may be provided by a wireless network that is part of the backhaul network 20, such as a cellular wireless network. The cellular wireless network may be, for example: a Global

System for Mobile Communications/General Packet Radio Service (GSM/GPRS) link; a UMTS (Universal Mobile Telecommunications System) link; a Code Division Multiple Access (CDMA) link; an Evolution-Data Optimized (EV-DO) link; an Enhanced Data Rates for GSM Evolution (EDGE) link; a 3GSM link; a Digital Enhanced Cordless Telecommunications (DECT) link; a Digital AMPS (IS-136/TDMA) link; an Integrated Digital Enhanced Link (iDEN) link; a WiMAX link; or any other suitable wireless link. That way, the mobile router 12 may provide wireless access for the mobile device 16 to the Internet 18 (or other desired network).

According to various embodiments, the mobile router 12 and the mobile device 16 are co-located in a moving vehicle so that mobile router 12 is mobile and so that end-users of the mobile device 16 can enjoy wireless connectivity to the Internet 18 via the mobile router 12 as the vehicle (not shown) moves through cells or nodes associated with the wireless network 22. The moving vehicle could be, for example, a car, a truck, a bus, a boat, a train or rail car, etc. The mobile router 12 may be mounted to the vehicle in a secure and generally tamper-resistant location. For example, the mobile router 12 may be mounted in the trunk of an automobile, and the end-user of the mobile device 16 may be a passenger or driver of the automobile. That way, the end-user could enjoy wireless connectivity as the automobile moves between cells of the wireless network 22.

Also, although only one mobile device 16 is shown in communication with the mobile router 12 in Figure 1, it should be noted that numerous mobile devices 16 may be in communication with the mobile router 12 via the network 14. For example, in a scenario where the mobile router 12 is routed in an automobile, more than one passenger may be using an end-user mobile device 16 that communicates with the Internet 18 (or some other network) via the mobile router 12 and the backhaul network 20. For example, one passenger could be checking email on a palmtop computer device, while another passenger may be surfing the World Wide Web, etc.

It should also be recognized, however, that the mobile router 12 does not necessarily need to be installed in, affixed to, or otherwise placed in a mobile vehicle. For example, a user could use the mobile router 12 at home, work, or any other stationary location, or carry the mobile router 12 around with him/her.

As shown in Figure 1, a transceiver 30 may receive and transmit the wireless signals to the mobile router 12 via the wireless communication link 22. A communication network 32 of the backhaul network 20 may communicate with the Internet 18 (or other network) via one or more gateways 24. The communication network 32 may include conventional

network elements such as servers, routers, switch, etc., and may provide wireless network service for the mobile router 12. Of course, although only one transceiver 30 is shown in Figure 1, it should be recognized that the backhaul network 20 may comprise a number of such transceivers, located in different areas serviced by the backhaul network 20, such that the mobile router 12 may stay in communication with the backhaul network 20 as the mobile router 12 moves between cells or nodes of the backhaul network 20.

As shown in Figure 1, third party servers 26 may be in communication with the Internet (or other network) 18. That way, the mobile device 16 can access the third party servers 26 through the mobile router 12 and the backhaul network 20.

Figure 2 is a simplified block diagram of the mobile router 12 according to various embodiments of the present invention. As shown in Figure 2, the mobile router 12 may comprise one or more processors 40, one or more memory units 42, a backhaul network interface 44, and a local network interface 46, that may be connected via a system bus 48.

The backhaul network interface 44 is for interfacing with the backhaul network 20. The local network interface 26 for interfacing with the wireless network 15. The type of backhaul network interface 44 may depend on the types of backhaul wireless communication link 22 used. For example, the backhaul interface network 44 may be a GSM/GPRS interface, a UTMS interface, an EDGE interface, a Wi-MAX interface, etc. Similarly, the type of local network interface 46 may depend on the type of wireless network 15 used. For example, the local network interface 15 may be a Wi-Fi, Wi-MAX, or Bluetooth interface.

The processor(s) 40 may execute instruction code stored in the memory 42. The memory 42 may be embodied as one or more computer-readable media, including Read-Only-Memory (ROM) and/or Random-Access-Memory (RAM). As such, the memory 42 may comprise one or more memory chips, optical memory devices (e.g., CD-ROM), magnetic memory devices (e.g., disk drives), etc. The memory 42 may include a number of software modules, including a routing module 50, a link monitor module 52, a session proxy module 54 and a serial port data publisher module 56, that may be implemented as software code to be executed by the processor(s) using any suitable computer instruction type. The software code may be stored as a series of instructions or commands, or as a program, in the memory 42.

The routing module 50 may include the code for allowing the mobile router 12 to route data packets from the wireless network 15 to the backhaul network 20, and vice versa, as is known in the art. The link monitor module 52, as explained further below, may

monitor the layer 2 (data link or cellular layer) and layer 3 (IP or network layer) links of the mobile router 12 with the backhaul network 20 by sending test or probing data packets. By monitoring the packets, the link monitor module 52 can detect if either (or both) of the links fails. That way, the mobile router 12 can take appropriate action when one of the links fails.

According to various embodiments, both the local wireless communication link 14 and the backhaul wireless communication link 22 may use the TCP (Transmission Control Protocol) transport protocol for the session layer of the network protocols. TCP is one of the core protocols of the Internet protocol suite, often simply referred to as "TCP/IP." Using TCP, applications on networked hosts can create connections to one another, over which they can exchange streams of data using stream sockets. Stream sockets are a type of internet socket which provides a connection-oriented, sequenced, and unduplicated flow of data without record boundaries. The TCP protocol guarantees reliable and in-order delivery of data from sender to receiver.

The TCP protocol also uses a network congestion avoidance algorithm in order to achieve congestion avoidance. A number of such algorithms exists and can be used. In general, according to some algorithms, the TCP protocol specifies a maximum segment size (MSS). The sender maintains a congestion window, limiting the total number of unacknowledged packets that may be in transit end-to-end. To avoid congestion collapse, TCP makes a slow start when the connection is initialized and after a timeout. It starts with a window of 2 MSS. Although the initial rate is low, the rate of increase is very rapid: for every packet ACKed, the congestion window increases by 1 MSS so that for every round trip time, the congestion window has doubled. When the congestion window exceeds a threshold, or a packet is lost, the algorithm enters a new state, called congestion avoidance. As long as non-duplicate ACKs are received, the congestion window is additively increased by one MSS every round trip time. When a packet is lost, duplicate ACKs will be received. The congestion window is reduced to 1 MSS on a timeout event.

The session proxy module 54, as explained further below, may act as a TCP proxy for all TCP sessions going through the mobile router 12. That way, according to various embodiments as described below, all end-user traffic between the end-user mobile device 16 and the destination (e.g., a server connected to the Internet or other network 18) may be transparently routed through the mobile router 12. Of course, in other embodiments, the local and backhaul wireless links 14, 22 may use a different transport protocol, and, in such embodiments, the the session proxy module 54 may similarly act as a proxy for such other transport protocol sessions.

The serial port data publisher module 56 may make data received from a serial device 36, connected to a serial port 38 of the mobile router 12, available from the mobile router 12 via a TCP stream (or any other type of data stream available from the mobile router 12).

Other, conventional components of a router, such as a memory controller, are not illustrated in Figure 2 for the sake of convenience.

As mentioned before, the link monitor module 52 may monitor the mobile router's layer 2 (data link or cellular layer) and layer 3 (IP or network layer) links with the backhaul network 20. That way, when the link monitor module 52 detects a drop-off, the link monitor module 52 can reestablish the link as quickly as possible in order to minimize the interruption in service to the end user. For example, in typical present-day mobile computing scenarios, when the network drops off, the end-user's applications and network sessions are ordinarily terminated. Consequently, the user has to restart the applications and/or session when the network connection is reestablished. Moreover, it typically is not predictable when the network connection will be reestablished.

The link monitor module 52 overcomes these drawbacks by monitoring the layer 2 and 3 links, and reestablishing the connections when connectivity is lost. As explained in more detail below, the link monitor module 52 may do this by sending and monitoring test (or probing) data packets over the backhaul wireless communication link 22. When it detects a failure in one or both of the links, the link monitor module 52 can take remedial action, such as attempting to reestablish the link. It may reestablish the link before applications on the mobile device 16 have to be restarted. That way, the user does not have to restart his/her applications or sessions. The user just typically notices that the applications/sessions slowed for a brief period of time while the connection was being reestablished.

The link monitor module 52 may utilize adaptive programming according to various embodiments. That is, for example, if the backhaul network interface 44 is receiving packets over the backhaul wireless communication link 22, the link monitor module 52 may send less probing packets and, conversely, if the interface 44 is not receiving packets the link monitor module 52 may send more probing packets. By monitoring packets coming in on the interface 44, the link monitor module 52 may draw the assumption that the interface is functioning. This means that the link monitor module 52 does not have to send test packets across the backhaul wireless communication link 22 to verify connectivity (and hence not wasting precious network resources). However, just because the link monitor

module 52 may assume that the interface 44 is functioning does not mean that the link monitor module 52 does not send test packets; it may just send them less frequently in certain embodiments.

The link monitor module 52 may monitor the interface 44 to see if it is receiving data packets. If it is not, then the link monitor module 52 may sleep "A" number of seconds and then proceed to the next step of doing an active probe. If the interface 44 is receiving packets, the link monitor module 52 may then sleep longer (e.g., 10 x A seconds) before it proceeds to the next step of doing an active probe. So if the backhaul wireless communication link 22 looks like it is working, then the link monitor module 52 may send fewer active probes on the backhaul network 20.

The remote devices that the link monitor module 52 is to monitor may be configured to allow the link monitor module 52 to ensure whether the link to the particular remote device is available. For example, links to the default route, domain name server (DNS), and/or authentication server 19 (see Figure 1) may be monitored, as well as any device other device on the Internet so configured.

Figure 3 is a flow chart of the process flow of the link monitor module 52 according to various embodiments of the present invention. This process may be continually running in the background to monitor the layer 2 and layer 3 links on the backhaul wireless communication link 22 of the mobile router 12.

At block 80, the link monitor module 52 may determine what its backhaul network 20 is (e.g. whether it is a GSM/GPRS network interface, a UTMS network interface, etc.). Next, at block 82, the link monitor module 52 may determine if the appropriate backhaul network driver is loaded. If not, at block 96, the driver is reloaded and, if successful, the process returns to block 92 (described further below). If at block 82 it is determined that the driver is loaded, the process advances to block 84, where the link monitor module 52 determines whether packets are being received on the backhaul network interface 44. This is a check of its layer 3 -- or network layer – status (OCI Model). If so, the process advances to block 86, where the link monitor module 52 goes into sleep mode for a brief period of time (xx seconds) because the network connection is active.

If at block 84 it is determined that packets are not being received over the backhaul wireless connection 22, the process advances to block 88, where the link monitor module 52 may determine if the layer 2, or data link layer, is established with a particular remote device (e.g., a device that is part of the communications network 32 or connected to the Internet 18). In one embodiment, the point-to-point protocol ("PPP") may be used for the

layer 2 link (OCI Model). PPP is a protocol used to establish a direct connection between two nodes and is described by described by Internet Engineering Task Force (IETF) RFC 1661. Thus, at block 88, the link monitor module 52 may determine of the PPP link is established. Of course, in other embodiment, a different direct link protocol could be used.

If the PPP link is not established, the process may advance to block 92, where the PPP is restarted to establish the PPP link to the remote device. If that operation is successful, or if at block 88 it is determined that the PPP link is established, the process advances to block 90 where the link monitor module 52 determines if it has a default route to the remote device. In routing technology, a default route, also sometimes called a "gateway of last resort," is the network route used by a router when no other known route exists for a given data packet's destination address. All the packets for destinations not known by the router's routing table are sent to the default route. This route generally leads to another router, which treats the packet the same way. If the route is known, the packet will get forwarded to the known route. If not, the packet is forwarded to the default-route of the router which generally leads to another router, and so on. Once the router with a known route to a host destination is reached, the router determines which route is valid by finding the most specific match. The network with the longest subnet mask that matches the destination IP address wins.

Hence, the default route may be a connection to the remote device that is different from the direct connection. If there is a default route, the process may advance to block 94, where the link monitor module 52 may determine whether the remote device is reachable via the default route. If, at block 90 it is determined that there is no default route, the process may return to block 88 where the PPP link is attempted to be established.

The process also advances to block 90 from block 86 after the brief sleep period. If at block 90 it is determined that the mobile router 12 has a default route, the process advances to block 94 where the link monitor module 52 determines if the default route is reachable. If the default route is not reachable, the process returns to block 88, wherein the PPP link is attempted to be reestablished.

If at block 92 the PPP protocol is unable to be restarted after x number of attempts, the process advances to block 96, where the card driver for the backhaul network interface 44 is reloaded. If at block 66 the card driver is not successfully loaded after a number ("x") of attempts, the process advances to block 98, where the link monitor module 52 attempts to reload the CardBus driver (or other similar driver for mobile routers that do not use CardBus). A CardBus is PCMCIA (Personal Computer Memory Card International

Association) 5.0 or later (e.g., JEIDA 4.2 or later) 32-bit PCMCIA card. CardBus is effectively a 32-bit, 33 MHz PCI (Peripheral Component Interconnect) bus in the PC card form factor. CardBus includes bus mastering, which allows a controller on the bus to talk to other devices or memory without going through the CPU.

If that process is successful, the process returns to block 96, where the card driver is again attempted to be reloaded. If at block 98 attempts are unsuccessful in reloading the CardBus driver (or other similar driver), the process, according to various embodiments, advances to block 100, wherein the mobile router 12 is rebooted. From there, the process may return back to block 80.

Returning to block 94, where it is determined if the default route is reachable, if it is not available, the process may advance, according to various embodiments, to block 102, where the domain name server (DNS) for the mobile router is determined. Then, at block 104, it is determined whether the DNS is reachable. If it is, according to various embodiments, at block 106, the authentication server 19 (see Figure 1) for the mobile router 12 is determined. Then, at block 108, it is determined whether the authentication server 19 is reachable. If so, the process advances to block 110, where the link monitor module 52 enters brief sleep mode, during which no test packets are sent. After the brief sleep, the process returns to block 84 for a re-check of the layer 3 link.

If the DNS server is not reachable at block 104 or if the authentication server is not reachable at block 108, the process returns to block 88, where the PPP link (layer 2 link) is assessed, as explained above.

Some parameters in the process may be configurable. For example, certain time periods used by the various timers may be configurable. The parameters may be factory configurable, remotely configurable over a network, and/or self-adapting. In addition, in various embodiments, the user may be able to configure certain parameters.

In addition, the process can be fine-tuned and optimized for a particular backhaul network and/or usage pattern. The objective of the tuning and optimization may be to deliver the highest data throughput, fastest network drop-off detections, and fastest network reconnection. For example, the targets being probed can be changed. For example, the mobile router 12 may probe the session manager 29 in a network operations center (NOC) 30 (see Figure 1), or other devices connected to the network 18. Also, rather than active probing, the mobile router 12 may only listen to the backhaul network interface 44. This latter approach may be advantageous when the network 18 is a WAN (or other type of network) with low bandwidth.

The point-to-point protocol ("PPP") startup script may execute continuously until it makes a successful connection. The failure that is shown in Figure 3 at block 88 is if the PPP startup script is not successful in communicating with the backhaul network card x number of times. If the PPP startup script cannot make a connection it likely is because the mobile router 12 is out of coverage and not because it or the network failed. However, if PPP connection is unable to be established after a relatively long duration (e.g., over one hour), the link monitor module 52 may proceed with the failure path (step 92).

A common problem experienced in the prior art by cellular network users is that the data connection is sometimes lost. When this occurs, applications running on the mobile device (that is connected to the cellular network) stop running, and have to be restarted when the TCP session is re-established.

This problem can be overcome by the session proxy module 54 of the mobile router 12. Returning to Figure 2, the session proxy module 54 may act as a session proxy for all sessions (e.g., TCP sessions) going through the mobile router 12. That is, for example, when a local end-user seeks to establish a TCP session from their local end-user device (such as the mobile device 14 Figure 1) with a destination (such as a third party server 26 connected to the network 18, see Figure 1), the session proxy module 54 may terminate the TCP session coming from the mobile device 16 and, instead, establish a TCP (or some other protocol) session on the backhaul network interface 26 with the destination 26. The mobile router 12 may also maintain a separate TCP session with the mobile device 16 over the local wireless communication link 14. That way, all end-user traffic between the end-user and the destination may be transparently routed through the mobile router 12 on the two separate sessions. That way, one session going down (such as the backhaul wireless communication link 22) need not negatively affect the other session (such as the session between the mobile router 22 and the mobile device 16).

By doing this, several benefits may be achieved. For example, when the backhaul network link 22 goes down (which is sometimes not uncommon for cellular networks), the session proxy module 54 can maintain a TCP session to the local end user (e.g., at the mobile device 16). That way, if applications running on the mobile device 16 are dependent upon a TCP session, the applications may continue to run because there is a TCP session with the mobile router 12, even though the TCP session over the backhaul wireless communication link 22 is lost. When the backhaul network communication link 22 comes back, the end-user may be able to keep running its applications and session without having to restart the applications.

Another potential benefit is that when the backhaul network link 22 goes down, the session proxy module 54 can prevent the TCP session for the link to the mobile device 16 from starting its back-off timers. This is advantageous because, under the TCP protocol, the mobile device 16 would normally assume that it cannot forward packets because of network congestion and it would accordingly start to slow down the user's session. In contrast, with the session proxy module 54 maintaining a TCP session between the mobile router 12 and the mobile device 16, the mobile 16 device would not assume that network congestion is a problem and the TCP session between mobile router 12 and the mobile device 16 the should not slow down.

Another potential benefit is that the TCP timers and congestion windows can be adjusted dynamically so that the link is optimized for the particular characteristics of the backhaul network (e.g., packet loss, latency jitter, etc.). For example, if the network has a high packet loss, the MTU (maximum transmission unit) may be made smaller to increase the likelihood that sent data packets will successfully reach their destination. "MTU" refers to the size (in bytes) of the largest data packet that a given layer of a communications protocol can pass onwards. Alternatively, if the network has relatively little packet loss and high throughput, the MTU may be increased so as to further increase throughput.

In another embodiment, instead of a TCP session, the session proxy module 54 could establish a different type of protocol session with the user's destination that is designed to run over high latency links. Such high-latency links may be HS-TCP (High Speed TCP) or SCPS (Space Communications Protocol Specifications). HS-TCP uses a new congestion control algorithm for TCP that is described in RFC 3649. The SCPS is set of extensions to existing protocols and new protocols developed by the Consultative Committee for Space Data Systems (CCSDS). The SCPS protocol is defined in ISO Standards 15894 (file transfer), 15893 (transport layer), 15892 (security layer) and 15891 (network layer).

In such an embodiment, therefore, there may be a TCP session between the mobile device 16 and the mobile router 12 over the local wireless communication link 14, and a separate high latency protocol session (e.g., HS-TCP or SCPS) between the mobile router 12 and the destination over the backhaul network 20. Moreover, the establishment of the high-latency link on the backhaul network 20 may be done transparently to the local end-user by the session proxy module 54.

In addition, in various embodiments, the local end-user could be given the option of disabling the session proxy module 54. A user of the mobile device 16 may disable the

session proxy module 54, for example, through a control panel for the mobile router 12 displayed on the mobile device. Also, the mobile router 12 may have a switch or push-button that allows a user to disable the session proxy module 54. It may be desirable for a user to disable the session proxy module 54 when the user wants to maintain a TCP session with the destination. For example, certain types of virtual private networks (VPNs), such as IPSEC VPNs, encrypt the TCP headers. IPSEC (IP security) is a suite of protocols for securing Internet Protocol (IP) communications by authenticating and/or encrypting each IP packet in a data stream. If the TCP headers were encrypted, the session proxy module 54 would ordinarily not be able to decrypt the headers of the TCP data packets and, therefore, could not appropriately transmit the packets on a non-TCP session. In such a circumstance, the user may desire to disable the session proxy module 54. Other types of VPNs, however, such as secure sockets layer (SSL) VPNs, do not encrypt the TCP headers, so the local end-user may not want or need to disable the session proxy module 54 when such a SSL VPN is being used.

Referring to Figure 2, the serial port data publisher module 56 may take data received from the serial device 36 connected to the serial port 38 of the mobile router 12 and make the data available via a TCP stream (or some other type of data stream, such as HS-TCP or SCPS data stream). The serial port data publisher module 56 and, via the backhaul network 20 and Internet 18, populate a remote database 25 with the data from the device 36. That way, the data from the serial device 36 can be remotely accessed via the Internet 18.

The serial device 36 may communicate with the mobile router 12 using any suitable serial data protocol, including the USB (Universal Serial Bus) standard, the RS-232 standard, the RS-485 standard, or the IEEE 1394 (FireWire) standard, for example.

The serial device 36 may be any suitable type of serial device, such as, for example, a GPS receiver. In an embodiment where the serial device 36 is a GPS receiver, this allows the location data for the GPS receiver (and hence the location data for the mobile router 12) to be remotely accessible by others. In an application where the mobile router 12 is installed in a mobile vehicle such as a car or truck, such location data could be used for a variety of applications, including:

- a company could access the database 25 to determine the current location of its vehicles;

- a company could determine and analyze where its vehicles have been, including such things as determining time spent in traffic jams, loading docks, etc.;
- track a stolen vehicle;
- determining optimal routes for delivery companies;
- collection of real-time traffic data, which can be analyzed and/or shared with traffic condition publication services; or
- collection of historical traffic data, which could be used for traffic planning purposes.

In various embodiments, the stream produced by the serial port data publisher module 56 may be compliant with a protocol standard, such as the RFC 2217 "Telnet Com Port Control Option" protocol, so that end-user devices that support the standard could use the data. This may be useful for Windows-based computers, because such computers could use standard, off-the-shelf mapping applications with a GPS device to be attached to the local machine. The end-user could install a RFC 2217 compliant driver on their Windows computer and could make the GPS data from the mobile router 12 appear as local GPS data on their Windows computer. And since the GPS data from the mobile router 12 would be accessible over an IP network (e.g., the Internet 18), the remote user's Windows computer could access the data from anywhere on the Internet.

The above-described examples were based on a GPS device as the serial device 36 connected to the mobile router 12. It should be recognized that other types of serial data devices 36 may be used and similar data publication processes could be used for such serial data devices so that the data from the serial device may be accessed via the Internet (or other network) 18. For example, in other embodiments the serial device 36 may be a vehicle telematics device. Such a vehicle telematics device may capture data regarding the performance and operation of the vehicle (e.g., diagnostic data) in which the device is installed. Such data may then be published by the mobile router 12 and stored in the database 25, for example, such that it is accessible by third parties via the Internet 18.

In another embodiment, the serial device 36 may be a point-of-sale (POS) device that captures sale or payment information. That way, the POS data may be published to the database 25 such that it is accessible via the Internet 18.

In other embodiments, the serial data device 36 could be, for example, a remote control for an in-car entertainment system (e.g., downloading music, video, games, etc., to

third party systems) or a device for interfacing to existing communication systems (e.g., police radios, etc.).

In addition, rather than transmitting the data to a central server (e.g., database 25), a remote user could access the mobile router 12 to access the data from the serial device 36 directly. For example, in one embodiment, an authenticated remote user could access an authentication server 23 (see Figure 1) to determine the address of the mobile router 12. The remote user could then use that address to communicate with the mobile router 12 directly. Similarly, a local end-user of the mobile router 12 could access the data from the serial device via the local wireless network 14.

Additionally, according to various embodiments, the serial interface 38 of the mobile router 12 can be used to output data/command signals to the connected serial device 36. For example, from a remote location a signal/message can be sent to the mobile router 12 in order to have the signal/message sent output by the serial port 38 to the serial device, where the signal/message causes the serial device 36 to take some sort of action. For instance, the signal/message may activate the serial device 36. For example, where the mobile router 12 is installed in a car, the serial device 36 may be device capable of controlling components and/or systems of the car. For example, the serial device 36 may be able to shut of the engine (such as in the case of theft), unlock the doors in case of inadvertent locking, activate alarm functions, etc. The serial device 36 may also, according to various embodiments, perform payment functions, download data, receive advertising, entertainment, gaming, and/or information, as well as perform network management and control.

While various embodiments of the present invention have been described herein, it should be recognized that other modifications, substitutions and alternatives may be apparent to one of ordinary skill in the art. For example, certain of the steps of Figure 3 may be performed in different order or simultaneously. Such modifications, substitutions and alternatives can be made without departing from the spirit and scope of the invention.

CLAIMS

What is claimed is:

1. A mobile router comprising:

a local network interface for wirelessly communicating with a mobile device via a local wireless network;

a backhaul network interface for wirelessly communicating with a backhaul network;

one or more processors;

a serial data device interface for communicating with a serial data device connected to the interface; and

a memory in communication with the one or more processors and the serial data device interface, wherein the memory stores instructions which, when executed by the one or more processors, cause the one or more processors to transmit data received from the serial data device over the backhaul network to a destination device.

2. The mobile router of claim 1, wherein:

the serial data device connected to the serial data device interface comprises a GPS receiver; and

the data transmitted by the mobile router over the backhaul network to the destination device comprises location data from the GPS receiver.

3. The mobile router of claim 1, wherein the serial data device comprises a serial data device selected from the group consisting of a GPS receiver, a vehicle telematics device, a point-of-sale (POS) device, and a remote control.

4. The mobile router of claim 1, wherein the memory additionally stores instructions which, when executed by the one or more processors, cause the one or more processors to:

monitor the layer 2 and layer 3 links of the mobile router for the backhaul network; and

reestablish the network connection to the backhaul network when a failure of the layer 2 and/or layer 3 link is detected.

5. The mobile router of claim 4, wherein the memory stores instructions which, when executed by the one or more processors, cause the one or more processors to monitor the

layer 2 and layer 3 links by sending test packets to a destination device over the backhaul network.

6. The mobile router of claim 5, wherein the memory stores instructions which, when executed by the one or more processors, cause the one or more processors to adapt the frequency at which test packets are sent to the destination device based on whether the network connection to the backhaul network is active.

7. The mobile router of claim 6, wherein the memory stores instructions which, when executed by the one or more processors, cause the one or more processors to send test packets to the destination device less frequently when the network connection to the backhaul network is active.

8. The mobile router of claim 1, wherein the memory additionally stores instructions which, when executed by the one or more processors, cause the one or more processors to:

detect an attempt by the mobile device to establish a transport protocol session between the mobile device and a destination device through the mobile router over the local wireless network and the backhaul network; and

initiate, when the attempt to establish the protocol session is detected, a first replacement transport protocol session between the mobile router and the mobile device over the local wireless network and a second replacement transport protocol session between the mobile router and the destination device over the backhaul network.

9. The mobile router of claim 7, wherein the memory additionally stores instructions which, when executed by the one or more processors, cause the one or more processors to:

detect an attempt by the mobile device to establish a transport protocol session between the mobile device and a destination device through the mobile router over the local wireless network and the backhaul network; and

initiate, when the attempt to establish the protocol session is detected, a first replacement transport protocol session between the mobile router and the mobile device over the local wireless network and a second replacement transport protocol session between the mobile router and the destination device over the backhaul network.

10. The mobile router of claim 1, wherein the local wireless network comprises a Wi-Fi network.

11. The mobile router of claim 1, wherein the local wireless network comprises a Wi-MAX network.

12. The mobile router of claim 1, wherein the backhaul network comprises a cellular network.

13. The mobile router of claim 12, wherein the cellular network comprises a GSM/GPRS network.

14. The mobile router of claim 12, wherein the cellular network comprises a UMTS network.

15. The mobile router of claim 9, wherein the backhaul network comprises a cellular network.

16. The mobile router of claim 15, wherein the cellular network comprises a GSM/GPRS network.

17. The mobile router of claim 15, wherein the cellular network comprises a UMTS network.

18. The mobile router of claim 15, wherein the local wireless network comprises a Wi-Fi network.

19. The mobile router of claim 15, wherein the local wireless network comprises a Wi-MAX network.

20. The mobile router of claim 1, wherein the mobile device is a wireless-enabled computer device selected from the group consisting of a laptop equipped with a wireless network interface card, a wireless-enabled PDA, a pocket computer, a WiFi phone, a WiFi

appliance, a portable, network-enabled gaming station, a video screen, a digital camera, an audio player, a navigation device, a security camera, an alarm device, a wireless payment device, and a wireless POS device.

21. The mobile router of claim 1, wherein the mobile router is installed in a vehicle.

22. The mobile router of claim 21, wherein the vehicle is a vehicle selected from the group consisting of an automobile, a truck, a rail car, a bus, and a boat.

23. A method comprising:

receiving, by a mobile router from a serial data device that is connected to a serial data device interface of the mobile router, data from the serial data device, wherein the mobile router is in communication with a mobile device via a local wireless communication link and wherein the mobile router is in communication with a backhaul network; and

transmitting, by the mobile router, the serial data received from the serial data device to a destination device over the backhaul network.

24. The method of claim 23, wherein:

the serial data device connected to the serial data device interface comprises a GPS receiver; and

transmitting the data comprises transmitting location data from the GPS receiver.

25. The method of claim 23, wherein the serial data device comprises a serial data device selected from the group consisting of a GPS receiver, a vehicle telematics device, a point-of-sale (POS) device, and a remote control.

26. The method of claim 23, further comprising:

monitoring the layer 2 and layer 3 links of the mobile router for the backhaul network; and

reestablishing the network connection to the backhaul network when a failure of the layer 2 and/or layer 3 link is detected.

27. The method of claim 26, wherein monitoring the layer 2 and layer 3 links comprises sending test packets to a destination device over the backhaul network.

28. The method of claim 27, further comprising adapting the frequency at which test packets are sent to the destination device based on whether the network connection to the backhaul network is active.

29. The method of claim 28, wherein adapting comprises sending test packets to the destination device less frequently when the network connection to the backhaul network is active.

30. The method of claim 23, further comprising:

detecting an attempt by the mobile device to establish a transport protocol session between the mobile device and a destination device through the mobile router over the local wireless network and the backhaul network; and

initiating, when the attempt to establish the protocol session is detected, a first replacement transport protocol session between the mobile router and the mobile device over the local wireless network and a second replacement transport protocol session between the mobile router and the destination device over the backhaul network.

31. The method of claim 29, further comprising:

detecting an attempt by the mobile device to establish a transport protocol session between the mobile device and a destination device through the mobile router over the local wireless network and the backhaul network; and

initiating, when the attempt to establish the protocol session is detected, a first replacement transport protocol session between the mobile router and the mobile device over the local wireless network and a second replacement transport protocol session between the mobile router and the destination device over the backhaul network.

32. The method of claim 23, wherein the local wireless network comprises a Wi-Fi network.

33. The method of claim 23, wherein the local wireless network comprises a Wi-MAX network.

34. The method of claim 23, wherein the backhaul network comprises a cellular network.

35. The method of claim 34, wherein the cellular network comprises a GSM/GPRS network.

36. The method of claim 34, wherein the cellular network comprises a UMTS network.

37. The method of claim 31, wherein the backhaul network comprises a cellular network.

38. The method of claim 37, wherein the cellular network comprises a GSM/GPRS network.

39. The method of claim 37, wherein the cellular network comprises a UMTS network.

40. The method of claim 37, wherein the local wireless network comprises a Wi-Fi network.

41. The method of claim 37, wherein the local wireless network comprises a Wi-MAX network.

42. The method of claim 23, wherein the mobile device is a wireless-enabled computer device selected from the group consisting of a laptop equipped with a wireless network interface card, a wireless-enabled PDA, a pocket computer, a WiFi phone, a WiFi appliance, a portable, network-enabled gaming station, a video screen, a digital camera, an audio player, a navigation device, a security camera, an alarm device, a wireless payment device, and a wireless POS device.

43. The method of claim 23, wherein the mobile router is installed in a vehicle.

44. The method of claim 43, wherein the vehicle is a vehicle selected from the group consisting of an automobile, a truck, a rail car, a bus, and a boat.

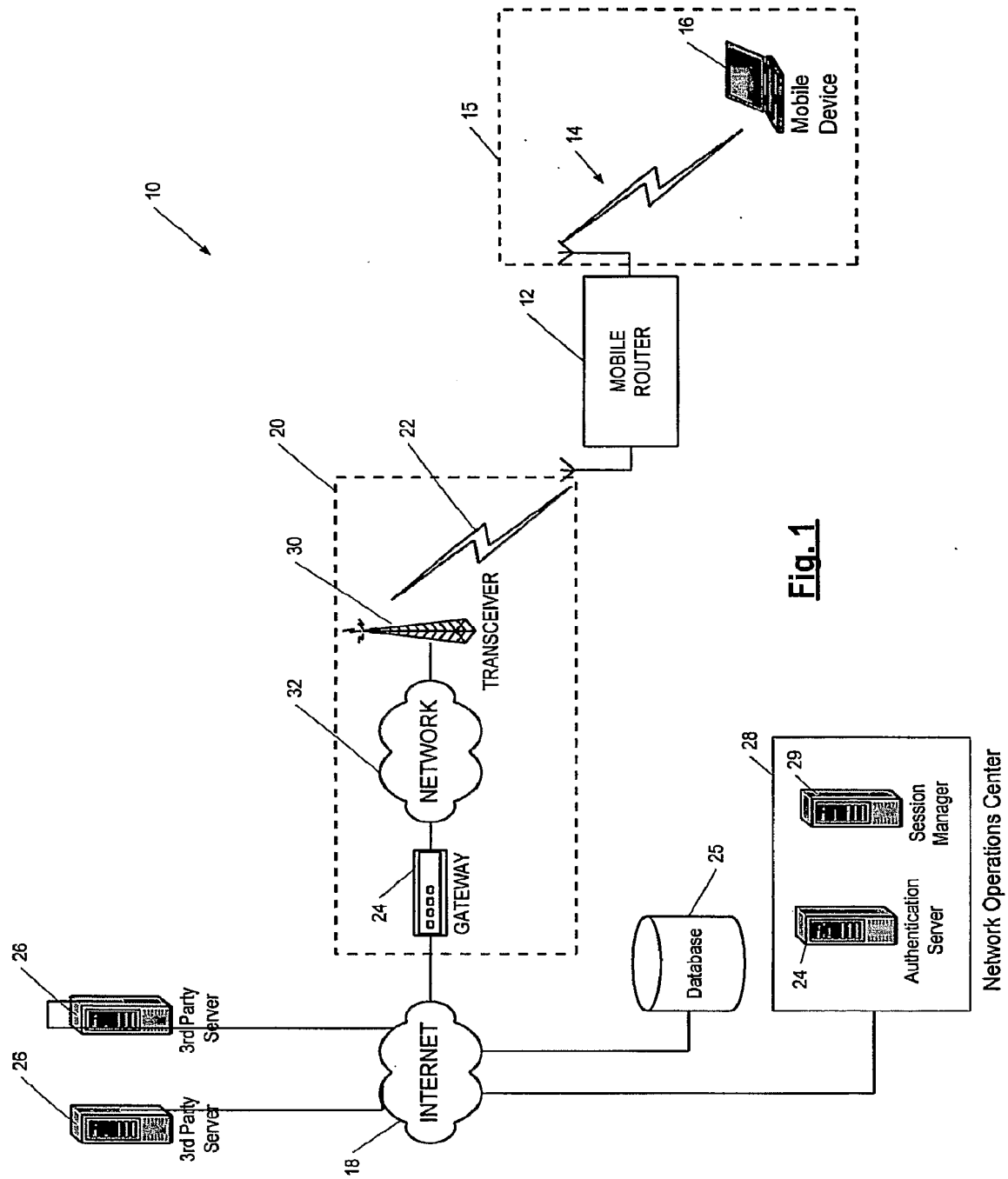
10
15
16
Mobile Device
14
12
MOBILE ROUTER
20
22
30
TRANSCEIVER
32
NETWORK
24
GATEWAY
25
Database
28
29
Session Manager
24
Authentication Server
Network Operations Center
26
3rd Party Server
26
3rd Party Server
18
INTERNET

Fig. 1

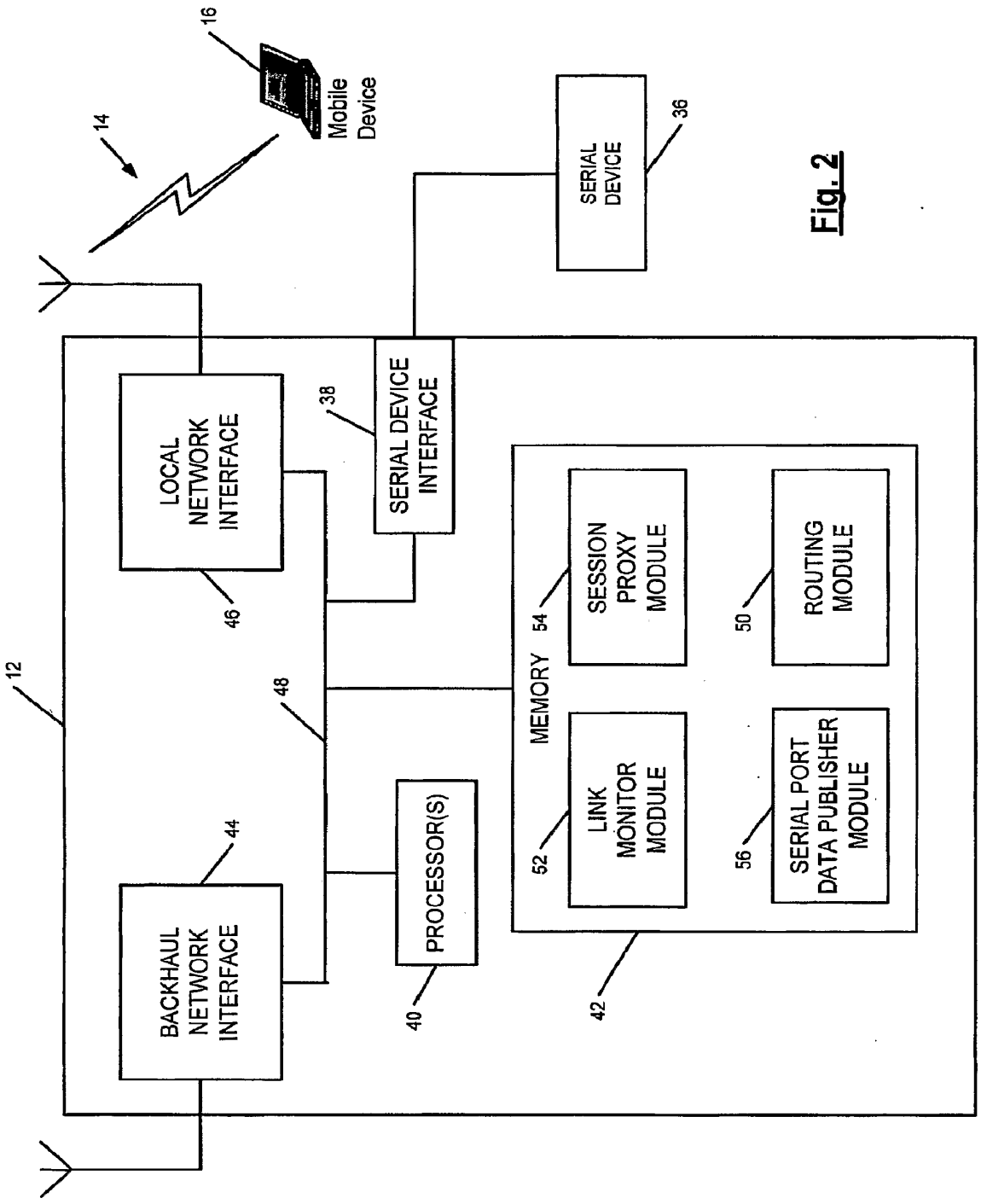
16
Mobile Device
14
SERIAL DEVICE
36
12
LOCAL NETWORK INTERFACE
46
38
SERIAL DEVICE INTERFACE
48
MEMORY
54
SESSION PROXY MODULE
50
ROUTING MODULE
52
LINK MONITOR MODULE
56
SERIAL PORT DATA PUBLISHER MODULE
42
PROCESSOR(S)
40
44
BACKHAUL NETWORK INTERFACE

Fig. 2

FIG. 3

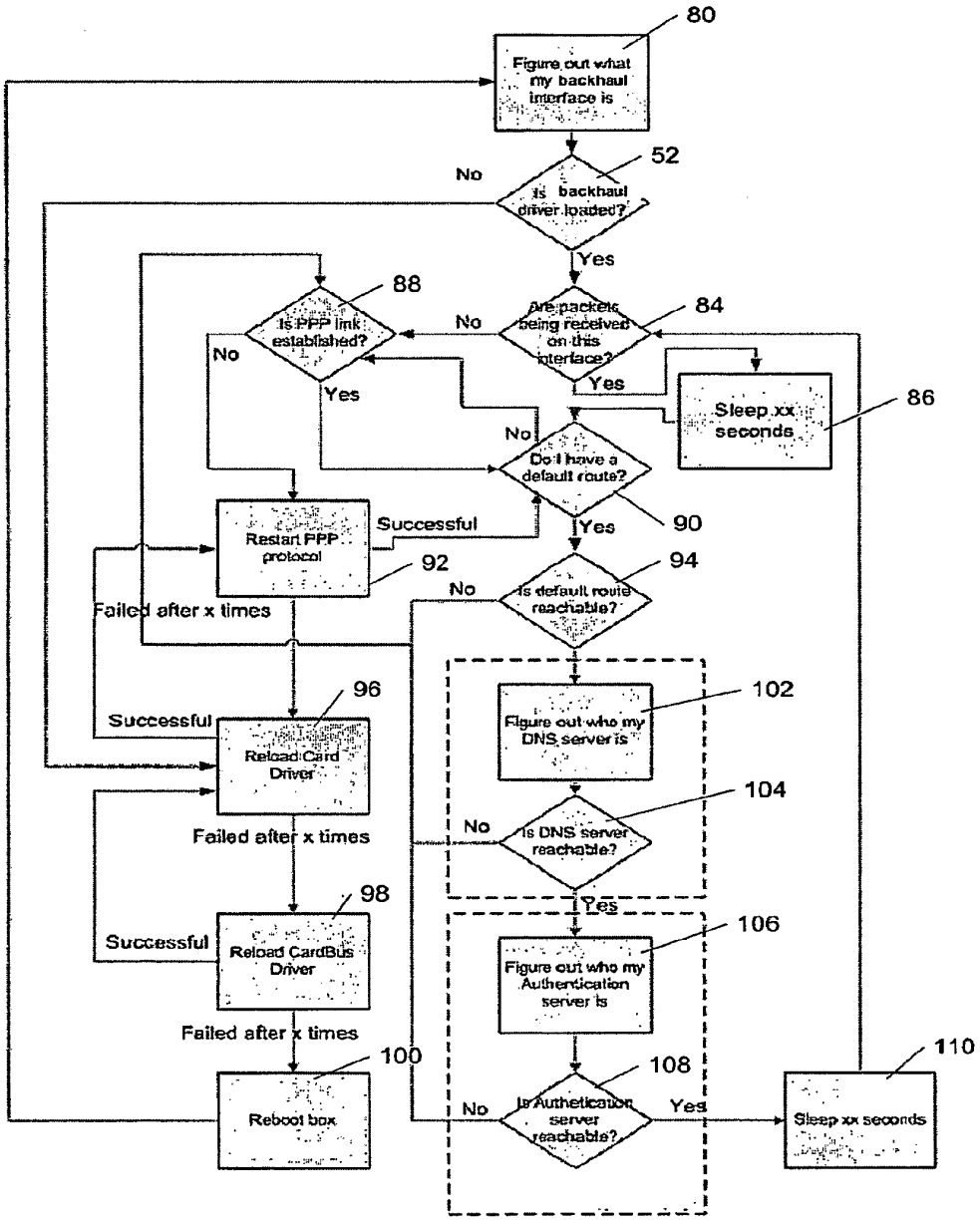
80
Figure out what my backhaul interface is
52
Is backhaul driver loaded?
No
Yes
88
Is PPP link established?
No
Yes
84
Are packets being received on this interface?
No
Yes
86
Sleep xx seconds
No
Do I have a default route?
Yes
90
Restart PPP protocol
Successful
92
Failed after x times
No
94
Is default route reachable?
96
Successful
Reload Card Driver
Failed after x times
102
Figure out who my DNS server is
104
No
Is DNS server reachable?
Yes
98
Successful
Reload CardBus Driver
Failed after x times
106
Figure out who my Authentication server is
100
Reboot box
108
No
Is Authetication server reachable?
Yes
110
Sleep xx seconds

(12) INTERNATIONAL APPLICATION PUBLISHED UNDER THE PATENT COOPERATION TREATY (PCT)

(19) World Intellectual Property Organization
International Bureau

(43) International Publication Date
20 March 2008 (20.03.2008)

PCT

(10) International Publication Number
WO 2008/033478 A1

(51) International Patent Classification:
H04M 1/60 (2006.01) *H04M 1/253* (2006.01)

(21) International Application Number:
PCT/US2007/019958

(22) International Filing Date:
13 September 2007 (13.09.2007)

(25) Filing Language: English

(26) Publication Language: English

(30) Priority Data:
11/522,195 15 September 2006 (15.09.2006) US

(71) Applicant *(for all designated States except US)*: **PLANTRONICS, INC.** [US/US]; 345 Encinal Street, Santa Cruz, CA 95060 (US).

(72) Inventors; and

(75) Inventors/Applicants *(for US only)*: **REUSS, Edward** [US/US]; 66 Hollins Drive, Santa Cruz, CA 95060 (US). **BROWN, William** [CA/US]; 164 Frederick Street, Santa Cruz, CA 95062 (US). **FILIMON, Cristian** [US/US]; 5253 War Wagon Court, San Jose, CA 95136 (US). **ALTMANN, Alan** [US/US]; 80 Kent Place, Palo Alto, CA 94301 (US). **GILES, Rick** [US/US]; 501 Park Meadow Drive, San Jose, CA 95129 (US).

(74) Agent: **RODRIGUEZ, Michael**; Plantronics, Inc., 345 Encinal Street, Santa Cruz, CA 95060 (US).

(81) Designated States *(unless otherwise indicated, for every kind of national protection available)*: AE, AG, AL, AM, AT, AU, AZ, BA, BB, BG, BH, BR, BW, BY, BZ, CA, CH, CN, CO, CR, CU, CZ, DE, DK, DM, DO, DZ, EC, EE, EG, ES, FI, GB, GD, GE, GH, GM, GT, HN, HR, HU, ID, IL, IN, IS, JP, KE, KG, KM, KN, KP, KR, KZ, LA, LC, LK, LR, LS, LT, LU, LY, MA, MD, ME, MG, MK, MN, MW, MX, MY, MZ, NA, NG, NI, NO, NZ, OM, PG, PH, PL, PT, RO, RS, RU, SC, SD, SE, SG, SK, SL, SM, SV, SY, TJ, TM, TN, TR, TT, TZ, UA, UG, US, UZ, VC, VN, ZA, ZM, ZW.

(84) Designated States *(unless otherwise indicated, for every kind of regional protection available)*: ARIPO (BW, GH, GM, KE, LS, MW, MZ, NA, SD, SL, SZ, TZ, UG, ZM, ZW), Eurasian (AM, AZ, BY, KG, KZ, MD, RU, TJ, TM), European (AT, BE, BG, CH, CY, CZ, DE, DK, EE, ES, FI, FR, GB, GR, HU, IE, IS, IT, LT, LU, LV, MC, MT, NL, PL, PT, RO, SE, SI, SK, TR), OAPI (BF, BJ, CF, CG, CI, CM, GA, GN, GQ, GW, ML, MR, NE, SN, TD, TG).

Published:
— *with international search report*
— *before the expiration of the time limit for amending the claims and to be republished in the event of receipt of amendments*

(54) Title: WIRELESS VOIP HEADSET WITH CALL ORIGINATION CAPABILITY

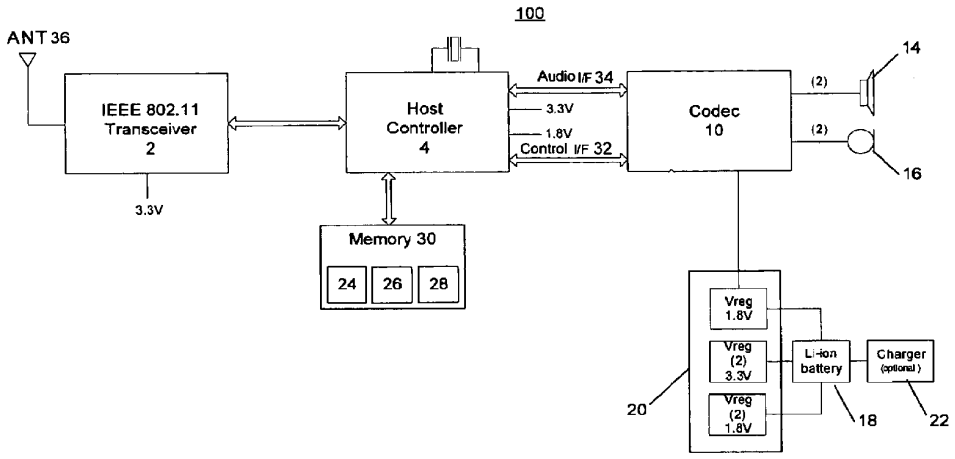

(57) Abstract: Systems and methods for a wireless VoIP headset. A wireless VoIP headset including a speaker, microphone, controller for processing a digital audio signal to generate IP packets, and an IEEE 802.11 transceiver. The wireless VoIP headset includes a computer readable memory storing instructions that when executed by the controller cause the wireless VoIP headset to perform a method for originating a call. The method includes receiving a spoken name or number from a user at the microphone, interpreting the spoken name or number using embedded or server based voice recognition, comparing the spoken name or number to a directory stored in the computer readable memory, and generating a call origination request message. The directory may also be stored on an adjunct computing device.

WO 2008/033478 A1

WIRELESS VOIP HEADSET WITH CALL ORIGINATION CAPABILITY

BACKGROUND OF THE INVENTION

[0001] The use of Voice over Internet Protocol (VoIP) is a fast growing trend in the telephony industry, displacing circuit switch analog and digital telecom systems. Voice over Internet Protocol transmits voice over a data network utilizing Internet Protocol (IP) data packets. In VoIP, analog speech signals received from an audio source are digitized, compressed, and translated into IP packets for transmission over an IP network such as the Internet. Some benefits of VoIP include cost savings and new applications. For example, VoIP can be used to bypass the toll structure imposed by the service providers that operate the PSTN or combined with other Internet services such as embedding voice mail messages into user e-mail. Typically, in a business environment a VoIP phone connects to the corporate data network through an Ethernet connection, either wired (IEEE 802.3) or wireless (IEEE 802.11).

[0002] The proliferation of IEEE 802.11 WiFi networks extends the reach of VoIP solutions into wireless edge devices. In the prior art, wireless VoIP handsets are examples of wireless edge devices that have been developed. However, such devices are neither handsfree or discreet. Most wireless VoIP telephones are rather large, having either a handset form factor or being a laptop based softphone. In the prior art, IEEE 802.11 based headsets have been demonstrated, but lack the ability to originate calls. Thus, they are not a true telephone and have limited utility.

[0003] As a result, there is a need for improved methods and apparatuses for wireless VoIP telephone devices.

BRIEF DESCRIPTION OF THE DRAWINGS

[0004] The present invention will be readily understood by the following detailed description in conjunction with the accompanying drawings, wherein like reference numerals designate like structural elements.

[0005] **FIG. 1** illustrates a simplified block diagram of a wireless VoIP headset in one example of the invention.

[0006] **FIG. 2** illustrates a system view of a wireless VoIP headset in use in one example of the invention.

[0007] **FIG. 3** illustrates a system view of a wireless VoIP headset in use with server based voice recognition in a further example of the invention.

[0008] **FIG. 4** illustrates a system view of a wireless VoIP headset in use with an adjunct computing device in a further example of the invention.

DESCRIPTION OF SPECIFIC EMBODIMENTS

[0009] Methods and apparatuses for wireless VoIP telephones in a headset form factor are disclosed. The following description is presented to enable any person skilled in the art to make and use the invention. Descriptions of specific embodiments and applications are provided only as examples and various modifications will be readily apparent to those skilled in the art. The general principles defined herein may be applied to other embodiments and applications without departing from the spirit and scope of the invention. Thus, the present invention is to be accorded the widest scope encompassing numerous alternatives, modifications and equivalents consistent with the principles and features disclosed herein. For purpose of clarity, details relating to technical material that

is known in the technical fields related to the invention have not been described in detail so as not to unnecessarily obscure the present invention.

[0010] The invention relates to the general field of Voice over Internet Protocol and more specifically, to a wireless VoIP telephone device in the form factor of a headset. This description describes a method and apparatus for a wireless VoIP headset with call origination functionality, allowing complete handsfree communication. In one example, the wireless VoIP headset allows for call origination using embedded voice recognition and self-contained directory. In a further example, the wireless VoIP headset allows for call origination by automatically originating a call to a voice recognition server. In a further example, the wireless VoIP headset allows for call origination by receiving call data from an associated wireless adjunct device.

[0011] The wireless VoIP headset telephone can allow handsfree communication throughout an enterprise wherever there is wireless LAN access. Unlike point-to-point devices, such as DECT based headsets, there are no range limitations. By incorporating call origination capabilities, the headset device becomes a full telephone rather than a simple peripheral to a desk or mobile phone. The wireless VoIP headset has an IP address, either fixed or dynamically assigned using a protocol such as DHCP, and resides on the packet network, potentially having access to the Internet with all its resources, enabling future applications that draw on the information available on the Internet. Example use cases include the ability to originate and receive phone calls discreetly through local hot spots or other Wi-Fi enabled locations. Multimedia versions of the VoIP headset telephone can incorporate streaming audio access from the Internet or local computer.

[0012] In one example of the invention, a wireless VoIP headset includes a speaker, a microphone, an IEEE 802.11 transceiver, and a codec for converting an analog audio signal to a digital audio signal and encoding the digital audio signal. The codec also decodes a receive digital audio signal for output to the speaker. The headset further includes a controller which processes the digital audio signal to generate IP packets and implements a VoIP call control protocol. The headset includes a computer readable memory storing instructions that when executed by the controller cause the wireless VoIP headset to perform a method for originating a VoIP call. The method includes, receiving a spoken name or number from a user at the microphone, interpreting the spoken name or number using voice recognition, comparing the spoken name or number to a directory stored in the computer readable memory, and generating a VoIP call origination request message.

[0013] In one example of the invention, a wireless VoIP headset includes a speaker, a microphone for receiving speech energy from a near end user to generate an analog audio signal, and a codec for converting the analog audio signal to a digital audio signal and encoding the digital audio signal. The codec also decodes a receive digital audio signal for output to the speaker. The headset also includes an IEEE 802.11 transceiver and a controller for processing the digital audio signal to generate IP packets and implementing a VoIP call control protocol. The headset includes a computer readable memory storing instructions that when executed by the controller cause the wireless VoIP headset to perform a method for originating a call. The method includes automatically connecting to a voice recognition server upon activation of the wireless VoIP headset by a user.

[0014] In one example of the invention, a VoIP telephone system includes a computing device and a wireless VoIP headset. The computing device includes a

memory storing a name and phone number directory and a first IEEE 802.11 transceiver. The wireless VoIP headset includes a second IEEE 802.11 transceiver, a speaker, and a microphone for receiving speech energy from a near end user to generate an analog audio signal. A codec converts the analog audio signal to a digital audio signal and encodes the digital audio signal. The codec also decodes a receive digital audio signal for output to the speaker. The headset further includes a controller for processing the digital audio signal to generate IP packets and implementing a VoIP call control protocol. The headset includes a computer readable memory storing instructions that when executed by the controller cause the wireless VoIP headset to perform a method for originating a call. The method includes receiving a user directory selection from the computing device through the first IEEE 802.11 transceiver to the second IEEE 802.11 transceiver, and generating a VoIP call origination request message responsive to the user directory selection.

[0015] In one example of the invention, a method for initiating a VoIP telephone call includes providing a wireless VoIP headset. The wireless VoIP headset includes a speaker, a microphone, a codec, a controller, a first memory, and a first IEEE 802.11 transceiver for wireless communications with an IEEE 802.11 access point. The method further includes providing a computing device including a second memory storing a name and phone number directory, and a second IEEE 802.11 transceiver for wireless communications with an IEEE 802.11 access point. The method includes receiving a user selection at the computing device from the name and phone number directory, transmitting the user selection from the computing device to the wireless VoIP headset via the IEEE 802.11 access point, and generating a VoIP call origination request message at the wireless VoIP headset responsive to the user selection.

[0016] In one example of the invention, a method for initiating a VoIP telephone call includes providing a wireless VoIP headset. The wireless VoIP headset includes a speaker, a microphone, a codec, a controller, a first memory, and a first IEEE 802.11 transceiver for wireless communications with an IEEE 802.11 access point. The method includes providing a computing device having a second memory storing a name and phone number directory, and a wired IEEE 802.3 network connection to the IEEE 802.11 access point. The method further includes receiving a user selection at the computing device from the name and phone number directory, transmitting the user selection from the computing device to the wireless VoIP headset via the IEEE 802.11 access point, and generating a VoIP call origination request message at the wireless VoIP headset responsive to the user selection.

[0017] **FIG. 1** illustrates a simplified block diagram of a wireless VoIP headset 100 in one example of the invention. VoIP headset 100 is operable as a VoIP telephone with call origination capability. Wireless VoIP headset 100 includes an IEEE 802.11 radio transceiver 2 along with an associated host controller 4. Host controller 4 interfaces with memory 30. For example, memory 30 may include a combination of non-volatile and volatile memory, including flash memory and SDRAM.

[0018] Wireless VoIP headset 100 has a speaker 14 and a microphone 16. A codec 10 includes an analog-to-digital (A/D) converter for converting the signals received from microphone 16 to digital form. The digital signals are encoded by codec 10. A control interface 32 transfers data between host controller 4 and codec 10. Codec 10 also includes a D/A converter for converting digital audio for playback over speaker 14.

[0019] The output of codec 10 is provided to host controller 4 through audio interface 34. Additionally, codec 10 receives the output of host controller 4 through audio

interface 34. In one example of the invention, codec 10 encodes the digital signals received from the A/D converter using pulse code modulation (PCM) and transfers them to host controller 4. For example, 16 bit, 8 kSamples/sec encoding may be used for telephony or 16 bit, 16 kSamples/sec encoding may be used for wideband applications. Other examples of VoIP audio codec formats include, without limitation, linear PCM and iLBC, and ITU-T recommendations G.711. G.729, G.723, G.726, and G.722.

[0020] A digital signal processor (DSP) may perform a variety of audio signal processing functions known in the art to improve the sound quality of the encoded audio received from codec 10 and to improve voice recognition accuracy or sound quality of the transmit voice signal. The DSP may also perform processing on a receive signal prior to output to speaker 14 through codec 10. Such processing may include echo cancellation, noise reduction, and multiband compression. Noise reduction may be employed to mitigate the effects of various types of noise in the system. A wide variety of techniques may be used which separate the desirable signal, i.e., speech from the person currently talking, from various sources of interference, e.g., peripheral noise, far end-speech, etc. Such techniques may include the use of, for example, Wiener filters, noise gates, spectral subtraction, and other techniques known in the art.

[0021] Host controller 4 controls the operation of wireless VoIP headset 100 and processes the PCM audio to form data packets for wireless transmission and reception of packets over an IEEE 802.11 network using an IEEE 802.11 transceiver 2 and antenna 36. Host controller 4 is programmed with associated computer program instructions to perform the functionalities described herein.

[0022] The ITU-T standardizes PCM, ADPCM, and CELP coding schemes in its G-series recommendations. Example voice coding standards for telephony and packet voice

include G.711, G.722, G.723, G.726, and G.729. G.711 describes 64 kbps PCM voice coding. G.726 describes ADPCM coding at 16, 24, 32, and 40 kbps. G.729 describes CELP compression that enables voice to be coded into 8 kbps streams. The number of speech samples sent in one packet can be varied. For example, G.729 coding generates a speech sample every 10 ms. The Cisco IOS VoIP product places two speech samples within one packet. In a further example of the invention, four or more speech samples may be placed in each packet.

[0023] In one example of the invention, a standards based VoIP telephone stack and a standards based IEEE 802.11 software protocol stack are utilized. In one example, wireless VoIP headset 100 utilizes a Linux operating system with open technology VoIP software. In one example, a multi-threaded VoIP application is used which utilizes a link manager which supplements IEEE 802.11 driver service for roaming from AP to AP, a SIP stack, and an RTP stack.

[0024] Host controller 4 monitors the activity of the wireless VoIP headset 100 and receives input from various user interface components including, for example, a call initiate, answer, and terminate button, a volume encoder, a mute circuit/switch, and an on/off circuit. Host controller 4 also has input/output interfaces including, for example visual indicators. The headset user interface includes a means to be alerted of an incoming call and a means to answer the call. The headset user interface includes a means to originate a phone call, as described in further detail below.

[0025] As discussed above, wireless VoIP headset 100 is configured to receive and transmit digital data or packets over a wireless IEEE 802.11 interface. Packets are received and transmitted using a IEEE 802.11 transceiver chip set. The wireless VoIP headset 100 includes a suitable antenna 36 for transmitting and receiving the packets.

[0026] Host controller 4 is operable to perform functions necessary to implement VoIP. For example, host controller 4 operates as a system control unit providing call control (such as H.225 and H.245 call control), messaging, capability exchange, and signaling of commands for proper operation of the VoIP functions of the wireless VoIP headset 100. In one example of the invention, host controller 4 implements Session Initiation Protocol (SIP). SIP is an application-layer signaling protocol over IP networks designed for creating and terminating sessions such as phone calls.

[0027] In a further example of the invention, host controller 4 implements the H.323 International Telecommunication Union Telecommunication Standardization Sector (ITU-T) specification for transmitting audio, video, and data across an Internet Protocol network, including the Internet. H.323 defines a set of call control, channel setup, and codec specifications for transmitting real time audio and video over packet data networks. In an H.323 network, the IP network may connect to a PSTN via a H.323 gateway, which serves to interface between the packet based IP network and other networks such as the PSTN. In furthers examples, other VoIP call-control protocols may be used. Such VoIP call control protocols include Simple Gateway Control Protocol (SGCP) and Internet Protocol Device Control (IPDC).

[0028] A real time transport protocol (RTP) header may be added. VoIP is carried out with an RTP/UDP/IP packet header. An IP header includes a source address field and a destination address field. A UDP header includes four fields: source port, length, destination port, and checksum. An RTP header includes a sequence number field and timestamp field. RTP is the standard for transmitting delay sensitive traffic such as audio across packet-based networks. RTP resides on top of UDP and IP, giving receiving stations information that is not available in the connectionless UDP/IP streams. Such

information includes sequence information and timestamping. Sequencing information is included in the RTP header to determine whether the packets are arriving in order. Time-stamping information is included in the RTP header to determine when the enclosed data should be replayed to the headset speaker. A data buffer, commonly referred to as a "jitter buffer", is used to store the received data until the RTP clock reaches the time indicated in the timestamp.

[0029] Wireless VoIP headset 100 is capable of call origination. To originate a call it is necessary to generate a destination phone number and an origination request. In one example, wireless VoIP headset 100 utilizes embedded voice recognition for call origination. A self contained directory 28 associating names and phone numbers is stored in memory 30, along with a voice recognition engine 24 and call origination application 26. This allows the destination to be determined from spoken dial-by-number recognition or by dial-by-name or other means (e.g., operator, reception, help desk) drawing on a self contained directory 28. This directory may be loaded into the headset memory 30 either over the air or through other synchronization means, perhaps to the user's Microsoft Outlook address book on his/her computer. The directory may contain SIP URIs which are used directly to originate calls. Alternatively, the directory may contain phone numbers which are used to construct a SIP URI using the method described below. Spoken names or numbers are interpreted by the voice recognition engine 24 at call origination application 26 and the result used to generate an origination request message using the chosen VoIP signaling mechanism such as SIP.

[0030] In SIP, the call origination request message is an INVITE request sent by the SIP user agent wireless VoIP headset 100. The INVITE request includes a To: field containing a display name and a destination SIP address (also referred to as the SIP URI

(Uniform Resource Identifier)) of the intended recipient of the call (referred to herein as the "callee'). The SIP address is identified by the format user@host. The user portion of the address can be a user name or telephone number and the host portion can be a domain name or network address. For example, the To: field may be:

To: user3<sip:user3@server3.com>

or

To: user4<sip:8315252222@server4.com

where "user 3" and "user 4" are the user names and "sip:user3@server3.com" and "sip:8315252222@server4.com" are the SIP addresses of the callee. A user SIP address is matched with each name and telephone number in self contained directory 28. In one example, a user SIP address may correspond to an existing phone number which has been translated to an SIP address using ENUM (Telephone Number Mapping) or Distributed Universal Number Discovery (DUNDi) protocols.

[0031] The INVITE request is sent from the wireless VoIP headset 100 to a proxy server, which forwards the INVITE request to another proxy server or to the recipient (the callee) itself. The precise IP address of the callee may not be known by the SIP user agent at the time the INVITE request is generated. The proxy server utilizes a registrar server to identify the precise IP address of the callee, which has been registered by the callee to the registrar server and stored in a location server along with the callee user name. Upon receipt of the INVITE request, if the callee accepts the call, an OK response message is sent by the callee phone back towards VoIP headset 100. The OK response message includes the exact IP address of the callee phone so that VoIP headset 100 can communicate directly without the need for a proxy server. VoIP headset 100 then sends an ACK message directly to the callee phone to confirm the setup of the call.

[0032] Power is provided to the components of wireless VoIP headset 100 using a rechargeable battery such as Lithium ion battery 18, which is used to provide a regulated voltage supply 20 at various levels as needed by the components. For example, regulated voltage supply 20 may provide a 1.8V and 3.3V supply. A charging circuit 22 is used to provide charging power to battery 18. The components illustrated in **FIG. 1** are packaged in a headset form factor.

[0033] Since the headset 100 includes a processor running an Internet Protocol stack and an IP address, it is also capable of supporting a web page server. The web pages that it serves can include headset control functions, such as a telephone directory, volume control, audio filtering, signal processing control, and specific set up and provisioning information such as the IP address of the SIP server. The user can access these web pages through the use of a standard web browser which supports the Hyper-Text Markup Language (HTML) or the eXtensible Markup Language (XML) to control the operation of the headset.

[0034] **FIG. 2** illustrates a system view of a wireless VoIP headset 100 in use in one example of the invention. Wireless VoIP headset 100 and an IEEE 802.11 access point 52 communicate over an IEEE 802.11 wireless link 50. The use of the term IEEE 802.11 herein is meant to address the entire family of IEEE 802.11 standards, including IEEE 802.11b, IEEE 802.11g, and future standards such as IEEE 802.11n. Access point 52 connects to an Ethernet LAN via Ethernet switch 54. Ethernet switch 54 connects to the PSTN 62 via a VoIP to PSTN gateway 56 for communication with a telephone 58.

[0035] **FIG. 3** illustrates a system view of a wireless VoIP headset 200 in use with server based voice recognition in a further example of the invention. Wireless VoIP headset 200 and an IEEE 802.11 access point 202 communicate over an IEEE 802.11

wireless link 204. IEEE 802.11 access point 202 is coupled to an Ethernet switch 206. Ethernet switch 206 is coupled to an IP network 218, which connects to a VoIP interface 216. VoIP interface 216 connects to a voice recognition server 208. Voice recognition server 208 includes a speech user interface application 210, speech recognition application 212, and text-to-speech application 214. Voice recognition server 208 allows a user to place telephone calls over either the Internet or a PSTN.

[0036] In operation, wireless VoIP headset 200 is configured to automatically connect to voice recognition server 208 upon a designated user interface action. For example, pushing a button on the wireless VoIP headset 200 would originate a call and direct it to the voice recognition server 208. For example, when the hook switch on the wireless VoIP headset 200 is pressed, a SIP request command to set up a VoIP phone call is sent from the wireless VoIP headset 200 to the VoIP interface 216. This SIP command carries the phone number for the voice recognition server 208. The SIP URI or the IP address is pre-stored in the headset. From this point forward, the VoIP Interface 216 directs the VoIP data packets to voice recognition server 208 and vice-versa. Voice commands received at the wireless VoIP headset 200 and transmitted to voice recognition server 208 are then used to complete the call.

[0037] **FIG. 4** illustrates a system view of a wireless VoIP headset 300 in use with an adjunct computing device 308 in a further example of the invention. Wireless VoIP headset 300 is the same as wireless VoIP headset 100 except that it does not utilize a self embedded directory or voice recognition in the call origination process. Wireless VoIP headset 300 and an IEEE 802.11 access point 302 communicate over an IEEE 802.11 wireless link 304. IEEE 802.11 access point 302 is coupled to a LAN 306. An adjunct computing device 308 includes an IEEE 802.11 transceiver and communicates with IEEE

802.11 access point 302 over an IEEE 802.11 wireless link 310. For example, computing device 308 is a personal digital assistant storing a directory of names and phone numbers. In a further example, computing device 308 is connected to the IEEE 802.11 access point 302 via a wired 802.3 Ethernet network. For example, computing device 308 may be a desktop PC.

[0038] In operation, adjunct computing device 308 is associated with the wireless VoIP headset 300 and communicates directly with it through the IP network. For example, a name and phone number directory stored on the adjunct computing device 308 is used by a user of the computing device 308 to select a phone call destination. The associated selected phone number or SIP URI is transmitted to wireless VoIP headset 300 over the IP network. The headset originates the call by initiating a call originate request message including the associated phone number or SIP URI, through the VoIP protocol.

[0039] The various examples described above are provided by way of illustration only and should not be construed to limit the invention. Based on the above discussion and illustrations, those skilled in the art will readily recognize that various modifications and changes may be made to the present invention without strictly following the exemplary embodiments and applications illustrated and described herein. Such changes may include, but are not necessarily limited to: number, placement, and functions performed by the user interface on the wireless VoIP headset; wireless communication technologies; standards to perform the VoIP call setup, signaling, and control. Furthermore, the functionality associated with any blocks described above may be centralized or distributed. It is also understood that one or more blocks of the wireless VoIP headset may be performed by hardware, firmware or software, or some

combinations thereof. Such modifications and changes do not depart from the true spirit and scope of the present invention that is set forth in the following claims.

[0040] Those skilled in the art will appreciate that the reference to packets as used herein is intended to encompass any type of packet, including but not limited to Internet Protocol (IP) packets, Ethernet frames, Asynchronous Transfer Mode (ATM) cells and other types of datagrams. Similarly, the terms "VoIP" and "VoIP phone" is used in the generic sense to include any "voice-over-packet" technique or device, without limitation to a specific standard.

[0041] While the exemplary embodiments of the present invention are described and illustrated herein, it will be appreciated that they are merely illustrative and that modifications can be made to these embodiments without departing from the spirit and scope of the invention. Thus, the scope of the invention is intended to be defined only in terms of the following claims as may be amended, with each claim being expressly incorporated into this Description of Specific Embodiments as an embodiment of the invention.

CLAIMS

What is claimed is:

1. A wireless VoIP headset comprising:

a speaker;

a microphone for receiving speech energy from a near end user to generate an analog audio signal;

a codec for converting the analog audio signal to a digital audio signal and encoding the digital audio signal, wherein the codec also decodes a receive digital audio signal for output to the speaker;

a controller for processing the digital audio signal to generate IP packets and implementing a VoIP call control protocol;

an IEEE 802.11 transceiver; and

a computer readable memory storing instructions that when executed by the controller cause the wireless VoIP headset to perform a method for originating a VoIP call comprising:

receiving a spoken name or number from a user at the microphone;

interpreting the spoken name or number using voice recognition;

comparing the spoken name or number to a directory stored in the computer readable memory; and

generating a VoIP call origination request message.

2. The wireless VoIP headset of claim 1, wherein the controller provides call control, messaging, capability exchange, and command signaling to implement Voice over Internet Protocol in accordance with Session Initiation Protocol.

3. The wireless VoIP headset of claim 2, wherein the VoIP call origination request message comprises a SIP INVITE message.

4. The wireless VoIP headset of claim 1, wherein the controller provides call control, messaging, capability exchange, and command signaling to implement Voice over Internet Protocol in accordance with the H.323 ITU-T specification,

Simple Gateway Control Protocol (SGCP) or Internet Protocol Device Control (IPDC).

5. The wireless VoIP headset of claim 1, wherein encoding the digital audio signal comprises using pulse code modulation, linear pulse code modulation, iLBC, or ITU-T recommendations G.711. G.729, G.723, G.726, or G.722.

6. The wireless VoIP headset of claim 1, wherein the digital audio signal is transferred betweenthe codec andthe controller.

7. The wireless VoIP headset of claim 1, further comprising a plurality of web pages stored in the computer readable memory which may be served by the wireless VoIP headset.

8. The wireless VoIP headset of claim 7, wherein the plurality of web pages includes web pages associated with a telephone directory, volume control, audio filtering, signal processing control, or set up and provisioning information.

9. A wireless VoIP headset comprising:

a speaker;

a microphone for receiving speech energy from a near end user to generate an analog audio signal;

a codec for converting the analog audio signal to a digital audio signal and encoding the digital audio signal, wherein the codec also decodes a receive digital audio signal for output to the speaker;

a controller for processing the digital audio signal to generate IP packets and implementing a VoIP call control protocol;

an IEEE 802.11 transceiver;

a computer readable memory storing instructions that when executed by the controller cause the wireless VoIP headset to perform a method for originating a call comprising automatically connecting to a voice recognition server upon activation of the wireless VoIP headset by a user.

10. The wireless VoIP headset of claim 9, wherein the controller provides call control, messaging, capability exchange, and command signaling to implement Voice over Internet Protocol in accordance with Session Initiation Protocol.

11. The wireless VoIP headset of claim 9, wherein automatically connecting to a voice recognition server comprises sending a VoIP call origination request message to the voice recognition server.

12. The wireless VoIP headset of claim 11, wherein the VoIP call origination request message comprises a SIP INVITE message.

13. The wireless VoIP headset of claim 9, wherein the controller provides call control, messaging, capability exchange, and command signaling to implement Voice over Internet Protocol in accordance with the H.323 ITU-T specification, Simple Gateway Control Protocol (SGCP) or Internet Protocol Device Control (IPDC).

14. The wireless VoIP headset of claim 9, wherein encoding the digital audio signal comprises using pulse code modulation, linear pulse code modulation, iLBC, or ITU-T recommendations G.711. G.729, G.723, G.726, or G.722.

15. The wireless VoIP headset of claim 9, wherein the digital audio signal is transferred between the codec and the controller.

16. A VoIP telephone system comprising:
a computing device comprising:
a memory storing a name and phone number directory;
a first IEEE 802.11 transceiver;
a wireless VoIP headset comprising:
a second IEEE 802.11 transceiver;
a speaker;
a microphone for receiving speech energy from a near end user to generate an analog audio signal;

a codec for converting the analog audio signal to a digital audio signal and encoding the digital audio signal, wherein the codec also decodes a receive digital audio signal for output to the speaker;

a controller for processing the digital audio signal to generate IP packets and implementing a VoIP call control protocol;

a computer readable memory storing instructions that when executed by the controller cause the wireless VoIP headset to perform a method for originating a call comprising:

receiving a user directory selection from the computing device from the second IEEE 802.11 transceiver;

generating a VoIP call origination request message responsive to the user directory selection.

17. The VoIP telephone system of claim 16, wherein the controller provides call control, messaging, capability exchange, and command signaling to implement Voice over Internet Protocol in accordance with Session Initiation Protocol.

18. The VoIP telephone system of claim 16, wherein the VoIP call origination request message comprises a SIP INVITE message.

19. The VoIP telephone system of claim 16, wherein the controller provides call control, messaging, capability exchange, and command signaling to implement Voice over Internet Protocol in accordance with the H.323 ITU-T specification, Simple Gateway Control Protocol (SGCP) or Internet Protocol Device Control (IPDC).

20. The VoIP telephone system of claim 16, wherein encoding the digital audio signal comprises using pulse code modulation, linear pulse code modulation, iLBC, or ITU-T recommendations G.711. G.729, G.723, G.726, or G.722.

21. The VoIP telephone system of claim 16, wherein the digital audio signal is transferred between the codec and the controller.

22. A method for initiating a VoIP telephone call comprising:

providing a wireless VoIP headset comprising:

a speaker;

a microphone;

a codec;

a controller;

a first memory; and

a first IEEE 802.11 transceiver for wireless communications with an IEEE 802.11 access point;

providing a computing device comprising:

a second memory storing a name and phone number directory;

a second IEEE 802.11 transceiver for wireless communications with an IEEE 802.11 access point;

receiving a user selection at the computing device from the name and phone number directory;

transmitting the user selection from the computing device to the wireless VoIP headset via the IEEE 802.11 access point; and

generating a VoIP call origination request message at the wireless VoIP headset responsive to the user selection.

23. A method for initiating a VoIP telephone call comprising:

providing a wireless VoIP headset comprising:

a speaker;

a microphone;

a codec;

a controller;

a first memory; and

a first IEEE 802.11 transceiver for wireless communications with an IEEE 802.11 access point;

providing a computing device comprising:

a second memory storing a name and phone number directory;

a wired IEEE 802.3 network connection to the IEEE 802.11 access point;

receiving a user selection at the computing device from the name and phone number directory;

transmitting the user selection from the computing device to the wireless VoIP headset via the IEEE 802.11 access point; and

generating a VoIP call origination request message at the wireless VoIP headset responsive to the user selection.

100
ANT 36
IEEE 802.11
Transceiver
2
3.3V
Host
Controller
4
Audio I/F 34
3.3V
1.8V
Control I/F 32
Codec
10
(2)
14
(2)
16
Memory 30
24
26
28
Vreg
1.8V
Vreg
(2)
3.3V
Vreg
(2)
1.8V
Li-ion
battery
Charger
(optional)
20
18
22

1/4

FIG. 1

VoIP Headset
100
50
Access Point
52
Ethernet Switch
54
VoIP to PSTN
Gateway 56
PSTN
62
Telephone
58

FIG. 2

VoIP Headset
200
204
Access Point
202
Ethernet Switch
206
IP Network 218
VoIP Interface
216
Speech UI 210
Speech Recognition
212
Text-to-Speech 214
208
Operating System

FIG. 3

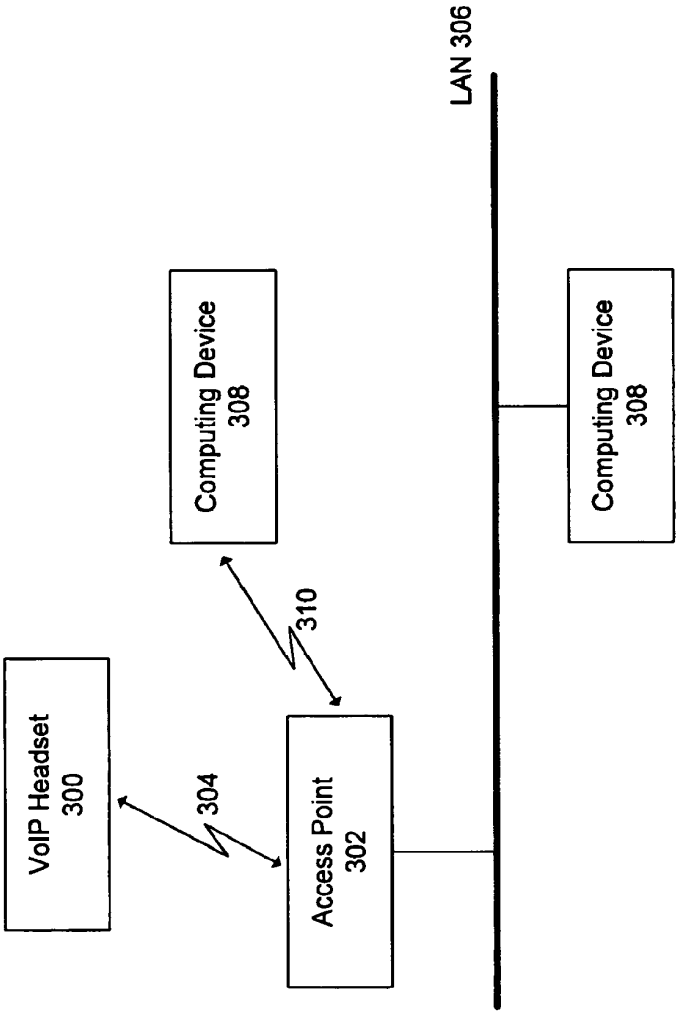
LAN 306
Computing Device 308
Computing Device 308
310
VoIP Headset 300
304
Access Point 302

FIG. 4

INTERNATIONAL SEARCH REPORT

International application No
PCT/US2007/019958

A. CLASSIFICATION OF SUBJECT MATTER
INV. H04M1/60
ADD. H04M1/253

According to International Patent Classification (IPC) or to both national classification and IPC

B. FIELDS SEARCHED

Minimum documentation searched (classification system followed by classification symbols)
H04M H04R

Documentation searched other than minimum documentation to the extent that such documents are included in the fields searched

Electronic data base consulted during the international search (name of data base and, where practical, search terms used)
EPO-Internal, WPI Data

C. DOCUMENTS CONSIDERED TO BE RELEVANT

Category*	Citation of document, with indication, where appropriate, of the relevant passages	Relevant to claim No.
X Y	DE 20 2005 020531 U1 (AKG ACOUSTICS GMBH [AT]) 14 June 2006 (2006-06-14) paragraphs [0017], [0020], [0021], [0030], [0038] - [0040]; figures 1-4	1-8 16-23
Y	US 2005/286453 A1 (GADAMSETTY UMA M [US] ET AL) 29 December 2005 (2005-12-29) paragraphs [0014], [0016], [0017], [0019], [0027]; figure 1	16-23

☐ Further documents are listed in the continuation of Box C.

☒ See patent family annex.

* Special categories of cited documents :

"A" document defining the general state of the art which is not considered to be of particular relevance

"E" earlier document but published on or after the international filing date

"L" document which may throw doubts on priority claim(s) or which is cited to establish the publication date of another citation or other special reason (as specified)

"O" document referring to an oral disclosure, use, exhibition or other means

"P" document published prior to the international filing date but later than the priority date claimed

"T" later document published after the international filing date or priority date and not in conflict with the application but cited to understand the principle or theory underlying the invention

"X" document of particular relevance; the claimed invention cannot be considered novel or cannot be considered to involve an inventive step when the document is taken alone

"Y" document of particular relevance; the claimed invention cannot be considered to involve an inventive step when the document is combined with one or more other such documents, such combination being obvious to a person skilled in the art.

"&" document member of the same patent family

Date of the actual completion of the international search	Date of mailing of the international search report
14 December 2007	21/12/2007

Name and mailing address of the ISA/	Authorized officer
European Patent Office, P.B. 5818 Patentlaan 2 NL - 2280 HV Rijswijk Tel. (+31-70) 340-2040, Tx. 31 651 epo nl, Fax: (+31-70) 340-3016	AMOROTTI, M

Form PCT/ISA/210 (second sheet) (April 2005)

INTERNATIONAL SEARCH REPORT

Information on patent family members

International application No
PCT/US2007/019958

Patent document cited in search report	Publication date	Patent family member(s)	Publication date
DE 202005020531 U1	14-06-2006	NONE	
US 2005286453 A1	29-12-2005	NONE	

Form PCT/ISA/210 (patent family annex) (April 2005)

(12) INTERNATIONAL APPLICATION PUBLISHED UNDER THE PATENT COOPERATION TREATY (PCT)

(19) World Intellectual Property Organization
International Bureau

(43) International Publication Date
8 May 2008 (08.05.2008)

PCT

(10) International Publication Number
WO 2008/054985 A2

(51) International Patent Classification: Not classified

(21) International Application Number:
PCT/US2007/081414

(22) International Filing Date: 15 October 2007 (15.10.2007)

(25) Filing Language: English

(26) Publication Language: English

(30) Priority Data:
60/863,588 31 October 2006 (31.10.2006) US
11/842,259 21 August 2007 (21.08.2007) US

(71) Applicant *(for all designated States except US)*: **MOTOROLA INC.** [US/US]; 1303 East Algonquin Road, Schaumburg, Illinois 60196 (US).

(72) Inventors; and

(75) Inventors/Applicants *(for US only)*: **RUSSELL, Michael E.** [US/US]; 804 W. Panoranma Drive, Apt. 109, Palatine, Illinois 60067 (US). **BRAUN, Mark R.** [US/US]; 180 S. Channing Street, Elgin, Illinois 60120 (US). **SHEYNMAN, Arnold** [US/US]; 3918 Dundee Road, Northbrook, Illinois 60062 (US). **ZHAI, Tongyan** [CN/US]; 8510 82nd Street, Apt. 310, Pleasant Prairie, Wisconsin 53158 (US).

(74) Agents: **NOSKOWICZ, David S.** et al.; 600 North US Highway 45, Libertyville, Illinois 60048 (US).

(81) Designated States *(unless otherwise indicated, for every kind of national protection available)*: AE, AG, AL, AM, AT, AU, AZ, BA, BB, BG, BH, BR, BW, BY, BZ, CA, CH, CN, CO, CR, CU, CZ, DE, DK, DM, DO, DZ, EC, EE, EG, ES, FI, GB, GD, GE, GH, GM, GT, HN, HR, HU, ID, IL, IN, IS, JP, KE, KG, KM, KN, KP, KR, KZ, LA, LC, LK, LR, LS, LT, LU, LY, MA, MD, ME, MG, MK, MN, MW, MX, MY, MZ, NA, NG, NI, NO, NZ, OM, PG, PH, PL, PT, RO, RS, RU, SC, SD, SE, SG, SK, SL, SM, SV, SY, TJ, TM, TN, TR, TT, TZ, UA, UG, US, UZ, VC, VN, ZA, ZM, ZW.

(84) Designated States *(unless otherwise indicated, for every kind of regional protection available)*: ARIPO (BW, GH, GM, KE, LS, MW, MZ, NA, SD, SL, SZ, TZ, UG, ZM, ZW), Eurasian (AM, AZ, BY, KG, KZ, MD, RU, TJ, TM), European (AT, BE, BG, CH, CY, CZ, DE, DK, EE, ES, FI, FR, GB, GR, HU, IE, IS, IT, LT, LU, LV, MC, MT, NL, PL,

[Continued on next page]

(54) Title: METHODS AND DEVICES FOR DUAL MODE BIDIRECTIONAL AUDIO COMMUNICATION

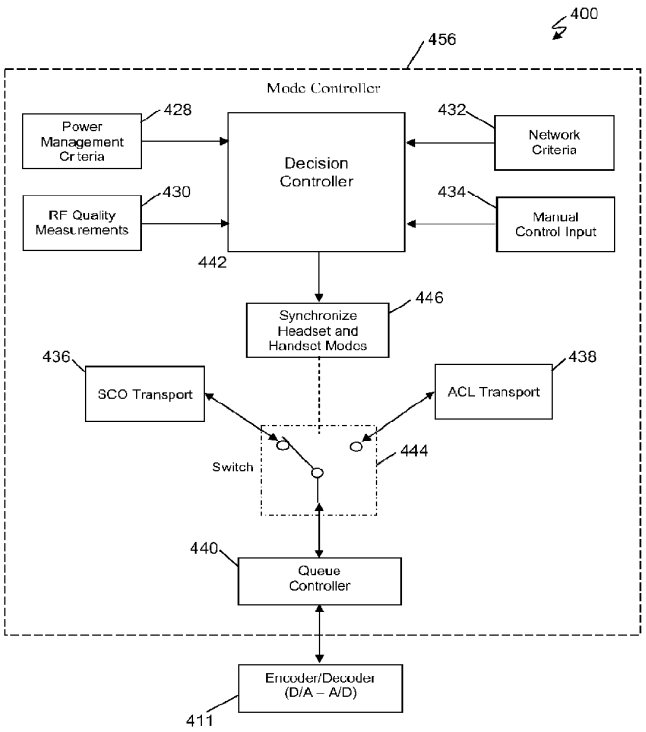

(57) Abstract: Disclosed are dual mode I/O devices and methods for transmission of a short range radio link such as a Bluetooth link that is a bi-directional real-time audio communication signal that can be over a synchronous circuit-switched transport and an asynchronous packet-switched transport either sequentially or simultaneously. Also disclosed are dual mode wireless headset systems and methods of at least two dual mode I/O devices and more particularly including a wireless audio terminal and an audio gateway for transmission of a bi-directional real-time audio communication signal that can be over a synchronous circuit-switched (SCO) transport and an asynchronous packet-switched (ACL) transport either sequentially or simultaneously. Having both SCO and ACL modes available may allow the user to optimize voice quality or data throughput under different operating conditions. The user may benefit from better Bluetooth voice quality and may have the flexibility of using either mode depending upon the situation.

WO 2008/054985 A2

PT, RO, SE, SI, SK, TR), OAPI (BF, BJ, CF, CG, CI, CM, GA, GN, GQ, GW, ML, MR, NE, SN, TD, TG).

Published:

— *without international search report and to be republished upon receipt of that report*

METHODS AND DEVICES FOR DUAL MODE BIDIRECTIONAL AUDIO COMMUNICATION

FIELD

[0001] Disclosed are wireless headsets and methods of wireless headsets, and more particularly dual mode wireless headsets and methods for use with an audio gateway device.

BACKGROUND

[0002] Bluetooth wireless technology provides a manner in which many wireless devices may communicate with one another, without connectors, wires or cables. Bluetooth technology uses the free and globally available unlicensed 2.4 GHz ISM spectrum, for low-power use, allowing two Bluetooth devices within a range of up to 10 to 100 meters to share data with throughput up to 2.1 Mbps. Each Bluetooth device can simultaneously communicate with multiple other devices.

[0003] Current common uses for Bluetooth technology include those for headsets, cellular car kits and adapters. Moreover, Bluetooth technology is currently used for connecting a printer, keyboard, or mouse to a personal computer without cables. Since Bluetooth technology can facilitate delivery of large amounts of data, computers may use Bluetooth for connection to the Internet through a mobile phone. Bluetooth devices can connect to form a piconet, which consists of a master and up to seven slave devices. Two types of connections can be established in a piconet: a Synchronous Connection Oriented (SCO) link, and an Asynchronous Connectionless

(ACL) link. SCO links provide a circuit-oriented service with constant bandwidth based on a fixed and periodic allocation of time slots that is used for voice transmission. There are also extended synchronous connection-oriented packets (eSCO) that have the same functionality as SCO packets but allow for more packet types, data types, and limited retransmissions. ACL connections, on the other hand, provide a packet-oriented service that is used for transmission of data and control signals. Traditionally, voice communication on SCO is bi-directionally processed by a voice codec or encoder/decoder while stereo communication on ACL is uni-directionally processed by a stereo codec. In a communication device, there are two separate codecs, one for communicating audio on SCO and the other for communicating audio on ACL.

[0004] Wireless Local Area Networks (WLANs) are becoming compatible with many different types of products. While businesses originally installed WLANs so that desktop computers could be used on networks without expensive wiring, the functionality of the WLANs has evolved to allow mobile communication devices, such as wireless telephones, laptop computers, personal digital assistants (PDAs) and digital cameras to connect to WLANs for Internet access and wireless Voice over Internet Protocol (VoIP) telephone service. Short for wireless fidelity, WiFi is a trademark for sets of product compatibility standards for WLANs. Manufacturers of mobile communication devices such as cellular telephones are WiFi enabling the devices so that when a user roams into a WiFi hot spot, a telephone can switch its communication protocol from the cellular band that uses licensed, limited spectrum to WiFi communication protocol that uses available unlicensed spectrum. In indoor situations, a switch to a WiFi protocol from a cellular network such as one based on

thc Global Systcm for Mobilc Communication standard (GSM) may bc additionally beneficial since a cellular network can lose its signal strength indoors while a WLAN may have a strong signal within a hotspot.

[0005] The Bluetooth 2.4 GHz radio band is close to that of particular transceivers that operate at 2.3 GHz or 2.5 GHz, such as the Worldwide Interoperability for Microwave Access (WiMAX) Worldwide Interoperability for Microwave Access (WiMAX) transceiver based on IEEE 802.16e. Communication of audio signals between Bluetooth devices may collide in time with other signals such as WiFi and other standards-based wireless technologies such as Worldwide Interoperability for Microwave Access (WiMAX), thus desensitizing the receivers due to insufficient blocking performance and overlapping spectrum allocations. There can be adjacent channel interference with WiFi for example and with WiMAX, as the Bluetooth guard band is only 20 MHz. Synchronous connections, in particular SCO, such as those used in headsets are inflexible in scheduling of transmission and reception and result in simultaneous use of both radios, especially in an "802.16e" transceiver on a mobile device having packets scheduled by the WiMAX basestation, causing interference problems. While synchronous connections using eSCO have a limited ability to schedule packet transmissions, due to the limited retransmission window, they will still have periodic collisions with other wireless technologies and use more bandwidth and system resources than SCO links. The Bluetooth Core Specification describes a solution for co-existence with WiFi that mitigates interference. Advanced Frequency Hopping (AFH) is one technique that shrinks the available bandwidth to prevent using the same portion of the ISM band as another technology. Though this does not solve the problem of adjacent channel interference

from other technologies such as WiMAX with high transmit powers and poor adjacent channel rejection. When Bluetooth and WiFi or WiMAX are collocated, AFH can be insufficient and a collaborative method of co-existence such as Packet Traffic Arbitration (PTA) may be used. However, PTA can significantly impact the WiFi data rate when Bluetooth SCO or eSCO is active.

[0006] Bluetooth devices, and particularly headsets, enjoy popularity because they can offer users the ability to communicate while seamlessly operating in different environments. Accordingly, providing improved voice quality over Bluetooth has become important for mobile device manufacturers. It would be beneficial were improvements made to voice quality over Bluetooth.

BRIEF DESCRIPTION OF THE DRAWINGS

[0007] The accompanying figures, where like reference numerals refer to identical or functionally similar elements throughout the separate views and which together with the detailed description below are incorporated in and form part of the specification, serve to further illustrate various embodiments and to explain various principles and advantages all in accordance with the present invention.

[0008] FIG. 1 illustrates a system of two Input/Output (I/O) devices configured to transmit and/or receive via a short range radio link;

[0009] FIG. 2 is a flowchart illustrating input to a decision controller and output to switch between one and another transport;

[0010] FIG. 3 is a signal flow diagram for two devices, in this example a headset and a handset when the handset is the initiator;

[0011] FIG. 4 is an architecture diagram including a mode controller;

[0012] FIG. 5 illustrates some processes of a queue controller;

[0013] FIG. 6 is a flowchart of a method of a dual mode wireless headset according to an embodiment; and

[0014] FIG. 7 depicts some architecture components of a Bluetooth enabled I/O device such as the headset of FIG. 1.

[0015] Skilled artisans will appreciate that elements in the figures are illustrated for simplicity and clarity and have not necessarily been drawn to scale. For example, the dimensions of some of the elements in the figures may be exaggerated relative to other elements to help to improve understanding of embodiments of the present invention.

DETAILED DESCPRIPTION

[0016] Disclosed are dual mode I/O devices and methods for transmission of a short range radio link such as a Bluetooth link that is a bi-directional real-time audio communication signal that can be over a synchronous circuit-switched transport and an asynchronous packet-switched transport either sequentially or simultaneously. Also disclosed are dual mode wireless headset systems and methods of at least two dual mode I/O devices and more particularly including a wireless audio terminal and an audio gateway for transmission of a bi-directional real-time audio communication signal that can be over a synchronous circuit-switched (SCO) transport and an asynchronous packet-switched (ACL) transport either sequentially or simultaneously. As mentioned above, a synchronous circuit switched transport can be used for voice data transmission. As will be described in detail below, an asynchronous packet-switched transport that is according to the Bluetooth specification used for data and

control signal transmission can be used for audio and in particular voice communication transmission. Dual mode refers to use of both an SCO mode and an ACL mode for voice communication. Either one or both of the wireless audio terminal and the audio gateway can process signals of both an SCO transport and an ACL transport. To process both transports, SCO and ACL, a single encoder/decoder in either or both devices can provide bi-directional audio communication from a single source.

[0017] Transport selection can be based on both transports' advantages and disadvantages when transferring audio, and in particular voice data. Transport selection for audio, and in particular voice transmission is characterized differently than for example, changing applications such as voice audio on SCO and streaming stereo on ACL where a choice is made between mutually exclusive telephony and single-directional media playing. Transport selection for voice transmission is further characterized differently from traditional methods of mitigating Bluetooth interference. It is understood that voice communication is an example of a bi-directional audio communication.

[0018] In contrast to the limited scheduling ability of SCO and limited retransmissions of eSCO packets and their implementation in headsets and handsfree devices, a voice over ACL system with a scheduling process may avoid simultaneous transmissions and receptions with other time division multiplexing (TDM) technologies by varying when packets are sent versus the fixed frequency transmissions of SCO and eSCO links. Having both SCO/eSCO and ACL modes available may allow the user to optimize voice quality or data throughput under different operating conditions. From this point on the term SCO or SCO mode will

include the functionalities of eSCO. In some noisy RF environments, voice over ACL may result in better audio quality than SCO. In either case, the user may benefit from better Bluetooth voice quality and may have the flexibility of using either mode (SCO or ACL) depending upon the situation. In particular, switching between SCO and ACL can be based on certain criteria such as quality of signal indicators or network infrastructure, for example, when handing over from a GSM cell to a WiFi access point or WiMAX basestation.

[0019] In the above-mentioned devices, systems and methods, transport selection of one of the SCO and ACL transports for real-time audio signal communication may be based upon operating conditions or manual activation. Transport selection according to operating conditions may be based on, for example, radio frequency quality measurements and network criteria as mentioned above and power management criteria. A Bluetooth audio I/O device can be, for example, a headset, a carkit, a handset of a cordless telephone, and a handset of a mobile communication device. An audio gateway may be, for example, a mobile telephone, a computer, a Bluetooth headset, and a Bluetooth handsfree carkit.

[0020] During transmission and receipt of audio signals, and in particular voice signals, a Bluetooth device can switch between a synchronous circuit-switched transport and an asynchronous packet-switched transport. Each transport has particular characteristics and benefits, and the two transports are mutually exclusive, except for example during the switching process where they may be simultaneously transmitted as discussed in detail below. The ability to use two transports for bi-directional audio signals, and in particular voice signals can improve voice quality over Bluetooth, enhancing the user's experience of seamless mobility. In a system

such as a Bluetooth headset and a Bluetooth enabled handset, one or the other device can make a transport selection of one of the transports for real-time audio signal communication based upon operating conditions and/or manual activation.

[0021] The instant disclosure is provided to explain in an enabling fashion the best modes of making and using various embodiments in accordance with the present invention. The disclosure is further offered to enhance an understanding and appreciation for the invention principles and advantages thereof, rather than to limit in any manner the invention. While the preferred embodiments of the invention are illustrated and described here, it is clear that the invention is not so limited. Numerous modifications, changes, variations, substitutions, and equivalents will occur to those skilled in the art having the benefit of this disclosure without departing from the spirit and scope of the present invention as defined by the following claims. It is understood that the use of relational terms, if any, such as first and second, up and down, and the like are used solely to distinguish one from another entity or action without necessarily requiring or implying any actual such relationship or order between such entities or actions.

[0022] At least some inventive functionality and inventive principles may be implemented with or in software programs or instructions and integrated circuits (ICs) such as application specific ICs. In the interest of brevity and minimization of any risk of obscuring the principles and concepts according to the present invention, discussion of such software and ICs, if any, is limited to the essentials with respect to the principles and concepts within the preferred embodiments.

[0023] FIG. 1 illustrates a system 100 of two I/O devices 102 and 104 configured to transmit and/or receive via a short range radio link. The short range radio link can

bc a Bluctooth link that is a bi-dirccticnal rcal-timc audio communication signal, and can be sent over a synchronous circuit-switched transport and an asynchronous packet-switched transport either sequentially or simultaneously. The system 100 can include more than two devices. The first device 102 is depicted as a wireless audio terminal, such as a Bluetooth headset, Bluetooth handsfree carkit, a mobile phone or a Bluetooth adapter with attached stereo speakers. The second device 104 is depicted as an audio gateway such as a mobile communication device, a computer, a Bluetooth headset or a Bluetooth handsfree carkit. A second device 104 may be complimentary to the first device 102 so far as the functions and some, most or all of the Bluetooth architecture. However, the functions and/or architecture may be unique to each device as well.

[0024] The mobile communication device 104 may be implemented as a cellular telephone (also called a mobile phone). The mobile communication device 104 represents a wide variety of devices that have been developed for use within various networks. Such handheld communication devices include, for example, cellular telephones, messaging devices, personal digital assistants (PDAs), notebook or laptop computers incorporating communication modems, mobile data terminals, application specific gaming devices, video gaming devices incorporating wireless modems, and the like. Any of these portable devices may be referred to as a mobile station or user equipment. Herein, wireless communication technologies may include, for example, voicc communication, thc capability of transfcrring digital data, SMS mcssaging, Internet access, multi-media content access and/or voice over internet protocol (VoIP).

[0025] The devices 102 and 104 are depicted as each having a controller 106 and 108 respectively. They also can include one or more transceivers 110 and 112. Each device 102 and 104 may further include a voice codec that can also be referred to as an encoder/decoder 111 and 113 respectively. The terms encoder, encoder/decoder, analog-to-digital (A/D) and digital-to-analog (D/A) converter, and codec may be used interchangeably. Moreover, they can include memory 114 and 116 which may store instruction modules 118 and 119.

[0026] The modules 118 of device 102 and 119 of device 104 can carry out certain processes of the methods as described herein. Steps of methods may involve modules and modules may be inferred and/or implied by the methods discussed herein. The modules can be implemented in software, such as in the form of one or more sets of prestored instructions, and/or hardware, which can facilitate the operation of the mobile station or electronic device as discussed below. The modules may be installed at the factory or can be installed after distribution by, for example, a downloading operation. The operations in accordance with the modules will be discussed in more detail below.

[0027] Establishing modules 120 and 121 are for receiving real-time audio signals from a single source. SCO communication modules 122 and 123 are for bi-directionally communicating with another I/O device, via a short range radio link, real-time audio signals over a synchronous circuit-switched transport. ACL communication modules 124 and 125 are for bi-directionally communicating with another I/O device, via a short range radio link, real-time audio signals over an asynchronous packet-switched transport. Selecting modules 126 and 127 are for selecting one of the transports for real-time audio signal communication based upon

operating conditions. Power management criteria modules 128 and 129 are for transport selection. Radio frequency quality measurement modules 130 and 131 are for transport selection. Network criteria modules 132 and 133 are for transport selection. Manual selection modules 134 and 135 are for manually activating one or the other of the above described transports. Queue controller modules 140 and 141 are for managing packets in an encoder or decoder queue.

[0028] Referring to device 102 FIG. 1 further illustrates that the transceiver 110 is coupled to the controller 106 and that the transceiver 110 can be configured to establish a short range radio link and bi-directionally communicate real-time audio signals 101 over a synchronous circuit-switched (SCO) transport 136 and an asynchronous packet-switched transport (ACL) 138 over the short range radio link in accordance with establishing module 120 for receiving real-time audio signals from a single source. That is, for example, in bi-directional communication between the headset 102 having a single source voice codec 111 and the handset 104 having a single source voice codec 113, the transmission of the SCO transport 136 and the ACL transport 138 can be both processed from a single source, codec 111 and codec 113 of each device 102 and 104, respectively. Either or both devices 102 and/or 104 may include a bi-directional voice codec 111 and/or 113, respectively.

[0029] For the purpose of illustration, devices 102 and 104 are equipped with stereo codecs 115a and 115b respectively to further describe a single source and distinguish between the bi-directional ACL voice communication 138 and uni-directional ACL stereo communication 117. A traditional mono voice system with stereo music capability use both a bi-directional SCO communication mode 136 utilizing voice codecs 111 and 113 and an uni-directional ACL communication mode

117 utilizing stereo codecs 115a and 115b. In this example the source of audio from device 104 is seen to be from two sources, 113 and 115b, and in contrast to the disclosed methods and systems are mutually exclusive and the audio communication over the ACL transport is not bi-directional. While FIG. 1 shows two ACL paths 117 and 138 for illustrative purposes, there is only one ACL transport between devices 102 and 104. Accordingly, a described headset 102, for example, can be backwards compatible with an existing handset 104 using the SCO transport if the handset 104 is not capable of using the ACL transport 138 for voice communication and vice-versa. A handset 104 with a single source voice codec 113 as described may operate better with a headset 102 with a single source voice codec 111 according to this disclosure.

[0030] A hardware and/or software switch for transport selection of one of the transports for real-time audio signal communication based upon operating conditions is discussed in detail below. The system 100 of two devices 102 and 104 can communicate bi-directionally over the short range radio link 101 over a synchronous circuit-switched transport 136 and an asynchronous packet-switched transport 138 either sequentially or simultaneously.

[0031] FIG. 2 is a flowchart 200 illustrating input to a decision controller 242 and output to switch between one and the other above-described transports. A selection module 126 of device 102 (see FIG. 1) may provide instructions to the decision controller 242 that can receive automatic or manual activation. Automatic transport selection can be based, for example, on at least one of power management criteria 228, radio frequency quality measurements 230 and network criteria 232. Manual transport selection 234 may be provided by a user during regular operation, either through a button press or through a user interface on, for example, a mobile

communication device 104 (see FIG. 1) or another Bluetooth enabled wireless device to which a dual mode Bluetooth headset 102 is paired. A manual transport selection user interface may be coupled to the headset 102 as well. For example, if a user were to notice degradation over the voice link, the user could change modes using the headset man-machine interface to try to take advantage of the performance of the other link mode. Accordingly, a hardware and/or software switch 244 for transport selection of one of the transports for real-time audio signal communication may be manually activated and/or automatically activated and based upon operating conditions.

[0032] Automatic transport selection can be based on one or more of different criteria including power management criteria 228, radio frequency quality measurements 230 and network criteria 232. It is understood that any automatic transport selection criteria is within the scope of this discussion. If more than one criterion is considered, weighting of criteria or other criteria characterization may provide a determination of which criterion or criteria is controlling. Moreover, additional criteria or fewer criteria than those mentioned may be considered as well.

[0033] The automatic transport selection according to power management criteria 228 can include that the components of the device reach or exceed threshold values for a battery meter indicator or current drain measurement. The automatic transport selection according to radio frequency quality measurements 230 can include that the radio frequency quality is based on a Signal-to-Noise measurement, a channel map classification based upon number of channels with measured interference, a link quality measurement, a lost packets threshold, a missed packets threshold, a header errors threshold or a packet error rate threshold. The automatic transport selection

according to network criteria 232 can include that the network criteria is based on a wide area network indicator, a packet scheduling requirement for co-existence between wide area network and short range radio network, a system latency requirement, a system jitter requirement or a system bandwidth requirement for data rate. The decision controller 242 may then operate according to instructions of the selecting module 126 and one or more of the power management criteria module 128, the radio frequency management module 130, the network criteria module 132 and/or the manual selection module 134 to activate the SCO mode 236 and/or the ACL mode 238, sequentially or simultaneously.

[0034] FIG. 3 is a signal flow diagram 300 for two devices, in this example a handset 302 and a headset 304 when the handset 302 is the initiator. When the headset 304 is the initiator, the signaling diagram can be illustrated in the similar manner by exchanging the role of handset 302 and headset 304. The signal flow diagram illustrates messages that may be exchanged between the handset 302 and the headset 304 to enable the switching synchronization between the handset 302 and the headset 304.

[0035] The handset 302 may transmit a request switching signal 346 to the headset 304. The headset 304 may transmit an acknowledgement (ACK) signal 348 in response. The handset 302 may transmit a ready to switch with timing information query 350. The timing information may be exchanged to enable the synchronization between the handset 302 and the headset 304. The headset 304 may transmit an ACK signal 352 with any timing information in response. The switching may then occur 354 between the two devices so that the devices 302 and 304 may bi-directionally communicate real-time audio signals over a synchronous circuit-switched transport

and an asynchronous packet-switched transport over the short range radio link either sequentially or simultaneously.

[0036] FIG. 4 is an architecture diagram 400 including a mode controller 456. Mode controller may include a decision making level indicated by the decision controller 442 as illustrated in FIG. 2 as 242, a preparation level indicated by the synchronization controller 446 and an executing level indicated by the switch 444 in combination with the queue controller 440. As discussed above, the decision controller 442 may receive signals from one or more of the power management criteria input 428, the RF quality measurements input 430, the network criteria input 432, and the manual control input 434. The decision controller 442 can decide when to switch from SCO to ACL or vice-versa based on the inputs that can include the described four inputs.

[0037] The preparation level can contain a synchronization controller 446. A signal flow diagram of the synchronization controller 446 is illustrated in FIG. 3 previously discussed. The executing level can provide the switch 444 between the SCO and ACL after the time/signaling messages are exchanged between the headset 102 (see FIG. 1) and the handset 104 to synchronize the switching. The hardware and/or software switch 244 (see FIG. 2) for transport selection of one of the transports for real-time audio signal communication may be manually activated and/or automatically activated and based upon operating conditions to choose between the SCO transport 436 which may be the default transport, and the ACL transport 438. While the decision to switch is made by the decision controller 442, the operation to switch may be performed by a software and/or hardware switch 444 and a queue controller 440 at the executing level. The queue controller 440 operation may be

performed between the switch 444 and the encoder / decoder 411 such as a codec (D/A-A/D).

[0038] A description of a queue controller 440 is **hereby incorporated by reference to substantially simultaneously filed** METHODS AND DEVICES OF A QUEUE CONTROLLER FOR DUAL MODE BIDIRECTIONAL AUDIO COMMUNICATION, **on the date of 31 October 2006, having received a serial number _____, and patent number _____.** The output of the switch 444 is processed by a queue controller 440 that can be configured to deliver at least one packet between transmission of the synchronous transport 436 and the asynchronous transport 438. That is, upon transport selection according to the selection module 126 (see FIG. 1), the switch between the synchronous circuit-switched transport and an asynchronous packet-switched transport can be processed by the queue controller 440 that can be configured to deliver at least one packet to the encoder/decoder when at least one of a wireless audio terminal and an audio gateway is in audio communication.

[0039] The described dual mode headset 102 (see FIG. 1) can have a single D/A and A/D encoder/decoder that may be a codec that can support both types of encoded packets, SCO and ACL carrying voice payload. The encoder/decoder can have two queues including a first queue 562 (see FIG. 5) for incoming packets, for example from a microphone, and including a second queue 564 for outgoing packets, for example to a speaker. The packets from SCO and ACL links can have different encoder parameters such as different packet sizes, packet types, or sampling rates. Accordingly, the mode controller 456 (see FIG. 4) can monitor the buffers when switching between the SCO and the ACL modes.

[0040] FIG. 5 illustrates some processes of the above-mentioned queue controller. To prevent the encoder 511 processing the outgoing queue 564 from not receiving required data and thus being rendered inoperable, the queue contents can be flushed and/or cleared when switching between modes and the packet generator 566 can pad the queue during the mode switch. That is, heterogeneity of the queue can render the encoder inoperable. For example, measures can be taken to determine, based on a first encoder parameter and a second encoder parameter, whether the queue 564 anticipates to contain heterogeneous audio packet types, that is a group of audio packets with differing encoder parameters. Heterogeneous packet types can arise from different encodings for the SCO and ACL modes such as different sampling rates and quantization. If the queue contains packets with different encoding, then the queue 564 is changed from having heterogeneous packet types to a queue having homogeneous packet types, that is a group of audio packets with identical encoder parameters. In one embodiment, the packets generator 566 can supply empty packets in case of stream interruption. In another embodiment the packets generator 566 may use a packet concealment or interpolation method to enhance the user's perceivable quality of experience. Empty packets from the empty packet generator 566 can be processed in queue 562 or queue 564.

[0041] As mentioned above, the SCO and the ACL may be processed sequentially or simultaneously. In a sequential processing the switch may be characterized as a hard handoff. In simultaneously processing, the switch may be characterized as a soft handoff. Different conditions are considered for a soft handoff or a hard handoff as is described below. Since a payload of a single input stream may be processed by the encoder/decoder 511, there may be processing overhead in terms of time taken to

establish a new link when there is a change in transport. In a soft handoff, there can be a period of time where two transports are processed simultaneously. As the first transport continues through the queue controller input queue, a second transport can be buffered. Once the second is buffered, the first transport can be flushed and the second transport can populate the queue. In this way, there may be simultaneous processing of two transports. As discussed in more detail below, a "make before break" soft handoff process may involve packet concealment. On the other hand, in a hard handoff the first transport can be flushed and the second transport can be populated sequentially, but at the cost of the time taken to establish a new link when there is a change in transport. As will be discussed in more detail below, a "break before make" hard handoff process may involve empty packets and/or packet concealment.

[0042] It is understood that the queue controller 558 and handoff process are slightly different but may be considered inter-related. The queue controller 558 can prevent buffer under or over-runs for the pulse code modulated (PCM) data to and from the D/A and A/D in the cases when the encoder parameters are changed. For example, parameters can be changed when going from a case where the sampling rate is 8 KHz to one where the sampling rate is 16 KHz or even 44.1 KHz, thus changing from SCO audio to wideband ACL packetized audio or even stereo audio. The queue controller 540 may be needed in any instance where the encoder parameters changed because in that instance the 8 KHz audio packets in the buffer could not be consumed by the codec when it was operating at another sampling rate, 16 KHz, and would cause the encoder to become inoperable.

[0043] In the above-discussed case, the 8 KHz samples may be flushed and filled with packets to prevent the D/A from starving. Empty packets or some form of packet concealment may fill the packets when the encoder parameters change, for example sampling rate and packet size.

[0044] A hard handoff, or a "Break before Make" connection, can be utilized where the device 102 (see FIG. 1) terminates a SCO connection for audio and then brings up an ACL connection for audio, or vice-versa. Similarly a soft handoff or "Make before Break" connection can be utilized where the device 102 brings up an ACL channel for audio before terminating the SCO channel for audio so for a brief period of time both connections may be broadcasted simultaneously.

[0045] A soft handoff may take place without loss of information and therefore the switch can appear seamless to the user. However, a soft handoff may require more processing power and memory to maintain. Therefore the limitations on handoffs may be implementation and hardware specific, though power/battery life can be a control, specifically utilizing hard handoffs when battery power is low. Soft handoffs may not require empty packet transmissions and the hard handoff may be discernable to the user since the connection may be broken and enough information may be lost.

[0046] As mentioned, the handoffs may be related to the queue controller. Described are four scenarios in particular since the operation of the queue controller 540 and handover mechanisms may not be necessarily dependent. The queue controller 540 may be utilized when either the soft or hard handoffs change the encoder parameters. For instance when going from SCO to ACL the sampling rate could change from 8 to 16 KHz to improve speech quality or when switching from

ACL to SCO the sampling rate may change from 16 KHz to 8 KHz since SCO may only support the lower audio quality.

[0047] As mentioned there are four scenarios discussed below. Hard handovers may include two scenarios, specifically, the same encoder parameters, and a change in encoder parameters. The hard handover case may require the queue controller 540 to send empty packets or conceal packet losses since the connection may be broken, information will be lost, and then a new connection will be re-established. The steps for each may be:

1. Receive signal to change transports;
2. Break SCO or ACL connection;
3. Make ACL or SCO connection; and
4. Prevent queue from starving regardless of change in codec parameters.

[0048] In the case of a soft handoff with the same codec parameters, the transmission of empty packets or concealment of packet losses may not be required since no data should be lost in such a scenario. The steps may be:

1. Receive signal to change transports;
2. Make additional ACL or SCO connection;
3. Break current SCO or ACL connection; and
4. Change inputs to D/A queue controller (Queue OUT) and similarly for A/D queue controller (Queue IN).

[0049] The case of a soft handover where the encoder parameters are changed may require the use of the Queue Controller 540 to insert new packets, not because data is lost but because of the change in sampling rates as illustrated in the previously mentioned figure. In this scenario the steps may be:

1. Receive signal to change transports;

2. Make additional ACL or SCO connection;

3. Break current SCO or ACL connection; and

4. Change inputs to D/A queue controller (Queue OUT) and add packets for transitioning of codec parameters and similarly for A/D (Queue IN) queue controller.

[0050] Still referring to FIG. 5, the timer 567 can implement synchronization between two devices as illustrated in the signal flow diagram of FIG. 3. The state machine 568 can be an event driver to control signals corresponding to a change in state or conditions as illustrated in FIGs. 2 and 4. The ACL path 569 can be the same respective paths of FIG. 7 to block 783, 785, and 786 to then be processed over the air link. The SCO path 570 can be the same respective paths of FIG. 7 to block 782 to then be processed over the air link.

[0051] Fig. 6 is a flowchart of a method 600 of a dual mode wireless device and/or a plurality of devices of a system according to an embodiment. The steps of the flowchart are described above with respect to the FIGS. As shown in FIG. 1, a short range radio link can be established for real-time audio signals received from a single source 620 according to establishing module 120 and/or 121 (see FIG. 1). As also shown in FIG. 1, real-time audio signals can be communicated bi-directionally over a radio link using a synchronous circuit-switched transport mode (e.g., SCO) 636 and/or using an asynchronous packet-switched transport mode (e.g., ACL) 638 in accordance with synchronous connection oriented communication module 122 and/or 123 and asynchronous connectionless communication module 124 and/or 125. FIGS. 2 and 4 illustrate one of the transports is selected for real-time audio signal

communication based upon operating conditions 626, as described above and according to selecting module 126 and/or 127, power management criteria module 128 and/or 129, radio frequency quality measurement module 130 and/or 131, network criteria module 132 and/or 133 and/or manual selection module 134 and/or 135. FIGS. 4 and 5 show switching between one transport and the other is processed by the queue controller 640 according to queue controller module 140 and/or 141. It is understood that fewer or more steps may be included in the above-described method.

[0052] FIG. 7 depicts some architecture components 700 of a Bluetooth enabled I/O device such as a headset 102 (see FIG. 1). The mode controller 756, the switch 744, queue controller 740 and encoder 711 were discussed above. A microphone 780 may provide input to the encoder 711, and a speaker 781 may receive output from the decoder 711. When SCO audio transport is used, continuously variable slope delta (CVSD) encoding takes place within the hardware of the baseband processor 782.

[0053] When ACL audio transport is used, audio compression and decompression 783 takes place within an application layer 784. The ACL audio packets conform to data protocols such as a real-time transport protocol (RTP), a user datagram protocol (UDP), and an Internet Protocol (IP) 785. Packets may undergo header compression/decompression 786. A user interface 787 may be accessed using for example, a multifunction button, for manual control of switching between one transport and another.

[0054] Bluetooth profiles 788 may use the ACL transport. Such profiles can include signaling for a handsfree profile (HFP) and data for a serial port profile (SPP), a personal area networking profile (PAN), a service discovery application profile

(SDAP), and a generic access profile (GAP). Moreover, the ACL packets may further conform to protocols such as a logical link control and adaptation protocol (L2CAP), a link manager protocol (LMP), a service discovery protocol (SDP), and a Bluetooth network encapsulation protocol (BNEP) 789. Radio frequency communication protocol (RFCOMM) provides emulation of serial ports within L2CAP.

[0055] As described in detail above, during transmission and receipt of audio signals, and in particular voice signals, a Bluetooth device can switch between a synchronous circuit-switched transport and an asynchronous packet-switched transport, each having particular characteristics and benefits and are mutually exclusive for voice, except, for example during the switching process where they may be simultaneously transmitted. The ability to use two transports for bi-directional audio signals with the ability to seamlessly handoff between the two can significantly improve the voice quality over Bluetooth and the user's handsfree experience. In a system such as a Bluetooth headset and a Bluetooth enabled handset, one or the other device can make a transport selection of one of the transports for real-time audio signal communication based upon operating conditions and/or manual activation. Bluetooth devices and particularly, headsets enjoy popularity because they provide users the ability to communicate while seamlessly operating in different environments. Accordingly, providing improved voice quality over Bluetooth has become important for mobile device manufacturers. A headset as described above can be backwards compatible with an existing handset using the SCO transport. While a handset as described may operate better with a headset according to this disclosure. As described above, improvements made to bi-directional audio communication, and in particular voice quality over Bluetooth may be beneficial.

[0056] This disclosure is intended to explain how to fashion and use various embodiments in accordance with the technology rather than to limit the true, intended, and fair scope and spirit thereof. The foregoing description is not intended to be exhaustive or to be limited to the precise forms disclosed. Modifications or variations are possible in light of the above teachings. The embodiment(s) was chosen and described to provide the best illustration of the principle of the described technology and its practical application, and to enable one of ordinary skill in the art to utilize the technology in various embodiments and with various modifications as are suited to the particular use contemplated. All such modifications and variations are within the scope of the invention as determined by the appended claims, as may be amended during the pendency of this application for patent, and all equivalents thereof, when interpreted in accordance with the breadth to which they are fairly, legally and equitably entitled.

CLAIMS:

1. An I/O device, comprising:

a controller;

a transceiver coupled to the controller, the transceiver configured to establish a short range radio link and bi-directionally communicate real-time audio signals over a synchronous circuit-switched transport and an asynchronous packet-switched transport over the short range radio link from a single source of real-time audio signals; and

a switch for transport selection of one of the transports for real-time audio signal communication based upon operating conditions.

2. The device of claim 1 wherein the I/O device is a wireless audio terminal.

3. The device of claim 1 wherein the I/O device is an audio gateway.

4. The device of claim 1 wherein the synchronous circuit-switched transport is a Bluetooth synchronous connection-oriented or extended synchronous connection-oriented transport.

5. The device of claim 1 wherein the asynchronous packet-switched transport is a Bluetooth asynchronous connection-oriented transport.

6. The device of claim 1 wherein transport selection is automatically activated.

7. The device of claim 6 wherein transport selection is based on at least one of power management criteria, radio frequency quality measurements and network criteria.

8. The device of claim 1 wherein transport selection is manually activated.

9. The device of claim 1, bi-directionally communicating real-time audio signals between the wireless audio terminal and the audio gateway over a synchronous circuit-switched transport and simultaneously an asynchronous packet-switched transport of the short range radio link.

10. The device of claim 1 wherein a switch is processed by a queue controller configured to deliver at least one packet between transmission of the synchronous transport and the asynchronous transport.

11. The device of claim 1 wherein audio signals are voice signals.

12. A method of an I/O device, comprising:

bi-directionally communicating with another I/O device over a short range radio link of real-time audio signals over a synchronous circuit-switched transport and an asynchronous packet-switched transport over the short range radio link from a single source of real-time audio signals; and

selecting one of the transports for real-time audio signal communication based upon operating conditions.

13. The method of claim 12, bi-directionally communicating real-time audio signals between the wireless audio terminal and the audio gateway over a synchronous circuit-switched transport and simultaneously an asynchronous packet-switched transport of the short range radio link.

14. The method of claim 12 wherein the synchronous circuit-switched transport is a Bluetooth synchronous connection-oriented or extended synchronous connection-oriented transport.

15. The method of claim 12 wherein the asynchronous packet-switched transport is a Bluetooth asynchronous connection-oriented transport.

16. The method of claim 12 wherein transport selection is automatically activated.

17. The method of claim 16 wherein the transport selection is based on at least one of power management criteria, radio frequency quality measurements and network criteria.

18. The method of claim 12 wherein transport selection is manually activated.

19. The method of claim 12, further comprising:

switching processed by a queue controller configured to deliver at least one packet when the wireless audio terminal is switching audio communication between the synchronous transport and the asynchronous transport.

20. The method of claim 12 wherein audio signals are voice signals.

21. A method of a dual mode wireless headset system, including a wireless audio terminal and an audio gateway, the method comprising:

establishing a short range radio link between the wireless audio terminal and the audio gateway;

bi-directionally communicating real-time audio signals between the wireless audio terminal and the audio gateway over a synchronous circuit-switched transport and an asynchronous packet-switched transport of the short range radio link from at least one single source; and

selecting one of the transports for real-time audio signal communication based operating conditions of at least one of the wireless audio terminal and the audio gateway.

22. The method of claim 21 wherein the synchronous circuit-switched transport is a Bluetooth synchronous connection-oriented or extended synchronous connection-oriented transport.

23. The method of claim 21 wherein the asynchronous packet-switched transport is a Bluetooth asynchronous connection-oriented transport.

24. The method of claim 21 wherein transport selection is automatically activated.

25. The method of claim 25 wherein transport selection is based on at least one of radio frequency quality measurements, network criteria and power management criteria

26. The method of claim 21 wherein transport selection is manually activated.

27. The method of claim 21, further comprising:

switching processed by a queue controller configured to deliver at least one packet when the wireless audio terminal is switching audio communication between the synchronous transport and the asynchronous transport.

28. The method of claim 21, upon transport selection, further comprising:

switching between the synchronous circuit-switched transport and an asynchronous packet-switched transport that is processed by a queue controller configured to deliver at least one packet when at least one of the wireless audio terminal and the audio gateway is in audio communication.

29. The method of claim 21 wherein switching is processed by a queue controller configured to deliver at least one packet when the wireless audio terminal is switching audio communication between the synchronous transport and the asynchronous transport.

30. The method of claim 21 wherein audio signals are voice signals.

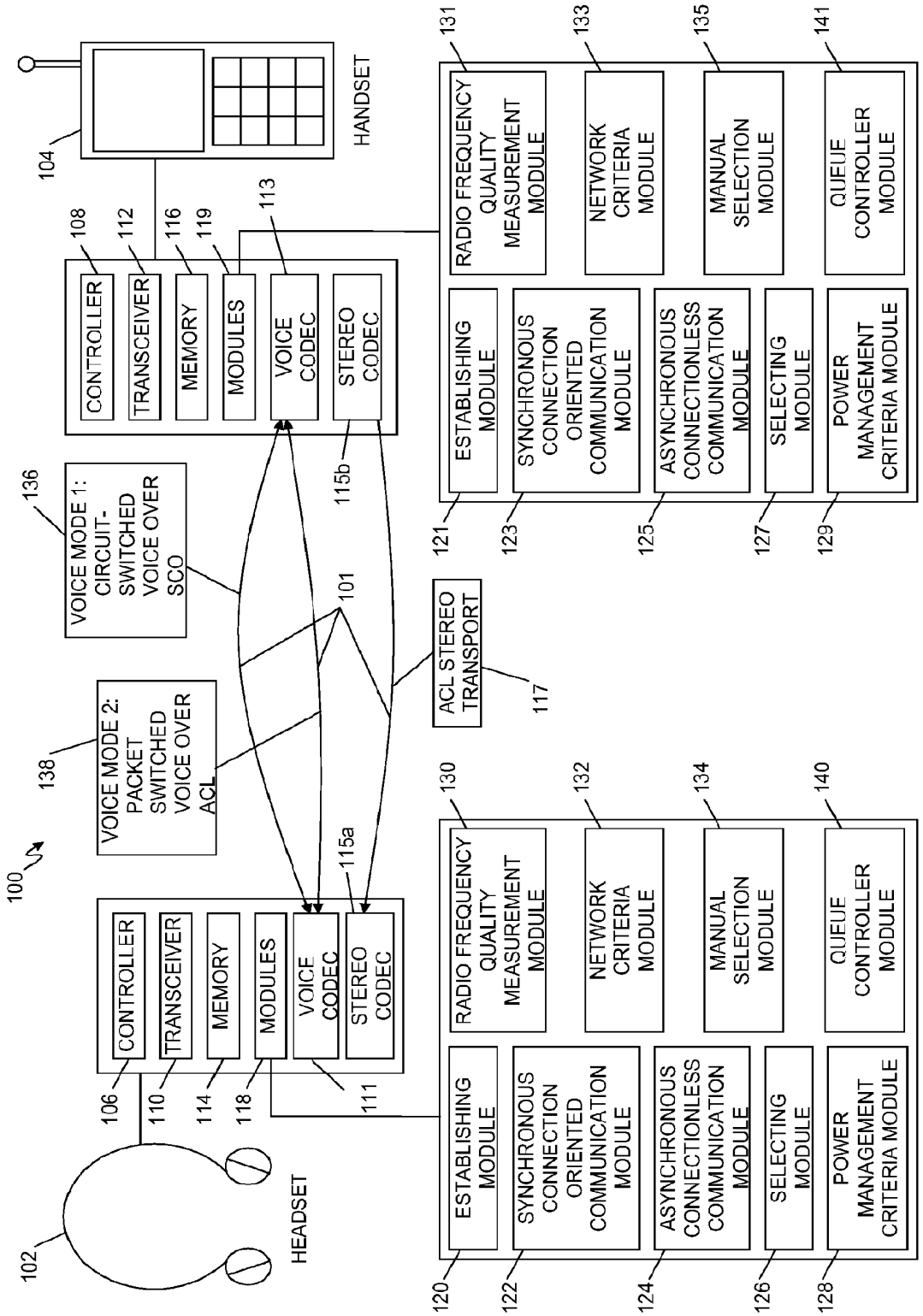
100
HANDSET
104
CONTROLLER
TRANSCEIVER
MEMORY
MODULES
VOICE CODEC
STEREO CODEC
108
112
116
119
113
115b
HEADSET
102
106
110
114
118
111
115a
VOICE MODE 1: CIRCUIT-SWITCHED VOICE OVER SCO
136
VOICE MODE 2: PACKET SWITCHED VOICE OVER ACL
138
ACL STEREO TRANSPORT
117
101
RADIO FREQUENCY QUALITY MEASUREMENT MODULE
NETWORK CRITERIA MODULE
MANUAL SELECTION MODULE
QUEUE CONTROLLER MODULE
ESTABLISHING MODULE
SYNCHRONOUS CONNECTION ORIENTED COMMUNICATION MODULE
ASYNCHRONOUS CONNECTIONLESS COMMUNICATION MODULE
SELECTING MODULE
POWER MANAGEMENT CRITERIA MODULE
131
133
135
141
121
123
125
127
129
130
132
134
140
120
122
124
126
128

FIG. 1

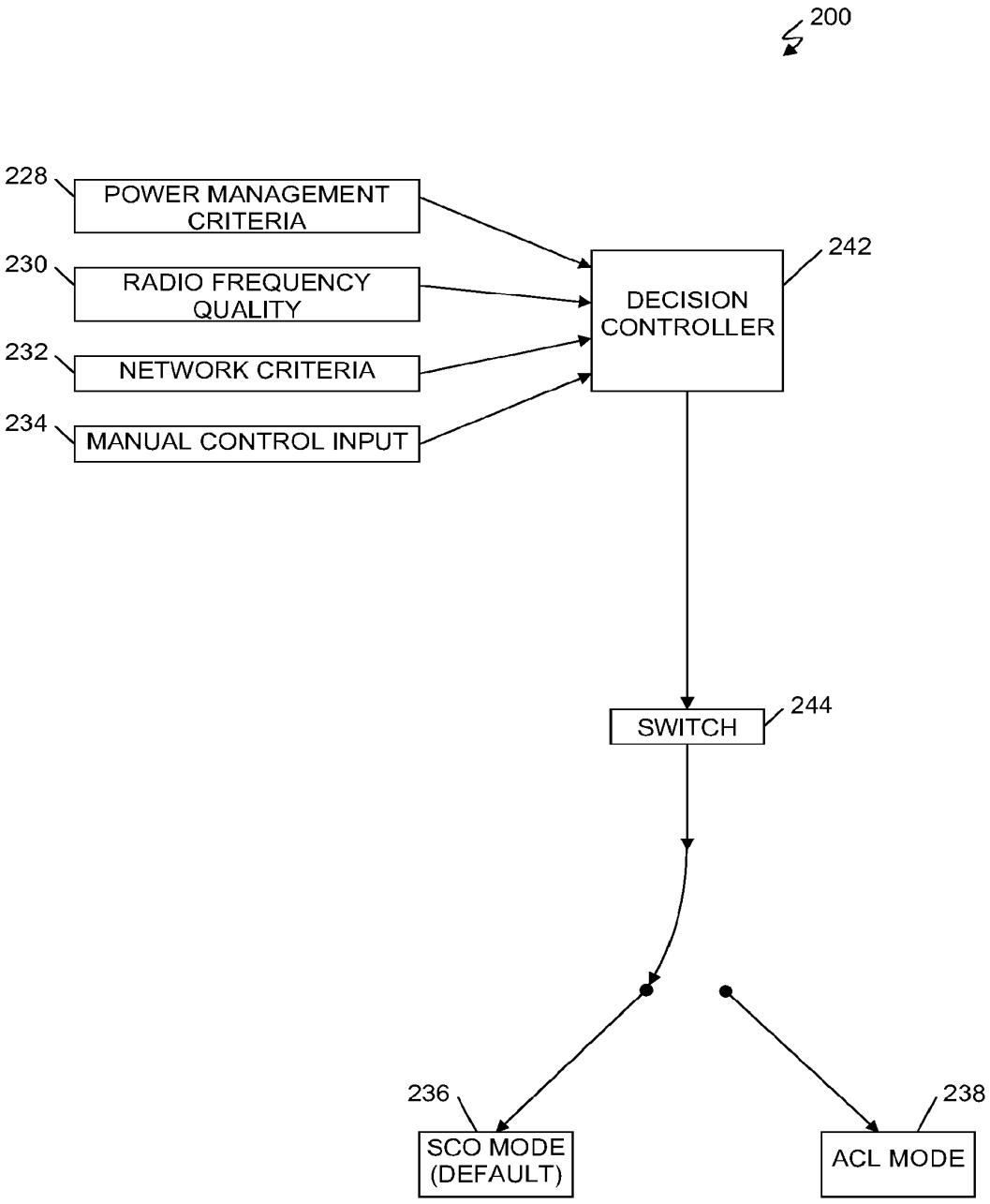
200
228
POWER MANAGEMENT CRITERIA
230
RADIO FREQUENCY QUALITY
232
NETWORK CRITERIA
234
MANUAL CONTROL INPUT
242
DECISION CONTROLLER
244
SWITCH
236
SCO MODE (DEFAULT)
238
ACL MODE

FIG. 2

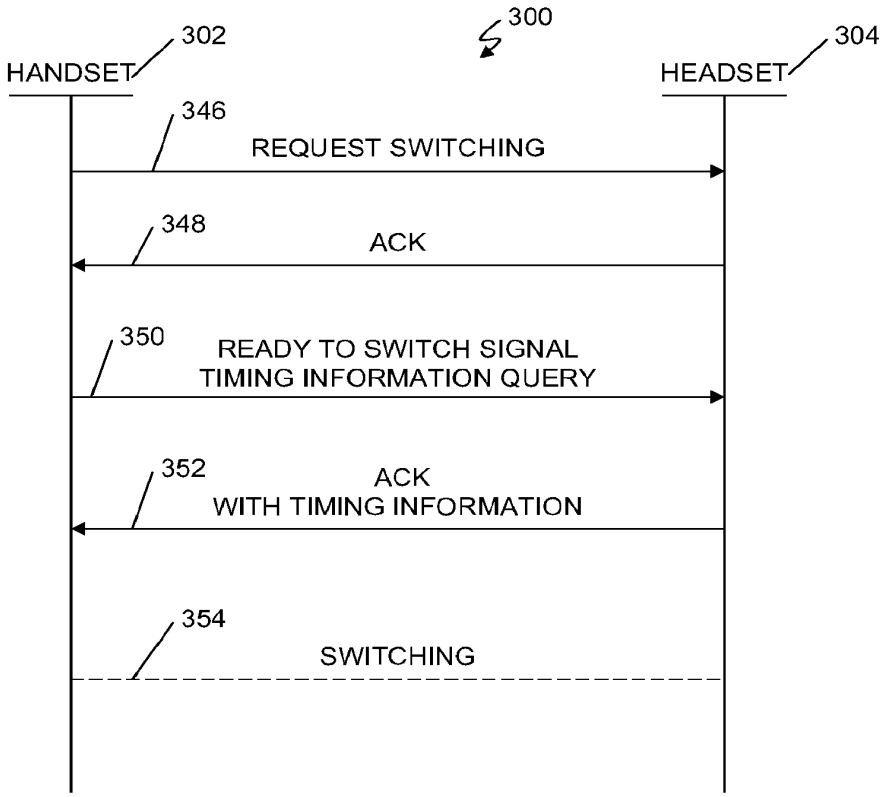
300
302
HANDSET
304
HEADSET
346
REQUEST SWITCHING
348
ACK
350
READY TO SWITCH SIGNAL
TIMING INFORMATION QUERY
352
ACK
WITH TIMING INFORMATION
354
SWITCHING

FIG. 3

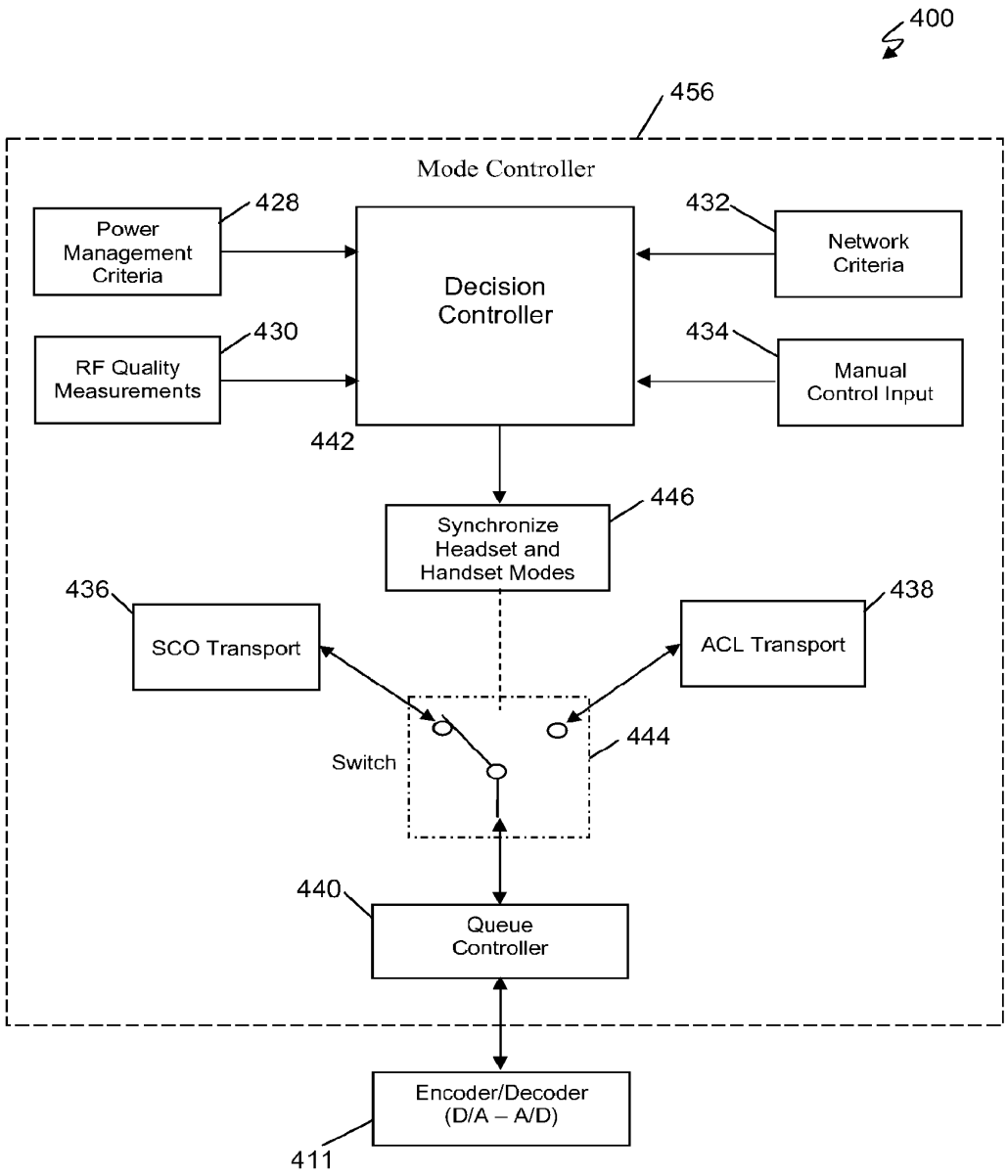
400
456
Mode Controller
428
Power Management Criteria
430
RF Quality Measurements
Decision Controller
442
432
Network Criteria
434
Manual Control Input
446
Synchronize Headset and Handset Modes
436
SCO Transport
438
ACL Transport
Switch
444
440
Queue Controller
Encoder/Decoder (D/A – A/D)
411

FIG. 4

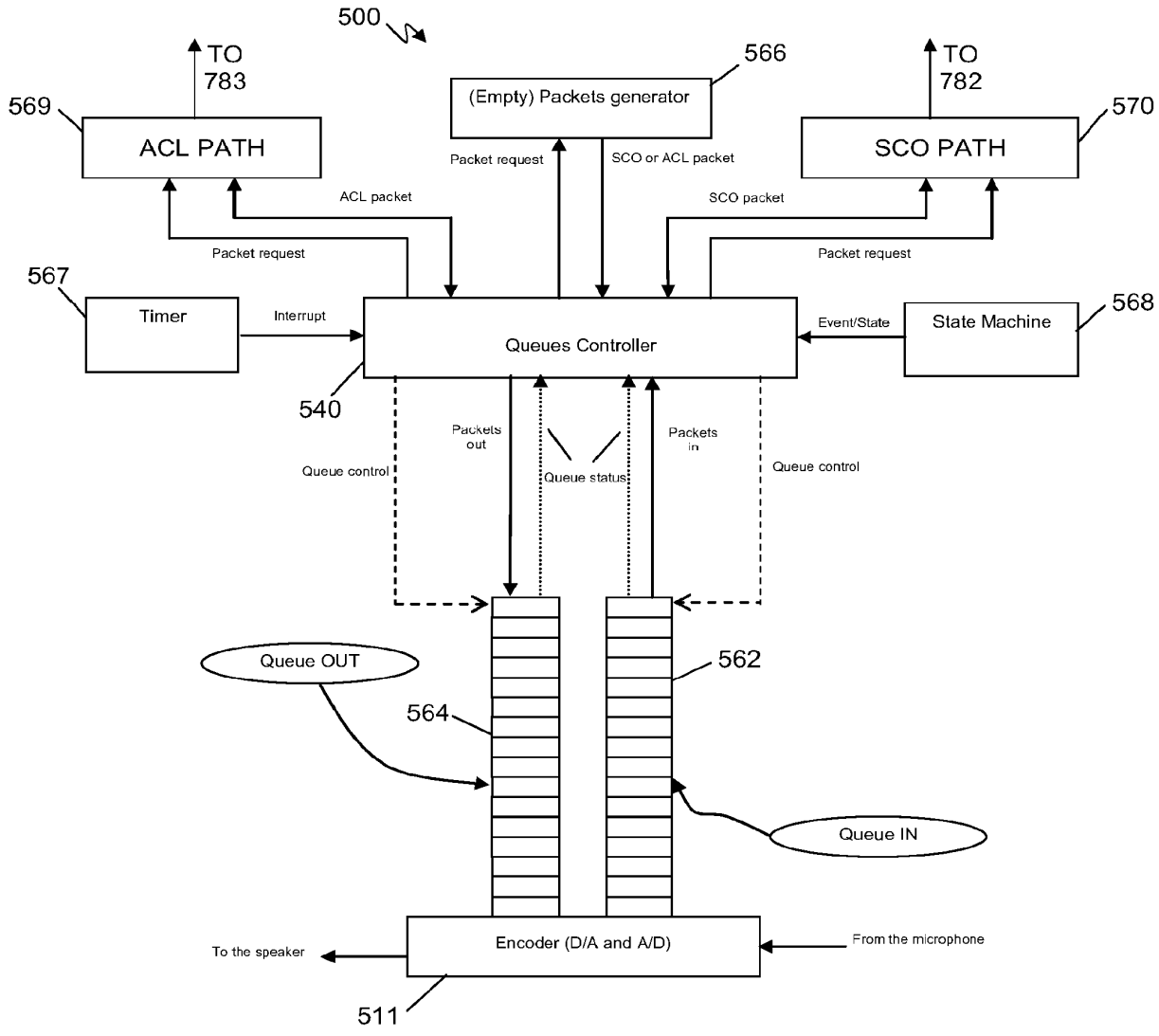
500
TO 783
569
ACL PATH
(Empty) Packets generator
566
TO 782
570
SCO PATH
Packet request
SCO or ACL packet
ACL packet
SCO packet
Packet request
Packet request
567
Timer
Interrupt
Queues Controller
Event/State
State Machine
568
540
Packets out
Packets in
Queue control
Queue status
Queue control
Queue OUT
562
564
Queue IN
To the speaker
Encoder (D/A and A/D)
From the microphone
511

FIG. 5

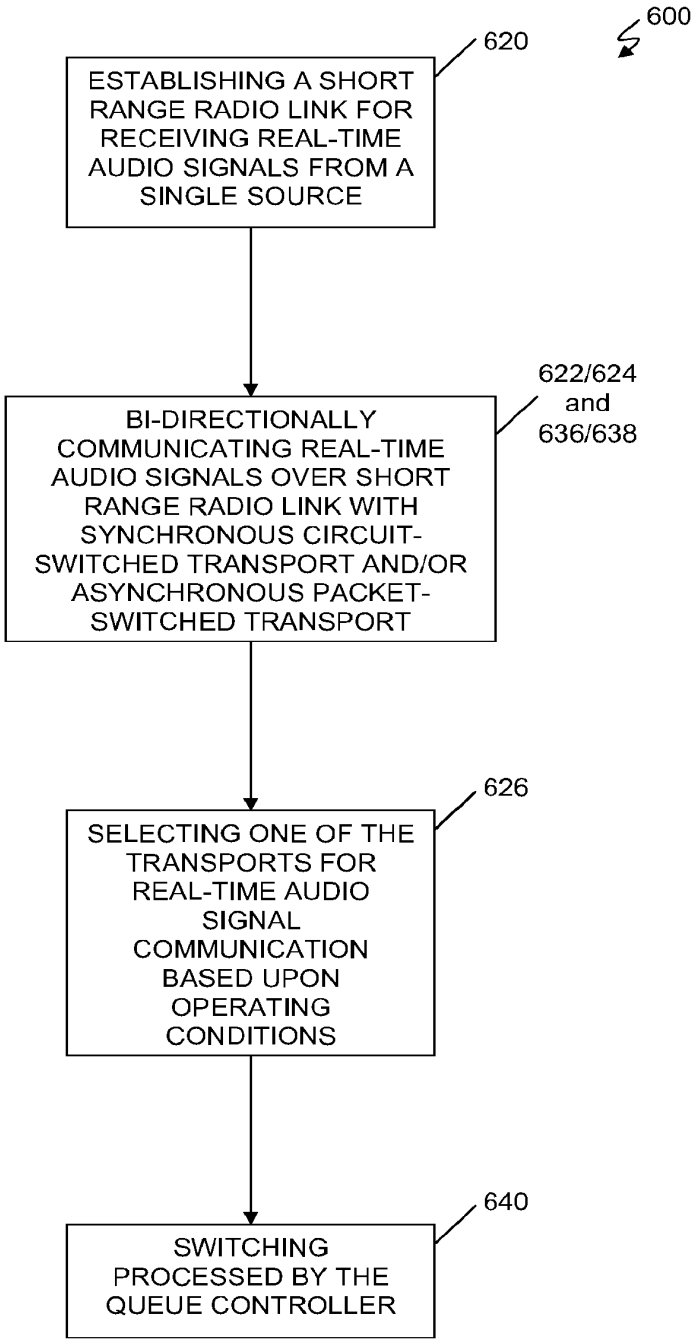
600
620
ESTABLISHING A SHORT RANGE RADIO LINK FOR RECEIVING REAL-TIME AUDIO SIGNALS FROM A SINGLE SOURCE
622/624 and 636/638
BI-DIRECTIONALLY COMMUNICATING REAL-TIME AUDIO SIGNALS OVER SHORT RANGE RADIO LINK WITH SYNCHRONOUS CIRCUIT-SWITCHED TRANSPORT AND/OR ASYNCHRONOUS PACKET-SWITCHED TRANSPORT
626
SELECTING ONE OF THE TRANSPORTS FOR REAL-TIME AUDIO SIGNAL COMMUNICATION BASED UPON OPERATING CONDITIONS
640
SWITCHING PROCESSED BY THE QUEUE CONTROLLER

FIG. 6

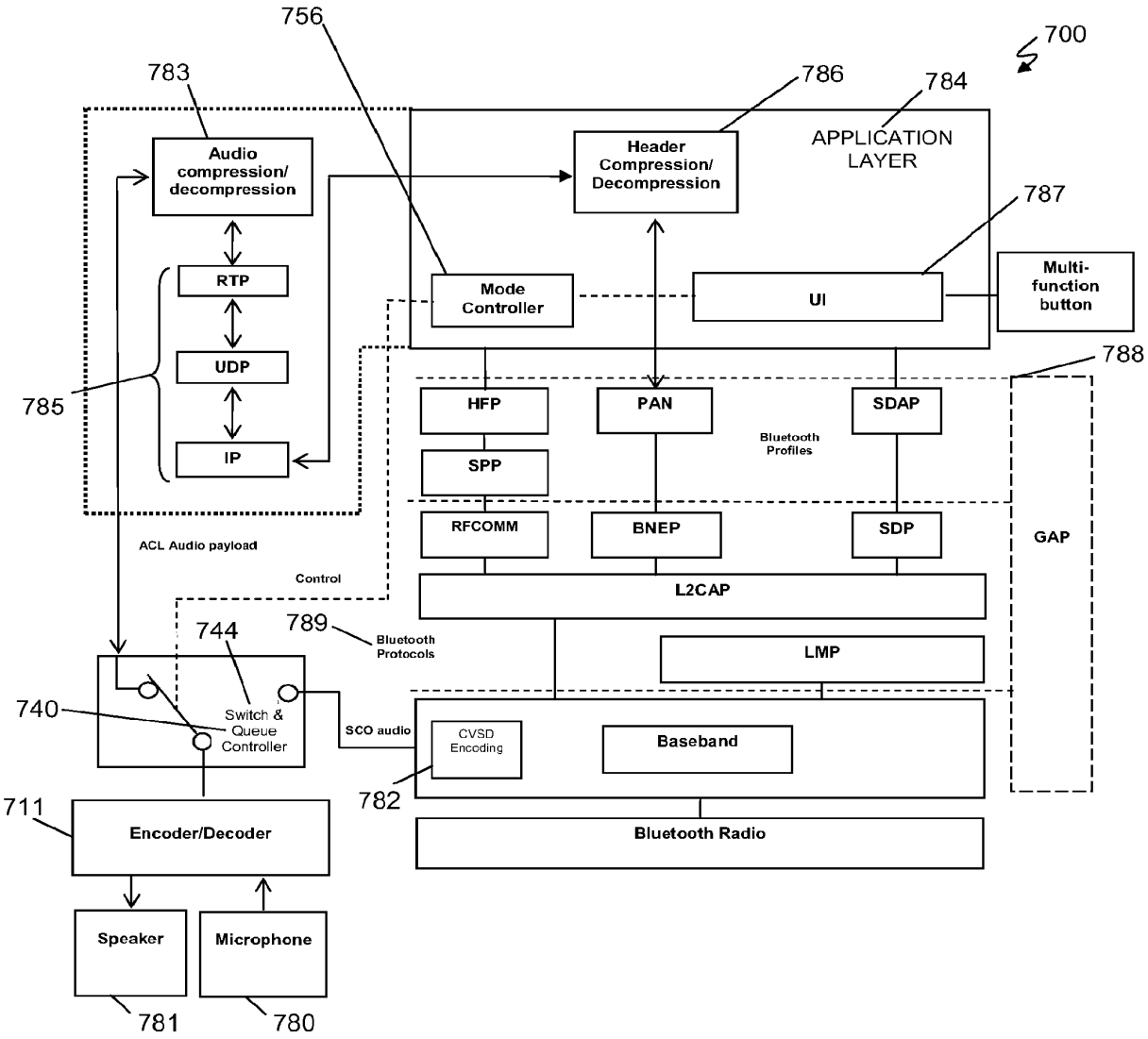
700
756
783
786
784
APPLICATION LAYER
Audio compression/ decompression
Header Compression/ Decompression
787
RTP
Mode Controller
UI
Multi-function button
788
UDP
785
HFP
PAN
SDAP
IP
SPP
Bluetooth Profiles
RFCOMM
BNEP
SDP
GAP
ACL Audio payload
Control
L2CAP
744
789
Bluetooth Protocols
LMP
740
Switch & Queue Controller
SCO audio
CVSD Encoding
Baseband
782
711
Encoder/Decoder
Bluetooth Radio
Speaker
Microphone
781
780

FIG. 7

(12) INTERNATIONAL APPLICATION PUBLISHED UNDER THE PATENT COOPERATION TREATY (PCT)

(19) World Intellectual Property Organization
International Bureau

(43) International Publication Date
9 July 2009 (09.07.2009)

PCT

(10) International Publication Number
WO 2009/086555 A1

(51) International Patent Classification:
H04R 25/00 (2006.01)

(21) International Application Number:
PCT/US2008/088656

(22) International Filing Date:
31 December 2008 (31.12.2008)

(25) Filing Language: English

(26) Publication Language: English

(30) Priority Data:
61/009,690 31 December 2007 (31.12.2007) US

(71) Applicant *(for all designated States except US)*: **KOSS CORPORATION** [US/US]; 4129 North Port Washington Road, Milwaukee, WI 53212 (US).

(72) Inventors; and

(75) Inventors/Applicants *(for US only)*: **MLODZIKOWSKI, Allan** [US/US]; S104 W21015 Cindy Drive, Muskego, WI 53150 (US). **ROBERTS, Lain** [GB/US]; Chicago, IL (US). **AYE, George** [GB/US]; Chicago, IL (US). **O'LEARY, Jerry** [GB/US]; Chicago, IL (US). **KOSS, Michael** [US/US]; River Hills, WI (US). **THALER, Martin** [US/US]; Chicago, IL (US). **PELLAND, Michael** [US/US]; N4626 Wildwood Ln., Princeton, WI 54968 (US).

(74) Agents: **LAVENDER, Mark, D.** et al.; K & L Gates LLP, Henry W. Oliver Building, 535 Smithfield Street, Pittsburgh, PA 15222-2312 (US).

(81) Designated States *(unless otherwise indicated, for every kind of national protection available)*: AE, AG, AL, AM, AO, AT, AU, AZ, BA, BB, BG, BH, BR, BW, BY, BZ, CA, CH, CN, CO, CR, CU, CZ, DE, DK, DM, DO, DZ, EC, EE, EG, ES, FI, GB, GD, GE, GH, GM, GT, HN, HR, HU, ID, IL, IN, IS, JP, KE, KG, KM, KN, KP, KR, KZ, LA, LC, LK, LR, LS, LT, LU, LY, MA, MD, ME, MG, MK, MN, MW, MX, MY, MZ, NA, NG, NI, NO, NZ, OM, PG, PH, PL, PT, RO, RS, RU, SC, SD, SE, SG, SK, SL, SM, ST, SV, SY, TJ, TM, TN, TR, TT, TZ, UA, UG, US, UZ, VC, VN, ZA, ZM, ZW.

(84) Designated States *(unless otherwise indicated, for every kind of regional protection available)*: ARIPO (BW, GH,

[Continued on next page]

(54) Title: ADJUSTABLE SHAPE EARPHONE

(57) Abstract: This disclosure relates to an adjustable ear insert, such as an earbud style earphone, that may be inserted in a user's ear canal in a compact configuration and adjusted by a user to expand and fit snugly against the ear canal.

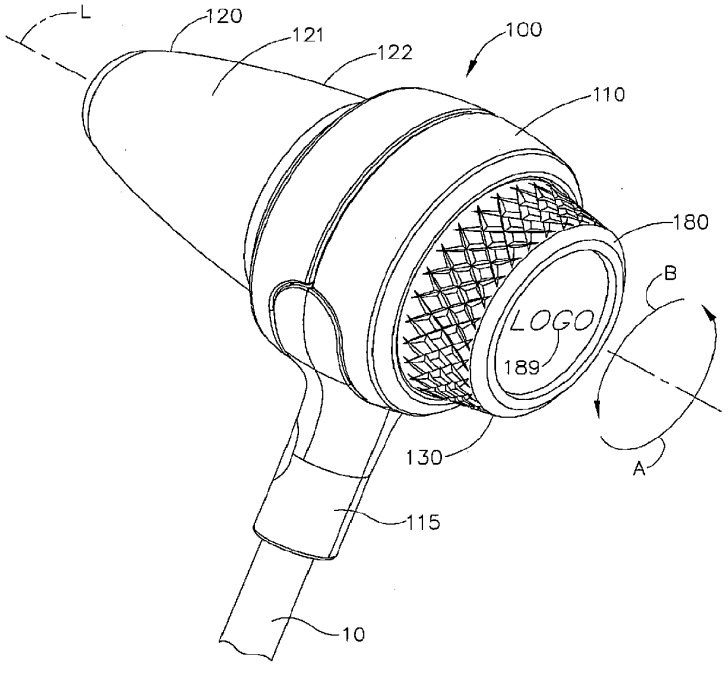

FIG. 1A

WO 2009/086555 A1

GM, KE, LS, MW, MZ, NA, SD, SL, SZ, TZ, UG, ZM, ZW), Eurasian (AM, AZ, BY, KG, KZ, MD, RU, TJ, TM), European (AT, BE, BG, CH, CY, CZ, DE, DK, EE, ES, FI, FR, GB, GR, HR, HU, IE, IS, IT, LT, LU, LV, MC, MT, NL, NO, PL, PT, RO, SE, SI, SK, TR), OAPI (BF, BJ, CF, CG, CI, CM, GA, GN, GQ, GW, ML, MR, NE, SN, TD, TG).

Declarations under Rule 4.17:

— *as to applicant's entitlement to apply for and be granted a patent (Rule 4.17(ii))*

— *as to the applicant's entitlement to claim the priority of the earlier application (Rule 4.17(iii))*

Published:

— *with international search report*

— *with amended claims*

TITLE

ADJUSTABLE SHAPE EARPHONE

PRIORITY CLAIM

The present application claims priority to U.S. provisional application Serial No. 61/009,690, titled "ADJUSTABLE FIT EARBUD, CLOTH COVERED CORD AND CORD CLIP ZIPPER," filed December 31, 2007, which is incorporated herein by reference in its entirety.

BACKGROUND

The present disclosure generally relates to adjustable ear inserts and more particularly to earphones for listening to audio media, such as that which may be played from portable audio devices.

Earphones are usually a pair of small loudspeakers that are provided with a mechanism to hold them close to a user's ears and a means of connecting them to a signal source such as an audio amplifier, radio, or portable audio device, such as a CD or MP3 player.

Earbuds are earphones of a small size that are placed directly outside or in the ear canal. Some earbuds, called external-canal earbuds, are designed to sit outside the ear canal. These are generally inexpensive and are favored for their portability and convenience. However, due to their inability to provide sound isolation, they are incapable of delivering the same dynamic range offered by many full-sized headphones and ear-canal earbuds (described below) for a given volume level. As a result, they are often used at higher volumes in order to drown out noise from the user's surroundings. Over time, earbuds became a common type of earphone bundled with portable audio devices.

Internal-canal earbuds are earbuds that are inserted directly into the ear canal. These offer portability similar to external-canal earbuds, and also act like earplugs to block out environmental noise. There are two main types of internal-canal earbuds: universal and custom. Universal internal-canal earphones provide one or more stock sleeve size(s) to fit various ear canals, which are

commonly made out of silicone rubber, elastomer, or foam, for noise isolation. Universal internal-canal earbuds are marketed typically to casual listeners and are relatively inexpensive, though some offer very high audio quality.

Custom internal-canal earbuds are fitted to individuals. Castings of the ear canals are made, usually by an audiologist. The manufacturer uses the castings to create custom-molded silicone rubber or elastomer plugs that provide added comfort and noise isolation. Because of the individualized labor involved, custom internal-canal earbuds are more expensive than universal internal-canal earbuds.

Consequently, there is a need for improved internal-canal earbuds. The foregoing discussion is intended only to illustrate some of the shortcomings present in the field of the invention at the time, and should not be taken as a disavowal of claim scope.

SUMMARY

The present invention includes, in various embodiments, an adjustable shape earphone. In at least one embodiment, the earphone includes: (i) a housing having a first side and a second side; (ii) a resilient cushion attached to the first side of the housing, the resilient cushion having a compact shape and an opening; (iii) at least one cantilever arm protruding from the first side of the housing, where at least part of the cantilever arm is located within the opening of the resilient cushion; (iv) a dial rotatably mounted in the housing, where at least part of the dial extends from the second side of the housing and where the dial includes threads; and (v) an actuator comprising a first portion and a second portion, where the second portion has threads. The actuator is mounted slidably in the housing, and the actuator threads operably engage the dial threads such that rotation of the dial in a first direction translates the first portion of the rigid actuator into contact with the cantilever arm. Further, the first portion of the actuator is configured to bend the cantilever arm into the resilient cushion as the actuator contacts the arm, and the cantilever arm is subsequently configured to force the resilient cushion to have an expanded shape as the cantilever arm bends into the cushion.

In another embodiment, the adjustable earphone includes: (i) a housing having a first side and a second side, where the first side of the housing is configured to attach to a cushion; (ii) at least one cantilever arm protruding from the first side of the housing, where at least part of the cantilever arm is configured to be located within an opening of the cushion when the cushion is attached to the housing; (iii) a dial rotatably mounted in the housing, where at least part of the dial extends from the second side of the housing, and where the dial includes threads; and (iv) an actuator comprising a first portion and a second portion, the second portion having threads. The actuator is slidably mounted in the housing, with the actuator threads operably engaging the dial threads such that rotation of the dial in a first direction translates the first portion of the rigid actuator into contact with the cantilever arm. In addition, the first portion of the actuator is configured to bend the cantilever arm as the actuator contacts the arm.

In yet another embodiment, the adjustable earphone includes: (i) a housing; (ii) an ear canal portion adjacent to the housing, the ear canal portion having a first shape; (iii) and an adjustment assembly operably coupled to the housing. The adjustment assembly includes: (i) a movable member movable with respect to the housing between a first position and at least a second position; (ii) an expansion assembly configured to receive the movable member; and (iii) a control member configured to move the movable member such that actuation of the control member causes the movable member to move from a first position to at least a second position. Further, the movable member is configured to cause the expansion assembly to expand in at least one direction when the movable member is moved to the second position. Subsequently, the expansion assembly is configured to force the ear canal portion to have at least a second shape when the expansion assembly is expanded.

In yet other embodiments, the adjustable earphone includes: (i) an ear canal portion having a shape, where the ear canal portion is operable for placement in a user's ear canal; and (ii) means for adjusting the shape of the ear canal portion by a user when the ear canal portion is positioned in the user's ear.

In yet other embodiments, the present invention provides an adjustable ear insert including: (i) an ear canal portion configured for insertion in a user's ear canal, the ear canal portion having a first shape; and (ii) an adjustment assembly at least partially located within the ear canal portion, where the adjustment assembly is operable to cause the ear canal portion to have at least a second shape.

In yet other embodiments, the adjustable ear insert includes: (i) an inner end having an eartip, where the inner end is configured to be placed within an ear canal of a user; (ii) and an outer end having a control feature, where the outer end is configured to remain outside the ear canal, and where the control feature is accessible by the user to expand or compact the eartip.

In these and other various embodiments, an adjustable ear insert is capable of insertion into a user's ear canal and then may be adjusted by the user to create a snug fit between the ear canal and an ear canal portion of the adjustable ear insert. In other words, the ear canal portion is capable of being adjusted to substantially seal the ear canal portion against the user's ear canal. Where the adjustable ear insert is an earphone, such a snug fit or seal provides, among other things, enhanced noise isolation from external noises other than those produced by the earphone, and sound enhancement for sound produced by the earphone. Where the adjustable ear insert is an earplug, such a snug fit or seal provides, among other things, enhanced noise isolation from external noises. Further, the in-ear adjustability of the ear canal portion provides an ear insert that should not require different sized ear canal portions for different users.

BRIEF DESCRIPTION OF THE FIGURES

The features of the various embodiments are set forth with particularity in the appended claims. The various embodiments, however, both as to organization and methods of operation, may best be understood by way of example with reference to the following description, taken in conjunction with the accompanying drawings as follows.

FIG. 1A is a perspective view of a wired adjustable earphone according to one non-limiting embodiment.

FIG. 1B is a is a perspective view of a wireless adjustable earphone according to one non-limiting embodiment

FIGS. 2A-2B are diagrams showing compact and expanded shapes of various ear canal portions of adjustable earphones according to various embodiments.

FIGS. 3A-3D are several top views of adjustable earphones using a variety of user controls and actuator mechanisms to provide an adjustable earphone according to various embodiments.

FIG. 4 is a side cross-sectional view of one non-limiting embodiment of an adjustable earphone.

FIGS. 5A-5G are several illustrations of some of the various ear canal portion shapes made possible by the adjustable earphone of FIG. 4.

FIG. 6 is an exploded view of the adjustable earphone of FIG. 4.

FIG. 7 is a side cross-sectional view of one non-limiting embodiment of an adjustable earphone.

FIGS. 8A-8G are several illustrations of some of the various ear canal portion shapes made possible by the adjustable earphone of FIG. 7.

FIG. 9 is an exploded view of the adjustable earphone of FIG. 7.

FIG. 10 is a top cross-sectional view of one non-limiting embodiment of an adjustable earphone.

FIGS. 11A-11H are several illustrations of some of the various ear canal portion shapes made possible by the adjustable earphone of FIG. 10.

FIG. 12 is an exploded view of the adjustable earphone of FIG. 10.

FIG. 13 is a top cross-sectional view of one non-limiting embodiment of an adjustable earphone.

FIGS. 14A-14C are several illustrations of some of the various ear canal portion shapes made possible by the adjustable earphone of FIG. 13.

FIG. 15 is an exploded view of the adjustable earphone of FIG. 13.

FIG. 16 is a cross-sectional view of one non-limiting embodiment of an adjustable earphone inserted and expanded in a user's ear canal.

FIGS. 17A-17B are perspective views of a non-limiting embodiment of an eartip cushion and a base housing element of an adjustable earphone.

FIG. 18A is a perspective view of an earphone assembly including a cord wrapped around an audio device.

FIG. 18B is a perspective view of a portion of an earphone assembly including a cord only partially wrapped around an audio device.

FIG. 19A is a perspective view of an adjustable earphone from the earphone assembly of FIG. 18A and 18B.

FIG. 19B is an illustration of a spring clip from the earphone assembly of FIGS. 18A and 18B.

FIG. 19C is an illustration of the spring clip of FIG. 19B being used to hold in place the wrapped cord of the earphone assembly of FIG. 18A.

FIG. 20 is a perspective view of one non-limiting embodiment of an adjustable earphone having a rotatable dial.

FIG. 21A is an exploded view of the adjustable earphone of FIG. 21A.

FIG. 21B is an exploded view of an ear canal cushion and part of a housing of the adjustable earphone of FIG. 21A.

FIG. 22 is a front view of the adjustable earphone of FIG. 21A.

FIG. 23 is a side view of the adjustable earphone of FIG. 21A.

FIG. 24 is a perspective cross-sectional view, taken along line 24-24 in FIG. 22, of the adjustable earphone of FIG. 21A.

FIG. 25 is a top cross-sectional view, taken along line 25-25 in FIG. 22, of the adjustable earphone of FIG. 21A, with an ear canal portion shown having a compact, first shape.

FIG. 26 is a top cross-sectional view, taken along line 26-26 in FIG. 22, of the adjustable earphone of FIG. 21A, with the ear canal portion shown having an expanded, second shape.

FIG. 27 is a side cross-sectional view of the adjustable earphone of FIG. 21A inserted and expanded in a user's ear canal.

FIG. 28 is a top cross-sectional view of one non-limiting embodiment of an adjustable earphone having a push button.

DETAILED DESCRIPTION

Certain exemplary embodiments will now be described to provide an overall understanding of the principles of the structure, function, manufacture, and use of the devices and methods disclosed herein. One or more examples of these embodiments are illustrated in the accompanying drawings. Those of ordinary skill in the art will understand that the devices and methods specifically described herein and illustrated in the accompanying drawings are non-limiting exemplary embodiments and that the scope of the various embodiments of the present invention is defined solely by the claims. The features illustrated or described in connection with one exemplary embodiment may be combined with the features of other embodiments. Such modifications and variations are intended to be included within the scope of the present invention.

In the following description, like reference characters designate like or corresponding parts throughout the several views. In addition, in the following description, it is to be understood that such terms as "forward," "rearward," "front," "back," "right," "left," "upwardly," "downwardly," and the like are words of convenience and are not to be construed as limiting terms. The description below is for the purpose of describing various embodiments of the invention and is not intended to limit the invention thereto.

The various embodiments described herein are directed to devices intended to be placed in an ear canal, such as an earphone assembly usable with an audio device. Referring to FIGS. 18A and 18B, an earphone assembly 5 includes a cord 10 and a pair of earphones 100. The cord 10 has a first end 11, a second end 12, and an electrical connector 13 located at the first end 11. The electrical connector 13 connects the earphone assembly 5 to an audio device 1 such that electrical signals may be conveyed through the cord 10, to each earphone 100, where the electrical signal may be converted to audible sounds by a transducer (see, e.g., FIGS. 24 and 27). As is known in the field, a transducer is a device, usually electrical, electronic, electro-mechanical, electromagnetic, photonic, or photovoltaic, that converts one type of energy or physical attribute to another for various purposes, including producing audible sounds. The term transducer may be used to refer to an audio loudspeaker,

which converts electrical voltage variations representing music or speech, to mechanical cone vibration, and hence vibrates air molecules creating sound.

Each earphone 100 is located at the second end 12 of the cord. The cord 10 further includes a first portion 16 adjacent to the first end 11 of the cord 10 and a second portion 17 adjacent to the second end 12 of the cord 10. The first portion 16 includes a single strand and the second portion 17 includes two strands such that the two earphones 100 may be placed in the ears of a user, with one strand of the second portion 17 on each side of the users head.

As shown in FIGS. 1A and 1B, a wired (FIG. 1A) or wireless (FIG. 1B) earbud style earphone (100, 50 respectively) according to an aspect of the present disclosure includes an eartip cushion 121 that may be inserted in a user's ear canal in a compact configuration, or first shape 122, and, once in the ear canal, expanded to an expanded configuration, or second shape 123 (see FIG. 26), to fit snugly against all sides of the ear canal (see, e.g., FIG. 27). The resulting customized fit provides improved audio isolation by blocking external sounds from reaching the user's eardrum, as well as improved comfort by allowing the user to determine the amount of pressure exerted by the eartip, or ear canal portion 120, on the interior of the ear canal. Further, forming a near airtight seal between the ear canal portion 120 and the user's ear canal should not only reduce the outside ambient noise that reaches the user's eardrum, but should also provide a sound transducer (see FIGS. 24 and 27) of the earphone 120 with a 1:1 acoustic coupling with the user's eardrum, thus enhancing the audible sound perceived by the user. The eartip cushion 121 may be fabricated from a foam material. While the earphone of FIGS. 1A or 1B will typically be returned to its compact configuration, or first shape 122, prior to removal from the user's ears, the compressible material of the eartip, or ear canal portion 120, may allow the earbud to be removed while still in its expanded configuration.

Still referring to FIGS. 1A and 1B, expansion of the eartip may be achieved by twisting or pressing on a control 180 on an exterior surface of the earbud. Where expansion is achieved by twisting a control 180 about longitudinal axis L in the direction of arrow A and/or B, a manufacturer's logo

189 displayed on the control 180 may be attached to the control by a mechanism (described below) that allows the logo 189 to remain substantially upright and readable regardless of the rotation of the control 180.

In various embodiments, referring now to FIGS. 20-27, an adjustable earphone, such as adjustable earphone 100, for example, can comprise a housing 110, an ear canal portion 120, and an adjustment assembly 130. The housing may have a first side 111 and a second side 112 (see FIG. 21A and 24). Adjacent to and attached to the first side 111 of the housing is the ear canal portion 120. Ear canal portion 120 generally defines longitudinal axis L (see FIG. 20) and is operable for placement in a user's ear canal (see, e.g., FIG. 27). Ear canal portion 120 is shown in FIG. 20 having a shape that includes a compact, first shape 122 to facilitate initial placement of the ear canal portion 120 in the user's ear canal and may include a cushion 121 (see FIGS. 21A and 21B). Cushion 121 generally has an opening 125 that, as is described in more detail below, may receive part of an expansion assembly 160. Further, cushion 121 includes a housing groove 127 (FIG. 24) designed to receive or snap on a protruding ring 118 of the housing 110 such that cushion 121 may attach releasably to the housing 110. Cushion 121 may be stretchable and made of a resilient, compressible material. The resilient material may include a foam, a memory foam, a closed-cell foam, an open-cell foam, an elastomer, an elastomeric foam, silicone, and/or rubber. The ear canal portion 120, including cushion 121, may be capable of being adjusted to have an expanded, second shape 123 (see FIG. 26). Further, ear canal portion 120, including cushion 121, may also be capable of being adjusted to have intermediate shapes, or at least a third shape (not shown). In other words, the shape of the ear canal portion 120 may be changed to have any number of shapes, including a continuum of shapes between the first shape 122 and the second shape 123. The purpose of adjusting the shape of the ear canal portion 120 is to allow a user to change the shape of the ear canal portion 120, after insertion in the user's ear canal, to have a snug fit between the ear canal and a substantial part of the ear canal portion 120. Such a snug fit provides noise isolation (from external noises other than those produced by the earphone 100) and sound enhancement (for sound

produced by the earphone 100), among other things. Further, the in-ear adjustability of the ear canal portion 120 provides an earphone 100 that should not require different sized ear canal portions 120 or cushions 121 for different users; in other words, the adjustable earphone 100 may provide a one-size-fits-all device owing to the customized fit offered by the adjustability of the ear canal portion.

In various embodiments, referring again to FIGS. 20-27, the adjustable earphone 100 may include means for adjusting the shape of the ear canal portion 120 by a user when the ear canal portion 120 is positioned in the user's ear canal. Means for adjusting the shape of the ear canal portion 120 may be provided in at least one embodiment by adjustment assembly 130. Adjustment assembly 130 may be operably coupled to the housing 110 and/or to the ear canal portion 120 such that actuation of the adjustment assembly 130 causes the ear canal portion 120 to have at least a second shape 123.

Generally, according to various non-limiting embodiments, the adjustment assembly 130 may include a movable member 140, an expansion assembly 160, and a control member 180. The movable member 140 may be movable with respect to the housing 110 between a first position (see FIG. 25) and at least a second position (see FIG. 26). The expansion assembly 160 may be configured to receive the movable member 140, and the control member 180 may be configured to move the movable member 140 with respect to the housing 110. Actuation of the control member 180 may cause the movable member 140 to move from the first position (see FIG. 25) to the second position (see FIG. 26). The movable member may be configured to cause the expansion assembly 160 to expand in at least one direction when the movable member is moved to the second position (FIG. 26). Relatedly, the expansion assembly may be configured to force the ear canal portion 120 to have at least a second shape 123 when the expansion assembly 160 is expanded. Conversely, the expansion assembly 160 may be configured to retract in at least one direction when the movable member is moved to the first position (FIG. 25), thus resulting in the ear canal portion returning to the first shape 122 when the expansion assembly 160 is retracted.

In more detail, according to at least one non-limiting embodiment, the movable member 140 may include a first portion 150 and a second portion 142 that together serve as an actuator (see FIGS. 21A and 24), as explained in more detail below. Generally, the movable member moves along longitudinal axis L (see FIG. 20) and is designed to move relative to the housing such that the first portion 150 of the movable member 140 may engage the expandable member 160 when moved accordingly. Such relative movement is caused by force exerted on the movable member by a user adjusting control member 180, as described below. This force may be provided by any number of mechanical mechanisms; here the movable member 140 receives a moving force from a threaded engagement between the control member 180 and the second portion 142 of the movable member 140 at threads 143 (see FIGS. 21A and 25). Threads 143 of the movable member 140 are designed to remain rotationally stationary relative to the housing 110 such that rotation of the control member 180 forces the movable member to translate with respect to the housing 110. This rotational stability is provided by guide protrusions 146 (FIG. 21A) on the second portion 142 of the movable member 140. Guide protrusions 146 are received slideably in guide recesses 114 (FIG. 21B) of the first side 111 of the housing 110 such that the second portion 142 of the movable member 140 may translate but will not substantially rotate with respect to the housing 110 owing to the interface between the protrusions 146 and the recesses 114.

Further, referring to FIGS. 21A, 24, 25 and 27, the second portion 142 may include a cavity 141 that is configured to support a transducer 190, part of the cord 10 electrically coupled to the transducer 190 (see FIG. 27), and the first portion 150 of the movable member 140. The second portion 142 may also include a slot 149 for passing the cord 10 into the cavity 141. Additionally, the second portion 142 may include locking grooves 147 and transducer supports 148. The first portion 150 of the movable member 140 may include locking protrusions 152 that are designed to be inserted and twisted into the locking grooves 147 of the second portion 142 such that transducer 190 is held in place, or sandwiched, between the first portion 150 and the second portion 142 of the movable member. Friction between the first portion 150, the transducer

190, and the supports 148 of the second portion 142 may provide sufficient force to prevent the protrusions 152 of the first portion 150 from freely decoupling from the locking grooves 147 of the second portion 142. Accordingly, the movably member 140, including the first and second portions 150, 142, is designed to move as a single rigid body relative to housing 110. Thus, while shown in at least one embodiment as two separable components, first and second portions 150, 142 could also be one unitary and integral component.

The first portion 150 of the movable member 140 is designed, in at least one non-limiting embodiment, to actuate expansion assembly 160 as the first portion 150 is moved from a first position (FIG. 25) to at least a second position (FIG. 26). The first portion 150 thus includes an actuating surface 155 (see, e.g. FIG. 24) that may be shaped and positioned such that the actuating surface 155 engages operably the expansion assembly 160, as explained in more detail below. The first portion 150 of the movable member 140 also may include a sound passageway 151 (FIG. 21A) oriented along longitudinal axis L. Sound passageway 151 provides a channel along which sound produced by the transducer 190 may travel freely toward an inner end 101 (FIG. 20) of the earphone 100 and into opening 125 (FIGS. 21A-26) of the cushion 121. Also, the first portion 150 includes an O-ring groove 153 (FIG. 21A) configured to hold an elastic O-ring 154. O-ring 154 seals the movable member against the first side 111 of the housing 110 and/or against the expansion assembly 160 (see FIGS. 25-26). Accordingly, audible sound waves produced by the transducer 190 only are allowed to travel toward the inner end 101 of the earphone 100, and, subsequently, a user's ear drum, via sound passageway 151 of the movable member 140.

According at least one non-limiting embodiment, referring now to FIGS. 21A-21B and 25-26, the expansion assembly 160 is designed to expand in at least one direction when actuated by the movable member 140. The expansion assembly 160 may be designed to expand in a direction substantially transverse to the longitudinal axis L (see FIG. 20). Here, this is accomplished by using a set of cantilever arms 161. The cantilever arms 161 protrude from the first side

111 of the housing and, when the resilient cushion 121 is attached to the housing, are at least partially located within the opening 125 of the cushion 121. Arm recesses 126 (FIG. 21B) formed in the cushion 121 receive the cantilever arms 161 such that the cushion 121 does not rotate freely thereon. The cantilever arms 161 are uniformly spaced around longitudinal axis L to form an opening 164 configured to receive the first portion 150 of the movable member. Cantilever arms 161 each include an inner surface 163 and an outer surface 162. Inner surface 163 is curved at least partially toward longitudinal axis L so that at least part of the inner surface 163 will make contact with the movable member's actuating surface 155 when the movable member 140 is advanced toward the inner end 101 of the earphone 100. The actuating surface 155 of the movable member 140 is curved correspondingly to meet the inner surface 163 of each cantilever arm 161. As the movable member 140 is moved toward the inner end 101 of the earphone 100, the actuating surface 155 of the first portion 150 of the movable member 140 makes contact with one or more of the cantilever arms 161 at inner surface 163. Further movement of the movable member 140 in the same direction pushes on the inner surface 163, thus forcing the cantilever arm 161 to bend away from longitudinal axis L (see FIG. 26). Because the cantilever arms 161 are received insertably in the opening 125 of the resilient cushion 121, the cantilever arm is bent into the cushion 121 as the movable member 140 contacts and pushes the cantilever arm 161. Consequently, as the cantilever arm is continually bent away from longitudinal axis L, the cushion 121 is forced to have an expanded, second shape 123 (see FIG. 26). Thus, the ear canal portion 120 may be expanded after insertion in a user's ear canal, substantially sealing the cushion 121 against the user's ear canal to form a snug fit.

Note that, while a plurality of cantilever arms 161 are described above as providing the expansion assembly 160 with the ability to expand, it is contemplated that any number of cantilever arms, including one, could perform the same or similar function.

According at least one non-limiting embodiment, the control member 180 is designed to actuate the movable member 140 such that the movable member

140 moves to cause expansion assembly 160 to expand in at least one direction. Control member 180 accomplishes this in any number of forms. For instance, but without limitation, control member 180 could be in the form of a push button, rotatable dial, or squeezable member. In FIGS. 20-27, for example, control member 180 is a dial 182 rotatably mounted in the housing 110. Dial 182 rotates, but does not translate with respect to housing 110. Dial 182 moves in such a fashion because it includes a protruding ring 184 (FIGS. 21A and 25) along its perimeter that slideably engages a groove 117 of the housing 110. Groove 117 is formed between a lip 113 of the second side 112, the first side 111, and cord guide 115 of housing 110 (see FIG. 25). Thus, dial 182 is rotatable about longitudinal axis L. Further, at least part of the dial may extend from the second side 112 of the housing 110 such that it is accessible to a user while ear canal portion 120 is inserted in the user's ear canal (see. FIG 27). Grips 185 (FIG. 21A) or another textured surface of the dial 182 may provide an enhanced user interface as the user rotates the dial with his or her fingers.

Referring to FIGS. 21A and 25, dial 182 may include a cavity 181 for insertably receiving the second portion 142 of the movable member. Further, the dial may have threads 183 formed in the inside of the dial, facing cavity 181. The threads 183 are configured to operably engage the threads 143 formed on the surface of the second portion 142 of the movable member 140. Thus, rotation of the dial 182 rotates dial threads 183, resulting in a translational force being applied to the movable member 140 via movable member threads 143. The translational force causes the movable member to move either forward, toward the inner end 101 of the earphone 100, or backward, toward an outer end 102, depending on the direction dial 182 is being rotated. Thus, the actuator or movable member threads 143 operably engage the dial threads 183 such that rotation of the dial 182 in a first direction translates the rigid actuator into contact or additional contact with each cantilever arm 161 (see FIGS. 25-26).

Focusing now on the other elements of earphone 100, the housing 110 may be adapted to receive a number of components, including a transducer

190. Also, cord 10 (FIGS. 18B and 27) is received in the housing 110 through cord passageway 116 of cord guide 115 (see FIG. 24). Cord guide 115 may also include a marking 119 to indicate in which ear, for example right ("R," as seen in FIG. 21A) or left ("L," not shown), a user should place the earphone 100. Cord 10 provides an electrical conduit between the electrical connector 13 and the transducer 190; part of the cord 10 may be electrically coupled to the transducer 190, for instance, an interior wire of cord 10 may be soldered to the transducer 190 (see FIG. 27). Transducer 190 is capable of producing audible signals, or sound, in response to electrical signals received by the transducer 190 from the electrical connector 13 via cord 10. To prevent undesired stress from being transferred to the transducer, the cord 10 may be tied to form a knot (FIG. 27) at the cord's second end 12 (FIG. 18B). This knot is received within the cavity 141 of the second portion 142 of the movable member 140 and is sized such that it is larger than the width of slot 149 (FIG. 24). Therefore, if a user pulls on cord 10, the knot is forced against the second portion 142 at slot 149 and the knot absorbs the stress created by such pulling, thereby shielding the transducer from unnecessary stress and/or strain.

Further, the second portion 142 of the movable member 140 may have a manufacturer's logo piece189 positioned near the outer end 102 of the earphone 100 (see FIGS. 1A, 20, 21A and 25). Logo piece 189 is press fit to the second portion 142 such that it is visible through dial 182 at the outer end 102. The logo piece182 is kept in a desired position, for example, approximately horizontal, when the cord 10 is hanging in a downward direction from a user's ear, for example similar to the orientation shown in FIG. 27. The logo piece 189 is kept in such a position because the logo piece 189 is secured to the non-rotating movable member 140 at second portion 142. While the logo 189 may translate with the movable member 140, it will not rotate with dial 182; therefore, it is prevented from rotating such that an observer easily may read the manufacturer's logo regardless of the rotation of dial 182.

The foregoing has focused on at least one embodiment for adjusting the shape of an eartip, or an ear canal portion, of an earphone while inserted in a user's ear canal. However, various embodiments are possible to accomplish

the same or similar goal. As illustrated in FIGS. 2A-2E, expansion of the eartip 220 may be achieved in several ways. In a first embodiment (see FIG. 2A), where the eartip 220 is in a compact configuration 222 when unmodified, inner and outer sides 227, 228 of the eartip may be brought together to compress the material of the eartip 220, causing it to expand into an expanded configuration 223. In a second embodiment (see FIG. 2B), where the eartip 320 is in an expanded configuration 323 while unmodified, inner and outer sides 327, 328 of the eartip 320 may be pulled apart from each other to stretch the material of the eartip, causing it to change into a compact configuration 322. In a third embodiment (see FIG. 2C), where the eartip 420 is in a compact configuration 422 when unmodified, an outer portion 428 of the eartip may be squeezed, displacing eartip material into remaining portions of the eartip 420, causing the remaining portions to expand into an expanded configuration 423. In a fourth embodiment (see FIG. 2D), where the eartip is in a compact configuration 522 when unmodified, one or more elements of the earbud that are located inside the eartip (for example, a cantilever arm or arms 161, as described above and seen in FIGS. 21A-21B and 24-27) may push outwards on the eartip, causing it to expand into an expanded configuration 523. In a fifth embodiment (see FIG. 2E), where the eartip 620 is in an expanded configuration 623 when unmodified, one or more elements of the earbud that are located inside the eartip 620 may pull inwards on the eartip 620, causing it to change into a compact configuration 622.

As illustrated in FIGS. 3A-3D, a variety of user controls and actuator mechanisms may be utilized to provide an earbud, or earphone, according to various non-limiting aspects of the present disclosure. For example, referring to FIG. 3A, an earphone 1400 may include an adjustment assembly 1430 that may include a control member 1480 in the form of a pressable button. The control member 1480 may also be operable with finger grips 1417 protruding from a housing 1410 of the earphone 1400 such that a user may grip the finger grips 1417 and press the button, or control member 1480, without forcing the earphone 1400 excessively into an ear canal of the user. Depressing the button, or control member 1480, may cause an ear canal portion 1420

extending from a housing 1410 to transition from a first shape 1422 to a second shape 1423. Alternatively, referring now to FIG. 3D, an earphone 1600 may include an adjustment assembly 1630 that may include a control member 1680 also in the form of a pressable button. However, in the earphone 1600 of FIG. 3D, the finger grips shown in FIG. 3A are omitted. Depressing the button, or control member 1680, may cause an ear canal portion 1620 extending from a housing 1610 to transition from a first shape 1622 to a second shape 1623.

In more detail, an earphone 1700 with a pressable button as control member 1780 is shown in FIG. 28. The control member 1780 is part of an adjustment assembly 1730 that includes a movable member 1740 and an expansion assembly 1760. Earphone 1700 is similar to earphone 1400 described above in that it also has finger grips 1717 protruding from a housing 1710 such that a user may grip the ginger grips and press the button, or control member 1780, without forcing the earphone 1700 and ear canal portion 1720 excessively into an ear canal of the user. Depressing the button, or control member 1780 causes a movable member 1740 to move and actuate expansion assembly 1760. Thus, depressing the button, or control member 1780, may cause an ear canal portion 1720 extending from a housing 1710 to transition from a first shape 1722 to a second shape 1723. Movable member 1740, expansion assembly 1760, and ear canal portion 1720 are similar to movable member 140 and expansion assembly 160 described above and seen in FIGS. 25-26, for example. The control member 1780 includes a protract-retract assembly 1783 operable to hold the movable member 1740 in the first position shown in FIG. 28 before the button, or control member 1780, is initially pressed and, after pressing the button, operable to hold the movable member in a second position (not shown) correlating with expansion of the expansion assembly 1760 and transition of the first shape 1722 to a second shape 1723. Protract-retract assembly 1783 may be similar to that used with a traditional retractable ballpoint pen including a spring and cam arrangement and is described, for example, in U.S. Patent No. 3,819,282 to Schultz titled RETRACTABLE PEN, hereby incorporated by reference in its entirety.

Further, referring now to FIG. 3B, and as discussed above, an earphone 100 may include an adjustment assembly 130 including a control member 180 in the form of a rotatable dial. Rotating the dial, or control member 180, may cause an ear canal portion 120 extending from a housing 110 to transition from a first shape 122 to a second shape 123.

Another non-limiting example of a user control and actuator mechanism is provided by reference to FIG. 3C. An earphone 1500 may include an adjustment assembly 1530 including a squeezeable control member 1580 operable to rotate a movable member 1540 such that an expansion assembly 1560 presses outward on an ear canal portion 1520 extending from a housing. Squeezing the control member 1580 causes the ear canal portion 1520 to transition from a first shape 1522 to a second shape 1523.

In any event, according to various non-limiting embodiments of an adjustable earphone, a user control, or control member, is capable of being manipulated by a user while an eartip, or ear canal portion, of the earphone is positioned in the user's ear canal. In response to such manipulation of the control member, the ear canal portion is designed to change shape such that the ear canal portion fits snugly against the ear canal.

Unless otherwise indicated herein, an earbud, or earphone, according to an aspect of the present disclosure has an inner end with an eartip, or ear canal portion, that is placed within the ear canal of a user and an outer end with a control feature, or control member, that remains outside the ear canal and may be accessed by the user to expand or compact the eartip, or ear canal portion.

In various embodiments, referring to FIGS. 4-6, an adjustable earphone 800 may include another means for adjusting the shape of an ear canal portion 820 having a first shape 822 (FIGS. 4, 5C, and 5E) by a user when the ear canal portion 820 is positioned in the user's ear canal. Means for adjusting the shape of the ear canal portion 820 may be provided in at least one embodiment by adjustment assembly 830. Adjustment assembly 830 may be operably coupled to housing 810 and/or to the ear canal portion 820 such that actuation of the adjustment assembly 830 causes the ear canal portion 820 to have a

second shape 823 (FIGS. 5D and 5G) and may also cause ear canal portion 820 to have at least an intermediate, third shape 824 (FIG. 5F).

As seen at least in FIGS. 4 and/or 6, adjustment assembly 830 may include a movable member 840, an expansion assembly 860, and a control member 880. The control member 880 may include a rotatable adjustment dial 882. Further, the ear canal portion 820 may include a cushion 821. Positioned at least partially within the housing 810 are a transducer 890 and a manufacturer logo piece 889. A cord is coupled to the transducer 890 (see FIG. 4) such that electrical signals can be passed to the transducer 890 to create audible sound therefrom.

Thus, FIGS. 4-6 depict an earphone or earbud 800, according to an aspect of the present disclosure, where rotation of an adjustment dial 882 having an internal thread 883 and located at an outer end 802 of the earbud 800 pulls a movable member, or actuator 840, coupled to an ear canal portion, or eartip 820, at an inner end 801 of the earbud 800, with the result that the eartip 820 is compressed along an axis L running from the outer end 802 to the inner end 801 of the earbud 800, causing it to expand radially away from the axis L.

In various embodiments, referring to FIGS. 7-9, an adjustable earphone 900 may include another means for adjusting the shape of an ear canal portion 920 having a first shape 922 (FIGS. 7 and 8A), 922a (FIG. 8D), or 922b (FIG. 8F) by a user when the ear canal portion 920 is positioned in the user's ear canal. Means for adjusting the shape of the ear canal portion 920 may be provided in at least one embodiment by adjustment assembly 930. Adjustment assembly 930 may be operably coupled to housing 910 and/or to the ear canal portion 920 such that actuation of the adjustment assembly 930 causes the ear canal portion 920 to have a second shape 923, (FIG. 8A), 923a (FIG. 8E), or 923b (FIG. 8G). The first and second shapes shown in FIGS. 7-8G (922, 922a, and 922b, and 923, 923a, and 923b) are dependent on the relative size, shape, and placement of the various components of the earphone 900 including, but not limited to, the expansion assembly 960, the movable member 940, and the ear canal portion 920.

As seen at least in FIGS. 7 and/or 9, adjustment assembly 930 may include a movable member 940, a expansion assembly 960, and a control member 980. The control member 980 may include a rotatable adjustment dial 982. Further, the ear canal portion 920 may include a cushion 921. Positioned at least partially within the housing 910 are a transducer 990 and a manufacturer logo piece 989. A cord is coupled to the transducer 990 (see FIG. 7) such that electrical signals can be passed to the transducer 990 to create audible sound therefrom.

Thus, FIGS. 7-9 illustrate another earbud 900, according to an aspect of the present disclosure, where rotation of an adjustment dial 982 having an internal thread 983 and located at an outer end 901 of the earbud 900 pulls a movable member, or first element 940, of an adjustment assembly, or actuator assembly 930, toward the outer end 902 of the earbud 900. The first element 940 is tapered along its length, having a narrower portion 956 and a wider portion 955. An expansion assembly, or second element 960, of the actuator assembly 930 is positioned between the first element 940 and the eartip 920. The second element 960 is similar to the expansion assembly 160 including cantilever arms 161 described above (see, e.g., FIGS. 21A-21B and 24-26). The second element 960 has a plurality of portions 961 extending from an outer end to an inner end of the second element 960. In a compact configuration, inner surfaces 963 of the plurality of portions 961 of the second element 960 are in contact with the narrower portion 956 of the first element 940. As the first element 940 moves toward the outer end 902 of the earbud 900, the wider portion 955 of the first element 940 is pulled into contact with the inner surfaces 963 of the plurality of portions 961 of the second element 960, causing the plurality of portions 961 of the second element 960 to push outward and expand the eartip 920.

In various embodiments, referring to FIGS. 10-12, an adjustable earphone 1000 may include another means for adjusting the shape of the ear canal portion 1020 having a first shape 1022 (FIGS. 10, 11A-11B, and 11E) by a user when the ear canal portion is positioned in the user's ear canal. Means for adjusting the shape of the ear canal portion may be provided in at least one

embodiment by adjustment assembly 1030. Adjustment assembly 1030 may be operably coupled to housing 1010 and/or to the ear canal portion 1020 such that actuation of the adjustment assembly 1030 causes the ear canal portion 1020 to have at least a second shape 1023 (FIGS. 11A-11B and 11F).

As seen at least in FIGS. 10 and/or 12, adjustment assembly 1030 may include a movable member 1040, a expansion assembly 1060, and a control member 1080 that are formed as one unitary and integral component. Further, the ear canal portion 1020 may include a cushion 1021. Positioned at least partially within the housing 1010 are a transducer 1090 and a manufacturer logo piece 1089. A cord (not shown) is coupled to the transducer 1090 such that electrical signals can be passed to the transducer 1090 to create audible sound therefrom.

Thus, FIGS. 10-12 show yet another earbud 1000 according to an aspect of the present disclosure, having an ear canal portion, or eartip 1020, with an interior having a plurality of radially inward-extending lobes 1026 and a moveable member, or actuator 1040, with corresponding radially outward-extending lobes 1055 that form at least part of expansion assembly 1060. An outer end of the actuator 1040 forms a control member 1080 that may be rotated by a user. In a compact configuration, the lobes 1055 of the actuator 1040 are located in gaps 1028 between the lobes 1026 of the eartip 1020. When the user rotates the actuator 1040 via control member 1080, the outward-extending lobes 1055 of the actuator 1040 press against the inward-extending lobes 1026 of the eartip, pushing outward on the inner surface of the eartip 1020 and causing the eartip 1020 to expand. The number of outward extending lobes of the actuator and/or expansion assembly may vary, for example, four lobes 1055 of expansion assembly 1060 are shown at least in FIG. 11C, whereas two lobes 1055a or an expansion assembly 1060a are shown at least in FIG. 11D. The cushion of eartip 1020 is correspondingly formed for the number of respective expansion assembly lobes, for instance cushion 1021 (FIG. 11C) and cushion 1021a (FIG. 11D) may be formed for expansion assembly 1060 and expansion assembly 1060a, respectively. The first and second shapes of the eartip 1020 shown in FIGS. 10 and 11A-11H are

dependent on the size, shape, and placement of the various components of the earphone 1000. Adjusting the number of lobes, as explained above, can also provide different first and second shapes (1022 and 1022a, and 1023 and 1023a, respectively) of the ear canal portion 1020.

In various embodiments, referring to FIGS. 13-15, an adjustable earphone 1100 may include another means for adjusting the shape of an ear canal portion 1120 having a first shape 1122 (FIG. 14A) by a user when the ear canal portion 1120 is positioned in the user's ear canal. Means for adjusting the shape of the ear canal portion 1120 may be provided in at least one embodiment by adjustment assembly 1130. Adjustment assembly 1130 may be coupled operably to the housing 1110 and/or to the ear canal portion 1120 such that actuation of the adjustment assembly 1130 causes the ear canal portion 1120 to have a second shape 1123 (FIG. 14A).

As seen at least in FIGS. 13 and/or 15, adjustment assembly 1130 may include fixed element 1140, expansion assembly 1160, and control member 1180. Further, the ear canal portion 1120 may include a cushion 1121. Positioned at least partially within the housing 1110 are a transducer 1190 and a manufacturer logo piece 1189. A cord (not shown) is coupled to the transducer 1190 such that electrical signals can be passed to the transducer 1190 to create audible sound therefrom.

Thus, FIGS. 13-15 depict another earbud 100 according to an aspect of the present disclosure. An adjustment assembly, or actuator assembly 1130, within an eartip 1120 includes an expansion assembly, coiled element 1160, wrapped around an external surface of a fixed element 1140 and attached to the fixed element 1140 at an inner end. A rotating control member 1180 is attached to an outer end of the coiled element 1160. In a compact configuration (see FIG 14B), the coiled element 1160 lies adjacent to the fixed element 1140 and rotation in a first direction is not possible, because it would cause the coiled element 1160 to wrap more tightly against the fixed element. Rotation in the opposite direction, however, results in an expansion of the diameter of the coiled element 1160, causing the eartip 1120 to expand (see FIG. 14C).

FIG. 16 shows an exemplary earbud 1200 according to an aspect of the present disclosure that is adjusted by pressing, rather than rotating, a control 1280. An adjustment, or actuator assembly 1230, has a plurality of stiff fingers 1261 extending from an outer end 1202 to an inner end 1201 within an eartip 1220 and coupled to a button 1282 at an outer end 1202 of the earbud. The fingers 1261 form a profile 1262 with a portion having a narrower radius tapering to a portion having a wider radius. The earbud 1200 also includes a ring 1240 around the fingers 1261, the ring 1240 positioned at a fixed distance inward from the outer end 1202 of the earbud 1200. As the button 1282 is pushed inward or pulled outward, the tapered profile 1262 of the fingers 1261 slides within the ring 1240, the outer end of the fingers 1261 expand or contract radially, and the eartip 1220 expands or contracts.

The earbud 1200 of FIG. 16 and other earbuds or earphones according to aspects of the present disclosure not only cause the outer surface of an eartip to expand, but also cause the inner cavity of the eartip to expand. The expanded cavity provides a larger volume for sound from the earphone to resonate and generates better low frequency response from the earphone.

In FIG. 17 a snap ring 1327 is shown that operates to attach an eartip element 1321 to a base element 1311 of an earbud 1300. The snap ring 1327 is located in a first end of the eartip element 1321. The base element 1311 of the earbud 1300 includes a tapering portion with a groove 1318 around the tapering portion that corresponds in size to the snap ring 1327. As the first end of the eartip 1320 is pressed onto the base element, the snap ring 1327 expands elastically around the tapering portion of the base element 1311 until reaching the groove 1318, whereupon it contracts back toward its original diameter. The elastic force of the snap ring 1327 attempting to return to its original diameter holds the snap ring 1327 in the groove 1318 and acts to prevent the eartip 1320 from slipping off the earbud 1300 and sealing the eartip 1320 to the base element 1311. Eartip element 1321 and base element 1311 may form part of a housing of an earphone, such as first side 111 of housing 110 of adjustable earphone 100 described above and seen in FIG. 21A.

FIGS. 18A and 18B also depict a cord 11 according to another aspect of the present disclosure that may be used with earphones, such as the earbuds described above or with other types of earphones. The cord is covered with cloth, foam, or another soft material. The cord has an electrical connector 13 at a first end 11 and one or more earphones 100 at a second end 12. The connector 13 at the first end 11 may be coupled to an audio device 1. When the audio device 1 is not in use, the cord may be wrapped around the audio device 1 and form a cushion (FIG. 18A), protecting the audio device 1 from damage when placed loose in a briefcase, backpack, or other carrier. The earphones 100 at the second end of the cord may be tucked under another section of the cord to prevent the cord from unwrapping from around the audio device 1.

FIGS. 18A, 18B, 19B, and 19C illustrate a cord clip 15 according to another aspect of the present disclosure. An earphone cord 11 may include a first portion 16 adjacent to a first end 11 of the cord 11 where the cord 11 is configured as a single strand. Between the first portion 16 of the cord 11 and a pair of earphones 100 at a second end 12 of the cord, is a second portion 17 of the cord 11, which is configured as two strands that lie along opposite sides of the head when the earphones are inserted into the ears. The two strands of the second portion 17 may pass through two corresponding apertures in a cord clip 15, as shown in FIGS. 18A, 18B, 19B and 19C. When the earphones 100 are in use, the cord clip 15 may be slid toward the first portion 16 of the cord 11, allowing the earphones to be separated and placed in the ears of the user. When the earphones 100 are not in use, the cord clip 15 may be slid toward the second end 12 of the cord 11, to hold the earphones 100 together and make the cord 11 easier to handle than it would be if the earphones 100 were left separated. The cord clip 15 further includes a spring clip 14 that may be used when the cord is wrapped around an audio device 1 to clip the second end 12 of the cord 11 to a portion of the cord closer to the first end 11 of the cord and help to prevent the cord 11 from unwrapping from around the audio device 1.

Although various embodiments have been described herein, many modifications and variations to those embodiments may be implemented. For

example, the adjustable earphone may be converted to an adjustable earplug or other adjustable ear insert. Conversion of the above described earphone into an adjustable earplug may be accomplished, for example, by removing the electrical components and removing the passageways for sound to travel, thereby providing an earplug with an adjustable shape when placed in an ear canal of a user. Further, while the general components of the adjustable earphone described above may be made of plastic (except at least parts of the cord, the eartip cushion, and the transducer), metal or other materials may be used where desirable. The foregoing description and following claims are intended to convey and cover all such modification and variations.

Any patent, publication, or other disclosure material, in whole or in part, that is said to be incorporated by reference herein is incorporated herein only to the extent that the incorporated material does not conflict with existing definitions, statements, or other disclosure material set forth in this disclosure. As such, and to the extent necessary, the disclosure as explicitly set forth herein supersedes any conflicting material incorporated herein by reference. Any material, or portion thereof, that is said to be incorporated by reference herein, but which conflicts with existing definitions, statements, or other disclosure material set forth herein will only be incorporated to the extent that no conflict arises between that incorporated material and the existing disclosure material.

CLAIMS

What is claimed is:

1. An adjustable earphone, comprising:

a housing having a first side and a second side;

a resilient cushion attached to the first side of the housing, the resilient cushion having a compact shape and an opening;

at least one cantilever arm protruding from the first side of the housing, wherein at least part of the cantilever arm is located within the opening of the resilient cushion;

a dial rotatably mounted in the housing, wherein at least part of the dial extends from the second side of the housing, wherein the dial includes threads; and

an actuator comprising a first portion and a second portion, the second portion having threads, wherein the actuator is slidably mounted in the housing, wherein the actuator threads operably engage the dial threads such that rotation of the dial in a first direction translates the first portion of the rigid actuator into contact with the cantilever arm;

wherein the first portion of the actuator is configured to bend the cantilever arm into the resilient cushion as the actuator contacts the arm, wherein the cantilever arm is configured to force the resilient cushion to have an expanded shape as the cantilever arm bends into the cushion.

2. An adjustable earphone, comprising:

a housing having a first side and a second side, wherein the first side of the housing is configured to attach to a cushion;

at least one cantilever arm protruding from the first side of the housing, wherein at least part of the cantilever arm is configured to be located within an opening of the cushion when the cushion is attached to the housing;

a dial rotatably mounted in the housing, wherein at least part of the dial extends from the second side of the housing, wherein the dial includes threads; and

an actuator comprising a first portion and a second portion, the second portion having threads, wherein the actuator is slidably mounted in the housing, wherein the actuator threads operably engage the dial threads such that rotation of the dial in a first direction translates the first portion of the rigid actuator into contact with the cantilever arm;

wherein the first portion of the actuator is configured to bend the cantilever arm as the actuator contacts the arm.

3. An adjustable earphone, comprising:

a housing;

an ear canal portion adjacent to the housing, the ear canal portion having a first shape; and

an adjustment assembly operably coupled to the housing, wherein the adjustment assembly comprises:

a movable member movable with respect to the housing between a first position and at least a second position;

an expansion assembly configured to receive the movable member; and

a control member configured to move the movable member such that actuation of the control member causes the movable member to move from a first position to at least a second position;

wherein the movable member is configured to cause the expansion assembly to expand in at least one direction when the movable member is moved to the second position, wherein the expansion assembly is configured to force the ear canal portion to have at least a second shape when the expansion assembly is expanded.

4. The adjustable earphone of claim 3, wherein the expansion assembly is configured to retract in at least one direction when the movable member is moved to the first position, wherein the ear canal portion is configured to have the first shape when the expansion assembly is retracted.

5. The adjustable earphone of claim 3, wherein the ear canal portion comprises a resilient material.

6. The adjustable earphone of claim 3, wherein the control member comprises a rotatable dial.

7. The adjustable earphone of claim 3, wherein the control member comprises a pressable button.

8. The adjustable earphone of claim 3, wherein the control member comprises a squeezable member.

9. An adjustable earphone, comprising:

a housing;

an ear canal portion adjacent to the housing, the ear canal portion having a first shape; and

an adjustment assembly operably coupled to the housing such that actuation of the adjustment assembly causes the ear canal portion to have at least a second shape.

10. The adjustable earphone of claim 9, wherein the adjustment assembly comprises a control member accessible to a user and an expansion assembly operably coupled to the control member, wherein the control member is configured to actuate the expansion assembly such that the ear canal portion has at least a second shape when the expansion assembly is actuated

11. The adjustable earphone of claim 10, further comprising an inner end and an outer end, wherein the ear canal portion is adjacent to the inner end and the control member is adjacent to the outer end, wherein the expansion assembly comprises an actuator coupled to the ear canal portion near the inner end.

12. The adjustable earphone of claim 10, wherein the expansion assembly comprises at least one bendable arm.

13. The adjustable earphone of claim 10, wherein the expansion assembly comprises a rotatable actuator having lobes.

14. The adjustable earphone of claim 10, wherein the expansion assembly comprises a coiled element.

15. The adjustable earphone of claim 9, wherein the adjustment assembly is operably coupled to the housing such that actuation of the adjustment assembly causes the ear canal portion to have at least a third shape.

16. The adjustable earphone of claim 9, further comprising a cord having a first end, a second end, and an electrical connector located at the first end, wherein the housing is located at the second end of the cord, wherein the cord is at least partially covered with a soft material.

17. The adjustable earphone of claim 16, wherein the soft material comprises a cloth.

18. The adjustable earphone of claim 16, further comprising a cord clip, wherein the cord further comprises a first portion adjacent to the first end of the cord and a second portion adjacent to the second end of the cord, wherein the first portion comprises a single strand and the second portion comprises two strands, wherein the cord clip is slidably coupled to the two strands of the second portion.

19. The adjustable earphone of claim 18, wherein the cord clip further comprises two apertures, wherein each aperture is configured to insertably receive one of the two strands of the second portion of the cord.

20. The adjustable earphone of claim 18, wherein the cord clip further comprises a spring clip that is configured to clip to the cord.

21. An adjustable earphone, comprising:

an ear canal portion, the ear canal portion having a shape, wherein the ear canal portion is operable for placement in a user's ear canal; and

means for adjusting the shape of the ear canal portion by a user when the ear canal portion is positioned in the user's ear.

22. An adjustable ear insert, comprising:

an ear canal portion configured for insertion in a user's ear canal, the ear canal portion having a first shape; and

an adjustment assembly at least partially located within the ear canal portion, wherein the adjustment assembly is operable to cause the ear canal portion to have at least a second shape.

23. The adjustable ear insert of claim 22, wherein the adjustment assembly comprises a control member accessible to a user and an expansion assembly operably coupled to the control member, wherein the control member is configured to actuate the expansion assembly such that the ear canal portion has at least a second shape when the expansion assembly is actuated.

24. The adjustable ear insert of claim 22, further comprising a first end and a second end, wherein a transducer is located between the first end and the second end.

25. The adjustable ear insert of claim 22, wherein the ear canal portion is configured to resist audible sound from reaching an ear drum of the user when the adjustable ear insert is inserted in the user's ear canal.

26. An adjustable ear insert, comprising:

an inner end having an eartip, wherein the inner end is configured to be placed within an ear canal of a user; and

an outer end having a control feature, wherein the outer end is configured to remain outside the ear canal, wherein the control feature is accessible by the user to expand or compact the eartip.

27. The adjustable ear insert of claim 26, further comprising a transducer located between the inner end and the outer end.

28. The adjustable ear insert of claim 26, wherein the ear canal portion is configured to resist audible sound from reaching an ear drum of the user when the adjustable ear insert is inserted in the user's ear canal.

AMENDED CLAIMS
received by the International Bureau on 07 April 2009 (07.04.2009)

1. An adjustable earphone, comprising:

a housing having a first side and a second side;

a resilient cushion attached to the first side of the housing, the resilient cushion having a compact shape and an opening;

at least one cantilever arm protruding from the first side of the housing, wherein at least part of the cantilever arm is located within the opening of the resilient cushion;

a dial rotatably mounted in the housing, wherein at least part of the dial extends from the second side of the housing, wherein the dial includes threads; and

an actuator comprising a first portion and a second portion, the second portion having threads, wherein the actuator is slidably mounted in the housing, wherein the actuator threads operably engage the dial threads such that rotation of the dial in a first direction translates the first portion of the rigid actuator into contact with the cantilever arm;

wherein the first portion of the actuator is configured to bend the cantilever arm into the resilient cushion as the actuator contacts the arm, wherein the cantilever arm is configured to force the resilient cushion to have an expanded shape as the cantilever arm bends into the cushion.

2. An adjustable earphone, comprising:

a housing having a first side and a second side, wherein the first side of the housing is configured to attach to a cushion;

at least one cantilever arm protruding from the first side of the housing, wherein at least part of the cantilever arm is configured to be located within an opening of the cushion when the cushion is attached to the housing;

a dial rotatably mounted in the housing, wherein at least part of the dial extends from the second side of the housing, wherein the dial includes threads; and

an actuator comprising a first portion and a second portion, the second portion having threads, wherein the actuator is slidably mounted in the housing, wherein the actuator threads operably engage the dial threads such that rotation of the dial in a first direction translates the first portion of the rigid actuator into contact with the cantilever arm;

wherein the first portion of the actuator is configured to bend the cantilever arm as the actuator contacts the arm.

3. An adjustable earphone, comprising:

a housing;

an ear canal portion adjacent to the housing, the ear canal portion having a first shape; and

an adjustment assembly operably coupled to the housing, wherein the adjustment assembly comprises:

a movable member movable with respect to the housing between a first position and at least a second position;

an expansion assembly configured to receive the movable member; and

a control member configured to move the movable member such that actuation of the control member causes the movable member to move from a first position to at least a second position;

wherein the movable member is configured to cause the expansion assembly to expand in at least one direction when the movable member is moved to the second position, wherein the expansion assembly is configured to force the ear canal portion to have at least a second shape when the expansion assembly is expanded.

4. The adjustable earphone of claim 3, wherein the expansion assembly is configured to retract in at least one direction when the movable member is moved to the first position, wherein the ear canal portion is configured to have the first shape when the expansion assembly is retracted.

5. The adjustable earphone of claim 3, wherein the ear canal portion comprises a resilient material.

6. The adjustable earphone of claim 3, wherein the control member comprises a rotatable dial.

7. The adjustable earphone of claim 3, wherein the control member comprises a pressable button.

8. The adjustable earphone of claim 3, wherein the control member comprises a squeezable member.

9. An adjustable earphone, comprising:

a housing;

an ear canal portion adjacent to the housing, the ear canal portion having a first shape; and

an adjustment assembly operably coupled to the housing such that actuation of the adjustment assembly causes the ear canal portion to have at least a second shape.

10. The adjustable earphone of claim 9, wherein the adjustment assembly comprises a control member accessible to a user and an expansion assembly operably coupled to the control member, wherein the control member is configured to actuate the expansion assembly such that the ear canal portion has at least a second shape when the expansion assembly is actuated

11. The adjustable earphone of claim 10, further comprising an inner end and an outer end, wherein the ear canal portion is adjacent to the inner end and the control member is adjacent to the outer end, wherein the expansion assembly comprises an actuator coupled to the ear canal portion near the inner end.

12. The adjustable earphone of claim 10, wherein the expansion assembly comprises at least one bendable arm.

13. The adjustable earphone of claim 10, wherein the expansion assembly comprises a rotatable actuator having lobes.

14. The adjustable earphone of claim 10, wherein the expansion assembly comprises a coiled element.

15. The adjustable earphone of claim 9, wherein the adjustment assembly is operably coupled to the housing such that actuation of the adjustment assembly causes the ear canal portion to have at least a third shape.

16. The adjustable earphone of claim 9, further comprising a cord having a first end, a second end, and an electrical connector located at the first end, wherein the housing is located at the second end of the cord, wherein the cord is at least partially covered with a soft material.

17. The adjustable earphone of claim 16, wherein the soft material comprises a cloth.

18. The adjustable earphone of claim 16, further comprising a cord clip, wherein the cord further comprises a first portion adjacent to the first end of the cord and a second portion adjacent to the second end of the cord, wherein the first portion comprises a single strand and the second portion comprises two strands, wherein the cord clip is slidably coupled to the two strands of the second portion.

19. The adjustable earphone of claim 18, wherein the cord clip further comprises two apertures, wherein each aperture is configured to insertably receive one of the two strands of the second portion of the cord.

AMENDED SHEET (ARTICLE 19)

35

20. The adjustable earphone of claim 18, wherein the cord clip further comprises a spring clip that is configured to clip to the cord.

21. An adjustable earphone, comprising:

an ear canal portion, the ear canal portion having a shape, wherein the ear canal portion is operable for placement in a user's ear canal; and

means for adjusting the shape of the ear canal portion by a user when the ear canal portion is positioned in the user's ear.

22. An adjustable ear insert, comprising:

an ear canal portion configured for insertion in a user's ear canal, the ear canal portion having a first shape; and

an adjustment assembly at least partially located within the ear canal portion, wherein the adjustment assembly is operable to cause the ear canal portion to have at least a second shape.

23. The adjustable ear insert of claim 22, wherein the adjustment assembly comprises a control member accessible to a user and an expansion assembly operably coupled to the control member, wherein the control member is configured to actuate the expansion assembly such that the ear canal portion has at least a second shape when the expansion assembly is actuated.

24. The adjustable ear insert of claim 22, further comprising a first end and a second end, wherein a transducer is located between the first end and the second end.

25. The adjustable ear insert of claim 22, wherein the ear canal portion is configured to resist audible sound from reaching an ear drum of the user when the adjustable ear insert is inserted in the user's ear canal.

26. An adjustable ear insert, comprising:

an inner end having an eartip, wherein the inner end is configured to be placed within an ear canal of a user; and

an outer end having a control feature, wherein the outer end is configured to remain outside the ear canal, wherein the control feature is accessible by the user to expand or compact the eartip.

27. The adjustable ear insert of claim 26, further comprising a transducer located between the inner end and the outer end.

28. The adjustable ear insert of claim 26, wherein the ear canal portion is configured to resist audible sound from reaching an ear drum of the user when the adjustable ear insert is inserted in the user's ear canal.

29. An adjustable eaphone, comprising:

an ear canal portion configured for insertion in a user's ear canal, the ear canal portion having a compact shape;

a rotatable dial accessible to and rotatable by a user when the ear canal portion is inserted in the user's ear canal; and

an expansion assembly operably coupled to the rotatable dial, wherein the expansion assembly is at least partially located within the ear canal portion, and wherein the expansion assembly is operable to cause the ear canal portion to expand into at least an expanded shape without external force being applied to the ear canal portion;

wherein the rotatable dial is configured to actuate the expansion assembly such that the ear canal portion has one of a continuum of shapes between the compact shape and the expanded shape.

30. An adjustable eaphone, comprising:

an ear canal portion configured for insertion in a user's ear canal, the ear canal portion having an expanded shape;

a rotatable dial accessible to and rotatable by a user when the ear canal portion is inserted in the user's ear canal; and

an expansion assembly operably coupled to the rotatable dial, wherein the expansion assembly is at least partially located within the ear canal portion, and wherein the expansion assembly is operable to cause the ear canal portion to retract into at least a compact shape without external force being applied to the ear canal portion;

wherein the rotatable dial is configured to actuate the expansion assembly such that the ear canal portion has one of a continuum of shapes between the expanded shape and the compact shape.

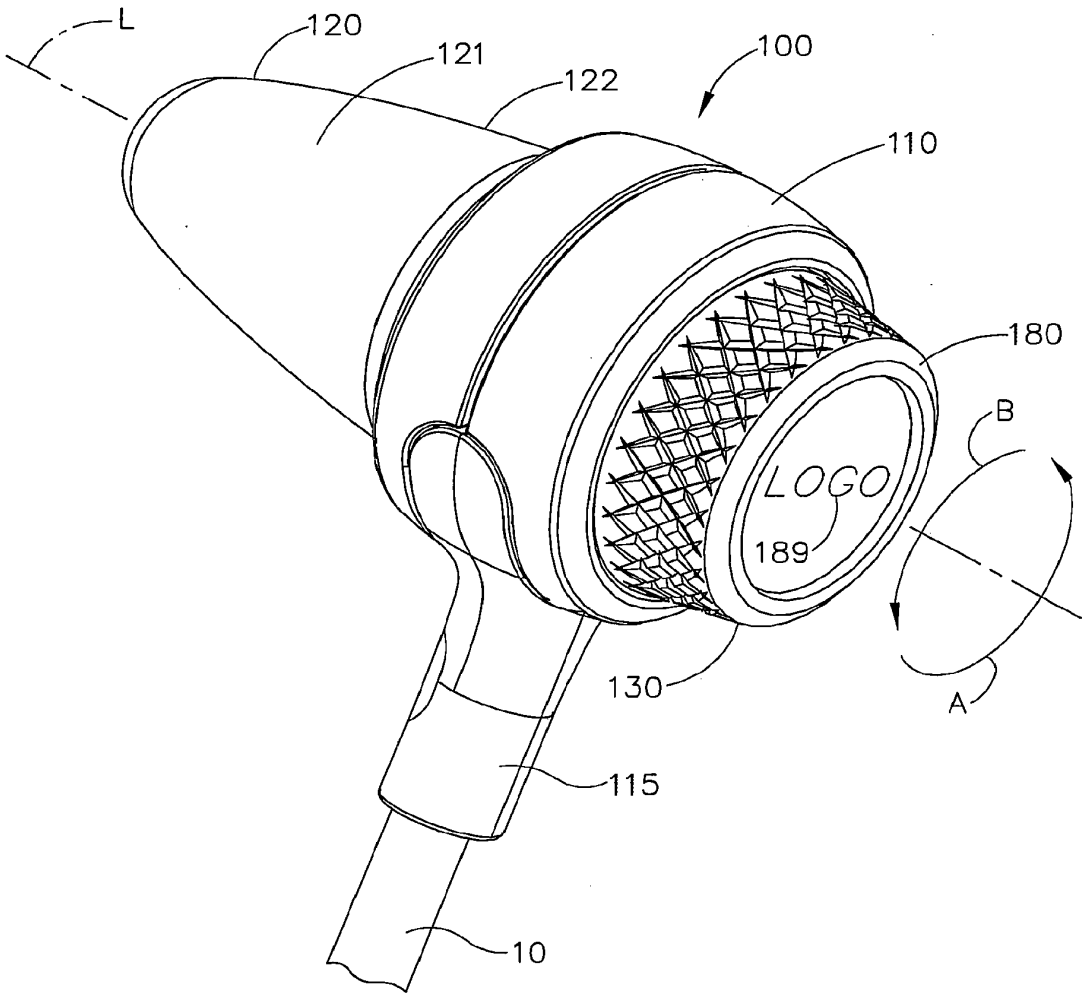

FIG. 1A

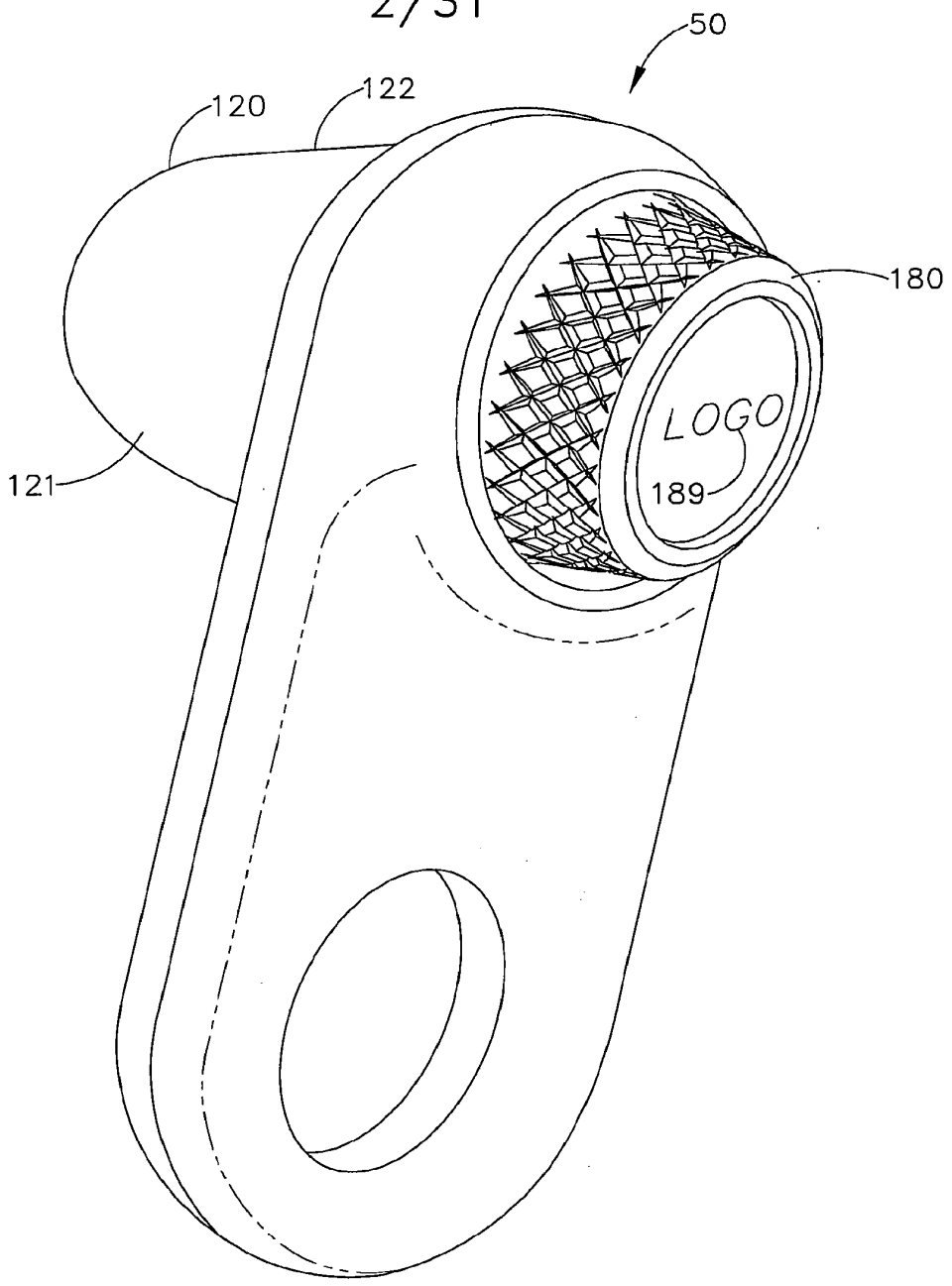

FIG. 1B

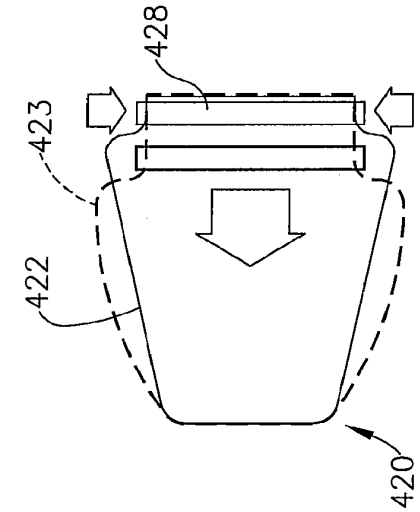

FIG. 2C

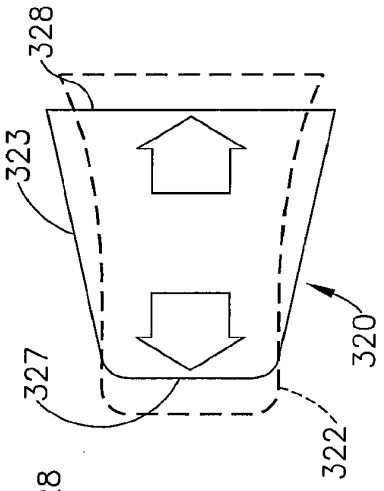

FIG. 2B

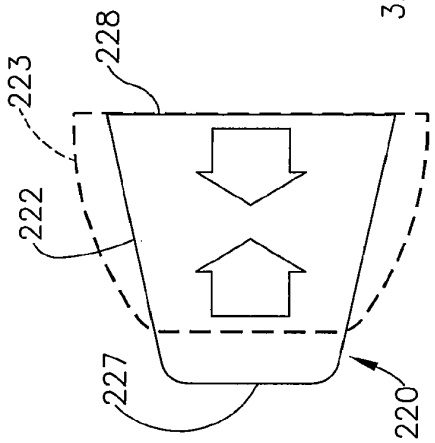

FIG. 2A

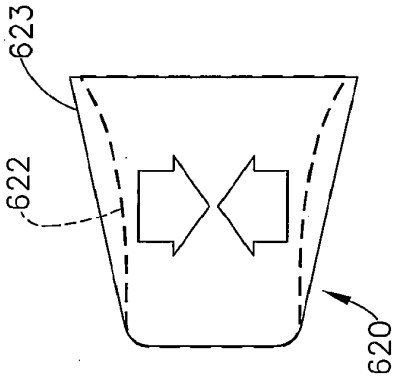

FIG. 2E

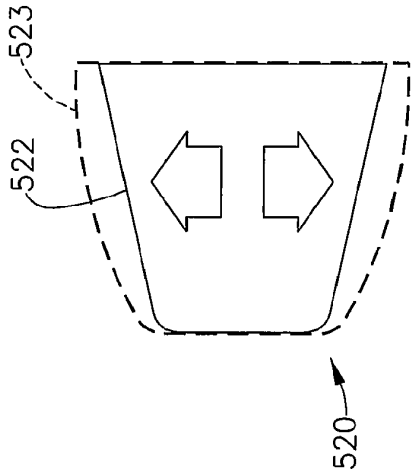

FIG. 2D

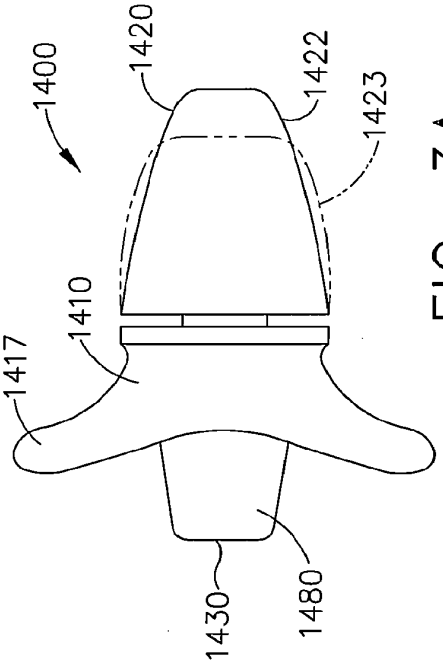

FIG. 3A

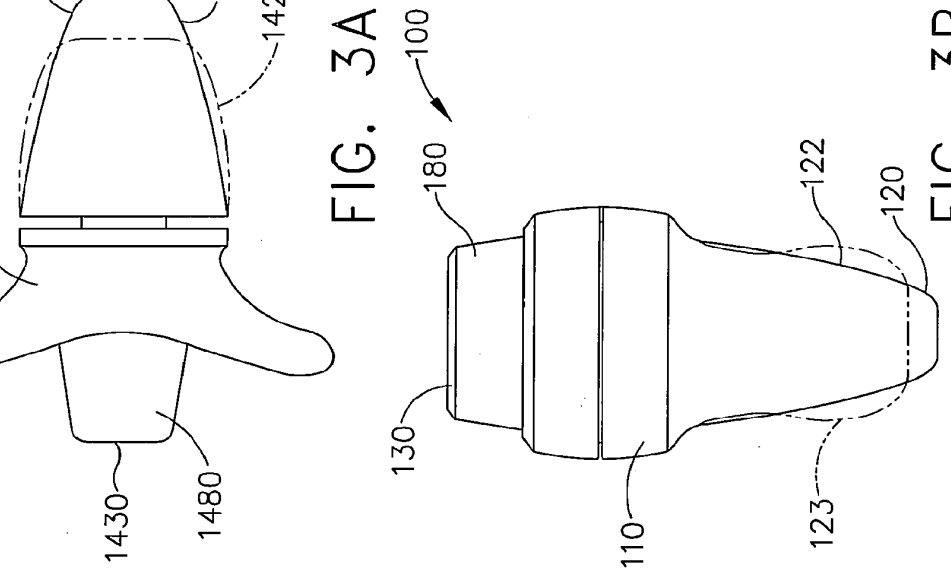

FIG. 3B

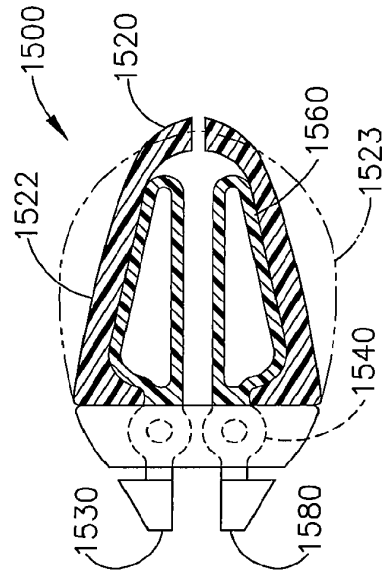

FIG. 3C

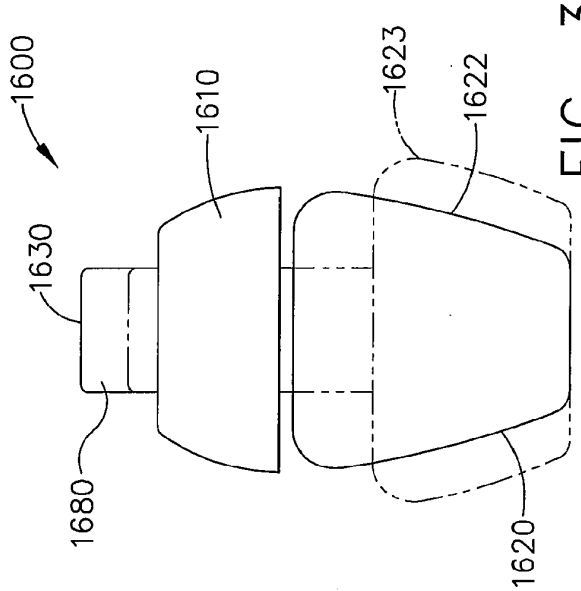

FIG. 3D

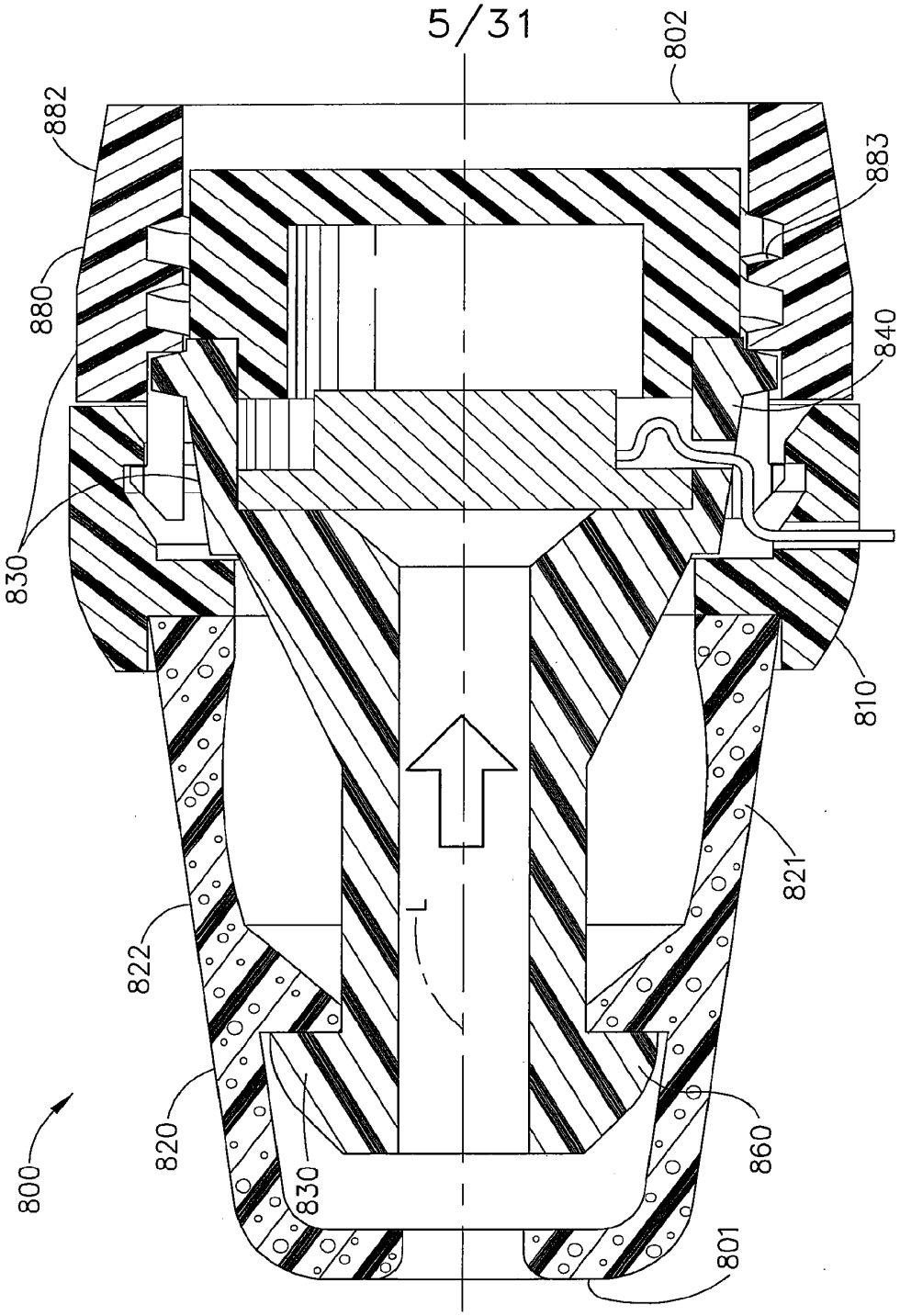

FIG. 4

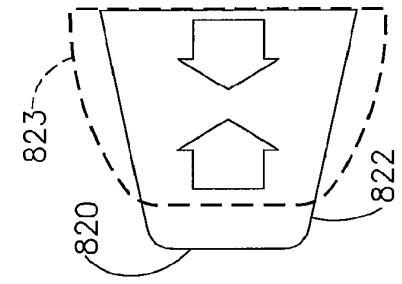

FIG. 5A

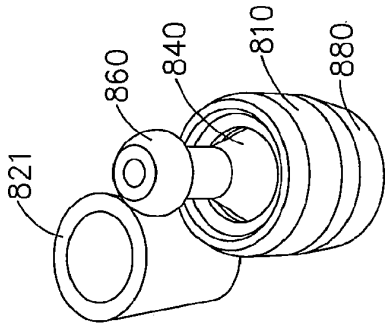

FIG. 5B

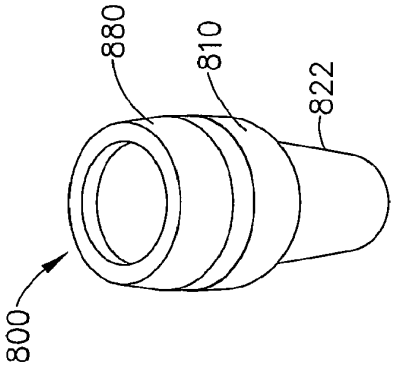

FIG. 5C

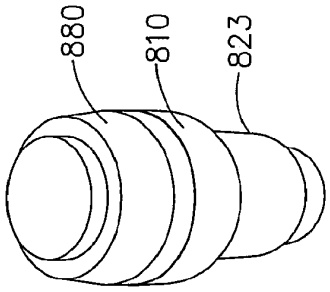

FIG. 5D

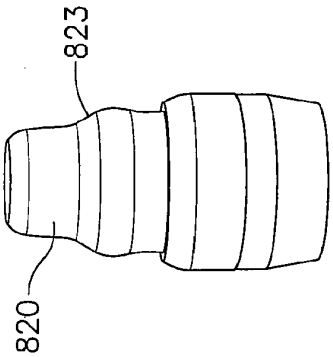

FIG. 5G

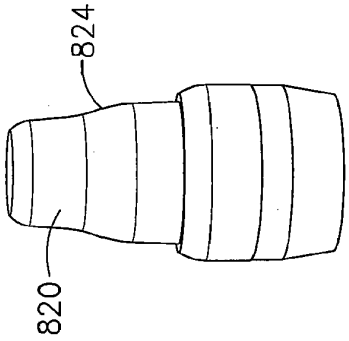

FIG. 5F

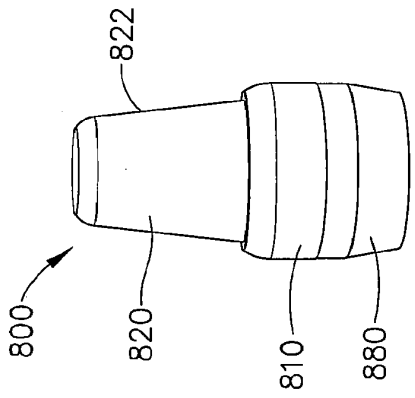

FIG. 5E

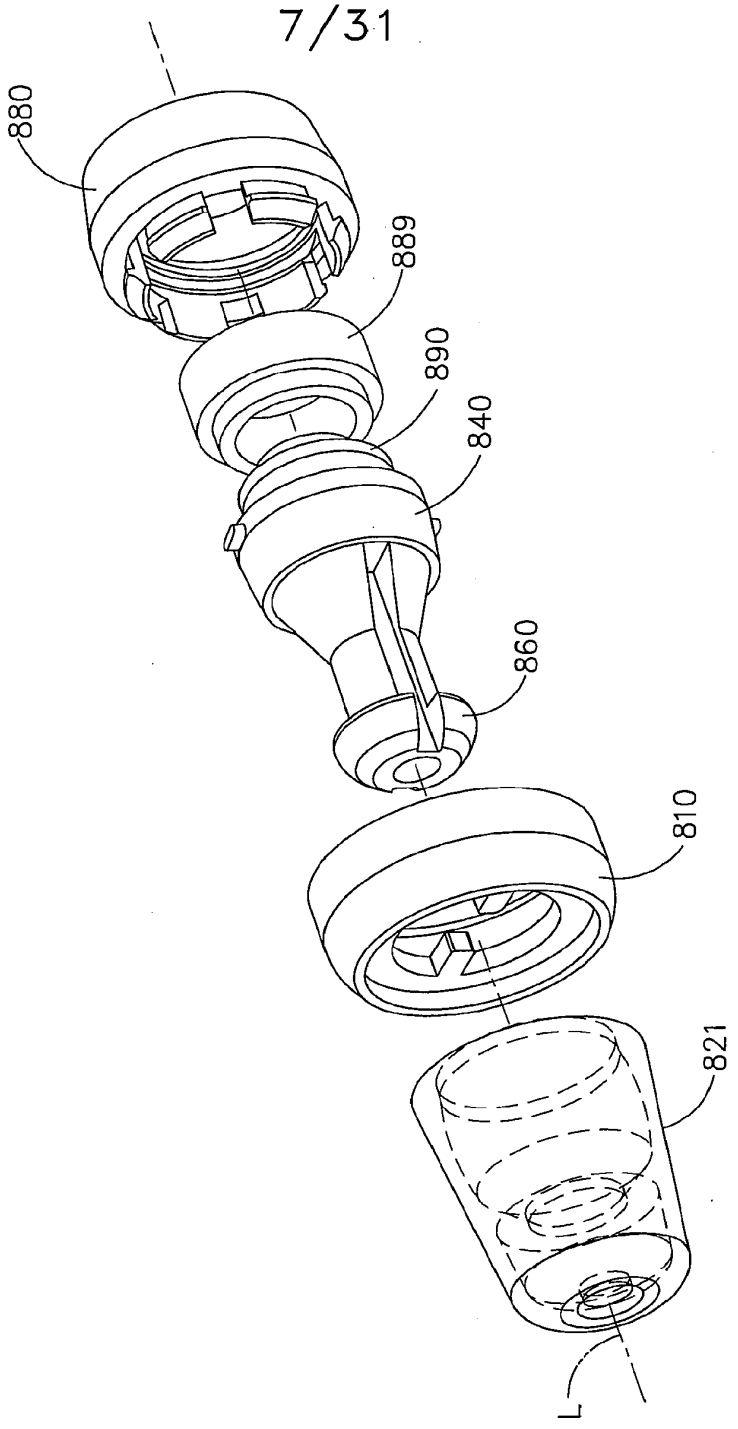

FIG. 6

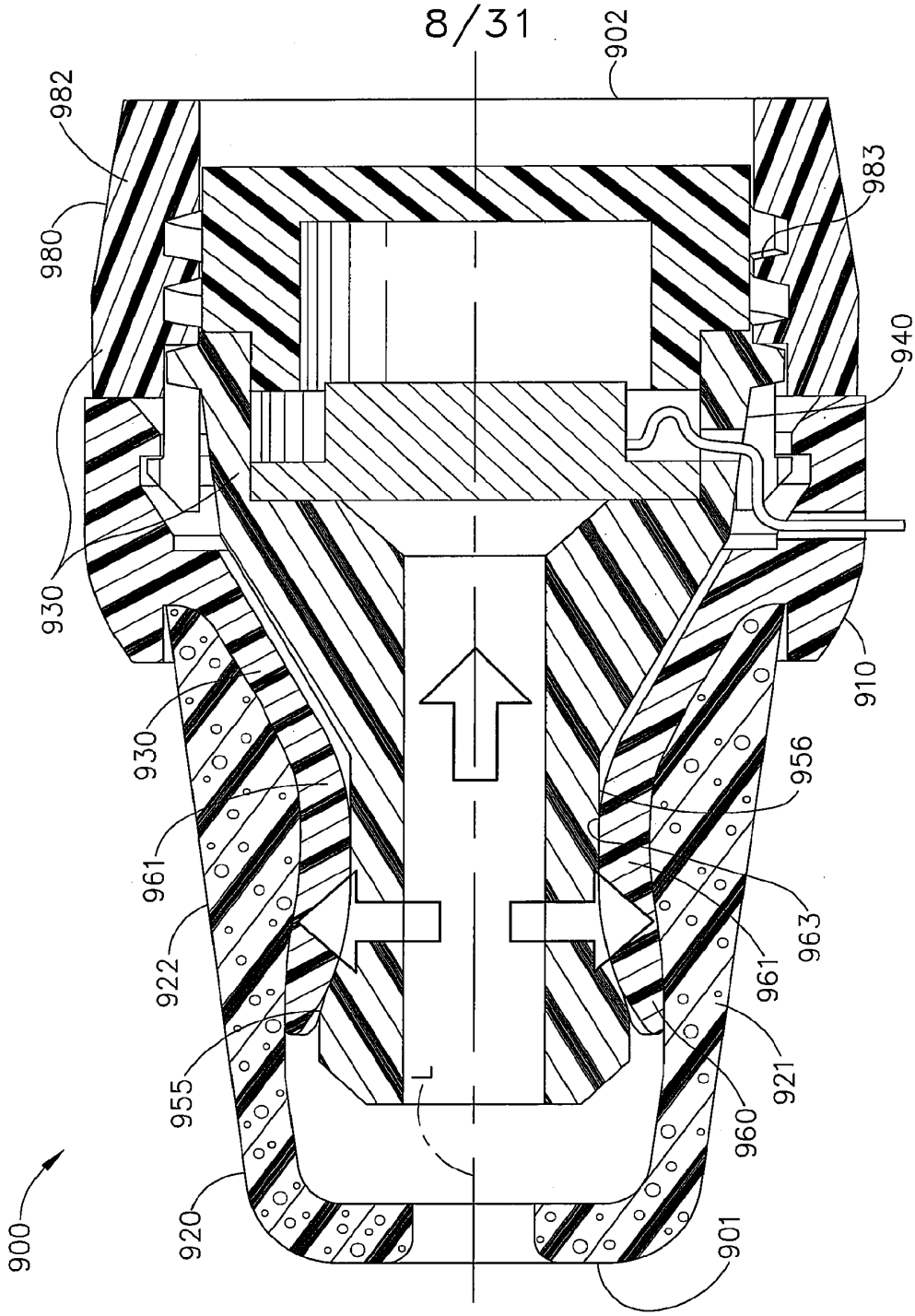
902
982
983
980
940
930
910
930
956
961
963
922
961
921
955
960
L
920
901
900

FIG. 7

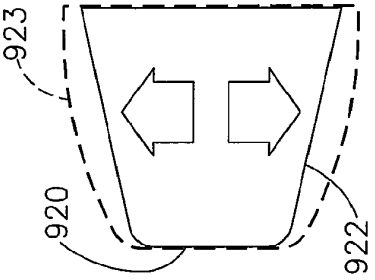

FIG. 8A

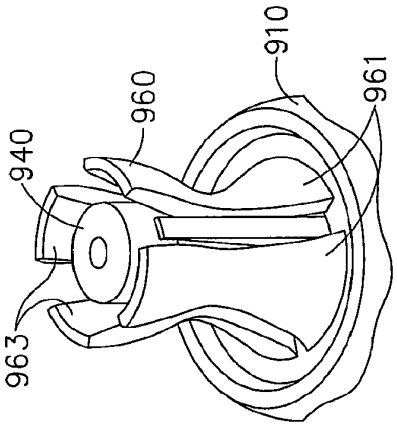

FIG. 8B

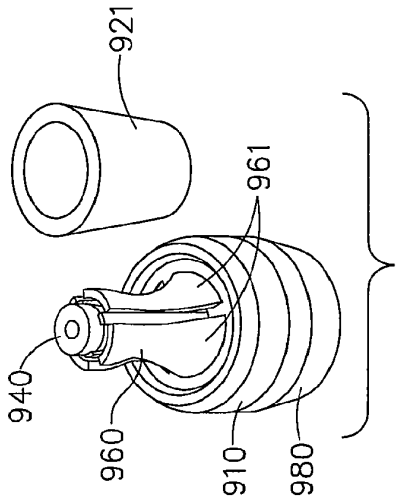

FIG. 8C

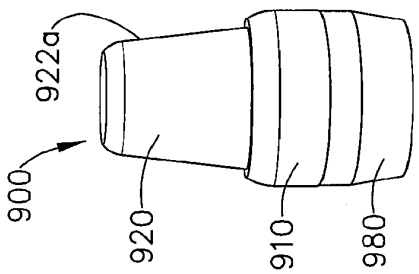

FIG. 8D

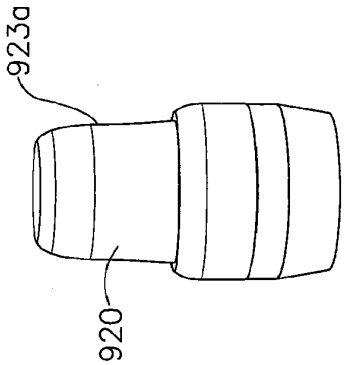

FIG. 8E

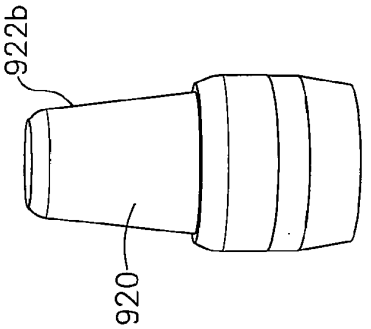

FIG. 8F

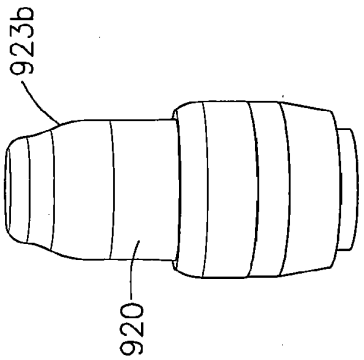

FIG. 8G

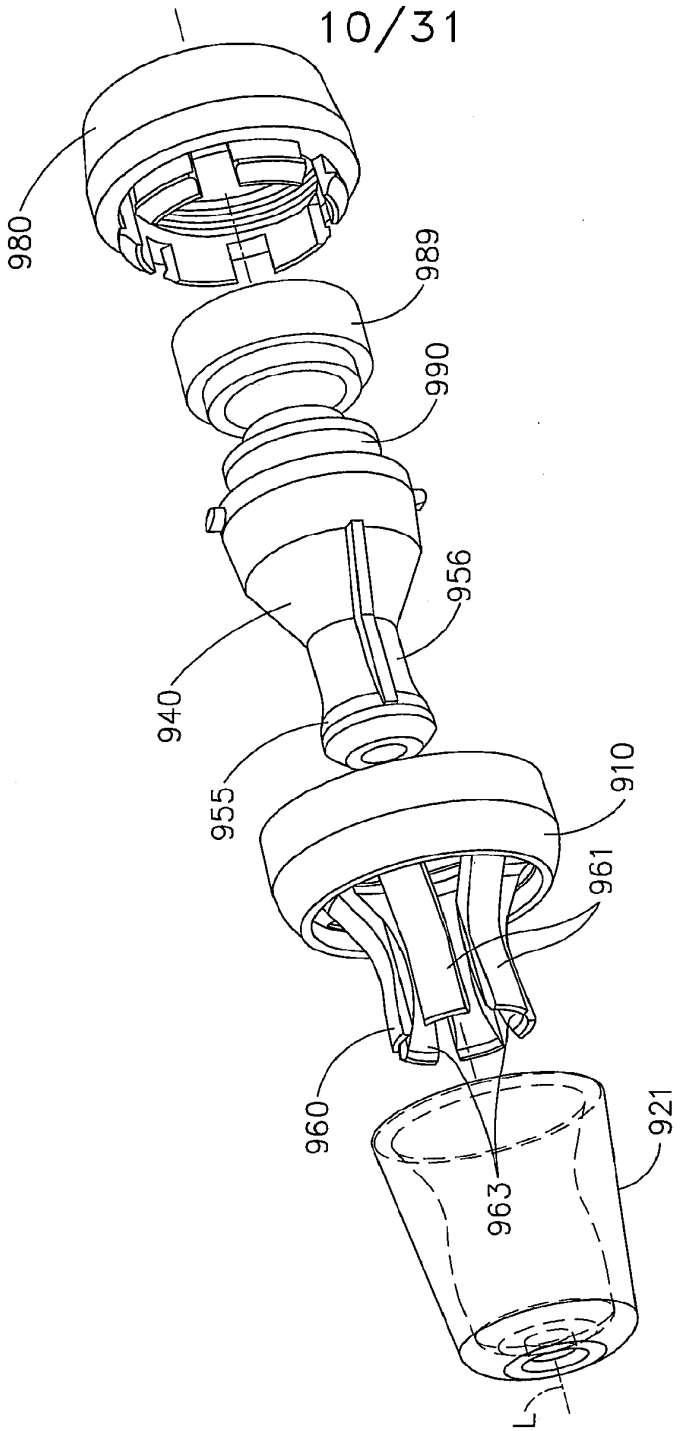

FIG. 9

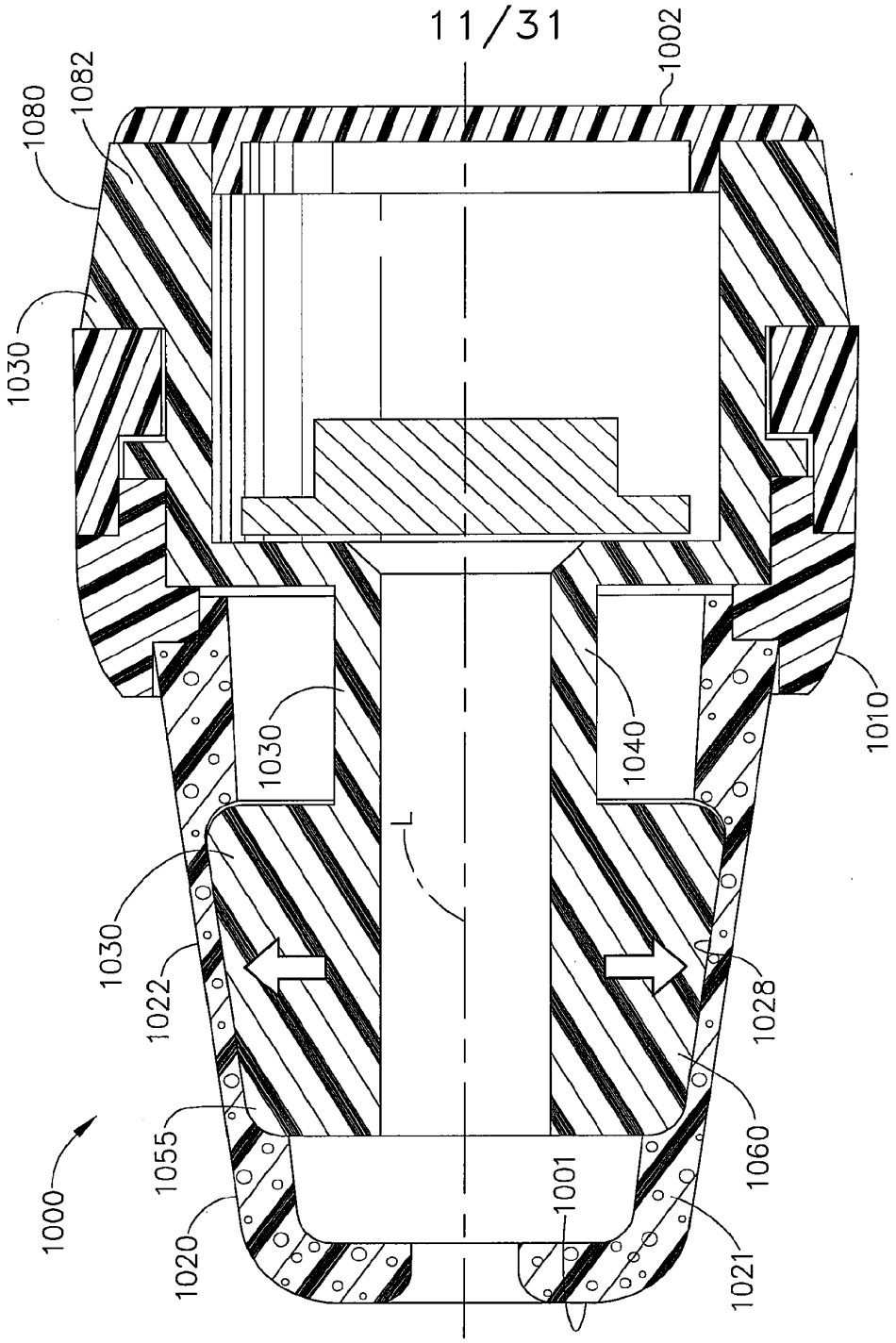
1002
1080
1082
1030
1030
1040
1010
L
1030
1022
1028
1055
1060
1000
1001
1020
1021

FIG. 10

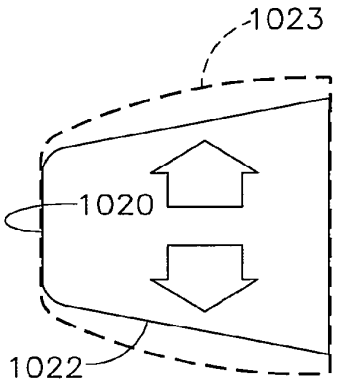

FIG. 11A

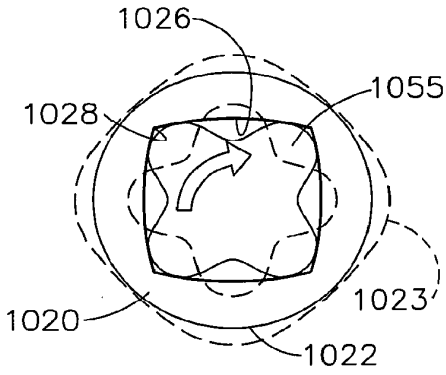

FIG. 11B

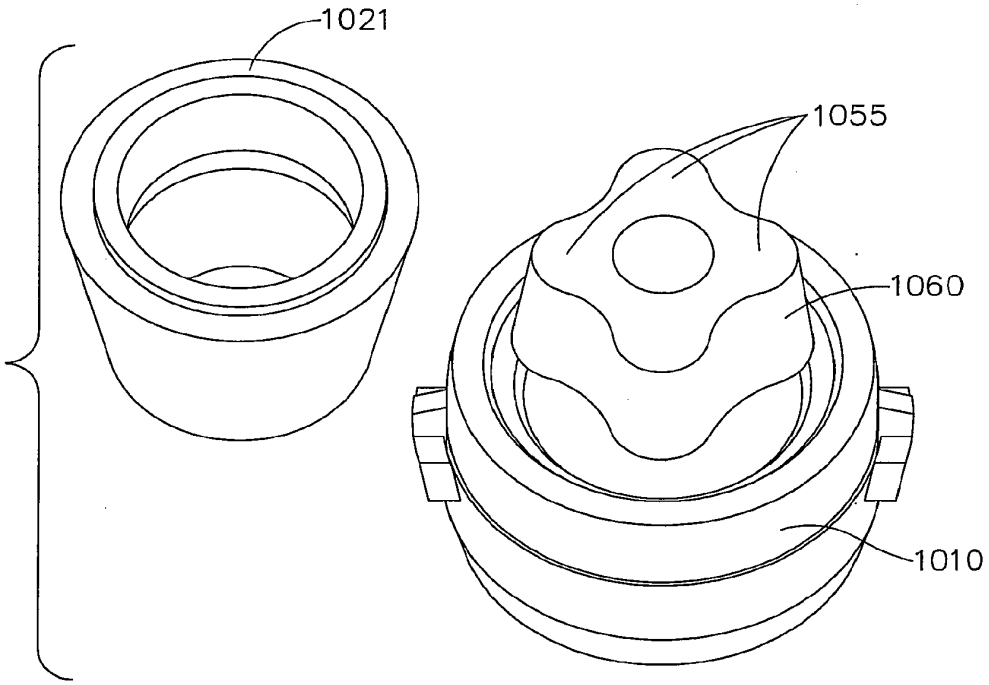

FIG. 11C

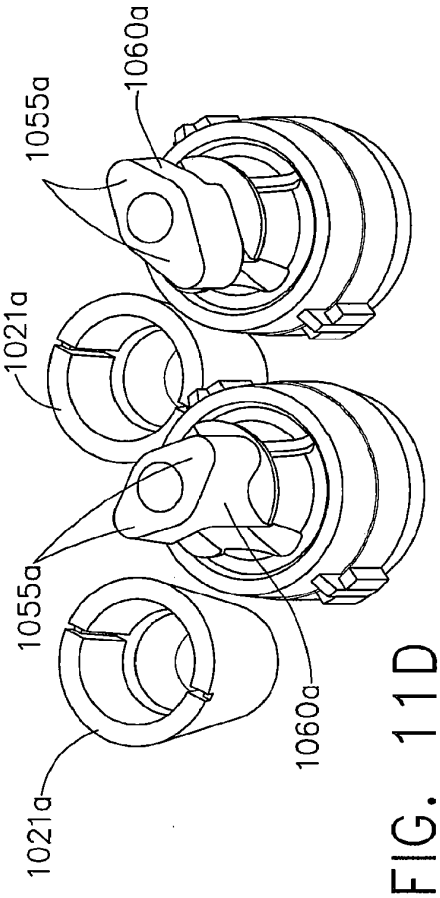

FIG. 11D

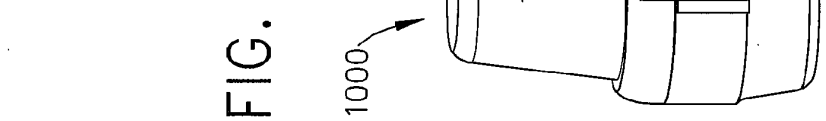

FIG. 11E

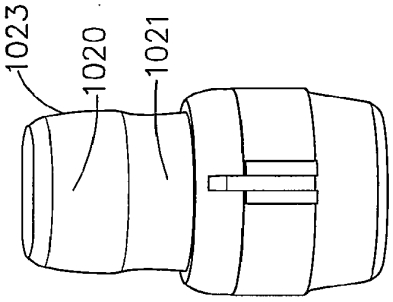

FIG. 11F

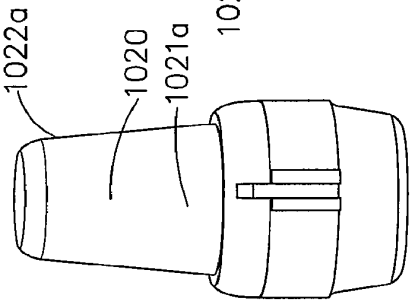

FIG. 11G

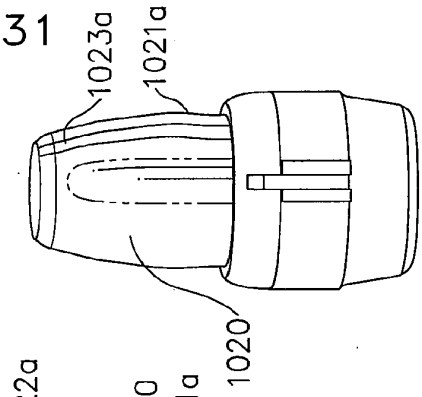

FIG. 11H

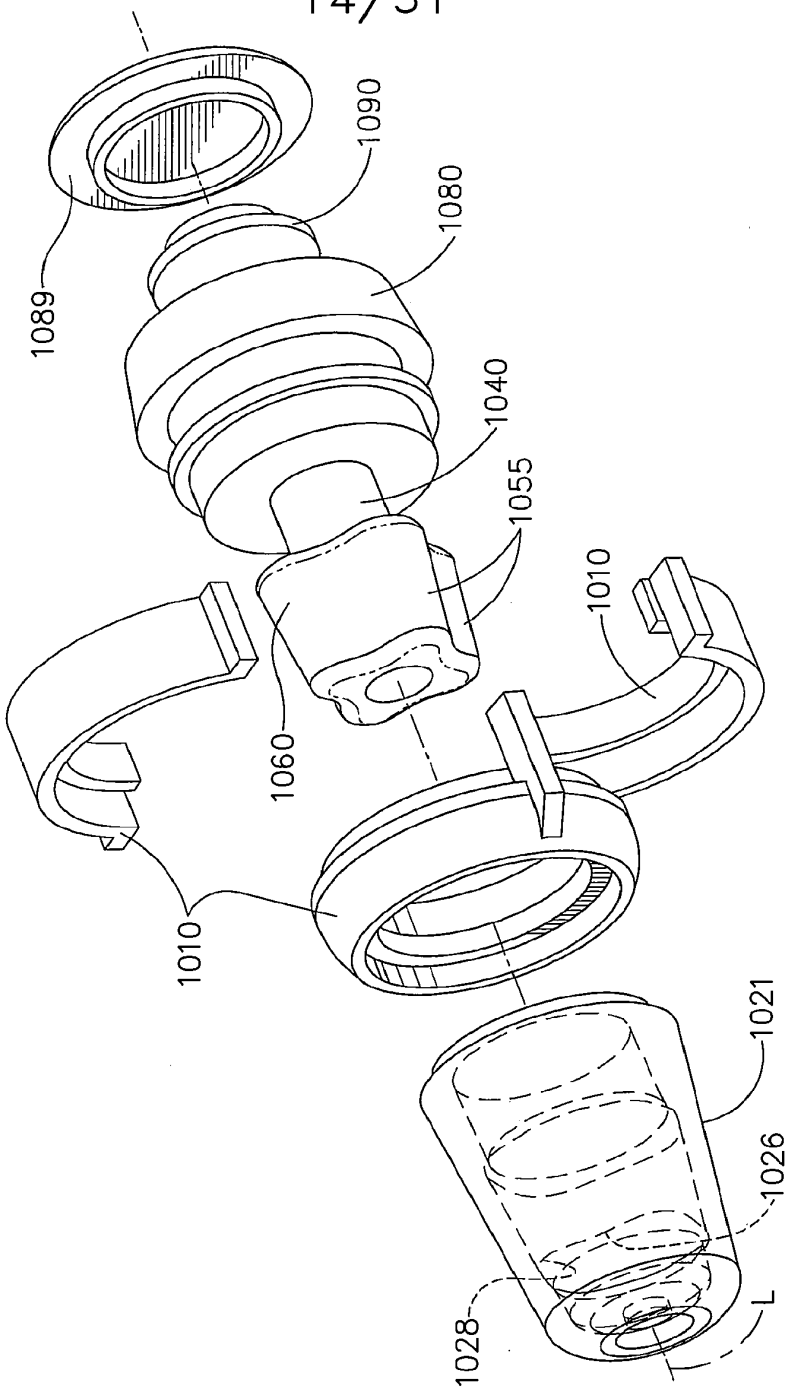

FIG. 12

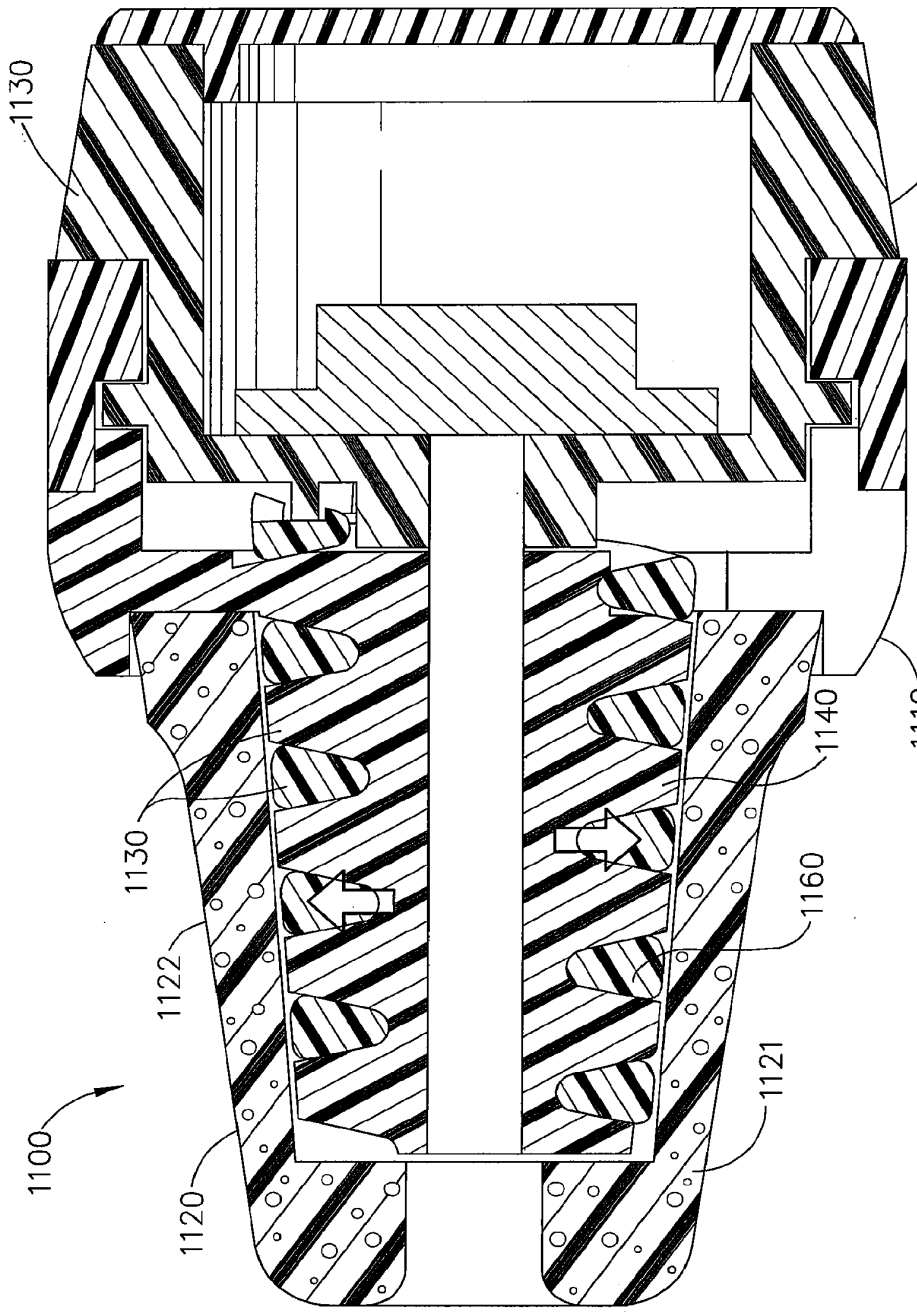

FIG. 13

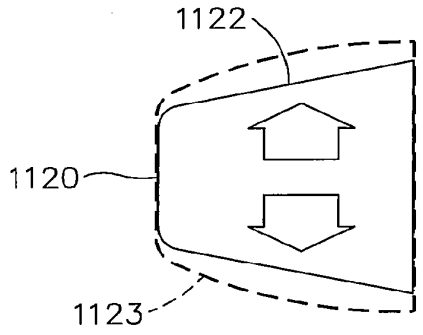

FIG. 14A

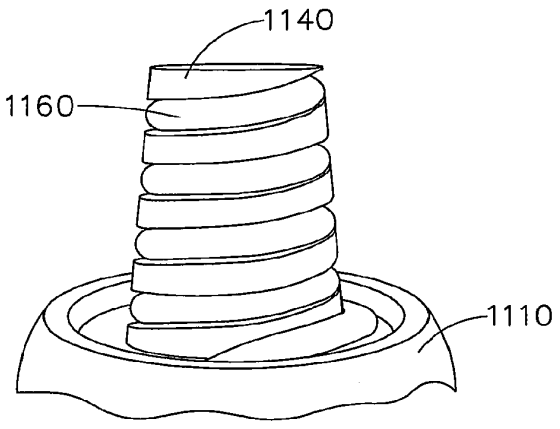

FIG. 14B

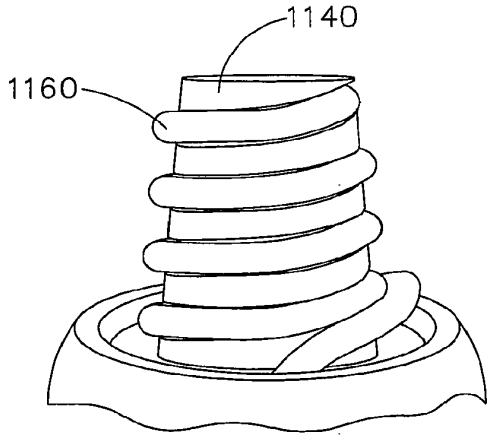

FIG. 14C

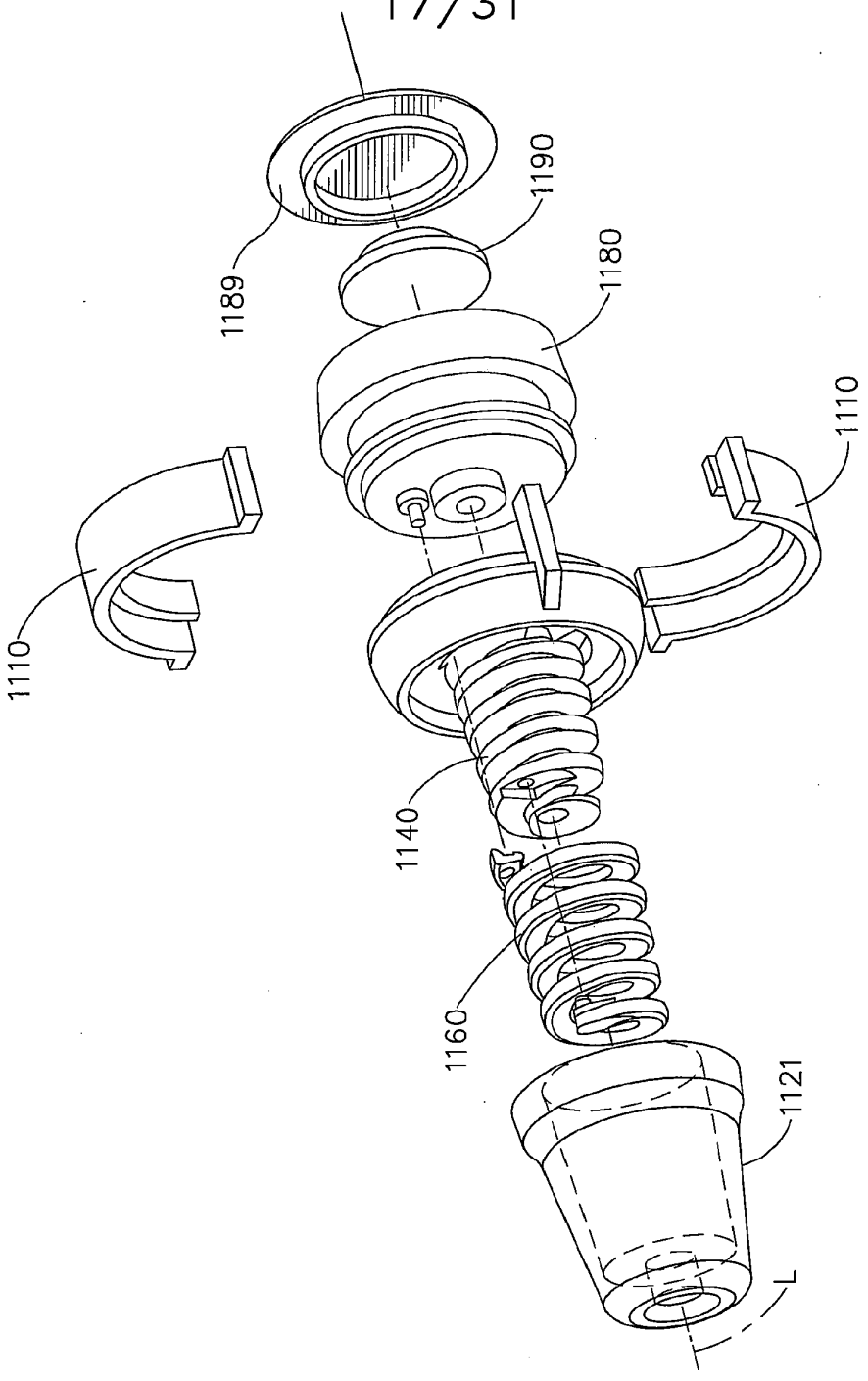

FIG. 15

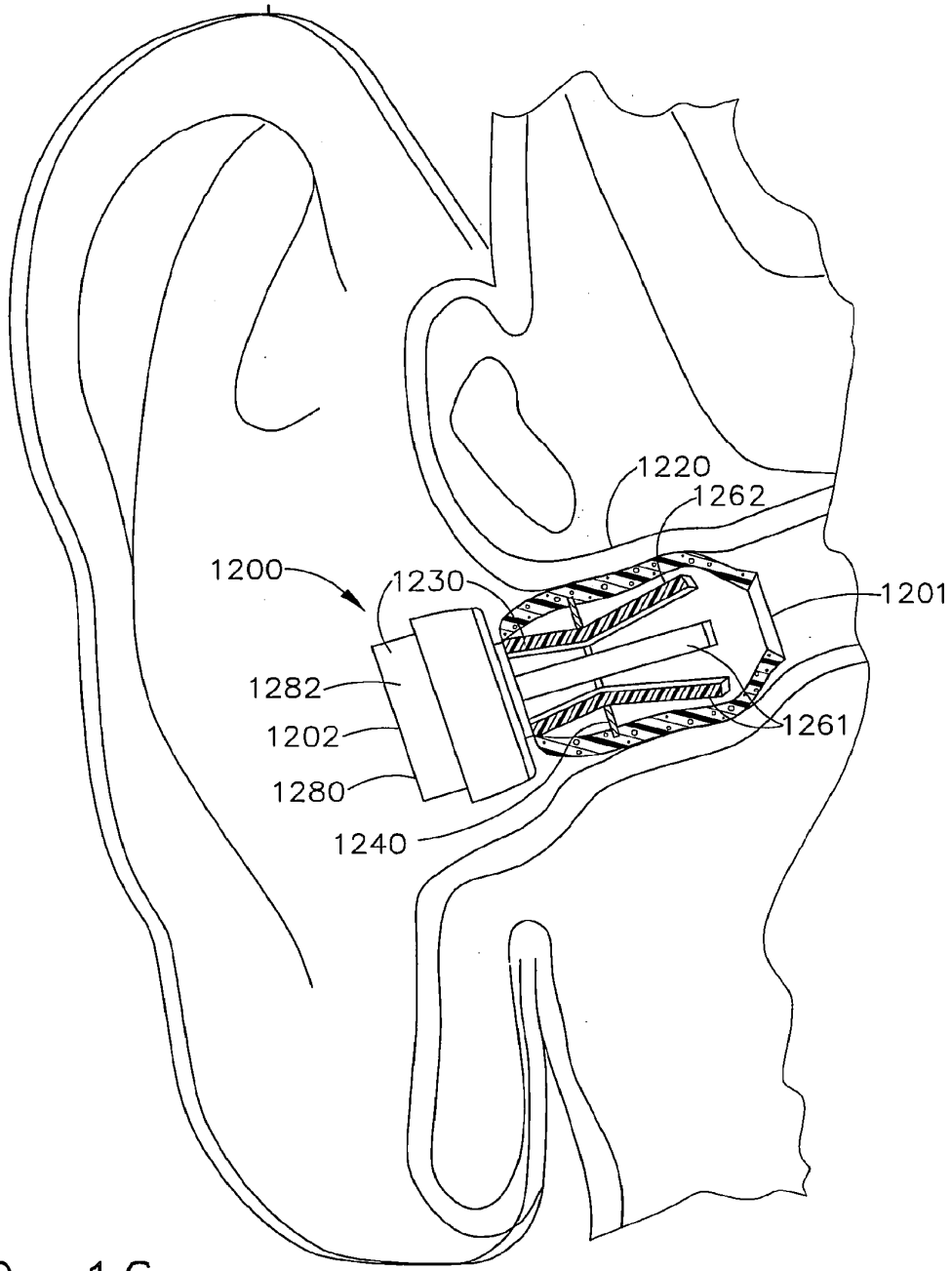

FIG. 16

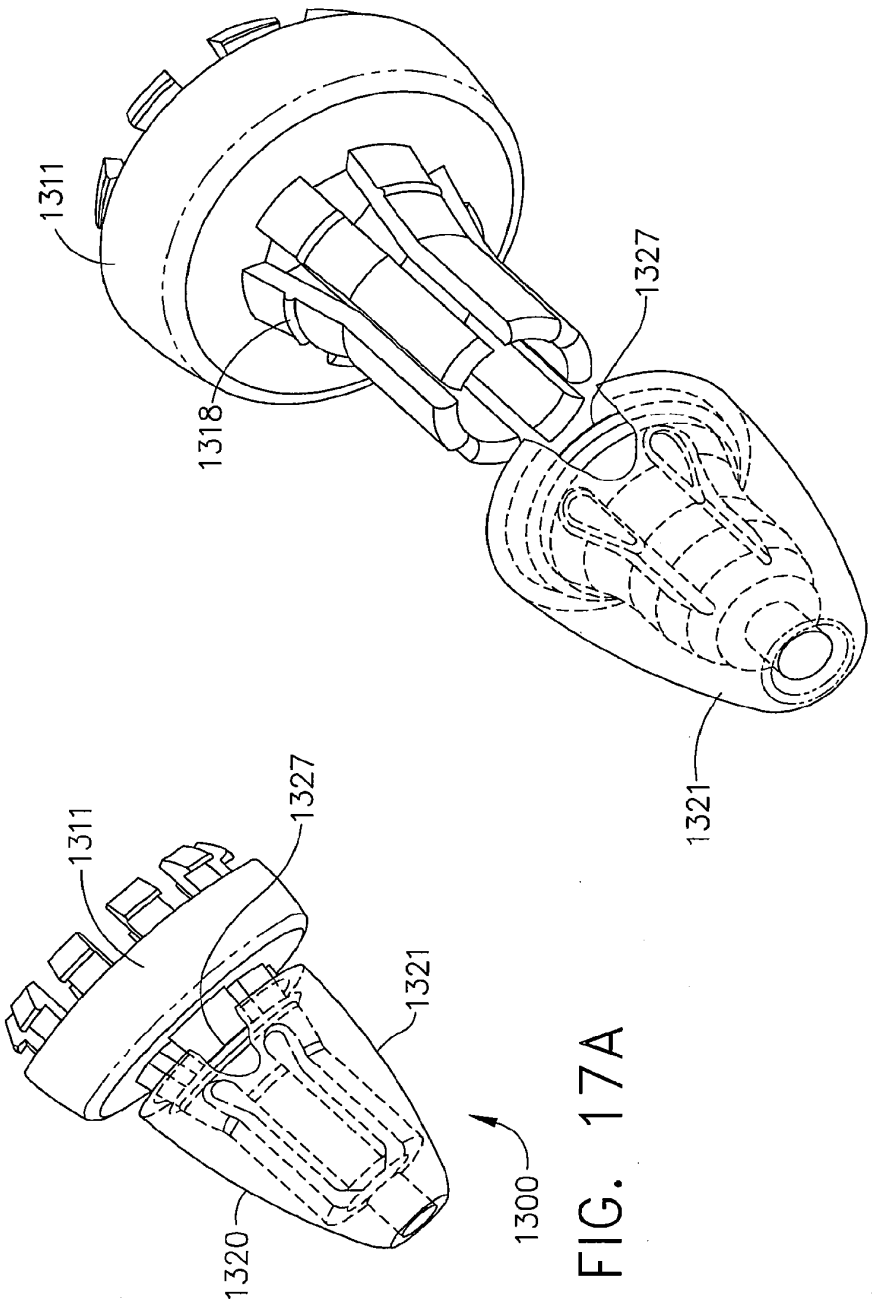

FIG. 17B

FIG. 17A

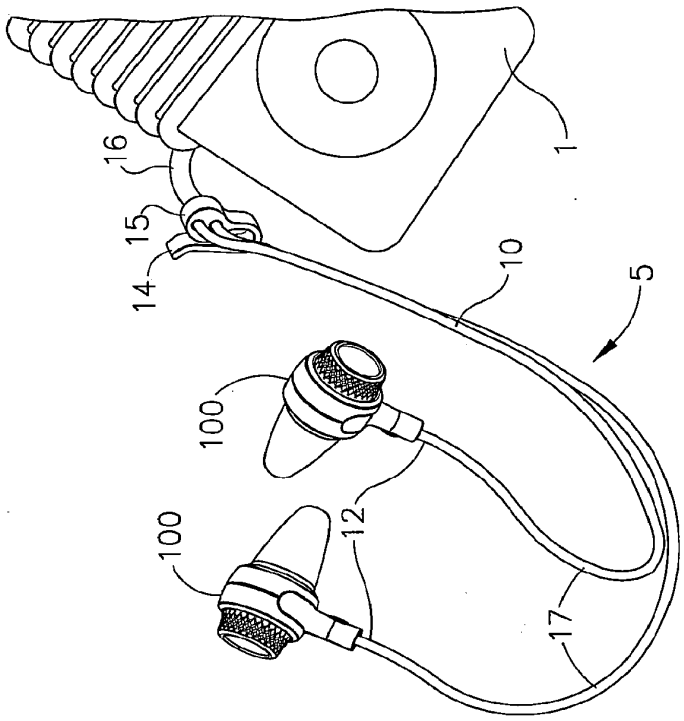

FIG. 18B

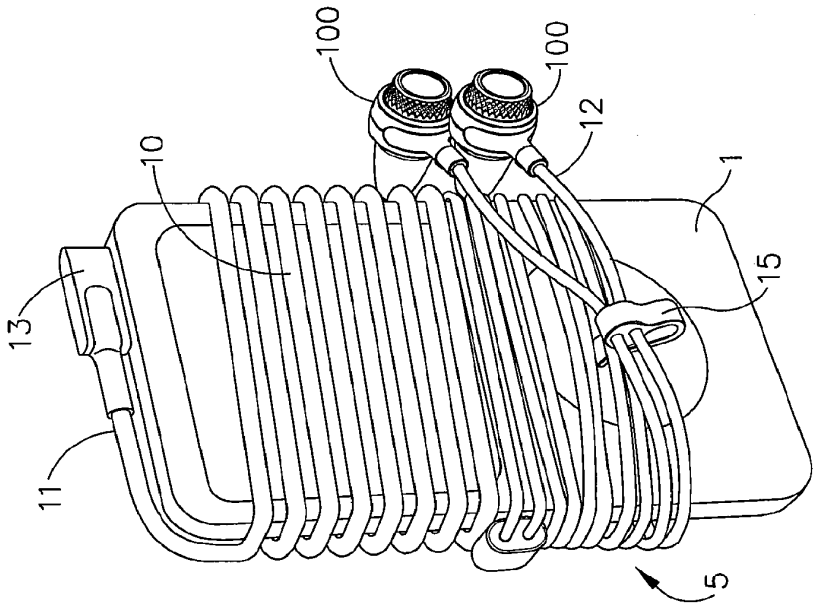

FIG. 18A

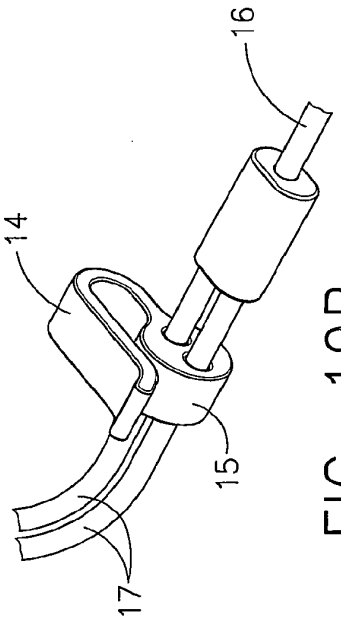

FIG. 19B

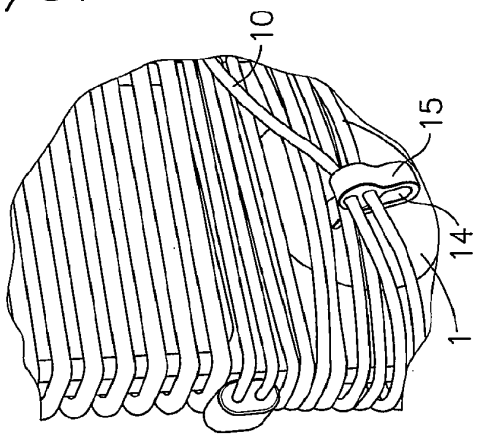

FIG. 19C

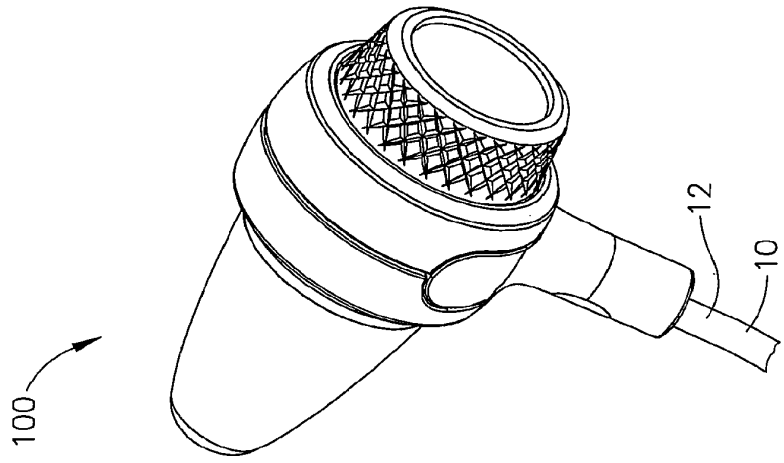

FIG. 19A

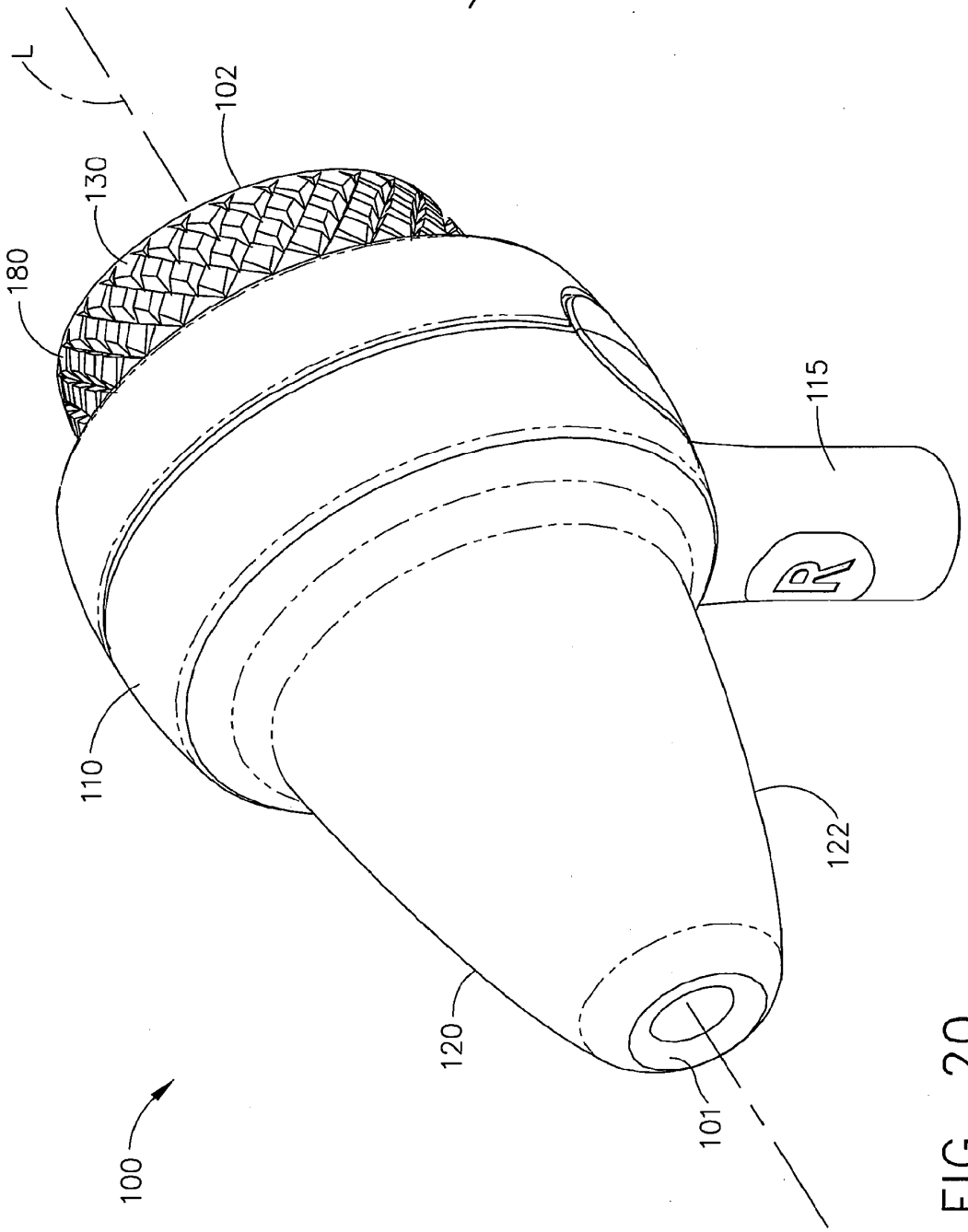

FIG. 20

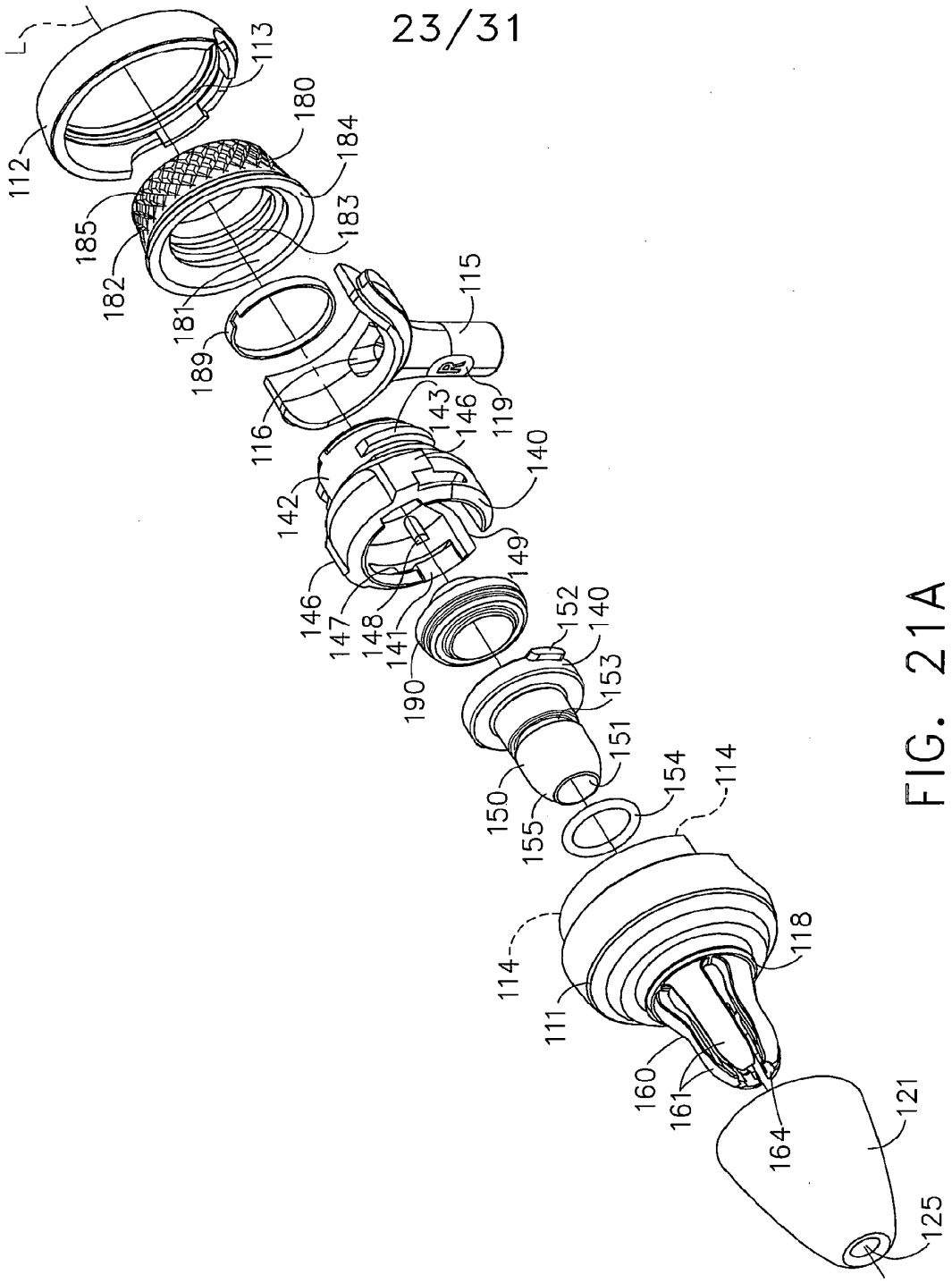
L
112
113
180
184
183
185
182
181
189
115
116
143
146
119
140
142
149
146
147
148
141
190
152
140
153
151
150
155
154
114
114
118
111
160
161
164
121
125

FIG. 21A

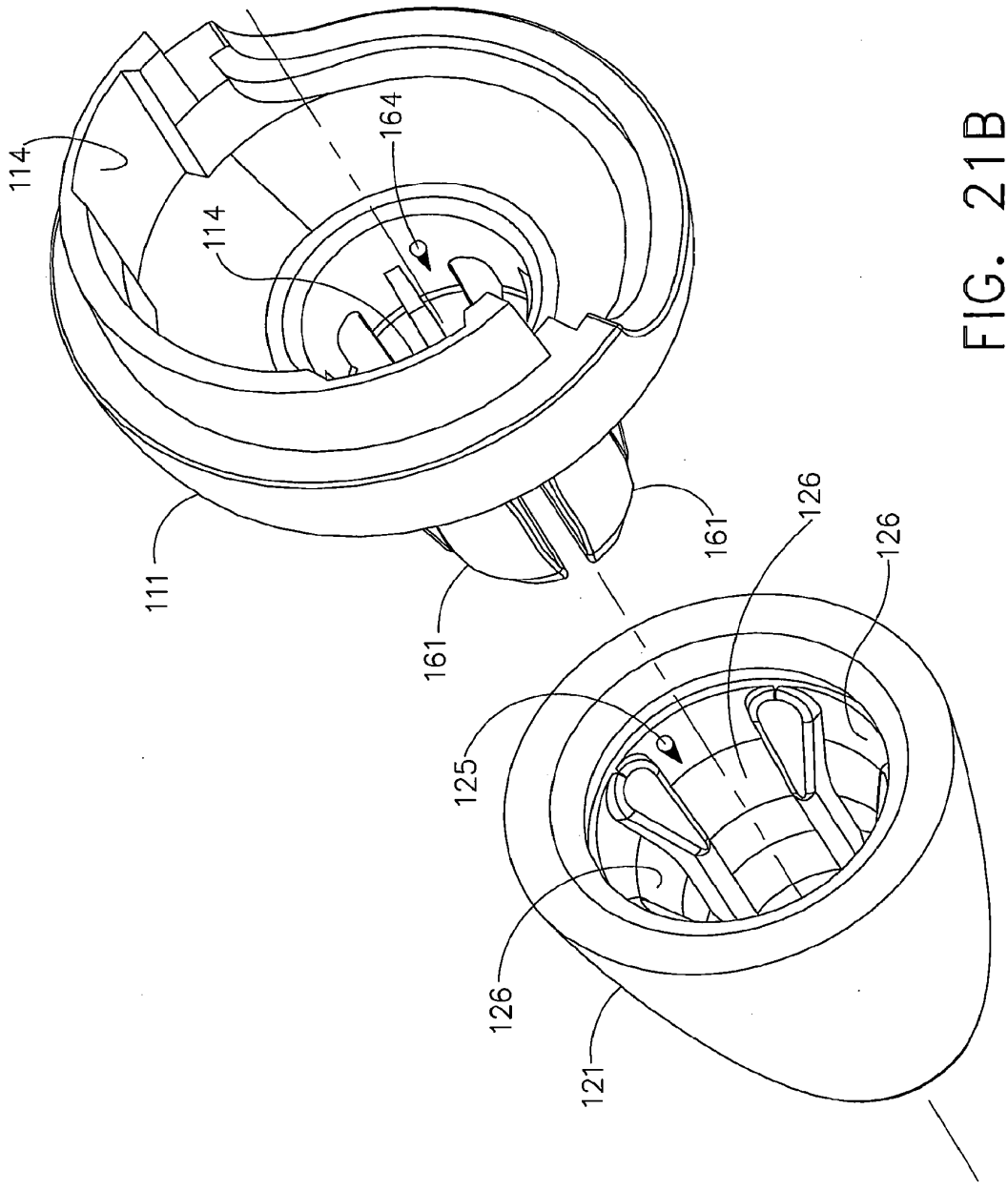

FIG. 21B

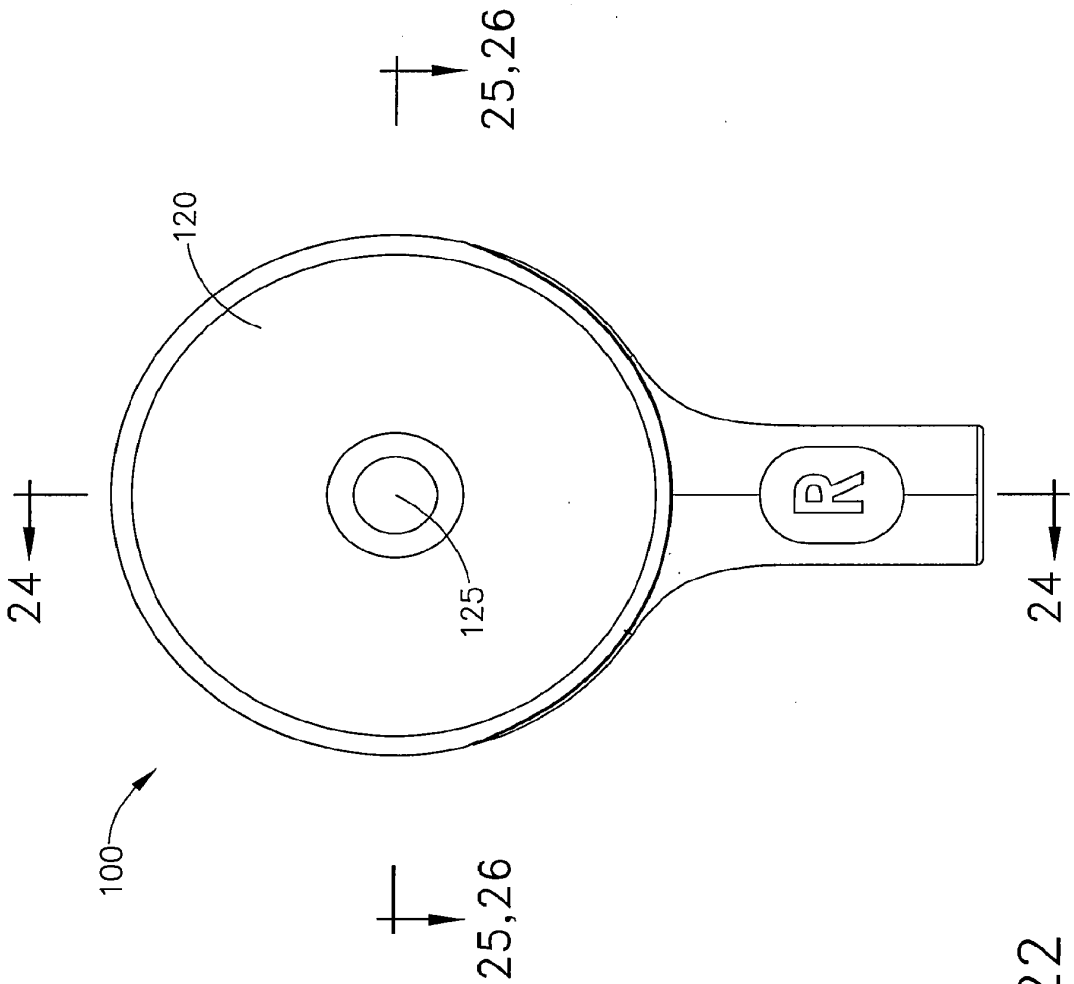

FIG. 22

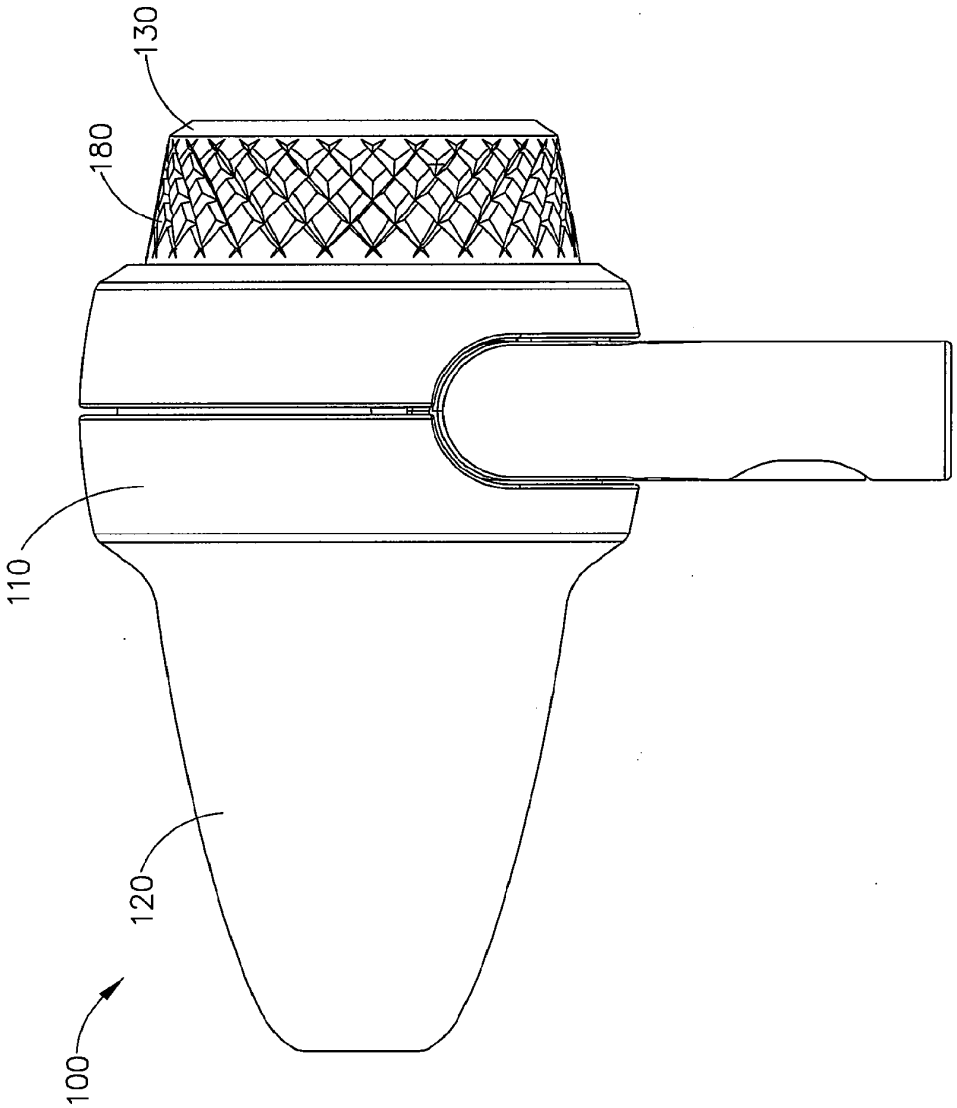

FIG. 23

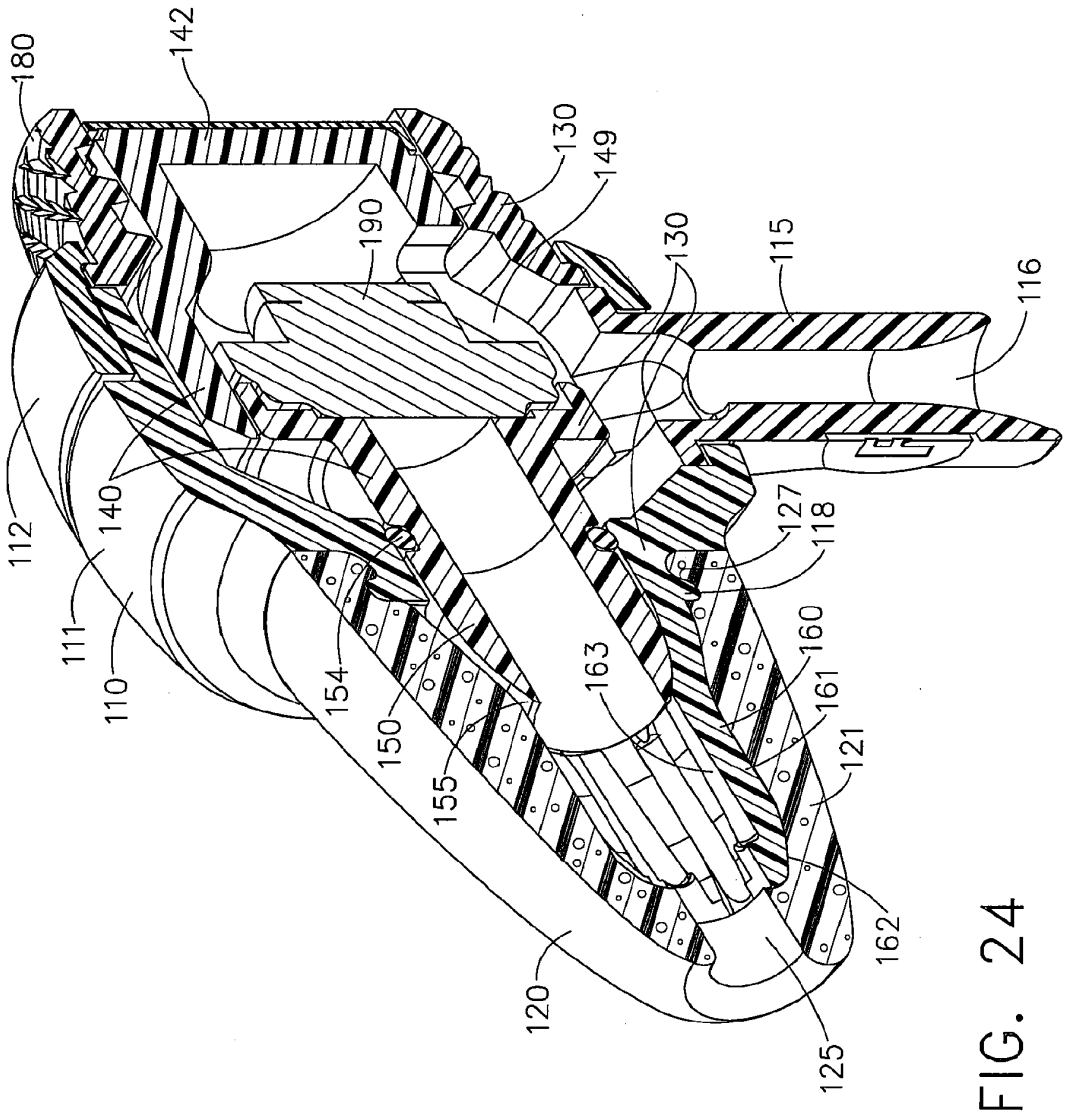
180
142
130
149
190
130
115
116
112
140
127
118
111
160
110
154
163
161
150
121
155
162
120
125

FIG. 24

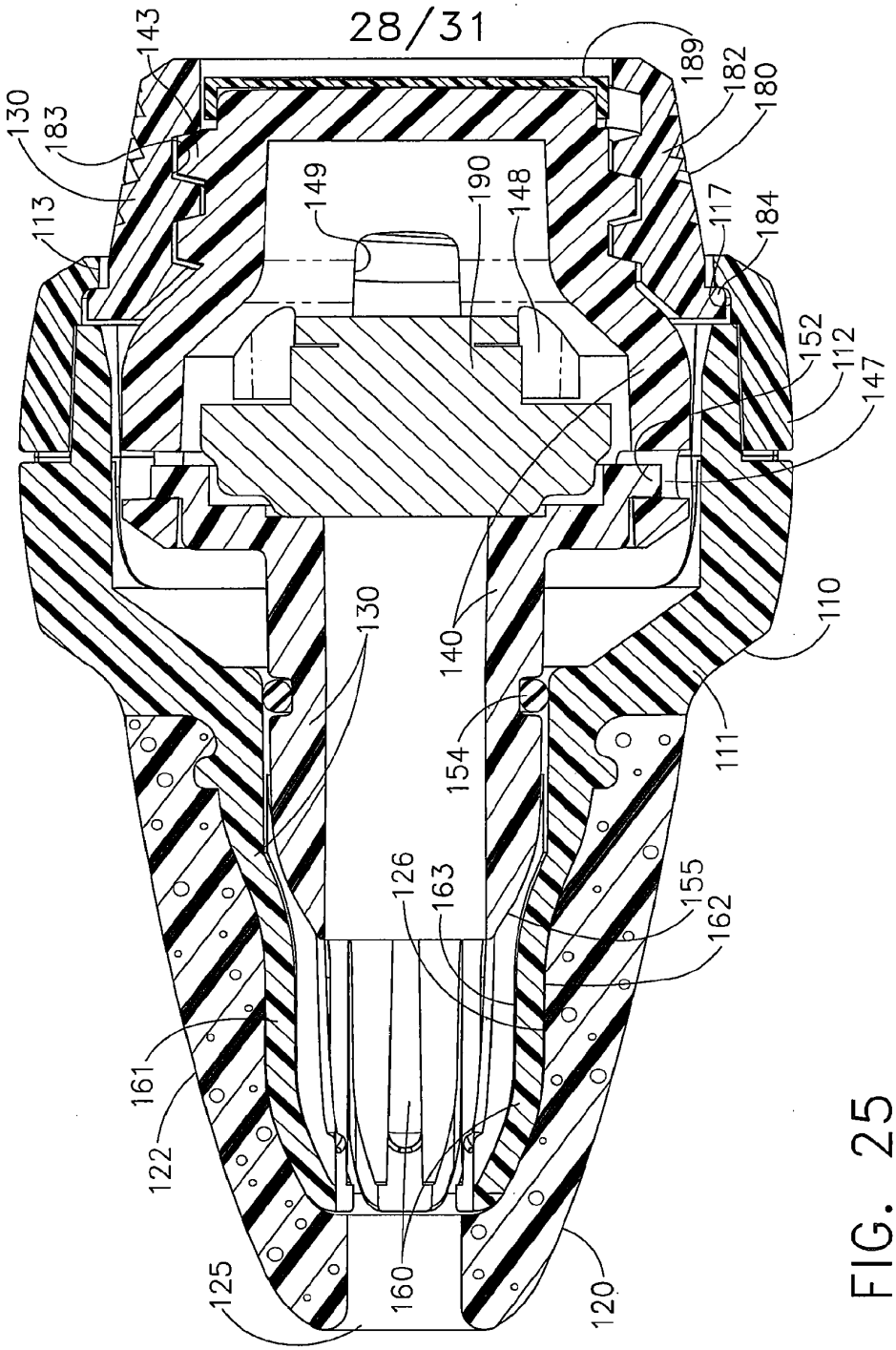
143
130
183
113
149
190
148
189
182
180
117
184
152
112
147
130
140
110
154
111
126
163
155
162
161
122
160
125
120

FIG. 25

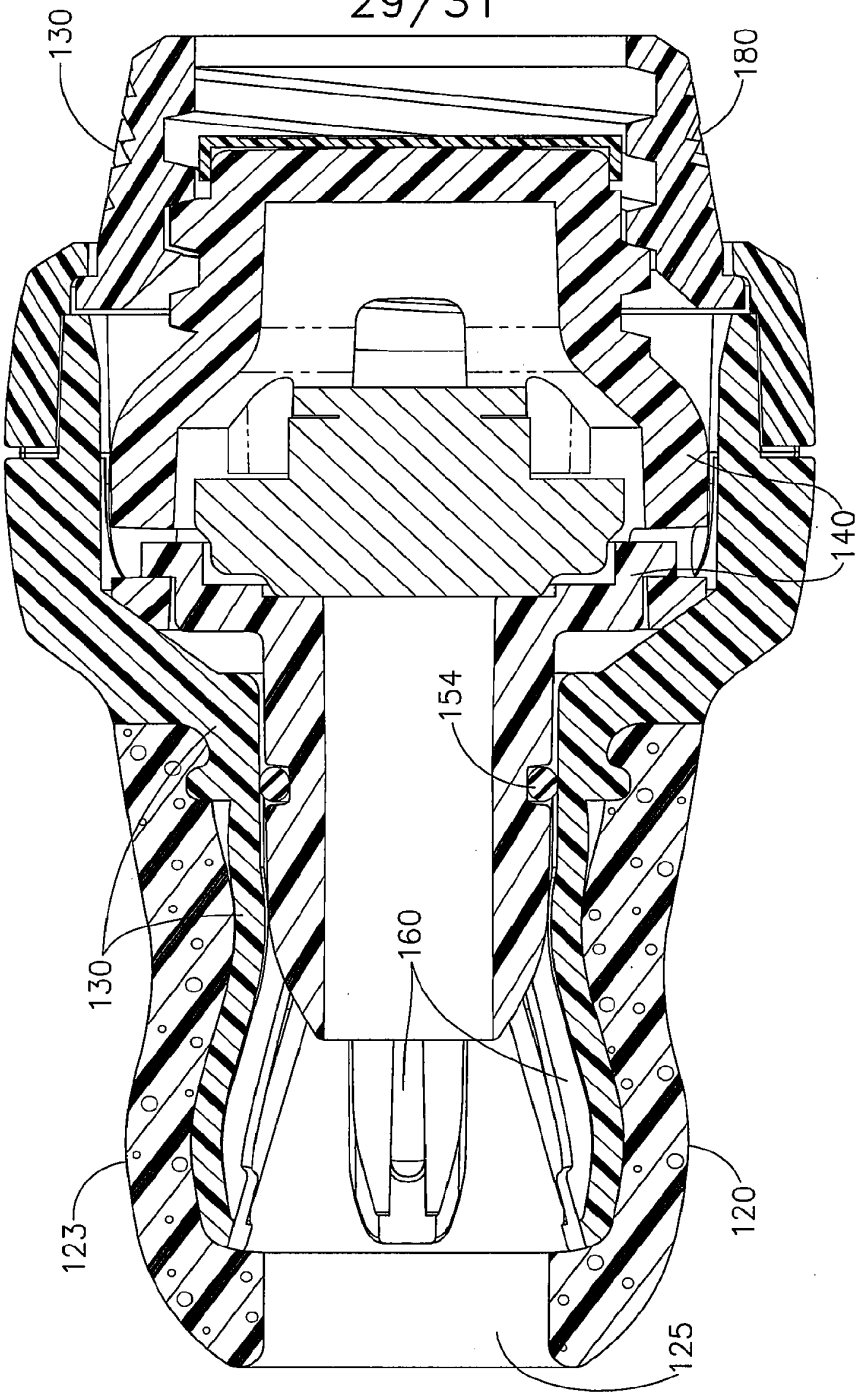

FIG. 26

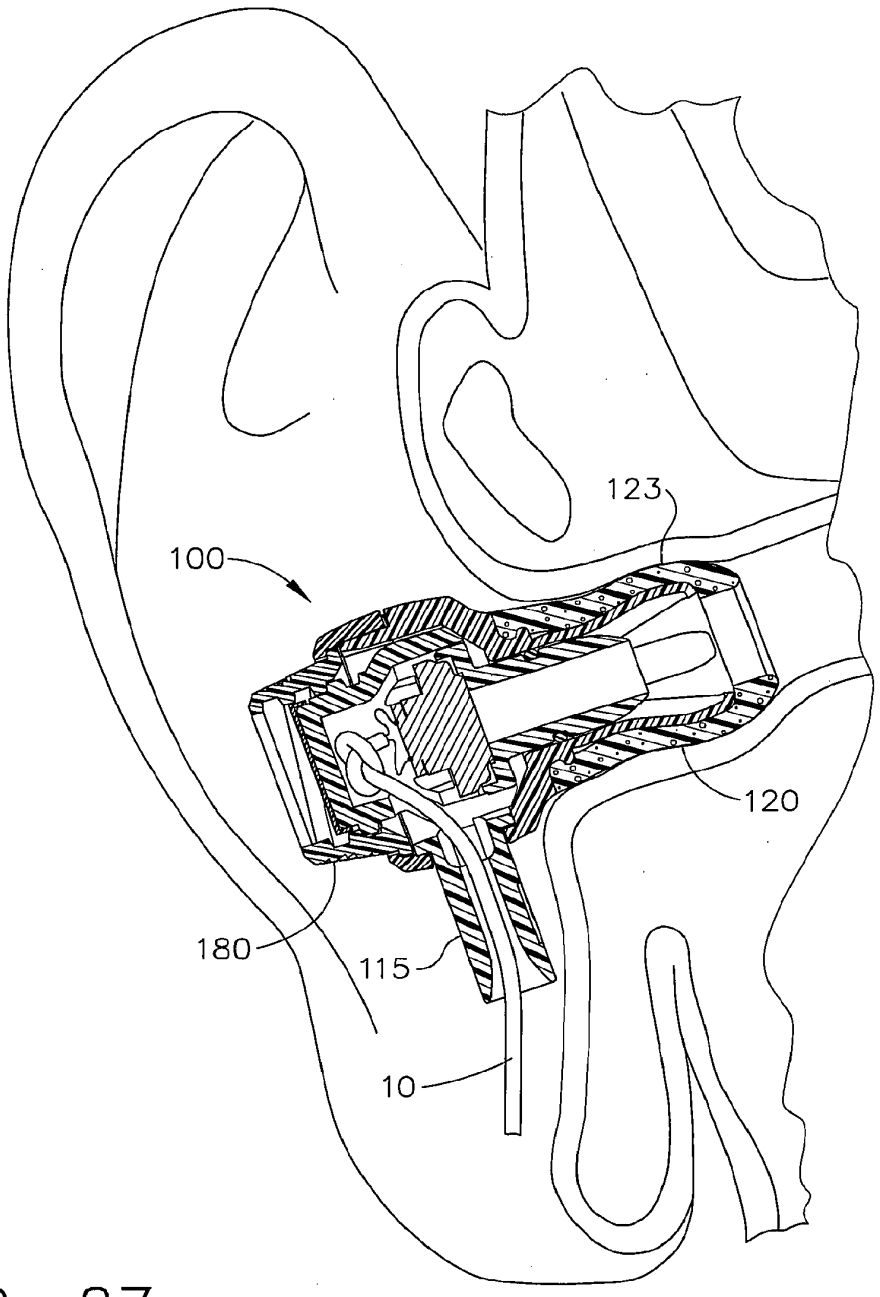

FIG. 27

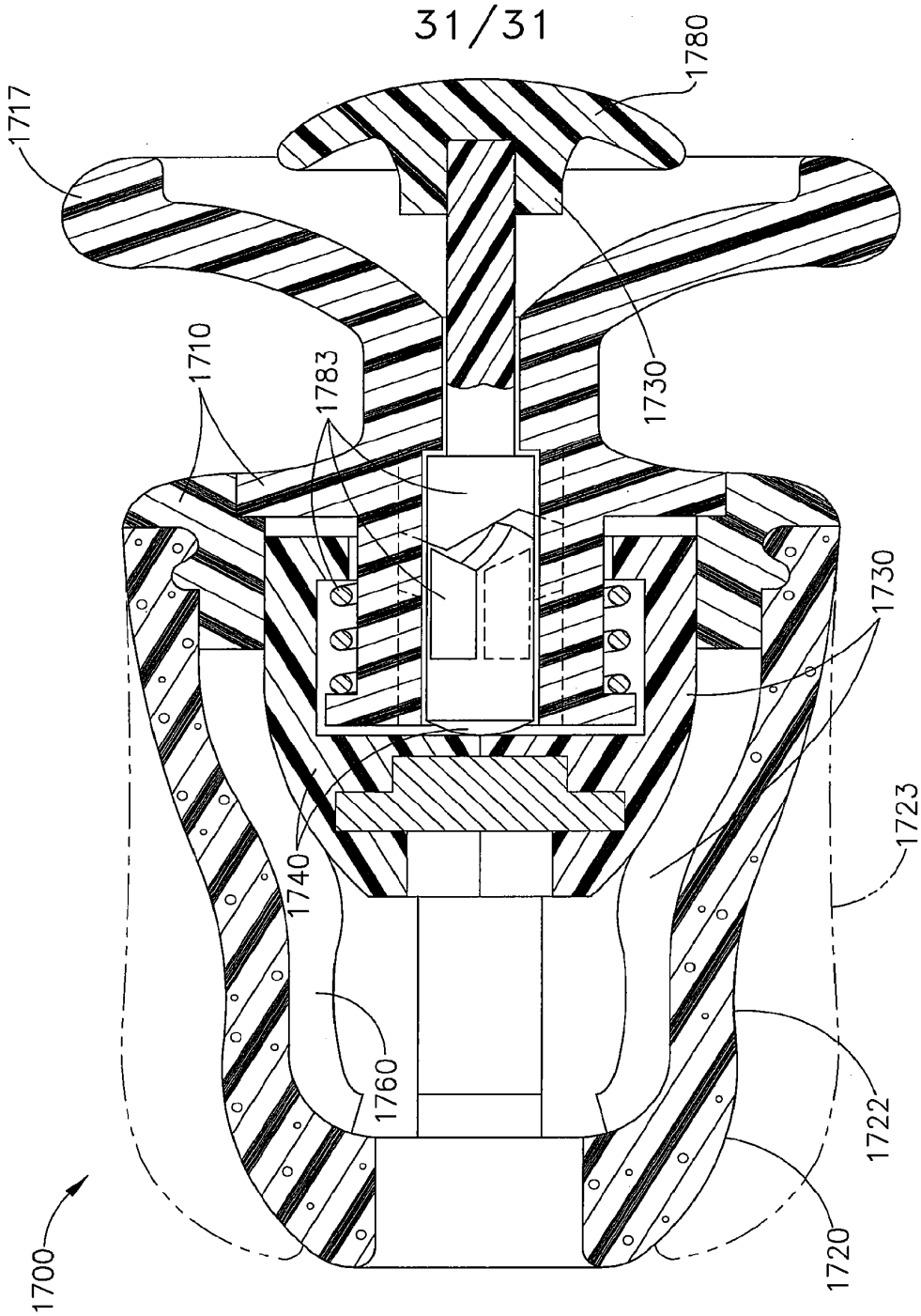

FIG. 28

INTERNATIONAL SEARCH REPORT

International application No.
PCT/US 08/88656

A. CLASSIFICATION OF SUBJECT MATTER
IPC(8) - H04R 25/00 (2009.01)
USPC - 381/380
According to International Patent Classification (IPC) or to both national classification and IPC

B. FIELDS SEARCHED

Minimum documentation searched (classification system followed by classification symbols)
USPC: 381/380

Documentation searched other than minimum documentation to the extent that such documents are included in the fields searched
USPC: 381/309, 370, 380 (keyword limited - see search terms)

Electronic data base consulted during the international search (name of data base and, where practicable, search terms used)
PubWEST (USPT, PGPB, EPAB, JPAB); Google Patents; Google
Search Terms Used: adjustable earplug; cantilever arm; actuator; dial; shape; transducer; cord; foam

C. DOCUMENTS CONSIDERED TO BE RELEVANT

Category*	Citation of document, with indication, where appropriate, of the relevant passages	Relevant to claim No.
X — Y	US 2004/0258263 A1 (SAXTON et al.) 23 December 2004 (23.12.2004), entire document, especially; para [0076], [0078], [0080], [0081], [0083]-[0087], [0093], [0095]	3-5, 8-12, 14, 15, 22, 23, 25, 26, 28 --- 1, 2, 6, 7, 13, 16-21,24,27
Y	US 7,182,087 B1 (MARSH) 27 February 2007 (27.02.2007), entire document, especially; col. 2, ln 3-26; col. 3, ln 44-48, 64 - col. 4, ln 29, 31-32; col. 5, ln 25-26	1, 2, 6, 7, 13, 21
Y	US 2007/0218962 A1 (TSAI) 20 September 2007 (20.09.2007), entire document, especially; para [0023], [0024]	16-20
Y	US 2006/0140426 A1 (BERG) 29 June 2006 (29.06.2006), entire document, especially; para [0021]	24, 27
Y	US 2002/0090099 A1 (HWANG) 11 July 2002 (11.07.2002), entire document, especially; para [0015]	17

☐ Further documents are listed in the continuation of Box C. ☐

* Special categories of cited documents:
"A" document defining the general state of the art which is not considered to be of particular relevance
"E" earlier application or patent but published on or after the international filing date
"L" document which may throw doubts on priority claim(s) or which is cited to establish the publication date of another citation or other special reason (as specified)
"O" document referring to an oral disclosure, use, exhibition or other means
"P" document published prior to the international filing date but later than the priority date claimed
"T" later document published after the international filing date or priority date and not in conflict with the application but cited to understand the principle or theory underlying the invention
"X" document of particular relevance; the claimed invention cannot be considered novel or cannot be considered to involve an inventive step when the document is taken alone
"Y" document of particular relevance; the claimed invention cannot be considered to involve an inventive step when the document is combined with one or more other such documents, such combination being obvious to a person skilled in the art
"&" document member of the same patent family

Date of the actual completion of the international search	Date of mailing of the international search report
04 February 2009 (04.02.2009)	17 FEB 2009
Name and mailing address of the ISA/US Mail Stop PCT, Attn: ISA/US, Commissioner for Patents P.O. Box 1450, Alexandria, Virginia 22313-1450 Facsimile No. 571-273-3201	Authorized officer: Lee W. Young PCT Helpdesk: 571-272-4300 PCT OSP: 571-272-7774

Form PCT/ISA/210 (second sheet) (April 2007)

PATENT COOPERATION TREATY

PCT

INTERNATIONAL SEARCH REPORT

(PCT Article 18 and Rules 43 and 44)

Applicant's or agent's file reference 080188PCT	FOR FURTHER ACTION	see Form PCT/ISA/220 as well as, where applicable, item 5 below.
International application No. PCT/US 09/39754	International filing date *(day/month/year)* 07 April 2009 (07.04.2009)	(Earliest) Priority Date *(day/month/year)* 07 April 2008 (07.04.2008)
Applicant Koss Corporation		

This international search report has been prepared by this International Searching Authority and is transmitted to the applicant according to Article 18. A copy is being transmitted to the International Bureau.

This international search report consists of a total of 2 sheets.

☐ It is also accompanied by a copy of each prior art document cited in this report.

1. **Basis of the report**

a. With regard to the **language**, the international search was carried out on the basis of:

☒ the international application in the language in which it was filed.

☐ a translation of the international application into _____ which is the language of a translation furnished for the purposes of international search (Rules 12.3(a) and 23.1(b)).

b. ☐ This international search report has been established taking into account the **rectification of an obvious mistake** authorized by or notified to this Authority under Rule 91 (Rule 43.6*bis*(a)).

c. ☐ With regard to any **nucleotide and/or amino acid sequence** disclosed in the international application, see Box No. I.

2. ☐ **Certain claims were found unsearchable** (see Box No. II).

3. ☐ **Unity of invention is lacking** (see Box No. III).

4. With regard to the **title**,

☒ the text is approved as submitted by the applicant.

☐ the text has been established by this Authority to read as follows:

5. With regard to the **abstract**,

☒ the text is approved as submitted by the applicant.

☐ the text has been established, according to Rule 38.2(b), by this Authority as it appears in Box No. IV. The applicant may, within one month from the date of mailing of this international search report, submit comments to this Authority.

6. With regard to the **drawings**,

a. the figure of the **drawings** to be published with the abstract is Figure No. 2D

☒ as suggested by the applicant.

☐ as selected by this Authority, because the applicant failed to suggest a figure.

☐ as selected by this Authority, because this figure better characterizes the invention.

b. ☐ none of the figures is to be published with the abstract.

Form PCT/ISA/210 (first sheet) (April 2007)

INTERNATIONAL SEARCH REPORT

International application No.
PCT/US 09/39754

A. CLASSIFICATION OF SUBJECT MATTER
IPC(8) - H04R 1/02 (2009.01)
USPC - 381/330
According to International Patent Classification (IPC) or to both national classification and IPC

B. FIELDS SEARCHED

Minimum documentation searched (classification system followed by classification symbols)
USPC: 381/330

Documentation searched other than minimum documentation to the extent that such documents are included in the fields searched
USPC: 381/309, 330; 340/505; 709/250 (see terms below)

Electronic data base consulted during the international search (name of data base and, where practicable, search terms used)
PubWEST(PGPB,USPT,USOC,EPAB,JPAB); GOOGLE SCHOLAR
Search terms: ad hoc wireless network, infrastructure wireless network, earphone, headset, digital audio, antenna, transceiver, server, streaming, web page

C. DOCUMENTS CONSIDERED TO BE RELEVANT

Category*	Citation of document, with indication, where appropriate, of the relevant passages	Relevant to claim No.
X	US 2007/0116316 A1 (Goldberg) 24 May 2007 (24.05.2007), entire document, especially; para [0095]-[0194], [0222], [0262]-[0277], [0303]-[0328], [0350]-[0352], Fig. 1, 13, 12, 29	1 - 47
A	US 2008/0062939 A1 (Horn et al.) 13 March 2008 (13.03.2008), entire document	1 - 47
A	US 2005/0196233 A1 (Manchester et al.) 08 September 2005 (08.09.2005), entire document	1 - 47

☐ Further documents are listed in the continuation of Box C. ☐

* Special categories of cited documents:
"A" document defining the general state of the art which is not considered to be of particular relevance
"E" earlier application or patent but published on or after the international filing date
"L" document which may throw doubts on priority claim(s) or which is cited to establish the publication date of another citation or other special reason (as specified)
"O" document referring to an oral disclosure, use, exhibition or other means
"P" document published prior to the international filing date but later than the priority date claimed
"T" later document published after the international filing date or priority date and not in conflict with the application but cited to understand the principle or theory underlying the invention
"X" document of particular relevance; the claimed invention cannot be considered novel or cannot be considered to involve an inventive step when the document is taken alone
"Y" document of particular relevance; the claimed invention cannot be considered to involve an inventive step when the document is combined with one or more other such documents, such combination being obvious to a person skilled in the art
"&" document member of the same patent family

Date of the actual completion of the international search	Date of mailing of the international search report
02 June 2009 (02.06.2009)	11 JUN 2009
Name and mailing address of the ISA/US Mail Stop PCT, Attn: ISA/US, Commissioner for Patents P.O. Box 1450, Alexandria, Virginia 22313-1450 Facsimile No. 571-273-3201	Authorized officer: Lee W. Young PCT Helpdesk: 571-272-4300 PCT OSP: 571-272-7774

Form PCT/ISA/210 (second sheet) (April 2007)

PATENT COOPERATION TREATY

From the
INTERNATIONAL PRELIMINARY EXAMINING AUTHORITY

To:
MARK G. KNEDEISEN
K&L GATES LLP
K&L GATES CENTER
210 SIXTH AVENUE
PITTSBURGH, PA 15222-2613

PCT

NOTIFICATION OF TRANSMITTAL OF INTERNATIONAL PRELIMINARY EXAMINATION REPORT

(PCT Rule 71.1)

Date of Mailing *(day/month/year)*	28 OCT 2010
Applicant's or agent's file reference 080188PCT	**IMPORTANT NOTIFICATION**

International application No.	International filing date *(day/month/year)*	Priority date *(day/month/year)*
PCT/US09/39754	07 April 2009 (07.04.2009)	07 April 2008 (07.04.2008)

Applicant

KOSS CORPORATION

1. The applicant is hereby notified that this International Preliminary Examining Authority transmits herewith the international preliminary examination report and its annexes, if any, established on the international application.

2. A copy of the report and its annexes, if any, is being transmitted to the International Bureau for communication to all the elected Offices.

3. Where required by any of the elected Offices, the International Bureau will prepare an English translation of the report (but not of any annexes) and will transmit such translation to those Offices.

4. **REMINDER**

The applicant must enter the national phase before each elected Office by performing certain acts (filing translations and paying national fees) within 30 months from the priority date (or later in some Offices)(Article 39(1))(see also the reminder sent by the International Bureau with Form PCT/IB/301).

Where a translation of the international application must be furnished to an elected Office, that translation must contain a translation of any annexes to the international preliminary examination report. It is the applicant's responsibility to prepare and furnish such translation directly to each elected Office concerned.

For further details on the applicable time limits and requirements of the elected Offices, see Volume II of the PCT Applicant's Guide.

Name and mailing address of the IPEA/US	Authorized officer
Mail Stop PCT, Attn: IPEA/ US Commissioner for Patents P.O. Box 1450 Alexandria, Virginia 22313-1450	Charles Appiah
Facsimile No.	Telephone No. 571-273-8300

Form PCT/IPEA/416 (July 1992)

PATENT COOPERATION TREATY

PCT

INTERNATIONAL PRELIMINARY EXAMINATION REPORT

(PCT Article 36 and Rule 70)

Applicant's or agent's file reference 080188PCT	**FOR FURTHER ACTION**	See Notification of Transmittal of International Preliminary Examination Report (Form PCT/IPEA/416)
International application No. PCT/US09/39754	International filing date *(day/month/year)* 07 April 2009 (07.04.2009)	Priority date *(day/month/year)* 07 April 2008 (07.04.2008)
International Patent Classification (IPC) or national classification and IPC IPC: **H04R 1/02**(2006.01) USPC: 455/3.06,575.1		
Applicant KOSS CORPORATION		

1. This international preliminary examination report has been prepared by this International Preliminary Examining Authority and is transmitted to the applicant according to Article 36.

2. This REPORT consists of a total of 6 sheets, including this cover sheet.

   ☐ This report is also accompanied by ANNEXES, i.e., sheets of the description, claims and/or drawings which have been amended and are the basis for this report and/or sheets containing rectifications made before this Authority (see Rule 70.16 and Section 607 of the Administrative Instructions under the PCT).

   These annexes consist of a total of ___ sheets.

3. This report contains indications relating to the following items:

   - I ☒ Basis of the report
   - II ☐ Priority
   - III ☐ Non-establishment of report with regard to novelty, inventive step and industrial applicability
   - IV ☐ Lack of unity of invention
   - V ☒ Reasoned statement under Article 35(2) with regard to novelty, inventive step or industrial applicability; citations and explanations supporting such statement
   - VI ☐ Certain documents cited
   - VII ☐ Certain defects in the international application
   - VIII ☐ Certain observations on the international application

Date of submission of the demand	Date of completion of this report
03 December 2009 (03.12.2009)	21 October 2010 (21.10.2010)
Name and mailing address of the IPEA/US Mail Stop PCT, Attn: IPEA/ US Commissioner for Patents P.O. Box 1450 Alexandria, Virginia 22313-1450 Facsimile No.	Authorized officer Charles Appiah Telephone No. 571-273-8300

Form PCT/IPEA/409 (cover sheet)(July 1998)

INTERNATIONAL PRELIMINARY EXAMINATION REPORT

International application No.
PCT/US09/39754

I. Basis of the report

1. With regard to the **elements** of the international application:*

☒ the international application as originally filed.

☐ the description:
pages 22-28 as originally filed
pages None, filed with the demand
pages None, filed with the letter of _____.

☒ the claims:
pages 1-33, as originally filed
pages None, as amended (together with any statement) under Article 19
pages None, filed with the demand
pages None, filed with the letter of _____.

☒ the drawings:
pages 1-16, as originally filed
pages None, filed with the demand
pages Nobe, filed with the letter of _____.

☒ the sequence listing part of the description:
pages None, as originally filed
pages None, filed with the demand
pages None, filed with the letter of _____.

2. With regard to the **language**, all the elements marked above were available or furnished to this Authority in the language in which the international application was filed, unless otherwise indicated under this item.
These elements were available or furnished to this Authority in the following language _____ which is:

☐ the language of a translation furnished for the purposes of international search (under Rule23.1(b)).

☐ the language of publication of the international application (under Rule 48.3(b)).

☐ the language of the translation furnished for the purposes of international preliminary examination(under Rules 55.2 and/or 55.3).

3. With regard to any **nucleotide and/or amino acid sequence** disclosed in the international application, the international preliminary examination was carried out on the basis of the sequence listing:

☐ contained in the international application in printed form.

☐ filed together with the international application in computer readable form.

☐ furnished subsequently to this Authority in written form.

☐ furnished subsequently to this Authority in computer readable form.

☐ The statement that the subsequently furnished written sequence listing does not go beyond the disclosure in the international application as filed has been furnished.

☐ The statement that the information recorded in computer readable form is identical to the written sequence listing has been furnished.

4. ☐ The amendments have resulted in the cancellation of:

☐ the description, pages _____

☐ the claims, Nos. _____

☐ the drawings, sheets/~~fig~~ _____

5. ☐ This report has been established as if (some of) the amendments had not been made, since they have been considered to go beyond the disclosure as filed, as indicated in the Supplemental Box (Rule 70.2(c)).**

** Replacement sheets which have been furnished to the receiving Office in response to an invitation under Article 14 are referred to in this report as "originally filed" and are not annexed to this report since they do not contain amendments (Rules 70.16 and 70.17).*
*** Any replacement sheet containing such amendments must be referred to under item 1 and annexed to this report.*

Form PCT/IPEA/409 (Box I) (July 1998)

INTERNATIONAL PRELIMINARY EXAMINATION REPORT

International application No.
PCT/US09/39754

V. Reasoned statement under Rule 66.2(a)(ii) with regard to novelty, inventive step or industrial applicability; citations and explanations supporting such statement

1. STATEMENT

Novelty (N)	Claims 1-33	YES
	Claims NONE	NO
Inventive Step (IS)	Claims 1-33	YES
	Claims NONE	NO
Industrial Applicability (IA)	Claims 1-33	YES
	Claims NONE	NO

2. CITATIONS AND EXPLANATIONS
Please See Continuation Sheet

Form PCT/IPEA/409 (Box V) (July 1998)

INTERNATIONAL PRELIMINARY EXAMINATION REPORT

International application No.
PCT/US09/39754

Supplemental Box
(To be used when the space in any of the preceding boxes is not sufficient)

Claims 1-33 meet novelty under PCT Article 33(2) .

Claim 1 An earphone comprising:
a body, wherein the body comprises:
at least one acoustic transducer for converting an analog electrical signal to sound; an antenna; and a transceiver circuit in communication with the at least one acoustic transducer and the
antenna, wherein the transceiver circuit is for receiving and transmitting wireless signals
via the antenna, and wherein the transceiver circuit is for out-putting the analog electrical
signal to the at least one acoustic transducer, and wherein the wireless transceiver circuit
comprises firmware, which when executed by the transceiver circuit, causes the
transceiver circuit to:
receive digital audio wirelessly from a data source via an ad hoe wireless network when the data source is in wireless communication range with the earphone via the ad hoc wireless network;
transmit data via the ad hoe wireless network to the data source regarding one or more infrastructure wireless networks detected by the transceiver circuit when the earphone and the data source are communicating via the ad hoe wireless network, wherein the data comprises identification data and signal strength data for the one or more infrastructure wireless networks; and
when the data source is not in wireless communication range with the earphone via the ad hoe wireless network, transition automatically to receive digital audio via an infrastructure wireless network.

2. The earphone of claim 1, wherein the data source comprises a digital audio player. 3. The earphone of claim 1, wherein the transceiver circuit comprises: a wireless communication module; a processor unit in commaunication with the wireless communication module; a non-volatile memory unit in communication with the processor unit; and a volatile memory unit in communication with the processor unit.

4 The earphone of claim 3, wherein the wireless communication module comprises a Wi-Fi communication module.
5.The earphone of claim 1, wherein the infrastructure wireless network comprises a WLAN.

6 The earphone of claim 1, wherein the transceiver ch'cuit is for receiving digital audio from the data source via the infrastructure wireless network when the data source is not in wireless communication range with the earphone via the ad hoe wireless network.

7. The earphone of claim 6, wherein the infrastructure wireless network is a pre-set infrastructure wireless network that the data source transitions to when the data source is not in wireless communication range with the earphone via the ad hoe wireless network and when the pre-set infrastructure wireless network is in range of both the earphone and the data source.

8.The earphone of claim 1, wherein the firmware, when executed by the transceiver circuit, causes the transceiver circuit of the earphone to connect to a host server via a second infrastructure wireless network when (1) the data source is not in wireless communication range with the earphone via the ad hoe wireless network and (2) the data source and the earphone are not in wireless communication via the pre-set infrastructure wireless network.

9.The earphone of claim 1, wherein the firmware, when executed by the transceiver circuit, causes the transceiver circuit of the earphone to connect to a host server via the infrastructure wireless network when the data source is not in wireless communication range with the earphone via the ad hoe wireless network.
10. The earphone of claim 9, wherein the earphone is for receiving streaming digital audio from the host server via the infrastructure wireless network.
11. The earphone of claim 9, wherein the earphone is for receiving a first network address for a first streaming digital audio content server from the host server via the infrastructure wireless network.

12. The earphone of claim 11, wherein the earphone comprises a user control that, when activated, causes the earphone to submit an electronic request via the infrastructure wireless network to the host server for a second network address for a second streaming digital audio content server.

13. The earphone of claim 12, wherein the user control comprises a button.

INTERNATIONAL PRELIMINARY EXAMINATION REPORT

International application No.
PCT/US09/39754

Supplemental Box
(To be used when the space in any of the preceding boxes is not sufficient)

14. A system comprising: a data source for wirelessly transmitting streaming digital audio; and a wireless earphone that comprises: at least one acoustic transducer for converting an analog electrical signal to sound; an antenna; and a transceiver circuit in communication with the at least one acoustic transducer and the antenna, wherein the transceiver circuit is for receiving and transmitting wireless signals via the antenna, and wherein the transceiver circuit is for outputting the analog electrical signal to the at least one acoustic transducer, and wherein the wireless transceiver circuit comprises firmware, which when executed by the transceiver circuit, causes the transceiver circuit to:
receive the streaming digital audio wirelessly from the data source via an ad hoe wireless network when the data source is in wireless communication range with the earphone via the ad hoe wireless network;
transmit data via the ad hoc wireless network to the data source regarding one or more irastructure wireless networks detected by the transceiver circuit when the earphone and the data source are communicating via the ad hoc wireless network, wherein the data comprises identification data and signal strength data for the one or more infrastruc~re wireless networks; and
when the data source is not in wireless communication range with the earphone via the ad hoc wireless network, transition automatically to receive streaming digital audio via an infrastructure wireless network.

15. The system of claim 14, wherein the data source comprises a digital audio player.

16. The system of claim 14, further comprising a host server that is in communication with the wireless earphone via the infrastructure wireless network.

17. The system of claim 16, wherein the firmware of the transceiver circuit of the wireless earphone, when executed by the transceiver circuit, causes the transceiver circuit of the earphone to connect to the host server via the infrastructure wireless network when the data source is not in wireless communication range with the earphone via the ad hoc wireless network.

18. The system of claim 16, wherein the host server is for streaming digital audio to the earphone via the infrastructure wireless network.

19. The system of claim 16, wherein the host server is for transmitting a first network address for a fLrst streaming digital audio content server to the earphone via the in~astructure wireless network.

20. The system of claim 19, wherein the earphone comprises a user control that, when activated, causes the earphone to submit an electronic request via the infrastructure wireless network to the host server for a second network address for a second streaming digital audio content server.

21. The earphone of claim 20, wherein the user control comprises a button.

22. The system of claim 17, further comprising a web page for the wireless earphone through which a user is capable of configuring one or more settings for the wireless earphone.

23. The system of claim 14, wherein the infrastruc~tre wireless network comprises a WLAN. 24. The system of claim 14, wherein the firmware, when executed by the infrastructure wireless network is a pre-set infrastructure wireless network that the data source transitions to when the data source is not in wireless communication range with the earphone via the ad hoe wireless network and when the pre-set infrastructure wireless network is in range, of both the earphone and the data source.

25. The system of claim 14, wherein the firmware, when executed by the transceiver circuit, causes the transceiver circuit of the earphone to connect to a host server via a second infrastructure wireless network when (1) the data source is not in wireless communication range with the earphone via the ad hoe wireless network and (2) the data source and the earphone are not in wireless communication via the pre-set infrastructure wireless network.

26. The system of claim 25, wherein the host server is for streaming digital audio to the earphone via the infrastructure wireless network.

27. The system of claim 25, wherein the host sever is for transmitting a first network address fora first streaming digital audio content server to the earphone via the infrastructure wireless network.

28. The system of claim 27, wherein the earphone comprises a user control that, when activated, causes the earphone to submit an electronic request via the infrastructure wireless network to the host server for a second network address for a second streaming digital audio content server.

INTERNATIONAL PRELIMINARY EXAMINATION REPORT

International application No.
PCT/US09/39754

Supplemental Box
(To be used when the space in any of the preceding boxes is not sufficient)

29. The earphone of claim 28, wherein the user control comprises a button. 30. A method comprising: receiving, by a wireless earphone, via an ad hoe wireless network, digital audio from a data source when the data source is in wireless communication with the earphone via the ad hoe wireless network; transmitting data via the ad hoe wireless network to the data source regarding one or more infrastructure wireless networks detected by the transceiver circuit when the earphone and the data source are communicating via the ad hoe wireless network, wherein the data comprises identification data and signal strength data for the one or more infrastructure wireless networks; converting, by the wireless earphone, the digital audio to sound; and when the data source is not in wireless communication with the earphone, transitioning automatically, by the earphone, to receive digital audio via an infrastructure wireless network.

31. The method of claim 30, wherein transitioning automatically by the earphone to receive digital audio via an infrastructure wireless network comprises transitioning automatically to receive digital audio from the data source via an infrastructure wireless network when the data source is not in wireless communication range with the earphone via the ad hoe wireless network.

32. The method of claim 30, wherein transitioning automatically by the earphone to receive digital audio via an irffxastructure wireless network comprises transitioning automatically to receive digital audio from a host sever via the infrastructure wireless network when the data source is not in wireless communication range with the earphone via the ad hoc wireless network

33. The method of claim 30, wherein transitioning automatically by the earphone to receive digital audio via an infrastructure wireless network comprises: receiving, by the wireless earphone via the infastructure wireless network, from a host server connected to the infrastructure wireless network, a network address for a streaming digital audio content server; and connecting, by the wireless carphone, to the streaming digital audio content server using the network address received from the host server.

V. 2. Citations and Explanations:

PATENT COOPERATION TREATY

From the
INTERNATIONAL PRELIMINARY EXAMINING AUTHORITY

To:
MARK G. KNEDEISEN
K&L GATES LLP
K&L GATES CENTER
210 SIXTH AVENUE
PITTSBURGH, PA 15222-2613

PCT

NOTIFICATION OF TRANSMITTAL OF INTERNATIONAL PRELIMINARY EXAMINATION REPORT

(PCT Rule 71.1)

Date of Mailing (*day/month/year*)	
Applicant's or agent's file reference 080188PCT	**IMPORTANT NOTIFICATION**

International application No.	International filing date *(day/month/year)*	Priority date (*day/month/year*)
PCT/US09/39754	07 April 2009 (07.04.2009)	07 April 2008 (07.04.2008)

Applicant

KOSS CORPORATION

1. The applicant is hereby notified that this International Preliminary Examining Authority transmits herewith the international preliminary examination report and its annexes, if any, established on the international application.

2. A copy of the report and its annexes, if any, is being transmitted to the International Bureau for communication to all the elected Offices.

3. Where required by any of the elected Offices, the International Bureau will prepare an English translation of the report (but not of any annexes) and will transmit such translation to those Offices.

4. **REMINDER**

The applicant must enter the national phase before each elected Office by performing certain acts (filing translations and paying national fees) within 30 months from the priority date (or later in some Offices)(Article 39(1))(see also the reminder sent by the International Bureau with Form PCT/IB/301).

Where a translation of the international application must be furnished to an elected Office, that translation must contain a translation of any annexes to the international preliminary examination report. It is the applicant's responsibility to prepare and furnish such translation directly to each elected Office concerned.

For further details on the applicable time limits and requirements of the elected Offices, see Volume II of the PCT Applicant's Guide.

Name and mailing address of the IPEA/US	Authorized officer
Mail Stop PCT, Attn: IPEA/ US Commissioner for Patents P.O. Box 1450 Alexandria, Virginia 22313-1450	Charles Appiah Telephone No. 571-273-8300
Facsimile No.	

Form PCT/IPEA/416 (July 1992)

PATENT COOPERATION TREATY

From the
INTERNATIONAL SEARCHING AUTHORITY

To:
Mark G. Knedeisen
K&L GATES LLP
HENRY W. OLIVER BUILDING
535 SMITHFIELD STREET
PITTSBURGH, PA 15222-2312

PCT

WRITTEN OPINION OF THE
INTERNATIONAL SEARCHING AUTHORITY

(PCT Rule 43*bis*.1)

Date of mailing *(day/month/year)*	11 JUN 2009
Applicant's or agent's file reference: 080188PCT	FOR FURTHER ACTION: See paragraph 2 below

International application No.	International filing date *(day/month/year)*	Priority date *(day/month/year)*
PCT/US 09/39754	07 April 2009 (07.04.2009)	07 April 2008 (07.04.2008)

International Patent Classification (IPC) or both national classification and IPC
IPC(8) - H04R 1/02 (2009.01)
USPC - 381/330

Applicant: Koss Corporation

1. This opinion contains indications relating to the following items:

- [x] Box No. I Basis of the opinion
- [ ] Box No. II Priority
- [ ] Box No. III Non-establishment of opinion with regard to novelty, inventive step and industrial applicability
- [ ] Box No. IV Lack of unity of invention
- [x] Box No. V Reasoned statement under Rule 43*bis*.1(a)(i) with regard to novelty, inventive step or industrial applicability; citations and explanations supporting such statement
- [ ] Box No. VI Certain documents cited
- [ ] Box No. VII Certain defects in the international application
- [ ] Box No. VIII Certain observations on the international application

2. **FURTHER ACTION**

If a demand for international preliminary examination is made, this opinion will be considered to be a written opinion of the International Preliminary Examining Authority ("IPEA") except that this does not apply where the applicant chooses an Authority other than this one to be the IPEA and the chosen IPEA has notified the International Bureau under Rule 66.1*bis*(b) that written opinions of this International Searching Authority will not be so considered.

If this opinion is, as provided above, considered to be a written opinion of the IPEA, the applicant is invited to submit to the IPEA a written reply together, where appropriate, with amendments, before the expiration of 3 months from the date of mailing of Form PCT/ISA/220 or before the expiration of 22 months from the priority date, whichever expires later.

For further options, see Form PCT/ISA/220.

3. For further details, see notes to Form PCT/ISA/220.

Name and mailing address of the ISA/US	Date of completion of this opinion	Authorized officer:
Mail Stop PCT, Attn: ISA/US Commissioner for Patents P.O. Box 1450, Alexandria, Virginia 22313-1450 Facsimile No. 571-273-3201	05 June 2009 (05.06.2009)	Lee W. Young PCT Helpdesk: 571-272-4300 PCT OSP: 571-272-7774

Form PCT/ISA/237 (cover sheet) (April 2007)

WRITTEN OPINION OF THE INTERNATIONAL SEARCHING AUTHORITY

International application No.
PCT/US 09/39754

Box No. I Basis of this opinion

1. With regard to the **language**, this opinion has been established on the basis of:

   ☒ the international application in the language in which it was filed.

   ☐ a translation of the international application into _____ which is the language of a translation furnished for the purposes of international search (Rules 12.3(a) and 23.1(b)).

2. ☐ This opinion has been established taking into account the **rectification of an obvious mistake** authorized by or notified to this Authority under Rule 91 (Rule 43*bis*.1(a))

3. With regard to any **nucleotide and/or amino acid sequence** disclosed in the international application, this opinion has been established on the basis of:

   a. type of material

      ☐ a sequence listing

      ☐ table(s) related to the sequence listing

   b. format of material

      ☐ on paper

      ☐ in electronic form

   c. time of filing/furnishing

      ☐ contained in the international application as filed

      ☐ filed together with the international application in electronic form

      ☐ furnished subsequently to this Authority for the purposes of search

4. ☐ In addition, in the case that more than one version or copy of a sequence listing and/or table(s) relating thereto has been filed or furnished, the required statements that the information in the subsequent or additional copies is identical to that in the application as filed or does not go beyond the application as filed, as appropriate, were furnished.

5. Additional comments:

WRITTEN OPINION OF THE INTERNATIONAL SEARCHING AUTHORITY

International application No.
PCT/US 09/39754

Box No. V **Reasoned statement under Rule 43*bis*.1(a)(i) with regard to novelty, inventive step or industrial applicability; citations and explanations supporting such statement**

1. Statement

Novelty (N)	Claims	None.	YES
	Claims	1 - 47	NO
Inventive step (IS)	Claims	None.	YES
	Claims	1 - 47	NO
Industrial applicability (IA)	Claims	1 - 47	YES
	Claims	None.	NO

2. Citations and explanations:

Claims 1 - 47 lack novelty under PCT Article 33(2) as being anticipated by US 2007/0116316 A1 (Goldberg).

As per claim 1, Goldberg discloses an earphone (901, fig. 12c, being a wireless earphone, para [0161]-[0162]) comprising: a body (enclosure, para [0110]), wherein the body comprises: at least one acoustic transducer (sound transducers 260, fig. 1, para [0099] and [0122]) for converting an analog electrical signal to sound (para [0137]); an antenna (antennae supported by portable devices, para [0142]); and a transceiver circuit (transmitter/receiver 110, fig. 1, para [0178]) in communication with the at least one acoustic transducer (para [0134]) and the antenna (para [0142]), wherein the transceiver circuit is for receiving and transmitting wireless signals via the antenna (para [0142]), and wherein the transceiver circuit is for outputting the analog electrical signal to the at least one acoustic transducer (para [0134]), and wherein the wireless transceiver circuit comprises firmware (instructions that implement a variety of protocols, para [0141] and [0165]), which when executed by the transceiver circuit, causes the transceiver circuit to: receive digital audio wirelessly from a data source (e.g., audio player 130, fig. 1 and 12c, para [0096] and [0155]) via an ad hoc wireless network (peer-to-peer communications, para [0165]) when the data source is in wireless communication range with the earphone via the ad hoc wireless network (within a predetermined distance, para [0165]); and when the data source is not in wireless communication range with the earphone via the ad hoc wireless network (outside of the range, para [0194] and [0269]), transition automatically to receive digital audio via an infrastructure wireless network (fixed infrastructure, para [0165]).

As per claim 15, Goldberg discloses a data source (e.g., audio player 130, fig. 1 and 12c, para [0096] and [0155]) for wirelessly transmitting streaming digital audio (audio data streaming 1954, para [0165]); and a wireless earphone (earphone 901, fig. 12c, being a wireless earphone, para [0161]-[0162]) that comprises: at least one acoustic transducer (sound transducers 260, fig. 1, para [0099] and [0122]) for converting an analog electrical signal to sound (para [0137]); an antenna (antennae supported by portable devices, para [0142]); and a transceiver circuit (transmitter/receiver 110, fig. 1, para [0178]) in communication with the at least one acoustic transducer (para [0134]) and the antenna (para [0142]), wherein the transceiver circuit is for receiving and transmitting wireless signals via the antenna (para [0142]), and wherein the transceiver circuit is for outputting the analog electrical signal to the at least one acoustic transducer (para [0134]), and wherein the wireless transceiver circuit comprises firmware (instructions that implement a variety of protocols, para [0141] and [0165]), which when executed by the transceiver circuit, causes the transceiver circuit to: receive the streaming digital audio wirelessly from the data source via an ad hoc wireless network (peer-to-peer communications, para [0165]) when the data source is in wireless communication range with the earphone via the ad hoc wireless network (within a predetermined distance, para [0165]); and when the data source is not in wireless communication range with the earphone via the ad hoc wireless network (outside of the range, para [0194] and [0269]), transition automatically to receive streaming digital audio via an infrastructure wireless network (fixed infrastructure, para [0165]).

As per claims 32, Goldberg discloses a system comprising: a host server (broadcast unit 710, fig. 13, para [0262], e.g., Internet device 1706, fig. 29, being a computer hosting a database, para [0352]); a first streaming digital audio content server (streaming socket, para [0314]) that is connected to the host server via a data network (para [0311]); and a wireless earphone (earphone 901, fig. 12c, being a wireless earphone, para [0161]-[0162]) that is in communication with the host server via a wireless network (para [0350]), wherein the host server is programmed to transmit to the earphone a first network address for the first streaming digital audio content server (one of the socket addresses, para [0272]-[0273]).

- - - - - - Please See Supplemental Box - - - - - -

WRITTEN OPINION OF THE INTERNATIONAL SEARCHING AUTHORITY

International application No.
PCT/US 09/39754

Supplemental Box

In case the space in any of the preceding boxes is not sufficient.
Continuation of:

Box V. 2. Citations and Explanations:

As per claim 37, Goldberg discloses a headset (headphones 1020, fig. 13e, para [0222]) comprising: a first earphone (left speaker 1022) that comprises one or more acoustic transducers for converting a first analog electrical signal to sound (para [0222]); and a second earphone (right speaker, not labeled in fig. 13e), connected to the first earphone (fig. 13e), wherein the second earphone comprises one or more acoustic transducers for converting a second analog electrical signal to sound (para [0222]), and wherein the first earphone comprises: a first antenna (antennae supported by portable devices, para [0142]); and a first transceiver circuit (transmitter/receiver 110, fig. 1, para [0178]) in communication with the one or more acoustic transducers of the first earphone (para [0134]) and in communication with the first antenna (para [0142]), wherein the first transceiver circuit is for receiving and transmitting wireless signals via the first antenna (para [0142]), and wherein the first transceiver circuit is for outputting the first analog electrical signal to the one or more acoustic transducers of the first earphone (para [0134]), and wherein the first transceiver circuit comprises firmware (instructions that implement a variety of protocols, para [0141] and [0165]), which when executed by the first transceiver circuit, causes the first transceiver circuit to: receive digital audio wirelessly from a data source (e.g., audio player 130, fig. 1 and 12c, para [0096] and [0155]) via an ad hoc wireless network (peer-to-peer communications, para [0165]) when the data source is in wireless communication range with the first earphone via the ad hoc wireless network (within a predetermined distance, para [0165]); and when the data source is not in wireless communication range with the first earphone via the ad hoc wireless network (outside of the range, para [0194] and [0269]), transition automatically to receive digital audio via an infrastructure wireless network (fixed infrastructure, para [0165]).

As per claim 43, Goldberg discloses a method (para [0165] and [0172]) comprising: receiving, by a wireless earphone (earphone 901, fig. 12c, being a wireless earphone, para [0161]-[0162]), via an ad hoc wireless network (peer-to-peer communications, para [0165]), digital audio from a data source (e.g., audio player 130, fig. 1 and 12c, para [0096] and [0155]) when the data source is in wireless communication with the earphone via the ad hoc wireless network (within a predetermined distance, para [0165]); converting, by the wireless earphone, the digital audio to sound; and when the data source is not in wireless communication with the earphone (outside of the range, para [0194] and [0269]), transitioning automatically, by the earphone, to receive digital audio via an infrastructure wireless network (fixed infrastructure, para [0165]).

As per claims 2 and 16, Goldberg further discloses that the data source comprises a digital audio player (e.g., portable MP3 player, para [0102]).

As per claim 3, Goldberg further discloses that the transceiver circuit comprises: a wireless communication module (wireless communications hardware, para [0179]); a processor unit in communication with the wireless communication module (microprocessor, para [0115]); a non-volatile memory unit in communication with the processor unit (means to store the digital software, para [0115]); and a volatile memory unit in communication with the processor unit (inherent feature with the microprocessor, para [0115]).

As per claim 4, Goldberg further discloses that the wireless communication module comprises a Wi-Fi communication module (para [0179]).

As per claims 5 and 24, Goldberg further discloses that the infrastructure wireless network comprises a WLAN (e.g., HiperLAN, para [0141], a wireless LAN standard).

As per claim 6 and 44, Goldberg further discloses that the transceiver circuit is for receiving digital audio from the data source via the infrastructure wireless network (audio data streaming, para [0165]) when the data source is not in wireless communication range with the earphone via the ad hoc wireless network (outside of the range, para [0194] and [0269]).

As per claims 7 and 25, Goldberg further discloses that the infrastructure wireless network is a pre-set infrastructure wireless network (fixed infrastructure, para [0165]) that the data source transitions to when the data source is not in wireless communication range with the earphone via the ad hoc wireless network and when the pre-set infrastructure wireless network is in range of both the earphone and the data source (e.g., through access points, para [0165]).

As per claims 8, 26 and 45, Goldberg further discloses that the firmware, when executed by the transceiver circuit, causes the transceiver circuit of the earphone to transmit data via the ad hoc wireless network to the data source regarding one or more infrastructure wireless networks detected by the transceiver circuit when the earphone and the data source are communicating via the ad hoc wireless network (mode switch 1950 made by the user, either manually, or automatically--for example, that the user chooses between different functions, para [0165]).

As per claims 9 and 27, Goldberg further discloses that the firmware, when executed by the transceiver circuit, causes the transceiver circuit of the earphone to connect to a host server (broadcast unit 710, fig. 13, para [0262], e.g., Internet device 1706, fig. 29, being a computer hosting a database, para [0352]) via a second infrastructure wireless network (alternatively through computers or computer networks to which the unit 100 can be connected, para [0311]) when (1) the data source is not in wireless communication range with the earphone via the ad hoc wireless network (outside of the range, para [0194] and [0269]) and (2) the data source and the earphone are not in wireless communication via the pre-set infrastructure wireless network (e.g., turned off, para [0269]).

As per claims 10, 17, 18 and 46, Goldberg further discloses that the firmware of the transceiver circuit of the wireless earphone, when executed by the transceiver circuit, causes the transceiver circuit of the earphone to connect to a host server (broadcast unit 710, fig. 13, para [0262], e.g., Internet device 1706, fig. 29, being a computer hosting a database, para [0352]) via the infrastructure wireless network when the data source is not in wireless communication range with the earphone via the ad hoc wireless network (outside of the range, [0194] and [0269]).

- - - - - - Please See Next Supplemental Box - - - - - -

WRITTEN OPINION OF THE INTERNATIONAL SEARCHING AUTHORITY

International application No.
PCT/US 09/39754

Supplemental Box

In case the space in any of the preceding boxes is not sufficient.
Continuation of:

Box V. 2. Citations and Explanations:

As per claims 11, 19 and 28, Goldberg further discloses that the earphone (para [0162] and [0222]) is for receiving streaming digital audio (para [0166] and [0322]) from the host server (para [0262] and [0352]) via the infrastructure wireless network (para [0165]).

As per claims 12, 20 and 29, Goldberg further discloses that the earphone is for receiving a first network address (one of socket addresses, para [0185]-[0186] and [0273]) for a first streaming digital audio content server (streaming socket, para [0314]) from the host server via the infrastructure wireless network (para [0165]).

As per claim 33, Goldberg further discloses that the wireless earphone comprises: at least one acoustic transducer (sound transducers 260, fig. 1, para [0099] and [0122]) for converting an analog electrical signal to sound (para [0137]); an antenna (antennae supported by portable devices, para [0142]); and a transceiver circuit (transmitter/receiver 110, fig. 1, para [0178]) in communication with the at least one acoustic transducer (para [0134]) and the antenna (para [0142]), wherein the transceiver circuit is for receiving and transmitting wireless signals via the antenna (para [0142]), and wherein the transceiver circuit is for outputting the analog electrical signal to the at least one acoustic transducer (para [0134]), and wherein the wireless transceiver circuit comprises firmware that is executed by the transceiver circuit (instructions that implement a variety of protocols, para [0141] and [0165]).

As per claims 23 and 34, Goldberg further discloses that the host server hosts a web page (web sites, para [0277]) for the wireless earphone through which a user is capable of configuring one or more settings for the wireless earphone (Audio personalization, para [0276]).

As per claim 35, Goldberg further discloses that the one or more settings comprise the first streaming digital audio content server and a second streaming digital audio content server (another streaming socket, para [0314]).

As per claims 13, 21, 30 and 36, Goldberg further discloses that the earphone comprises a user control (mode switch 1950, para [0165]) that, when activated, causes the earphone to submit an electronic request (sending control requests, para [0176]) via the infrastructure wireless network to the host server for a second network address (another of socket addresses, para [0185]-[0186] and [0273]) for a second streaming digital audio content server (another streaming socket, para [0314]).

As per claims 14, 22 and.31, Goldberg further discloses that the user control comprises a button (para [0173]).

As per claim 38, Goldberg further discloses a head band (fig. 13e), wherein the first and second earphones are connected to the headband (fig. 13e).

As per claim 39, Goldberg further discloses a microphone having an output connected to the first transceiver circuit (para [0174]).

As per claim 40, Goldberg further discloses that the first transceiver circuit is for outputting the second analog electrical signal to the one or more acoustic transducers of the second earphone (para [0222]).

As per claim 41, Goldberg further discloses that the second earphone comprises: a second antenna (antennae supported by portable devices, para [0142]); and a second transceiver circuit (transmitter/receiver 110, fig. 1, para [0178]) in communication with the one or more acoustic transducers of the second earphone (para [0134]) and in communication with the second antenna (para [0142]), wherein the second transceiver circuit is for receiving and transmitting wireless signals via the second antenna (para [0142]), and wherein the second transceiver circuit is for outputting the second analog electrical signal to the one or more acoustic transducers of the second earphone (para [0134]), and wherein the second transceiver circuit comprises firmware (instructions that implement a variety of protocols, para [0141] and [0165]), which when executed by the second transceiver circuit, causes the second transceiver circuit to: receive digital audio (e.g., audio player 130, fig. 1 and 12c, para [0096] and [0155]) wirelessly from the data source via the ad hoc wireless network (peer-to-peer communications, para [0165]) when the data source is in wireless communication range with the second earphone via the ad hoc wireless network (within a predetermined distance, para [0165]); and when the data source is not in wireless communication range with the second earphone via the ad hoc wireless network (outside of the range, para [0194] and [0269]), transition automatically to receive digital audio via the infrastructure wireless network (fixed infrastructure, para [0165]).

As per claim 42, Goldberg further discloses that the first earphone comprises a first data port and the second earphone comprises a second data port (carrying port number, para [0222]), and wherein the headset further comprises an adapter (e.g., cable 146, fig. 12c, para [0161] and [0328]) connected to the first data port of the first earphone and to the second data port of the second earphone (as wired headphones, para [0104]), and wherein the adapter comprises an output plug connector (the portion of the cable 146 connected to an output audio port 142, para [0161]) for connecting to a remote device (e.g., modular audio unit 132, fig. 12a and 12c, para [0328]).

As per claim 47, Goldberg further discloses that transitioning automatically by the earphone to receive digital audio via an infrastructure wireless network comprises: receiving, by the wireless earphone via the infrastructure wireless network, from a host server (broadcast unit 710, fig. 13, para [0262], e.g., Internet device 1706, fig. 29, being a computer hosting a database, para [0352]) connected to the infrastructure wireless network (para [0165]), a network address (one of socket addresses, para [0185]-[0186] and [0273]) for a streaming digital audio content server (streaming socket, para [0314]); and connecting, by the wireless earphone, to the streaming digital audio content server using the network address received from the host server (para [0222]).

Claims 1 - 47 have industrial applicability as defined by PCT Article 33(4) because the subject matter can be made or used in industry.

Electronic Patent Application Fee Transmittal

Application Number:	
Filing Date:	
Title of Invention:	SYSTEM WITH WIRELESS EARPHONES
First Named Inventor/Applicant Name:	Michael J. Koss
Filer:	Mark G. Knedeisen/Amanda Kernan
Attorney Docket Number:	080188PCTUSCON10

Filed as Small Entity

Filing Fees for Utility under 35 USC 111(a)

Description	Fee Code	Quantity	Amount	Sub-Total in USD($)
Basic Filing:				
UTILITY FILING FEE (ELECTRONIC FILING)	4011	1	75	75
UTILITY SEARCH FEE	2111	1	330	330
UTILITY EXAMINATION FEE	2311	1	380	380
Pages:				
Claims:				
Miscellaneous-Filing:				
Petition:				
Patent-Appeals-and-Interference:				

Description	Fee Code	Quantity	Amount	Sub-Total in USD($)
Post-Allowance-and-Post-Issuance:				
Extension-of-Time:				
Miscellaneous:				
			Total in USD ($)	**785**

Electronic Acknowledgement Receipt	
EFS ID:	35636394
Application Number:	16375879
International Application Number:	
Confirmation Number:	1056
Title of Invention:	SYSTEM WITH WIRELESS EARPHONES
First Named Inventor/Applicant Name:	Michael J. Koss
Customer Number:	26285
Filer:	Mark G. Knedeisen/Amanda Kernan
Filer Authorized By:	Mark G. Knedeisen
Attorney Docket Number:	080188PCTUSCON10
Receipt Date:	05-APR-2019
Filing Date:	
Time Stamp:	08:26:33
Application Type:	Utility under 35 USC 111(a)

Payment information:

Submitted with Payment	yes
Payment Type	DA
Payment was successfully received in RAM	$785
RAM confirmation Number	040519INTEFSW00007053021818
Deposit Account	021818
Authorized User	Amanda Kernan
The Director of the USPTO is hereby authorized to charge indicated fees and credit any overpayment as follows: 37 CFR 1.16 (National application filing, search, and examination fees) 37 CFR 1.17 (Patent application and reexamination processing fees)	

File Listing:

Document Number	Document Description	File Name	File Size(Bytes)/ Message Digest	Multi Part /.zip	Pages (if appl.)
1		080188PCTUSCON10-Application.pdf	173498 da216f1da096b8a4f81cc0402211c2fa669ecd31	yes	26
	Multipart Description/PDF files in .zip description				
	Document Description		**Start**	**End**	
	Specification		1	24	
	Claims		25	25	
	Abstract		26	26	
Warnings:					
Information:					
2	Drawings-only black and white line drawings	080188PCTUSCON10-Drawings.pdf	371180 b6416d53f93d5249a071715c69b7910af7436282	no	16
Warnings:					
Information:					
3	Power of Attorney	080188PCTUSCON10-POA.pdf	928681 da255ff569423130a8968752a2aa6f9628df75fa	no	2
Warnings:					
Information:					
4	Transmittal of New Application	080188PCTUSCON10-New-application-transmittals.pdf	218562 f7f6f2d9b0a44b7052ef3456baf7c04d9a270835	no	2
Warnings:					
Information:					
5	Oath or Declaration filed	Copy-declarations-from-parent-7.pdf	9588114 b91e27649670c1d2b8439bcc9e188d8d730f637e	no	9

Warnings:					
Information:					
6	Application Data Sheet	080188PCTUSCON10-ADS.pdf	1257231 44a6655933225ba016838fb53650b44e0db a69bc	no	11
Warnings:					
Information:					
7		080188PCTUSCON10-IDS.pdf	242744 601ea6aab5eec8bdf1b3e64999db1a8b047 7dd3a	yes	5
	Multipart Description/PDF files in .zip description				
	Document Description		**Start**	**End**	
	Transmittal Letter		1	1	
	Information Disclosure Statement (IDS) Form (SB08)		2	5	
Warnings:					
Information:					
8	Foreign Reference	JP2004320597A_English_Abstract.pdf	1329492 76ae6ad3ac3ec3181015862c3ae0b5d29ffa 3469	no	25
Warnings:					
Information:					
9	Foreign Reference	WO2006047724A2.pdf	485057 2366646a37c27bdefe8914db23f0271e507 d1d10	no	14
Warnings:					
Information:					
10	Foreign Reference	WO2007139578A1.pdf	1234412 402575e76ee3ddc7529e490cda15ce81ad7 d0eac	no	26
Warnings:					
Information:					
11	Foreign Reference	WO2007136620A2.pdf	1349138 a45ae2a75768b1694926caae627a8d6593a f6229	no	28
Warnings:					

Information:					
12	Foreign Reference	WO2008033478A1.pdf	988851 f678585c12634015e43b70bb3b8a118ed494775f	no	28
Warnings:					
Information:					
13	Foreign Reference	WO2008054985A2.pdf	1261055 567816ba48ae54c2474dc5fc74fd514e43187450	no	39
Warnings:					
Information:					
14	Foreign Reference	WO2009086555A1.pdf	2570916 54311c22f1ce774c1c7acbc91179f8ceeac20c0c	no	72
Warnings:					
Information:					
15	Other Reference-Patent/App/Search documents	080188_SESR_09731146-dated_06-10-2011.pdf	295177 31ca0dc1992e59b26dbc577df50464729a451bda	no	7
Warnings:					
Information:					
16	Other Reference-Patent/App/Search documents	080188_ISR_PCT-US2009-039754_dated_06-11-2009.pdf	163110 18ceb88ddce8c597dbe9c42a9d2e8a7c72c769bb	no	2
Warnings:					
Information:					
17	Other Reference-Patent/App/Search documents	080188_IPRP_PCT-US2009-039754_dated_10-28-2010.pdf	657232 599cbea6364b8a3b48842d0bc49811d6b1d9b121	no	8
Warnings:					
Information:					
18	Other Reference-Patent/App/Search documents	080188_WO_PCT-US2009-039754_dated_06-11-2009.pdf	554466 324fe640da411925ab95547cbc3c03b5c761182a	no	5
Warnings:					
Information:					

19	Non Patent Literature	IT_Review_WiFi_Headphones.pdf	263221 1fbd0d51b754822f36c2db0dc02cfd48f8413f73	no	4
Warnings:					
Information:					
20	Fee Worksheet (SB06)	fee-info.pdf	34825 46a084a2194861039011375 3103e18dbfa234a16	no	2
Warnings:					
Information:					
		Total Files Size (in bytes):	23966962		

This Acknowledgement Receipt evidences receipt on the noted date by the USPTO of the indicated documents, characterized by the applicant, and including page counts, where applicable. It serves as evidence of receipt similar to a Post Card, as described in MPEP 503.

New Applications Under 35 U.S.C. 111

If a new application is being filed and the application includes the necessary components for a filing date (see 37 CFR 1.53(b)-(d) and MPEP 506), a Filing Receipt (37 CFR 1.54) will be issued in due course and the date shown on this Acknowledgement Receipt will establish the filing date of the application.

National Stage of an International Application under 35 U.S.C. 371

If a timely submission to enter the national stage of an international application is compliant with the conditions of 35 U.S.C. 371 and other applicable requirements a Form PCT/DO/EO/903 indicating acceptance of the application as a national stage submission under 35 U.S.C. 371 will be issued in addition to the Filing Receipt, in due course.

New International Application Filed with the USPTO as a Receiving Office

If a new international application is being filed and the international application includes the necessary components for an international filing date (see PCT Article 11 and MPEP 1810), a Notification of the International Application Number and of the International Filing Date (Form PCT/RO/105) will be issued in due course, subject to prescriptions concerning national security, and the date shown on this Acknowledgement Receipt will establish the international filing date of the application.

UNITED STATES UTILITY PATENT APPLICATION FOR

SYSTEM WITH WIRELESS EARPHONES

PRIORITY CLAIM

[0001] The present application claims priority as a continuation to United States nonprovisional patent application Serial Number 16/182,927, filed November 7, 2018, which is a continuation of United States nonprovisional patent application Serial Number 15/962,305, filed April 25, 2018, now U.S. Patent 10,206,025, which is a continuation of United States nonprovisional patent application Serial No. 15/650,362, filed July 14, 2017, now U.S. Patent 9,986,325, issued May 29, 2018, which is a continuation of United States nonprovisional patent application Serial Number 15/293,785, filed October 14, 2016, now U.S. Patent 9,729,959, issued August 8, 2017, which is a continuation of United States nonprovisional patent application Serial Number 15/082,040, filed March 28, 2016, now U.S. Patent 9,497,535, issued November 15, 2016, which is a continuation of United States nonprovisional patent application Serial Number 14/695,696, filed April 24, 2015, now U.S. Patent 9,438,987, issued on September 6, 2016, which is a continuation of United States nonprovisional patent application Serial No. 13/609,409, filed September 11, 2012, now U.S. Patent 9,049,502, issued June 2, 2015, which is a continuation of United States nonprovisional patent application Serial No. 13/459,291, filed April 30, 2012, now U.S. Patent 8,571,544, issued October 29, 2013, which is a continuation of United States patent application Serial Number 12/936,488, filed December 20, 2010, now U.S. Patent 8,190,203, issued May 29, 2012, which is a national stage entry of PCT/US2009/039754, filed April 7, 2009, which claims priority to United States provisional patent application Serial Number 61/123,265, filed April 7, 2008, all of which are incorporated herein by reference in their entireties.

CROSS-REFERENCE TO RELATED APPLICATIONS

[0002] United States nonprovisional patent application Serial No. 14/031,938, filed September 13, 2013, now U.S. Patent 8,655,420, issued February 18, 2014, is also a continuation of United States nonprovisional patent application Serial No. 13/609,409, filed September 11, 2012, now U.S. Patent 9,049,502, mentioned above.

BACKGROUND

[0003] Digital audio players, such as MP3 players and iPods, that store and play digital audio files, are very popular. Such devices typically comprise a data storage unit for storing and playing the digital audio, and a headphone set that connects to the data storage unit, usually with a ¼" or a 3.5 mm jack and associated cord. Often the headphones are in-ear type headphones. The cord, however, between the headphones and the data storage unit can be cumbersome and annoying to users, and the length of the cord limits the physical distance between the data storage unit and the headphones. Accordingly, some cordless headphones have been proposed, such as the Monster iFreePlay cordless headphones from Apple Inc., which include a docking port on one of the earphones that can connect directly to an iPod Shuffle. Because they have the docking port, however, the Monster iFreePlay cordless headphones from Apple are quite large and are not in-ear type phones. Recently, cordless headphones that connect wirelessly via IEEE 802.11 to a WLAN-ready laptop or personal computer (PC) have been proposed, but such headphones are also quite large and not in-ear type phones.

SUMMARY

[0004] In one general aspect, the present invention is directed to a wireless earphone that comprises a transceiver circuit for receiving streaming audio from a data source, such as a digital audio player or a computer, over an ad hoc wireless network. When the data source and the earphone are out of range via the ad hoc wireless network, they may transition automatically to a common infrastructure wireless network (e.g., a wireless LAN). If there is no common infrastructure wireless network for both the data source and the earphone, the earphone may connect via an available infrastructure wireless network to a host server. The host server may, for example, broadcast streaming audio to the earphone and/or transmit to the earphone a network address (e.g., an Internet Protocol (IP) address) for a network-connected content server that streams digital audio. The earphone may then connect to the content server using the IP address. The content server may be an Internet radio server, including, for example, an Internet radio server that broadcasts streaming audio from the data source or some other content.

[0005] These and other advantageous, unique aspects of the wireless earphone are described below.

FIGURES

[0006] Various embodiments of the present invention are described herein by way of example in conjunction with the following figures, wherein:

Figures 1A-1E are views of a wireless earphone according to various embodiments of the present invention;

Figures 2A-2D illustrate various communication modes for a wireless earphone according to various embodiments of the present invention;

Figure 3 is a block diagram of a wireless earphone according to various embodiments of the present invention;

Figures 4A-4B show the wireless earphone connected to another device according to various embodiments of the present invention;

Figure 5 is a diagram of a process implemented by a host server according to various embodiments of the present invention;

Figure 6 is a diagram of a process implemented by the wireless earphone to transition automatically between wireless networks according to various embodiments of the present invention;

Figures 7, 8 and 10 illustrate communication systems involving the wireless earphone according to various embodiments of the present invention;

Figure 9 is a diagram of a headset including a wireless earphone and a microphone according to various embodiments of the present invention; and

Figure 11 is a diagram of a pair of wireless earphones with a dongle according to various embodiments of the present invention.

DESCRIPTION

[0007] In one general aspect, the present invention is directed to a wireless earphone that receives streaming audio data via ad hoc wireless networks and infrastructure wireless networks, and that transitions seamlessly between wireless networks. The earphone may comprise one or more in-ear, on-ear, or over-ear speaker elements. Two exemplary in-ear earphone shapes for the wireless earphone 10 are shown in Figures 1A and 1B, respectively, although in other embodiments the earphone may take different shapes and the exemplary shapes shown in Figures 1A and 1B are not intended to be limiting. In one embodiment, the earphone transitions

automatically and seamlessly, without user intervention, between communication modes. That is, the earphone may transition automatically from an ad hoc wireless network to an infrastructure wireless network, without user intervention. As used herein, an "ad hoc wireless network" is a network where two (or more) wireless-capable devices, such as the earphone and a data source, communicate directly and wirelessly, without using an access point. An "infrastructure wireless network," on the other hand, is a wireless network that uses one or more access points to allow a wireless-capable device, such as the wireless earphone, to connect to a computer network, such as a LAN or WAN (including the Internet).

[0008] Figures 1A and 1B show example configurations for a wireless earphone 10 according to various embodiments of the present invention. The examples shown in Figures 1A and 1B are not limiting and other configurations are within the scope of the present invention. As shown in Figures 1A and 1B, the earphone 10 may comprise a body 12. The body 12 may comprise an ear canal portion 14 that is inserted in the ear canal of the user of the earphone 10. In various embodiments, the body 12 also may comprise an exterior portion 15 that is not inserted into user's ear canal. The exterior portion 15 may comprise a knob 16 or some other user control (such as a dial, a pressure-activated switch, lever, etc.) for adjusting the shape of the ear canal portion 14. That is, in various embodiments, activation (e.g. rotation) of the knob 16 may cause the ear canal portion 14 to change shape so as to, for example, radially expand to fit snugly against all sides of the user's ear canal. Further details regarding such a shape-changing earbud earphone are described in application PCT/US08/88656, filed 31 December 2008, entitled "Adjustable Shape Earphone," which is incorporated herein by reference in its entirety. The earphone 10 also may comprise a transceiver circuit housed within the body 12. The transceiver circuit, described further below, may transmit and receive the wireless signals, including receive streaming audio for playing by the earphone 10. The transceiver circuit may be housed in the exterior portion 15 of the earphone 10 and/or in the ear canal portion 14.

[0009] Although the example earphones 10 shown in Figures 1A and 1B include a knob 16 for adjusting the shape of the ear canal portion 14, the present invention is not so limited, and in other embodiments, different means besides a knob 16 may be used to adjust the ear canal portion 14. In addition, in other embodiments, the earphone 10 may not comprise a shape-changing ear canal portion 14.

[0010] In various embodiments, the user may wear two discrete wireless earphones 10: one in each ear. In such embodiments, each earphone 10 may comprise a transceiver circuit. In such embodiments, the earphones 10 may be connected by a string or some other cord-type connector to keep the earphones 10 from being separated.

[0011] In other embodiments, as shown in Figure 1C, a headband 19 may connect the two (left and right) earphones 10. The headband 19 may be an over-the-head band, as shown in the example of Figure 1C, or the headband may be a behind-the-head band. In embodiments comprising a headband 19, each earphone 10 may comprise a transceiver circuit; hence, each earphone 10 may receive and transmit separately the wireless communication signals. In other embodiments comprising a headband 19, only one earphone 10 may comprise the transceiver circuit, and a wire may run along the headband 19 to the other earphone 10 to connect thereby the transceiver circuit to the acoustic transducer in the earphone that does not comprise the transceiver circuit. The embodiment shown in Figure 1C comprises on-ear earphones 10; in other embodiments, in-ear or over-ear earphones may be used.

[0012] In other embodiments, the earphone 10 may comprise a hanger bar 17 that allows the earphone 10 to clip to, or hang on, the user's ear, as shown in the illustrated embodiment of Figures 1D-1E. Figure 1D is a perspective view of the earphone and Figure 1E is a side view according to one embodiment. As shown in the illustrated embodiment, the earphone 10 may comprise dual speaker elements 106-A, 106-B. One of the speaker elements (the smaller one) 106-A is sized to fit into the cavum concha of the listener's ear and the other element (the larger one) 106-B is not. The listener may use the hanger bar to position the earphone on the listener's ear. In that connection, the hanger bar may comprise a horizontal section that rests upon the upper external curvature of the listener's ear behind the upper portion of the auricula (or pinna). The earphone may comprise a knurled knob that allows the user to adjust finely the distance between the horizontal section of the hanger bar and the speaker elements, thereby providing, in such embodiments, another measure of adjustability for the user. More details regarding such a dual element, adjustable earphone may be found in United States provisional patent application Serial No. 61/054,238, which is incorporated herein by reference in its entirety.

[0013] Figures 2A-2D illustrate various communication modes for a wireless data communication system involving the earphone 10 according to embodiments of the present invention. As shown in Figure 2A, the system comprises a data source 20 in communication

with the earphone 10 via an ad hoc wireless network 24. The earphone 10, via its transceiver circuit (described in more detail below), may communicate wirelessly with a data source 20, which may comprise a wireless network adapter 22 for transmitting the digital audio wirelessly. For example, the data source 20 may be a digital audio player (DAP), such as an mp3 player or an iPod, or any other suitable digital audio playing device, such as a laptop or personal computer, that stores and/or plays digital audio files. In other embodiments, the data source 20 may generate analog audio, and the wireless network adapter 22 may encode the analog audio into digital format for transmission to the earphone 10.

[0014] The wireless network adapter 22 may be an integral part of the data source 20, or it may be a separate device that is connected to the data source 20 to provide wireless connectivity for the data source 20. For example, the wireless network adapter 22 may comprise a wireless network interface card (WNIC) or other suitable transceiver that plugs into a USB port or other port or jack of the data source 20 (such as a TRS connector) to stream data, e.g., digital audio files, via a wireless network (e.g., the ad hoc wireless network 24 or an infrastructure wireless network). The digital audio transmitted from the data source 20 to the earphone 10 via the wireless networks may comprise compressed or uncompressed audio. Any suitable file format may be used for the audio, including mp3, lossy or lossless WMA, Vorbis, Musepack, FLAC, WAV, AIFF, AU, or any other suitable file format.

[0015] When in range, the data source 20 may communicate with the earphone 10 via the ad hoc wireless network 24 using any suitable wireless communication protocol, including Wi-Fi (e.g., IEEE 802.11a/b/g/n), WiMAX (IEEE 802.16), Bluetooth, Zigbee, UWB, or any other suitable wireless communication protocol. For purposes of the description to follow, it is assumed that the data source 20 and the earphone 10 communicate using a Wi-Fi protocol, although the invention is not so limited and other wireless communication protocols may be used in other embodiments of the invention. The data source 20 and the earphone 10 are considered in range for the ad hoc wireless network 24 when the signal strengths (e.g., the RSSI) of the signals received by the two devices are above a threshold minimum signal strength level. For example, the data source 20 and the earphone 10 are likely to be in range for an ad hoc wireless network when then are in close proximity, such as when the wearer of the earphone 10 has the data source 20 on his/her person, such as in a pocket, strapped to their waist or arm, or holding the data source in their hand.

[0016] When the earphone 10 and the data source 20 are out of range for the ad hoc wireless network 24, that is, when the received signals degrade below the threshold minimum signal strength level, both the earphone 10 and the data source 20 may transition automatically to communicate over an infrastructure wireless network (such as a wireless LAN (WLAN)) 30 that is in the range of both the earphone 10 and the data source 20, as shown in Figure 2B. The earphone 10 and the data source 20 (e.g., the wireless network adapter 22) may include firmware, as described further below, that cause the components to make the transition to a common infrastructure wireless network 30 automatically and seamlessly, e.g., without user intervention. The earphone 10 may cache the received audio in a buffer or memory for a time period before playing the audio. The cached audio may be played after the connection over the ad hoc wireless network is lost to give the earphone 10 and the data source 20 time to connect via the infrastructure wireless network.

[0017] For example, as shown in Figure 2B, the infrastructure network may comprise an access point 32 that is in the range of both the data source 20 and the earphone 10. The access point 32 may be an electronic hardware device that acts as a wireless access point for, and that is connected to, a wired and/or wireless data communication network 33, such as a LAN or WAN, for example. The data source 20 and the earphone 10 may both communicate wirelessly with the access point 32 using the appropriate network data protocol (a Wi-Fi protocol, for example). The data source 20 and the earphone 10 may both transition automatically to an agreed-upon WLAN 30 that is in the range of both devices when they cannot communicate satisfactorily via the ad hoc wireless network 24. A procedure for specifying an agreed-upon infrastructure wireless network 30 is described further below. Alternatively, the infrastructure wireless network 30 may have multiple access points 32a-b, as shown in Figure 2C. In such an embodiment, the data source 20 may communicate wirelessly with one access point 32b and the earphone 10 may communicate wirelessly with another access point 32a of the same infrastructure wireless network 30. Again, the data source 20 and the earphone 10 may transition to an agreed-upon WLAN.

[0018] If there is no suitable common infrastructure wireless network over which the earphone 10 and the data source 20 can communicate, as shown in Fig. 2D, the earphone 10 may transition to communicate with an access point 32a for an available (first) wireless network (e.g., WLAN) 30a that is in the range of the earphone 10. In this mode, the earphone 10 may connect via the

wireless network 30a to a network-enabled host server 40. The host server 40 may be connected to the wireless network 30a via an electronic data communication network 42, such as the Internet. In one mode, the host server 40 may transmit streaming digital audio via the networks 33a, 42 to the earphone 10. In another mode, the host server 40 may transmit to the earphone 10 a network address, such as an Internet Protocol (IP) address, for a streaming digital audio content server 70 on the network 42. Using the received IP address, the earphone 10 may connect to the streaming digital audio content server 70 via the networks 30a, 42 to receive and process digital audio from the streaming digital audio content server 70.

[0019] The digital audio content server 70 may be, for example, an Internet radio station server. The digital audio content server 70 may stream digital audio over the network 42 (e.g., the Internet), which the earphone 10 may receive and process. In one embodiment, the streaming digital audio content server 70 may stream digital audio received by the streaming digital audio content server 70 from the data source 20. For example, where the data source 20 is a wireless-capable device, such as a portable DAP, the data source 20 may connect to the streaming digital audio content server 70 via a wireless network 30b and the network 42. Alternatively, where for example the data source 20 is non-wireless-capable device, such as a PC, the data source 20 may have a direct wired connection to the network 42. After being authenticated by the streaming digital audio content server 70, the data source 20 may stream digital audio to the streaming digital audio content server 70, which may broadcast the received digital audio over the network 42 (e.g., the Internet). In such a manner, the user of the earphone 10 may listen to audio from the data source 20 even when (i) the earphone 10 and the data source 20 are not in communication via an ad hoc wireless network 24 and (ii) the earphone 10 and the data source 20 are not in communication via a common local infrastructure wireless network 30.

[0020] Figure 3 is a block diagram of the earphone 10 according to various embodiments of the present invention. In the illustrated embodiment, the earphone 10 comprises a transceiver circuit 100 and related peripheral components. As shown in Figure 3, the peripheral components of the earphone 10 may comprise a power source 102, a microphone 104, one or more acoustic transducers 106 (e.g., speakers), and an antenna 108. The transceiver circuit 100 and some of the peripheral components (such as the power source 102 and the acoustic transducers 106) may be housed within the body 12 of the earphone 10 (see Figure 1). Other peripheral components, such as the microphone 104 and the antenna 108 may be external to the body 12 of the earphone 10.

In addition, some of the peripheral components, such as the microphone 104, are optional in various embodiments.

[0021] In various embodiments, the transceiver circuit 100 may be implemented as a single integrated circuit (IC), such as a system-on-chip (SoC), which is conducive to miniaturizing the components of the earphone 10, which is advantageous if the earphone 10 is to be relatively small in size, such as an in-ear earphone (see Figures 1A-1B for example). In alternative embodiments, however, the components of the transceiver circuit 100 could be realized with two or more discrete ICs or other components, such as separate ICs for the processors, memory, and RF (e.g., Wi-Fi) module, for example.

[0022] The power source 102 may comprise, for example, a rechargeable or non-rechargeable battery (or batteries). In other embodiments, the power source 102 may comprise one or more ultracapacitors (sometimes referred to as supercapacitors) that are charged by a primary power source. In embodiments where the power source 102 comprises a rechargeable battery cell or an ultracapacitor, the battery cell or ultracapacitor, as the case may be, may be charged for use, for example, when the earphone 10 is connected to a docking station or computer. The docking station may be connected to or part of a computer device, such as a laptop computer or PC. In addition to charging the rechargeable power source 102, the docking station and/or computer may facilitate downloading of data to and/or from the earphone 10. In other embodiments, the power source 102 may comprise capacitors passively charged with RF radiation, such as described in U.S. Patent No. 7,027,311. The power source 102 may be coupled to a power source control module 103 of transceiver circuit 100 that controls and monitors the power source 102.

[0023] The acoustic transducer(s) 106 may be the speaker element(s) for conveying the sound to the user of the earphone 10. According to various embodiments, the earphone 10 may comprise one or more acoustic transducers 106. For embodiments having more than one transducer, one transducer may be larger than the other transducer, and a crossover circuit (not shown) may transmit the higher frequencies to the smaller transducer and may transmit the lower frequencies to the larger transducer. More details regarding dual element earphones are provided in U.S. Patent 5,333,206, assigned to Koss Corporation, which is incorporated herein by reference in its entirety.

[0024] The antenna 108 may receive and transmit the wireless signals from and to the wireless networks 24, 30. A RF (e.g., Wi-Fi) module 110 of the transceiver circuit 100 in communication with the antenna 108 may, among other things, modulate and demodulate the signals transmitted from and received by the antenna 108. The RF module 110 communicates with a baseband processor 112, which performs other functions necessary for the earphone 10 to communicate using the Wi-Fi (or other communication) protocol.

[0025] The baseband processor 112 may be in communication with a processor unit 114, which may comprise a microprocessor 116 and a digital signal processor (DSP) 118. The microprocessor 116 may control the various components of the transceiver circuit 100. The DSP 114 may, for example, perform various sound quality enhancements to the digital audio received by the baseband processor 112, including noise cancellation and sound equalization. The processor unit 114 may be in communication with a volatile memory unit 120 and a non-volatile memory unit 122. A memory management unit 124 may control the processor unit's access to the memory units 120, 122. The volatile memory 122 may comprise, for example, a random access memory (RAM) circuit. The non-volatile memory unit 122 may comprise a read only memory (ROM) and/or flash memory circuits. The memory units 120, 122 may store firmware that is executed by the processor unit 114. Execution of the firmware by the processor unit 114 may provide various functionality for the earphone 10, such as the automatic transition between wireless networks as described herein. The memory units 120, 122 may also cache received digital audio.

[0026] A digital-to-analog converter (DAC) 125 may convert the digital audio from the processor unit 114 to analog form for coupling to the acoustic transducer(s) 106. An I^2S interface 126 or other suitable serial or parallel bus interface may provide the interface between the processor unit 114 and the DAC 125. An analog-to-digital converter (ADC) 128, which also communicates with the I^2S interface 126, may convert analog audio signals picked up by the microphone 104 for processing by the processor unit 114.

[0027] The transceiver circuit 100 also may comprise a USB or other suitable interface 130 that allows the earphone 10 to be connected to an external device via a USB cable or other suitable link. As shown in Figure 4A, the external device may be a docking station 200 connected to a computer device 202. Also, in various embodiments, the earphone 10 could be connected directly to the computer 202 without the docking station 200. In addition, the external

device may be a DAP 210, as shown in Figure 4B. In that way, the earphone 10 could connect directly to a data source 20, such as the DAP 210 or the computer 202, through the USB port 130. In addition, through the USB port 130, the earphone 10 may connect to a PC 202 or docking station 202 to charge up the power source 102 and/or to get downloads (e.g., data or firmware).

[0028] According to various embodiments, the earphone 10 may have an associated web page that a user may access through the host server 40 (see Figure 2D) or some other server. An authenticated user could log onto the website from a client computing device 50 (e.g., laptop, PC, handheld computer device, etc., including the data source 20) (see Figure 2D) to access the web page for the earphone 10 to set various profile values for the earphone 10. For example, at the web site, the user could set various content features and filters, as well as adjust various sound control features, such as treble, bass, frequency settings, noise cancellation settings, etc. In addition, the user could set preferred streaming audio stations, such as preferred Internet radio stations or other streaming audio broadcasts. That way, instead of listening to streaming audio from the data source 20, the user could listen to Internet radio stations or other streaming audio broadcasts received by the earphone 10. In such an operating mode, the earphone user, via the web site, may prioritize a number of Internet radio stations or other broadcast sources (hosted by streaming digital audio content servers 70). With reference to Figure 7, the host server 40 may send the IP address for the earphone user's desired (e.g., highest priority) Internet radio station to the earphone 10. A button 11 on the earphone 10, such as on the rotating dial 16 as shown in the examples of Figures 1A and 1B, may allow the user to cycle through the preset preferred Internet radio stations. That is, for example, when the user presses the button 11, an electronic communication may be transmitted to the host server 40 via the wireless network 30, and in response to receiving the communication, the host server 40 may send the IP address for the user's next highest rated Internet radio station via the network 42 to the earphone 10. The earphone 10 may then connect to the streaming digital audio content server 70 for that Internet radio station using the IP address provided by the host server 40. This process may be repeated, e.g., cycled through, for each preset Internet radio station configured by the user of the earphone 10.

[0029] At the web site for the earphone 10 hosted on the host server 40, in addition to establishing the identification of digital audio sources (e.g., IDs for the user's DAP or PC) and

earphones, the user could set parental or other user controls. For example, the user could restrict certain Internet radio broadcasts based on content or parental ratings, etc. That is, for example, the user could configure a setting through the web site that prevents the host server 40 from sending an IP address for a streaming digital audio content server 70 that broadcasts explicit content based on a rating for the content. In addition, if a number of different earphones 10 are registered to the same user, the user could define separate controls for the different earphones 10 (as well as customize any other preferences or settings particular to the earphones 10, including Internet radio stations, sound quality settings, etc. that would later be downloaded to the earphones 10). In addition, in modes where the host server 40 streams audio to the earphone 10, the host server 40 may log the files or content streamed to the various earphones 10, and the user could view at the web site the files or content that were played by the earphones 10. In that way, the user could monitor the files played by the earphones 10.

[0030] In addition, the host server 40 may provide a so-called eavesdropping function according to various embodiments. The eavesdropping service could be activated via the web site. When the service is activated, the host server 40 may transmit the content that it is delivering to a first earphone 10a to another, second earphone 10b, as shown in Figure 8. Alternatively, the host server 40 may transmit to the second earphone 10b the most recent IP address for a streaming digital audio content server 70 that was sent to the first earphone 10a. The second earphone 10b may then connect to the streaming digital audio content server 70 that the first earphone 10a is currently connected. That way, the user of the second earphone 10b, which may be a parent, for example, may directly monitor the content being received by the first earphone 10a, which may belong to a child of the parent.

[0031] This function also could be present in the earphones 10 themselves, allowing a parent (or other user) to join an ad-hoc wireless network and listen to what their child (or other listener) is hearing. For example, with reference to Figure 10, a first earphone 10a may receive wireless audio, such as from the data source 20 or some other source, such as the host server 40. The first earphone 10a may be programmed with firmware to broadcast the received audio to a second earphone 10b via an ad hoc wireless network 24. That way, the wearer of the second earphone 10b can monitor in real-time the content being played by the first earphone 10a.

[0032] At the web site, the user may also specify the identification number ("ID") of their earphone(s) 10, and the host server 40 may translate the ID to the current internet protocol (IP)

addresses for the earphone 10 and for the data source 20. This allows the user to find his or her data source 20 even when it is behind a firewall or on a changing IP address. That way, the host server 40 can match the audio from the data source 20 to the appropriate earphone 10 based on the specified device ID. The user also could specify a number of different data sources 20. For example, the user's DAP may have one specified IP address and the user's home (or work) computer may have another specified IP address. Via the web site hosted by the host server 40, the user could specify or prioritize from which source (e.g., the user's DAP or computer) the earphone 10 is to receive content.

[0033] The host server 40 (or some other server) may also push firmware upgrades and/or data updates to the earphone 10 using the IP addresses of the earphone 10 via the networks 30, 42. In addition, a user could download the firmware upgrades and/or data updates from the host server 40 to the client computing device 202 (see Figure 4A) via the Internet, and then download the firmware upgrades and/or data updates to the earphone 10 when the earphone 10 is connected to the client computer device 202 (such as through a USB port and/or the docking station 200).

[0034] Whether the downloads are transmitted wirelessly to the earphone 10 or via the client computing device 202 may depend on the current data rate of the earphone 10 and the quantity of data to be transmitted to the earphone 10. For example, according to various embodiments, as shown in the process flow of Figure 5, the host server 40 may be programmed, at step 50, to make a determination, based on the current data rate for the earphone 10 and the size of the update, whether the update should be pushed to the earphone 10 wirelessly (e.g., via the WLAN 30a in Figure 2D). If the update is too large and/or the current data rate is too low that the performance of the earphone 10 will be adversely affected, the host server 40 may refrain from pushing the update to the earphone 10 wirelessly and wait instead to download the update to the client computing device 202 at step 51. Conversely, if the host server 40 determines that, given the size of the update and the current data rate for the earphone 10 that the performance of the earphone 10 will not be adversely affected, the host server 40 may transmit the update wirelessly to the earphone 10 at step 52.

[0035] As mentioned above, the processor unit 114 of the speakerphones 14 may be programmed, via firmware stored in the memory 120, 122, to have the ability to transition automatically from the ad hoc wireless network 24 to an infrastructure wireless network 30 (such as a WLAN) when the quality of the signal on the ad hoc wireless network 24 degrades below a

suitable threshold (such as when the data source 20 is out of range for an ad hoc wireless network). In that case, the earphone 10 and the data source 20 may connect to a common infrastructure wireless network (e.g., WLAN) (see, for example, Figures 2B-2C). Through the web site for the earphone 10, described above, the user could specify a priority of infrastructure wireless networks 30 for the data source 20 and the earphone 10 to connect to when the ad hoc wireless network 24 is not available. For example, the user could specify a WLAN servicing his/her residence first, a WLAN servicing his/her place of employment second, etc. During the time that the earphone 10 and the data source 20 are connected via the ad hoc wireless network 24, the earphone 10 and the data source 20 may exchange data regarding which infrastructure networks are in range. When the earphone 10 and the data source 20 are no longer in range for the ad hoc wireless network 24 (that is, for example, the signals between the device degrade below an acceptable level), they may both transition automatically to the highest prioritized infrastructure wireless network whose signal strength is above a certain threshold level. That way, even though the earphone 10 and the data source 20 are out of range for the ad hoc wireless network 24, the earphone 10 may still receive the streaming audio from the data source 20 via the infrastructure wireless network 30 (see Figs. 2B-2C).

[0036] When none of the preferred infrastructure networks is in range, the earphone 10 may connect automatically to the host server 40 via an available infrastructure wireless network 30 (see Fig. 2D), e.g., the infrastructure wireless network 30 having the highest RSSI and to which the earphone 10 is authenticated to use. The host server 40, as mentioned above, may transmit IP addresses to the earphone 10 for streaming digital audio content servers 70 or the host sever 40 may stream digital audio to the earphone 10 itself when in this communication mode.

[0037] Figure 6 is a diagram of the process flow, according to one embodiment, implemented by the transceiver circuit 100 of the earphone 10. The process shown in Figure 6 may be implemented in part by the processor unit 114 executing firmware stored in a memory unit 120, 122 of the transceiver circuit 100. At step 61, the earphone 10 may determine if it can communicate with the data source 20 via an ad hoc wireless network 24. That is, the earphone 10 may determine if the strength of the wireless signals from the data source 20 exceed some minimum threshold. If so, the data source 20 and the earphone 10 may communicate wirelessly via the ad hoc wireless network 24 (see Figure 2A). While in this communication mode, at step 62, the data source 20 and the earphone 10 also may exchange data regarding the local

infrastructure wireless networks, if any, in the range of the data source 20 and the earphone 10, respectively. For example, the earphone 10 may transmit the ID of local infrastructure wireless networks 30 that the earphone 10 can detect whose signal strength (e.g., RSSI) exceeds some minimum threshold level. Similarly, the data source 20 may transmit the ID the local infrastructure wireless networks 30 that the data source 20 can detect whose signal strength (e.g., RSSI) exceeds some minimum threshold level. The earphone 10 may save this data in a memory unit 120, 122. Similarly, the data source 20 may store in memory the wireless networks that the earphone 10 is detected.

[0038] The data source 20 and the earphone 10 may continue to communicate via the ad hoc wireless network mode 24 until they are out of range (e.g., the signal strengths degrade below a minimum threshold level). If an ad hoc wireless network 24 is not available at block 61, the transceiver circuit 100 and the data source 20 may execute a process, shown at block 63, to connect to the user's highest prioritized infrastructure wireless network 30. For example, of the infrastructure wireless networks whose signal strength exceeded the minimum threshold for both the earphone 10 and the data source 20 determined at step 62, the earphone 10 and the data source 20 may both transition to the infrastructure wireless network 30 having the highest priority, as previously set by the user (seen Figures 2B-2C, for example). For example, if the user's highest prioritized infrastructure wireless network 30 is not available, but the user's second highest prioritized infrastructure wireless network 30 is, the earphone 10 and the data source 20 may both transition automatically to the user's second highest prioritized infrastructure wireless network 30 at block 64. As shown by the loop with block 65, the earphone 10 and the data source 20 may continue to communicate via one of the user's prioritized infrastructure wireless networks 30 as long as the infrastructure wireless network 30 is available. If the infrastructure wireless network becomes unavailable, the process may return to block 61.

[0039] If, however, no ad hoc wireless network and none of the user's prioritized infrastructure wireless networks are available, the earphone 10 may transition automatically to connect to the host server 40 at block 66 (see Figure 2D) using an available infrastructure wireless network 30. At block 67, the host server 40 may transmit an IP address to the earphone 10 for one of the streaming digital audio content servers 70, and at block 68 the earphone 10 may connect to the streaming digital audio content server 70 using the received IP address. At step 69, as long as the earphone 10 is connected to the streaming digital audio content server 70, the earphone 10

may continue to communicate in this mode. However, if the earphone 10 loses its connection to the digital audio content server 70, the process may return to block 61 in one embodiment. As mentioned above, at block 67, instead of sending an IP address for a streaming digital audio content server 70, the host server 40 may stream digital audio to the earphone 10. The user, when configuring their earphone 10 preferences via the web site, may specify and/or prioritize whether the host server 40 is to send IP addresses for the streaming digital audio content servers 70 and/or whether the host server 40 is to stream audio to the earphone 10 itself.

[0040] In another embodiment, the earphone 10 may be programmed to transition automatically to the host server 40 when the earphone 10 and the data source 20 are not in communication via the ad hoc wireless network 24. That is, in such an embodiment, the earphone 10 may not try to connect via a local infrastructure wireless network 30 with the data source 20, but instead transition automatically to connect to the host server 40 (see Figure 2D).

[0041] In various embodiments, as shown in Figure 1B, the button 11 or other user selection device that allows the wearer of the earphone 10 to indicate approval and/or disapproval of songs or other audio files listened to by the wearer over an Internet radio station. The approval/disapproval rating, along with metadata for the song received by the earphone 10 with the streaming audio, may be transmitted from the transceiver circuit 100 of the earphone 10 back to the host server 40, which may log the songs played as well as the ratings for the various songs/audio files. In addition to being able to view the logs at the website, the host server 40 (or some other server) may send an email or other electronic communication to the earphone user, at a user specified email address or other address, which the user might access from their client communication device 50 (see Figure 2D). The email or other electronic communication may contain a listing of the song/audio files for which the user gave approval ratings using the button 11 or other user selection device. Further, the email or other electronic communication may provide a URL link for a URL at which the user could download song/audio files that the user rated (presumably song/audio files for which the user gave an approval rating). In some instances, the user may be required to pay a fee to download the song/audio file.

[0042] The user song ratings also may be used by the host server 40 to determine the user's musical preferences and offer new music that the user might enjoy. More details about generating user play lists based on song ratings may be found in published U.S. patent

applications Pub. No. 2006/0212444, Pub. No. 2006/0206487, and Pub. No. 2006/0212442, and U.S. Patent 7,003,515, which are incorporated herein by reference in their entirety.

[0043] In addition or alternatively, the user could log onto a web site hosted by the host server 40 (or some other server) to view the approval/disapproval ratings that the user made via the button 11 on the earphone 10. The web site may provide the user with the option of downloading the rated songs/audio files (for the host server 40 or some other server system) to their client computer device 50. The user could then have their earphone 10 connect to their client computer device 50 as a data source 20 via an ad hoc wireless network 24 (see Figure 2A) or via an infrastructure wireless network (see Figures 2B-2D) to listen to the downloaded songs. In addition, the user could download the song files from their client computer device 50 to their DAP and listen to the downloaded song files from their DAP by using their DAP as the data source 20 in a similar manner.

[0044] Another application of the headsets may be in vehicles equipped with Wi-Fi or other wireless network connectivity. Published PCT application WO 2007/136620, which is incorporated herein by reference, discloses a wireless router for providing a Wi-Fi or other local wireless network for a vehicle, such as a car, truck, boat, bus, etc. In a vehicle having a Wi-Fi or other local wireless network, the audio for other media systems in the vehicle could be broadcast over the vehicle's wireless network. For example, if the vehicle comprises a DVD player, the audio from the DVD system could be transmitted to the router and broadcast over the vehicle's network. Similarly, the audio from terrestrial radio stations, a CD player, or an audio cassette player could be broadcast over the vehicle's local wireless network. The vehicle's passengers, equipped with the earphones 10, could cycle through the various audio broadcasts (including the broadcasts from the vehicle's media system as well as broadcasts from the host server 40, for example) using a selection button 11 on the earphone 10. The vehicle may also be equipped with a console or terminal, etc., through which a passenger could mute all of the broadcasts for direct voice communications, for example.

[0045] As described above, the earphones 10 may also include a microphone 104, as shown in the example of Figure 9. The headset 90 shown in Figure 9 includes two earphones 10, both of which may include a transceiver circuit 100 or only one of which may include the transceiver circuit, as discussed above. The microphone 104 could be used to broadcast communications from one earphone wearer to another earphone wearer. For example, one wearer could activate

the microphone by pressing a button 92 on the headset 90. The headset 90 may then transmit a communication via an ad hoc wireless network 24 or other wireless network to a nearby recipient (or recipients) equipped with a headset 90 with a transceiver circuit 100 in one or both of the earphones 10. When such communication is detected by the recipient's headset 90, the streaming audio received over the wireless network by the recipient's headset 90 may be muted, and the intercom channel may be routed to the transducer(s) of the recipient's headset 90 for playing for the recipient. This functionality may be valuable and useful where multiple wearers of the headsets 90 are in close proximity, such as on motorcycles, for example.

[0046] Another exemplary use of the earphones 10 is in a factory, warehouse, construction site, or other environment that might be noisy. Persons (e.g., workers) in the environment could use the earphones 10 for protection from the surrounding noise of the environment. From a console or terminal, a person (e.g., a supervisor) could select a particular recipient for a communication over the Wi-Fi network (or other local wireless network). The console or terminal may have buttons, dials, or switches, etc., for each user/recipient, or it could have one button or dial through which the sender could cycle through the possible recipients. In addition, the console or terminal could have a graphical user interface, through which the sender may select the desired recipient(s).

[0047] As mentioned above, the earphones 10 may comprise a USB port. In one embodiment, as shown in Figure 11, the user may use an adapter 150 that connects to the USB port of each earphone 10. The adapter 150 may also have a plug connector 152, such as a 3.5 mm jack, which allows the user to connect the adapter 150 to devices having a corresponding port for the connector 152. When the earphones 10 detect a connection via their USB interfaces in such a manner, the Wi-Fi (or other wireless protocol) components may shut down or go into sleep mode, and the earphones 10 will route standard headphone level analog signals to the transducer(s) 106. This may be convenient in environments where wireless communications are not permitted, such as airplanes, but where there is a convenient source of audio contact. For example, the adapter 150 could plug into a person's DAP. The DSP 118 of the earphone 10 may still be operational in such a non-wireless mode to provide noise cancellation and any applicable equalization.

[0048] The examples presented herein are intended to illustrate potential and specific implementations of the embodiments. It can be appreciated that the examples are intended

primarily for purposes of illustration for those skilled in the art. No particular aspect of the examples is/are intended to limit the scope of the described embodiments.

[0049] According to various embodiments, therefore, the present invention is directed to an earphone 10 that comprises a body 12, where the body 12 comprises: (i) at least one acoustic transducer 106 for converting an electrical signal to sound; (ii) an antenna 108; and (iii) a transceiver circuit 100 in communication with the at least one acoustic transducer 106 and the antenna 108. The transceiver circuit 100 is for receiving and transmitting wireless signals via the antenna 108, and the transceiver circuit 100 is for outputting the electrical signal to the at least one acoustic transducer 106. The wireless transceiver circuit also comprises firmware, which when executed by the transceiver circuit, causes the transceiver circuit to: (i) receive digital audio wirelessly from a data source 20 via an ad hoc wireless network 24 when the data source 20 is in wireless communication range with the earphone 10 via the ad hoc wireless network 24; and (ii) when the data source 20 is not in wireless communication range with the earphone 10 via the ad hoc wireless network 24, transition automatically to receive digital audio via an infrastructure wireless network 30.

[0050] According to various implementations, the data source may comprise a portable digital audio player, such as an MP3 player, iPod, or laptop computer, or a nonportable digital audio player, such as a personal computer. In addition, the transceiver circuit 100 may comprise: (i) a wireless communication module 110 (such as a Wi-Fi or other wireless communication protocol module); (ii) a processor unit 114 in communication with the wireless communication module 110; (iii) a non-volatile memory unit 122 in communication with the processor unit 114; and (iv) a volatile memory 120 unit in communication with the processor unit 114. The infrastructure wireless network may comprise a WLAN. The transceiver circuit 100 may receive digital audio from the data source 20 via the infrastructure wireless network 30 when the data source 20 is not in wireless communication range with the earphone 10 via the ad hoc wireless network 24. The transceiver circuit firmware, when executed by the transceiver circuit 100, may cause the transceiver circuit 100 of the earphone 10 to transition automatically to a pre-set infrastructure wireless network 30 that the data source 20 transitions to when the data source 20 is not in wireless communication range with the earphone 10 via the ad hoc wireless network 24 and when the pre-set infrastructure wireless network 30 is in range of both the earphone 10 and the data source 20. In addition, the transceiver circuit firmware, when executed by the transceiver

circuit 100, may cause the transceiver circuit 100 of the earphone 10 to transmit data via the ad hoc wireless network 24 to the data source 20 regarding one or more infrastructure wireless networks 30 detected by the transceiver circuit 100 when the earphone 10 and the data source 20 are communicating via the ad hoc wireless network 24.

[0051] In addition, the transceiver circuit firmware, when executed by the transceiver circuit 100, may cause the transceiver circuit 100 of the earphone 10 to connect to a host server 40 via an available infrastructure wireless network 30 when the data source 20 is not in wireless communication range with the earphone 10 via the ad hoc wireless network 24. The earphone 10 may receive streaming digital audio from the host server 40 via the infrastructure wireless network 30. In addition, the earphone 10 may receive a first network address for a first streaming digital audio content server 70 from the host server 40 via the infrastructure wireless network 30. In addition, the earphone 10 may comprise a user control, such as button 11, dial, pressure switch, or other type of user control, that, when activated, causes the earphone 10 to transmit an electronic request via the infrastructure wireless network 30 to the host server 40 for a second network address for a second streaming digital audio content server 70.

[0052] In other embodiments, the present invention is directed to a system that comprises: (i) a data source 20 for wirelessly transmitting streaming digital audio; and (ii) a wireless earphone 10 that is in wireless communication with the data source 20. In yet other embodiments, the present invention is directed to a communication system that comprises: (i) a host server 40; (ii) a first streaming digital audio content server 70 that is connected to the host server 40 via a data network 42; and (iii) a wireless earphone 10 that is in communication with the host server 40 via a wireless network 30. The host server 40 is programmed to transmit to the earphone 10 a first network address for the first streaming digital audio content server 70 on the data network 42. The host server 40 and the streaming digital audio content server(s) 70 each may comprise one or more processor circuits and one or more memory circuits (e.g., ROM circuits and/or RAM circuits).

[0053] In yet another embodiment, the present invention is directed to a headset that comprises: (i) a first earphone 10a that comprises one or more acoustic transducers 10b for converting a first electrical signal to sound; and (ii) a second earphone 10b, connected to the first earphone 10a, wherein the second earphone 10b comprises one or more acoustic transducers10b for converting a second electrical signal to sound. In one embodiment, the first earphone 10a

comprises: (i) a first antenna 108; and (ii) a first transceiver circuit 100 in communication with the one or more acoustic transducers 106 of the first earphone 10a and in communication with the first antenna 108. The first transceiver circuit 100 is for receiving and transmitting wireless signals via the first antenna 108, and for outputting the first electrical signal to the one or more acoustic transducers 10b of the first earphone 10a. The first transceiver circuit 100 also may comprise firmware, which when executed by the first transceiver circuit 100, causes the first transceiver circuit 100 to: (i) receive digital audio wirelessly from a data source 20 via an ad hoc wireless network 24 when the data source 20 is in wireless communication range with the first earphone 10a via the ad hoc wireless network 24; and (ii) when the data source 20 is not in wireless communication range with the first earphone 10a via the ad hoc wireless network 24, transition automatically to receive digital audio via an infrastructure wireless network 30.

[0054] In various implementations, the headset further may comprise a head band 19 that is connected to the first and second earphones 10. In addition, the headset 19 further may comprise a microphone 104 having an output connected to the first transceiver circuit 100. In one embodiment, the first transceiver circuit 100 is for outputting the second electrical signal to the one or more acoustic transducers 106 of the second earphone 10b. In another embodiment, the second earphone 10b comprises: (i) a second antenna 108; and (ii) a second transceiver circuit 100 in communication with the one or more acoustic transducers 106 of the second earphone 10b and in communication with the second antenna 108. The second transceiver circuit 100 is for receiving and transmitting wireless signals via the second antenna 108, and for outputting the second electrical signal to the one or more acoustic transducers 106 of the second earphone 10b. The second transceiver circuit 100 may comprise firmware, which when executed by the second transceiver circuit 100, causes the second transceiver circuit 100 to: (i) receive digital audio wirelessly from the data source 20 via the ad hoc wireless network 24 when the data source 20 is in wireless communication range with the second earphone10b via the ad hoc wireless network 24; and (ii) when the data source 20 is not in wireless communication range with the second earphone 10b via the ad hoc wireless network 24, transition automatically to receive digital audio via the infrastructure wireless network 30.

[0055] In addition, according to various embodiments, the first earphone 10a may comprise a first data port and the second earphone 10b may comprise a second data port. In addition, the headset may further comprise an adapter or dongle 150 connected to the first data port of the first

earphone 10a and to the second data port of the second earphone 10b, wherein the adapter 150 comprises an output plug connector 152 for connecting to a remote device.

[0056] In addition, according to other embodiments, the present invention is directed to a method that comprises the steps of: (i) receiving, by a wireless earphone, via an ad hoc wireless network, digital audio from a data source when the data source is in wireless communication with the earphone via the ad hoc wireless network; (ii) converting, by the wireless earphone, the digital audio to sound; and (iii) when the data source is not in wireless communication with the earphone, transitioning automatically, by the earphone, to receive digital audio via an infrastructure wireless network.

[0057] In various implementations, the step of transitioning automatically by the earphone to receive digital audio via an infrastructure wireless network may comprises transitioning automatically to receive digital audio from the data source via an infrastructure wireless network when the data source is not in wireless communication range with the earphone via the ad hoc wireless network. In addition, the method may further comprise the step of receiving by the wireless earphone from the data source via the ad hoc wireless network data regarding one or more infrastructure wireless networks detected by data source when the earphone and the data source are communicating via the ad hoc wireless network.

[0058] In addition, the step of transitioning automatically by the earphone to receive digital audio via an infrastructure wireless network comprises may transitioning automatically to receive digital audio from a host sever via the infrastructure wireless network when the data source is not in wireless communication range with the earphone via the ad hoc wireless network. Additionally, the step of transitioning automatically by the earphone to receive digital audio via an infrastructure wireless network may comprise: (i) receiving, by the wireless earphone via the infrastructure wireless network, from a host server connected to the infrastructure wireless network, a network address for a streaming digital audio content server; and (ii) connecting, by the wireless earphone, to the streaming digital audio content server using the network address received from the host server.

[0059] It is to be understood that the figures and descriptions of the embodiments have been simplified to illustrate elements that are relevant for a clear understanding of the embodiments, while eliminating, for purposes of clarity, other elements. For example, certain operating system details for the various computer-related devices and systems are not described herein. Those of

ordinary skill in the art will recognize, however, that these and other elements may be desirable in a typical processor or computer system. Because such elements are well known in the art and because they do not facilitate a better understanding of the embodiments, a discussion of such elements is not provided herein.

[0060] In general, it will be apparent to one of ordinary skill in the art that at least some of the embodiments described herein may be implemented in many different embodiments of software, firmware and/or hardware. The software and firmware code may be executed by a processor or any other similar computing device. The software code or specialized control hardware that may be used to implement embodiments is not limiting. For example, embodiments described herein may be implemented in computer software using any suitable computer software language type. Such software may be stored on any type of suitable computer-readable medium or media, such as, for example, a magnetic or optical storage medium. The operation and behavior of the embodiments may be described without specific reference to specific software code or specialized hardware components. The absence of such specific references is feasible, because it is clearly understood that artisans of ordinary skill would be able to design software and control hardware to implement the embodiments based on the present description with no more than reasonable effort and without undue experimentation.

[0061] Moreover, the processes associated with the present embodiments may be executed by programmable equipment, such as computers or computer systems and/or processors. Software that may cause programmable equipment to execute processes may be stored in any storage device, such as, for example, a computer system (nonvolatile) memory, an optical disk, magnetic tape, or magnetic disk. Furthermore, at least some of the processes may be programmed when the computer system is manufactured or stored on various types of computer-readable media.

[0062] A "computer," "computer system," "host," "host server," "server," or "processor" may be, for example and without limitation, a processor, microcomputer, minicomputer, server, mainframe, laptop, personal data assistant (PDA), wireless e-mail device, cellular phone, pager, processor, fax machine, scanner, or any other programmable device configured to transmit and/or receive data over a network. Such components may comprise: one or more processor circuits; and one more memory circuits, including ROM circuits and RAM circuits. Computer systems and computer-based devices disclosed herein may include memory for storing certain software applications used in obtaining, processing, and communicating information. It can be

appreciated that such memory may be internal or external with respect to operation of the disclosed embodiments. The memory may also include any means for storing software, including a hard disk, an optical disk, floppy disk, ROM (read only memory), RAM (random access memory), PROM (programmable ROM), EEPROM (electrically erasable PROM) and/or other computer-readable media.

[0063] In various embodiments disclosed herein, a single component may be replaced by multiple components and multiple components may be replaced by a single component to perform a given function or functions. Except where such substitution would not be operative, such substitution is within the intended scope of the embodiments. Any servers described herein, such as the host server 40, for example, may be replaced by a "server farm" or other grouping of networked servers (such as server blades) that are located and configured for cooperative functions. It can be appreciated that a server farm may serve to distribute workload between/among individual components of the farm and may expedite computing processes by harnessing the collective and cooperative power of multiple servers. Such server farms may employ load-balancing software that accomplishes tasks such as, for example, tracking demand for processing power from different machines, prioritizing and scheduling tasks based on network demand and/or providing backup contingency in the event of component failure or reduction in operability.

[0064] While various embodiments have been described herein, it should be apparent that various modifications, alterations, and adaptations to those embodiments may occur to persons skilled in the art with attainment of at least some of the advantages. The disclosed embodiments are therefore intended to include all such modifications, alterations, and adaptations without departing from the scope of the embodiments as set forth herein.

CLAIMS

What is claimed is:

1. An apparatus comprising:

an adapter that is configured to plug into a port of a personal digital audio player; and

a speaker system in communication with the adapter, wherein the speaker system comprises:

multiple acoustic transducers;

a programmable processor circuit that is in communication with the multiple acoustic transducers and the adapter;

a wireless communication circuit that is in communication with the processor circuit, wherein the wireless communication circuit is for communicating via one or more wireless networks; and

wherein:

in a first mode, the processor circuit is for receiving, via the adapter, and processing digital audio content from the personal digital audio player into which the adapter is plugged, and the multiple acoustic transducers are for outputting the received audio content from the personal digital audio player; and

in a second mode, the wireless communication circuit is for receiving digital audio content from a remote digital audio source over a wireless network, the processor circuit is for processing the digital audio content received from the remote digital audio source, and the multiple acoustic transducers are for outputting the audio content received from the remote digital audio source.

ABSTRACT

Apparatus comprises adapter and speaker system. Adapter is configured to plug into port of personal digital audio player. Speaker system is in communication with adapter, and comprises multiple acoustic transducers, programmable processor circuit, and wireless communication circuit. In first operational mode, processor circuit receives, via adapter, and processes digital audio content from personal digital audio player into which adapter is plugged, and the multiple acoustic transducers output the received audio content from the personal digital audio player. In second operational mode, wireless communication circuit receives digital audio content from a remote digital audio source over a wireless network, processor circuit processes the digital audio content received from remote digital audio source, and the multiple acoustic transducers output the audio content received from the remote digital audio source.

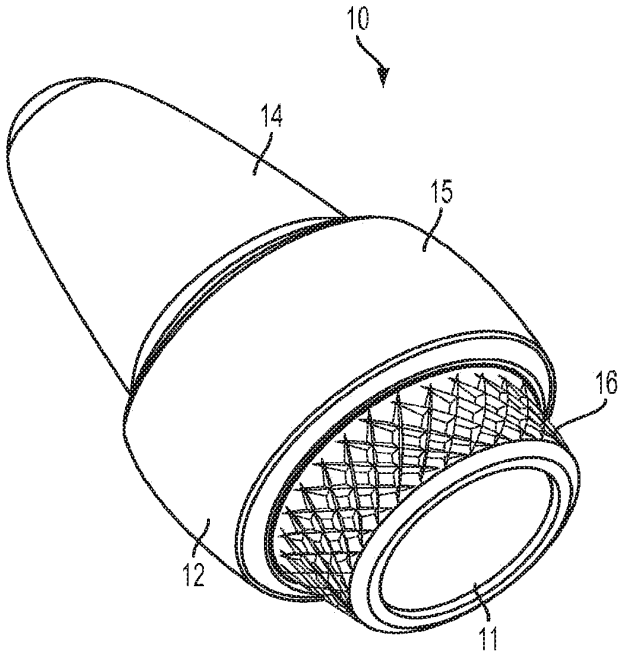

FIG. 1A

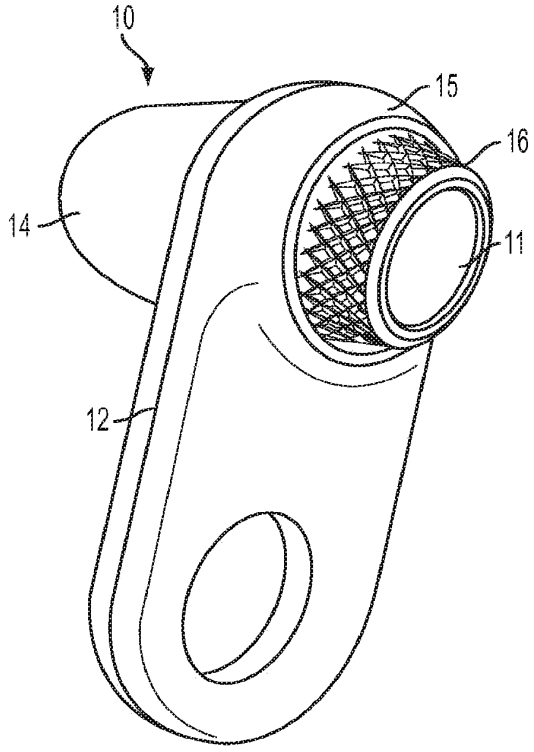

FIG. 1B

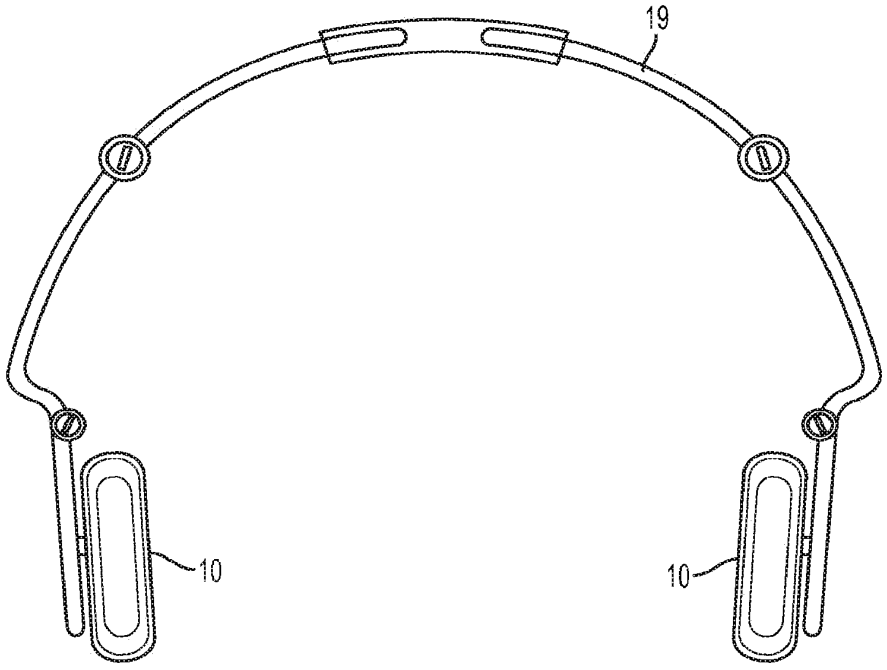

FIG. 1C

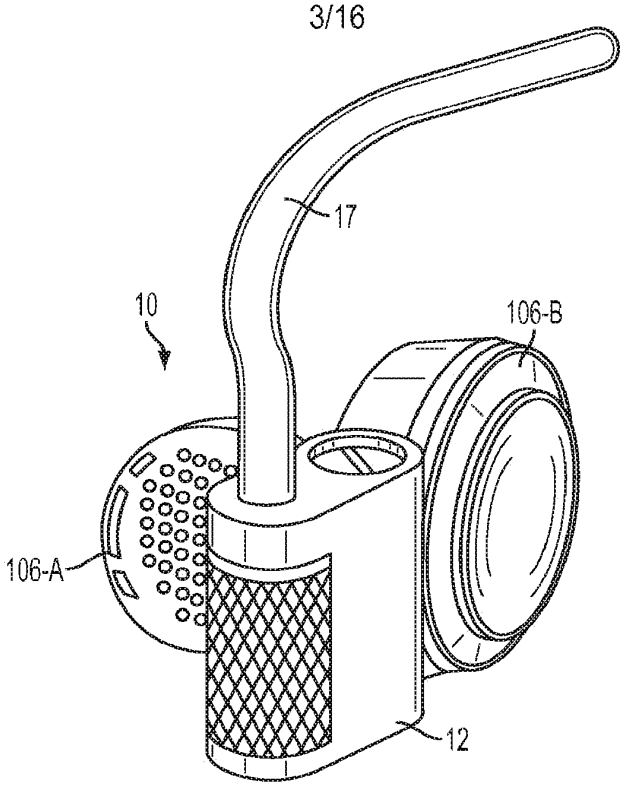

FIG. 1D

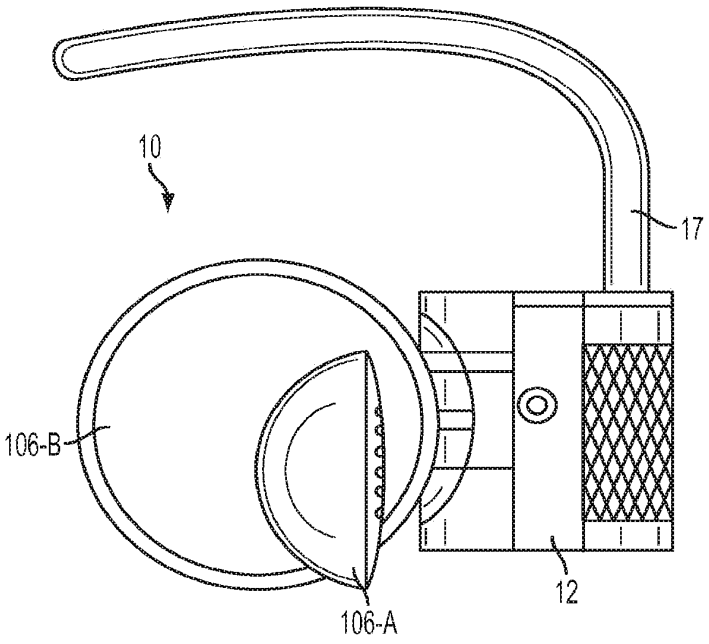

FIG. 1E

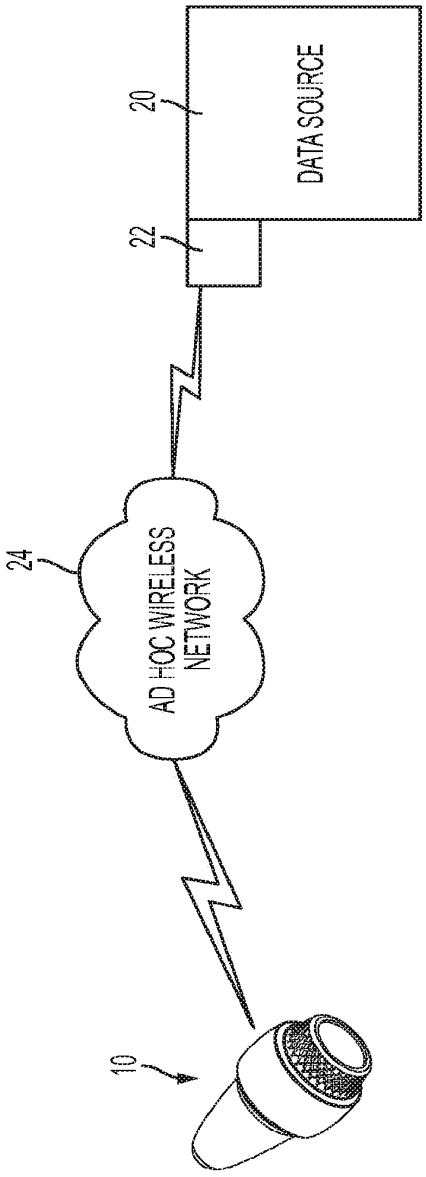

FIG. 2A

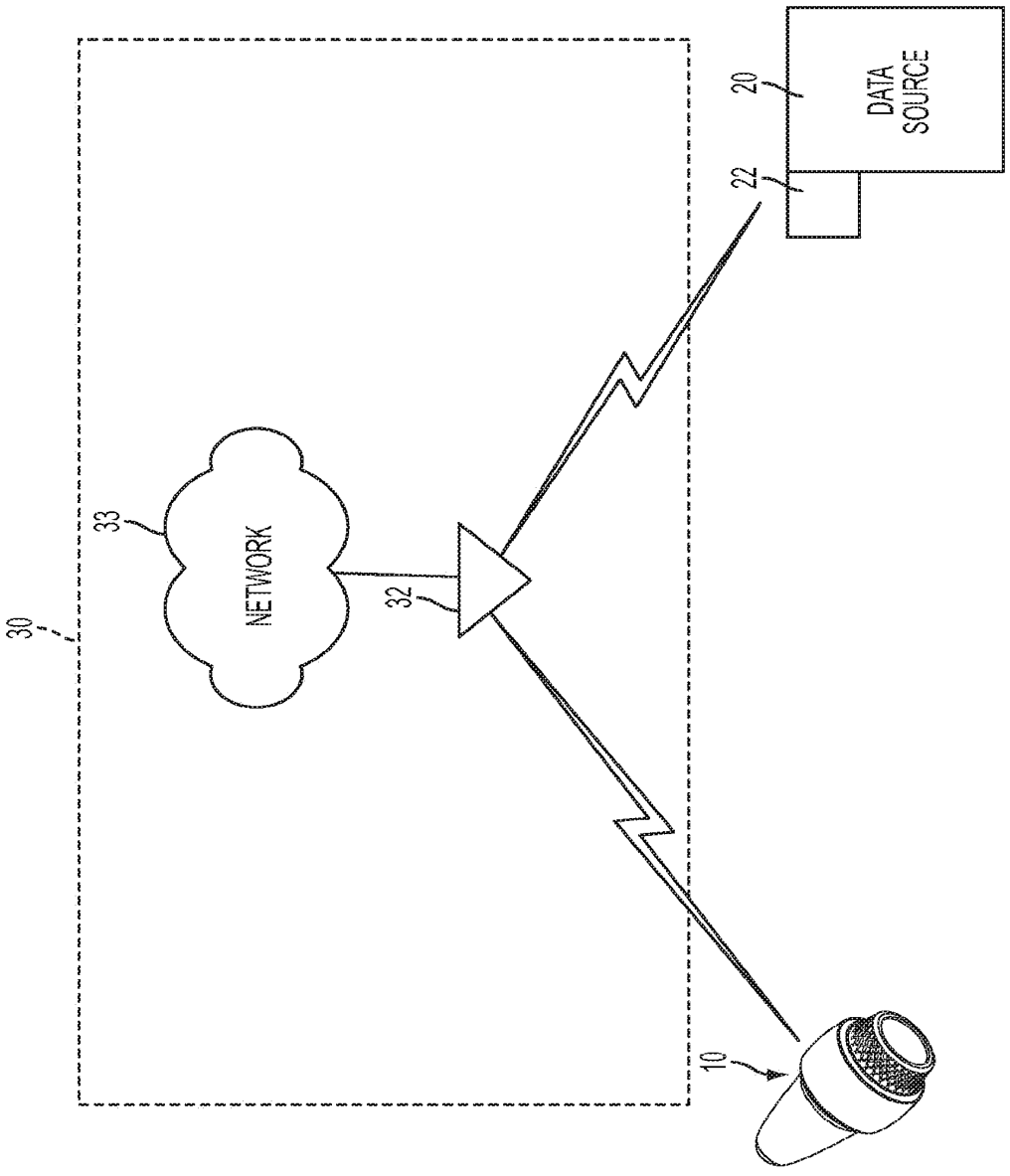

FIG. 2B

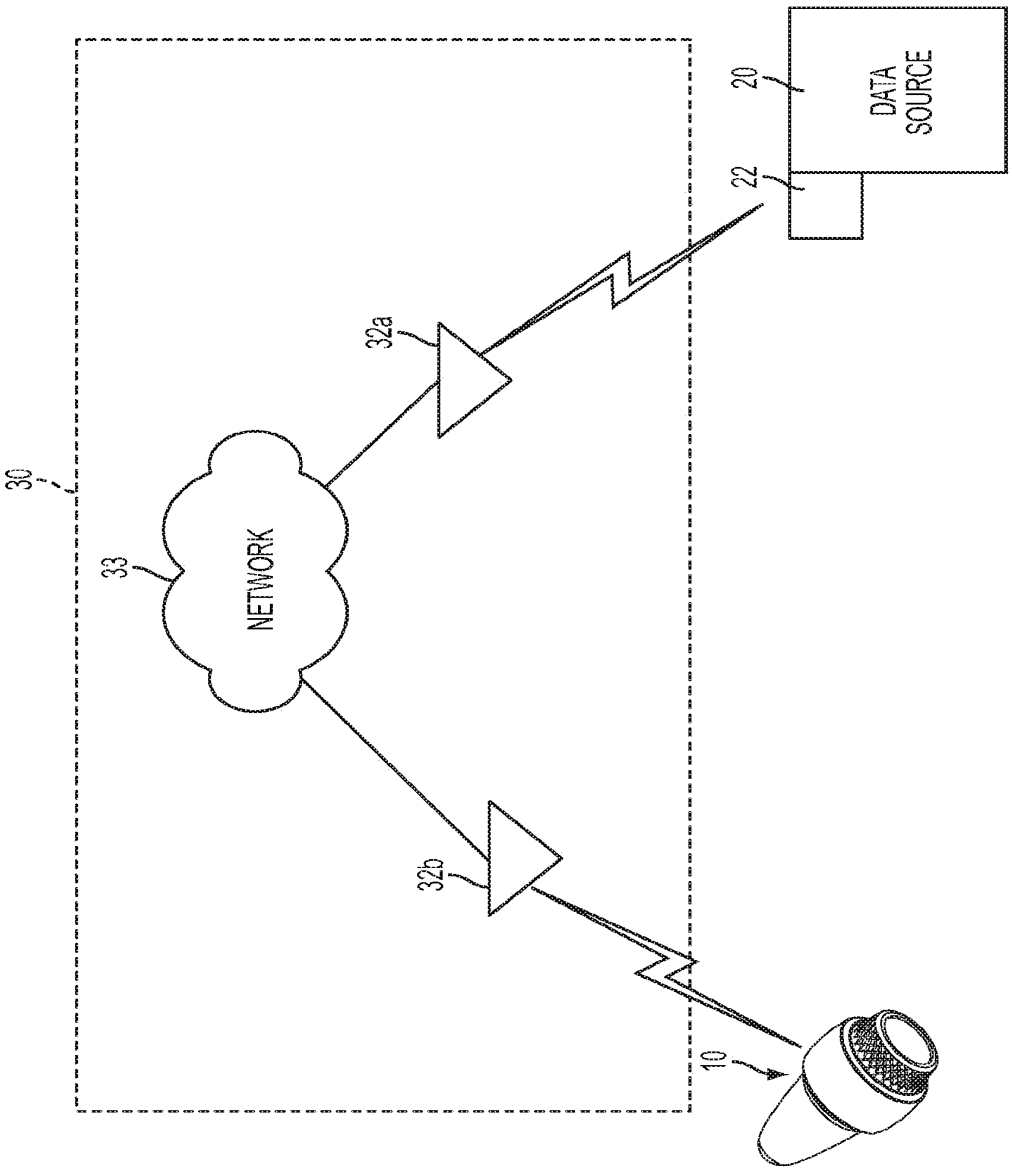

FIG. 2C

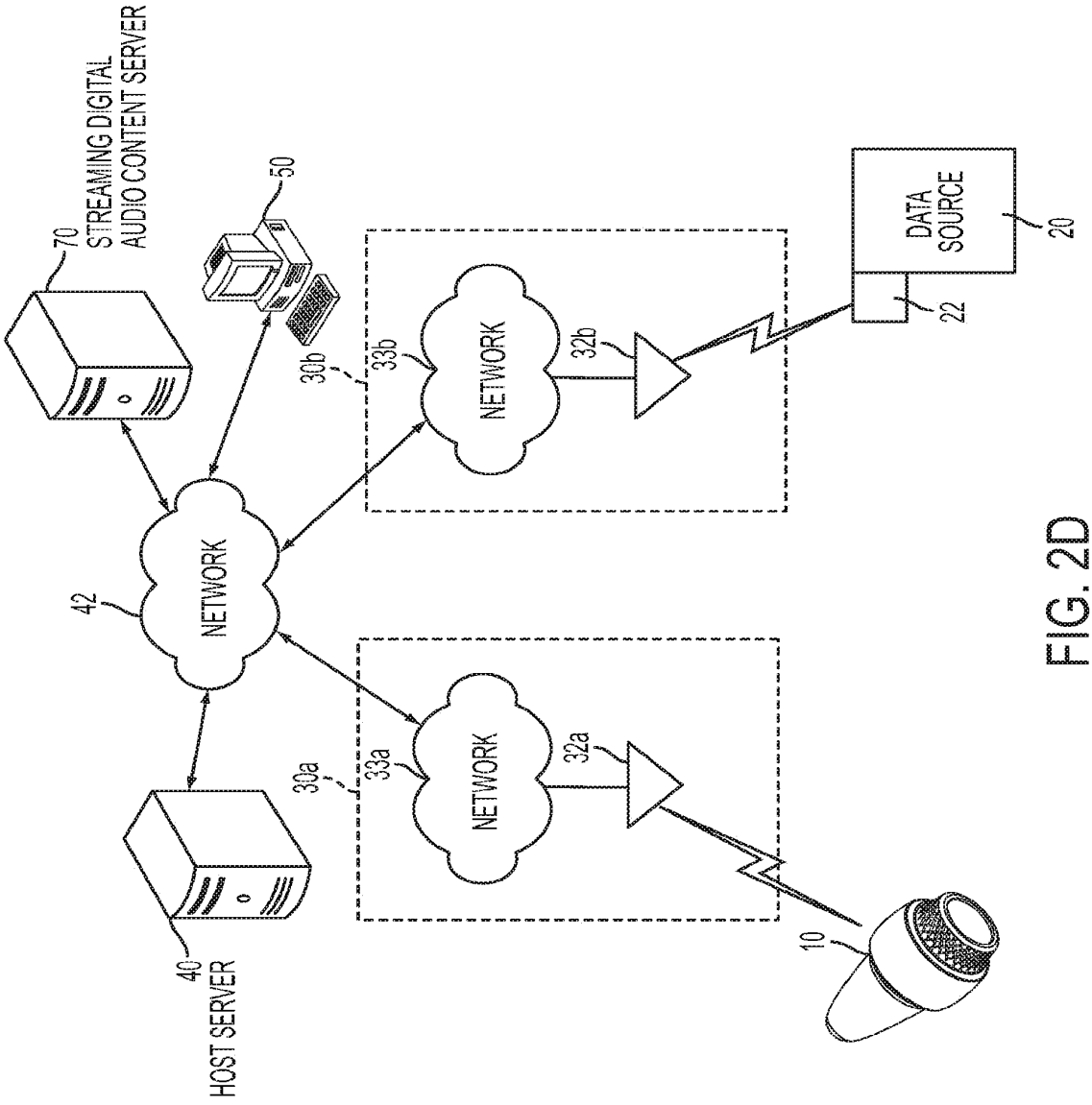
STREAMING DIGITAL AUDIO CONTENT SERVER
70
50
30b
33b
NETWORK
32b
DATA SOURCE
20
22
42
NETWORK
30a
33a
NETWORK
32a
10
40
HOST SERVER

FIG. 2D

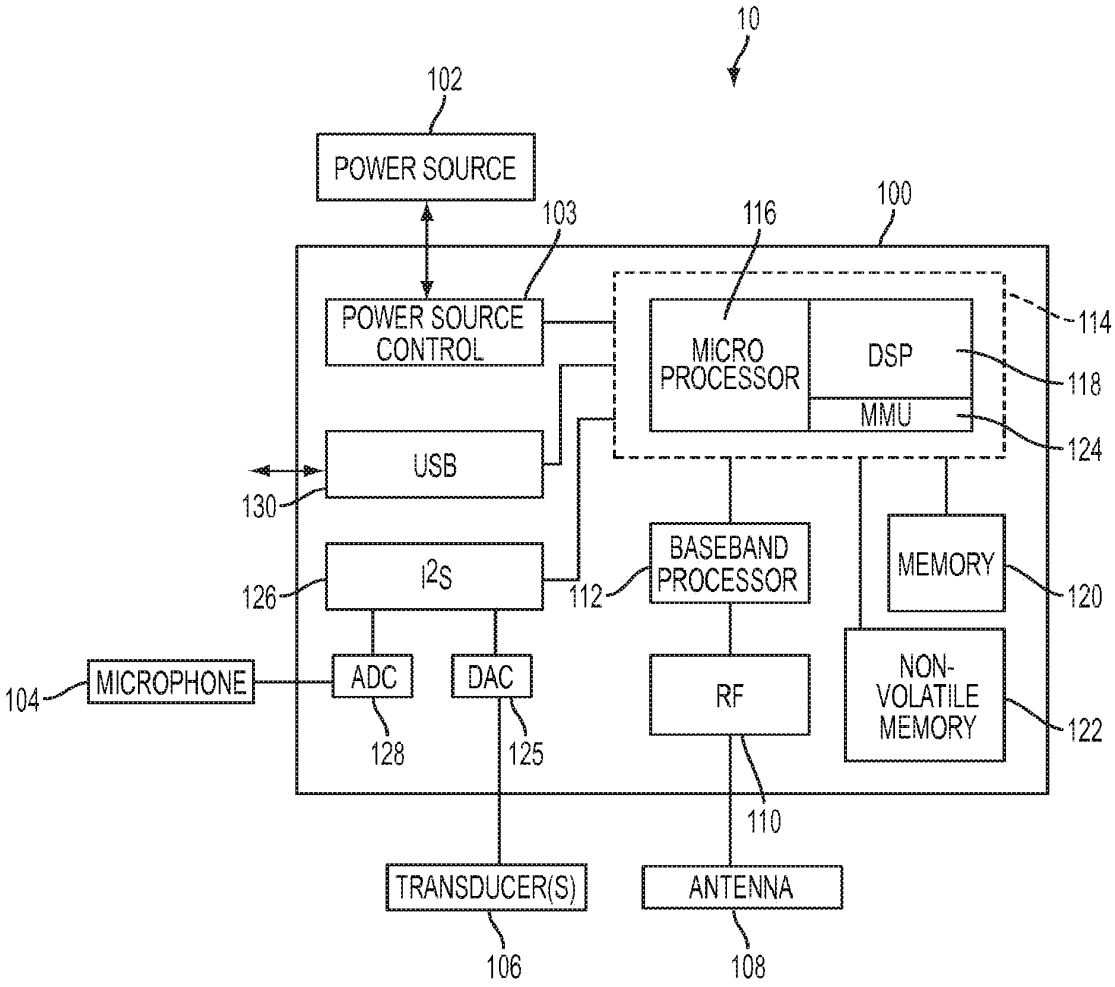
10
102
POWER SOURCE
103
116
100
POWER SOURCE CONTROL
MICRO PROCESSOR
DSP
MMU
114
118
124
USB
130
BASEBAND PROCESSOR
MEMORY
I2S
126
112
120
MICROPHONE
104
ADC
DAC
RF
NON-VOLATILE MEMORY
122
128
125
110
TRANSDUCER(S)
ANTENNA
106
108

FIG. 3

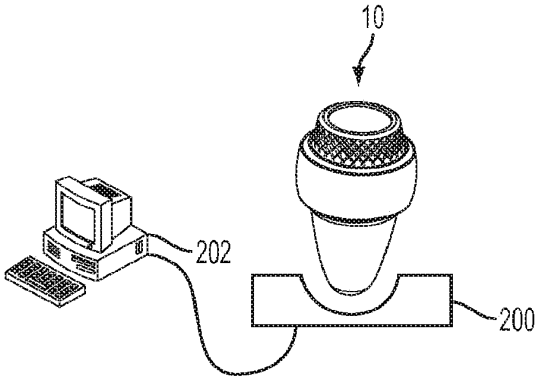

FIG. 4A

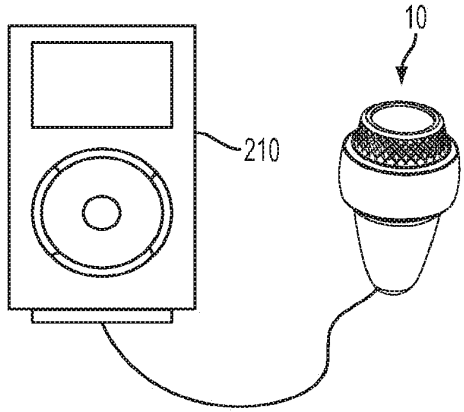

FIG. 4B

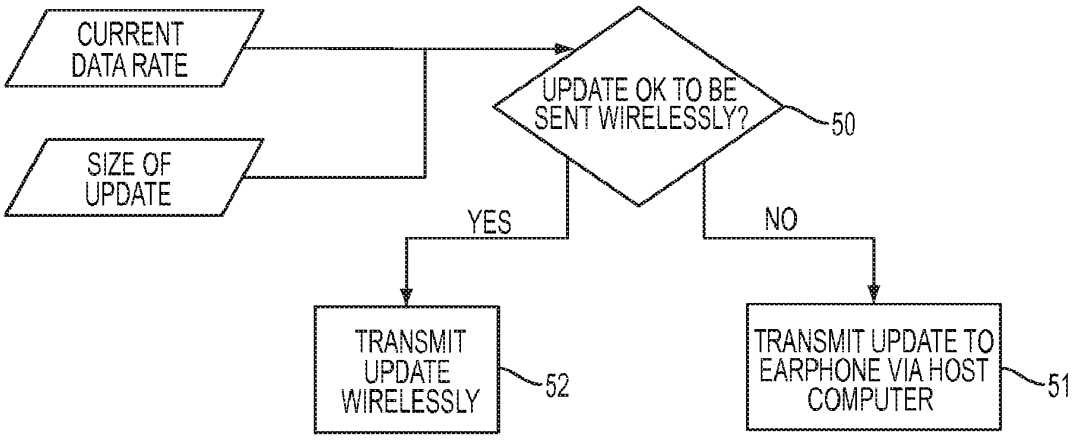
CURRENT DATA RATE
SIZE OF UPDATE
UPDATE OK TO BE SENT WIRELESSLY?
50
YES
NO
TRANSMIT UPDATE WIRELESSLY
52
TRANSMIT UPDATE TO EARPHONE VIA HOST COMPUTER
51

FIG. 5

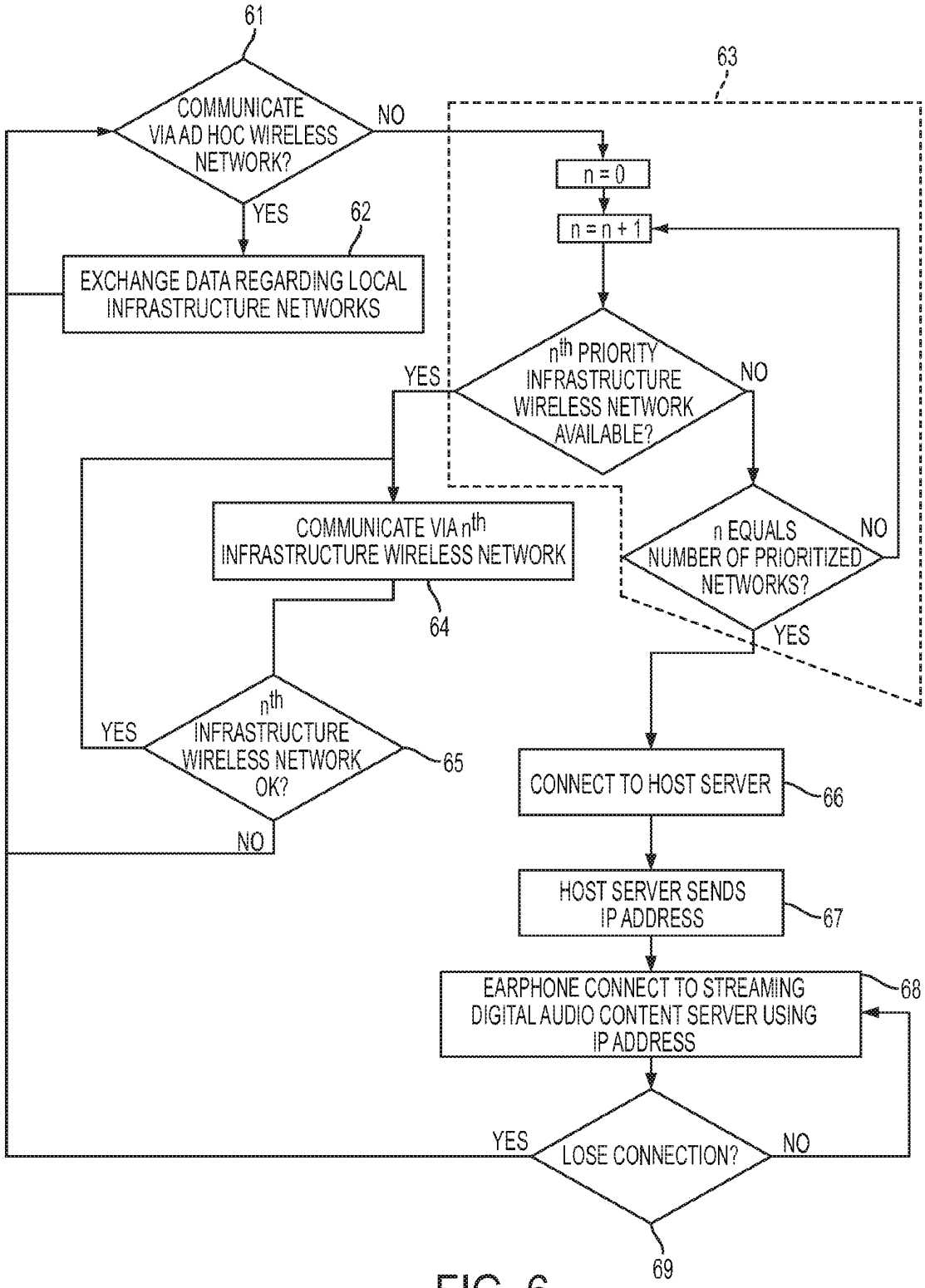
61
COMMUNICATE VIA AD HOC WIRELESS NETWORK?
NO
YES
62
EXCHANGE DATA REGARDING LOCAL INFRASTRUCTURE NETWORKS
63
n = 0
n = n + 1
nth PRIORITY INFRASTRUCTURE WIRELESS NETWORK AVAILABLE?
YES
NO
COMMUNICATE VIA nth INFRASTRUCTURE WIRELESS NETWORK
64
n EQUALS NUMBER OF PRIORITIZED NETWORKS?
NO
YES
nth INFRASTRUCTURE WIRELESS NETWORK OK?
YES
65
NO
CONNECT TO HOST SERVER
66
HOST SERVER SENDS IP ADDRESS
67
EARPHONE CONNECT TO STREAMING DIGITAL AUDIO CONTENT SERVER USING IP ADDRESS
68
YES
LOSE CONNECTION?
NO
69

FIG. 6

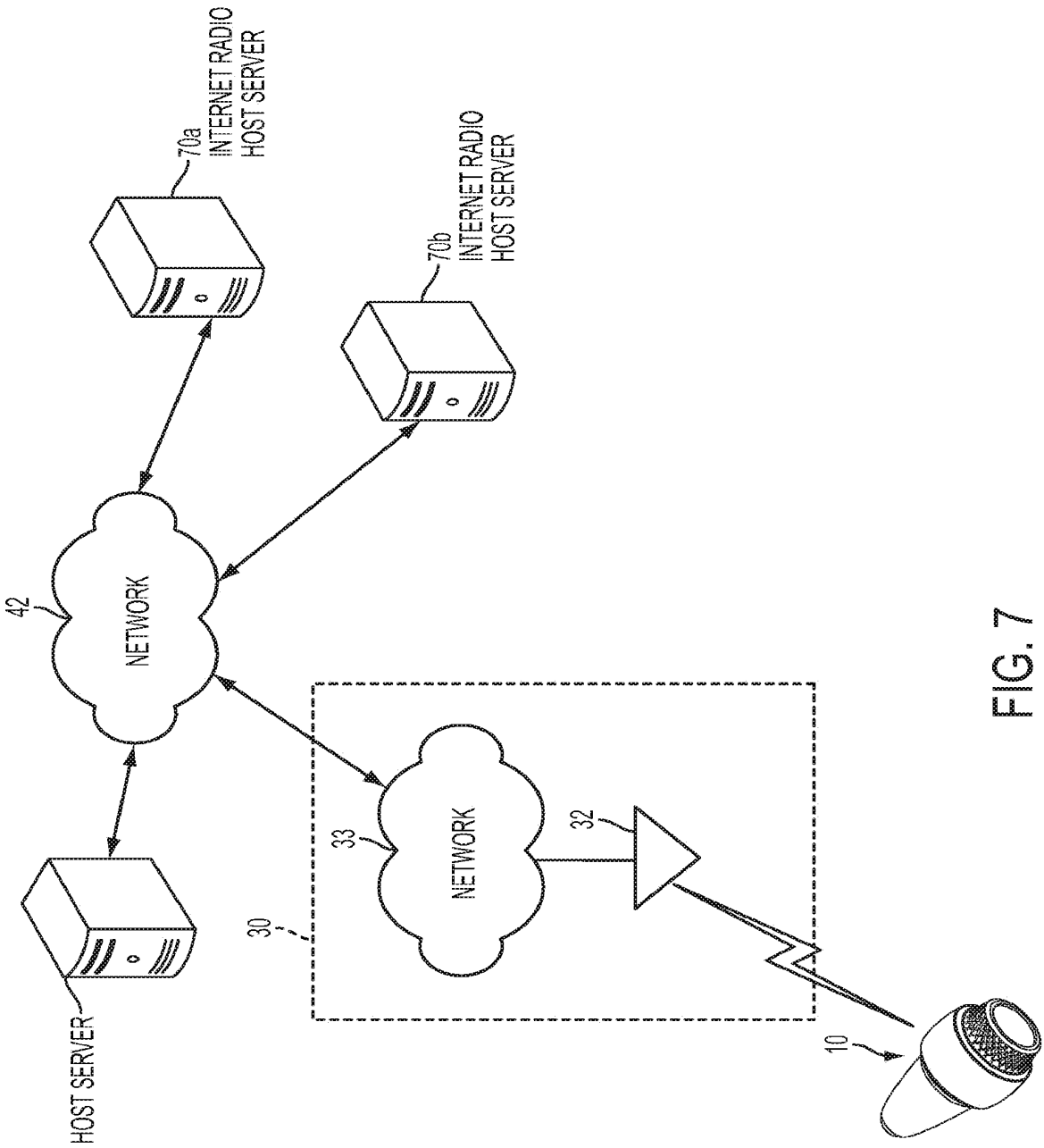
70a
INTERNET RADIO
HOST SERVER
70b
INTERNET RADIO
HOST SERVER
42
NETWORK
33
NETWORK
32
30
HOST SERVER
10

FIG. 7

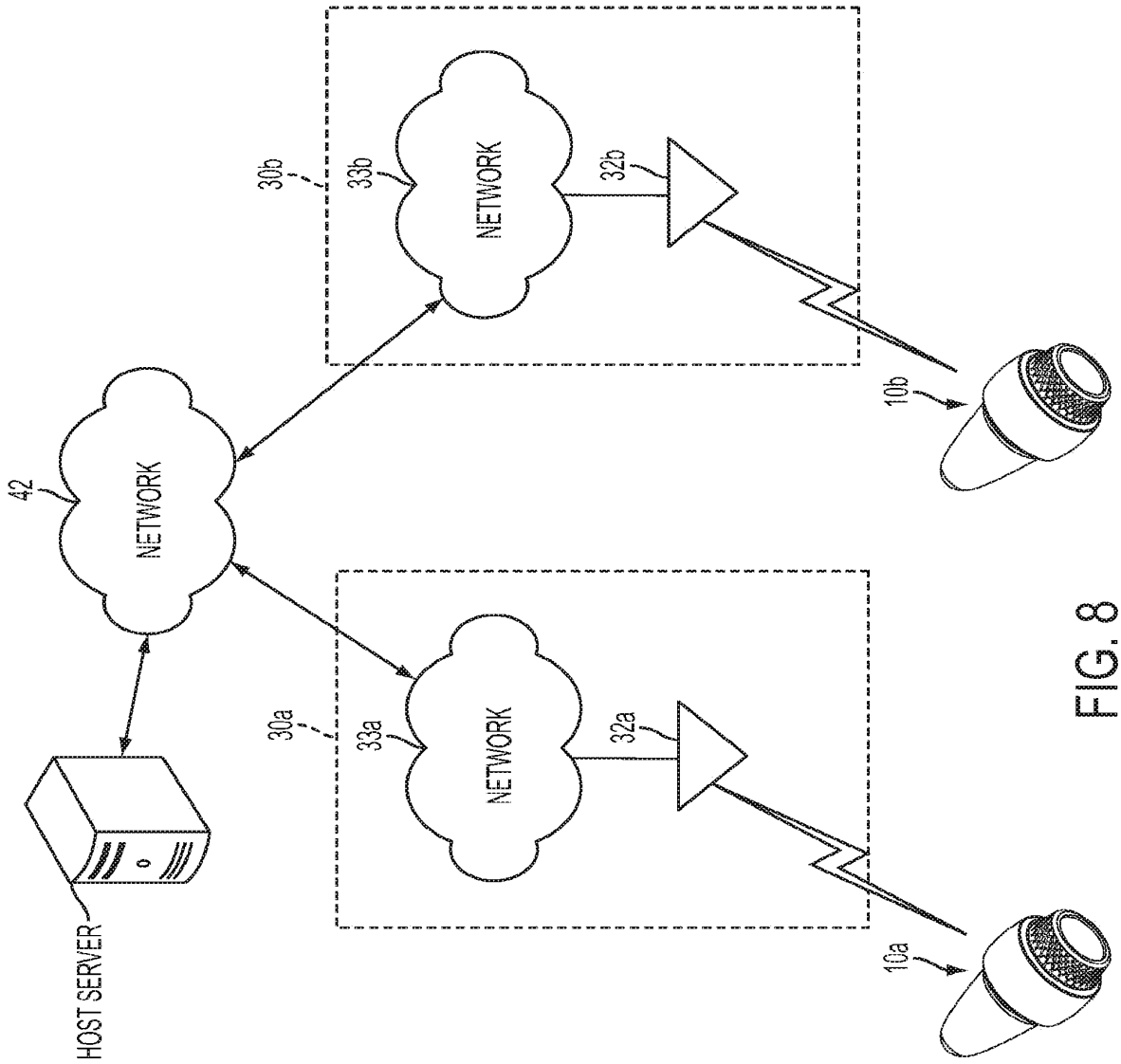
HOST SERVER
42
NETWORK
30a
33a
NETWORK
32a
10a
30b
33b
NETWORK
32b
10b

FIG. 8

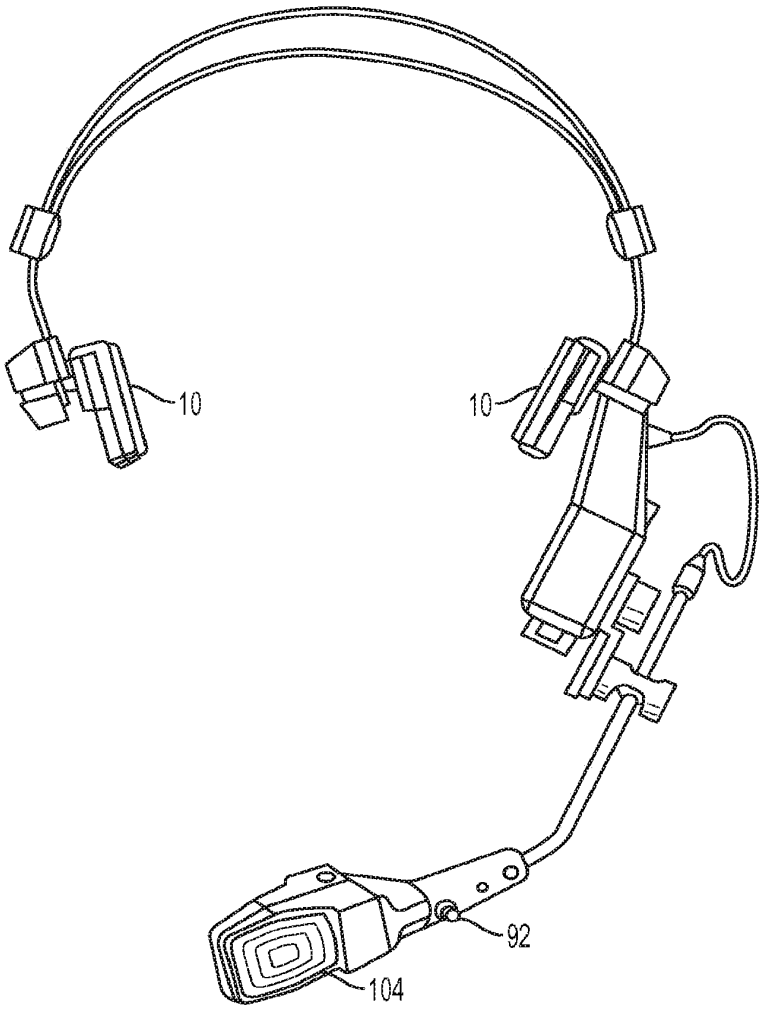

FIG. 9

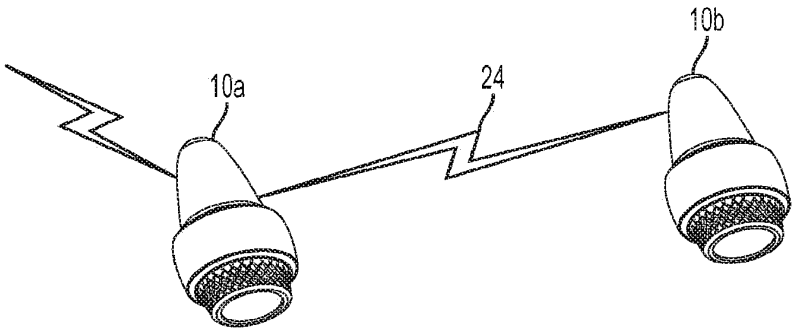

FIG. 10

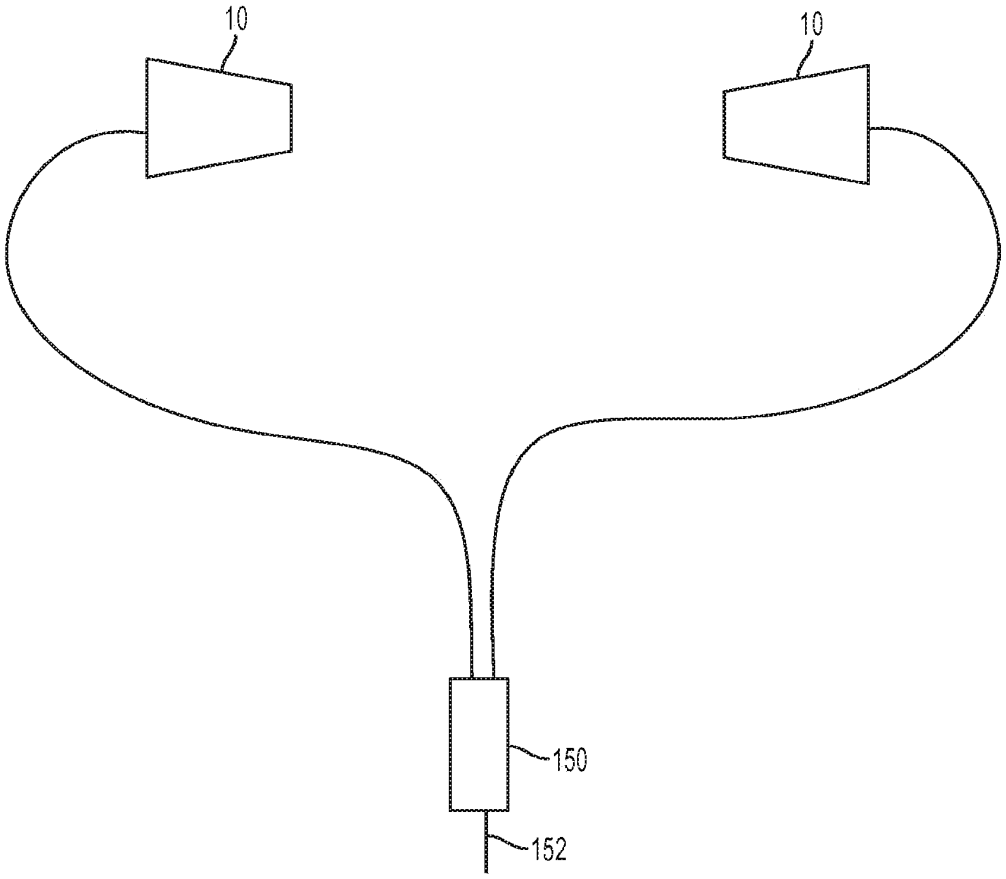

FIG. 11

Doc Code: PA..
Document Description: Power of Attorney

PTO/AIA/82A (07-13)
Approved for use through 11/30/2014. OMB 0651-0051
U.S. Patent and Trademark Office; U.S. DEPARTMENT OF COMMERCE
Under the Paperwork Reduction Act of 1995, no persons are required to respond to a collection of information unless it displays a valid OMB control number.

TRANSMITTAL FOR POWER OF ATTORNEY TO ONE OR MORE REGISTERED PRACTITIONERS

NOTE: This form is to be submitted with the Power of Attorney by Applicant form (PTO/AIA/82B) to identify the application to which the Power of Attorney is directed, in accordance with 37 CFR 1.5, unless the application number and filing date are identified in the Power of Attorney by Applicant form. If neither form PTO/AIA/82A nor form PTO/AIA82B identifies the application to which the Power of Attorney is directed, the Power of Attorney will not be recognized in the application.

Application Number	
Filing Date	
First Named Inventor	Michael J. Koss
Title	SYSTEM WITH WIRELESS EARPHONES
Art Unit	
Examiner Name	
Attorney Docket Number	080188PCTUSCON10

SIGNATURE of Applicant or Patent Practitioner

Signature	/Mark G. Knedeisen/	Date (Optional)	
Name	Mark G. Knedeisen	Registration Number	42,747
Title (if Applicant is a juristic entity)			
Applicant Name (if Applicant is a juristic entity)			

NOTE: This form must be signed in accordance with 37 CFR 1.33. See 37 CFR 1.4(d) for signature requirements and certifications. If more than one applicant, use multiple forms.

☑ *Total of 1 forms are submitted.

This collection of information is required by 37 CFR 1.131, 1.32, and 1.33. The information is required to obtain or retain a benefit by the public which is to file (and by the USPTO to process) an application. Confidentiality is governed by 35 U.S.C. 122 and 37 CFR 1.11 and 1.14. This collection is estimated to take 3 minutes to complete, including gathering, preparing, and submitting the completed application form to the USPTO. Time will vary depending upon the individual case. Any comments on the amount of time you require to complete this form and/or suggestions for reducing this burden, should be sent to the Chief Information Officer, U.S. Patent and Trademark Office, U.S. Department of Commerce, P.O. Box 1450, Alexandria, VA 22313-1450. DO NOT SEND FEES OR COMPLETED FORMS TO THIS ADDRESS. **SEND TO: Commissioner for Patents, P.O. Box 1450, Alexandria, VA 22313-1450.**

If you need assistance in completing the form, call 1-800-PTO-9199 and select option 2.

Doc Code: PA..
Document Description: Power of Attorney

PTO/AIA/82B (07-13)
Approved for use through 11/30/2014. OMB 0651-0051
U.S. Patent and Trademark Office; U.S. DEPARTMENT OF COMMERCE
Under the Paperwork Reduction Act of 1995, no persons are required to respond to a collection of information unless it displays a valid OMB control number

POWER OF ATTORNEY BY APPLICANT

I hereby revoke all previous powers of attorney given in the application identified in either the attached transmittal letter or the boxes below.

Application Number	Filing Date

(Note: The boxes above may be left blank if information is provided on form PTO/AIA/82A.)

☑ I hereby appoint the Patent Practitioner(s) associated with the following Customer Number as my/our attorney(s) or agent(s), and to transact all business in the United States Patent and Trademark Office connected therewith for the application referenced in the attached transmittal letter (form PTO/AIA/82A) or identified above: 26285

OR

☐ I hereby appoint Practitioner(s) named in the attached list (form PTO/AIA/82C) as my/our attorney(s) or agent(s), and to transact all business in the United States Patent and Trademark Office connected therewith for the patent application referenced in the attached transmittal letter (form PTO/AIA/82A) or identified above. (Note: Complete form PTO/AIA/82C.)

Please recognize or change the correspondence address for the application identified in the attached transmittal letter or the boxes above to:

☑ The address associated with the above-mentioned Customer Number

OR

☐ The address associated with Customer Number:

OR

Firm or Individual Name					
Address					
City		State		Zip	
Country					
Telephone		Email			

I am the Applicant (if the Applicant is a juristic entity, list the Applicant name in the box):

Koss Corporation

☐ Inventor or Joint Inventor (title not required below)

☐ Legal Representative of a Deceased or Legally Incapacitated Inventor (title not required below)

☑ Assignee or Person to Whom the Inventor is Under an Obligation to Assign (provide signer's title if applicant is a juristic entity)

☐ Person Who Otherwise Shows Sufficient Proprietary Interest (e.g., a petition under 37 CFR 1.46(b)(2) was granted in the application or is concurrently being filed with this document) (provide signer's title if applicant is a juristic entity)

SIGNATURE of Applicant for Patent

The undersigned (whose title is supplied below) is authorized to act on behalf of the applicant (e.g., where the applicant is a juristic entity).

Signature	[signature]	Date (Optional)	JUNE 9, 2016
Name	Lewis Lillie		
Title	Koss Corporation / VP OPERATIONS		

NOTE: Signature - This form must be signed by the applicant in accordance with 37 CFR 1.33. See 37 CFR 1.4 for signature requirements and certifications. If more than one applicant, use multiple forms.

☑ Total of 1 forms are submitted.

This collection of information is required by 37 CFR 1.131, 1.32, and 1.33. The information is required to obtain or retain a benefit by the public which is to file (and by the USPTO to process) an application. Confidentiality is governed by 35 U.S.C. 122 and 37 CFR 1.11 and 1.14. This collection is estimated to take 3 minutes to complete, including gathering, preparing, and submitting the completed application form to the USPTO. Time will vary depending upon the individual case. Any comments on the amount of time you require to complete this form and/or suggestions for reducing this burden, should be sent to the Chief Information Officer, U.S. Patent and Trademark Office, U.S. Department of Commerce, P.O. Box 1450, Alexandria, VA 22313-1450. DO NOT SEND FEES OR COMPLETED FORMS TO THIS ADDRESS. SEND TO: Commissioner for Patents, P.O. Box 1450, Alexandria, VA 22313-1450.

If you need assistance in completing the form, call 1-800-PTO-9199 and select option 2.