PTO/SB/66 (12-13)
Approved for use through 05/31/2015. OMB 0651-0016
U.S. Patent and Trademark Office: U.S. DEPARTMENT OF COMMERCE
Under the Paperwork Reduction Act of 1995, no persons are required to respond to a collection of information unless it displays valid OMB control number.

PETITION TO ACCEPT UNINTENTIONALLY DELAYED PAYMENT OF MAINTENANCE FEE IN AN EXPIRED PATENT (37 CFR 1.378(b))

Patent Number	Issue Date (YYYY-MM-DD)	Application Number	Filing Date (YYYY-MM-DD)	Docket Number (if applicable)
8458784	2013-06-04	12807641	2010-09-10	802-001C

CAUTION: Maintenance fee payment must correctly identify: (1) the patent number and (2) the application number of the actual U.S. application leading to issuance of that patent to ensure the fee(s) is/are associated with the correct patent. 37 CFR 1.366(c) and (d).

SMALL ENTITY

☒ Patentee claims, or has previously claimed, small entity status. See 37 CFR 1.27.

LOSS OF ENTITLEMENT TO SMALL ENTITY STATUS

☐ Patentee is no longer entitled to small entity status. See 37 CFR 1.27(g)

NOT Small Entity

Fee	Code
○ 3 ½ year	(1551)
○ 7 ½ year	(1552)
○ 11 ½ year	(1553)

Small Entity

Fee	Code
◉ 3 ½ year	(2551)
○ 7 ½ year	(2552)
○ 11 ½ year	(2553)

PETITION FEE

The petition fee required by 37 CFR 1.17(m) (Fee Code 1558 /2558) must be paid as a condition of accepting unintentionally delayed payment of the maintenance fee.

MAINTENANCE FEE (37 CFR 1.20(e)-(g))

The appropriate maintenance fee must be submitted with this petition.

STATEMENT

THE UNDERSIGNED CERTIFIES THAT THE DELAY IN PAYMENT OF THE MAINTENANCE FEE TO THIS PATENT WAS UNINTENTIONAL

PETITIONER(S) REQUEST THAT THE DELAYED PAYMENT OF THE MAINTENANCE FEE BE ACCEPTED AND THE PATENT REINSTATED

THIS PORTION MUST BE COMPLETED BY THE SIGNATORY OR SIGNATORIES

37 CFR 1.378(c) states: "Any petition under this section must be signed in compliance with 37 CFR 1.33(b)."

I certify, in accordance with 37 CFR 1.4(d)(4) that I am

- ◉ An attorney or agent registered to practice before the Patent and Trademark Office
- ○ A sole patentee
- ○ A joint patentee; I certify that I am authorized to sign this submission on behalf of all the other patentees as evidenced by the power of attorney in the application
- ○ A joint patentee; all of whom are signing this e-petition
- ○ The assignee of record of the entire interest that qualifies as an authorized party under 37 CFR 1.33(b)

Patent Practitioner			
A signature of the applicant or representative is required in accordance with 37 CFR 1.33 and 10.18. Please see 37 CFR 1.4(d) for the form of the signature			
Signature	/alan r loudermilk/	Date (YYYY-MM-DD)	2017-09-29
Name	Alan R Loudermilk	Registration Number	32788

This collection of information is required by 37 CFR 1.378(b). The information is required to obtain or retain a benefit by the public which is to file (and by the USPTO to process) an application. Confidentiality is governed by 35 U.S.C. 122 and 37 CFR 1.11 and 1.14. This collection is estimated to take 1 hour to complete, including gathering, preparing, and submitting the completed application form to the USPTO. Time will vary depending upon the individual case. Any comments on the amount of time you require to complete this form and/or suggestions for reducing this burden, should be sent to the Chief Information Officer, U.S. Patent and Trademark Office, U.S. Department of Commerce, P.O. Box 1450, Alexandria, VA 22313-1450. DO NOT SEND FEES OR COMPLETED FORMS TO THIS ADDRESS. **This form can only be used when in conjunction with EFS-Web. If this form is mailed to the USPTO, it may cause delays in reinstating the patent.**

Privacy Act Statement

The Privacy Act of 1974 (P.L. 93-579) requires that you be given certain information in connection with your submission of the attached form related to a patent application or patent. Accordingly, pursuant to the requirements of the Act, please be advised that: (1) the general authority for the collection of this information is 35 U.S.C. 2(b)(2); (2) furnishing of the information solicited is voluntary; and (3) the principal purpose for which the information is used by the U.S. Patent and Trademark Office is to process and/or examine your submission related to a patent application or patent. If you do not furnish the requested information, the U.S. Patent and Trademark Office may not be able to process and/or examine your submission, which may result in termination of proceedings or abandonment of the application or expiration of the patent.

The information provided by you in this form will be subject to the following routine uses:

1. The information on this form will be treated confidentially to the extent allowed under the Freedom of Information Act (5 U.S.C. 552) and the Privacy Act (5 U.S.C. 552a). Records from this system of records may be disclosed to the Department of Justice to d etermine whether the Freedom of Information Act requires disclosure of these records.

2. A record from this system of records may be disclosed, as a routine use, in the course of presenting evidence to a court, magistrate, or administrative tribunal, including disclosures to opposing counsel in the course of settlement negotiations.

3. A record in this system of records may be disclosed, as a routine use, to a Member of Congress submitting a request involving an individual, to whom the record pertains, when the individual has requested assistance from the Member with respect to the subject matter of the record.

4. A record in this system of records may be disclosed, as a routine use, to a contractor of the Agency having need for the information in order to perform a contract. Recipients of information shall be required to comply with the requirements of the Privacy Act of 1974, as amended, pursuant to 5 U.S.C. 552a(m).

5. A record related to an In ternational Application filed under the Patent Cooperation Treaty in this system of records may be disclosed, as a routine use, to the International Bureau of the World Intellectual Property Organization, pursuant to the Patent Cooperation Treaty.

6. A record in this system of records may be disclosed, as a routine use, to another federal agency for purposes of National Security review (35 U.S.C. 181) and for review pursuant to the Atomic Energy Act (42 U.S.C. 218(c)).

7. A record from this system of records may be disclosed, as a routine use, to the Administrator, General Services, or his/her designee, during an inspection of records conducted by GSA as part of that agency's responsibility to recommend improvements in records management practices and programs, under authority of 44 U.S.C. 2904 and 2906. Such disclosure shall be made in accordance with the GSA regulations governing inspection of records for this purpose, and any other relevant (i.e., GSA or Commerce) directive. Such disclosure shall not be used to make determinations about individuals.

8. A record from this system of records may be disclosed, as a routine use, to the public after either publication of the application pursuant to 35 U.S.C. 122(b) or issuance of a patent pursuant to 35 U.S.C. 151. Further, a record may be disclosed, subject to the limitations of 37 CFR 1.14, as a routine use, to the public if the record was filed in an application which became abandoned or in which the proceedings were terminated and which application is referenced by either a published application, an application open to public inspections or an issued patent.

9. A record from this system of records may be disclosed, as a routine use, to a Federal, State, or local law enforcement agency, if the USPTO becomes aware of a violation or potential violation of law or regulation.

Electronic Patent Application Fee Transmittal

Application Number:	12807641
Filing Date:	10-Sep-2010
Title of Invention:	DATA PROTECTION SYSTEM SELECTIVELY ALTERING AN END PORTION OF PACKETS BASED ON INCOMPLETE DETERMINATION OF WHETHER A PACKET IS VALID OR INVALID
First Named Inventor/Applicant Name:	Andrew K. Krumel
Filer:	Alan R Loudermilk
Attorney Docket Number:	802-001C

Filed as Small Entity

Filing Fees for Utility under 35 USC 111(a)

Description	Fee Code	Quantity	Amount	Sub-Total in USD($)
Basic Filing:				
MAINTENANCE FEE DUE AT 3.5 YEARS	2551	1	800	800
PET. DELAY PYMT MAINTAIN PATENT IN FORCE	2558	1	850	850
Pages:				
Claims:				
Miscellaneous-Filing:				
Petition:				
Patent-Appeals-and-Interference:				

Description	Fee Code	Quantity	Amount	Sub-Total in USD($)
Post-Allowance-and-Post-Issuance:				
Extension-of-Time:				
Miscellaneous:				
		Total in USD ($)		**1650**

UNITED STATES PATENT AND TRADEMARK OFFICE

Commissioner for Patents
United States Patent and Trademark Office
P.O. Box 1450
Alexandria, VA 22313-1450
www.uspto.gov

In re Patent No. 8458784
Issue Date: June 4,2013
Application No. 12807641
Filed: September 10,2010
Attorney Docket No. 802-001C

:
:DECISION GRANTING PETITION
:UNDER 37 CFR 1.378(b)
:

This is a decision on the electronic petition, filed September 29,2017 ,under 37 CFR 1.378(b) to accept the unintentionally delayed payment of the 3.5 year maintenance fee for the above-identified patent.

The petition is **GRANTED**.

The maintenance fee is accepted, and the above-identified patent reinstated as of September 29,2017 . This decision also constitutes notice that the fee has been accepted. An electronic copy of the petition and this decision has been created as an entry in the Image File Wrapper. Nevertheless, petitioner should print and retain an independent copy.

Telephone inquiries related to this electronic decision should be directed to the Electronic Business Center at 1-866-217-9197.

Electronic Acknowledgement Receipt	
EFS ID:	30523547
Application Number:	12807641
Patent Number:	8458784
Confirmation Number:	3474
Petition Issued Date:	September 29,2017
Title of Invention:	DATA PROTECTION SYSTEM SELECTIVELY ALTERING AN END PORTION OF PACKETS BASED ON INCOMPLETE DETERMINATION OF WHETHER A PACKET IS VALID OR INVALID
First Named Inventor/Applicant Name:	Andrew K. Krumel
Customer Number:	107299
Filer:	Alan R Loudermilk
Filer Authorized By:	
Attorney Docket Number:	802-001C
Receipt Date:	29-SEP-2017
Filing Date:	10-SEP-2010
Time Stamp:	15:35:25
Application Type:	Utility under 35 USC 111(a)

Payment information:

Submitted with Payment	yes
Payment Type	CARD
Payment was successfully received in RAM	$1650
RAM confirmation Number	100217INTEFSW15362900
Deposit Account	
Authorized User	
The Director of the USPTO is hereby authorized to charge indicated fees and credit any overpayment as follows:	

File Listing:

Document Number	Document Description	File Name	File Size(Bytes)/ Message Digest	Multi Part /.zip	Pages (if appl.)
1	Petition automatically granted by EFS	sb0066e_fill802001C.pdf	765020 990410db545772cba9e6a1cfde6301cdf61a5868	no	3
Warnings:					
Information:					
2	Fee Worksheet (SB06)	fee-info.pdf	32130 52d92d7a48c97aa5579505dce0f9c5523804fd7e	no	2
Warnings:					
Information:					
		Total Files Size (in bytes):	797150		

This Acknowledgement Receipt evidences receipt on the noted date by the USPTO of the indicated documents, characterized by the applicant, and including page counts, where applicable. It serves as evidence of receipt similar to a Post Card, as described in MPEP 503.

New Applications Under 35 U.S.C. 111
If a new application is being filed and the application includes the necessary components for a filing date (see 37 CFR 1.53(b)-(d) and MPEP 506), a Filing Receipt (37 CFR 1.54) will be issued in due course and the date shown on this Acknowledgement Receipt will establish the filing date of the application.
National Stage of an International Application under 35 U.S.C. 371
If a timely submission to enter the national stage of an international application is compliant with the conditions of 35 U.S.C. 371 and other applicable requirements a Form PCT/DO/EO/903 indicating acceptance of the application as a national stage submission under 35 U.S.C. 371 will be issued in addition to the Filing Receipt, in due course.
New International Application Filed with the USPTO as a Receiving Office
If a new international application is being filed and the international application includes the necessary components for an international filing date (see PCT Article 11 and MPEP 1810), a Notification of the International Application Number and of the International Filing Date (Form PCT/RO/105) will be issued in due course, subject to prescriptions concerning national security, and the date shown on this Acknowledgement Receipt will establish the international filing date of the application.

UNITED STATES PATENT AND TRADEMARK OFFICE

UNITED STATES DEPARTMENT OF COMMERCE
United States Patent and Trademark Office
Address: COMMISSIONER FOR PATENTS
P.O. Box 1450
Alexandria, Virginia 22313-1450
www.uspto.gov

APPLICATION NO.	ISSUE DATE	PATENT NO.	ATTORNEY DOCKET NO.	CONFIRMATION NO.
12/807,641	06/04/2013	8458784	802-001C	3474

107299 7590 05/15/2013

Alan R. Loudermilk
511 N. Washington Ave
Marshall, TX 75670

ISSUE NOTIFICATION

The projected patent number and issue date are specified above.

Determination of Patent Term Adjustment under 35 U.S.C. 154 (b)
(application filed on or after May 29, 2000)

The Patent Term Adjustment is 0 day(s). Any patent to issue from the above-identified application will include an indication of the adjustment on the front page.

If a Continued Prosecution Application (CPA) was filed in the above-identified application, the filing date that determines Patent Term Adjustment is the filing date of the most recent CPA.

Applicant will be able to obtain more detailed information by accessing the Patent Application Information Retrieval (PAIR) WEB site (http://pair.uspto.gov).

Any questions regarding the Patent Term Extension or Adjustment determination should be directed to the Office of Patent Legal Administration at (571)-272-7702. Questions relating to issue and publication fee payments should be directed to the Application Assistance Unit (AAU) of the Office of Data Management (ODM) at (571)-272-4200.

APPLICANT(s) (Please see PAIR WEB site http://pair.uspto.gov for additional applicants):

Andrew K. Krumel, San Jose, CA;

The United States represents the largest, most dynamic marketplace in the world and is an unparalleled location for business investment, innovation, and commercialization of new technologies. The USA offers tremendous resources and advantages for those who invest and manufacture goods here. Through SelectUSA, our nation works to encourage and facilitate business investment. To learn more about why the USA is the best country in the world to develop technology, manufacture products, and grow your business, visit SelectUSA.gov.

Form PTO-1449 (REV. 7-92)

U.S. DEPARTMENT OF COMMERCE
Patent and Trademark Office

INFORMATION DISCLOSURE STATEMENT BY APPLICANT

(Use several sheets if necessary)

OPAP IAP7 APR 08 2011 PATENT & TRADEMARK OFFICE

Changes applied to document, /N.M./ 2/13/2013

Attorney's Docket Number	Serial No.
802-001C	12/807,641
Applicant(s): KRUMEL	
Filing Date: 9/10/10	Group Art Unit: 2134

U.S. PATENT DOCUMENTS

*EXAMINER INITIAL	DOCUMENT NUMBER							DATE	NAME	CLASS	SUBCLASS	FILING DATE IF APPROPRIATE
	5	3	4	3	4	7	1	08-1994	Cassagnol	370	401	
	5	4	2	6	3	7	8	6/20/95	Ong	326	39	
	5	4	2	6	3	7	9	06-1995	Trimberger	326	39	
	5	5	3	0	6	9	5	06-1996	Dighe	370	232	
	5	5	9	0	0	6	0	12-1996	Granville	702	155	
	5	6	5	7	3	1	6	08-1997	Nakagaki	370	394	
	5	7	4	0	3	7	5	4/14/98	Dunne et al.	395	200.68	
	5	7	4	5	2	2	9	04-1998	~~June~~ Jung et al.	356	73	
	5	7	9	4	0	3	3	8/11/98	Aldebert et al.	395	653	
	5	8	3	5	7	2	6	11/10/98	Shwed et al.	395	200.59	
	5	8	8	4	0	2	5	3/16/99	Baehr et al.	395	187.01	
	5	9	0	3	5	6	6	05-1999	Flammer	370	406	
	5	9	0	5	8	5	9	05-1999	Holloway	713	201	
	5	9	6	8	1	7	6	10/19/99	Nessett et al.	713	201	
	5	9	7	4	5	4	7	10-1999	Klimenko	713	2	
	6	0	0	3	1	3	3	12/14/99	Moughanni et al.	713	200	
	6	0	0	9	4	7	5	12/28/99	Shrader	709	249	
	6	0	2	0	7	5	8	02-2000	Patel	326	40	
	6	0	7	6	1	6	8	06-2000	Fiveash	713	201	
	6	0	1	1	7	9	7	01-2000	Sugawara	370	395.51	
	6	0	4	9	2	2	2	4/11/00	Lawmann	326	38	
	6	0	5	2	7	8	5	04-2000	Lin	709	225	
	6	0	5	2	7	8	8	04-2000	Wesinger	713	201	

EXAMINER	DATE CONSIDERED

*EXAMINER: Initial if citation considered, whether or not citation is in conformance with MPEP § 609. Draw line through citation if not in conformance and not considered. Include copy of this form with next communication to applicant.

ALL REFERENCES CONSIDERED EXCEPT WHERE LINED THROUGH. /M.S./

UNITED STATES PATENT AND TRADEMARK OFFICE

UNITED STATES DEPARTMENT OF COMMERCE
United States Patent and Trademark Office
Address: COMMISSIONER FOR PATENTS
P.O. Box 1450
Alexandria, Virginia 22313-1450
www.uspto.gov

APPLICATION NUMBER	FILING or 371(c) DATE	GRP ART UNIT	FIL FEE REC'D	ATTY.DOCKET.NO	TOT CLAIMS	IND CLAIMS
12/807,641	09/10/2010	2493	1170	802-001C	30	1

CONFIRMATION NO. 3474

CORRECTED FILING RECEIPT

107299
Alan R. Loudermilk
511 N. Washington Ave
Marshall, TX 75670

OC000000061038103

Date Mailed: 05/07/2013

Receipt is acknowledged of this non-provisional patent application. The application will be taken up for examination in due course. Applicant will be notified as to the results of the examination. Any correspondence concerning the application must include the following identification information: the U.S. APPLICATION NUMBER, FILING DATE, NAME OF APPLICANT, and TITLE OF INVENTION. Fees transmitted by check or draft are subject to collection. Please verify the accuracy of the data presented on this receipt. **If an error is noted on this Filing Receipt, please submit a written request for a Filing Receipt Correction. Please provide a copy of this Filing Receipt with the changes noted thereon. If you received a "Notice to File Missing Parts" for this application, please submit any corrections to this Filing Receipt with your reply to the Notice. When the USPTO processes the reply to the Notice, the USPTO will generate another Filing Receipt incorporating the requested corrections**

Inventor(s)

Andrew K. Krumel, San Jose, CA;

Applicant(s)

Andrew K. Krumel, San Jose, CA;

Power of Attorney:
Alan Loudermilk--32788

Domestic Priority data as claimed by applicant

This application is a CON of 11/374,465 03/13/2006 ABN
which is a CON of 09/611,775 07/07/2000 PAT 7013482

Foreign Applications for which priority is claimed (You may be eligible to benefit from the **Patent Prosecution Highway** program at the USPTO. Please see http://www.uspto.gov for more information.) - None.
Foreign application information must be provided in an Application Data Sheet in order to constitute a claim to foreign priority. See 37 CFR 1.55 and 1.76.

If Required, Foreign Filing License Granted: 10/15/2010

The country code and number of your priority application, to be used for filing abroad under the Paris Convention, is **US 12/807,641**

Projected Publication Date: Not Applicable

Non-Publication Request: No

Early Publication Request: No
** **SMALL ENTITY** **

Title

DATA PROTECTION SYSTEM SELECTIVELY ALTERING AN END PORTION OF PACKETS BASED ON INCOMPLETE DETERMINATION OF WHETHER A PACKET IS VALID OR INVALID

Preliminary Class

726

Statement under 37 CFR 1.55 or 1.78 for AIA (First Inventor to File) Transition Applications:

PROTECTING YOUR INVENTION OUTSIDE THE UNITED STATES

Since the rights granted by a U.S. patent extend only throughout the territory of the United States and have no effect in a foreign country, an inventor who wishes patent protection in another country must apply for a patent in a specific country or in regional patent offices. Applicants may wish to consider the filing of an international application under the Patent Cooperation Treaty (PCT). An international (PCT) application generally has the same effect as a regular national patent application in each PCT-member country. The PCT process **simplifies** the filing of patent applications on the same invention in member countries, but **does not result** in a grant of "an international patent" and does not eliminate the need of applicants to file additional documents and fees in countries where patent protection is desired.

Almost every country has its own patent law, and a person desiring a patent in a particular country must make an application for patent in that country in accordance with its particular laws. Since the laws of many countries differ in various respects from the patent law of the United States, applicants are advised to seek guidance from specific foreign countries to ensure that patent rights are not lost prematurely.

Applicants also are advised that in the case of inventions made in the United States, the Director of the USPTO must issue a license before applicants can apply for a patent in a foreign country. The filing of a U.S. patent application serves as a request for a foreign filing license. The application's filing receipt contains further information and guidance as to the status of applicant's license for foreign filing.

Applicants may wish to consult the USPTO booklet, "General Information Concerning Patents" (specifically, the section entitled "Treaties and Foreign Patents") for more information on timeframes and deadlines for filing foreign patent applications. The guide is available either by contacting the USPTO Contact Center at 800-786-9199, or it can be viewed on the USPTO website at http://www.uspto.gov/web/offices/pac/doc/general/index.html.

For information on preventing theft of your intellectual property (patents, trademarks and copyrights), you may wish to consult the U.S. Government website, http://www.stopfakes.gov. Part of a Department of Commerce initiative, this website includes self-help "toolkits" giving innovators guidance on how to protect intellectual property in specific countries such as China, Korea and Mexico. For questions regarding patent enforcement issues, applicants may call the U.S. Government hotline at 1-866-999-HALT (1-866-999-4158).

LICENSE FOR FOREIGN FILING UNDER

Title 35, United States Code, Section 184

Title 37, Code of Federal Regulations, 5.11 & 5.15

GRANTED

The applicant has been granted a license under 35 U.S.C. 184, if the phrase "IF REQUIRED, FOREIGN FILING LICENSE GRANTED" followed by a date appears on this form. Such licenses are issued in all applications where the conditions for issuance of a license have been met, regardless of whether or not a license may be required as set forth in 37 CFR 5.15. The scope and limitations of this license are set forth in 37 CFR 5.15(a) unless an earlier license has been issued under 37 CFR 5.15(b). The license is subject to revocation upon written notification. The date indicated is the effective date of the license, unless an earlier license of similar scope has been granted under 37 CFR 5.13 or 5.14.

This license is to be retained by the licensee and may be used at any time on or after the effective date thereof unless it is revoked. This license is automatically transferred to any related applications(s) filed under 37 CFR 1.53(d). This license is not retroactive.

The grant of a license does not in any way lessen the responsibility of a licensee for the security of the subject matter as imposed by any Government contract or the provisions of existing laws relating to espionage and the national security or the export of technical data. Licensees should apprise themselves of current regulations especially with respect to certain countries, of other agencies, particularly the Office of Defense Trade Controls, Department of State (with respect to Arms, Munitions and Implements of War (22 CFR 121-128)); the Bureau of Industry and Security, Department of Commerce (15 CFR parts 730-774); the Office of Foreign AssetsControl, Department of Treasury (31 CFR Parts 500+) and the Department of Energy.

NOT GRANTED

No license under 35 U.S.C. 184 has been granted at this time, if the phrase "IF REQUIRED, FOREIGN FILING LICENSE GRANTED" DOES NOT appear on this form. Applicant may still petition for a license under 37 CFR 5.12, if a license is desired before the expiration of 6 months from the filing date of the application. If 6 months has lapsed from the filing date of this application and the licensee has not received any indication of a secrecy order under 35 U.S.C. 181, the licensee may foreign file the application pursuant to 37 CFR 5.15(b).

SelectUSA

The United States represents the largest, most dynamic marketplace in the world and is an unparalleled location for business investment, innovation, and commercialization of new technologies. The U.S. offers tremendous resources and advantages for those who invest and manufacture goods here. Through SelectUSA, our nation works to promote and facilitate business investment. SelectUSA provides information assistance to the international investor community; serves as an ombudsman for existing and potential investors; advocates on behalf of U.S. cities, states, and regions competing for global investment; and counsels U.S. economic development organizations on investment attraction best practices. To learn more about why the United States is the best country in the world to develop technology, manufacture products, deliver services, and grow your business, visit http://www.SelectUSA.gov or call +1-202-482-6800.

OK TO ENTER: /MJS/

05/01/2013

Attorney Docket No.: 802-001C

IN THE UNITED STATES PATENT AND TRADEMARK OFFICE

In Re Application of: Krumel	)	
	)	
Serial No.: 12/807,641	)	
	)	
Filed: September 10, 2010	)	Examiner: Simitoski, Michael J.
	)	
For: REAL TIME FIREWALL/DATA PROTECTION SYSTEMS AND METHODS	)	Group Art Unit: 2439

Mail Stop Issue Fee
Commissioner for Patents
P.O. Box 1450
Alexandria, VA 22313-1450

AMENDMENT PURSUANT TO RULE 312

Sir:

In response to the notice of allowance mailed January 18, 2013, please re-examine the above-identified application in view of the following amendment and remarks. The issue fee transmittal accompanies this submission.

IN THE TITLE:

Please change the title to:

--DATA PROTECTION SYSTEM SELECTIVELY ALTERING AN END PORTION OF PACKETS BASED ON INCOMPLETE DETERMINATION OF WHETHER A PACKET IS VALID OR INVALID--.

UNITED STATES PATENT AND TRADEMARK OFFICE

UNITED STATES DEPARTMENT OF COMMERCE
United States Patent and Trademark Office
Address: COMMISSIONER FOR PATENTS
P.O. Box 1450
Alexandria, Virginia 22313-1450
www.uspto.gov

BIB DATA SHEET

CONFIRMATION NO. 3474

SERIAL NUMBER	FILING or 371(c) DATE	CLASS	GROUP ART UNIT	ATTORNEY DOCKET NO.
12/807,641	09/10/2010 RULE	726	2493	802-001C

APPLICANTS
Andrew K. Krumel, San Jose, CA;

**** CONTINUING DATA ***************************
This application is a CON of 11/374,465 03/13/2006 ABN
which is a CON of 09/611,775 07/07/2000 PAT 7013482

**** FOREIGN APPLICATIONS ***************************

**** IF REQUIRED, FOREIGN FILING LICENSE GRANTED **** ** SMALL ENTITY **
10/15/2010

Foreign Priority claimed	☐ Yes ☑ No	☐ Met after Allowance	STATE OR COUNTRY	SHEETS DRAWINGS	TOTAL CLAIMS	INDEPENDENT CLAIMS
35 USC 119(a-d) conditions met	☐ Yes ☑ No		CA	14	30	1
Verified and Acknowledged	/MICHAEL J SIMITOSKI/ Examiner's Signature	Initials				

ADDRESS
Alan R. Loudermilk
511 N. Washington Ave
Marshall, TX 75670
UNITED STATES

TITLE
DATA PROTECTION SYSTEM SELECTIVELY ALTERING AN END PORTION OF PACKETS BASED ON INCOMPLETE DETERMINATION OF WHETHER A PACKET IS VALID OR INVALID

FILING FEE RECEIVED		
1170	FEES: Authority has been given in Paper No._____ to charge/credit DEPOSIT ACCOUNT No._____ for following:	☐ All Fees ☐ 1.16 Fees (Filing) ☐ 1.17 Fees (Processing Ext. of time) ☐ 1.18 Fees (Issue) ☐ Other _____ ☐ Credit

UNITED STATES PATENT AND TRADEMARK OFFICE

UNITED STATES DEPARTMENT OF COMMERCE
United States Patent and Trademark Office
Address: COMMISSIONER FOR PATENTS
P.O. Box 1450
Alexandria, Virginia 22313-1450
www.uspto.gov

APPLICATION NO.	FILING DATE	FIRST NAMED INVENTOR	ATTORNEY DOCKET NO.	CONFIRMATION NO.
12/807,641	09/10/2010	Andrew K. Krumel	802-001C	3474

107299 7590 05/02/2013

Alan R. Loudermilk
511 N. Washington Ave
Marshall, TX 75670

EXAMINER	
SIMITOSKI, MICHAEL J	
ART UNIT	PAPER NUMBER
2493	
MAIL DATE	DELIVERY MODE
05/02/2013	PAPER

Please find below and/or attached an Office communication concerning this application or proceeding.

The time period for reply, if any, is set in the attached communication.

Response to Rule 312 Communication	Application No.	Applicant(s)
	12/807,641	KRUMEL, ANDREW K.
	Examiner	Art Unit
	MICHAEL SIMITOSKI	2493

-- The MAILING DATE of this communication appears on the cover sheet with the correspondence address –

1. ☒ The amendment filed on *22 April 2013* under 37 CFR 1.312 has been considered, and has been:

a) ☐ entered.

b) ☒ entered as directed to matters of form not affecting the scope of the invention.

c) ☐ disapproved because the amendment was filed after the payment of the issue fee.
Any amendment filed after the date the issue fee is paid must be accompanied by a petition under 37 CFR 1.313(c)(1) and the required fee to withdraw the application from issue.

d) ☐ disapproved. See explanation below.

e) ☐ entered in part. See explanation below.

/Michael J Simitoski/
Primary Examiner, Art Unit 2493

OPAP
APR 22 2013
PATENT AND TRADEMARK OFFICE

1 fw/$

PART B - FEE(S) TRANSMITTAL

Complete and send this form, together with applicable fee(s), to: Mail Mail Stop ISSUE FEE
Commissioner for Patents
P.O. Box 1450
Alexandria, Virginia 22313-1450
or Fax (571)-273-2885

INSTRUCTIONS: This form should be used for transmitting the ISSUE FEE and PUBLICATION FEE (if required). Blocks 1 through 5 should be completed where appropriate. All further correspondence including the Patent, advance orders and notification of maintenance fees will be mailed to the current correspondence address as indicated unless corrected below or directed otherwise in Block 1, by (a) specifying a new correspondence address; and/or (b) indicating a separate "FEE ADDRESS" for maintenance fee notifications.

CURRENT CORRESPONDENCE ADDRESS (Note: Use Block 1 for any change of address)

107299 7590 01/18/2013

Alan R. Loudermilk
511 N. Washington Ave
Marshall, TX 75670

Note: A certificate of mailing can only be used for domestic mailings of the Fee(s) Transmittal. This certificate cannot be used for any other accompanying papers. Each additional paper, such as an assignment or formal drawing, must have its own certificate of mailing or transmission.

Certificate of Mailing or Transmission
I hereby certify that this Fee(s) Transmittal is being deposited with the United States Postal Service with sufficient postage for first class mail in an envelope addressed to the Mail Stop ISSUE FEE address above, or being facsimile transmitted to the USPTO (571) 273-2885, on the date indicated below.

ALAN R. LOUDERMILK	(Depositor's name)
	(Signature)
4/18/13	(Date)

APPLICATION NO.	FILING DATE	FIRST NAMED INVENTOR	ATTORNEY DOCKET NO.	CONFIRMATION NO.
12/807,641	09/10/2010	Andrew K. Krumel	802-001C	3474

TITLE OF INVENTION: REAL TIME FIREWALL/DATA PROTECTION SYSTEMS AND METHODS

APPLN. TYPE	SMALL ENTITY	ISSUE FEE DUE	PUBLICATION FEE DUE	PREV. PAID ISSUE FEE	TOTAL FEE(S) DUE	DATE DUE
nonprovisional	YES	$885	$300	$0	$1185	04/18/2013

04/23/2013 CNGUYEN3 00000064 500251 12807641
01 FC:2501 890.00 DA
02 FC:1504 300.00 DA

EXAMINER	ART UNIT	CLASS-SUBCLASS
SIMITOSKI, MICHAEL J	2493	726-013000

1. Change of correspondence address or indication of "Fee Address" (37 CFR 1.363).
☐ Change of correspondence address (or Change of Correspondence Address form PTO/SB/122) attached.
☐ "Fee Address" indication (or "Fee Address" Indication form PTO/SB/47; Rev 03-02 or more recent) attached. **Use of a Customer Number is required.**

2. For printing on the patent front page, list
(1) the names of up to 3 registered patent attorneys or agents OR, alternatively,
(2) the name of a single firm (having as a member a registered attorney or agent) and the names of up to 2 registered patent attorneys or agents. If no name is listed, no name will be printed.

1 LOUDERMILK + ASSOCIATES
2
3

3. ASSIGNEE NAME AND RESIDENCE DATA TO BE PRINTED ON THE PATENT (print or type)

PLEASE NOTE: Unless an assignee is identified below, no assignee data will appear on the patent. If an assignee is identified below, the document has been filed for recordation as set forth in 37 CFR 3.11. Completion of this form is NOT a substitute for filing an assignment.

(A) NAME OF ASSIGNEE: 802 SYSTEMS, INC.

(B) RESIDENCE: (CITY and STATE OR COUNTRY): MARSHALL, TEXAS

Please check the appropriate assignee category or categories (will not be printed on the patent) : ☐ Individual ☒ Corporation or other private group entity ☐ Government

4a. The following fee(s) are submitted:
☒ Issue Fee
☒ Publication Fee (No small entity discount permitted)
☐ Advance Order - # of Copies _____

4b. Payment of Fee(s): **(Please first reapply any previously paid issue fee shown above)**
☐ A check is enclosed.
☐ Payment by credit card. Form PTO-2038 is attached.
☒ The Director is hereby authorized to charge the required fee(s), any deficiency, or credit any overpayment, to Deposit Account Number 50-0251 (enclose an extra copy of this form).

5. **Change in Entity Status** (from status indicated above)
☐ a. Applicant claims SMALL ENTITY status. See 37 CFR 1.27.
☐ b. Applicant is no longer claiming SMALL ENTITY status. See 37 CFR 1.27(g)(2).

NOTE: The Issue Fee and Publication Fee (if required) will not be accepted from anyone other than the applicant; a registered attorney or agent; or the assignee or other party in interest as shown by the records of the United States Patent and Trademark Office.

Authorized Signature _____ Date 4/18/13

Typed or printed name ALAN R. LOUDERMILK Registration No. 32,788

This collection of information is required by 37 CFR 1.311. The information is required to obtain or retain a benefit by the public which is to file (and by the USPTO to process) an application. Confidentiality is governed by 35 U.S.C. 122 and 37 CFR 1.14. This collection is estimated to take 12 minutes to complete, including gathering, preparing, and submitting the completed application form to the USPTO. Time will vary depending upon the individual case. Any comments on the amount of time you require to complete this form and/or suggestions for reducing this burden, should be sent to the Chief Information Officer, U.S. Patent and Trademark Office, U.S. Department of Commerce, P.O. Box 1450, Alexandria, Virginia 22313-1450. DO NOT SEND FEES OR COMPLETED FORMS TO THIS ADDRESS. SEND TO: Commissioner for Patents, P.O. Box 1450, Alexandria, Virginia 22313-1450.

Under the Paperwork Reduction Act of 1995, no persons are required to respond to a collection of information unless it displays a valid OMB control number.

OPAP
APR 22 2013
PATENT AND TRADEMARK OFFICE

PART B - FEE(S) TRANSMITTAL

Complete and send this form, together with applicable fee(s), to: Mail Mail Stop ISSUE FEE
Commissioner for Patents
P.O. Box 1450
Alexandria, Virginia 22313-1450
or Fax (571)-273-2885

INSTRUCTIONS: This form should be used for transmitting the ISSUE FEE and PUBLICATION FEE (if required). Blocks 1 through 5 should be completed where appropriate. All further correspondence including the Patent, advance orders and notification of maintenance fees will be mailed to the current correspondence address as indicated unless corrected below or directed otherwise in Block 1, by (a) specifying a new correspondence address; and/or (b) indicating a separate "FEE ADDRESS" for maintenance fee notifications.

CURRENT CORRESPONDENCE ADDRESS (Note: Use Block 1 for any change of address)

107299 7590 01/18/2013
Alan R. Loudermilk
511 N. Washington Ave
Marshall, TX 75670

Note: A certificate of mailing can only be used for domestic mailings of the Fee(s) Transmittal. This certificate cannot be used for any other accompanying papers. Each additional paper, such as an assignment or formal drawing, must have its own certificate of mailing or transmission.

Certificate of Mailing or Transmission
I hereby certify that this Fee(s) Transmittal is being deposited with the United States Postal Service with sufficient postage for first class mail in an envelope addressed to the Mail Stop ISSUE FEE address above, or being facsimile transmitted to the USPTO (571) 273-2885, on the date indicated below.

ALAN R. LOUDERMILK	(Depositor's name)
[signature]	(Signature)
4/18/13	(Date)

APPLICATION NO.	FILING DATE	FIRST NAMED INVENTOR	ATTORNEY DOCKET NO.	CONFIRMATION NO.
12/807,641	09/10/2010	Andrew K. Krumel	802-001C	3474

TITLE OF INVENTION: REAL TIME FIREWALL/DATA PROTECTION SYSTEMS AND METHODS

COPY

APPLN. TYPE	SMALL ENTITY	ISSUE FEE DUE	PUBLICATION FEE DUE	PREV. PAID ISSUE FEE	TOTAL FEE(S) DUE	DATE DUE
nonprovisional	YES	$885	$300	$0	$1185	04/18/2013

EXAMINER	ART UNIT	CLASS-SUBCLASS
SIMITOSKI, MICHAEL J	2493	726-013000

1. Change of correspondence address or indication of "Fee Address" (37 CFR 1.363).
☐ Change of correspondence address (or Change of Correspondence Address form PTO/SB/122) attached.
☐ "Fee Address" indication (or "Fee Address" Indication form PTO/SB/47; Rev 03-02 or more recent) attached. **Use of a Customer Number is required.**

2. For printing on the patent front page, list
(1) the names of up to 3 registered patent attorneys or agents OR, alternatively,
(2) the name of a single firm (having as a member a registered attorney or agent) and the names of up to 2 registered patent attorneys or agents. If no name is listed, no name will be printed.
1 LOUDERMILK + ASSOCIATES
2 _____
3 _____

3. ASSIGNEE NAME AND RESIDENCE DATA TO BE PRINTED ON THE PATENT (print or type)

PLEASE NOTE: Unless an assignee is identified below, no assignee data will appear on the patent. If an assignee is identified below, the document has been filed for recordation as set forth in 37 CFR 3.11. Completion of this form is NOT a substitute for filing an assignment.

(A) NAME OF ASSIGNEE: 802 SYSTEMS, INC.
(B) RESIDENCE: (CITY and STATE OR COUNTRY): MARSHALL, TEXAS

Please check the appropriate assignee category or categories (will not be printed on the patent): ☐ Individual ☒ Corporation or other private group entity ☐ Government

4a. The following fee(s) are submitted:
☒ Issue Fee
☒ Publication Fee (No small entity discount permitted)
☐ Advance Order - # of Copies _____

4b. Payment of Fee(s): **(Please first reapply any previously paid issue fee shown above)**
☐ A check is enclosed.
☐ Payment by credit card. Form PTO-2038 is attached.
☒ The Director is hereby authorized to charge the required fee(s), any deficiency, or credit any overpayment, to Deposit Account Number 50-0751 (enclose an extra copy of this form).

5. **Change in Entity Status** (from status indicated above)
☐ a. Applicant claims SMALL ENTITY status. See 37 CFR 1.27.
☐ b. Applicant is no longer claiming SMALL ENTITY status. See 37 CFR 1.27(g)(2).

NOTE: The Issue Fee and Publication Fee (if required) will not be accepted from anyone other than the applicant; a registered attorney or agent; or the assignee or other party in interest as shown by the records of the United States Patent and Trademark Office.

Authorized Signature [signature] Date 4/18/13
Typed or printed name ALAN R. LOUDERMILK Registration No. 32,788

This collection of information is required by 37 CFR 1.311. The information is required to obtain or retain a benefit by the public which is to file (and by the USPTO to process) an application. Confidentiality is governed by 35 U.S.C. 122 and 37 CFR 1.14. This collection is estimated to take 12 minutes to complete, including gathering, preparing, and submitting the completed application form to the USPTO. Time will vary depending upon the individual case. Any comments on the amount of time you require to complete this form and/or suggestions for reducing this burden, should be sent to the Chief Information Officer, U.S. Patent and Trademark Office, U.S. Department of Commerce, P.O. Box 1450, Alexandria, Virginia 22313-1450. DO NOT SEND FEES OR COMPLETED FORMS TO THIS ADDRESS. SEND TO: Commissioner for Patents, P.O. Box 1450, Alexandria, Virginia 22313-1450.

Under the Paperwork Reduction Act of 1995, no persons are required to respond to a collection of information unless it displays a valid OMB control number.

OPAP WP12
APR 22 2013
PATENT & TRADEMARK OFFICE

Attorney Docket No.: 802-001C

IN THE UNITED STATES PATENT AND TRADEMARK OFFICE

In Re Application of: Krumel	)	
	)	
Serial No.: 12/807,641	)	
	)	
Filed: September 10, 2010	)	Examiner: Simitoski, Michael J.
	)	
For: REAL TIME FIREWALL/DATA PROTECTION SYSTEMS AND METHODS	)	Group Art Unit: 2439

Mail Stop Issue Fee
Commissioner for Patents
P.O. Box 1450
Alexandria, VA 22313-1450

AMENDMENT PURSUANT TO RULE 312

Sir:

In response to the notice of allowance mailed January 18, 2013, please re-examine the above-identified application in view of the following amendment and remarks. The issue fee transmittal accompanies this submission.

IN THE TITLE:

Please change the title to:

--DATA PROTECTION SYSTEM SELECTIVELY ALTERING AN END PORTION OF PACKETS BASED ON INCOMPLETE DETERMINATION OF WHETHER A PACKET IS VALID OR INVALID--.

REMARKS

All claims are allowed. Herein Applicant is amending the title consistent with the allowed subject matter. Entry of this amendment is requested.

Please contact the undersigned if there are any questions.

No new matter has been added.

Please charge any additional fees due, or credit any overpayment, to Deposit Account No. 50-0251.

Respectfully submitted

Alan R. Loudermilk
Registration No. 32,788
Attorney for Applicant(s)

April 18, 2013
Loudermilk & Associates
511 N. Washington Avenue
Marshall, Texas 75670
903-407-4213

I hereby certify that the foregoing is being deposited with the US postal service, postal prepaid, or faxed, to Commissioner for Patents, P.O. Box 1450, Alexandria, VA 22313-1450, on the date indicated above.

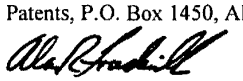

UNITED STATES PATENT AND TRADEMARK OFFICE

UNITED STATES DEPARTMENT OF COMMERCE
United States Patent and Trademark Office
Address: COMMISSIONER FOR PATENTS
P.O. Box 1450
Alexandria, Virginia 22313-1450
www.uspto.gov

NOTICE OF ALLOWANCE AND FEE(S) DUE

107299 7590 01/18/2013

Alan R. Loudermilk
511 N. Washington Ave
Marshall, TX 75670

EXAMINER
SIMITOSKI, MICHAEL J

ART UNIT	PAPER NUMBER
2493	

DATE MAILED: 01/18/2013

APPLICATION NO.	FILING DATE	FIRST NAMED INVENTOR	ATTORNEY DOCKET NO.	CONFIRMATION NO.
12/807,641	09/10/2010	Andrew K. Krumel	802-001C	3474

TITLE OF INVENTION: REAL TIME FIREWALL/DATA PROTECTION SYSTEMS AND METHODS

APPLN. TYPE	SMALL ENTITY	ISSUE FEE DUE	PUBLICATION FEE DUE	PREV. PAID ISSUE FEE	TOTAL FEE(S) DUE	DATE DUE
nonprovisional	YES	$885	$300	$0	$1185	04/18/2013

THE APPLICATION IDENTIFIED ABOVE HAS BEEN EXAMINED AND IS ALLOWED FOR ISSUANCE AS A PATENT. PROSECUTION ON THE MERITS IS CLOSED. THIS NOTICE OF ALLOWANCE IS NOT A GRANT OF PATENT RIGHTS. THIS APPLICATION IS SUBJECT TO WITHDRAWAL FROM ISSUE AT THE INITIATIVE OF THE OFFICE OR UPON PETITION BY THE APPLICANT. SEE 37 CFR 1.313 AND MPEP 1308.

THE ISSUE FEE AND PUBLICATION FEE (IF REQUIRED) MUST BE PAID WITHIN THREE MONTHS FROM THE MAILING DATE OF THIS NOTICE OR THIS APPLICATION SHALL BE REGARDED AS ABANDONED. THIS STATUTORY PERIOD CANNOT BE EXTENDED. SEE 35 U.S.C. 151. THE ISSUE FEE DUE INDICATED ABOVE DOES NOT REFLECT A CREDIT FOR ANY PREVIOUSLY PAID ISSUE FEE IN THIS APPLICATION. IF AN ISSUE FEE HAS PREVIOUSLY BEEN PAID IN THIS APPLICATION (AS SHOWN ABOVE), THE RETURN OF PART B OF THIS FORM WILL BE CONSIDERED A REQUEST TO REAPPLY THE PREVIOUSLY PAID ISSUE FEE TOWARD THE ISSUE FEE NOW DUE.

HOW TO REPLY TO THIS NOTICE:

I. Review the SMALL ENTITY status shown above.

If the SMALL ENTITY is shown as YES, verify your current SMALL ENTITY status:

A. If the status is the same, pay the TOTAL FEE(S) DUE shown above.

B. If the status above is to be removed, check box 5b on Part B - Fee(s) Transmittal and pay the PUBLICATION FEE (if required) and twice the amount of the ISSUE FEE shown above, or

If the SMALL ENTITY is shown as NO:

A. Pay TOTAL FEE(S) DUE shown above, or

B. If applicant claimed SMALL ENTITY status before, or is now claiming SMALL ENTITY status, check box 5a on Part B - Fee(s) Transmittal and pay the PUBLICATION FEE (if required) and 1/2 the ISSUE FEE shown above.

II. PART B - FEE(S) TRANSMITTAL, or its equivalent, must be completed and returned to the United States Patent and Trademark Office (USPTO) with your ISSUE FEE and PUBLICATION FEE (if required). If you are charging the fee(s) to your deposit account, section "4b" of Part B - Fee(s) Transmittal should be completed and an extra copy of the form should be submitted. If an equivalent of Part B is filed, a request to reapply a previously paid issue fee must be clearly made, and delays in processing may occur due to the difficulty in recognizing the paper as an equivalent of Part B.

III. All communications regarding this application must give the application number. Please direct all communications prior to issuance to Mail Stop ISSUE FEE unless advised to the contrary.

IMPORTANT REMINDER: Utility patents issuing on applications filed on or after Dec. 12, 1980 may require payment of maintenance fees. It is patentee's responsibility to ensure timely payment of maintenance fees when due.

PTOL-85 (Rev. 02/11)

PART B - FEE(S) TRANSMITTAL

Complete and send this form, together with applicable fee(s), to: Mail **Mail Stop ISSUE FEE**
Commissioner for Patents
P.O. Box 1450
Alexandria, Virginia 22313-1450
or Fax (571)-273-2885

INSTRUCTIONS: This form should be used for transmitting the ISSUE FEE and PUBLICATION FEE (if required). Blocks 1 through 5 should be completed where appropriate. All further correspondence including the Patent, advance orders and notification of maintenance fees will be mailed to the current correspondence address as indicated unless corrected below or directed otherwise in Block 1, by (a) specifying a new correspondence address; and/or (b) indicating a separate "FEE ADDRESS" for maintenance fee notifications.

CURRENT CORRESPONDENCE ADDRESS (Note: Use Block 1 for any change of address)

107299 7590 01/18/2013
Alan R. Loudermilk
511 N. Washington Ave
Marshall, TX 75670

Note: A certificate of mailing can only be used for domestic mailings of the Fee(s) Transmittal. This certificate cannot be used for any other accompanying papers. Each additional paper, such as an assignment or formal drawing, must have its own certificate of mailing or transmission.

Certificate of Mailing or Transmission
I hereby certify that this Fee(s) Transmittal is being deposited with the United States Postal Service with sufficient postage for first class mail in an envelope addressed to the Mail Stop ISSUE FEE address above, or being facsimile transmitted to the USPTO (571) 273-2885, on the date indicated below.

(Depositor's name)
(Signature)
(Date)

APPLICATION NO.	FILING DATE	FIRST NAMED INVENTOR	ATTORNEY DOCKET NO.	CONFIRMATION NO.
12/807,641	09/10/2010	Andrew K. Krumel	802-001C	3474

TITLE OF INVENTION: REAL TIME FIREWALL/DATA PROTECTION SYSTEMS AND METHODS

APPLN. TYPE	SMALL ENTITY	ISSUE FEE DUE	PUBLICATION FEE DUE	PREV. PAID ISSUE FEE	TOTAL FEE(S) DUE	DATE DUE
nonprovisional	YES	$885	$300	$0	$1185	04/18/2013

EXAMINER	ART UNIT	CLASS-SUBCLASS
SIMITOSKI, MICHAEL J	2493	726-013000

1. Change of correspondence address or indication of "Fee Address" (37 CFR 1.363).
- ❑ Change of correspondence address (or Change of Correspondence Address form PTO/SB/122) attached.
- ❑ "Fee Address" indication (or "Fee Address" Indication form PTO/SB/47; Rev 03-02 or more recent) attached. **Use of a Customer Number is required.**

2. For printing on the patent front page, list
(1) the names of up to 3 registered patent attorneys or agents OR, alternatively,
(2) the name of a single firm (having as a member a registered attorney or agent) and the names of up to 2 registered patent attorneys or agents. If no name is listed, no name will be printed.
1 _____
2 _____
3 _____

3. ASSIGNEE NAME AND RESIDENCE DATA TO BE PRINTED ON THE PATENT (print or type)

PLEASE NOTE: Unless an assignee is identified below, no assignee data will appear on the patent. If an assignee is identified below, the document has been filed for recordation as set forth in 37 CFR 3.11. Completion of this form is NOT a substitute for filing an assignment.

(A) NAME OF ASSIGNEE (B) RESIDENCE: (CITY and STATE OR COUNTRY)

Please check the appropriate assignee category or categories (will not be printed on the patent) : ❑ Individual ❑ Corporation or other private group entity ❑ Government

4a. The following fee(s) are submitted:
- ❑ Issue Fee
- ❑ Publication Fee (No small entity discount permitted)
- ❑ Advance Order - # of Copies _____

4b. Payment of Fee(s): (**Please first reapply any previously paid issue fee shown above**)
- ❑ A check is enclosed.
- ❑ Payment by credit card. Form PTO-2038 is attached.
- ❑ The Director is hereby authorized to charge the required fee(s), any deficiency, or credit any overpayment, to Deposit Account Number _____ (enclose an extra copy of this form).

5. **Change in Entity Status** (from status indicated above)
- ❑ a. Applicant claims SMALL ENTITY status. See 37 CFR 1.27.
- ❑ b. Applicant is no longer claiming SMALL ENTITY status. See 37 CFR 1.27(g)(2).

NOTE: The Issue Fee and Publication Fee (if required) will not be accepted from anyone other than the applicant; a registered attorney or agent; or the assignee or other party in interest as shown by the records of the United States Patent and Trademark Office.

Authorized Signature _____ Date _____

Typed or printed name _____ Registration No. _____

This collection of information is required by 37 CFR 1.311. The information is required to obtain or retain a benefit by the public which is to file (and by the USPTO to process) an application. Confidentiality is governed by 35 U.S.C. 122 and 37 CFR 1.14. This collection is estimated to take 12 minutes to complete, including gathering, preparing, and submitting the completed application form to the USPTO. Time will vary depending upon the individual case. Any comments on the amount of time you require to complete this form and/or suggestions for reducing this burden, should be sent to the Chief Information Officer, U.S. Patent and Trademark Office, U.S. Department of Commerce, P.O. Box 1450, Alexandria, Virginia 22313-1450. DO NOT SEND FEES OR COMPLETED FORMS TO THIS ADDRESS. SEND TO: Commissioner for Patents, P.O. Box 1450, Alexandria, Virginia 22313-1450.

Under the Paperwork Reduction Act of 1995, no persons are required to respond to a collection of information unless it displays a valid OMB control number.

UNITED STATES PATENT AND TRADEMARK OFFICE

UNITED STATES DEPARTMENT OF COMMERCE
United States Patent and Trademark Office
Address: COMMISSIONER FOR PATENTS
P.O. Box 1450
Alexandria, Virginia 22313-1450
www.uspto.gov

APPLICATION NO.	FILING DATE	FIRST NAMED INVENTOR	ATTORNEY DOCKET NO.	CONFIRMATION NO.
12/807,641	09/10/2010	Andrew K. Krumel	802-001C	3474

107299 7590 01/18/2013

Alan R. Loudermilk
511 N. Washington Ave
Marshall, TX 75670

EXAMINER	
SIMITOSKI, MICHAEL J	
ART UNIT	PAPER NUMBER
2493	

DATE MAILED: 01/18/2013

Determination of Patent Term Adjustment under 35 U.S.C. 154 (b)
(application filed on or after May 29, 2000)

The Patent Term Adjustment to date is 0 day(s). If the issue fee is paid on the date that is three months after the mailing date of this notice and the patent issues on the Tuesday before the date that is 28 weeks (six and a half months) after the mailing date of this notice, the Patent Term Adjustment will be 0 day(s).

If a Continued Prosecution Application (CPA) was filed in the above-identified application, the filing date that determines Patent Term Adjustment is the filing date of the most recent CPA.

Applicant will be able to obtain more detailed information by accessing the Patent Application Information Retrieval (PAIR) WEB site (http://pair.uspto.gov).

Any questions regarding the Patent Term Extension or Adjustment determination should be directed to the Office of Patent Legal Administration at (571)-272-7702. Questions relating to issue and publication fee payments should be directed to the Customer Service Center of the Office of Patent Publication at 1-(888)-786-0101 or (571)-272-4200.

PTOL-85 (Rev. 02/11)

Privacy Act Statement

The Privacy Act of 1974 (P.L. 93-579) requires that you be given certain information in connection with your submission of the attached form related to a patent application or patent. Accordingly, pursuant to the requirements of the Act, please be advised that: (1) the general authority for the collection of this information is 35 U.S.C. 2(b)(2); (2) furnishing of the information solicited is voluntary; and (3) the principal purpose for which the information is used by the U.S. Patent and Trademark Office is to process and/or examine your submission related to a patent application or patent. If you do not furnish the requested information, the U.S. Patent and Trademark Office may not be able to process and/or examine your submission, which may result in termination of proceedings or abandonment of the application or expiration of the patent.

The information provided by you in this form will be subject to the following routine uses:

1. The information on this form will be treated confidentially to the extent allowed under the Freedom of Information Act (5 U.S.C. 552) and the Privacy Act (5 U.S.C 552a). Records from this system of records may be disclosed to the Department of Justice to determine whether disclosure of these records is required by the Freedom of Information Act.
2. A record from this system of records may be disclosed, as a routine use, in the course of presenting evidence to a court, magistrate, or administrative tribunal, including disclosures to opposing counsel in the course of settlement negotiations.
3. A record in this system of records may be disclosed, as a routine use, to a Member of Congress submitting a request involving an individual, to whom the record pertains, when the individual has requested assistance from the Member with respect to the subject matter of the record.
4. A record in this system of records may be disclosed, as a routine use, to a contractor of the Agency having need for the information in order to perform a contract. Recipients of information shall be required to comply with the requirements of the Privacy Act of 1974, as amended, pursuant to 5 U.S.C. 552a(m).
5. A record related to an International Application filed under the Patent Cooperation Treaty in this system of records may be disclosed, as a routine use, to the International Bureau of the World Intellectual Property Organization, pursuant to the Patent Cooperation Treaty.
6. A record in this system of records may be disclosed, as a routine use, to another federal agency for purposes of National Security review (35 U.S.C. 181) and for review pursuant to the Atomic Energy Act (42 U.S.C. 218(c)).
7. A record from this system of records may be disclosed, as a routine use, to the Administrator, General Services, or his/her designee, during an inspection of records conducted by GSA as part of that agency's responsibility to recommend improvements in records management practices and programs, under authority of 44 U.S.C. 2904 and 2906. Such disclosure shall be made in accordance with the GSA regulations governing inspection of records for this purpose, and any other relevant (i.e., GSA or Commerce) directive. Such disclosure shall not be used to make determinations about individuals.
8. A record from this system of records may be disclosed, as a routine use, to the public after either publication of the application pursuant to 35 U.S.C. 122(b) or issuance of a patent pursuant to 35 U.S.C. 151. Further, a record may be disclosed, subject to the limitations of 37 CFR 1.14, as a routine use, to the public if the record was filed in an application which became abandoned or in which the proceedings were terminated and which application is referenced by either a published application, an application open to public inspection or an issued patent.
9. A record from this system of records may be disclosed, as a routine use, to a Federal, State, or local law enforcement agency, if the USPTO becomes aware of a violation or potential violation of law or regulation.

Notice of Allowability	Application No.	Applicant(s)	
	12/807,641	KRUMEL, ANDREW K.	
	Examiner	Art Unit	
	MICHAEL SIMITOSKI	2493	

-- The MAILING DATE of this communication appears on the cover sheet with the correspondence address--

All claims being allowable, PROSECUTION ON THE MERITS IS (OR REMAINS) CLOSED in this application. If not included herewith (or previously mailed), a Notice of Allowance (PTOL-85) or other appropriate communication will be mailed in due course. **THIS NOTICE OF ALLOWABILITY IS NOT A GRANT OF PATENT RIGHTS.** This application is subject to withdrawal from issue at the initiative of the Office or upon petition by the applicant. See 37 CFR 1.313 and MPEP 1308.

1. ☒ This communication is responsive to *Applicant's response of 12/27/2012*.

2. ☐ An election was made by the applicant in response to a restriction requirement set forth during the interview on _____; the restriction requirement and election have been incorporated into this action.

3. ☒ The allowed claim(s) is/are *97-132*. As a result of the allowed claim(s), you may be eligible to benefit from the **Patent Prosecution Highway** program at a participating intellectual property office for the corresponding application. For more information, please see http://www.uspto.gov/patents/init_events/pph/index.jsp or send an inquiry to PPHfeedback@uspto.gov .

4. ☐ Acknowledgment is made of a claim for foreign priority under 35 U.S.C. § 119(a)-(d) or (f).
   a) ☐ All b) ☐ Some* c) ☐ None of the:
      1. ☐ Certified copies of the priority documents have been received.
      2. ☐ Certified copies of the priority documents have been received in Application No. _____ .
      3. ☐ Copies of the certified copies of the priority documents have been received in this national stage application from the International Bureau (PCT Rule 17.2(a)).

   * Certified copies not received: _____.

Applicant has THREE MONTHS FROM THE "MAILING DATE" of this communication to file a reply complying with the requirements noted below. Failure to timely comply will result in ABANDONMENT of this application.
THIS THREE-MONTH PERIOD IS NOT EXTENDABLE.

5. ☐ CORRECTED DRAWINGS (as "replacement sheets") must be submitted.
   ☐ including changes required by the attached Examiner's Amendment / Comment or in the Office action of Paper No./Mail Date _____.

   Identifying indicia such as the application number (see 37 CFR 1.84(c)) should be written on the drawings in the front (not the back) of each sheet. Replacement sheet(s) should be labeled as such in the header according to 37 CFR 1.121(d).

6. ☐ DEPOSIT OF and/or INFORMATION about the deposit of BIOLOGICAL MATERIAL must be submitted. Note the attached Examiner's comment regarding REQUIREMENT FOR THE DEPOSIT OF BIOLOGICAL MATERIAL.

Attachment(s)

1. ☐ Notice of References Cited (PTO-892)
2. ☐ Information Disclosure Statements (PTO/SB/08), Paper No./Mail Date _____
3. ☐ Examiner's Comment Regarding Requirement for Deposit of Biological Material
4. ☐ Interview Summary (PTO-413), Paper No./Mail Date _____ .
5. ☐ Examiner's Amendment/Comment
6. ☐ Examiner's Statement of Reasons for Allowance
7. ☐ Other _____.

/Michael J Simitoski/
Primary Examiner, Art Unit 2493

Ex.1002
CISCO SYSTEMS, INC. / Page 26 of 256

EAST Search History

EAST Search History (Prior Art)

Ref #	Hits	Search Query	DBs	Default Operator	Plurals	Time Stamp
S274	15	(KRUMEL near2 ANDREW).in.	US-PGPUB; USPAT; EPO; JPO; IBM_TDB	OR	ON	2013/01/08 09:22
S275	10945	726/11,12,13.ccls. 709/229.ccls. 713/154.ccls.	US-PGPUB; USPAT; EPO; JPO; IBM_TDB	OR	ON	2013/01/08 09:23

EAST Search History (Interference)

Ref #	Hits	Search Query	DBs	Default Operator	Plurals	Time Stamp
S276	10993	726/11,12,13.ccls. 709/229.ccls. 713/154.ccls.	US-PGPUB; USPAT; UPAD	OR	ON	2013/01/08 09:23
S277	3	S276 and (packet).clm. and (end adj portion).clm. and (invalid).clm.	US-PGPUB; USPAT; UPAD	OR	ON	2013/01/08 09:23

1/ 8/ 2013 9:24:40 AM
C:\ Users\ msimitoski\ Documents\ EAST\ Workspaces\ 12\ 12_807641_real_time_firewall_data_protection_system_methods.wsp

OK TO ENTER: /MJS/

01/08/2013

RECEIVED
CENTRAL FAX CENTER
DEC 2 7 2012

Attorney Docket No.: 802-001C

IN THE UNITED STATES PATENT AND TRADEMARK OFFICE

In Re Application of: Krumel	)	
Serial No.: 12/807,641	)	
Filed: September 10, 2010	)	Examiner: Simitoski, Michael J.
For: REAL TIME FIREWALL/DATA PROTECTION SYSTEMS AND METHODS	)	Group Art Unit: 2439

Mail Stop After Final
Commissioner for Patents
P.O. Box 1450
Alexandria, VA 22313-1450

AMENDMENT AFTER FINAL REJECTION

Sir:

In response to the final office action mailed July 27, 2012, please re-examine the above-identified application in view of the following amendment and remarks. A petition for extension of time accompanies this submission and is hereby requested.

Search Notes	Application/Control No.	Applicant(s)/Patent Under Reexamination
	12807641	KRUMEL, ANDREW K.
	Examiner	Art Unit
	MICHAEL SIMITOSKI	2493

SEARCHED			
Class	Subclass	Date	Examiner
713	154	1/8/2013	MJS
709	229	1/8/2013	MJS
726	11,12,13	1/8/2013	MJS

SEARCH NOTES		
Search Notes	Date	Examiner
Updated EAST search	1/8/2013	MJS
NPL search (updated)	1/8/2013	MJS
Inventor search performed	1/8/2013	MJS

INTERFERENCE SEARCH			
Class	Subclass	Date	Examiner
713	154	1/8/2013	MJS
709	229	1/8/2013	MJS
726	11,12,13	1/8/2013	MJS

	/MICHAEL SIMITOSKI/ Primary Examiner.Art Unit 2493

Web Images More... Sign in

simultaneous packet filter

Scholar About 8,700 results (0.09 sec) My Citations

Articles
Legal documents

Any time
Since 2013
Since 2012
Since 2009
Custom range...
— 2000
Search

Sort by relevance
Sort by date

include patents
include citations

Create alert

Packet filtering for data networks
RJ Hausman, L Birenbaum - US Patent 5,473,607, 1995 - Google Patents
... 7. Primary Examiner---Douglas W. Olms Assistant Examiner---Chau T. Nguyen Attorney, Agent, or Firm---Michael J. Hughes [57] ABSTRACT An improved partial **packet filter** (10) for **filtering** data packets (210) in a computer network (12) wherein a candi- date field (413) of the ...
Cited by 299 Related articles All 2 versions Cite

Fast network layer **packet filter**
IMC Shand, JA Harper, SR Welch - US Patent 6,147,976, 2000 - Google Patents
... [54] FAST NETWORK LAYER **PACKET FILTER** [75] Inventors: Ian Michael Charles Shand, Cobham, United Kingdom; John Anthony Harper, Valbonne, France; Steven Richard Welch, Camberley, United Kingdom [73] Assignee: Cabletron Systems, Inc., Rochester, NH [21] Appl. ...
Cited by 143 Related articles All 2 versions Cite

BPF+: Exploiting global data-flow optimization in a generalized **packet filter** architecture [PS] from microsoft.com
A Begel, S McCanne, SL Graham - ACM SIGCOMM Computer ..., 1999 - dl.acm.org
... user-level protocols, for instance, the demultiplexing overhead would scale linearly with the number of filters, eg, a busy server with many **simultaneous** network connections would suffer linear slowdown as each connection would independently run the **packet filter** on its own ...
Cited by 128 Related articles BL Direct All 157 versions Cite

Ethernet: distributed **packet** switching for local computer networks [PDF] from ic.ac.uk
RM Metcalfe, DR Boggs - Communications of the ACM, 1976 - dl.acm.org
... proper termination of the Ether, and **simultaneous** drive by all 256 stations: they can tolerate (ie work during) ground differentials and ... The traffic cover can be extended with an unbuffered traffic-**filtering** repeater or **packet filter**, which passes packets from one Ether segment to ...
Cited by 1856 Related articles All 118 versions Cite More

Multicast and broadcast services in a knockout **packet** switch
KY Eng, MG Hluchyj, YS Yeh - INFOCOM'88. Networks: ..., 1988 - ieeexplore.ieee.org
... we have < pmax for the **Packet** Duplicator Approach, m and reason, the Fast **Packet Filter** is definitely preferred in applications where the multicast traffic is heavy and involves a large number of **simultaneous** destinations for each **packet**. ...
Cited by 89 Related articles Cite

All-optical updating of subcarrier encoded **packet** headers with **simultaneous** wavelength conversion of baseband payload in semiconductor optical amplifiers
MD Vaughn, DJ Blumenthal - Photonics Technology Letters, ..., 1997 - ieeexplore.ieee.org
... to optoelectronic conversion of the entire **packet** followed by electronic **filtering**, remodulation, and ... to the subcarrier frequency and provides for wavelength conver- sion of the **packet**. Our technique involves a two-stage process: First, **simultaneous** SCM header suppression and ...
Cited by 23 Related articles BL Direct All 6 versions Cite

RSVP: A new resource reservation protocol [PDF] from sjtu.edu.cn
L Zhang, S Deering, D Estrin, S Shenker, ... - Network, ..., 1993 - ieeexplore.ieee.org
... A separate function, called a **packet filter**, selects those packets that can use the resources; it is set ... This distinction between the reservation and the **filter** enables us to offer several different ... where these resources were sufficient for a small number of **simultaneous** audio streams. ...
Cited by 2091 Related articles BL Direct All 64 versions Cite

Computer network switching system
VK Bhardwaj - US Patent 5,274,631, 1993 - Google Patents
... OUTPUT **PACKET** PROCESSOR c END 98 -y UPDATE **FILTER** TABLE OF INPUT **PACKET** PROCESSOR BROADCAST THE **PACKET** TO ALL **PACKET** PROCESSORS 94 DESTINATION SIGNALS BACK VIA OUTPUT **PACKET** PROCESSOR 95 UPDATE **FILTER** TABLE OF ...
Cited by 346 Related articles All 2 versions Cite

ACC: using active networking to enhance feedback congestion control mechanisms [HTML] from isi.edu
T Faber - Network, IEEE, 1998 - ieeexplore.ieee.org
... The reaction to congestion begins at the router with the **packet filter** installation. This is in contrast to TCP with ExDlicit Congestion Notification ... Endpoints become synchronized by **simultaneous packet** loss, which results in **simultaneous** retransmission. ...
Cited by 80 Related articles BL Direct All 19 versions Cite

End-to-end internet **packet** dynamics [PDF] from tamu.edu
V Paxson - IEEE/ACM Transactions on Networking (TON), 1999 - dl.acm.org
... We instead must record the traffic with a **packet filter**. ... To address this problem, we developed tcpanaly, a program that understands the specifics of the different TCP implementations in our study, and thus can infer when the **packet filter** has made an error [21]. ...
Cited by 831 Related articles BL Direct All 31 versions Cite

Perceptual speech coding and enhancement using frame-synchronized fast wavelet **packet** transform algorithms
S Carmeni, A Drygajlo - Signal Processing, IEEE Transactions ..., 1999 - ieeexplore.ieee.org

Ex.1002
CISCO SYSTEMS, INC. / Page 30 of 256

... approach, making use of the convolution, is based on the hypothesis that **simultaneous** masking can ... Such constraints have led us to choose a Daubechies prototype **filter** of length . The time–frequency grid, or tiling, resulting from the chosen wavelet **packet** analysis transform ...
Cited by 91 Related articles All 11 versions Cite

Advances in photonic **packet** switching: An overview [PDF] from concordia.ca
S Yao, B Mukherjee, S Dixit - Communications Magazine, IEEE, 2000 - ieeexplore.ieee.org
... replacement schemes were limited to full optoelectronic conversion of the entire **packet** followed by electronic **filtering**, remodula- tion, and retransmission on a new laser. Refer- ence [12] proposed a technique to update the SCM header with **simultaneous** wavelength con ...
Cited by 636 Related articles BL Direct All 19 versions Cite

Wave-**packet** dynamics in the Li E (Σ) shelf state: **Simultaneous** observation of vibrational and rotational recurrences with single rovibronic control of an intermediate ...
JM Papanikolas, RM Williams, PG Kleiber... - The Journal of chemical ..., 1995 - link.aip.org
Page 1. Wave-**packet** dynamics in the Li2 E(1 g) shelf state: **Simultaneous** ... 7270 Papanikolas et al.: Wave-**packet** dynamics in Li2 J. Chem. Phys., Vol. 103, No. ... For these measure- ments, a long-pass **filter** 650 nm cutoff is placed in front of the PMT to reject scattered laser light. ...
Cited by 49 Related articles All 7 versions Cite

Filter bank tree and M-band wavelet **packet** algorithms in audio signal processing [PDF] from psu.edu
P Kurth, M Clausen - Signal Processing, IEEE Transactions on, 1999 - ieeexplore.ieee.org
... If we have to perform **simultaneous** spectral and subband analysis, as, for example, in MPEG audio coders, the ... It arises naturally from the analysis of the decimated **filter** banks ... The proposed methods of M-band wavelet-**packet** and FBT trans- forms were tested with several audio ...
Cited by 21 Related articles BL Direct All 12 versions Cite

High-quality audio compression using an adaptive wavelet **packet** decomposition and psychoacoustic modeling
P Srinivasan, LH Jamieson - Signal Processing, IEEE ..., 1998 - ieeexplore.ieee.org
... Page 9. SRINIVASAN AND JAMIESON: HIGH-QUALITY AUDIO COMPRESSION USING AN ADAPTIVE WAVELET **PACKET** DECOMPOSITION 1093 ... [4] PP Vaidyanathan, Multirate Systems and **Filter** Banks. ... [8] PL Ainsleigh and CK Chui, "**Simultaneous** wavelet and spline ...
Cited by 90 Related articles BL Direct All 6 versions Cite

A parallel **packet** screen for high speed networks [PDF] from 69.6.23.201
C Benecke - ... Conference, 1999.(ACSAC'99) Proceedings. 15th ..., 1999 - ieeexplore.ieee.org
... The increase in **packet** through- put gained by parallel processing for small message sizes is listed in table 1. The value of 2.95 for a 4WS is calculated from figure 6 since at least two **simultaneous** senders were ... Even though the **packet** screen is able to **filter** about 37500 pack ...
Cited by 34 Related articles All 16 versions Cite

Practical network support for IP traceback [PDF] from icir.org
S Savage, D Wetherall, A Karlin ... - ACM SIGCOMM Computer ..., 2000 - dl.acm.org
... network load, overhead on the router, the ability to trace multi- ple **simultaneous** attacks, the ... quires a router with sufficient power to examine the source address of every **packet** and sufficient ... Consequently, ingress **filtering** is most feasible in customer networks or at the border of ...
Cited by 1267 Related articles BL Direct All 174 versions Cite

N-by-N" knockout" switch for a high-performance **packet** switching system
A Acampora, MG Hluchyj, YS Yeh - US Patent 4,760,570, 1988 - Google Patents
... the switch must now recognize conflict among its inputs and internally store, or buffer, all but at most one 55 of several **simultaneous** arriving packets ... First there is a row of N **packet** filters 20i to 20/v, with each **packet filter** receiv- ing the packets propagating on a separate one of ...
Cited by 51 Related articles All 2 versions Cite

[CITATION] **Simultaneous** buffering of ATM packets in a multiwavelength optical-fiber-loop memory
M Calzavara, P Gambini, M Puleo ... - Optical Fiber ..., 1994 - opticsinfobase.org
... Figure 2 shows the packets exiting the loop when the output **filter** is tuned at either ... 3 shows the last bits of the **packet** at wavelengths A, and A, (upper traces) together ... in conclusion, the **simultaneous** and independent storage of 622-Mbitis ATM packets has been demonstrated in ...
Cited by 13 Related articles Cite

Simultaneous fast wavelength switching and intensity modulation using a tunable DBR laser
H Kobrinski, MP Vecchi, TE Chapuran... - Photonics ..., 1990 - ieeexplore.ieee.org
... device under **packet**- switching conditions, with **simultaneous** fast wavelength switching and 200 Mb/s data modulation. Wavelength switch- ing between two channels separated by AA = 2.1 1 nm is shown on the left. The two channels are resolved using a Fabry-Perot **filter** with ...
Cited by 11 Related articles All 4 versions Cite

Simultaneous noise suppression and signal compression using a library of orthonormal bases and the minimum-description-length criterion [PDF] from kfupm.edu.sa
N Saito - ... on Optical Engineering and Photonics in ..., 1994 - proceedings.spiedigitallibrary.org
... where c' is a constant independent of (k, m). Using (23) and (24), now we can state our **simultaneous** noise suppression and signal compression algorithm ... (D02 is the wavelet **packet** best-basis generated by the Haar-Walsh **filter**. Cm means the wavelet **packet** best-basis ...
Cited by 190 Related articles BL Direct All 27 versions Cite

Computer system and computer-implemented process for **simultaneous** configuration and monitoring of a computer network
B Hansham, L Jain - US Patent 6,041,347, 2000 - Google Patents
... 21,2000 [54] COMPUTER SYSTEM AND COMPUTER- IMPLEMENTED PROCESS FOR **SIMULTANEOUS** CONFIGURATION AND MONITORING OF A COMPUTER NETWORK [75] Inventors ... 8C struct **Filter** { /-310 int pass; // allow or block-7 ^312 int log; // log this **packet**? ...
Cited by 130 Related articles All 2 versions Cite

Ex.1002
CISCO SYSTEMS, INC. / Page 31 of 256

WDM optical IP tag switching with **packet**-rate wavelength conversion and subcarrier multiplexed addressing
DJ Blumenthal, A Carena, L Rau... - ..., 1999. and the ..., 1999 - ieeexplore.ieee.org
... The packets are cycled among four wavelengths and individually detected using a tunable optical **filter**. **...** 60-62, Jan., 1998. [5] MD Vaughn, and D. J. Blumenthal, "All-Optical Updating of Subcarrier Encoded **Packet** Headers with **Simultaneous** Wavelength Conversion of **...**
Cited by 43 Related articles BL Direct All 3 versions Cite

N-by-N" knockout" switch for a high-performance **packet** switching system with variable length packets
KY Eng, MG Hluchyj, YS Yeh - US Patent 4,754,451, 1988 - Google Patents
... US. Patent Jun.28,1988 Sheet 5 of 8 4,754,451 FIG .6 FROM **PACKET FILTER** 20/ 30 i **...** port of the switch for that **packet**, where the header is used in routing the **packet** through the **...** its inputs and internally store, or buffer, all but at most one of several **simultaneous** arriving packets **...**
Cited by 86 Related articles All 2 versions Cite

Mixing and playback of JPEG compressed **packet** videos
ZY Shae, MS Chen - Global Telecommunications Conference, ..., 1992 - ieeexplore.ieee.org
... With appropriate **packet filtering**, the buffer re- quirement is reduced to the amount for holding a screenful of pixels, regardless of the number of video windows and their dimensions. Figure 5 depicts the structure with **packet filtering**. **...**
Cited by 12 Related articles BL Direct All 2 versions Cite

Packet concentrator and switch including a controller for assigning priorities to space switch input terminals for control of buffers
H Suzuki - US Patent 4,888,812, 1989 - Google Patents
... a time cyclically from the buffers, a controller (35) is connected to the input device to assign priorities to the input terminals supplied with the up to N **simultaneous** packets and **...** 25(2) ADDRESS **FILTER** 26(2) "24 23(N) 25(N) .ADDRESS **FILTER PACKET** CONCENTRATING ARR. **...**
Cited by 18 Related articles All 2 versions Cite

An N-by-N" knockout" switch for a high-performance **packet** switching system
A Acampora, MG Hluchyj, YS Yeh - EP Patent 0,256,702, 1988 - freepatentsonline.com
... packet filters 20 will provide **simultaneous** transmission of those packets through to the associated concentrator 21 in the bus interface unit 15 i . It should be noted that even though a portion of the output address bits 26 of a blocked **packet** may pass through the **filter** 20 and into **...**
Cited by 16 Related articles Cite More

[HTML] Sun's SKIP firewall traversal for Mobile IP [HTML] from hjp.at
G Montenegro, V Gupta - 1998 - hjp.at
... In order to support **simultaneous** bindings the firewall must be able to interpret Mobile IP registration messages. **...** This first step of the protocol is very convenient, because the SKIP firewall can use it to dynamically configure its **packet filter**. **...**
Cited by 61 Related articles All 2 versions Cite More

An architectural comparison of ST-II and RSVP [PDF] from gdt.id.au
DJ Mitzel, D Estrin, S Shenker... - INFOCOM'94. Networking ..., 1994 - ieeexplore.ieee.org
... be shared among multiple requests for the same sour-ce.~ The Dynamic **Filter** reservation allows a receiver to modify its **packet filter** over time **...** speaker to transmit simultaneously it may be adequate to reserve only enough resources to han- dle a few **simultaneous** audio channels **...**
Cited by 86 Related articles BL Direct All 41 versions Cite

Simultaneous optical compression and decompression of 100-Gb/s OTDM packets using a single bidirectional optical delay line lattice
P Toliver, KL Deng, I Glesk ... - ... Technology Letters, IEEE, 1999 - ieeexplore.ieee.org
... amplifier (PDFFA), filtered with a 5-nm optical bandpass **filter** (BPF) to remove amplifier ASE, and propagated over 500 m of standard single-mode fiber (Fbr). The compressed **packet** is then re-injected into the Page 3. TOLIVER et al.: **SIMULTANEOUS** OPTICAL COMPRESSION **...**
Cited by 33 Related articles BL Direct All 4 versions Cite

Create alert

Ex.1002
CISCO SYSTEMS, INC. / Page 32 of 256

Web Images More... Sign in

packet filter packet alter

Scholar About 7,400 results (0.38 sec) My Citations

Articles
Legal documents

Any time
Since 2013
Since 2012
Since 2009
Custom range...
— 2000
Search

Sort by relevance
Sort by date

include patents
include citations

Create alert

The BSD **packet filter**: A new architecture for user-level **packet** capture [PDF] from uni-hamburg.de
S McCanne, V Jacobson - Proceedings of the USENIX Winter 1993 ..., 1993 - dl.acm.org
... operand. 4 Branch Instructions **alter** the flow of con- trol, based on comparison test between a con- stant or x register and the accumulator. 5. Return Instructions terminate the **filter** and indicated what portion of the **packet** to save. ...
Cited by 367 Related articles All 191 versions Cite

System for **packet filtering** of data **packet** at a computer network interface
GG Baehr, W Danielson, TL Lyon, S Mulligan... - US Patent ..., 1999 - Google Patents
... 16, 1999 [54] SYSTEM FOR **PACKET FILTERING** OF DATA **PACKET** AT A COMPUTER NETWORK INTERFACE [75] Inventors: Geoffrey G. Baehr, Palo Alto, Calif.; William Danielson, Mountain View, Calif.; Thomas L. Lyon, Palo Alto, Calif., Geoffrey Mulligan, Colorado Springs ...
Cited by 125 Related articles All 2 versions Cite

System for **packet filtering** of data packets at a computer network interface
GG Baehr, W Danielson, TL Lyon, S Mulligan... - US Patent ..., 1998 - Google Patents
... 1, 1998 [54] SYSTEM FOR **PACKET FILTERING** OF DATA PACKETS AT A COMPUTER NETWORK INTERFACE [75] Inventors: Geoffrey G. Baehr, Menlo Park; William Danielson, Mountain View; Thomas L. Lyon, Palo Alto; Geoffrey Mulligan, Fremont, all of Calif.; Martin ...
Cited by 112 Related articles All 2 versions Cite

BPF+: Exploiting global data-flow optimization in a generalized **packet filter** architecture [PS] from microsoft.com
A Begel, S McCanne, SL Graham - ACM SIGCOMM Computer ..., 1999 - dl.acm.org
... instructions **alter** the flow of control, based on a com- parison test between a register and an immediate value or another register; and, return instructions terminate the **filter** and indicate the integer- valued result of evaluation. A **filter** is evaluated by initializing the **packet** memory ...
Cited by 126 Related articles BL Direct All 157 versions Cite

End-to-end internet **packet** dynamics [PDF] from tamu.edu
V Paxson - IEEE/ACM Transactions on Networking (TON), 1999 - dl.acm.org
... Recent work by Carter and Crovella also investigates the utility of using **packet** pair in the ... Much of the effort in developing bprobe concerns how to **filter** the resulting raw measurements ... those at the sender, then "ack compression" (Section VI-A) can significantly **alter** the spacing ...
Cited by 831 Related articles BL Direct All 31 versions Cite

Automated **packet** trace analysis of TCP implementations [PDF] from kfupm.edu.sa
V Paxson - ACM SIGCOMM Computer Communication Review, 1997 - dl.acm.org
... the f&r appears as if it were located directly at one of theTCP endpoints, and only occasionally does its separate location **alter** the traffic ... endpoint then does process the second ack, and sends new, unacknowledged data The key point here is that neither the **packet filter** nor the ...
Cited by 312 Related articles BL Direct All 32 versions Cite

A modular approach to **packet** classification: Algorithms and results [PDF] from ucos.edu
TVL Woo - ..., 2000. Nineteenth Annual Joint Conference of the ..., 2000 - ieeexplore.ieee.org
... hl hk) maxEnrries = n Zhj ; T = new WterTable (mnrEnfries): foreach **Alter** F; E FT { for j ... which gives the difference between the total weights of all the rows whose j-th column is 0 and those whose j-th column is 1. Let FT = F,, . . . FN be a k-dimensional IP **packet filter** table ...
Cited by 275 Related articles BL Direct All 38 versions Cite

System for **packet filtering** of data packets at a computer network interface
GB Baehr, W Danielson, TL Lyon, S Mulligan... - US Patent ..., 1999 - Google Patents
... 2, 1999 [54] SYSTEM FOR **PACKET FILTERING** OF DATA PACKETS AT A COMPUTER NETWORK INTERFACE Ip-masq c from Linux kernel (v 2.0.27), 1994. Ip-fw c from Linux kernel (v 2.0.27), 1994. ... "Firewall Routers and **Packet Filtering**," by Gary Kessler, Feb 1995. ...
Cited by 51 Related articles All 2 versions Cite

System for **packet filtering** of data packets at a computer network interface
GB Baehr, W Danielson, TL Lyon - EP Patent ..., 1998 - freepatentsonline.com
... The screening system includes a **packet filtering** subsystem or module, which inspects each incoming **packet** and ... 330 is shown coupled via a standard network interface 410 to the **packet** screening system (or ... The decision to **alter** addresses or not can be made on a **packet**-by ...
Cited by 67 Related articles Cite More

End-to-end Internet **packet** dynamics [PDF] from kfupm.edu.sa
V Paxson - ACM SIGCOMM Computer Communication Review, 1997 - dl.acm.org
... in question, it must be due to a mechanism that still enables the **packet filter** on the ... Recent work by Carter and Crovella also investigates the utility of using **packet** pair in the ... available are those at the sender, then "ack compression" (f 6.1) can significantly **alter** the spacing of the ...
Cited by 861 Related articles BL Direct All 170 versions Cite

Control of selectivity of chemical reaction via control of wave **packet** evolution
DJ Tannor, SA Rice - The Journal of chemical physics, 1985 - link.aip.org
... A '(f2, tl) =A ~(t2)XA ,(tl)' (10) in which case it reduces to the matched **filter** result for the single state projection. IV. ... at delay time t~300. It is expected that the quantum me- chanical effects of wave **packet** spreading and interference will **alter** the quantitative predictions for this ...
Cited by 821 Related articles All 4 versions Cite

Ex.1002
CISCO SYSTEMS, INC. / Page 33 of 256

Methods and apparatus for a computer network firewall with dynamic rule processing with the ability to dynamically alter the operations of rules
MJ Cox, DL Majette, RL Sharp - US Patent 6,154,775, 2000 - Google Patents
... FOR A COMPUTER NETWORK FIREWALL WITH DYNAMIC RULE PROCESSING WITH THE ABILITY TO DYNAMICALLY **ALTER** THE OPERATIONS ... The firewall can also be configured to utilize "stateful" **packet filtering** which involves caching rule pro- cessing results for one ...
Cited by 111 Related articles All 2 versions Cite

Method and system for monitoring fieldbus network with multiple packet filters
RE Gretta Jr - US Patent 5,850,520, 1998 - Google Patents
... Using this feature, the user can initiate capture using a first **filter** settings, **alter** the **filter** setting ... applied to the fieldbus substantially instantaneously and the packets captured under the altered **filter** settings are ... 14 Claims, 16 Drawing Sheets -100 Initialize first **packet filter** settings. ...
Cited by 36 Related articles All 2 versions Cite

Best wavelet packet bases in a rate-distortion sense [PDF] from spli.ch
K Ramchandran, M Vetterli - Image Processing, IEEE ..., 1993 - ieeexplore.ieee.org
... 1. (a) Tree notation for analysis **filter** bank: The lower branch, Ho is the low-pass **filter**, and the upper branch, Hi is the high-pass **filter**. (b) All possible binary wavelet **packet** decompositions of depth 2. Note that n; refers to the jth node at the 7th scale of the tree, as shown in the ...
Cited by 785 Related articles All 16 versions Cite

Method and system for monitoring fieldbus network with dynamically alterable packet filter
RE Gretta Jr - US Patent 5,796,721, 1998 - Google Patents
... Using this feature, the user can initiate capture using a first **filter** settings, **alter** the **filter** setting while packets are being captured, and apply the altered **filter** ... 10 Claims, 16 Drawing Sheets Start -118 "User changes"\ ^**filter** settings^ -120 Receive new **packet filter** information. ...
Cited by 16 Related articles All 2 versions Cite

Network emulation in the Vint/NS simulator [PDF] from psu.edu
K Fall - ..., 1999. Proceedings. IEEE International Symposium on, 1999 - ieeexplore.ieee.org
... Early work in network emulation included the use of "flakeways" (gateways that could **alter** or drop packets), and were used for early TCPAP tests 191. ... IEEE. [SI S. McCanne and V. Jacobson. The bsd **packet filter**: A new architecture for user-level **packet** capture. Proc. ...
Cited by 230 Related articles All 23 versions Cite

Buffering in optical packet switches [PDF] from upatras.gr
DK Hunter, MC Chia, I Andonovic - ... Technology, Journal of, 1998 - ieeexplore.ieee.org
... Fig. 11. The multiwavelength loop switch---this particular example has just two inputs and outputs with four wavelengths. FFPF = fiber Fabry–Perot **filter**. Each **packet** is assigned a wavelength and circulates in the loop until the required output is free ...
Cited by 549 Related articles BL Direct All 24 versions Cite

Advances in packet radio technology
RE Kahn, SA Gronemeyer, J Burchfiel... - Proceedings of the ..., 1978 - ieeexplore.ieee.org
... incorpo- rate computer processing at each **packet** radio network node in a form that was compatible with mobile usage and portable operation. The second was the reduction to practice of sur- face acoustic wave (SAW) technology which can perform matched **filtering** (to receive ...
Cited by 401 Related articles Cite

Filtering postures: Local enforcement for global policies [PS] from upenn.edu
JD Guttman - Security and Privacy, 1997. Proceedings., 1997 ..., 1997 - ieeexplore.ieee.org
... When **packet filtering** is used as a security mechanism, different routers may need to cooperate to ... language for expressing global network access control policies of a kind that $**filtering** routers are ... these filters may not provide optimal service, a human must sometimes **alter** them ...
Cited by 164 Related articles BL Direct All 42 versions Cite

Packet authentication and packet encryption/decryption scheme for security gateway
A Shimbo, A Inoue, M Ishiyama, T Okamoto - US Patent 6,092,191, 2000 - Google Patents
Cited by 76 Related articles All 2 versions Cite

Runt packet filter
GA Jensen, SP Reames, JD Morris, GS Neal - US Patent 4,673,192, 1987 - Google Patents
... Although the preferred embodiment of the runt **packet filter** circuit implements a 512 bit length thresh- old, other threshold values are possible. Essentially, a 5 designer need only **alter** the size of the data shift register and corresponding components in the carrier-sense signal ...
Cited by 12 Related articles All 2 versions Cite

System for securing the flow of and selectively modifying packets in a computer network
G Shwed, S Kramer, N Zuk, G Dogon - US Patent ..., 1998 - Google Patents
... Each rule in the rule base includes a source, destination, service, whether to accept or reject the **packet** and whether to log the event. The set of **filter** language instructions are installed and execute on inspection engines which are placed on computers acting as firewalls. ...
Cited by 395 Related articles All 2 versions Cite

[PDF] Implementing real time packet forwarding policies using streams [PDF] from psu.edu
I Wakeman, A Ghosh, J Crowcroft, V Jacobson ... - Proceedings of USENIX ..., 1995 - Citeseer
... table lookup as more e cient (Section 4). Another common mechanism for classifying packets is the automata used inside the Berke- ley **Packet Filter** (BPF) and ... Figure 6: Latency of Streams module against size of **packet** - - - ... **Alter**- native borrowing schemes are detailed in 1]. ...
Cited by 82 Related articles All 46 versions Cite More

A novel cache architecture to support layer-four packet classification at memory access speeds [PS] from ohio-state.edu
J Xu, M Singhal, J Degroat - INFOCOM 2000. Nineteenth ..., 2000 - ieeexplore.ieee.org
... The objective of layer-4 lookup is to find the matching **filter** with the highest priority, called best matching **filter**, for an ... of new flows divided by the **packet** volume because each new flow causes exactly one miss when its first **packet** ar- rives. ... So, we resort to the latter **alter**- native. ...
Cited by 79 Related articles BL Direct All 14 versions Cite

Ex.1002
CISCO SYSTEMS, INC. / Page 34 of 256

Method and apparatus for accelerated **packet** processing
SC Stone - US Patent 5,598,410, 1997 - Google Patents
Page 1. United States Patent [19] Stone [54] METHOD AND APPARATUS FOR ACCELERATED **PACKET** PROCESSING [75] Inventor: Geoffrey C. Stone, Minneapolis, Minn. [73] Assignee: Storage Technology Corporation, Louisville, Colo. ...
Cited by 207 Related articles All 2 versions Cite

Fast **packet** switch architectures for broadband integrated services digital networks [PDF] from ucdavis.edu
FA Tobagi - Proceedings of the IEEE, 1990 - ieeexplore.ieee.org
Page 1. Fast **Packet** Switch Architectures For Broad- band Integrated Services Digital Networks Invited Paper ... (This trans- 'Long distance switching center Fig. 3. Telephone network with a general rmesh topology. P computer **packet** switch C d \ b b Fig. ...
Cited by 449 Related articles All 10 versions Cite

Conditional access **filter** as for a **packet** video signal inverse transport system
MS Deiss - US Patent 5,602,053, 1998 - Google Patents
... 1, 1995 [54] CONDITIONAL ACCESS **FILTER** AS FOR A **PACKET** VIDEO SIGNAL INVERSE TRANSPORT SYSTEM [75] Inventor: Michael Scott Deiss, Zionsville, Ind. [73] Assignee: Thomson Consumer Electronics, Inc., Indianapolis, Ind. [21] Appl. ...
Cited by 23 Related articles All 2 versions Cite

Wavelet **packet** feature extraction for vibration monitoring
GG Yen, KC Lin - Industrial Electronics, IEEE Transactions on, 2000 - ieeexplore.ieee.org
... based analysis [10], which provides flexible time–frequency resolution, becomes an efficient **alter**- native in ... In Section IV, the feasibility of the proposed wavelet-**packet**-based feature extraction technique ... equivalent to **filtering** a signal at all times with a bandpass **filter** having as ...
Cited by 306 Related articles BL Direct All 4 versions Cite More

Network switch that includes a plurality of shared **packet** buffers
AT Schnell - US Patent 5,923,654, 1999 - Google Patents
Page 1. United States Patent [w] Schnell [54] NETWORK SWITCH THAT INCLUDES A PLURALITY OF SHARED **PACKET** BUFFERS [75] Inventor: Arnold Thomas Schnell, Austin, Tex. [73] Assignee: Compaq Computer Corp., Houston, Tex. [21] Appl. ...
Cited by 55 Related articles All 2 versions Cite

The D2-MAC-**Packet** System for All Transmission Channels
J Sabatier, D Pommier, M Mathieu - SMPTE journal, 1985 - journal.smpte.org
... In the receiver a simple low-pass **filter** is required at the input of data demodulator. ... TOM) Concept and Service Identification The basic structure of the D2- MAC-**packet** system consists of ... the relative allocations be- tween data, color, and luminance in- formation to **alter** the aspect ...
Cited by 44 Related articles All 3 versions Cite

Create alert

Ex.1002
CISCO SYSTEMS, INC. / Page 35 of 256

Web Images More... Sign in

packet filter packet "selectively alter"

Scholar 5 results (0.14 sec) My Citations

Articles
Legal documents

Any time
Since 2013
Since 2012
Since 2009
Custom range...
— 2000
Search

Sort by relevance
Sort by date

include patents
include citations

Create alert

Predictive communication system filtering arrangement
NS Jayant, V Ramamoorthy - US Patent 4,617,676, 1986 - Google Patents
... The **filter** control signals **selectively alter** the predictive parameter signals to optimize the predictively decoded signal ... to provide a set of **filter** control signals a,/J to the post **filter** responsive to ... In 30 **packet** transmission systems well known in the art, the bit rate information may be ...
Cited by 61 Related articles All 2 versions Cite

Portable ECG data-storage apparatus
GN Mills, H Homayoun, RJ Semler - US Patent 5,111,396, 1992 - Google Patents
... herein to be capable of receiving up to a full 12-lead **packet** of ECG ... generally speaking, in the input/output interface structure are an amplifier/**filter** substructure 16 ... and an associated semiconductor memory, an input/output interface structure **selectively alter**- nately coupleable ...
Cited by 86 Related articles All 2 versions Cite

Reducing the vulnerability of dynamic computer networks [PDF] from dtic.mil
GG Finn - 1988 - DTIC Document
... From the network's point of view, this looks as if a **packet** is removed from the link upon which it was originally transmitted and is suddenly inserted into another link. ... Discarding **Packets** A **filter** placed on a link can **selectively alter** or discard any **packets** that pass through it. ...
Cited by 30 Related articles All 4 versions Cite More

Virtuoso: A virtual single processor programming system for distributed real-time applications
E Verhulst - Microprocessing and Microprogramming, 1994 - Elsevier
... data. **Filtering** can be performed on the desired sending or receiving task, the type of message and the size. ... tasks. Each **packet** re- quires about 4 ms processing time. The last task also counts the number of **packets** processed. ...
Cited by 12 Related articles All 3 versions Cite

Distributrd Interactive Simulation Virtual Cassette Recorder (DIS VCR): A Datalogger with Variable Speed Replay. [PDF] from dtic.mil
JL Former - 1994 - DTIC Document
... However, they also want a single-step mode that allows detailed examination of individual DIS **packets** for form and content and a way to measure the **packet** rates. They also said it is necessary to **filter** the replay output of PDUs to 13 Page 27. ...
Cited by 2 Related articles All 3 versions Cite More

Create alert

About Google Scholar All About Google Privacy & Terms Give us feedback

Ex.1002
CISCO SYSTEMS, INC. / Page 36 of 256

Issue Classification	Application/Control No.	Applicant(s)/Patent Under Reexamination
	12807641	KRUMEL, ANDREW K.
	Examiner	**Art Unit**
	MICHAEL SIMITOSKI	2493

ORIGINAL		INTERNATIONAL CLASSIFICATION									
CLASS	SUBCLASS	CLAIMED					NON-CLAIMED				
726	13	G	0	6	F	17 / 00 (2006.01.01)	G	0	6	F	9 / 00 (2006.01.01)
CROSS REFERENCE(S)		G	0	6	F	15 / 16 (2006.01.01)					

CLASS	SUBCLASS (ONE SUBCLASS PER BLOCK)				
713	154				
726	11	12			
709	229				

☐ Claims renumbered in the same order as presented by applicant ☐ CPA ☒ T.D. ☐ R.1.47

Final	Original	Final	Original	Final	Original	Final	Original	Final	Original	Final	Original	Final	Original	Final	Original
	1		20		39		58		77		96	25	115		
	2		21		40		59		78	1	97	26	116		
	3		22		41		60		79	2	98	27	117		
	4		23		42		61		80	3	99	28	118		
	5		24		43		62		81	4	100	29	119		
	6		25		44		63		82	5	101	30	120		
	7		26		45		64		83	6	102	31	121		
	8		27		46		65		84	13	103	32	122		
	9		28		47		66		85	14	104	33	123		
	10		29		48		67		86	15	105	34	124		
	11		30		49		68		87	16	106	35	125		
	12		31		50		69		88	17	107	36	126		
	13		32		51		70		89	18	108	7	127		
	14		33		52		71		90	19	109	8	128		
	15		34		53		72		91	20	110	9	129		
	16		35		54		73		92	21	111	11	130		

NONE		**Total Claims Allowed:**	
(Assistant Examiner)	(Date)	36	
/MICHAEL SIMITOSKI/ Primary Examiner.Art Unit 2493	01/08/2013	O.G. Print Claim(s)	O.G. Print Figure
(Primary Examiner)	(Date)	1	3

Issue Classification	Application/Control No.	Applicant(s)/Patent Under Reexamination
	12807641	KRUMEL, ANDREW K.
	Examiner	**Art Unit**
	MICHAEL SIMITOSKI	2493

☐ Claims renumbered in the same order as presented by applicant	☐ CPA	☒ T.D.	☐ R.1.47

	17		36		55		74		93	22	112	12	131		
	18		37		56		75		94	23	113	10	132		
	19		38		57		76		95	24	114				

NONE		**Total Claims Allowed:**	
(Assistant Examiner)	(Date)	36	
/MICHAEL SIMITOSKI/ Primary Examiner.Art Unit 2493	01/08/2013	O.G. Print Claim(s)	O.G. Print Figure
(Primary Examiner)	(Date)	1	3

Application Number	Application/Control No.	Applicant(s)/Patent under Reexamination	
	12/807,641	KRUMEL, ANDREW K.	

Document Code - DISQ	Internal Document – DO NOT MAIL

TERMINAL DISCLAIMER	☒ APPROVED	☐ DISAPPROVED
Date Filed : 12/27/12	This patent is subject to a Terminal Disclaimer	

Approved/Disapproved by:

Felicia D. Roberts

7,013,482

U.S. Patent and Trademark Office

RECEIVED
CENTRAL FAX CENTER
DEC 2 7 2012

Attorney Docket No.: 802-001C

IN THE UNITED STATES PATENT AND TRADEMARK OFFICE

In Re Application of: Krumel	)	
Serial No.: 12/807,641	)	
Filed: September 10, 2010	)	Examiner: Simitoski, Michael J.
For: REAL TIME FIREWALL/DATA PROTECTION SYSTEMS AND METHODS	)	Group Art Unit: 2439

Mail Stop After Final
Commissioner for Patents
P.O. Box 1450
Alexandria, VA 22313-1450

TERMINAL DISCLAIMER

Sir:

The undersigned represents that he is the Attorney of record for Application Serial No. 12/807,641.

The owner, 802 Systems, Inc., of the entire right, title and interest in U.S. Patent No(s). 7,013,482 (the "Disclaimed Patent(s)"), and in the above-captioned Application No. 12/807,641, hereby disclaim, except as provided below, the terminal part of the statutory term of any patent granted on the instant application, which would extend beyond the expiration date of the full statutory term defined in 35 U.S.C. 154 and 173, as presently shortened by any terminal disclaimer, of the Disclaimed Patent(s).

The owners hereby agree that any patent so granted on the instant application shall be enforceable only for and during such period that it and the Disclaimed Patent(s) are commonly owned. This agreement runs with any patent granted on the instant application and is binding upon the grantee, its successors or assigns.

In making the above disclaimer, the owners do not disclaim the terminal part of any patent granted on the instant application that would extend to the expiration date of the full statutory term as defined in 35 U.S.C. 154 and 173 of the Disclaimed Patent(s), as presently

12/28/2012 APEREZAM 00000027 500251 12807641
02 FC:2814 80.00 DA

DEC 27 2012

shortened by any terminal disclaimer, in the event that the Disclaimed Patent(s) later: expire(s) for failure to pay a maintenance fee, is/are held unenforceable, is/are found invalid by a court of competent jurisdiction, is/are statutorily disclaimed in whole or terminally disclaimed under 37 CFR 1.321, have all claims canceled by a reexamination certificate, is/are reissued, or are in any manner terminated prior to the expiration of its/their full statutory term as presently shortened by any terminal disclaimer.

Please charge the fee for a Terminal Disclaimer in the amount of $80.00 to Deposit Account 50-0251. Please charge any additional fees or credit any overpayment to that same account.

Respectfully submitted

Alan R. Loudermilk
Registration No. 32,788
Attorney for Applicant(s)

December 27, 2012
Loudermilk & Associates
511 N. Washington Avenue
Marshall, TX 75670
903-407-4213

I hereby certify that the foregoing is being faxed or mailed to Commissioner for Patents, P.O. Box 1450, Alexandria, VA 22313-1450, on the date indicated above.

RECEIVED
CENTRAL FAX CENTER

DEC 2 7 2012

Attorney Docket No.: 802-001C

IN THE UNITED STATES PATENT AND TRADEMARK OFFICE

In Re Application of: Krumel	)	
Serial No.: 12/807,641	)	
Filed: September 10, 2010	)	Examiner: Simitoski, Michael J.
For: REAL TIME FIREWALL/DATA PROTECTION SYSTEMS AND METHODS	)	Group Art Unit: 2439

Mail Stop After Final
Commissioner for Patents
P.O. Box 1450
Alexandria, VA 22313-1450

PETITION AND FEE FOR EXTENSION OF TIME UNDER 37 C.F.R. 1.136(a)

Dear Commissioner,

Applicant hereby petitions for a two-month extension of time in order to respond to the final office action mailed July 27, 2012. Please charge Deposit Account No. 50-0251 in the amount of $285.00 for the extension fee. An amendment responsive to the office action accompanies this submission.

Please charge any additional fees due, or credit any overpayment, to Deposit Account No. 50-0251.

Respectfully submitted

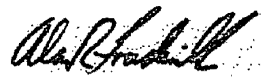

Alan R. Loudermilk
Registration No. 32,788
Attorney for Applicant(s)

December 27, 2012
Loudermilk & Associates
511 N. Washington Avenue
Marshall, Texas 75670
903-407-4213

I hereby certify that the foregoing is being deposited with the US postal service, postal prepaid, or faxed, to Commissioner for Patents, P.O. Box 1450, Alexandria, VA 22313-1450, on the date indicated above.

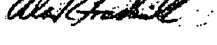

12/28/2012 APEREZAM 00000027 500251 12807641
01 FC:2252 285.00 DA

RECEIVED
CENTRAL FAX CENTER
DEC 2 7 2012

Attorney Docket No.: 802-001C

IN THE UNITED STATES PATENT AND TRADEMARK OFFICE

In Re Application of: Krumel	)	
Serial No.: 12/807,641	)	
Filed: September 10, 2010	)	Examiner: Simitoski, Michael J.
For: REAL TIME FIREWALL/DATA PROTECTION SYSTEMS AND METHODS	)	Group Art Unit: 2439

Mail Stop After Final
Commissioner for Patents
P.O. Box 1450
Alexandria, VA 22313-1450

AMENDMENT AFTER FINAL REJECTION

Sir:

In response to the final office action mailed July 27, 2012, please re-examine the above-identified application in view of the following amendment and remarks. A petition for extension of time accompanies this submission and is hereby requested.

IN THE CLAIMS:

1 – 96. (canceled)

97. (previously presented) A data protection system for filtering packets between at least an internet network and an internal network, wherein data is transmitted and received in the form of a plurality of packets, comprising:

a first interface circuit for coupling packets to and from the internet network;

a second interface circuit for coupling packets to and from the internal network;

a filtering circuit coupled between the first interface circuit and the second interface circuit;

wherein, as a packet is being received and transmitted between the first and second interface circuits, the packet is simultaneously subjected to one or more filtering criteria by the filtering circuit, wherein an end portion of the packet is selectively altered by the filtering circuit based on the filtering criteria, wherein the packet is selectively altered to be invalid if a determination has not been made as to whether the packet is valid or invalid by the time the end portion of the packet is received.

98. (previously presented) The system of claim 97, wherein the filtering criteria determine whether the packet is to be a valid packet or an invalid packet, wherein the packet is selectively altered to be invalid if it was determined that the packet should be an invalid packet.

99. (previously presented) The system of claim 97, wherein the filtering circuit includes at least first logic for determining characteristics of the packet being received and transmitted between the first and second interface circuits and at least a filter portion that subjects the packet to the plurality of filtering criteria while the packet is being received and transmitted between the first and second interface circuits.

100. (previously presented) The system of claim 99, wherein the filter portion includes at least a stateful filter portion and a non-stateful filter portion.

101. (previously presented) The system of claim 100, wherein the stateful filter portion subjects the packet to one or more stateful filtering criterion and the non-stateful filter portion subjects the packet to one or more non-stateful filtering criterion.

102. (previously presented) The system of claim 100, wherein the stateful filter portion subjects the packet to one or more stateful filtering criterion while the non-stateful filter portion subjects the packet to one or more non-stateful filtering criterion.

103. (previously presented) The system of claim 100, wherein a result aggregator logic receives one or more signals from the stateful filter portion and the non-stateful filter portion, wherein based on the received signals the result aggregator logic controls whether the packet is selectively altered to be invalid.

104. (previously presented) The system of claim 103, wherein the result aggregator logic receives a completion signal that indicates whether the stateful and/or non-stateful filter portions have subjected the packet to all of the filtering criteria.

105. (currently amended) The system of claim 104, wherein ~~, if the completion signal is not received by the result aggregator logic by a time when the end portion of the packet has been received, then~~ the packet is selectively altered by the filtering circuit to be invalid in response to the completion signal not being received by the result aggregator logic by a time when the end portion of the packet has been received.

106. (currently amended) The system of claim 97, wherein the packet is subjected to the plurality of filtering criteria in parallel with the packet being received and transmitted between the first and second interface circuits ~~, wherein a decision is made whether to selectively alter the packet to be invalid by a time when the end portion of the packet has been received~~.

107. (previously presented) The system of claim 97, wherein the packet is subjected to the plurality of filtering criteria in real time with the packet being received and transmitted between the first and second interface circuits.

108. (previously presented) The system of claim 97, further comprising one or more physical switches, wherein the packet is selectively subjected to the filtering criteria based on the state of the one or more physical switches.

109. (previously presented) The system of claim 108, wherein the state of the one or more physical switches selectively enable or disable a predetermined portion of the filtering criteria.

110. (previously presented) The system of claim 108, wherein the state of the one or more physical switches selectively enable or disable a predetermined portion of the filtering criteria based on whether a computer coupled to the internal network is controlled to operate in a client mode or a server mode.

111. (previously presented) The system of claim 108, wherein the state of the one or more physical switches selectively controls a configuration or reconfiguration operation of the

filtering circuit.

112. (previously presented) The system of claim 108, wherein the state of the one or more physical switches selectively controls a reset operation of the filtering circuit.

113. (currently amended) The system of claim 97 ~~31~~, further comprising one or more visual or audio feedback devices, wherein the one or more visual or audio feedback devices selectively provide visual or audio feedback of the operation or status of the system.

114. (previously presented) The system of claim 113, wherein the one or more visual or audio feedback devices provide visual or audio feedback that the system is powered or operational.

115. (previously presented) The system of claim 113, wherein the one or more visual or audio feedback devices provide visual or audio feedback that the system is subjecting a packet to the filtering criteria.

116. (previously presented) The system of claim 113, wherein the one or more visual or audio feedback devices provide visual or audio feedback that the system has rejected one or more packets.

117. (previously presented) The system of claim 113, wherein the one or more visual or audio feedback devices provide visual or audio feedback that a computer coupled to the internal network is suspected to be under attack.

118. (previously presented) The system of claim 117, wherein the one or more visual or audio feedback devices provide visual or audio feedback of an estimated severity of the attack.

119. (previously presented) The system of claim 113, wherein the one or more visual or audio feedback devices provide visual or audio feedback of a state of the system until the one or more visual or audio feedback devices are reset by a user.

120. (previously presented) The system of claim 119, wherein the one or more visual or audio feedback devices are reset by the state of a physical switch.

121. (previously presented) The system of claim 113, wherein the one or more visual or audio feedback devices comprise at least one light source, wherein the light source is selectively controlled to provide information indicative of the operation or status of the system.

122. (previously presented) The system of claim 121, wherein the light source is controlled to have a first color or a second color depending on the operation or status of the system.

123. (previously presented) The system of claim 121, wherein the light source is controlled to selectively blink depending on the operation or status of the system.

124. (previously presented) The system of claim 123, wherein the light source is controlled to selectively blink at a rate that is indicative of a severity level of a suspected attack on a computer coupled to the internal network.

125. (previously presented) The system of claim 121, wherein the at least one light source comprises an LED.

126. (previously presented) The system of claim 113, wherein the one or more visual or audio feedback devices comprise a speaker.

127. (previously presented) The system of claim 102, wherein the stateful filtering criteria are dependent upon physical switch position, packet characteristics, clock time and/or user-specified criteria.

128. (previously presented) The system of claim 127, wherein the user-specified criteria are entered via a physical input device.

129. (previously presented) The system of claim 128, wherein the physical input device comprises one or more switches, an audio input device, or display input device.

130. (previously presented) The system of claim 127, wherein the user specified criteria are entered via a configuration software.

131. (previously presented) The system of claim 130, wherein the user specified criteria are transferred from the configuration software to the system using a network protocol, infrared port or cable attachment.

132. (previously presented) The system of claim 129, wherein the one or more switches comprise a toggle switch, button switch or multi-state switch.

RECEIVED
CENTRAL FAX CENTER
DEC 27 2012

REMARKS

Claims 97 - 132 were examined and finally rejected on the basis of Section 112 and obviousness-type double patenting. Herein, Applicant is amending claims 105, 106 and 113 to address the informalities noted by the Examiner, and accordingly Applicant requests that the Section 112 rejections be withdrawn. Applicant further is submitting herewith a terminal disclaimer, which should obviate the double patenting rejection.

As the claims have been determined to be allowable over the cited art, no additional searching should be required by this amendment. Accordingly, entry of this amendment is requested, as is allowance of the presently pending claims.

Please contact the undersigned if there are any questions.

No new matter has been added. Please charge any additional fees due, or credit any overpayment, to Deposit Account No. 50-0251.

Respectfully submitted

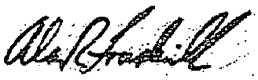

Alan R. Loudermilk
Registration No. 32,788
Attorney for Applicant(s)

December 27, 2012
Loudermilk & Associates
511 N. Washington Avenue
Marshall, Texas 75670
903-407-4213

I hereby certify that the foregoing is being deposited with the US postal service, postal prepaid, or faxed, to Commissioner for Patents, P.O. Box 1450, Alexandria, VA 22313-1450, on the date indicated above.

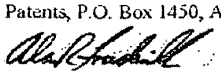

PTO/SB/06 (07-06)
Approved for use through 1/31/2007. OMB 0651-0032
U.S. Patent and Trademark Office; U.S. DEPARTMENT OF COMMERCE
Under the Paperwork Reduction Act of 1995, no persons are required to respond to a collection of information unless it displays a valid OMB control number.

PATENT APPLICATION FEE DETERMINATION RECORD Substitute for Form PTO-875	Application or Docket Number 12/807,641	Filing Date 09/10/2010	☐ To be Mailed

APPLICATION AS FILED – PART I

	(Column 1)	(Column 2)	SMALL ENTITY ☒		OR	OTHER THAN SMALL ENTITY	
FOR	NUMBER FILED	NUMBER EXTRA	RATE ($)	FEE ($)		RATE ($)	FEE ($)
☐ BASIC FEE (37 CFR 1.16(a), (b), or (c))	N/A	N/A	N/A			N/A	
☐ SEARCH FEE (37 CFR 1.16(k), (i), or (m))	N/A	N/A	N/A			N/A	
☐ EXAMINATION FEE (37 CFR 1.16(o), (p), or (q))	N/A	N/A	N/A			N/A	
TOTAL CLAIMS (37 CFR 1.16(i))	minus 20 =	*	X $ =		OR	X $ =	
INDEPENDENT CLAIMS (37 CFR 1.16(h))	minus 3 =	*	X $ =			X $ =	
☐ APPLICATION SIZE FEE (37 CFR 1.16(s))	If the specification and drawings exceed 100 sheets of paper, the application size fee due is $250 ($125 for small entity) for each additional 50 sheets or fraction thereof. See 35 U.S.C. 41(a)(1)(G) and 37 CFR 1.16(s).						
☐ MULTIPLE DEPENDENT CLAIM PRESENT (37 CFR 1.16(j))							
* If the difference in column 1 is less than zero, enter "0" in column 2.			TOTAL			TOTAL	

APPLICATION AS AMENDED – PART II

AMENDMENT	12/27/2012	(Column 1) CLAIMS REMAINING AFTER AMENDMENT		(Column 2) HIGHEST NUMBER PREVIOUSLY PAID FOR	(Column 3) PRESENT EXTRA	SMALL ENTITY RATE ($)	ADDITIONAL FEE ($)	OR	OTHER THAN SMALL ENTITY RATE ($)	ADDITIONAL FEE ($)
	Total (37 CFR 1.16(i))	* 36	Minus	** 66	=	X $ =		OR	X $ =	
	Independent (37 CFR 1.16(h))	* 1	Minus	***3	=	X $ =		OR	X $ =	
	☐ Application Size Fee (37 CFR 1.16(s))									
	☐ FIRST PRESENTATION OF MULTIPLE DEPENDENT CLAIM (37 CFR 1.16(j))							OR		
						TOTAL ADD'L FEE		OR	TOTAL ADD'L FEE	

AMENDMENT		(Column 1) CLAIMS REMAINING AFTER AMENDMENT		(Column 2) HIGHEST NUMBER PREVIOUSLY PAID FOR	(Column 3) PRESENT EXTRA	RATE ($)	ADDITIONAL FEE ($)		RATE ($)	ADDITIONAL FEE ($)
	Total (37 CFR 1.16(i))	*	Minus	**	=	X $ =		OR	X $ =	
	Independent (37 CFR 1.16(h))	*	Minus	***	=	X $ =		OR	X $ =	
	☐ Application Size Fee (37 CFR 1.16(s))									
	☐ FIRST PRESENTATION OF MULTIPLE DEPENDENT CLAIM (37 CFR 1.16(j))							OR		
						TOTAL ADD'L FEE		OR	TOTAL ADD'L FEE	

* If the entry in column 1 is less than the entry in column 2, write "0" in column 3.

** If the "Highest Number Previously Paid For" IN THIS SPACE is less than 20, enter "20".

*** If the "Highest Number Previously Paid For" IN THIS SPACE is less than 3, enter "3".

The "Highest Number Previously Paid For" (Total or Independent) is the highest number found in the appropriate box in column 1.

Legal Instrument Examiner:
/PEGGY YARBOROUGH/

This collection of information is required by 37 CFR 1.16. The information is required to obtain or retain a benefit by the public which is to file (and by the USPTO to process) an application. Confidentiality is governed by 35 U.S.C. 122 and 37 CFR 1.14. This collection is estimated to take 12 minutes to complete, including gathering, preparing, and submitting the completed application form to the USPTO. Time will vary depending upon the individual case. Any comments on the amount of time you require to complete this form and/or suggestions for reducing this burden, should be sent to the Chief Information Officer, U.S. Patent and Trademark Office, U.S. Department of Commerce, P.O. Box 1450, Alexandria, VA 22313-1450. DO NOT SEND FEES OR COMPLETED FORMS TO THIS ADDRESS. **SEND TO: Commissioner for Patents, P.O. Box 1450, Alexandria, VA 22313-1450.**

If you need assistance in completing the form, call 1-800-PTO-9199 and select option 2.

UNITED STATES PATENT AND TRADEMARK OFFICE

UNITED STATES DEPARTMENT OF COMMERCE
United States Patent and Trademark Office
Address: COMMISSIONER FOR PATENTS
P.O. Box 1450
Alexandria, Virginia 22313-1450
www.uspto.gov

APPLICATION NUMBER	PATENT NUMBER	GROUP ART UNIT	FILE WRAPPER LOCATION
12/807,641		2493	

OC000000057515783

Correspondence Address/Fee Address Change

The following fields have been set to Customer Number 107299 on 11/06/2012

- **Correspondence Address**
- **Maintenance Fee Address**

The address of record for Customer Number 107299 is:

107299
Alan R. Loudermilk
511 N. Washington Ave
Marshall, TX 75670

UNITED STATES PATENT AND TRADEMARK OFFICE

UNITED STATES DEPARTMENT OF COMMERCE
United States Patent and Trademark Office
Address: COMMISSIONER FOR PATENTS
P.O. Box 1450
Alexandria, Virginia 22313-1450
www.uspto.gov

APPLICATION NO.	FILING DATE	FIRST NAMED INVENTOR	ATTORNEY DOCKET NO.	CONFIRMATION NO.
12/807,641	09/10/2010	Andrew K. Krumel	802-001C	3474

7590 07/27/2012

Alan R. Loudermilk
Loudermilk & Associates
511 N. Washington Avenue
Marshall, TX 75670

EXAMINER	
SIMITOSKI, MICHAEL J	
ART UNIT	PAPER NUMBER
2439	

MAIL DATE	DELIVERY MODE
07/27/2012	PAPER

Please find below and/or attached an Office communication concerning this application or proceeding.

The time period for reply, if any, is set in the attached communication.

Office Action Summary	Application No.	Applicant(s)	
	12/807,641	KRUMEL, ANDREW K.	
	Examiner	Art Unit	
	MICHAEL SIMITOSKI	2439	

-- The MAILING DATE of this communication appears on the cover sheet with the correspondence address --

Period for Reply

A SHORTENED STATUTORY PERIOD FOR REPLY IS SET TO EXPIRE *3* MONTH(S) OR THIRTY (30) DAYS, WHICHEVER IS LONGER, FROM THE MAILING DATE OF THIS COMMUNICATION.

- Extensions of time may be available under the provisions of 37 CFR 1.136(a). In no event, however, may a reply be timely filed after SIX (6) MONTHS from the mailing date of this communication.
- If NO period for reply is specified above, the maximum statutory period will apply and will expire SIX (6) MONTHS from the mailing date of this communication.
- Failure to reply within the set or extended period for reply will, by statute, cause the application to become ABANDONED (35 U.S.C. § 133). Any reply received by the Office later than three months after the mailing date of this communication, even if timely filed, may reduce any earned patent term adjustment. See 37 CFR 1.704(b).

Status

1)☒ Responsive to communication(s) filed on *09 July 2012*.

2a)☒ This action is **FINAL**. 2b)☐ This action is non-final.

3)☐ An election was made by the applicant in response to a restriction requirement set forth during the interview on _____; the restriction requirement and election have been incorporated into this action.

4)☐ Since this application is in condition for allowance except for formal matters, prosecution as to the merits is closed in accordance with the practice under *Ex parte Quayle*, 1935 C.D. 11, 453 O.G. 213.

Disposition of Claims

5)☒ Claim(s) *97-132* is/are pending in the application.

5a) Of the above claim(s) _____ is/are withdrawn from consideration.

6)☐ Claim(s) _____ is/are allowed.

7)☒ Claim(s) *97-132* is/are rejected.

8)☐ Claim(s) _____ is/are objected to.

9)☐ Claim(s) _____ are subject to restriction and/or election requirement.

Application Papers

10)☐ The specification is objected to by the Examiner.

11)☒ The drawing(s) filed on *10 September 2010* is/are: a)☒ accepted or b)☐ objected to by the Examiner.

Applicant may not request that any objection to the drawing(s) be held in abeyance. See 37 CFR 1.85(a).

Replacement drawing sheet(s) including the correction is required if the drawing(s) is objected to. See 37 CFR 1.121(d).

12)☐ The oath or declaration is objected to by the Examiner. Note the attached Office Action or form PTO-152.

Priority under 35 U.S.C. § 119

13)☐ Acknowledgment is made of a claim for foreign priority under 35 U.S.C. § 119(a)-(d) or (f).

a)☐ All b)☐ Some * c)☐ None of:

1.☐ Certified copies of the priority documents have been received.

2.☐ Certified copies of the priority documents have been received in Application No. _____.

3.☐ Copies of the certified copies of the priority documents have been received in this National Stage application from the International Bureau (PCT Rule 17.2(a)).

* See the attached detailed Office action for a list of the certified copies not received.

Attachment(s)

1) ☐ Notice of References Cited (PTO-892)
2) ☐ Notice of Draftsperson's Patent Drawing Review (PTO-948)
3) ☐ Information Disclosure Statement(s) (PTO/SB/08) Paper No(s)/Mail Date _____.
4) ☐ Interview Summary (PTO-413) Paper No(s)/Mail Date. _____ .
5) ☐ Notice of Informal Patent Application
6) ☐ Other: _____.

DETAILED ACTION

1. The response of 7/9/12 was received and considered.

2. Claims 97-132 are pending.

Response to Arguments

3. Applicant's arguments with respect to claims 97-132 have been considered but are moot because the arguments do not apply to any of the claims discussed in the current rejection.

Claim Rejections - 35 USC § 112

4. The following is a quotation of the second paragraph of 35 U.S.C. 112:

> The specification shall conclude with one or more claims particularly pointing out and distinctly claiming the subject matter which the applicant regards as his invention.

5. Claims 105-106 and 113-126 are rejected under 35 U.S.C. 112, second paragraph, as being indefinite for failing to particularly point out and distinctly claim the subject matter which applicant regards as the invention.

a. Regarding claim 105, the claim is directed to a system, but beings with "if the completion signal…". However, it is unclear how a system limitation could be conditional.

b. Regarding claim 106, the claim recites "wherein the packet … wherein a decision is made...". However, this appears to be an implementation/runtime limitation, not associated with or further limiting the system. Further, the independent claim recites that the packet is found to be invalid if a decision is not made by the time the end portion of the packet is received. In this claim, a recitation that the decision is made by that time. Therefore, such a limitation would seemingly broaden the scope of the parent claim. As such, the claim is indefinite.

c. Regarding claim 113, the claim depends from a canceled claim.

Double Patenting

6. The nonstatutory double patenting rejection is based on a judicially created doctrine grounded in public policy (a policy reflected in the statute) so as to prevent the unjustified or improper timewise extension of the "right to exclude" granted by a patent and to prevent possible harassment by multiple assignees. A nonstatutory obviousness-type double patenting rejection is appropriate where the conflicting claims are not identical, but at least one examined application claim is not patentably distinct from the reference claim(s) because the examined application claim is either anticipated by, or would have been obvious over, the reference claim(s). See, e.g., *In re Berg*, 140 F.3d 1428, 46 USPQ2d 1226 (Fed. Cir. 1998); *In re Goodman*, 11 F.3d 1046, 29 USPQ2d 2010 (Fed. Cir. 1993); *In re Longi*, 759 F.2d 887, 225 USPQ 645 (Fed. Cir. 1985); *In re Van Ornum*, 686 F.2d 937, 214 USPQ 761 (CCPA 1982); *In re Vogel*, 422 F.2d 438, 164 USPQ 619 (CCPA 1970); and *In re Thorington*, 418 F.2d 528, 163 USPQ 644 (CCPA 1969).

A timely filed terminal disclaimer in compliance with 37 CFR 1.321(c) or 1.321(d) may be used to overcome an actual or provisional rejection based on a nonstatutory double patenting ground provided the conflicting application or patent either is shown to be commonly owned with this application, or claims an invention made as a result of activities undertaken within the scope of a joint research agreement.

Effective January 1, 1994, a registered attorney or agent of record may sign a terminal disclaimer. A terminal disclaimer signed by the assignee must fully comply with 37 CFR 3.73(b).

7. Claims 97-132 are rejected on the ground of nonstatutory obviousness-type double patenting as being unpatentable over claims 31-66 of U.S. Patent No. 7,013,482. Although the conflicting claims are not identical, they are not patentably distinct from each other because (in claim 1 of the patent, as compared to claim 31 of the instant application), the removal of any limitations from the patent is obvious

for reasons of breadth. Further, expanding the scope of "programmable logic device" to "filtering circuit" is an obvious variation for reasons of breadth. Lastly, as the Internet is the best known external network in the art, replacing "external network" with "internet network" is an obvious variation.

Conclusion

8. Applicant's amendment necessitated the new ground(s) of rejection presented in this Office action. Accordingly, **THIS ACTION IS MADE FINAL**. See MPEP § 706.07(a). Applicant is reminded of the extension of time policy as set forth in 37 CFR 1.136(a).

A shortened statutory period for reply to this final action is set to expire THREE MONTHS from the mailing date of this action. In the event a first reply is filed within TWO MONTHS of the mailing date of this final action and the advisory action is not mailed until after the end of the THREE-MONTH shortened statutory period, then the shortened statutory period will expire on the date the advisory action is mailed, and any extension fee pursuant to 37 CFR 1.136(a) will be calculated from the mailing date of the advisory action. In no event, however, will the statutory period for reply expire later than SIX MONTHS from the date of this final action.

Any inquiry concerning this communication or earlier communications from the examiner should be directed to MICHAEL J. SIMITOSKI whose telephone number is (571)272-3841. The examiner can normally be reached on Monday - Thursday, 6:45 a.m. - 4:15 p.m..

If attempts to reach the examiner by telephone are unsuccessful, the examiner's supervisor, Edan Orgad can be reached on (571)272-7884. The fax phone number for the organization where this application or proceeding is assigned is 571-273-8300.

Information regarding the status of an application may be obtained from the Patent Application Information Retrieval (PAIR) system. Status information for published applications may be obtained from either Private PAIR or Public PAIR. Status information for unpublished applications is available through Private PAIR only. For more information about the PAIR system, see http://pair-direct.uspto.gov. Should you have questions on access to the Private PAIR system, contact the Electronic Business Center (EBC) at 866-217-9197 (toll-free). If you would like assistance from a USPTO Customer Service Representative or access to the automated information system, call 800-786-9199 (IN USA OR CANADA) or 571-272-1000.

July 26, 2012
/Michael J Simitoski/
Primary Examiner, Art Unit 2439

Search Notes	Application/Control No.	Applicant(s)/Patent Under Reexamination
	12807641	KRUMEL, ANDREW K.
	Examiner	Art Unit
	MICHAEL SIMITOSKI	2439

SEARCHED			
Class	Subclass	Date	Examiner
713	154	7/26/2012	MJS
709	229	7/26/2012	MJS
726	11,12,13	7/26/2012	MJS

SEARCH NOTES		
Search Notes	Date	Examiner
Updated EAST search	7/26/2012	MJS
NPL search (updated)	7/26/2012	MJS
Inventor search performed	7/26/2012	MJS

INTERFERENCE SEARCH			
Class	Subclass	Date	Examiner

	/MICHAEL SIMITOSKI/ Primary Examiner.Art Unit 2439

EAST Search History

EAST Search History (Prior Art)

Ref #	Hits	Search Query	DBs	Default Operator	Plurals	Time Stamp
S266	1	"7013482".pn.	US-PGPUB; USPAT; EPO; IBM_TDB	OR	OFF	2012/07/26 05:25
S267	15	(KRUMEL near2 ANDREW).in.	US-PGPUB; USPAT; EPO; JPO; IBM_TDB	OR	ON	2012/07/26 08:38
S268	10287	726/11,12,13.ccls. 709/229.ccls. 713/154.ccls.	US-PGPUB; USPAT; EPO; JPO; IBM_TDB	OR	ON	2012/07/26 08:38
S269	5526	@ad<"20000707" and firewall (packet same (end adj portion))	US-PGPUB; USPAT; EPO; JPO; IBM_TDB	OR	ON	2012/07/26 08:40
S270	0	@ad<"20000707" and firewall and (packet same (end adj portion)) same invalid	US-PGPUB; USPAT; EPO; JPO; IBM_TDB	OR	ON	2012/07/26 08:40
S271	3	@ad<"20000707" and firewall and (packet same (end adj portion))	US-PGPUB; USPAT; EPO; JPO; IBM_TDB	OR	ON	2012/07/26 08:40

EAST Search History (Interference)

Ref #	Hits	Search Query	DBs	Default Operator	Plurals	Time Stamp
S272	10343	726/11,12,13.ccls. 709/229.ccls. 713/154.ccls.	US-PGPUB; USPAT; UPAD	OR	ON	2012/07/26 08:38
S273	3	S272 and (packet).clm. and (end adj portion).clm. and (invalid).clm.	US-PGPUB; USPAT; UPAD	OR	ON	2012/07/26 08:39

7/ 26/ 2012 8:42:01 AM
C:\ Users\ msimitoski\ Documents\ EAST\ Workspaces\ 12\ 12_807641_real_time_firewall_data_protection_system_methods.wsp

Index of Claims	Application/Control No.	Applicant(s)/Patent Under Reexamination
	12807641	KRUMEL, ANDREW K.
	Examiner	Art Unit
	MICHAEL SIMITOSKI	2439

✓	Rejected	-	Cancelled	N	Non-Elected	A	Appeal
=	Allowed	÷	Restricted	I	Interference	O	Objected

☐ Claims renumbered in the same order as presented by applicant ☐ CPA ☐ T.D. ☐ R.1.47

CLAIM		DATE								
Final	Original	03/02/2012	07/26/2012							
	67	✓	-							
	68	✓	-							
	69	✓	-							
	70	✓	-							
	71	✓	-							
	72	✓	-							
	73	✓	-							
	74	✓	-							
	75	✓	-							
	76	✓	-							
	77	✓	-							
	78	✓	-							
	79	✓	-							
	80	✓	-							
	81	✓	-							
	82	✓	-							
	83	✓	-							
	84	✓	-							
	85	✓	-							
	86	✓	-							
	87	✓	-							
	88	✓	-							
	89	✓	-							
	90	✓	-							
	91	✓	-							
	92	✓	-							
	93	✓	-							
	94	✓	-							
	95	✓	-							
	96	✓	-							
	97		✓							
	98		✓							
	99		✓							
	100		✓							
	101		✓							
	102		✓							

Index of Claims	Application/Control No.	Applicant(s)/Patent Under Reexamination
	12807641	KRUMEL, ANDREW K.
	Examiner	Art Unit
	MICHAEL SIMITOSKI	2439

✓	Rejected	-	Cancelled	N	Non-Elected	A	Appeal
=	Allowed	÷	Restricted	I	Interference	O	Objected

☐ Claims renumbered in the same order as presented by applicant ☐ CPA ☐ T.D. ☐ R.1.47

CLAIM		DATE								
Final	Original	03/02/2012	07/26/2012							
	103		✓							
	104		✓							
	105		✓							
	106		✓							
	107		✓							
	108		✓							
	109		✓							
	110		✓							
	111		✓							
	112		✓							
	113		✓							
	114		✓							
	115		✓							
	116		✓							
	117		✓							
	118		✓							
	119		✓							
	120		✓							
	121		✓							
	122		✓							
	123		✓							
	124		✓							
	125		✓							
	126		✓							
	127		✓							
	128		✓							
	129		✓							
	130		✓							
	131		✓							
	132		✓							

OPAP IAP1
JUL 0 9 2012
PATENT & TRADEMARK OFFICE

DW

Attorney Docket No.: 802-001C

IN THE UNITED STATES PATENT AND TRADEMARK OFFICE

In Re Application of: Krumel	)	
	)	
Serial No.: 12/807,641	)	
	)	
Filed: September 10, 2010	)	Examiner: Simitoski, Michael J.
	)	
For: REAL TIME FIREWALL/DATA PROTECTION SYSTEMS AND METHODS	)	Group Art Unit: 2439

Commissioner for Patents
P.O. Box 1450
Alexandria, VA 22313-1450

RESPONSE TO NOTICE TO NON-COMPLIANT AMENDMENT

Sir:

In response to the notice of non-compliant amendment mailed June 21, 2012, Applicant is resubmitting the claims portion of the amendment with the claim identifier added. To the extent required, Applicant requests a one-month extension of time and that the fee be charged to Dep. Account 50-0251.

Please contact the undersigned if there are any questions.

No new matter has been added. Please charge any additional fees due, or credit any overpayment, to Deposit Account No. 50-0251.

Respectfully submitted

Alan R. Loudermilk
Registration No. 32,788
Attorney for Applicant(s)

July 5, 2012
Loudermilk & Associates
511 N. Washington Avenue
Marshall, Texas 75670
903-407-4213

I hereby certify that the foregoing is being deposited with the US postal service, postal prepaid, or faxed, to Commissioner for Patents, P.O. Box 1450, Alexandria, VA 22313-1450, on the date indicated above.

07/10/2012 SDIRETA1 00000003 500251 12807641
01 FC:2251 75.00 DA

IN THE CLAIMS:

1 – 96. (canceled)

97. (new) A data protection system for filtering packets between at least an internet network and an internal network, wherein data is transmitted and received in the form of a plurality of packets, comprising:

a first interface circuit for coupling packets to and from the internet network;

a second interface circuit for coupling packets to and from the internal network;

a filtering circuit coupled between the first interface circuit and the second interface circuit;

wherein, as a packet is being received and transmitted between the first and second interface circuits, the packet is simultaneously subjected to one or more filtering criteria by the filtering circuit, wherein an end portion of the packet is selectively altered by the filtering circuit based on the filtering criteria, wherein the packet is selectively altered to be invalid if a determination has not been made as to whether the packet is valid or invalid by the time the end portion of the packet is received.

98. (new) The system of claim 97, wherein the filtering criteria determine whether the packet is to be a valid packet or an invalid packet, wherein the packet is selectively altered to be invalid if it was determined that the packet should be an invalid packet.

99. (new) The system of claim 97, wherein the filtering circuit includes at least first logic for determining characteristics of the packet being received and transmitted between the first and second interface circuits and at least a filter portion that subjects the packet to the plurality of filtering criteria while the packet is being received and transmitted between the first and second interface circuits.

100. (new) The system of claim 99, wherein the filter portion includes at least a stateful filter portion and a non-stateful filter portion.

101. (new) The system of claim 100, wherein the stateful filter portion subjects the packet to one or more stateful filtering criterion and the non-stateful filter portion subjects the packet to one or more non-stateful filtering criterion.

102. (new) The system of claim 100, wherein the stateful filter portion subjects the packet to one or more stateful filtering criterion while the non-stateful filter portion subjects the

packet to one or more non-stateful filtering criterion.

103. (new) The system of claim 100, wherein a result aggregator logic receives one or more signals from the stateful filter portion and the non-stateful filter portion, wherein based on the received signals the result aggregator logic controls whether the packet is selectively altered to be invalid.

104. (new) The system of claim 103, wherein the result aggregator logic receives a completion signal that indicates whether the stateful and/or non-stateful filter portions have subjected the packet to all of the filtering criteria.

105. (new) The system of claim 104, wherein, if the completion signal is not received by the result aggregator logic by a time when the end portion of the packet has been received, then the packet is selectively altered by the filtering circuit to be invalid.

106. (new) The system of claim 97, wherein the packet is subjected to the plurality of filtering criteria in parallel with the packet being received and transmitted between the first and second interface circuits, wherein a decision is made whether to selectively alter the packet to be invalid by a time when the end portion of the packet has been received.

107. (new) The system of claim 97, wherein the packet is subjected to the plurality of filtering criteria in real time with the packet being received and transmitted between the first and second interface circuits.

108. (new) The system of claim 97, further comprising one or more physical switches, wherein the packet is selectively subjected to the filtering criteria based on the state of the one or more physical switches.

109. (new) The system of claim 108, wherein the state of the one or more physical switches selectively enable or disable a predetermined portion of the filtering criteria.

110. (new) The system of claim 108, wherein the state of the one or more physical switches selectively enable or disable a predetermined portion of the filtering criteria based on whether a computer coupled to the internal network is controlled to operate in a client mode or a server mode.

111. (new) The system of claim 108, wherein the state of the one or more physical switches selectively controls a configuration or reconfiguration operation of the filtering circuit.

112. (new) The system of claim 108, wherein the state of the one or more physical

switches selectively controls a reset operation of the filtering circuit.

113. (new) The system of claim 31, further comprising one or more visual or audio feedback devices, wherein the one or more visual or audio feedback devices selectively provide visual or audio feedback of the operation or status of the system.

114. (new) The system of claim 113, wherein the one or more visual or audio feedback devices provide visual or audio feedback that the system is powered or operational.

115. (new) The system of claim 113, wherein the one or more visual or audio feedback devices provide visual or audio feedback that the system is subjecting a packet to the filtering criteria.

116. (new) The system of claim 113, wherein the one or more visual or audio feedback devices provide visual or audio feedback that the system has rejected one or more packets.

117. (new) The system of claim 113, wherein the one or more visual or audio feedback devices provide visual or audio feedback that a computer coupled to the internal network is suspected to be under attack.

118. (new) The system of claim 117, wherein the one or more visual or audio feedback devices provide visual or audio feedback of an estimated severity of the attack.

119. (new) The system of claim 113, wherein the one or more visual or audio feedback devices provide visual or audio feedback of a state of the system until the one or more visual or audio feedback devices are reset by a user.

120. (new) The system of claim 119, wherein the one or more visual or audio feedback devices are reset by the state of a physical switch.

121. (new) The system of claim 113, wherein the one or more visual or audio feedback devices comprise at least one light source, wherein the light source is selectively controlled to provide information indicative of the operation or status of the system.

122. (new) The system of claim 121, wherein the light source is controlled to have a first color or a second color depending on the operation or status of the system.

123. (new) The system of claim 121, wherein the light source is controlled to selectively blink depending on the operation or status of the system.

124. (new) The system of claim 123, wherein the light source is controlled to selectively blink at a rate that is indicative of a severity level of a suspected attack on a computer coupled to

the internal network.

125. (new) The system of claim 121, wherein the at least one light source comprises an LED.

126. (new) The system of claim 113, wherein the one or more visual or audio feedback devices comprise a speaker.

127. (new) The system of claim 102, wherein the stateful filtering criteria are dependent upon physical switch position, packet characteristics, clock time and/or user-specified criteria.

128. (new) The system of claim 127, wherein the user-specified criteria are entered via a physical input device.

129. (new) The system of claim 128, wherein the physical input device comprises one or more switches, an audio input device, or display input device.

130. (new) The system of claim 127, wherein the user specified criteria are entered via a configuration software.

131. (new) The system of claim 130, wherein the user specified criteria are transferred from the configuration software to the system using a network protocol, infrared port or cable attachment.

132. (new) The system of claim 129, wherein the one or more switches comprise a toggle switch, button switch or multi-state switch.

PTO/SB/06 (07-06)
Approved for use through 1/31/2007. OMB 0651-0032
U.S. Patent and Trademark Office; U.S. DEPARTMENT OF COMMERCE
Under the Paperwork Reduction Act of 1995, no persons are required to respond to a collection of information unless it displays a valid OMB control number.

PATENT APPLICATION FEE DETERMINATION RECORD

Substitute for Form PTO-875

Application or Docket Number	Filing Date	☐ To be Mailed
12/807,641	09/10/2010	

APPLICATION AS FILED – PART I

	(Column 1)	(Column 2)	SMALL ENTITY ☒		OR	OTHER THAN SMALL ENTITY	
FOR	NUMBER FILED	NUMBER EXTRA	RATE ($)	FEE ($)		RATE ($)	FEE ($)
☐ BASIC FEE (37 CFR 1.16(a), (b), or (c))	N/A	N/A	N/A			N/A	
☐ SEARCH FEE (37 CFR 1.16(k), (i), or (m))	N/A	N/A	N/A			N/A	
☐ EXAMINATION FEE (37 CFR 1.16(o), (p), or (q))	N/A	N/A	N/A			N/A	
TOTAL CLAIMS (37 CFR 1.16(i))	minus 20 =	*	X $ =		OR	X $ =	
INDEPENDENT CLAIMS (37 CFR 1.16(h))	minus 3 =	*	X $ =			X $ =	
☐ APPLICATION SIZE FEE (37 CFR 1.16(s))	If the specification and drawings exceed 100 sheets of paper, the application size fee due is $250 ($125 for small entity) for each additional 50 sheets or fraction thereof. See 35 U.S.C. 41(a)(1)(G) and 37 CFR 1.16(s).						
☐ MULTIPLE DEPENDENT CLAIM PRESENT (37 CFR 1.16(j))							
* If the difference in column 1 is less than zero, enter "0" in column 2.			TOTAL			TOTAL	

APPLICATION AS AMENDED – PART II

AMENDMENT	07/09/2012	(Column 1) CLAIMS REMAINING AFTER AMENDMENT		(Column 2) HIGHEST NUMBER PREVIOUSLY PAID FOR	(Column 3) PRESENT EXTRA	SMALL ENTITY RATE ($)	ADDITIONAL FEE ($)	OR	OTHER THAN SMALL ENTITY RATE ($)	ADDITIONAL FEE ($)
	Total (37 CFR 1.16(i))	* 36	Minus	** 66	= 0	X $30 =	0	OR	X $ =	
	Independent (37 CFR 1.16(h))	* 1	Minus	***3	= 0	X $125 =	0	OR	X $ =	
	☐ Application Size Fee (37 CFR 1.16(s))									
	☐ FIRST PRESENTATION OF MULTIPLE DEPENDENT CLAIM (37 CFR 1.16(j))							OR		
						TOTAL ADD'L FEE	0	OR	TOTAL ADD'L FEE	

AMENDMENT		(Column 1) CLAIMS REMAINING AFTER AMENDMENT		(Column 2) HIGHEST NUMBER PREVIOUSLY PAID FOR	(Column 3) PRESENT EXTRA	RATE ($)	ADDITIONAL FEE ($)	OR	RATE ($)	ADDITIONAL FEE ($)
	Total (37 CFR 1.16(i))	*	Minus	**	=	X $ =		OR	X $ =	
	Independent (37 CFR 1.16(h))	*	Minus	***	=	X $ =		OR	X $ =	
	☐ Application Size Fee (37 CFR 1.16(s))									
	☐ FIRST PRESENTATION OF MULTIPLE DEPENDENT CLAIM (37 CFR 1.16(j))							OR		
						TOTAL ADD'L FEE		OR	TOTAL ADD'L FEE	

* If the entry in column 1 is less than the entry in column 2, write "0" in column 3.

** If the "Highest Number Previously Paid For" IN THIS SPACE is less than 20, enter "20".

*** If the "Highest Number Previously Paid For" IN THIS SPACE is less than 3, enter "3".

The "Highest Number Previously Paid For" (Total or Independent) is the highest number found in the appropriate box in column 1.

Legal Instrument Examiner:
/MAMYE WAGSTAFF/

This collection of information is required by 37 CFR 1.16. The information is required to obtain or retain a benefit by the public which is to file (and by the USPTO to process) an application. Confidentiality is governed by 35 U.S.C. 122 and 37 CFR 1.14. This collection is estimated to take 12 minutes to complete, including gathering, preparing, and submitting the completed application form to the USPTO. Time will vary depending upon the individual case. Any comments on the amount of time you require to complete this form and/or suggestions for reducing this burden, should be sent to the Chief Information Officer, U.S. Patent and Trademark Office, U.S. Department of Commerce, P.O. Box 1450, Alexandria, VA 22313-1450. DO NOT SEND FEES OR COMPLETED FORMS TO THIS ADDRESS. **SEND TO: Commissioner for Patents, P.O. Box 1450, Alexandria, VA 22313-1450.**

If you need assistance in completing the form, call 1-800-PTO-9199 and select option 2.

UNITED STATES PATENT AND TRADEMARK OFFICE

UNITED STATES DEPARTMENT OF COMMERCE
U.S. Patent and Trademark Office
Address: COMMISSIONER FOR PATENTS
P.O. Box 1450
Alexandria, Virginia 22313-1450
www.uspto.gov

e 2012-06-21

Alan R. Loudermilk
Loudermilk & Associates
511 N. Washington Avenue
Marshall, TX 75670

Paper No.

Application No.:	**12/807,641**	**Date Mailed:**	**2012-06-21**
First Named Inventor:	Krumel, Andrew, K.	Examiner:	SIMITOSKI, MICHAEL J
Attorney Docket No.:	802-001C	Art Unit:	2439
Confirmation No.:	3474	Filing Date:	2010-09-10

Please find attached an Office communication concerning this application or proceeding.

Commissioner for Patents

PTO-90c (Rev.08-06)

Notice of Non-Compliant Amendment (37 CFR 1.121)	Application No. 12/807,641	Applicant(s) KRUMEL, ANDREW K.
		Art Unit 1600

-- The MAILING DATE of this communication appears on the cover sheet with the correspondence address --

The amendment document filed on *11 June, 2012* is considered non-compliant because it has failed to meet the requirements of 37 CFR 1.121 or 1.4. In order for the amendment document to be compliant, correction of the following item(s) is required.

THE FOLLOWING MARKED (X) ITEM(S) CAUSE THE AMENDMENT DOCUMENT TO BE NON-COMPLIANT:

- ☐ 1. Amendments to the specification:
  - ☐ A. Amended paragraph(s) do not include markings.
  - ☐ B. New paragraph(s) should not be underlined.
  - ☐ C. Other _____.
- ☐ 2. Abstract:
  - ☐ A. Not presented on a separate sheet. 37 CFR 1.72.
  - ☐ B. Other _____.
- ☐ 3. Amendments to the drawings:
  - ☐ A. The drawings are not properly identified in the top margin as "Replacement Sheet," "New Sheet," or "Annotated Sheet" as required by 37 CFR 1.121(d).
  - ☐ B. The practice of submitting proposed drawing correction has been eliminated. Replacement drawings showing amended figures, without markings, in compliance with 37 CFR 1.84 are required.
  - ☐ C. Other _____.
- ☒ 4. Amendments to the claims:
  - ☐ A. A complete listing of all of the claims is not present.
  - ☐ B. The listing of claims does not include the text of all pending claims (including withdrawn claims)
  - ☒ C. Each claim has not been provided with the proper status identifier, and as such, the individual status of each claim cannot be identified. Note: the status of every claim must be indicated after its claim number by using one of the following status identifiers: (Original), (Currently amended), (Canceled), (Previously presented), (New), (Not entered), (Withdrawn) and (Withdrawn-currently amended).
  - ☐ D. The claims of this amendment paper have not been presented in ascending numerical order.
  - ☐ E. Other: _____.
- ☐ 5. Other (e.g., the amendment is unsigned or not signed in accordance with 37 CFR 1.4): For further explanation of the amendment format required by 37 CFR 1.121, see MPEP § 714.

TIME PERIODS FOR FILING A REPLY TO THIS NOTICE:

1. Applicant is given **no new time period if the non-compliant amendment is an** after-final amendment or an amendment filed after allowance, or a drawing submission (only) If applicant wishes to resubmit the non-compliant after-final amendment with corrections, the **entire corrected amendment** must be resubmitted.

2. Applicant is given **one month**, or thirty (30) days, whichever is longer, from the mail date of this notice to supply the correction, if the non-compliant amendment is one of the following: a preliminary amendment, a non-final amendment (including a submission for a request for continued examination (RCE) under 37 CFR 1.114), a supplemental amendment filed within a suspension period under 37 CFR 1.103(a) or (c), and an amendment filed in response to a Quayle action. If any of above boxes 1 to 4 are checked, the correction required is only the corrected section of the non-compliant amendment in compliance with 37 CFR 1.121.

   Extensions of time are available under 37 CFR 1.136(a) only if the non-compliant amendment is a non-final amendment or an amendment filed in response to a *Quayle* action.
   Failure to timely respond to this notice will result in:
   Abandonment of the application if the non-compliant amendment is a non-final amendment or an amendment filed in response to a *Quayle* action; or
   Non-entry of the amendment if the non-compliant amendment is a preliminary amendment or supplemental amendment.

Legal Instruments Examiner (LIE), if applicable /KIM DOWNING/ Telephone No: (571)272-0521

IFW

Attorney Docket No.: 802-001C

IN THE UNITED STATES PATENT AND TRADEMARK OFFICE

In Re Application of: Krumel	)	
Serial No.: 12/807,641	)	
Filed: September 10, 2010	)	Examiner:
For: REAL TIME FIREWALL/DATA PROTECTION SYSTEMS AND METHODS	)	Group Art Unit:

Commissioner for Patents
P.O. Box 1450
Alexandria, VA 22313-1450

AMENDMENT

Sir:

In response to the office action mailed March 6, 2012, please re-examine the above-identified application in view of the following amendment and remarks.

IN THE CLAIMS:

1 – 96. (canceled)

97. A data protection system for filtering packets between at least an internet network and an internal network, wherein data is transmitted and received in the form of a plurality of packets, comprising:

a first interface circuit for coupling packets to and from the internet network;

a second interface circuit for coupling packets to and from the internal network;

a filtering circuit coupled between the first interface circuit and the second interface circuit;

wherein, as a packet is being received and transmitted between the first and second interface circuits, the packet is simultaneously subjected to one or more filtering criteria by the filtering circuit, wherein an end portion of the packet is selectively altered by the filtering circuit based on the filtering criteria, wherein the packet is selectively altered to be invalid if a determination has not been made as to whether the packet is valid or invalid by the time the end portion of the packet is received.

98. The system of claim 97, wherein the filtering criteria determine whether the packet is to be a valid packet or an invalid packet, wherein the packet is selectively altered to be invalid if it was determined that the packet should be an invalid packet.

99. The system of claim 97, wherein the filtering circuit includes at least first logic for determining characteristics of the packet being received and transmitted between the first and second interface circuits and at least a filter portion that subjects the packet to the plurality of filtering criteria while the packet is being received and transmitted between the first and second interface circuits.

100. The system of claim 99, wherein the filter portion includes at least a stateful filter portion and a non-stateful filter portion.

101. The system of claim 100, wherein the stateful filter portion subjects the packet to one or more stateful filtering criterion and the non-stateful filter portion subjects the packet to one or more non-stateful filtering criterion.

102. The system of claim 100, wherein the stateful filter portion subjects the packet to one or more stateful filtering criterion while the non-stateful filter portion subjects the packet to

one or more non-stateful filtering criterion.

103. The system of claim 100, wherein a result aggregator logic receives one or more signals from the stateful filter portion and the non-stateful filter portion, wherein based on the received signals the result aggregator logic controls whether the packet is selectively altered to be invalid.

104. The system of claim 103, wherein the result aggregator logic receives a completion signal that indicates whether the stateful and/or non-stateful filter portions have subjected the packet to all of the filtering criteria.

105. The system of claim 104, wherein, if the completion signal is not received by the result aggregator logic by a time when the end portion of the packet has been received, then the packet is selectively altered by the filtering circuit to be invalid.

106. The system of claim 97, wherein the packet is subjected to the plurality of filtering criteria in parallel with the packet being received and transmitted between the first and second interface circuits, wherein a decision is made whether to selectively alter the packet to be invalid by a time when the end portion of the packet has been received.

107. The system of claim 97, wherein the packet is subjected to the plurality of filtering criteria in real time with the packet being received and transmitted between the first and second interface circuits.

108. The system of claim 97, further comprising one or more physical switches, wherein the packet is selectively subjected to the filtering criteria based on the state of the one or more physical switches.

109. The system of claim 108, wherein the state of the one or more physical switches selectively enable or disable a predetermined portion of the filtering criteria.

110. The system of claim 108, wherein the state of the one or more physical switches selectively enable or disable a predetermined portion of the filtering criteria based on whether a computer coupled to the internal network is controlled to operate in a client mode or a server mode.

111. The system of claim 108, wherein the state of the one or more physical switches selectively controls a configuration or reconfiguration operation of the filtering circuit.

112. The system of claim 108, wherein the state of the one or more physical switches

selectively controls a reset operation of the filtering circuit.

113. The system of claim 31, further comprising one or more visual or audio feedback devices, wherein the one or more visual or audio feedback devices selectively provide visual or audio feedback of the operation or status of the system.

114. The system of claim 113, wherein the one or more visual or audio feedback devices provide visual or audio feedback that the system is powered or operational.

115. The system of claim 113, wherein the one or more visual or audio feedback devices provide visual or audio feedback that the system is subjecting a packet to the filtering criteria.

116. The system of claim 113, wherein the one or more visual or audio feedback devices provide visual or audio feedback that the system has rejected one or more packets.

117. The system of claim 113, wherein the one or more visual or audio feedback devices provide visual or audio feedback that a computer coupled to the internal network is suspected to be under attack.

118. The system of claim 117, wherein the one or more visual or audio feedback devices provide visual or audio feedback of an estimated severity of the attack.

119. The system of claim 113, wherein the one or more visual or audio feedback devices provide visual or audio feedback of a state of the system until the one or more visual or audio feedback devices are reset by a user.

120. The system of claim 119, wherein the one or more visual or audio feedback devices are reset by the state of a physical switch.

121. The system of claim 113, wherein the one or more visual or audio feedback devices comprise at least one light source, wherein the light source is selectively controlled to provide information indicative of the operation or status of the system.

122. The system of claim 121, wherein the light source is controlled to have a first color or a second color depending on the operation or status of the system.

123. The system of claim 121, wherein the light source is controlled to selectively blink depending on the operation or status of the system.

124. The system of claim 123, wherein the light source is controlled to selectively blink at a rate that is indicative of a severity level of a suspected attack on a computer coupled to

the internal network.

125. The system of claim 121, wherein the at least one light source comprises an LED.

126. The system of claim 113, wherein the one or more visual or audio feedback devices comprise a speaker.

127. The system of claim 102, wherein the stateful filtering criteria are dependent upon physical switch position, packet characteristics, clock time and/or user-specified criteria.

128. The system of claim 127, wherein the user-specified criteria are entered via a physical input device.

129. The system of claim 128, wherein the physical input device comprises one or more switches, an audio input device, or display input device.

130. The system of claim 127, wherein the user specified criteria are entered via a configuration software.

131. The system of claim 130, wherein the user specified criteria are transferred from the configuration software to the system using a network protocol, infrared port or cable attachment.

132. The system of claim 129, wherein the one or more switches comprise a toggle switch, button switch or multi-state switch.

REMARKS

Claims 67 – 96 were examined. Claim 68 was indicated as allowable over the cited references, while the remaining claims were rejected in view of various prior art references and in view of obviousness-type double patenting.

While Applicant respectfully traverses the prior art rejections (and the double patenting rejection, subject to Applicant considering a terminal disclaimer if needed in view of the amendments herein), Applicant wishes to thank the Examiner for the indication of allowable subject matter in claim 68. In view of this, and in order to expedite prosecution, Applicant has canceled claims 67 – 96 and added new independent claim 97, and added new dependent claims 98 – 132, to more fully claim Applicant's invention consistent with the allowable subject matter. For example, independent claim 97 recites "wherein the packet is selectively altered to be invalid if a determination has not been made as to whether the packet is valid or invalid by the time the end portion of the packet is received." Accordingly, Applicant submits that the invention defined by the currently pending claims is patentable over the cited references, for this and other features in the pending claims.

Reconsideration and allowance is requested. Upon examination of this amendment, Applicant's attorney would like to discuss with the Examiner the need for a terminal disclaimer in view of this amendment. Please contact the undersigned if there are any questions.

No new matter has been added. Please charge any additional fees due, or credit any overpayment, to Deposit Account No. 50-0251.

Respectfully submitted

Alan R. Loudermilk
Registration No. 32,788
Attorney for Applicant(s)

June 6, 2012
Loudermilk & Associates
511 N. Washington Avenue
Marshall, Texas 75670
903-407-4213

I hereby certify that the foregoing is being deposited with the US postal service, postal prepaid, or faxed, to Commissioner for Patents, P.O. Box 1450, Alexandria, VA 22313-1450, on the date indicated above.

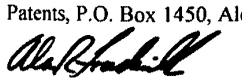

PTO/SB/06 (07-06)
Approved for use through 1/31/2007. OMB 0651-0032
U.S. Patent and Trademark Office; U.S. DEPARTMENT OF COMMERCE
Under the Paperwork Reduction Act of 1995, no persons are required to respond to a collection of information unless it displays a valid OMB control number.

PATENT APPLICATION FEE DETERMINATION RECORD Substitute for Form PTO-875	Application or Docket Number 12/807,641	Filing Date 09/10/2010	☐ To be Mailed

APPLICATION AS FILED – PART I

	(Column 1)	(Column 2)	SMALL ENTITY ☒		OR	OTHER THAN SMALL ENTITY	
FOR	NUMBER FILED	NUMBER EXTRA	RATE ($)	FEE ($)		RATE ($)	FEE ($)
☐ BASIC FEE (37 CFR 1.16(a), (b), or (c))	N/A	N/A	N/A			N/A	
☐ SEARCH FEE (37 CFR 1.16(k), (i), or (m))	N/A	N/A	N/A			N/A	
☐ EXAMINATION FEE (37 CFR 1.16(o), (p), or (q))	N/A	N/A	N/A			N/A	
TOTAL CLAIMS (37 CFR 1.16(i))	minus 20 =	*	X $ =		OR	X $ =	
INDEPENDENT CLAIMS (37 CFR 1.16(h))	minus 3 =	*	X $ =			X $ =	
☐ APPLICATION SIZE FEE (37 CFR 1.16(s))	If the specification and drawings exceed 100 sheets of paper, the application size fee due is $250 ($125 for small entity) for each additional 50 sheets or fraction thereof. See 35 U.S.C. 41(a)(1)(G) and 37 CFR 1.16(s).						
☐ MULTIPLE DEPENDENT CLAIM PRESENT (37 CFR 1.16(j))							
* If the difference in column 1 is less than zero, enter "0" in column 2.			TOTAL			TOTAL	

APPLICATION AS AMENDED – PART II

		(Column 1)		(Column 2)	(Column 3)	SMALL ENTITY		OR	OTHER THAN SMALL ENTITY	
AMENDMENT	06/11/2012	CLAIMS REMAINING AFTER AMENDMENT		HIGHEST NUMBER PREVIOUSLY PAID FOR	PRESENT EXTRA	RATE ($)	ADDITIONAL FEE ($)		RATE ($)	ADDITIONAL FEE ($)
	Total (37 CFR 1.16(i))	* 30	Minus	** 66	= 0	X $30 =	0	OR	X $ =	
	Independent (37 CFR 1.16(h))	* 2	Minus	***3	= 0	X $125 =	0	OR	X $ =	
	☐ Application Size Fee (37 CFR 1.16(s))									
	☐ FIRST PRESENTATION OF MULTIPLE DEPENDENT CLAIM (37 CFR 1.16(j))							OR		
						TOTAL ADD'L FEE	0	OR	TOTAL ADD'L FEE	

		(Column 1)		(Column 2)	(Column 3)					
AMENDMENT		CLAIMS REMAINING AFTER AMENDMENT		HIGHEST NUMBER PREVIOUSLY PAID FOR	PRESENT EXTRA	RATE ($)	ADDITIONAL FEE ($)		RATE ($)	ADDITIONAL FEE ($)
	Total (37 CFR 1.16(i))	*	Minus	**	=	X $ =		OR	X $ =	
	Independent (37 CFR 1.16(h))	*	Minus	***	=	X $ =		OR	X $ =	
	☐ Application Size Fee (37 CFR 1.16(s))									
	☐ FIRST PRESENTATION OF MULTIPLE DEPENDENT CLAIM (37 CFR 1.16(j))							OR		
						TOTAL ADD'L FEE		OR	TOTAL ADD'L FEE	

* If the entry in column 1 is less than the entry in column 2, write "0" in column 3.

** If the "Highest Number Previously Paid For" IN THIS SPACE is less than 20, enter "20".

*** If the "Highest Number Previously Paid For" IN THIS SPACE is less than 3, enter "3".

The "Highest Number Previously Paid For" (Total or Independent) is the highest number found in the appropriate box in column 1.

Legal Instrument Examiner:
/KIM DOWNING/

This collection of information is required by 37 CFR 1.16. The information is required to obtain or retain a benefit by the public which is to file (and by the USPTO to process) an application. Confidentiality is governed by 35 U.S.C. 122 and 37 CFR 1.14. This collection is estimated to take 12 minutes to complete, including gathering, preparing, and submitting the completed application form to the USPTO. Time will vary depending upon the individual case. Any comments on the amount of time you require to complete this form and/or suggestions for reducing this burden, should be sent to the Chief Information Officer, U.S. Patent and Trademark Office, U.S. Department of Commerce, P.O. Box 1450, Alexandria, VA 22313-1450. DO NOT SEND FEES OR COMPLETED FORMS TO THIS ADDRESS. **SEND TO: Commissioner for Patents, P.O. Box 1450, Alexandria, VA 22313-1450.**

If you need assistance in completing the form, call 1-800-PTO-9199 and select option 2.

UNITED STATES PATENT AND TRADEMARK OFFICE

UNITED STATES DEPARTMENT OF COMMERCE
United States Patent and Trademark Office
Address: COMMISSIONER FOR PATENTS
P.O. Box 1450
Alexandria, Virginia 22313-1450
www.uspto.gov

APPLICATION NO.	FILING DATE	FIRST NAMED INVENTOR	ATTORNEY DOCKET NO.	CONFIRMATION NO.
12/807,641	09/10/2010	Andrew K. Krumel	802-001C	3474

7590 03/06/2012

Alan R. Loudermilk
Loudermilk & Associates
511 N. Washington Avenue
Marshall, TX 75670

EXAMINER	
SIMITOSKI, MICHAEL J	
ART UNIT	PAPER NUMBER
2439	

MAIL DATE	DELIVERY MODE
03/06/2012	PAPER

Please find below and/or attached an Office communication concerning this application or proceeding.

The time period for reply, if any, is set in the attached communication.

Office Action Summary	Application No.	Applicant(s)	
	12/807,641	KRUMEL, ANDREW K.	
	Examiner	Art Unit	
	MICHAEL SIMITOSKI	2439	

-- The MAILING DATE of this communication appears on the cover sheet with the correspondence address --

Period for Reply

A SHORTENED STATUTORY PERIOD FOR REPLY IS SET TO EXPIRE 3 MONTH(S) OR THIRTY (30) DAYS, WHICHEVER IS LONGER, FROM THE MAILING DATE OF THIS COMMUNICATION.

- Extensions of time may be available under the provisions of 37 CFR 1.136(a). In no event, however, may a reply be timely filed after SIX (6) MONTHS from the mailing date of this communication.
- If NO period for reply is specified above, the maximum statutory period will apply and will expire SIX (6) MONTHS from the mailing date of this communication.
- Failure to reply within the set or extended period for reply will, by statute, cause the application to become ABANDONED (35 U.S.C. § 133). Any reply received by the Office later than three months after the mailing date of this communication, even if timely filed, may reduce any earned patent term adjustment. See 37 CFR 1.704(b).

Status

1)☒ Responsive to communication(s) filed on *10 September 2010*.

2a)☐ This action is **FINAL**. 2b)☒ This action is non-final.

3)☐ An election was made by the applicant in response to a restriction requirement set forth during the interview on _____; the restriction requirement and election have been incorporated into this action.

4)☐ Since this application is in condition for allowance except for formal matters, prosecution as to the merits is closed in accordance with the practice under *Ex parte Quayle*, 1935 C.D. 11, 453 O.G. 213.

Disposition of Claims

5)☒ Claim(s) *67-96* is/are pending in the application.

5a) Of the above claim(s) _____ is/are withdrawn from consideration.

6)☐ Claim(s) _____ is/are allowed.

7)☒ Claim(s) *67-96* is/are rejected.

8)☐ Claim(s) _____ is/are objected to.

9)☐ Claim(s) _____ are subject to restriction and/or election requirement.

Application Papers

10)☐ The specification is objected to by the Examiner.

11)☒ The drawing(s) filed on *10 September 2010* is/are: a)☒ accepted or b)☐ objected to by the Examiner.

Applicant may not request that any objection to the drawing(s) be held in abeyance. See 37 CFR 1.85(a).

Replacement drawing sheet(s) including the correction is required if the drawing(s) is objected to. See 37 CFR 1.121(d).

12)☐ The oath or declaration is objected to by the Examiner. Note the attached Office Action or form PTO-152.

Priority under 35 U.S.C. § 119

13)☐ Acknowledgment is made of a claim for foreign priority under 35 U.S.C. § 119(a)-(d) or (f).

a)☐ All b)☐ Some * c)☐ None of:

1.☐ Certified copies of the priority documents have been received.

2.☐ Certified copies of the priority documents have been received in Application No. _____.

3.☐ Copies of the certified copies of the priority documents have been received in this National Stage application from the International Bureau (PCT Rule 17.2(a)).

* See the attached detailed Office action for a list of the certified copies not received.

Attachment(s)

1) ☒ Notice of References Cited (PTO-892)
2) ☐ Notice of Draftsperson's Patent Drawing Review (PTO-948)
3) ☒ Information Disclosure Statement(s) (PTO/SB/08) Paper No(s)/Mail Date *4/8/11*.
4) ☐ Interview Summary (PTO-413) Paper No(s)/Mail Date. _____ .
5) ☐ Notice of Informal Patent Application
6) ☐ Other: _____.

DETAILED ACTION

1. The IDS of 4/8/2011 was received and considered.

2. Claims 67-96 are pending.

Claim Rejections - 35 USC § 102

3. The following is a quotation of the appropriate paragraphs of 35 U.S.C. 102 that form the basis for the rejections under this section made in this Office action:

> A person shall be entitled to a patent unless –
>
> (b) the invention was patented or described in a printed publication in this or a foreign country or in public use or on sale in this country, more than one year prior to the date of application for patent in the United States.

4. Claims 67, 69-70 and 80-82 are rejected under 35 U.S.C. 102(b) as being anticipated by "Design and Evaluation of a High-Performance ATM Firewall Switch and Its Applications" by Xu et al. (**Xu**).

Regarding claim 67, Xu discloses a method for communicating data between an external computing system and an internal computing system over a packet-based network, wherein data is transmitted and received in the form of a plurality of packets (pp. 1198-1199, §V), the method comprising the steps of: receiving a packet from the external computing system over the network (from ATM public WAN, p. 1199), the packet having at least a first portion and an end portion (first and last cell, p. 1191, §B), and transmitting the packet to the internal computing system (cells are passed, p. 1191, §B); in parallel with the step of receiving and transmitting the packet, determining characteristics of the packet from the first portion (header information, p. 1191, §B); in parallel with the step of receiving and transmitting the packet, performing one or more checks on the packet (inspection, p. 1191, §B); in parallel with the step of receiving and transmitting the packet, determining if the packet should be a valid packet or an invalid packet based on the one or more checks (switch is transmitting the packet cells, except the last, while inspection is taking place, p. 1191, §B), wherein the packet is analyzed in real time to determine if the packet should be valid or invalid while the packet is being concurrently transmitted to the

internal computing system (all cells except the last are allowed to pass during inspection, p. 1191, §B, where the inspection is finished before the last cell arrives, p. 1191, ¶2); and after receiving the end portion of the packet, selectively altering the end portion of the packet based on whether the packet has been determined to be a valid packet or an invalid packet, wherein the packet is selectively altered to be invalid if it was determined that the packet should be an invalid packet (last cell is kept "hostage" and, after a decision is made that the packet is unsafe/invalid, the last cell is replace with randomly-generated data so that the receiver will drop the packet as a result of a CRC failure, p. 1191, §B).

Regarding claim 69, Xu discloses wherein the packet is analyzed to determine if the packet is valid without the packet having been completely received and buffered (explicitly stated as a benefit over the art, p. 1191, §B).

Regarding claim 70, Xu discloses wherein the packet is determined to be an invalid packet if it is determined that the packet contains a virus, is unauthorized or presents a risk of harm to the internal computing system (malicious packet, p. 1192, ¶2).

Regarding claim 80, Xu discloses wherein the one or more checks are selectively performed based on a communication state between the external computing system and the internal computing system (first or second cell, p. 1192, ¶2 and address port information, p. 1191, §A).

Regarding claim 81, Xu discloses wherein the communication state comprises one or more network addresses and/or one or more port numbers (source and destination address, p. 1191, §A).

Regarding claim 82, Xu discloses wherein the network address comprises an IP address for the external computing system and/or the internal computing system (p. 1191, §A).

Claim Rejections - 35 USC § 103

5. The following is a quotation of 35 U.S.C. 103(a) which forms the basis for all obviousness rejections set forth in this Office action:

> (a) A patent may not be obtained though the invention is not identically disclosed or described as set forth in section 102 of this title, if the differences between the subject matter sought to be patented and the prior art are such that the subject matter as a whole would have been obvious at the time the invention was made to a person having ordinary skill in the art to which said subject matter pertains. Patentability shall not be negatived by the manner in which the invention was made.

6. Claims 71-74, 76, 83-85, 91-93 and 95-96 are rejected under 35 U.S.C. 103(a) as being unpatentable over **Xu**, as applied to claim 67 above, in view of "PacketShaper 4000 Getting Started Version 4.0" by **Packeteer**.

Regarding claims 71-74 and 76, Xu lacks wherein the one or more checks are at least in part selectively performed based on a state of a physical switch. However, Packeteer teaches that it is known to include a power switch to enable/disable function of a device, such as an on/off switch (p. 7). Therefore, it would have been obvious to one having ordinary skill in the art at the time the invention was made to include an on/off toggle switch, thereby affecting the checks based on the state of the switch, affecting the configuration of the checking circuit (on/off), enabling/disabling the checks (on/off). The plurality of checks would selectively perform based on the state an on/off switch. An on/off switch would also control the configuration (on/off). One of ordinary skill in the art would have been motivated to perform such a modification, as it was well known in the art to do so, as taught by Packeteer.

Regarding claims 83-85, 91-92, 95, Xu lacks providing visual or audio feedback with one or more visual or audio feedback devices, wherein the one or more visual or audio feedback devices selectively provide visual or audio feedback of the operation or status of a packet filter process. However, Packeteer teaches that it is known in the art to provide a "status LED", being green or amber in color depending on whether shaping (filtering) is on/operational (p. 41) on a hardware packet-shaper/packet-filter (p. 1). Therefore, it would have been obvious to one having ordinary skill in the art at the time the invention was made to include a status LED in Xu's system. One of ordinary skill in the art would have been motivated to perform such a modification to convey status information, as was known in the art, as taught by Packeteer.

Regarding claim 93, Xu lacks a light source that is selectively controlled to blink depending on the operating status. However, Packeteer teaches that it is known to include "network LEDs" to that flicker/blink when transmission or receiving activity occurs (p. 41) in a hardware packet-shaper/packet-filter (p. 1). Therefore, it would have been obvious to one having ordinary skill in the art at the time the invention was made to include network LEDs in Xu's system. One of ordinary skill in the art would have been motivated to perform such a modification to convey activity information, as was known in the art, as taught by Packeteer.

Regarding claim 96, Xu lacks a speaker to provide feedback. However, it was known in the art, at the time the invention was made, to provide a speaker, such as a PC main board speaker, to provide audio feedback (for example on errors), for the purpose of interacting and alerting a human user. Therefore, it would have been obvious to one having ordinary skill in the art at the time the invention was made to use a speaker in Xu's system to provide feedback. One of ordinary skill in the art would have been motivated to perform such a modification as it was known in the art to do so.

7. Claim 75 is rejected under 35 U.S.C. 103(a) as being unpatentable over **Xu** and **Packeteer**, as applied to claim 73 above, in view of U.S. Patent 6,052,788 to Wesinger, Jr. et al. (**Wesinger**).

Regarding claim 75, Xu discloses a system, as modified above to include a user-controlled switch such as a power switch, but lacks wherein the circuit that performs the one or more checks is configured or reconfigured based on commands from the internal computing system and based on a state of the at least one user-controlled switch. However, Wesinger that configuration of firewalls may be easily accomplished by running a "configurator" which provides a Web-based front-end for editing configuration files, preferably from a secured client (col. 9 lines 31-46). Therefore, it would have been obvious to one having ordinary skill in the art at the time the invention was made to allow changing of the firewall's configuration based on commands from the internal computing system/LAN/secure client

(through a Web-browser interface). One of ordinary skill in the art would have been motivated to perform such a modification to easily accomplish firewall configuration, as taught by Wesinger (col. 9 lines 31-46).

8. Claims 77-79 are rejected under 35 U.S.C. 103(a) as being unpatentable over **Xu**, as applied to claim 67 above, in view of U.S. Patent 6,795,918 to **Trolan**.

Regarding claim 77, Xu lacks wherein the one or more checks are performed with a programmable logic device, wherein logic within the programmable logic device is selectively programmed to perform the one or more checks in parallel with the receiving and transmitting of the packet. However, Trolan teaches a packet analyzer, where inspection is performed based on data in a programmable logic device (col. 6, lines 6-10, coll. 7, lines 17-26), allowing additional security (col. 7, lines 30-34). Therefore, it would have been obvious to one having ordinary skill in the art at the time the invention was made to modify Xu such that the one or more checks are performed with a programmable logic device implementing IM/OM (Xu, p. 1192, §III), wherein logic within the programmable logic device is selectively programmed to perform the one or more checks in parallel with the receiving and transmitting of the packet. One of ordinary skill in the art would have been motivated to perform such a modification to allow physical security, as taught by Trolan. It is further noted that PLDs are known in the art to provide the speed of a hardware implementation, while still allowing reprogramming.

Regarding claim 78, Xu discloses wherein a first physical interface circuit receives the packet from the network (IM, p. 1192, Fig. 2), wherein the packet is coupled to the programmable logic device (as modified above, p. 1192, Fig. 2), wherein the packet is coupled from the programmable logic device to a second physical interface circuit for transmission to the internal computing system (as modified above, p. 1192, Fig. 2).

Regarding claim 79, Xu discloses wherein the programmable logic device (as modified above) performs the one or more checks while the packet is being coupled from the first physical interface to the second physical interface (performed in parallel with normal cell processing, pp. 1199, §VI).

9. Claims 86-88 are rejected under 35 U.S.C. 103(a) as being unpatentable over **Xu** and **Packeteer**, as applied to claims 83 and 84 above, in further view of "BlackICE Pro User's Guide Version 2.0" by Network Ice Corporation (**NIC**).

Regarding claims 86-88, Xu discloses a system, as modified above, but lacks audio or visual feedback when the system has rejected one or more packets, when it is suspected to be under attack, or the severity of the attack. However, NIC teaches that to make users aware of attacks and spot trends and patterns of attacks, it is useful to provide a list of possible attacks on the system (p. 3, Fig. 3) and indicating the severity (p. 21). Further, when a critical or serious event occurs, the system can cause the blocking of addresses and ports/rejection of packets, and indicate this to the user (p. 21 & p. 37). Therefore, it would have been obvious to one having ordinary skill in the art at the time the invention was made to use visual indicators to indicate when the system has rejected packets and when the system is under attack and to indicate the severity of an attack. One of ordinary skill in the art would have been motivated to perform such a modification to make users aware of attacks and to spot trends, as taught by NIC.

10. Claims 89-90 are rejected under 35 U.S.C. 103(a) as being unpatentable over **Xu** and **Packeteer**, as applied to claim 84 above, in further view of U.S. Patent 6,101,540 to **Graf** and U.S. Patent 6,701,432 to Deng et al. (**Deng**).

Regarding claim 89, Xu, as modified above, teaches wherein the one or more visual or audio feedback devices provide visual or audio feedback of a state of the system performing the packet filter

process (status LED p. 41), but lacks until the one or more visual or audio feedback devices are reset by a user. However, Graf teaches that it is known for an administrator to receive alerts and to clear the alerts (col. 21, #4, #5) to allow correction. Further, Deng teaches alarms resulting from thresholds in a firewall (col. 9, lines 35-40, claim 8). Therefore, it would have been obvious to one having ordinary skill in the art at the time the invention was made to modify Xu to display alerts based on the firewall's operation, possibly based on alarm thresholds, and to enable an administrator to reset those alerts. One of ordinary skill in the art would have been motivated to perform such a modification to allow correction and continued operation, as taught by Graf and Deng.

Regarding claim 90, Xu, as modified, lacks, wherein the one or more visual or audio feedback devices are reset by the state of a physical switch. However, Packeteer teaches a power switch (p. 7) and Xu, as modified by Graf and Deng, teaches clearing alarms. Therefore, a skilled artisan, at the time the invention was made, would have found it obvious to display alarms using the visual display of Packeteer and to allow resetting of those using a physical switch, such as the power switch. One of ordinary skill in the art would have been motivated to perform such a modification to gain the benefit of displaying alerts to the user and clearing those alerts by the user, without requiring a separate computer to interface with the firewall.

11. Claim 94 is rejected under 35 U.S.C. 103(a) as being unpatentable over **Xu** and **Packeteer**, as applied to claim 93 above, in further view of "BlackICE Pro User's Guide Version 2.0" by Network Ice Corporation (**NIC**) and U.S. Patent 6,133,844 to Ahne et al. (**Ahne**).

Regarding claim 94, Xu discloses a system, as modified above, but lacks a light blinking at a rate indicative of a severity level of an attack. Packeteer teaches blinking LEDs indicating traffic activity (pp. 1 & 41). NIC teaches indicating a severity level of an attack to a user (pp. 1, 3, 21 & 37). Ahne teaches that on a printing device, an LED's blink rate can be altered and the LEDs can be used to convey the

operating status of the device (col. 7 lines 22-52 & col. 8 lines 20-37). Therefore, it would have been obvious to one having ordinary skill in the art at the time the invention was made to use the blink rate of a light, as taught by Ahne, on Xu's firewall system, as suggested by Packeteer, to indicate the severity level of an attack, as taught by NIC. One of ordinary skill in the art would have been motivated to perform such a modification to convey operating status to a user, as taught by Ahne (col. 7 lines 22-52 & col. 8 lines 20-37).

Double Patenting

12. The nonstatutory double patenting rejection is based on a judicially created doctrine grounded in public policy (a policy reflected in the statute) so as to prevent the unjustified or improper timewise extension of the "right to exclude" granted by a patent and to prevent possible harassment by multiple assignees. A nonstatutory obviousness-type double patenting rejection is appropriate where the conflicting claims are not identical, but at least one examined application claim is not patentably distinct from the reference claim(s) because the examined application claim is either anticipated by, or would have been obvious over, the reference claim(s). See, e.g., *In re Berg*, 140 F.3d 1428, 46 USPQ2d 1226 (Fed. Cir. 1998); *In re Goodman*, 11 F.3d 1046, 29 USPQ2d 2010 (Fed. Cir. 1993); *In re Longi*, 759 F.2d 887, 225 USPQ 645 (Fed. Cir. 1985); *In re Van Ornum*, 686 F.2d 937, 214 USPQ 761 (CCPA 1982); *In re Vogel*, 422 F.2d 438, 164 USPQ 619 (CCPA 1970); and *In re Thorington*, 418 F.2d 528, 163 USPQ 644 (CCPA 1969).

A timely filed terminal disclaimer in compliance with 37 CFR 1.321(c) or 1.321(d) may be used to overcome an actual or provisional rejection based on a nonstatutory double patenting ground provided the conflicting application or patent either is shown to be commonly owned with this application, or claims an invention made as a result of activities undertaken within the scope of a joint research agreement.

Effective January 1, 1994, a registered attorney or agent of record may sign a terminal disclaimer. A terminal disclaimer signed by the assignee must fully comply with 37 CFR 3.73(b).

13. Claims 67-96 are rejected on the ground of nonstatutory obviousness-type double patenting as being unpatentable over claims 2-30 of U.S. Patent No. 7,013,482. Although the conflicting claims are not identical, they are not patentably distinct from each other because (in claim 1 of the patent), removal of "wherein at least …" and "wherein the packet is selectively altered to be invalid if a determination …" is obvious for reasons of breadth.

14. Further, claims 67-96 are obvious variations over the patent claims 1-30 in view of at least Xu and Packeteer.

Allowable Subject Matter

15. Claim 68 is objected to as being dependent upon a rejected base claim, but would be allowable if rewritten in independent form including all of the limitations of the base claim and any intervening claims and the above double patenting rejection were overcome.

Conclusion

Any inquiry concerning this communication or earlier communications from the examiner should be directed to MICHAEL SIMITOSKI whose telephone number is (571)272-3841. The examiner can normally be reached on Monday - Thursday, 6:45 a.m. - 4:15 p.m..

If attempts to reach the examiner by telephone are unsuccessful, the examiner's supervisor, Edan Orgad can be reached on (571)272-7884. The fax phone number for the organization where this application or proceeding is assigned is 571-273-8300.

Information regarding the status of an application may be obtained from the Patent Application Information Retrieval (PAIR) system. Status information for published applications may be obtained from either Private PAIR or Public PAIR. Status information for unpublished applications is available through Private PAIR only. For more information about the PAIR system, see http://pair-direct.uspto.gov. Should you have questions on access to the Private PAIR system, contact the Electronic Business Center (EBC) at 866-217-9197 (toll-free). If you would like assistance from a USPTO Customer Service Representative or access to the automated information system, call 800-786-9199 (IN USA OR CANADA) or 571-272-1000.

March 2, 2012
/Michael J Simitoski/
Primary Examiner, Art Unit 2439

Notice of References Cited	Application/Control No. 12/807,641	Applicant(s)/Patent Under Reexamination KRUMEL, ANDREW K.	
	Examiner MICHAEL SIMITOSKI	Art Unit 2439	Page 1 of 1

U.S. PATENT DOCUMENTS

*		Document Number Country Code-Number-Kind Code	Date MM-YYYY	Name	Classification
*	A	US-6,795,918	09-2004	Trolan, Steven T.	713/160
*	B	US-5,805,816	09-1998	Picazo et al.	709/223
*	C	US-4,941,198	07-1990	Johnson et al.	455/9
*	D	US-6,701,432	03-2004	Deng et al.	713/153
*	E	US-6,772,347	08-2004	Xie et al.	726/11
*	F	US-6,101,540	08-2000	Graf, Lars Oliver	709/224
	G	US-			
	H	US-			
	I	US-			
	J	US-			
	K	US-			
	L	US-			
	M	US-			

FOREIGN PATENT DOCUMENTS

*		Document Number Country Code-Number-Kind Code	Date MM-YYYY	Country	Name	Classification
	N					
	O					
	P					
	Q					
	R					
	S					
	T					

NON-PATENT DOCUMENTS

*		Include as applicable: Author, Title Date, Publisher, Edition or Volume, Pertinent Pages)
	U	Xu, Jun and Mukesh Singhal. "Design and Evaluation of a High-Performance ATM Firewall Switch and Its Applications", June 1999.
	V	
	W	
	X	

*A copy of this reference is not being furnished with this Office action. (See MPEP § 707.05(a).)
Dates in MM-YYYY format are publication dates. Classifications may be US or foreign.

EAST Search History

EAST Search History (Prior Art)

Ref #	Hits	Search Query	DBs	Default Operator	Plurals	Time Stamp
S179	1	12/807641.app.	US-PGPUB; USPAT; EPO; IBM_TDB	OR	OFF	2012/03/01 15:44
S180	1	"7013482".pn.	US-PGPUB; USPAT; EPO; IBM_TDB	OR	OFF	2012/03/01 15:45
S181	21	("7013482").URPN.	USPAT	OR	OFF	2012/03/01 15:59
S182	0	@ad<"20000707" and (last near2 hostage)	US-PGPUB; USPAT; EPO; JPO; IBM_TDB	OR	ON	2012/03/02 07:26
S183	0	@ad<"20000707" and (cell adj hostage)	US-PGPUB; USPAT; EPO; JPO; IBM_TDB	OR	ON	2012/03/02 07:27
S187	9730	713/154.ccls. 726/11,12,13.ccls. 709/229.ccls.	US-PGPUB; USPAT; EPO; JPO; IBM_TDB	OR	ON	2012/03/02 07:29
S188	1571	@ad<"20000707" and S187	US-PGPUB; USPAT; EPO; JPO; IBM_TDB	OR	ON	2012/03/02 07:29
S189	0	@ad<"20000707" and S187 and ((packet cell) near4 (copy$4 copie$1)) same parallel	US-PGPUB; USPAT; EPO; JPO; IBM_TDB	OR	ON	2012/03/02 07:30
S190	204	@ad<"20000707" and ((packet cell) near4 (copy$4 copie$1)) same parallel	US-PGPUB; USPAT; EPO; JPO; IBM_TDB	OR	ON	2012/03/02 07:30
S192	111	@ad<"20000707" and ((packet cell) near4 (copy$4 copie$1)) same parallel and packet	US-PGPUB; USPAT; EPO; JPO; IBM_TDB	OR	ON	2012/03/02 07:30
S193	10	@ad<"20000707" and ((packet cell) near4 (copy$4 copie$1)) same parallel and packet and (crc)	US-PGPUB; USPAT; EPO; JPO; IBM_TDB	OR	ON	2012/03/02 07:31
S194	54	@ad<"20000707" and S187 and ((packet cell) same parallel)	US-PGPUB; USPAT; EPO; JPO; IBM_TDB	OR	ON	2012/03/02 07:34
S195	67	("6691168").URPN.	USPAT	OR	OFF	2012/03/02 07:44
S196	13	("5463777" | "5574910" | "5920886" | "5951651" | "6012061" | "6157955" | "6170012" | "6223172" | "6289013" | "6341130" | "6389532" | "6412000" | "6457051").PN.	US-PGPUB; USPAT; USOCR	OR	OFF	2012/03/02 07:45
S197	6	("4500990" | "5473607" | "5530703" | "5615340" | "5909686" | "6108713").PN.	US-PGPUB; USPAT; USOCR	OR	OFF	2012/03/02 07:45
S198	53	("6570884").URPN.	USPAT	OR	OFF	2012/03/02 07:45
S199	8	("5951651" | "5983270" | "6147976" | "6154446" | "6173364" | "6182228" | "6185680" | "6233686").PN.	US-PGPUB; USPAT; USOCR	OR	OFF	2012/03/02 07:45
S200	19	("7136926").URPN.	USPAT	OR	OFF	2012/03/02

						07:45
S201	165	S195 S196 S197 S198 S199 S200	US-PGPUB; USPAT	OR	OFF	2012/03/02 07:46
S202	53	S201 and ((packet cell) same (parallel simultaneous$3))	US-PGPUB; USPAT	OR	OFF	2012/03/02 07:46
S203	12	S201 and ((packet cell) same (parallel simultaneous$3)) and @ad<"20000707"	US-PGPUB; USPAT	OR	OFF	2012/03/02 07:47
S204	44	@ad<"20000707" and ((packet cell) near4 (final last end)) same (random$3) same (error)	US-PGPUB; USPAT; EPO; JPO; IBM_TDB	OR	ON	2012/03/02 07:50
S205	53	@ad<"20000707" and ((packet cell) near4 (final last end)) same (random$3) same (error failure)	US-PGPUB; USPAT; EPO; JPO; IBM_TDB	OR	ON	2012/03/02 07:51
S206	10	@ad<"20000707" and ((packet cell) near4 (final last end)) with (random$3) same (error failure)	US-PGPUB; USPAT; EPO; JPO; IBM_TDB	OR	ON	2012/03/02 07:51
S207	0	@ad<"20000707" and ((packet cell) near4 (final last end)) same (random$3) same (error failure) and S187	US-PGPUB; USPAT; EPO; JPO; IBM_TDB	OR	ON	2012/03/02 07:51
S208	3	@ad<"20000707" and ((packet cell) near4 (final last end)) same (random$3) same (error failure) and (713|726|709).clas.	US-PGPUB; USPAT; EPO; JPO; IBM_TDB	OR	ON	2012/03/02 07:52
S209	320	@ad<"20000707" and ((packet cell) near4 (final last end)) same (error failure) and (713|726|709).clas.	US-PGPUB; USPAT; EPO; JPO; IBM_TDB	OR	ON	2012/03/02 07:52
S210	7	@ad<"20000707" and ((packet cell) near4 (final last end)) same (error failure) same (rule filter$3 firewall) and (713|726|709).clas.	US-PGPUB; USPAT; EPO; JPO; IBM_TDB	OR	ON	2012/03/02 07:53
S211	10	@ad<"20000707" and ((packet cell) near4 (final last end)) same (error failure) same (parallel) and (713|726|709).clas.	US-PGPUB; USPAT; EPO; JPO; IBM_TDB	OR	ON	2012/03/02 07:54
S212	0	@ad<"20000707" and firewall same (pld)	US-PGPUB; USPAT; EPO; JPO; IBM_TDB	OR	ON	2012/03/02 11:04
S213	19	@ad<"20000707" and firewall same (programmable adj logic)	US-PGPUB; USPAT; EPO; JPO; IBM_TDB	OR	ON	2012/03/02 11:04
S214	41	@ad<"20000707" and firewall and (programmable adj logic adj device)	US-PGPUB; USPAT; EPO; JPO; IBM_TDB	OR	ON	2012/03/02 11:05
S215	19	@ad<"20000707" and (firewall filter).ti. and (programmable adj logic adj device)	US-PGPUB; USPAT; EPO; JPO; IBM_TDB	OR	ON	2012/03/02 11:06
S216	49	@ad<"20000707" and (firewall (packet near filter)) and (programmable adj logic adj device)	US-PGPUB; USPAT; EPO; JPO; IBM_TDB	OR	ON	2012/03/02 11:07
S218	9	@ad<"20000707" and (firewall (packet near filter)) and (programmable adj logic adj device) and (713|726).clas.	US-PGPUB; USPAT; EPO; JPO; IBM_TDB	OR	ON	2012/03/02 11:08
S219	14	(KRUMEL near2 ANDREW).in.	US-PGPUB; USPAT; EPO; JPO; IBM_TDB	OR	ON	2012/03/02 14:39
S220	68	@ad<"20000707" and ((packet adj filter) firewall) and ((alarm alert$4) same reset$4)	US-PGPUB; USPAT; EPO; JPO;	OR	ON	2012/03/02 14:43

			IBM_TDB			
S221	23	@ad<"20000707" and ((packet adj filter) firewall) and ((alarm alert$4) same reset$4) and (713|726|709).clas.	US-PGPUB; USPAT; EPO; JPO; IBM_TDB	OR	ON	2012/03/02 14:44
S222	25	@ad<"20000707" and ((log) near2 reset$4) and (713|726|709).clas.	US-PGPUB; USPAT; EPO; JPO; IBM_TDB	OR	ON	2012/03/02 14:50
S223	60	@ad<"20000707" and ((alarm) near2 reset$4) and (713|726|709).clas.	US-PGPUB; USPAT; EPO; JPO; IBM_TDB	OR	ON	2012/03/02 14:51
S224	4	@ad<"20000707" and ((alarm) near2 reset$4) and (713|726|709).clas. and (firewall (packet adj filter))	US-PGPUB; USPAT; EPO; JPO; IBM_TDB	OR	ON	2012/03/02 14:52
S225	2325	@ad<"20000707" and (led with reset$4)	US-PGPUB; USPAT; EPO; JPO; IBM_TDB	OR	ON	2012/03/02 14:52
S226	204	@ad<"20000707" and (led with (error alarm) with reset$4)	US-PGPUB; USPAT; EPO; JPO; IBM_TDB	OR	ON	2012/03/02 14:53
S227	181	@ad<"20000707" and (led! with (error alarm) with reset$4)	US-PGPUB; USPAT; EPO; JPO; IBM_TDB	OR	ON	2012/03/02 14:53
S228	13	@ad<"20000707" and (led! with (error alarm) with reset$4) and (packet)	US-PGPUB; USPAT; EPO; JPO; IBM_TDB	OR	ON	2012/03/02 14:53
S229	211	370/230,230.1.ccls. and led!	US-PGPUB; USPAT; EPO; JPO; IBM_TDB	OR	ON	2012/03/02 14:57
S230	19	370/230,230.1.ccls. and led! same (error alert$3 alarm)	US-PGPUB; USPAT; EPO; JPO; IBM_TDB	OR	ON	2012/03/02 14:58
S231	3	370/230,230.1.ccls. and led! same (error alert$3 alarm) same (reset$4)	US-PGPUB; USPAT; EPO; JPO; IBM_TDB	OR	ON	2012/03/02 15:02
S232	3	@ad<"20000707" and (led! with (error alarm) with reset$4) and (packet) and "370".clas.	US-PGPUB; USPAT; EPO; JPO; IBM_TDB	OR	ON	2012/03/02 15:06
S233	3664	@ad<"20000707" and (reset$3 near4 (alarm alert notification))	US-PGPUB; USPAT; EPO; JPO; IBM_TDB	OR	ON	2012/03/02 15:07
S234	484	@ad<"20000707" and (reset$3 near4 (alarm alert notification)) and ((alarm alert notification) with LED)	US-PGPUB; USPAT; EPO; JPO; IBM_TDB	OR	ON	2012/03/02 15:07
S235	451	@ad<"20000707" and (reset$3 near4 (alarm alert notification)) and ((alarm alert notification) with LED!)	US-PGPUB; USPAT; EPO; JPO; IBM_TDB	OR	ON	2012/03/02 15:07
S236	20	@ad<"20000707" and (reset$3 near4 (alarm alert notification)) and ((alarm alert notification) with LED!) and (713|380|709|370|726).clas.	US-PGPUB; USPAT; EPO; JPO; IBM_TDB	OR	ON	2012/03/02 15:07
S237	89	@ad<"20000707" and (reset$3 with switch$3 with (alarm alert notification)) and (713|380|709|370|726).clas.	US-PGPUB; USPAT; EPO; JPO; IBM_TDB	OR	ON	2012/03/02 15:12
S238	33	@ad<"20000707" and (reset$3 with switch$3 with (alarm alert notification)) and (713|380|709|370|726).clas. and	US-PGPUB; USPAT; EPO;	OR	ON	2012/03/02 15:13

		(packet)	JPO; IBM_TDB			
S239	257	@ad<"20000707" and (reset$3 with (alarm alert notification)) and (713|380|709|370|726).clas. and (packet)	US-PGPUB; USPAT; EPO; JPO; IBM_TDB	OR	ON	2012/03/02 15:20
S240	102	@ad<"20000707" and (reset$3 with (notification)) and (713|380|709|370|726).clas. and (packet)	US-PGPUB; USPAT; EPO; JPO; IBM_TDB	OR	ON	2012/03/02 15:20
S241	0	@ad<"20000707" and ((button keypad) with clear$3 with (notification)) and (713|380|709|370|726).clas. and (packet)	US-PGPUB; USPAT; EPO; JPO; IBM_TDB	OR	ON	2012/03/02 15:28
S242	0	@ad<"20000707" and ((button keypad) with clear$3 with (notification)) and (713|380|709|370|726).clas.	US-PGPUB; USPAT; EPO; JPO; IBM_TDB	OR	ON	2012/03/02 15:29
S243	13	@ad<"20000707" and ((button keypad) with clear$3 with (alarm alert notification)) and (713|380|709|370|726).clas.	US-PGPUB; USPAT; EPO; JPO; IBM_TDB	OR	ON	2012/03/02 15:29
S244	32	@ad<"20000707" and ((button switch keypad) with clear$3 with (alarm alert notification)) and (713|380|709|370|726).clas.	US-PGPUB; USPAT; EPO; JPO; IBM_TDB	OR	ON	2012/03/02 15:30
S245	25	@ad<"20000707" and ((switch) with clear$3 with (alarm alert notification)) and (713|380|709|370|726).clas.	US-PGPUB; USPAT; EPO; JPO; IBM_TDB	OR	ON	2012/03/02 15:30
S246	1	"20020113705".pn.	US-PGPUB; USPAT; EPO; JPO; IBM_TDB	OR	ON	2012/03/02 15:36
S247	1	"6711445".pn.	US-PGPUB; USPAT; EPO; JPO; IBM_TDB	OR	ON	2012/03/02 15:37
S248	10	@ad<"20000707" and ((firewall) (packet adj filter)) and ((alarm alert notification) near4 (clear$3 reset$3) with user) and (713|380|709|370|726).clas.	US-PGPUB; USPAT; EPO; JPO; IBM_TDB	OR	ON	2012/03/02 15:41
S249	1	@ad<"20000707" and ((alarm alert notification) near4 (clear$3 reset$3) with user) and ("726").clas.	US-PGPUB; USPAT; EPO; JPO; IBM_TDB	OR	ON	2012/03/02 15:43
S250	27	@ad<"20000707" and ((alarm alert notification) near4 (clear$3 reset$3)) and ("726").clas.	US-PGPUB; USPAT; EPO; JPO; IBM_TDB	OR	ON	2012/03/02 15:43
S251	468	@ad<"20000707" and ((alarm alert notification)) and (713/154.ccls. 726/11,12,13.ccls. 709/229.ccls.)	US-PGPUB; USPAT; EPO; JPO; IBM_TDB	OR	ON	2012/03/02 15:53
S252	21	@ad<"20000707" and ((alarm alert notification) near4 threshold) and (713/154.ccls. 726/11,12,13.ccls. 709/229.ccls.)	US-PGPUB; USPAT; EPO; JPO; IBM_TDB	OR	ON	2012/03/02 15:53
S253	1	@ad<"20000707" and ((alarm alert notification) near4 threshold) same (firewall (packet adj filter)) and (713/154.ccls. 726/11,12,13.ccls. 709/229.ccls.)	US-PGPUB; USPAT; EPO; JPO; IBM_TDB	OR	ON	2012/03/02 15:56
S254	6	@ad<"20000707" and ((alarm alert notification) near4 threshold) and (firewall (packet adj filter)) and (713/154.ccls. 726/11,12,13.ccls. 709/229.ccls.)	US-PGPUB; USPAT; EPO; JPO; IBM_TDB	OR	ON	2012/03/02 15:57
S255	6	@ad<"20000707" and ((alarm alert notification)) and (rule near4 threshold) and (firewall (packet adj filter)) and (713/154.ccls. 726/11,12,13.ccls. 709/229.ccls.)	US-PGPUB; USPAT; EPO; JPO; IBM_TDB	OR	ON	2012/03/02 15:59
S256	2	(6701432|6772347).pn.	US-PGPUB;	OR	ON	2012/03/02

			USPAT; EPO; JPO; IBM_TDB			16:01
S257	2	S256 and (reset$3 clear$3)	US-PGPUB; USPAT; EPO; JPO; IBM_TDB	OR	ON	2012/03/02 16:01
S258	257	@ad<"20000707" and (user same (alarm$3 alert$3) same (reset$4 clear$4) same log$4)	US-PGPUB; USPAT; EPO; JPO; IBM_TDB	OR	ON	2012/03/02 16:01
S259	20	@ad<"20000707" and (user same (alarm$3 alert$3) same (reset$4 clear$4) same log$4) and (713|726).clas.	US-PGPUB; USPAT; EPO; JPO; IBM_TDB	OR	ON	2012/03/02 16:01
S260	6	@ad<"20000707" and ((alarm alert notification)) near4 (clear$3 dismiss$3) and (713/154.ccls. 726/11,12,13.ccls. 709/229.ccls.)	US-PGPUB; USPAT; EPO; JPO; IBM_TDB	OR	ON	2012/03/02 16:09
S261	232	@ad<"20000707" and (hold$3 with reset$3 with (warning alarm alert))	US-PGPUB; USPAT; EPO; JPO; IBM_TDB	OR	ON	2012/03/02 16:21
S262	3	@ad<"20000707" and (hold$3 with reset$3 with (warning alarm alert)) and (packet)	US-PGPUB; USPAT; EPO; JPO; IBM_TDB	OR	ON	2012/03/02 16:21
S263	232	@ad<"20000707" and (hold$3 with reset$3 with (warning alarm alert))	US-PGPUB; USPAT; EPO; JPO; IBM_TDB	OR	ON	2012/03/02 16:22
S264	97	@ad<"20000707" and (hold$3 with reset$3 with (button switch) with (warning alarm alert))	US-PGPUB; USPAT; EPO; JPO; IBM_TDB	OR	ON	2012/03/02 16:22
S265	3	@ad<"20000707" and (hold$3 with reset$3 with (button switch) with (warning alarm alert)) and (713|709|370|726).clas.	US-PGPUB; USPAT; EPO; JPO; IBM_TDB	OR	ON	2012/03/02 16:23

EAST Search History (Interference)

<This search history is empty>

3/2/2012 4:36:13 PM
C:\Users\msimitoski\Documents\EAST\Workspaces\12\12_807641_real_time_firewall_data_protection_system_methods.wsp

Form PTO-1449 (REV. 7-92) U.S. DEPARTMENT OF COMMERCE Patent and Trademark Office

INFORMATION DISCLOSURE STATEMENT BY APPLICANT

(Use several sheets if necessary)

OPAP IAP7 APR 08 2011 PATENT & TRADEMARK OFFICE

Attorney's Docket Number	Serial No.
802-001C	12/807,641
Applicant(s): KRUMEL	
Filing Date: 9/10/10	Group Art Unit: 2134

U.S. PATENT DOCUMENTS

*EXAMINER INITIAL	DOCUMENT NUMBER	DATE	NAME	CLASS	SUBCLASS	FILING DATE IF APPROPRIATE
	5 3 4 3 4 7 1	08-1994	Cassagnol	370	401	
	5 4 2 6 3 7 8	6/20/95	Ong	326	39	
	5 4 2 6 3 7 9	06-1995	Trimberger	326	39	
	5 5 3 0 6 9 5	06-1996	Dighe	370	232	
	5 5 9 0 0 6 0	12-1996	Granville	702	155	
	5 6 5 7 3 1 6	08-1997	Nakagaki	370	394	
	5 7 4 0 3 7 5	4/14/98	Dunne et al.	395	200.68	
	5 7 4 5 2 2 9	04-1998	June	356	73	
	5 7 9 4 0 3 3	8/11/98	Aldebert et al.	395	653	
	5 8 3 5 7 2 6	11/10/98	Shwed et al.	395	200.59	
	5 8 8 4 0 2 5	3/16/99	Baehr et al.	395	187.01	
	5 9 0 3 5 6 6	05-1999	Flammer	370	406	
	5 9 0 5 8 5 9	05-1999	Holloway	713	201	
	5 9 6 8 1 7 6	10/19/99	Nessett et al.	713	201	
	5 9 7 4 5 4 7	10-1999	Klimenko	713	2	
	6 0 0 3 1 3 3	12/14/99	Moughanni et al.	713	200	
	6 0 0 9 4 7 5	12/28/99	Shrader	709	249	
	6 0 2 0 7 5 8	02-2000	Patel	326	40	
	6 0 7 6 1 6 8	06-2000	Fiveash	713	201	
	6 0 1 1 7 9 7	01-2000	Sugawara	370	395.51	
	6 0 4 9 2 2 2	4/11/00	Lawmann	326	38	
	6 0 5 2 7 8 5	04-2000	Lin	709	225	
	6 0 5 2 7 8 8	04-2000	Wesinger	713	201	

EXAMINER	DATE CONSIDERED

*EXAMINER: Initial if citation considered, whether or not citation is in conformance with MPEP § 609. Draw line through citation if not in conformance and not considered. Include copy of this form with next communication to applicant.

ALL REFERENCES CONSIDERED EXCEPT WHERE LINED THROUGH. /M.S./

Form PTO-1449 (REV. 7-92) U.S. DEPARTMENT OF COMMERCE Patent and Trademark Office

INFORMATION DISCLOSURE STATEMENT BY APPLICANT

(Use several sheets if necessary)

Attorney's Docket Number	Serial No.
802-001C	12/807,641
Applicant(s): KRUMEL	
Filing Date: 9/10/10	Group Art Unit: 2134

U.S. PATENT DOCUMENTS

*EXAMINER INITIAL	DOCUMENT NUMBER	DATE	NAME	CLASS	SUBCLASS	FILING DATE IF APPROPRIATE
	6 0 7 8 7 3 6	6/20/00	Guccione	395	500.17	
	6 0 9 2 1 0 8	07-2000	DiPlacido	709	224	
	6 0 9 2 1 2 3	07-2000	Steffan	710	8	
	6 1 3 3 8 4 4	10-2000	Ahne	340	815.45	
	6 1 3 4 6 6 2	10-2000	Levy	713	200	
	6 1 5 1 6 2 5	11-2000	Swales	709	218	
	6 1 7 5 8 3 9	01-2001	Takao	715	500	
	6 1 8 2 2 2 5	01-2001	Hagiuda	713	201	
	6 2 1 5 7 6 9	04-2001	Ghani	370	230	
	6 2 2 3 2 4 2	04-2001	Sheafor et al.	710	317	
	6 3 1 0 6 9 2	10-2001	Fan	358	1.14	
	6 3 2 6 8 0 6	12-2001	Fallside	326	38	
	6 3 3 3 7 9 0	12-2001	Kageyama	358	1.15	
	6 3 3 5 9 3 5	01-2002	Kadambi	370	396	
	6 3 4 3 3 2 0	01-2002	Fairchild	709	224	
	6 3 6 3 5 1 9	02-2002	Levi	716	16	
	6 3 7 4 3 1 8	04-2002	Hayes	710	107	
	6 3 8 9 5 4 4	05-2002	Katagiri	713	300	
	6 4 1 4 4 7 6	07-2002	Yagi	324	127	
	6 4 3 0 7 1 1	08-2002	Sekizawa	714	47	
	6 5 4 9 9 4 7	04-2003	Suzuki	709	229	
	6 6 0 8 8 1 6	03-2003	Nichols	370	235	
	6 6 2 8 6 5 3	09-2003	Salim	370	389	

EXAMINER	DATE CONSIDERED

*EXAMINER: Initial if citation considered, whether or not citation is in conformance with MPEP § 609. Draw line through citation if not in conformance and not considered. Include copy of this form with next communication to applicant.

ALL REFERENCES CONSIDERED EXCEPT WHERE LINED THROUGH. /M.S./

Form PTO-1449 (REV. 7-92)	U.S. DEPARTMENT OF COMMERCE Patent and Trademark Office	Attorney's Docket Number	Serial No.
INFORMATION DISCLOSURE STATEMENT BY APPLICANT (Use several sheets if necessary)		B02-001C	12/807,641
		Applicant(s): KRZYMIEL	
		Filing Date: 9/10/10	Group Art Unit: 2134

	6	6	4	0	3	3	4	10-2003	Rasmussen	717	171	

U.S. PATENT DOCUMENTS

*EXAMINER INITIAL	DOCUMENT NUMBER							DATE	NAME	CLASS	SUBCLASS	FILING DATE IF APPROPRIATE
	6	6	9	1	1	6	8	02-2004	Bal	709	238	
	6	7	0	0	8	9	1	03-2004	Wong			
	6	7	3	4	9	8	5	05-2004	Ochiai	358	1.15	
	6	7	7	1	6	4	6	08-2004	Sarkissian	370	392	
	6	7	7	9	0	0	4	08-2004	Zintel	709	227	
	6	7	9	1	9	9	2	09-2004	Yun	370	415	

FOREIGN PATENT DOCUMENTS

	DOCUMENT NUMBER							DATE	COUNTRY	CLASS	SUBCLASS	TRANSLATION	
	WO	96/	3	4	4	7	9	10/31/96	PCT			YES	NO
	WO	99/	4	8	3	0	3	9/23/99	PCT				
	WO	00/	0	2	1	1	4	1/13/00	PCT				

OTHER DOCUMENTS (Including Author, Title, Date, Pertinent Pages, Etc.)

		"Baseband Specification Part B", Bluetooth Spec. v. 1.1, Edited by Henrik Hedlund in conjunction with Bluetooth.org, Feb. 2001, Available from Internet: http://www.bluetooth.com/developer/specification/core.asp, pp. 41-46.
		Comer, Douglas, "Internetworking with TCP/IP. Vol. 1: Principles, Protocols, and Architectures", 4th Edition, New Jersey: Prentice Hall, 2000, Ch. 7, pp. 95-113, Ch. 12, pp. 197-206.
		Feit. Dr. Sidnie, "Architecture, Protocols, and Implementation with IPv6 and IP Security," TCP/IP Signature Edition, San Francisco: McGraw-Hill, Ch. 9: pp. 274-282, Ch. 11: pp. 432-457, 1999.
		"Host Controller Interface Functional Specification, Part H:1" Edited by Christian Johansson in conjunction with Bluetooth.org., Feb. 2001, Available from Internet: **http://www.bluetooth.com/developer/specification/core.asp**, pp. 543-550.
		"Jini Architecture Specifications." Version 1.1, Sun Microsystems, Inc., October 2000. Available from Internet: http://www.sun.com/jini/specs/jini1_1.pdf, pp. 1-20.
		"Jini Device Architecture Specifications." Version 1.1, Sun Microsystems, Inc., October 2000. Available from

EXAMINER	DATE CONSIDERED

*EXAMINER: Initial if citation considered, whether or not citation is in conformance with MPEP § 609. Draw line through citation if not in conformance and not considered. Include copy of this form with next communication to applicant.

ALL REFERENCES CONSIDERED EXCEPT WHERE LINED THROUGH. /M.S./

Form PTO-1449 (REV. 7-92)	U.S. DEPARTMENT OF COMMERCE Patent and Trademark Office	Attorney's Docket Number	Serial No.
INFORMATION DISCLOSURE STATEMENT BY APPLICANT (Use several sheets if necessary)		802-001C	12/807,641
		Applicant(s): KRUMEL	
		Filing Date: 9/10/10	Group Art Unit: 2134

		Internet: **http://www.sun.com/jini/specs/devicearch1_1.pdf**, pp. 1-14.
OTHER DOCUMENTS (Including Author, Title, Date, Pertinent Pages, Etc.)		
		"Logical Link Control and Adaptation Protocol Specification." Part D, Edited by Jon Inouye in conjunction with Bluetooth.org., Feb. 2001, Available from Internet: **http://www.bluetooth.com/developer/specification/core.asp**, pp. 257-260.
		Sollins, K., "The TFTP Protocol (Revision 2.0)", MIT, July 1992. Available from Internet: **http://www.cis.ohio-state.edu/cgi-bin/rfc/rfc1350.html**, pp. 1-10.
		Tanenbaum, Andrew S., "Computer Networks", 3rd Edition, Vrije Universiteit, Amsterdam, The Netherlands, pub. New Jersey: Prentice Hall, 1996, 28-44.
		Wilder, Floyd, "A Guide to the TCP/IP Protocol Suite", 2nd Edition, Boston: Artech House, 1998, Ch. 3, pp. 123-162.
		3Com, "SuperStack 3 Firewall" 2000 3Com
		Hughes, James "A High Speed Firewall Architecture for ATM/OC-3c" Feb. 1996
		IBM Technical Disclosure Bulletins NN8606320 (1986), NN950431 (1995), NA81123528 (1981), NN9704141 (1997), NN9512419 (1995), NN9502341 (1995), NN9308183 (1993), NN8606254 (1986), NN83102393 (1983)
		Lakshman, T.V. "High Speed Policy-Based Packet Forwarding Using Efficient Multi-Dimensional Range Matching" 1998 ACM, pp 203-214
		Network ICE Corp., "Black ICE Pro User's Guide Version 2.0" June 2000 (archive.org)
		Packeteer, Inc., "PacketShaper 4000 Getting Started Version 4.0" March 1999
		Symantec, Inc. "Norton Personal Firewall 2000 User's Guide Version 2.0" June 2000 (archive.org)
		Xu, Jun and Mukesh Singhal "Design of a High-Performance ATM Firewall" 1999 ACM
		Xu, Jun and Mukesh Singhal, "Design of a High-Performance ATM Firewall" 1998 ACM pp 93-102
		AARNet, "ATM", <http://www.aarnet.edu.au/engineering/networkdesign/mtu/atm.html> date not provided
		Derfler, Jr., Frank J. et al. "How Networks Work" Sept. 2000, pp 162-167
		Newton, Harry, "Newton's TELECOM Dictionary" 2003 CMP Books, pp. 78-79
		Unknown, "ATM Efficiency" <http://homepages.uel.ac.uk/u0227461/Website/efficiency.htm> date not provided

EXAMINER	DATE CONSIDERED
*EXAMINER: Initial if citation considered, whether or not citation is in conformance with MPEP § 609. Draw line through citation if not in conformance and not considered. Include copy of this form with next communication to applicant.	

ALL REFERENCES CONSIDERED EXCEPT WHERE LINED THROUGH. /M.S./

Form PTO-1449 (REV. 7-92) U.S. DEPARTMENT OF COMMERCE Patent and Trademark Office

INFORMATION DISCLOSURE STATEMENT BY APPLICANT

(Use several sheets if necessary)

Attorney's Docket Number	Serial No.
802-001C	12/807,641
Applicant(s): KRUMEL	
Filing Date: 9/10/10	Group Art Unit: 2134

U.S. PATENT DOCUMENTS

*EXAMINER INITIAL	DOCUMENT NUMBER	DATE	NAME	CLASS	SUBCLASS	FILING DATE IF APPROPRIATE
	6 3 2 1 3 3 8	11-2001	Porras et al.	726	25	
	6 2 2 2 5 4 7	04-2001	Schwuttke et al.	345	419	
	6 1 0 8 7 8 6	08-2000	Knowlson, Kenneth L.	726	11	
	6 2 4 3 8 1 5	06-2001	Antur et al.	726	11	
	6 2 8 9 0 1 3	09-2001	Lakshman et al.	370	389	
	6 2 1 9 7 0 6	04-2001	Fan et al.	709	225	
	6 9 9 0 5 9 1	01-2006	Pearson, Sterling Michael	726	22	
	2001/0039579	11-2001	Trcka et al.	709	224	

FOREIGN PATENT DOCUMENTS

	DOCUMENT NUMBER	DATE	COUNTRY	CLASS	SUBCLASS	TRANSLATION YES	TRANSLATION NO
	JP 09117448 A	05-1997	Japan			YES	NO

OTHER DOCUMENTS (Including Author, Title, Date, Pertinent Pages, Etc.)

		OfficeConnect Internet Firewall User Guide, 3Com, February 2000, pages 1-178.
		Mogul, Jeffrey C., "Simple and Flexible Datagram Access Controls for Unix-based Gateways", March 1989.
		Biodata GmbH, "BIGfire + User Manual", V0306+, 1999.
		Excerpts from File History of related US Patent Application No. 09/611,775 (Attorney Docket No. 802-001)
		Excerpts from File History of related US Patent Application No. 11/374,465 (Attorney Docket No. 802-001B)
		Excerpts from File History of related US Patent Application No. 09/745,599 (Attorney Docket No. 802-002)
		Excerpts from File History of related US Patent Application No. 12/316,129 (Attorney Docket No. 802-002B) ABANDONED
		Excerpts from File History of related US Patent Application No. 09/746,519 (Attorney Docket No. 802-003)
		Excerpts from File History of related US Patent Application No. 11/405,299 (Attorney Docket No. 802-003B)
		Excerpts from File History of related US Patent Application No. 09/746,107 (Attorney Docket No. 802-004)

EXAMINER /Michael Simitoski/	DATE CONSIDERED 03/02/2012

*EXAMINER: Initial if citation considered, whether or not citation is in conformance with MPEP § 609. Draw line through citation if not in conformance and not considered. Include copy of this form with next communication to applicant.

ALL REFERENCES CONSIDERED EXCEPT WHERE LINED THROUGH. /M.S./

Search Notes	Application/Control No.	Applicant(s)/Patent Under Reexamination
	12807641	KRUMEL, ANDREW K.
	Examiner	Art Unit
	MICHAEL SIMITOSKI	2439

SEARCHED			
Class	Subclass	Date	Examiner
713	154	3/2/2012	MJS
709	229	3/2/2012	MJS
726	11,12,13	3/2/2012	MJS

SEARCH NOTES		
Search Notes	Date	Examiner
See attached EAST search notes for details and text queries	3/2/2012	MJS
NPL search (attached)	3/2/2012	MJS
Inventor search performed	3/2/2012	MJS

INTERFERENCE SEARCH			
Class	Subclass	Date	Examiner

	/MICHAEL SIMITOSKI/ Primary Examiner.Art Unit 2439

+You Search Images Videos Maps News Shopping Gmail More Sign in

Google scholar "last cell hostage" Search Advanced Scholar Search

My Citations

Search only in Engineering, Computer Science, and Mathematics.
Search in all subject areas.

Scholar Articles and patents - 2000 include citations Create email alert Results **1** - **6** of **6**. (**0.05** sec)

Design and evaluation of a high-performance atm firewall switch and its applications [PDF] from snu.ac.kr
J Xu... - ... Areas in Communications, IEEE Journal on, 1999 - ieeexplore.ieee.org
... The firewall switch employs the concept of "**last cell hostage**" (LCH) to avoid or reduce the latency caused by filtering. **...** We use a scheme called **last cell hostage** (LCH) [18] in our firewall switch to reduce the latency incurred by packet filtering. **...**
Cited by 17 - Related articles - BL Direct - All 16 versions

Design of a high-performance ATM firewall [PDF] from cparity.com
J Xu... - ACM Transactions on Information and System Security ..., 1999 - dl.acm.org
... scalable and cost-effective than CAM. In addition, we introduce a novel scheme, called "**Last Cell Hostage**" (LCH), into our ATM firewall to further reduce the latency incurred by packet filtering. When a packet is fragmented, filtering **...**
Cited by 17 - Related articles - All 24 versions

A full bandwidth ATM Firewall [PDF] from pg.ua
O Paul, M Laurent... - Computer Security-ESORICS 2000, 2000 - Springer
... Class C is associated with packet filtering. IP and transport packet headers are reassembled from the ATM cells and analysed. During this analysis the last cell belonging to the packet called LCH (**Last Cell Hostage**) is kept in memory by the switch. **...**
Cited by 26 - Related articles - BL Direct - All 11 versions

An Alternative Access Control Architecture for IP over ATM Networks [PDF] from int-evry.fr
O Paul... - Communications and Multimedia Security, 1999 - books.google.com
... Class C is associated with packet filtering. IP and transport packet headers are reassembled from the ATM cells and analysed. During this analysis the last cell belonging to the packet called LCH (**Last Cell Hostage**) is kept in memory by the switch. **...**
Cited by 1 - Related articles - All 7 versions

An asynchronous distributed access control architecture for IP over ATM networks [PDF] from 69.5.23.201
O Paul, M Laurent... - ... Conference, 1999.(ACSAC' ..., 1999 - ieeexplore.ieee.org
... Class C is associated with packet filtering. IP and transport packet headers are reassembled from the ATM cells and analysed. During this analysis the last cell belonging to the packet called LCH (**Last Cell Hostage**) is kept in memory by the switch. **...**
Related articles - All 14 versions

Security mechanisms in high-speed networks
M Singhal - Computer Communications and Networks, 2000. .. , 2000 - ieeexplore.ieee.org
... The firewall switch employs "**Last Cell Hostage**" (LCH) to avoid or reduce the latency caused by filtering. We analyze in detail the performance of the firewall switch in terms of the throughput and latency. 0-7803-6494-5/00/$10.00 0 2000 IEEE 482 Page 2. Session 25 **...**

Create email alert

"last cell hostage" Search

About Google Scholar - All About Google - My Citations

©2012 Google

Ex.1002
CISCO SYSTEMS, INC. / Page 100 of 256

+You Search Images Videos Maps News Shopping Gmail More ▾ Sign in

Google scholar packet filter corrupt tail Search Advanced Scholar Search

My Citations

Search only in Engineering, Computer Science, and Mathematics.
Search in all subject areas.

Scholar Articles and patents - 2000 include citations Create email alert Results **1 - 30** of about **70**. (**0.27** sec)

BPF+: Exploiting global data-flow optimization in a generalized **packet filter** architecture [PS] from microsoft.com
A Begel, S McCanne... - ACM SIGCOMM Computer ..., 1999 - dl.acm.org
... However, in the domain of **packet filter** compilation, BPF+'s naive code generator produces decision trees with many redundant predicates, thereby making this optimization one of the most useful that can be **...** The next four sections describe our optimizations in more de- **tail**. **...**
Cited by 129 - Related articles - BL Direct - All 113 versions

Measuring link bandwidths using a deterministic model of **packet** delay [PDF] from sigcomm.org
K Lai... - ACM SIGCOMM Computer Communication Review, 2000 - dl.acm.org
... round-trip delays means that there is twice the possibility that queueing could **corrupt** a sample when compared to a technique that **...** that the deadline sometimes cannot be met, so we want to deter- mine when the deadline is to **filter** out those **...** We want **packet** k to queue at link le: **...**
Cited by 491 - Related articles - BL Direct - All 57 versions

When the CRC and TCP checksum disagree [PDF] from sigcomm.org
J Stone... - ACM SIGCOMM Computer Communication ..., 2000 - dl.acm.org
... The capture program uses the Berkeley **Packet Filter** (BPF)[7], via the libpcap library, to watch all **...** Tedious manual examination of thousands of pretty-printer **packet** dumps uncovered a num- ber of error **...** first bad byte occurs (toward the head, in the middle, or at the **tail**) and on **...**
Cited by 151 - Related articles - BL Direct - All 33 versions

Kernel Support For Network Protocol Servers
FRJ Heller... - The Second USENIX Mach Symposium ..., 1991 - usenix.org
... This improves the robustness of the system by preventing **corrupt** packets from tying up **... Tail Tail** 1 —x_pd Mutex -* Mutex Enabled 1 NULL Enabled NULL 154 Mach Symposium **...** Forin Richard Rashid, Us- enix Conference Proceedings, Summer 1990 [2] "The **Packet Filter**: An Effi
All 2 versions

Packet dropping policies for ATM and IP networks [PDF] from psu.edu
MA Labrador... - Communications Surveys & ..., 1999 - ieeexplore.ieee.org
... These include drop **tail** (DT), partial **packet** discard (PPD), early **packet** discard (EPD), selective drop (SD), EPD with fair buffer **...** and consequently to decrease the applica tion mlr by not transmitting those cells (also called **corrupt** cells) belonging to a **packet** that has **...**
Cited by 80 - Related articles - All 9 versions

[PDF] Chameleon--A system for Adaptive QoS Provisioning [PDF] from cmu.edu
RK Balan - Master's Thesis, School of Computing, NUS, 2000 - cs.cmu.edu
... 5.7.1 Random Single **Packet** Errors.....71 5.7.2 Burst Errors.....72 **...** FIGURE 18 : THROUGHPUT OF CHAMELEON VERSUS PERCENTAGE **PACKET** LOSS FOR SHORT **...**
Cited by 3 - Related articles - View as HTML - All 5 versions

Eyetap technology for wireless electronic news gathering
S Mann, J Fung... - ACM SIGMOBILE Mobile Computing and ..., 1999 - dl.acm.org
... that downsampling across rows or down columns of an image should be preceeded by lowpass **filtering**, whereas temporal **...** Most notably, pictures are typically sent over a **packet**-based communications channel. **...** Accordingly, packets typically either arrive intact or are **corrupt**. **...**
Cited by 7 - Related articles

Spatio-temporal processing of coherent acoustic communication data in shallow water
LR LeBlanc... - Oceanic Engineering, IEEE ..., 2000 - ieeexplore.ieee.org
... Toward the end of the **packet**, the beamformer does not show any privileged direction of greatest **...** beamformer using eight staves of eight channels, followed by a RLS time-domain **filter** (30 taps). **...** This will **corrupt** the direct path reception due to the limited angular resolution of the **...**
Cited by 19 - Related articles - BL Direct - All 5 versions

Challenges in the design of frequency synthesizers for wireless applications [PDF] from ucla.edu
B Razavi - ... Circuits Conference, 1997., Proceedings of the ..., 1997 - ieeexplore.ieee.org
... charge **packet** generated by the charge pump and injecting an equal and opposite **packet** so as **...** only memory (ROM), a digital-to-analog converter (DAC), and a low-pass **filter** [2]. The **...** and supply noise produced by the accumulator and the ROM may significantly **corrupt** the VCO **...**
Cited by 102 - Related articles - BL Direct - All 3 versions

MPEG4 compressed video over the Internet [PDF] from poly.edu
D Wu, YT Hou, W Zhu, YQ Zhang... - Circuits and Systems, ..., 1999 - ieeexplore.ieee.org

Ex.1002
CISCO SYSTEMS, INC. / Page 101 of 256

... To make things worse, loss of one fragment **packet** will **corrupt** other fragment packets within the ... packets are first un-packed at UDP/IP layer, then dispatched by **Filter** & Dispatcher to ... **Packet** Processing Delay 4 pi Buffer Management **Tail** Dropping End System Speed 10 Mbps to ...
Cited by 14 - Related articles - BL Direct - All 10 versions

Transport issues of real-time MPEG-2 video streams over IP network [PDF] from ubc.ca
LN Cai - 1999 - circle.ubc.ca
... video, it is necessary to develop an IP network where the competing traffic load and other network parameters are controllable. Considering the "**tail** drop" **packet** discard strategy implemented in majority of the current IP backbone routers, it is our view that after ...
Cited by 1 - Related articles - Library Search - All 3 versions

Recent advances in RF integrated circuits [PDF] from 140.113.39.126
B Razavi - Communications Magazine, IEEE, 1997 - ieeexplore.ieee.org
... MHz, then, similar to the case of homodyne downconversion, self-mixing would **corrupt** the baseband ... Requiring no image-reject **filtering** due to the zero IF, the receiver allows direct cascading ... third-order distortion, whereas a differential pair biased at a con- stant **tail** current does ...
Cited by 22 - Related articles - BL Direct - All 8 versions

Annual Report on Radar Image Enhancement, Feature Extraction and Motion Compensation Using Joint Time-Frequency Techniques [PDF] from dtic.mil
L Hao - 2000 - DTIC Document
... 2(a). Such effect is difficult to predict accurately using simulation [2, 3]. Furthermore, JEM lines are noise-like and can **corrupt** the geometrical ... 9. H. Deng and H. Ling, "Clutter reduction for synthetic aperture radar imagery based on adaptive wavelet **packet** transform," Progress in ...
Related articles - Library Search - All 3 versions

[PDF] A Condensed Review of Spread Spectrum Techniques for ISM Band Systems [PDF] from qsl.net
B Pearson - PRISM - qsl.net
... Given that the channel will **corrupt** the signal by superimposing additive white Gaussian noise (AWGN) on it, the receiver ... FIGURE 7. COMPOSITION OF AN IEEE STD 802.11 **PACKET** ... after Ronald H. Barker who first used them as frame sync markers in a matched **filter** that used ...
Cited by 1 - Related articles - View as HTML - All 5 versions

The impact of the ATM concept on video coding
W Verbiest, L Pinnoo ... - Selected Areas in ..., 1988 - ieeexplore.ieee.org
... PACKETIZATION DEFECTS In ATM networks, multiple packetization defects occur due to the **packet** nature of the ... De- pending on the synchronization scheme used, a cell loss may thus **corrupt** a large part of ... can be repeated on the low-pass band to form an octave **filter** structure ...
Cited by 159 - Related articles - All 5 versions

[PDF] Security in Collaborative **Filtering** Systems [PDF] from psu.edu
BN Chun - 1998 - Citeseer
... The mechanisms to deal with **corrupt** employees will also apply to dealing with social engineering attacks, attacks where ... Security in Collaborative **Filtering** Systems 9 ... services (eg via inetd, restrict network access to services to authorized clients (eg via a **packet** ltering gateway ...
Cited by 1 - Related articles - View as HTML - All 5 versions

Blind equalization of phase aberrations in coherent imaging: medical ultrasound and SAR
SD Silverstein - Statistical Signal and Array Processing, 2000. ... , 2000 - ieeexplore.ieee.org
... **tail** for ultrasound to blindly estimate and correct for the SAR phase aberrations. ... q=2 Step 4. Construct estimate of corrected data - Go back to the original **corrupt** data set and strip off ... Take FFT, low pass **filter** by using the first kc values setting the rest of the transform coefficients ...
Related articles - All 2 versions

[PDF] Simulation-Based Comparisons of some TCP Implementations [PDF] from leeds.ac.uk
D Xie - 2000 - comp.leeds.ac.uk
... If it is set too long, the performance will **corrupt** whenever a segment was lost which leads ... RED calculates the average queue size by using a low-pass **filter** with an exponential weighted ... Whenever a **packet** arrives at the queue, RED will compare the average queue size with a ...
Related articles - View as HTML

[HTML] Ongoing TCP research related to satellites [HTML] from hip.at
M Allman, S Dawkins, D Glover, J Griner, D Tran... - RFC2760, 2000 - hjp.at
... BPK98] also investigated unlimited byte counting in conjunction with various ACK **filtering** algorithms (discussed in ... with an "ECN- Capable Transport" bit set in the IP header of each **packet**. ... for the node detecting the corruption to return information about the **corrupt packet** to the ...
Cited by 285 - Related articles - Cached - All 2 versions

DRAFT: Task System and Item Architecture (TSIA) [PDF] from arxiv.org
BD Burow - Arxiv preprint cs/9905002, 1999 - arxiv.org
... to be confused with the thread as known in this thesis and elsewhere in computing) [Cilk-NOW][Coarse Grain Dataflow], the regular Mentat object [Mentat], the upcall [RTU][SUMO], the **filter** predicate [**Packet Filter**], the event [168/E][Funnel], the soft-instruction and others [SISA]. ...
Cited by 3 - Related articles - Library Search - All 14 versions

Ex.1002
CISCO SYSTEMS, INC. / Page 102 of 256

Reconstruction of signals using redundant channels
PH Sutterlin, HW Johnson, CC Lee ... - US Patent 5,355,114, 1994 - Google Patents
... LINE 7 41 42 FILTERS 18 43 Page 4. •44 42 -i-4 HP **FILTER** I 47 POS. EV. NEG. EV. L 53 WINDOW COMP. -48 CLK US/EUR. I 45 LP NOTCH **FILTER** rH POS, EV. V 50 <-H NEG. EV. WIN DOW COMP. ■51 54 V 60 S SNUB ENABLE ...
Cited by 136 - Related articles - All 2 versions

Method and apparatus for diversity reception of user messages with different forward error correction
D Fauconnier - EP Patent 0,999,669, 2000 - freepatentsonline.com
... Any disturbance may **corrupt** data but the corrupted data will be spread trough a plurality of bytes, frames or blocks ... The bit length of the puncturing **packet** can be expressed as L = rn. ... in an upconverter 66 which is then amplified in an amplifier 67, filtered in band pass **filter** 68 to ...
Cited by 2 - Related articles - Cached

A progressively reliable transport protocol for interactive wireless multimedia [PDF] from colorado.edu
R Han, D Messerschmitt - Multimedia Systems, 1999 - Springer
... These interstitial spaces ap- pear because, for any finite burst of packets corresponding to a fragmented image, the **tail** end of the ... Ju- dicious application of high-redundancy FEC on the header only, combined with tolerance of **corrupt packet** payloads, enables packets to be ...
Cited by 24 - Related articles - BL Direct - All 11 versions

[PDF] Scalable TCP congestion control [PDF] from lesniewski.org
RT Morris - 1999 - lesniewski.org
... The network usually delivers the **packet**, but may instead discard it, **corrupt** it, or deliver it to the wrong host. ... RED computes the average queue length qavg from the instantaneous queue length q each time a **packet** arrives with this **filter** : qavg = (1 - wq)qavg + wqq ...
Cited by 35 - Related articles - View as HTML - All 25 versions

Adaptive carrier detection
HW Johnson, CC Lee... - US Patent 5,260,974, 1993 - Google Patents
... 11 Claims, 13 Drawing Sheets 42 _L CLK FROM f" CELL~1 _ US/EUR.- ,47 ,•44 HP **FILTER** H POS. EV. -53 NEG. EV. WINDOW CO MP. r45 LP NOTCH **FILTER** POS. EV. ^48 /■50 -SNUBTRY «4 57 NEG. EV. WINDOW COMP. ...
Cited by 33 - Related articles - All 2 versions

Point-to-point interconnect communications utility
AG Nowatzyk... - US Patent 6,081,844, 2000 - Google Patents
... data transfer cases. The logic of the interconnect controller provides for adaptive routing and to topology independence and allows for the sharing of a common clock for synchro- nizing the **packet** transmission. 33 Claims, 18 ...
Cited by 20 - Related articles - All 2 versions

Voice gateway with downstream voice synchronization
TF Rabenko, D Hartman... - US Patent App. 20,010/..., 2000 - freepatentsonline.com
... the sample tracker upsamples the data if the **packet** arrival count exceeds the **packet** completion count and downsamples the data if the **packet** completion count exceeds the **packet** arrival count. 14. The synchronization circuit of claim 12 further comprising a **filter** between the ...
Cached

[PDF] Scalable compression and transmission of internet multicast video [PDF] from berkeley.edu
SR McCanne - 1996 - eecs.berkeley.edu
... 13 2 Related Work 14 2.1 **Packet** Video Transmission: An Overview . . . . . 14 2.1.1 Circuit-switched Networks . . . . . 15 2.1.2 **Packet**-switched Networks . . . .
Cited by 206 - Related articles - View as HTML - Library Search - All 19 versions

Error control coding handbook [PDF] from dtic.mil
JP Odenwalder - 1976 - DTIC Document
... QUD SM~z'.. _____RE-PORT) PHA SE LOCKED M~ 5 zLOOP REF MUJLTIPLIEU - +2 **FILTER**/ - -AMP QUAD **FILTER**/ A A ELECTEr 70MHz P7Mz Tx OUTPUT it W, /A COM LINKABIT, INC. j~t 1 'll 3033 Sc~erc, -c. Son D~efo. CA ,2,12! 61Q,1457 2312 WU kJ FILL y 8 9o 16a ...
Cited by 61 - Related articles - Library Search - All 2 versions

Apparatus and method for controlling point-to-point interconnect communications between nodes
AG Nowatzyk... - US Patent 5,754,789, 1998 - Google Patents
... The logic of the interconnect controller provides for adaptive routing and to topology independence and allows for the sharing of a common clock for synchro- nizing the **packet** transmission. ... 63 0 15 T T 15 15 15 **PACKET** BUFFER REGISTER FILE FIG. 8(a) Page 10. ...
Cited by 47 - Related articles - All 2 versions

Create email alert

Ex.1002
CISCO SYSTEMS, INC. / Page 103 of 256

packet filter corrupt tail Search

About Google Scholar - All About Google - My Citations

©2012 Google

+You Search Images Videos Maps News Shopping Gmail More ▾ Sign in

Google scholar parallel packet filter corrupt tail Search Advanced Scholar Search

My Citations

Search only in Engineering, Computer Science, and Mathematics.
Search in all subject areas.

Scholar Articles and patents - 2000 include citations Create email alert Results **1 - 30** of about **41**. (**0.22** sec)

Measuring link bandwidths using a deterministic model of **packet** delay [PDF] from sigcomm.org
K Lai... - ACM SIGCOMM Computer Communication Review, 2000 - dl.acm.org
... are usually composed of two 64Kb/s channels in **parallel**. **...** may be scheduling variations in the source host's operating system such that the deadline sometimes cannot be met, so we want to deter- mine when the deadline is to **filter** out those **...** We want **packet** k to queue at link le: **...**
Cited by 491 - Related articles - BL Direct - All 57 versions

Kernel Support For Network Protocol Servers
FRJ Heller... - The Second USENIX Mach Symposium ..., 1991 - usenix.org
... The first level of **packet filtering** could be evicted from the ker- nel but it would, without **...** are almost always synchronous even though the mechanisms are in place for asynchronous, **parallel** operation. **...** After on out-bound **packet** is queued on an OUT queue the device is started via **...**
All 2 versions

Challenges in the design of frequency synthesizers for wireless applications [PDF] from ucla.edu
B Razavi - ... Circuits Conference, 1997., Proceedings of the ..., 1997 - ieeexplore.ieee.org
... charge **packet** generated by the charge pump and injecting an equal and opposite **packet** so as to **...** only memory (ROM), a digital-to-analog converter (DAC), and a low-pass **filter** [2]. The **...** This is because the equivalent **parallel** resistance of an inductor can be expressed as Rp M **...**
Cited by 102 - Related articles - BL Direct - All 3 versions

Spatio-temporal processing of coherent acoustic communication data in shallow water
LR LeBlanc... - Oceanic Engineering, IEEE ..., 2000 - ieeexplore.ieee.org
... Two **parallel** RLS space-time filters process the signals measured at each channel. **...** Toward the end of the **packet**, the beamformer does not show any privileged direction of greatest **...** beamformer using eight staves of eight channels, followed by a RLS time-domain **filter** (30 taps). **...**
Cited by 19 - Related articles - BL Direct - All 5 versions

Transport issues of real-time MPEG-2 video streams over IP network [PDF] from ubc.ca
LN Cai - 1999 - circle.ubc.ca
... video, it is necessary to develop an IP network where the competing traffic load and other network parameters are controllable. Considering the "**tail** drop" **packet** discard strategy implemented in majority of the current IP backbone routers, it is our view that after **...**
Cited by 1 - Related articles - Library Search - All 3 versions

Apparatus and method for controlling point-to-point interconnect communications between nodes
AG Nowatzyk... - US Patent 5,754,789, 1998 - Google Patents
... The interconnect controller provides four (4) serial ports and two (2) **parallel** ports for communicating with adjacent nodes in a network. **...** for adaptive routing and to topology independence and allows for the sharing of a common clock for synchro- nizing the **packet ...**
Cited by 47 - Related articles - All 2 versions

[HTML] Ongoing TCP research related to satellites [HTML] from hjp.at
M Allman, S Dawkins, D Glover, J Griner, D Tran... - RFC2760, 2000 - hjp.at
... [BPK97,BPK98] also investigated unlimited byte counting in conjunction with various ACK **filtering** algorithms (discussed **...** throughput will still suffer in the face of non-congestion related **packet** loss. **...** in the face of dropped segments is reduced when using N **parallel** connections. **...**
Cited by 285 - Related articles - Cached - All 2 versions

Voice gateway with downstream voice synchronization
TF Rabenko, D Hartman, ... - US Patent App. 20,010/ ..., 2000 - freepatentsonline.com
... The downstream demodulator outputs MPEG-2 serial or **parallel** data, **packet** sync and a **...** The timing recovery loop 206 may include a timing error discriminant, a loop **filter**, and a digital timing recovery block which controls the digital re-sampler The carrier frequency/phase **...**
Cached

Point-to-point interconnect communications utility
AG Nowatzyk... - US Patent 6,081,844, 2000 - Google Patents
... received **packet**. The common buffer pool is segmented into sixteen (16) bit segments so that received packets may begin retransmission before com- pleting arrival. This also eliminates extra registers which otherwise would be required to convert to an 80-bit **parallel** interface. **...**
Cited by 20 - Related articles - All 2 versions

System Performance Modeling and Analysis of a Fault-Tolerant, Real Time **Parallel** Processor [PDF] from dtic.mil
RJ Clasen - 1993 - DTIC Document

Ex.1002
CISCO SYSTEMS, INC. / Page 105 of 256

... consequential as hardware failures. The Fault-Tolerant **Parallel** Processor (FTPP) was developed by Draper Laboratory as a fault-tolerant, real-time computing platform. ... 3 7 3.2.2.1 Message and **Packet** Structure ..... 38 ...
Related articles - Library Search - All 3 versions

DRAFT: Task System and Item Architecture (TSIA) [PDF] from arxiv.org
BD Burow - Arxiv preprint cs/9905002, 1999 - arxiv.org
... For exam- ple, **parallel** execution currently often is achieved by including message passing communi- cation or shared memory synchronization ... NOW][Coarse Grain Dataflow], the regular Mentat object [Mentat], the upcall [RTU][SUMO], the **filter** predicate [**Packet Filter**], the event ...
Cited by 3 - Related articles - Library Search - All 14 versions

Method and apparatus for diversity reception of user messages with different forward error correction
D Fauconnier - EP Patent 0,999,669, 2000 - freepatentsonline.com
... For instance, it is known from US-4,953,197 to use two receiving antennae in **parallel** and quality data and parity ... The bit length of the puncturing **packet** can be expressed as L = rn. ... in an upconverter 66 which is then amplified in an amplifier 67, filtered in band pass **filter** 68 to ...
Cited by 2 - Related articles - Cached

[BOOK] PARNASS: Porting Gigabit-LAN components to a workstation cluster [PDF] from uni-bonn.de
M Griebel... - 1997 - wissrech.ins.uni-bonn.de
... Each **packet** can be sent as unordered or ordered, reliable (with acknowledge) or non-reliable **packet**. ... bandwidth of 5.76 Gbit/s, see figure 5. There are several programming models for **parallel** computing available ... PCI bus are done in full 32 bits, there is no way to **filter** the right ...
Cited by 5 - Related articles - View as HTML - Library Search - All 13 versions

[PDF] Internet Engineering Task Force Mark Allman, Editor INTERNET DRAFT Spencer Dawkins File: draft-ietf-tcpsat-res-issues-05. txt Dan Glover Jim Griner [PDF] from levkowetz.com
T Henderson, J Heidemann, H Kruse... - ..., 1999 - merlot.levkowetz.com
... BPK98] also investigated unlimited byte counting in conjunction with various ACK **filtering** algorithms (discussed in ... with an "ECN-Capable Transport" bit set in the IP header of each **packet**. ... for the node detecting the corruption to return information about the **corrupt packet** to the ...
Related articles - View as HTML - All 11 versions

[HTML] Ongoing TCP Research Related to Satellites [HTML] from ietf.org
J Griner, K Scott, J Heidemann, H Kruse ... - 2000 - tools.ietf.org
... [BPK97,BPK98] also investigated unlimited byte counting in conjunction with various ACK **filtering** algorithms (discussed ... throughput will still suffer in the face of non-congestion related **packet** loss. ... in the face of dropped segments is reduced when using N **parallel** connections. ...
Cached - All 25 versions

[PDF] Integrating Windows NT 4.0 into a TCP/IP Environment [PDF] from tiera.ru
B Payne - CELLAR - bib.tiera.ru
... IP provides **packet** delivery for all other protocols within the suite. It is used primarily to route packets between different hosts. ... It also features peripheral interfaces for serial (two 16550 buffered UARTs), **parallel** (IEEE- 1284 EPP/ECP), keyboard, speaker, floppy, IDE, and USB. ...
View as HTML - All 3 versions

[PDF] Scalable compression and transmission of internet multicast video [PDF] from berkeley.edu
SR McCanne - 1996 - eecs.berkeley.edu
... 13 2 Related Work 14 2.1 **Packet** Video Transmission: An Overview . . . . . 14 2.1.1 Circuit-switched Networks . . . . . 15 2.1.2 **Packet**-switched Networks . . . .
Cited by 206 - Related articles - View as HTML - Library Search - All 19 versions

Dealing with server corruption in weakly consistent replicated data systems [PDF] from espol.edu.ec
MJ Spreitzer, MM Theimer, K Petersen ... - Wireless Networks, 1999 - Springer
... Network connec- tivity for mobile machines might, for example, involve infra-red, **packet** radio, modems, and ... Figure 6 illustrates how this enables the receiver P to defend against **corrupt** server R's ... servers from dropping a **tail** of the sequence accepted at some server, but that is a ...
Cited by 35 - Related articles - BL Direct - All 20 versions

Reconfiguration system and method for high-speed mesh connected local area network
LB Lamport, TL Rodeheffer... - US Patent 5,138,615, 1992 - Google Patents
... 19 5,138,615 FIFO I Arriving **Packet** 310 Address = Link # + **Packet** Addr Routing Table Link Vectors Address Bytes **Packet** Addr r ... H27 802 804 806 808 FIGURE 17 HARDWARE SURVEY I HARDWARE POLLING I MESSAGE EXCHANGE STATUS CHANGE **FILTER** T INITIATE ...
Cited by 171 - Related articles - All 2 versions

[PDF] 27. Distributed Transactions [PDF] from mit.edu
AC RAISES... - mit.edu
... **packet** no no TCP IP + port 16.12.3.134 / 3451 byte stream yes yes RPC TCP + procedure 16.12.3.134 / 3451 / Open arg. record yes yes E-mail host name + user blampson@microsoft. com String no yes 3 W. Dally: A universal **parallel** computer architecture. ...
Related articles - View as HTML - All 67 versions

Ex.1002
CISCO SYSTEMS, INC. / Page 106 of 256

Classification of Ultra High Range Resolution Radar Using Decision Boundary Analysis. [PDF] from dtic.mil
CL Eisenbies - 1994 - DTIC Document
... 17 3. Original Signal Space Projected with Conventional Multiresolution Analysis 29 4. Original Signal Space Projected into Wavelet **Packet** Subspaces ..... 30 ... performance. Examine the effect of signatures with noise flashes (**corrupt** signatures) ... Any processing or **filtering** ...
Cited by 10 - Related articles - Library Search - All 5 versions

Executing a program on the MIT tagged-token dataflow architecture
RS Nikhil - Computers, IEEE Transactions on, 1990 - ieeexplore.ieee.org
... Id programs are compiled to dynamic dataflow graphs, a **parallel** machine language. ... I. INTRODUCTION HERE are several commercial and research efforts T currently underway to build **parallel** computers with performance far beyond what is possible today. ...
Cited by 4 - Related articles - All 8 versions

High-speed mesh connected local area network
MD Schroeder, RM Needham, CP Thacker ... - US Patent ..., 1992 - Google Patents
... 17 HARDWARE SURVEY I HARDWARE POLLING MESSAGE EXCHANGE STATUS CHANGE **FILTER** T INITIATE ... of using a mesh connected LAN is the availability of many **parallel** communications ... to the number of nodes that must receive and retransmit a message **packet**. ...
Cited by 108 - Related articles - All 2 versions

Detectors and Data Analysis Techniques for Wide Field Optical Imaging [PS] from cam.ac.uk
MJ Irwin - Instrumentation for large telescopes: VII Canary ..., 1997 - books.google.com
... This is accomplished by **parallel** sequencing the triads of electrodes with clocking waveforms of the type shown in figure 8. As each row reaches ... On reaching the end-of-the-line, each charge **packet** is detected as a voltage across a capacitance, amplified by an on-chip amplifier ...
Cited by 3 - Related articles - All 4 versions

[BOOK] Scalable multimedia communication with internet multicast, light-weight sessions, and the mbone [PDF] from psu.edu
SR McCanne - 1998 - Citeseer
... a router at the edge of a distance-based scope boundary cannot prune a flow because the TTL field in the underlying **packet** stream can ... to enhance the point-to-point protocols with multipoint negotiation and to add new services within the network that multiplex and **filter** streams ...
Cited by 25 - Related articles - View as HTML - Library Search - All 16 versions

Reconfiguration system and method for high-speed mesh connected local area network
LB Lamport, TL Rodeheffer - EP Patent 0,404,423, 1995 - freepatentsonline.com
... The primary advantage of using a mesh connected LAN is the availability of many **parallel** communications paths. ... Each **packet** includes a header that specifies the destination of the **packet**, and a **tail** which declares the end of the **packet**. ...
Cited by 14 - Related articles - Cached

Adaptive stochastic resonance [PDF] from marks.mannet.cc
S Mitaim, ... - Proceedings of the IEEE, 1998 - ieeexplore.ieee.org
... SR designs might lead to better schemes to **filter** or multiplex the faint signals found in spread spectrum com ... SR designs might also exploit the signal- based crosstalk noise found in cellular systems [142], [229], Ethernet **packet** flows [143], or ... (a) The **parallel** associative structure ...
Cited by 142 - Related articles - Library Search - BL Direct - All 22 versions

[BOOK] Underwater radio remote control and telemetry. [PDF] from sfu.ca
W Hue - 1995 - summit.sfu.ca
... 101 Appendix D Source Code for **Packet** Test Programs .... 27 Figure 3-3 Test Transmitter Schematic ..... 29 Figure 3-4 Transmitter Harmonic **Filter** Response ....
Related articles - Library Search - All 3 versions

[PDF] Per virtual circuit credit based flow control on a wide area ATM network [PDF] from tripod.com
SW Seetharam - 1994 - members.tripod.com
... Packets will subsequently either time out or the error codes will indicate an erroneous **packet**. These packets ... This is performed in **parallel** fashion 32 bits at a time [Seet93a]. ... Page 24. AT&T 600A 622 Mhz SAW (surface acoustic wave) **filter** that recovers the bit clock (1.608 ns). ...
Related articles - View as HTML - Library Search - All 2 versions

[PDF] The design of a ring communication network [PDF] from cam.ac.uk
S Temple - 1984 - cl.cam.ac.uk
... AFC Address **Filtering** Chip BSP Byte Stream Protocol B/W Bandwidth CFR Cambridge Fast ... Local area networks evolved from larger **packet** switching networks such as the ARPANET ... **Parallel** processing, in which computations are split up and assigned to many processors ...
Cited by 10 - Related articles - All 5 versions

Create email alert

Ex.1002
CISCO SYSTEMS, INC. / Page 107 of 256

parallel packet filter corrupt tail Search

About Google Scholar - All About Google - My Citations

©2012 Google

Ex.1002
CISCO SYSTEMS, INC. / Page 108 of 256

UNITED STATES PATENT AND TRADEMARK OFFICE

UNITED STATES DEPARTMENT OF COMMERCE
United States Patent and Trademark Office
Address: COMMISSIONER FOR PATENTS
P.O. Box 1450
Alexandria, Virginia 22313-1450
www.uspto.gov

BIB DATA SHEET

CONFIRMATION NO. 3474

SERIAL NUMBER	FILING or 371(c) DATE	CLASS	GROUP ART UNIT	ATTORNEY DOCKET NO.
12/807,641	09/10/2010 RULE	726	2439	802-001C

APPLICANTS
Andrew K. Krumel, San Jose, CA;

**** CONTINUING DATA **************************
This application is a CON of 11/374,465 03/13/2006 ABN
which is a CON of 09/611,775 07/07/2000 PAT 7,013,482

**** FOREIGN APPLICATIONS **************************

**** IF REQUIRED, FOREIGN FILING LICENSE GRANTED **** ** SMALL ENTITY **
10/15/2010

Foreign Priority claimed	☐ Yes ☑ No	☐ Met after Allowance	STATE OR COUNTRY	SHEETS DRAWINGS	TOTAL CLAIMS	INDEPENDENT CLAIMS
35 USC 119(a-d) conditions met	☐ Yes ☑ No		CA	14	30	1
Verified and Acknowledged	/MICHAEL J SIMITOSKI/ Examiner's Signature	Initials				

ADDRESS
Alan R. Loudermilk
Loudermilk & Associates
511 N. Washington Avenue
Marshall, TX 75670
UNITED STATES

TITLE
Real time firewall/data protection systems and methods

FILING FEE RECEIVED		
870	FEES: Authority has been given in Paper No._____ to charge/credit DEPOSIT ACCOUNT No._____ for following:	☐ All Fees ☐ 1.16 Fees (Filing) ☐ 1.17 Fees (Processing Ext. of time) ☐ 1.18 Fees (Issue) ☐ Other _____ ☐ Credit

Index of Claims	Application/Control No.	Applicant(s)/Patent Under Reexamination
	12807641	KRUMEL, ANDREW K.
	Examiner	Art Unit
	MICHAEL SIMITOSKI	2439

✓	Rejected	-	Cancelled	N	Non-Elected	A	Appeal
=	Allowed	÷	Restricted	I	Interference	O	Objected

☐ Claims renumbered in the same order as presented by applicant ☐ CPA ☐ T.D. ☐ R.1.47

CLAIM		DATE								
Final	Original	03/02/2012								
	67	✓								
	68	✓								
	69	✓								
	70	✓								
	71	✓								
	72	✓								
	73	✓								
	74	✓								
	75	✓								
	76	✓								
	77	✓								
	78	✓								
	79	✓								
	80	✓								
	81	✓								
	82	✓								
	83	✓								
	84	✓								
	85	✓								
	86	✓								
	87	✓								
	88	✓								
	89	✓								
	90	✓								
	91	✓								
	92	✓								
	93	✓								
	94	✓								
	95	✓								
	96	✓								

UNITED STATES PATENT AND TRADEMARK OFFICE

UNITED STATES DEPARTMENT OF COMMERCE
United States Patent and Trademark Office
Address: COMMISSIONER FOR PATENTS
P.O. Box 1450
Alexandria, Virginia 22313-1450
www.uspto.gov

APPLICATION NUMBER	FILING OR 371(C) DATE	FIRST NAMED APPLICANT	ATTY. DOCKET NO./TITLE
12/807,641	09/10/2010	Andrew K. Krumel	802-001C

CONFIRMATION NO. 3474

Alan R. Loudermilk
Loudermilk & Associates
511 N. Washington Avenue
Marshall, TX 75670

PUBLICATION NOTICE

OC000000049260214

Title: Real time firewall/data protection systems and methods

Publication No.US-2011-0197273-A1
Publication Date:08/11/2011

NOTICE OF PUBLICATION OF APPLICATION

The above-identified application will be electronically published as a patent application publication pursuant to 37 CFR 1.211, et seq. The patent application publication number and publication date are set forth above.

The publication may be accessed through the USPTO's publically available Searchable Databases via the Internet at www.uspto.gov. The direct link to access the publication is currently http://www.uspto.gov/patft/.

The publication process established by the Office does not provide for mailing a copy of the publication to applicant. A copy of the publication may be obtained from the Office upon payment of the appropriate fee set forth in 37 CFR 1.19(a)(1). Orders for copies of patent application publications are handled by the USPTO's Office of Public Records. The Office of Public Records can be reached by telephone at (703) 308-9726 or (800) 972-6382, by facsimile at (703) 305-8759, by mail addressed to the United States Patent and Trademark Office, Office of Public Records, Alexandria, VA 22313-1450 or via the Internet.

In addition, information on the status of the application, including the mailing date of Office actions and the dates of receipt of correspondence filed in the Office, may also be accessed via the Internet through the Patent Electronic Business Center at www.uspto.gov using the public side of the Patent Application Information and Retrieval (PAIR) system. The direct link to access this status information is currently http://pair.uspto.gov/. Prior to publication, such status information is confidential and may only be obtained by applicant using the private side of PAIR.

Further assistance in electronically accessing the publication, or about PAIR, is available by calling the Patent Electronic Business Center at 1-866-217-9197.

Office of Data Managment, Application Assistance Unit (571) 272-4000, or (571) 272-4200, or 1-888-786-0101

PATENT APPLICATION FEE DETERMINATION RECORD

Substitute for Form PTO-875

Application or Docket Number: 12/807,641

APPLICATION AS FILED - PART I

FOR	(Column 1) NUMBER FILED	(Column 2) NUMBER EXTRA	SMALL ENTITY RATE($)	SMALL ENTITY FEE($)	OR	OTHER THAN SMALL ENTITY RATE($)	OTHER THAN SMALL ENTITY FEE($)
BASIC FEE (37 CFR 1.16(a), (b), or (c))	N/A	N/A	N/A	165		N/A	
SEARCH FEE (37 CFR 1.16(k), (i), or (m))	N/A	N/A	N/A	270		N/A	
EXAMINATION FEE (37 CFR 1.16(o), (p), or (q))	N/A	N/A	N/A	110		N/A	
TOTAL CLAIMS (37 CFR 1.16(i))	30 minus 20 =	* 10	x 26 =	260	OR		
INDEPENDENT CLAIMS (37 CFR 1.16(h))	1 minus 3 =	*	x 110 =	0.00			
APPLICATION SIZE FEE (37 CFR 1.16(s))	If the specification and drawings exceed 100 sheets of paper, the application size fee due is $270 ($135 for small entity) for each additional 50 sheets or fraction thereof. See 35 U.S.C. 41(a)(1)(G) and 37 CFR 1.16(s).			0.00			
MULTIPLE DEPENDENT CLAIM PRESENT (37 CFR 1.16(j))				0.00			
* If the difference in column 1 is less than zero, enter "0" in column 2.			TOTAL	805		TOTAL	

APPLICATION AS AMENDED - PART II

		(Column 1) CLAIMS REMAINING AFTER AMENDMENT		(Column 2) HIGHEST NUMBER PREVIOUSLY PAID FOR	(Column 3) PRESENT EXTRA	SMALL ENTITY RATE($)	SMALL ENTITY ADDITIONAL FEE($)	OR	OTHER THAN SMALL ENTITY RATE($)	OTHER THAN SMALL ENTITY ADDITIONAL FEE($)
AMENDMENT A	Total (37 CFR 1.16(i))	*	Minus	**	=	x =		OR	x =	
	Independent (37 CFR 1.16(h))	*	Minus	***	=	x =		OR	x =	
	Application Size Fee (37 CFR 1.16(s))									
	FIRST PRESENTATION OF MULTIPLE DEPENDENT CLAIM (37 CFR 1.16(j))							OR		
						TOTAL ADD'L FEE		OR	TOTAL ADD'L FEE	

		(Column 1) CLAIMS REMAINING AFTER AMENDMENT		(Column 2) HIGHEST NUMBER PREVIOUSLY PAID FOR	(Column 3) PRESENT EXTRA	RATE($)	ADDITIONAL FEE($)	OR	RATE($)	ADDITIONAL FEE($)
AMENDMENT B	Total (37 CFR 1.16(i))	*	Minus	**	=	x =		OR	x =	
	Independent (37 CFR 1.16(h))	*	Minus	***	=	x =		OR	x =	
	Application Size Fee (37 CFR 1.16(s))									
	FIRST PRESENTATION OF MULTIPLE DEPENDENT CLAIM (37 CFR 1.16(j))							OR		
						TOTAL ADD'L FEE		OR	TOTAL ADD'L FEE	

* If the entry in column 1 is less than the entry in column 2, write "0" in column 3.
** If the "Highest Number Previously Paid For" IN THIS SPACE is less than 20, enter "20".
*** If the "Highest Number Previously Paid For" IN THIS SPACE is less than 3, enter "3".
The "Highest Number Previously Paid For" (Total or Independent) is the highest found in the appropriate box in column 1.

UNITED STATES PATENT AND TRADEMARK OFFICE

UNITED STATES DEPARTMENT OF COMMERCE
United States Patent and Trademark Office
Address: COMMISSIONER FOR PATENTS
P.O. Box 1450
Alexandria, Virginia 22313-1450
www.uspto.gov

APPLICATION NUMBER	FILING or 371(c) DATE	GRP ART UNIT	FIL FEE REC'D	ATTY.DOCKET.NO	TOT CLAIMS	IND CLAIMS
12/807,641	09/10/2010	2439	870	802-001C	30	1

CONFIRMATION NO. 3474

UPDATED FILING RECEIPT

Alan R. Loudermilk
Loudermilk & Associates
511 N. Washington Avenue
Marshall, TX 75670

OC000000047466647

Date Mailed: 05/05/2011

Receipt is acknowledged of this non-provisional patent application. The application will be taken up for examination in due course. Applicant will be notified as to the results of the examination. Any correspondence concerning the application must include the following identification information: the U.S. APPLICATION NUMBER, FILING DATE, NAME OF APPLICANT, and TITLE OF INVENTION. Fees transmitted by check or draft are subject to collection. Please verify the accuracy of the data presented on this receipt. **If an error is noted on this Filing Receipt, please submit a written request for a Filing Receipt Correction. Please provide a copy of this Filing Receipt with the changes noted thereon. If you received a "Notice to File Missing Parts" for this application, please submit any corrections to this Filing Receipt with your reply to the Notice. When the USPTO processes the reply to the Notice, the USPTO will generate another Filing Receipt incorporating the requested corrections**

Applicant(s)

Andrew K. Krumel, San Jose, CA;

Power of Attorney:
Alan Loudermilk--32788

Domestic Priority data as claimed by applicant

This application is a CON of 11/374,465 03/13/2006 ABN
which is a CON of 09/611,775 07/07/2000 PAT 7,013,482

Foreign Applications (You may be eligible to benefit from the **Patent Prosecution Highway** program at the USPTO. Please see http://www.uspto.gov for more information.)

If Required, Foreign Filing License Granted: 10/15/2010

The country code and number of your priority application, to be used for filing abroad under the Paris Convention, is **US 12/807,641**

Projected Publication Date: 08/11/2011

Non-Publication Request: No

Early Publication Request: No
** **SMALL ENTITY** **

Title

Real time firewall/data protection systems and methods

Preliminary Class

726

PROTECTING YOUR INVENTION OUTSIDE THE UNITED STATES

Since the rights granted by a U.S. patent extend only throughout the territory of the United States and have no effect in a foreign country, an inventor who wishes patent protection in another country must apply for a patent in a specific country or in regional patent offices. Applicants may wish to consider the filing of an international application under the Patent Cooperation Treaty (PCT). An international (PCT) application generally has the same effect as a regular national patent application in each PCT-member country. The PCT process **simplifies** the filing of patent applications on the same invention in member countries, but **does not result** in a grant of "an international patent" and does not eliminate the need of applicants to file additional documents and fees in countries where patent protection is desired.

Almost every country has its own patent law, and a person desiring a patent in a particular country must make an application for patent in that country in accordance with its particular laws. Since the laws of many countries differ in various respects from the patent law of the United States, applicants are advised to seek guidance from specific foreign countries to ensure that patent rights are not lost prematurely.

Applicants also are advised that in the case of inventions made in the United States, the Director of the USPTO must issue a license before applicants can apply for a patent in a foreign country. The filing of a U.S. patent application serves as a request for a foreign filing license. The application's filing receipt contains further information and guidance as to the status of applicant's license for foreign filing.

Applicants may wish to consult the USPTO booklet, "General Information Concerning Patents" (specifically, the section entitled "Treaties and Foreign Patents") for more information on timeframes and deadlines for filing foreign patent applications. The guide is available either by contacting the USPTO Contact Center at 800-786-9199, or it can be viewed on the USPTO website at http://www.uspto.gov/web/offices/pac/doc/general/index.html.

For information on preventing theft of your intellectual property (patents, trademarks and copyrights), you may wish to consult the U.S. Government website, http://www.stopfakes.gov. Part of a Department of Commerce initiative, this website includes self-help "toolkits" giving innovators guidance on how to protect intellectual property in specific countries such as China, Korea and Mexico. For questions regarding patent enforcement issues, applicants may call the U.S. Government hotline at 1-866-999-HALT (1-866-999-4158).

LICENSE FOR FOREIGN FILING UNDER

Title 35, United States Code, Section 184

Title 37, Code of Federal Regulations, 5.11 & 5.15

GRANTED

The applicant has been granted a license under 35 U.S.C. 184, if the phrase "IF REQUIRED, FOREIGN FILING LICENSE GRANTED" followed by a date appears on this form. Such licenses are issued in all applications where the conditions for issuance of a license have been met, regardless of whether or not a license may be required as

set forth in 37 CFR 5.15. The scope and limitations of this license are set forth in 37 CFR 5.15(a) unless an earlier license has been issued under 37 CFR 5.15(b). The license is subject to revocation upon written notification. The date indicated is the effective date of the license, unless an earlier license of similar scope has been granted under 37 CFR 5.13 or 5.14.

This license is to be retained by the licensee and may be used at any time on or after the effective date thereof unless it is revoked. This license is automatically transferred to any related applications(s) filed under 37 CFR 1.53(d). This license is not retroactive.

The grant of a license does not in any way lessen the responsibility of a licensee for the security of the subject matter as imposed by any Government contract or the provisions of existing laws relating to espionage and the national security or the export of technical data. Licensees should apprise themselves of current regulations especially with respect to certain countries, of other agencies, particularly the Office of Defense Trade Controls, Department of State (with respect to Arms, Munitions and Implements of War (22 CFR 121-128)); the Bureau of Industry and Security, Department of Commerce (15 CFR parts 730-774); the Office of Foreign AssetsControl, Department of Treasury (31 CFR Parts 500+) and the Department of Energy.

NOT GRANTED

No license under 35 U.S.C. 184 has been granted at this time, if the phrase "IF REQUIRED, FOREIGN FILING LICENSE GRANTED" DOES NOT appear on this form. Applicant may still petition for a license under 37 CFR 5.12, if a license is desired before the expiration of 6 months from the filing date of the application. If 6 months has lapsed from the filing date of this application and the licensee has not received any indication of a secrecy order under 35 U.S.C. 181, the licensee may foreign file the application pursuant to 37 CFR 5.15(b).

OPAP IAP1
MAR 2 4 2011
PATENT & TRADEMARK OFFICE

Attorney Docket No.: 802-001C

IN THE UNITED STATES PATENT AND TRADEMARK OFFICE

In Re Application of: Krumel	)	
Serial No.: 12/807,641	)	
Filed: September 10, 2010	)	Examiner:
For: REAL TIME FIREWALL/DATA PROTECTION SYSTEMS AND METHODS	)	Group Art Unit:

Mail Stop Missing Parts
Commissioner for Patents
P.O. Box 1450
Alexandria, VA 22313-1450

PETITION AND FEE FOR EXTENSION OF TIME UNDER 37 C.F.R. 1.136(a)

Dear Commissioner,

Applicant hereby petitions for a three-month extension of time in order to respond to the notice of missing parts mailed October 20, 2010. Please charge Deposit Account No. 50-0251 in the amount of $555.00 for the extension fee. A response to the notice accompanies this submission.

Please charge any additional fees due, or credit any overpayment, to Deposit Account No. 50-0251.

Respectfully submitted

05/03/2011 MTEKLEMI 00000005 500251 12807641
01 FC:2254 310.00 DA

Alan R. Loudermilk
Registration No. 32,788
Attorney for Applicant(s)

March 21, 2011

Loudermilk & Associates
511 N. Washington Avenue
Marshall, Texas 75670
903-407-4213

03/25/2011 JADD01 00000034 500251 12807641
07 FC:2253 555.00 DA

I hereby certify that the foregoing is being deposited with the US postal service, postal prepaid, or faxed, to Mail Stop Missing Parts, Commissioner for Patents, P.O. Box 1450, Alexandria, VA 22313-1450, on the date indicated above.

UNITED STATES PATENT AND TRADEMARK OFFICE

Commissioner for Patents
United States Patent and Trademark Office
P.O. Box 1450
Alexandria, VA 22313-1450
www.uspto.gov

Alan R. Loudermilk
Loudermilk & Associates
511 N. Washington Avenue
Marshall TX 75670

MAILED
APR 22 2011
OFFICE OF PETITIONS

In re Application of :
Krumel :
Application No. 12/807,641 : ON PETITION
Filed: September 10, 2010 :
Attorney Docket No. 802-001C :
For: REAL TIME FIREWALL/DATA
PROTECTION SYSTEMS AND METHODS

This is a decision on the petition, filed March 24, 2011, requesting, in effect, withdrawal of the Notice of to File Missing Parts of Nonprovisional Application (Notice), mailed October 20, 2010, insofar as it alleges Figure 5 was omitted when the application was filed. The petition will be treated under 37 CFR 1.53(e).

The petition under 37 CFR 1.53(e) is **GRANTED**.

The application was filed on September 10, 2010. On October 20, 2010, the Office of Patent Application Processing mailed a Notice informing applicant that Figure 5 appeared to have been omitted from the application filed on September 10, 2010.

In response to the Notice, petitioner filed the present petition. Petitioner requests that Figure 5 be accorded a filing date of September 10, 2010 on the basis that it was received in the Patent and Trademark Office (PTO) on September 10, 2010.

In support, the petition is accompanied by a copy of applicant's itemized postcard receipt showing a Patent Office generated barcode citing September 10, 2010 as the date of receipt of papers assigned Application No. 12/807,641. The postcard lists that the filing included, *inter alia*, 14 sheets of drawings. A review of the application file reveals that there are 13 pages present, depicting Figures 1a, 1b, 2, 3, 4, 6, 7, 8, 9, 10, 11, 12, and 13.

The return postcard constitutes *prima facie* evidence that 14 sheets of drawings, including missing Figure 5, were filed on September 10, 2010. MPEP 503. Accordingly, the request is granted.

Pursuant to petitioner's request, the $400.00 fee submitted with the instant petition will be refunded to petitioner's deposit account.

The application is being returned to Office of Patent Application Processing for further pre-examination processing, with a filing date of **September 10, 2010,** adding the copy of Figure 5 supplied with the present petition to the drawings for the application.

Any inquiries pertaining to this matter may be directed to the undersigned at (571) 272-3230.

Shirene Willis Brantley

Shirene Willis Brantley
Senior Petitions Attorney
Office of Petitions

OPAP IAP1
MAR 2 4 2011
PATENT & TRADEMARK OFFICE

Attorney Docket No.: 802-001C

IN THE UNITED STATES PATENT AND TRADEMARK OFFICE

In Re Application of: Krumel

Serial No.: 12/807,641

Filed: September 10, 2010

For: REAL TIME FIREWALL/DATA PROTECTION SYSTEMS AND METHODS

Examiner:

Group Art Unit:

04/22/2011 CKHLOK 00000001 500251 12807641
01 FC:2202 260.00 DA

Adjustment date: 04/22/2011 CKHLOK
03/25/2011 JADD01 00000034 500251 12807641
04 FC:2202 260.00 CR

Adjustment date: 04/22/2011 CKHLOK
03/25/2011 JADD01 00000034 500251 12807641
06 FC:1462 400.00 CR

Mail Stop Missing Parts
Commissioner for Patents
P.O. Box 1450
Alexandria, VA 22313-1450

PETITION FOR DATE OF DEPOSIT FOR DRAWING AND STATEMENT IN SUPPORT OF SAME

Sir:

In response to the notice to file missing parts mailed October 20, 2010, Applicant hereby petitions for the date of deposit of Fig. 5 as the date of filing this application. In support thereof, Applicant states as follows.

Applicant has reviewed the file for this application and submits the following.

Attached is a copy of the application transmittal for this application, which includes the submission of 14 sheets of formal drawings. This would include Fig. 5 as one of the 14 sheets.

At the time of filing the application, Applicant submitted a return postcard that requested that the USPTO acknowledge receipt of the submission, including "Formal Drawings (14 sheets)". This would include Fig. 5. Attached is a copy of the return postcard received from the USPTO acknowledging such receipt.

Applicant also submits a copy of the 14 sheets of formal drawings included in the file for this application, which includes Fig. 5.

Accordingly, Applicant respectfully requests that this petition be granted, and that the application be processed, with Fig. 5 included as part of the application as filed. Applicant also notes that the ultimate parent of this application resulted in USP 7,013,482, which also included Fig. 5. Further, the application transmittal for this application incorporated by reference parent

03/25/2011 JADD01 00000034 500251 12807641
06 FC:1462 400.00 DA

UNITED STATES PATENT & TRADEMARK OFFICE
Washington, D.C. 20231

REQUEST FOR PATENT FEE REFUND

1 Date of Request: 04/18/11

2 Serial/Patent # 12/807,641

	3 Please refund the following fee(s):	4 PAPER NUMBER	5 DATE FILED	6 AMOUNT
	Filing			$
	Amendment			$
	Extension of Time			$
	Notice of Appeal/Appeal			$
X	Petition		03/24/11	$ 400.00
	Issue			$
	Cert of Correction/Terminal Disc.			$
	Maintenance			$
	Assignment			$
	Other			$

7 TOTAL AMOUNT OF REFUND: $ 400.00

8 TO BE REFUNDED BY:

	Treasury Check
X	Credit Deposit A/C #:

9 5 0 -- 0 2 5 1

10 REASON:

	Overpayment
	Duplicate Payment
X	No Fee Due (Explanation):

Date stamped itemized post card proves that allegedly omitted figure was present on Day 1. Refund petition fee.

11 REFUND REQUESTED BY:

TYPED/PRINTED NAME: Shirene Willis Brantley TITLE: Petitions Attorney

SIGNATURE: Shirene Willis Brantley PHONE: 571 272-3230

OFFICE: Office of Petitions

****

THIS SPACE RESERVED FOR FINANCE USE ONLY:

APPROVED: DC DATE: 4/22/11

Instructions for completion of this form appear on the back. After completion, attach white and yellow copies to the official file and mail or hand-carry to:

Office of Finance
Refund Branch
Crystal Park One, Room 802B

FORM PTO 1577
(01/90)

Form PTO-1449
(REV. 7-92)

U.S. DEPARTMENT OF COMMERCE
Patent and Trademark Office

INFORMATION DISCLOSURE STATEMENT BY APPLICANT

(Use several sheets if necessary)

OPAP IAP7 APR 08 2011 PATENT & TRADEMARK OFFICE

Attorney's Docket Number	Serial No.
802-001C	12/807,641
Applicant(s): KRUMEL	
Filing Date: 9/10/10	Group Art Unit: 2134

U.S. PATENT DOCUMENTS

*EXAMINER INITIAL	DOCUMENT NUMBER							DATE	NAME	CLASS	SUBCLASS	FILING DATE IF APPROPRIATE
	5	3	4	3	4	7	1	08-1994	Cassagnol	370	401	
	5	4	2	6	3	7	8	6/20/95	Ong	326	39	
	5	4	2	6	3	7	9	06-1995	Trimberger	326	39	
	5	5	3	0	6	9	5	06-1996	Dighe	370	232	
	5	5	9	0	0	6	0	12-1996	Granville	702	155	
	5	6	5	7	3	1	6	08-1997	Nakagaki	370	394	
	5	7	4	0	3	7	5	4/14/98	Dunne et al.	395	200.68	
	5	7	4	5	2	2	9	04-1998	June	356	73	
	5	7	9	4	0	3	3	8/11/98	Aldebert et al.	395	653	
	5	8	3	5	7	2	6	11/10/98	Shwed et al.	395	200.59	
	5	8	8	4	0	2	5	3/16/99	Baehr et al.	395	187.01	
	5	9	0	3	5	6	6	05-1999	Flammer	370	406	
	5	9	0	5	8	5	9	05-1999	Holloway	713	201	
	5	9	6	8	1	7	6	10/19/99	Nessett et al.	713	201	
	5	9	7	4	5	4	7	10-1999	Klimenko	713	2	
	6	0	0	3	1	3	3	12/14/99	Moughanni et al.	713	200	
	6	0	0	9	4	7	5	12/28/99	Shrader	709	249	
	6	0	2	0	7	5	8	02-2000	Patel	326	40	
	6	0	7	6	1	6	8	06-2000	Fiveash	713	201	
	6	0	1	1	7	9	7	01-2000	Sugawara	370	395.51	
	6	0	4	9	2	2	2	4/11/00	Lawmann	326	38	
	6	0	5	2	7	8	5	04-2000	Lin	709	225	
	6	0	5	2	7	8	8	04-2000	Wesinger	713	201	

EXAMINER	DATE CONSIDERED

*EXAMINER: Initial if citation considered, whether or not citation is in conformance with MPEP § 609. Draw line through citation if not in conformance and not considered. Include copy of this form with next communication to applicant.

Form PTO-1449 (REV. 7-92)	U.S. DEPARTMENT OF COMMERCE Patent and Trademark Office	Attorney's Docket Number	Serial No.
INFORMATION DISCLOSURE STATEMENT BY APPLICANT (Use several sheets if necessary)		802-001C	12/807,641
		Applicant(s): KRUMEL	
		Filing Date: 9/10/10	Group Art Unit: 2134

U.S. PATENT DOCUMENTS

*EXAMINER INITIAL	DOCUMENT NUMBER	DATE	NAME	CLASS	SUBCLASS	FILING DATE IF APPROPRIATE
	6 0 7 8 7 3 6	6/20/00	Guccione	395	500.17	
	6 0 9 2 1 0 8	07-2000	DiPlacido	709	224	
	6 0 9 2 1 2 3	07-2000	Steffan	710	8	
	6 1 3 3 8 4 4	10-2000	Ahne	340	815.45	
	6 1 3 4 6 6 2	10-2000	Levy	713	200	
	6 1 5 1 6 2 5	11-2000	Swales	709	218	
	6 1 7 5 8 3 9	01-2001	Takao	715	500	
	6 1 8 2 2 2 5	01-2001	Hagiuda	713	201	
	6 2 1 5 7 6 9	04-2001	Ghani	370	230	
	6 2 2 3 2 4 2	04-2001	Sheafor et al.	710	317	
	6 3 1 0 6 9 2	10-2001	Fan	358	1.14	
	6 3 2 6 8 0 6	12-2001	Fallside	326	38	
	6 3 3 3 7 9 0	12-2001	Kageyama	358	1.15	
	6 3 3 5 9 3 5	01-2002	Kadambi	370	396	
	6 3 4 3 3 2 0	01-2002	Fairchild	709	224	
	6 3 6 3 5 1 9	02-2002	Levi	716	16	
	6 3 7 4 3 1 8	04-2002	Hayes	710	107	
	6 3 8 9 5 4 4	05-2002	Katagiri	713	300	
	6 4 1 4 4 7 6	07-2002	Yagi	324	127	
	6 4 3 0 7 1 1	08-2002	Sekizawa	714	47	
	6 5 4 9 9 4 7	04-2003	Suzuki	709	229	
	6 6 0 8 8 1 6	03-2003	Nichols	370	235	
	6 6 2 8 6 5 3	09-2003	Salim	370	389	

EXAMINER	DATE CONSIDERED

*EXAMINER: Initial if citation considered, whether or not citation is in conformance with MPEP § 609. Draw line through citation if not in conformance and not considered. Include copy of this form with next communication to applicant.

Form PTO-1449 (REV. 7-92)	U.S. DEPARTMENT OF COMMERCE Patent and Trademark Office	Attorney's Docket Number	Serial No.
INFORMATION DISCLOSURE STATEMENT BY APPLICANT (Use several sheets if necessary)		B02-001C	12/807,641
		Applicant(s): KRUMEL	
		Filing Date: 9/10/10	Group Art Unit: 2134

	6	6	4	0	3	3	4	10-2003	Rasmussen		717	171	

U.S. PATENT DOCUMENTS

*EXAMINER INITIAL	DOCUMENT NUMBER							DATE	NAME	CLASS	SUBCLASS	FILING DATE IF APPROPRIATE
	6	6	9	1	1	6	8	02-2004	Bal	709	238	
	6	7	0	0	8	9	1	03-2004	Wong			
	6	7	3	4	9	8	5	05-2004	Ochiai	358	1.15	
	6	7	7	1	6	4	6	08-2004	Sarkissian	370	392	
	6	7	7	9	0	0	4	08-2004	Zintel	709	227	
	6	7	9	1	9	9	2	09-2004	Yun	370	415	

FOREIGN PATENT DOCUMENTS

	DOCUMENT NUMBER							DATE	COUNTRY	CLASS	SUBCLASS	TRANSLATION	
	WO	96/	3	4	4	7	9	10/31/96	PCT			YES	NO
	WO	99/	4	8	3	0	3	9/23/99	PCT				
	WO	00/	0	2	1	1	4	1/13/00	PCT				

OTHER DOCUMENTS (Including Author, Title, Date, Pertinent Pages, Etc.)

		"Baseband Specification Part B", Bluetooth Spec. v. 1.1, Edited by Henrik Hedlund in conjunction with Bluetooth.org, Feb. 2001, Available from Internet: http://www.bluetooth.com/developer/specification/core.asp, pp. 41-46.
		Comer, Douglas, "Internetworking with TCP/IP. Vol. 1: Principles, Protocols, and Architectures", 4th Edition, New Jersey: Prentice Hall, 2000, Ch. 7, pp. 95-113, Ch. 12, pp. 197-206.
		Feit. Dr. Sidnie, "Architecture, Protocols, and Implementation with IPv6 and IP Security," TCP/IP Signature Edition, San Francisco: McGraw-Hill, Ch. 9: pp. 274-282, Ch. 11: pp. 432-457, 1999.
		"Host Controller Interface Functional Specification, Part H:1" Edited by Christian Johansson in conjunction with Bluetooth.org., Feb. 2001, Available from Internet: **http://www.bluetooth.com/developer/specification/core.asp**, pp. 543-550.
		"Jini Architecture Specifications." Version 1.1, Sun Microsystems, Inc., October 2000. Available from Internet: http://www.sun.com/jini/specs/jini1_1.pdf, pp. 1-20.
		"Jini Device Architecture Specifications." Version 1.1, Sun Microsystems, Inc., October 2000. Available from

EXAMINER	DATE CONSIDERED

*EXAMINER: Initial if citation considered, whether or not citation is in conformance with MPEP § 609. Draw line through citation if not in conformance and not considered. Include copy of this form with next communication to applicant.

Form PTO-1449 (REV. 7-92)	U.S. DEPARTMENT OF COMMERCE Patent and Trademark Office	Attorney's Docket Number	Serial No.
INFORMATION DISCLOSURE STATEMENT BY APPLICANT (Use several sheets if necessary)		802-001C	12/807,641
		Applicant(s): KRUMEL	
		Filing Date: 9/10/10	Group Art Unit: 2134

		Internet: **http://www.sun.com/jini/specs/devicearch1_1.pdf**, pp. 1-14.
OTHER DOCUMENTS (Including Author, Title, Date, Pertinent Pages, Etc.)		
		"Logical Link Control and Adaptation Protocol Specification." Part D, Edited by Jon Inouye in conjunction with Bluetooth.org., Feb. 2001, Available from Internet: **http://www.bluetooth.com/developer/specification/core.asp**, pp. 257-260.
		Sollins, K., "The TFTP Protocol (Revision 2.0)", MIT, July 1992. Available from Internet: **http://www.cis.ohio-state.edu/cgi-bin/rfc/rfc1350.html**, pp. 1-10.
		Tanenbaum, Andrew S., "Computer Networks", 3rd Edition, Vrije Universiteit, Amsterdam, The Netherlands, pub. New Jersey: Prentice Hall, 1996, 28-44.
		Wilder, Floyd, "A Guide to the TCP/IP Protocol Suite", 2nd Edition, Boston: Artech House, 1998, Ch. 3, pp. 123-162.
		3Com, "SuperStack 3 Firewall" 2000 3Com
		Hughes, James "A High Speed Firewall Architecture for ATM/OC-3c" Feb. 1996
		IBM Technical Disclosure Bulletins NN8606320 (1986), NN950431 (1995), NA81123528 (1981), NN9704141 (1997), NN9512419 (1995), NN9502341 (1995), NN9308183 (1993), NN8606254 (1986), NN83102393 (1983)
		Lakshman, T.V. "High Speed Policy-Based Packet Forwarding Using Efficient Multi-Dimensional Range Matching" 1998 ACM, pp 203-214
		Network ICE Corp., "Black ICE Pro User's Guide Version 2.0" June 2000 (archive.org)
		Packeteer, Inc., "PacketShaper 4000 Getting Started Version 4.0" March 1999
		Symantec, Inc. "Norton Personal Firewall 2000 User's Guide Version 2.0" June 2000 (archive.org)
		Xu, Jun and Mukesh Singhal "Design of a High-Performance ATM Firewall" 1999 ACM
		Xu, Jun and Mukesh Singhal, "Design of a High-Performance ATM Firewall" 1998 ACM pp 93-102
		AARNet, "ATM", <http://www.aarnet.edu.au/engineering/networkdesign/mtu/atm.html>
		Derfler, Jr., Frank J. et al. "How Networks Work" Sept. 2000, pp 162-167
		Newton, Harry, "Newton's TELECOM Dictionary" 2003 CMP Books, pp. 78-79
		Unknown, "ATM Efficiency" <http://homepages.uel.ac.uk/u0227461/Website/efficiency.htm>

EXAMINER	DATE CONSIDERED
*EXAMINER: Initial if citation considered, whether or not citation is in conformance with MPEP § 609. Draw line through citation if not in conformance and not considered. Include copy of this form with next communication to applicant.	

Form PTO-1449 (REV. 7-92)	U.S. DEPARTMENT OF COMMERCE Patent and Trademark Office	Attorney's Docket Number	Serial No.
INFORMATION DISCLOSURE STATEMENT BY APPLICANT (Use several sheets if necessary)		802-001C	12/807,641
		Applicant(s): KRUMEL	
		Filing Date: 9/10/10	Group Art Unit: 2134

U.S. PATENT DOCUMENTS

*EXAMINER INITIAL	DOCUMENT NUMBER	DATE	NAME	CLASS	SUBCLASS	FILING DATE IF APPROPRIATE
	6 3 2 1 3 3 8	11-2001	Porras et al.	726	25	
	6 2 2 2 5 4 7	04-2001	Schwuttke et al.	345	419	
	6 1 0 8 7 8 6	08-2000	Knowlson, Kenneth L.	726	11	
	6 2 4 3 8 1 5	06-2001	Antur et al.	726	11	
	6 2 8 9 0 1 3	09-2001	Lakshman et al.	370	389	
	6 2 1 9 7 0 6	04-2001	Fan et al.	709	225	
	6 9 9 0 5 9 1	01-2006	Pearson, Sterling Michael	726	22	
	2001/0039579	11-2001	Trcka et al.	709	224	

FOREIGN PATENT DOCUMENTS

	DOCUMENT NUMBER	DATE	COUNTRY	CLASS	SUBCLASS	TRANSLATION	
	JP 09117448 A	05-1997	Japan			YES	NO

OTHER DOCUMENTS (Including Author, Title, Date, Pertinent Pages, Etc.)

		OfficeConnect Internet Firewall User Guide, 3Com, February 2000, pages 1-178.
		Mogul, Jeffrey C., "Simple and Flexible Datagram Access Controls for Unix-based Gateways", March 1989.
		Biodata GmbH, "BIGfire + User Manual", V0306+, 1999.
		Excerpts from File History of related US Patent Application No. 09/611,775 (Attorney Docket No. 802-001)
		Excerpts from File History of related US Patent Application No. 11/374,465 (Attorney Docket No. 802-001B)
		Excerpts from File History of related US Patent Application No. 09/745,599 (Attorney Docket No. 802-002)
		Excerpts from File History of related US Patent Application No. 12/316,129 (Attorney Docket No. 802-002B) ABANDONED
		Excerpts from File History of related US Patent Application No. 09/746,519 (Attorney Docket No. 802-003)
		Excerpts from File History of related US Patent Application No. 11/405,299 (Attorney Docket No. 802-003B)
		Excerpts from File History of related US Patent Application No. 09/746,107 (Attorney Docket No. 802-004)

EXAMINER	DATE CONSIDERED

*EXAMINER: Initial if citation considered, whether or not citation is in conformance with MPEP § 609. Draw line through citation if not in conformance and not considered. Include copy of this form with next communication to applicant.

(19)日本国特許庁（ＪＰ）　(12)公開特許公報（Ａ）　(11)特許出願公開番号
特開平9－117448
(43)公開日　平成９年(1997)５月６日

(51)Int.Cl.[6]	識別記号	庁内整理番号	ＦＩ		技術表示箇所
Ａ６１Ｂ　6/04	３３２		Ａ６１Ｂ　6/04	３３２Ｄ	
				３３２Ｐ	

審査請求　未請求　請求項の数１　ＦＤ　（全 10 頁）

(21)出願番号　特願平7－302043

(22)出願日　平成７年(1995)10月26日

(71)出願人　000001993
株式会社島津製作所
京都府京都市中京区西ノ京桑原町１番地
(72)発明者　竹内　宏之
京都府京都市中京区西ノ京桑原町１番地株式会社島津製作所三条工場内
(74)代理人　弁理士　佐藤　祐介

(54)【発明の名称】　検診台

(57)【要約】
【課題】　便利かつ安全な、旋回機能付き検診台を得る。
【解決手段】　旋回用の押しボタンスイッチ１１と、指定した角度になったときにクローズする角度検出器１２と、角度検出信号ｄを遅延させた信号ｅを得るＣＲ回路２３およびヒステリシス付きインバータ２６と、ブレーキを解除させるブレーキ解除装置１３と、スイッチ１１からの信号ｃと角度検出信号ｄとその遅延信号ｅとが入力され、その内部の所定のロジックによってブレーキ解除信号ｆを生じてブレーキ解除装置１３を作動させるＰＬＤ２７とにより構成される。

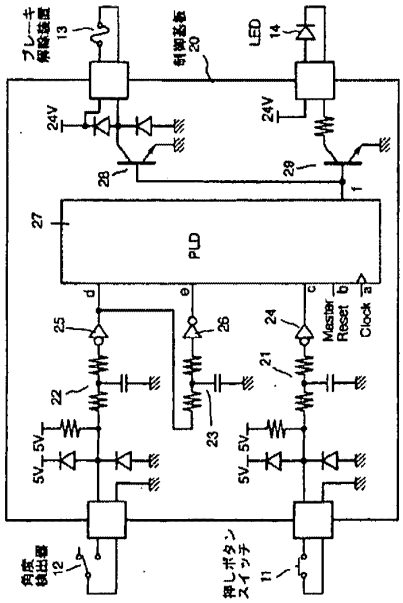

12/3/07, EAST Version: 2.1.0.14

Ex.1002
CISCO SYSTEMS, INC. / Page 126 of 256

1

【特許請求の範囲】

【請求項１】　旋回機構と、その旋回を止めるブレーキと、旋回用スイッチと、旋回角度を検出し指定した角度となったときに角度検出信号を生じる角度検出器と、上記角度検出信号を遅延させる遅延回路と、旋回用スイッチからの信号と角度検出信号と角度検出信号の遅延信号とを用いて上記ブレーキを制御する制御装置とを備えることを特徴とする検診台。

【発明の詳細な説明】

【０００１】

【発明の属する技術分野】この発明は、患者あるいは被検者をその上に横たえて医学的な診断を行なうための検診台に関し、とくにＸ線検査のために使用される検診台に関する。

【０００２】

【従来の技術】Ｘ線検査用の検診台は、Ｃ型アームにＸ線管とＸ線撮像装置とを保持させたタイプのＸ線検査装置と組み合わされて使用されることが多い。この種の検診台は、通常、天板を上下に昇降させる昇降機構と、天板を長手方向・短手方向に移動させるスライド機構とを備えている。また、水平面内で自由に回転できるよう、検診台の支柱部分に旋回機構を持たせたものもある。これは、緊急時に患者に対する処置を行なうため、あるいは１室のＸ線検査室に複数のＸ線検査装置を設置して、それぞれのＸ線検査装置に対して１台の検診台で対応させるためである。

【０００３】この旋回機構を備えた検診台では、メカニカルブレーキを設けて、これをオン・オフすることにより旋回方向の動きに対するコントロールを行ない、一定の角度で固定させることができるようにしている。

【０００４】

【発明が解決しようとする課題】しかしながら、従来の旋回機構を備えた検診台では、旋回角度がどの角度であるかを検出する機構が設けられていず、所望の指定角度で固定することが難しく、使用上不便であり、また危険でもあるという問題があった。

【０００５】この発明は、上記に鑑み、任意にメカニカルブレーキを解除して手動で旋回可能とするとともに、指定した角度に到達するとブレーキが自動的にかかってその角度で止まって固定され、さらにその指定角度を通過させて別の角度で固定させるようにすることも容易にでき、これにより使用上の便利さを格段に向上させ、さらに危険性がなく安全となるように改善した、検診台を提供することを目的とする。

【０００６】

【課題を解決するための手段】上記の目的を達成するため、この発明による検診台においては、旋回機構と、その旋回を止めるブレーキと、旋回用スイッチと、旋回角度を検出し指定した角度となったときに角度検出信号を生じる角度検出器と、上記角度検出信号を遅延させる遅延回路と、旋回用スイッチからの信号と角度検出信号と角度検出信号の遅延信号とを用いて上記ブレーキを制御する制御装置とが備えられることが特徴となっている。

【０００７】旋回用スイッチを操作することによりブレーキを解除すれば、検診台を任意に旋回することができる。指定した角度で角度検出信号が生じるように設定しておけば、その角度で生じる角度検出信号を用いてブレーキ解除を停止させ、そこでブレーキを効かせて固定することができる。角度検出信号とその遅延信号とを用いることにより、角度検出されてブレーキが確実にロックされる前にさらに旋回させれば、いったん効きはじめたブレーキを解除して旋回を続けることができるようにすることができる。ブレーキによりロックされているときに、それを上回る力で旋回させられて角度検出信号がなくなった場合に、角度検出信号とその遅延信号とを用いることによって、ブレーキが解除されることがないようにし、もって不慮の旋回による事故の誘発を防ぐことができる。

【０００８】

【発明の実施の形態】つぎに、この発明の実施の形態について図面を参照しながら詳細に説明する。図１はこの発明にかかる検診台の制御部を示すブロック図である。この図において、押しボタンスイッチ１１、角度検出器１２、ブレーキ解除装置１３、ＬＥＤ１４が制御基板２０に接続される。押しボタンスイッチ１１は旋回のオン・オフ制御用で、手動で押圧操作した後手をはなすと自動的に復帰するスイッチである。角度検出器１２は、検診台の旋回機構（図では省略）に取り付けられるリミットスイッチなどからなり、任意の角度に調節できるようになっていて、検診台がその角度までに旋回してくるとオンするようになっている。

【０００９】ブレーキ解除装置１３は、検診台の旋回に対してブレーキをかけるメカニカルブレーキの解除を行うものである。また、このブレーキ解除装置１３の動作状態を表示するためＬＥＤ１４が設けられいて、このＬＥＤ１４はブレーキ解除装置１３が作動しブレーキが解除された状態の時に点灯するようにされている。

【００１０】制御基板２０には、スイッチによるノイズ除去用のＣＲ回路２１、２２、２３およびヒステリシス付きインバータ２４、２５、２６と、ＰＬＤ（プログラマブルロジックデバイス）２７と、ブレーキ解除装置１３のドライバ用トランジスタ２８と、ＬＥＤ１４のドライバ用トランジスタ２９などが実装されている。押しボタンスイッチ１１からの信号はＣＲ回路２１およびヒステリシス付きインバータ２４を経て、波形がなまらせられチャタリングやノイズ等が除去されてＰＬＤ２７に入力される。また角度検出時にクローズする角度検出器１２からの信号は、同じくＣＲ回路２２およびヒステリシス付きインバータ２５を介してＰＬＤ２７に入力される。さらにこの信号はインバータ２５を経た後、さらに

Ex.1002
CISCO SYSTEMS, INC. / Page 127 of 256

CR回路23およびヒステリシス付きインバータ26を介して所定の時間（たとえば約0．3秒）遅延させられてPLD27に入力される。

【0011】押しボタンスイッチ11からPLD27に入力される信号cはCR回路21およびインバータ24を経ることにより、それが押されてオンになると、ハイ（High）レベルに、オフになるとロー（Low）レベルに、それぞれ変化する。また、角度検出器12からPLD27に入力される信号dは、CR回路22およびインバータ25を経ることにより反転され、角度検出器12が角度検出してオンになるとハイレベルに、オフになるとローレベルになる。さらに、この信号dはCR回路23およびインバータ26を経て遅延された後反転されるため、信号eは、信号dが所定時間ハイレベルを継続したときにローレベルになり、所定時間ローレベルを継続したときにハイレベルになる。

【0012】PLD27には、これらの信号c，d，eに加えて、約2kHzのクロック信号aと、電源投入時にローレベルからハイレベルになるマスターリセット信号bが入力される。これらのクロック信号aおよびマスターリセット信号bは、後述のPLD27内のラッチ回路に入力される。また、このPLD27からの出力信号fはトランジスタ28、29に送られて、ブレーキ解除装置13およびLED14の駆動に用いられる。

【0013】押しボタンスイッチ11を押すと、ブレーキ解除装置13が作動し、ブレーキが解除されて、旋回可能な状態となり、つぎに再び押しボタンスイッチ11を押すとブレーキ解除装置13が停止し、ブレーキがかかった状態となる。そこで、最初に押しボタンスイッチ11を押してブレーキを解除し、手動で検診台を旋回させ、所望の角度にまで旋回できたら、再び押しボタンスイッチ11を押してブレーキがかかった状態としてその角度で固定させる、というのが基本的な動作となる。また、角度検出器12を所定の角度にセットしておけば、上記のように押しボタンスイッチ11を押してブレーキを解除し手動で検診台を旋回させていって、その角度にまで旋回したときに自動的にブレーキの解除が停止してブレーキがかかり、その角度で停止・固定されることになる。

【0014】さらに、このように角度検出器12を所定の角度にセットしたが、旋回途中で気が変わり、その角度を通過させて別の角度で固定したいことになったときは、ブレーキが確実にロックされる前に通過させることができ、そうするとブレーキが解除され、その後任意の角度で押しボタンスイッチ11を再度押せば、上記の基本的な動作と同様にその角度でブレーキをロックさせて固定させることができる。

【0015】また、ブレーキのロック中に、検診台になんらかの力がかかって、角度検出器12がオフになり、そのことによってブレーキが解除され、自由に旋回可能

な状態になるおそれもあるが、遅延信号eを用いることにより、このような場合もブレーキのロックが解除されることがないようにし、検診台の不慮の旋回を防いで安全性を高めている。

【0016】これらを実現するため、PLD27は図2のように構成される。なお、この図2のロジックは、具体的にはPLD27に焼き込むプログラムによって実現する。図2に示すように、AND回路31～38、OR回路41～46、インバータ51～54、およびラッチ回路61～63が備えられる。これらのラッチ回路61～63は、上記の通り、マスターリセット信号bでリセットされて、それらの出力がローレベルにされ、また、クロック信号aの立ち上がり時点で入力信号を読み込んでセットされる。

【0017】つぎに上記の信号a，b，c，d，e，fおよびラッチ回路62、63の出力h，gを表わすタイムチャート（図3～図7）を参照しながら、動作について詳しく説明する。図3～図7において、A～Gは信号a～gの論理レベルをそれぞれ表わす。まず、基本的な動作について図3を参照して説明する。

【0018】（期間71）電源投入後、マスターリセット信号bが図3のBのように立ち上がると、クロック信号aのつぎの立ち上がりでラッチ回路61、62、63がすべてリセットされてそれらの出力f，h，gがローレベルになる。

【0019】（期間72）このとき、押しボタンスイッチ11を押すと、信号cが図3のCのようにハイレベルになるが、上記の通り信号f，gはローレベルだから、それらをインバータ52、53で反転した信号はハイレベルになるため、AND回路31の出力は信号cがハイレベルになることに応じてハイレベルになり、これがOR回路42を経てラッチ回路61に入力される。そこで、クロック信号aのつぎの立ち上がり時点でラッチ回路61がセットされて信号fは図3のFに示すようにハイレベルになる。

【0020】すると、AND回路31の出力はローレベルになるが、押しボタンスイッチ11がオンになっている間は、信号cはハイレベルだから、信号fがハイレベルとなることによりAND回路33の出力がハイレベルとなり（信号gの反転信号はハイレベルだから）、OR回路42を経てこの信号がラッチ回路61の入力に与えられ、クロック信号aの立ち上がりごとにラッチ回路61がセットされ、その出力fはハイレベルに維持される。

【0021】（期間73）押しボタンスイッチ11がオフになり、信号cがローレベルになると、このAND回路33の出力もローレベルになるが、今度はAND回路34の条件が揃ってこのAND回路34の出力がハイレベルになり、OR回路42を通じてラッチ回路61に送られ、ラッチ回路61の出力fはハイレベルを維持す

Ex.1002
CISCO SYSTEMS, INC. / Page 128 of 256

5

る。すなわち、信号ｃがローレベルになることによりインバータ５４の出力がハイレベルとなり、このとき信号ｆはハイレベルで、信号ｄはローレベル、そのインバータ５１を経た信号はハイレベルだから、ＡＮＤ回路３４の出力がハイレベルになるからである。

【００２２】一方、信号ｇが図３のＧに示すようにローレベルで、その反転信号がハイレベルであるから、信号ｃの反転信号がハイレベルになると、ＡＮＤ回路３７の出力がハイレベルとなり、これがＯＲ回路４６を経てラッチ回路６３に送られ、クロック信号の立ち上がりでラッチ回路６３がセットされてその出力ｇがハイレベルとなる。

【００２３】そこで、この期間７３の定常状態で信号ｆがハイレベルになることにより、ブレーキ解除装置１３が作動してブレーキが解除されるとともに、ＬＥＤ１４が点灯する。操作者はこのＬＥＤ１４が点灯したことから旋回可能な状態となっていることを確認し、検診台を手動で回転させることになる。

【００２４】（期間７４）所望の回転角度まで旋回できたら、押しボタンスイッチ１１を再び押す。すると信号ｃがハイレベルになり、インバータ５４の出力がローレベルになるので、ＡＮＤ回路３４の出力がローレベルになる。他のＡＮＤ回路３１、３２、３３の出力もすべてローレベルであるから、クロック信号ａのつぎの立ち上がりでラッチ回路６１はローレベルを取り込み、信号ｆはローレベルになる（図３のＦ）。

【００２５】このとき、インバータ５４の出力がローレベルになることに応じてＡＮＤ回路３７の出力がローレベルになるが、信号ｃはハイレベル、信号ｄの反転信号はハイレベル、信号ｇはハイレベルだから（図３のＣ，Ｄ，Ｇ）、ＡＮＤ回路３８の出力がハイレベルとなり、この信号はＯＲ回路４６を経てラッチ回路６３に送られ、ラッチ回路６３の出力ｇはハイレベルを維持する。

【００２６】（期間７５）押しボタンスイッチ１１がオフになって信号ｃがローレベルになると、ＯＲ回路４４の出力はローレベルになり（信号ｆがこのとき上記の通りローレベルになっているから）ＡＮＤ回路３８の出力はローレベルになる。また、インバータ５４の出力はハイレベルになるが、信号ｆはローレベルだからＡＮＤ回路３７の出力もローレベルとなる。そのため、ＯＲ回路４６の出力がローレベルとなり、ラッチ回路６３は、クロック信号ａのつぎの立ち上がりでローレベルの信号を取り込み、その出力ｇが図３のＧに示すようにローレベルとなる。この期間７５の定常状態は最初の期間７１の状態と同じであり、電源投入後のすべてのラッチ回路６１～６３がリセットされた状態に戻ることになる。

【００２７】つぎに角度検出器１２を所定の角度にセットし、その角度まで手動で検診台を旋回させていって、その角度で停止・固定する場合について図４を参照しながら説明する。この図４で、最初の状態（期間７６）

6

は、図３の期間７１と同じである。また、その後、押しボタンスイッチ１１を押した期間７７、押しボタンスイッチ１１が戻ってオフになった期間７８は、それぞれ図２の期間７２、７３と同様である。すなわち、期間７８では信号ｆ、ｇはハイレベルとなっており、信号ｈはローレベルになっている。

【００２８】（期間７９）検診台が旋回していって角度検出器１２がオンになると、信号ｄが図４のＤに示すようにハイレベルになる。このとき信号ｆはまだハイレベルであるから、ＡＮＤ回路３５の出力がハイレベルとなり、ＯＲ回路４３の出力がハイレベルになって、図４のＨに示すように、ラッチ回路６２の出力ｈがつぎのクロック信号ａの立ち上がりでハイレベルになる。

【００２９】一方、信号ｄがハイレベルになるとインバータ５１の出力はローレベルになり、このときは信号ｈは上記のようにはハイレベルになっていずまだローレベルであるから、ＯＲ回路４１の出力がローレベルとなって、ＡＮＤ回路３４の出力がローレベルになる。期間７８では、期間７３と同じに、ＡＮＤ回路３１～３３の出力はいずれもローレベルであるから、ＡＮＤ回路３４の出力がローレベルになることに応じてＯＲ回路４２の出力はローレベルになり、その結果、ラッチ回路６１の出力ｆは、図４のＦに示すようにつぎのクロック信号ａの立ち上がりでローレベルになる。これによりブレーキが効きはじめるとともにＬＥＤ１４が消灯して、角度検出器１２で検出した角度に、検診台が固定されることになる。

【００３０】信号ｆがローレベルになるとＡＮＤ回路３５の出力はローレベルになるが、このときはすでに上記のように信号ｈがハイレベルになるので、ハイレベルの信号ｄとこのハイレベルの信号ｈとによりＡＮＤ回路３６がハイレベルになり、これがＯＲ回路４３を経てラッチ回路６２に送られ、ラッチ回路６２の出力ｈは信号ｄがハイレベルである限りハイレベルを保つ。

【００３１】信号ｆがローレベルになるとＡＮＤ回路３７の出力はローレベルになる。また、このとき信号ｃはローレベルであるから、信号ｆと信号ｃが入力されるＯＲ回路４４の出力はローレベルになる。そのため、ＡＮＤ回路３８の出力はローレベルになる。その結果、これらＡＮＤ回路３７、３８の出力が送られるＯＲ回路４６の出力がローレベルとなってクロック信号ａのつぎの立ち上がりで、図４のＧに示すように、ラッチ回路６３の出力ｇがローレベルになる。

【００３２】このようにブレーキが効き、検診台が角度検出器１２が検出した角度に固定されているときに、押しボタンスイッチ１１を押したときの動作は図５のようになる。この図５で期間８０は図４の期間７９の続きであって各信号の状態はまったく同じである。

【００３３】（期間８１）ここで押しボタンスイッチ１１を押すと、図５のＣに示すように信号ｃがハイレベル

Ex.1002
CISCO SYSTEMS, INC. / Page 129 of 256

になるが、このときは信号ｆおよび信号ｇはローレベルであるから、ＡＮＤ回路３１の出力がハイレベルになる。そこで、図５のＦに示すように、つぎのクロック信号ａの立ち上がりでラッチ回路６１の出力信号ｆがハイレベルになり、これによってブレーキが解除される。したがって検診台を自由に旋回させることができる状態となる。

【００３４】信号ｆがハイレベルになると、ＡＮＤ回路３１の出力はローレベルになるが、このときは信号ｇはローレベルだからインバータ５４の出力はハイレベルとなり、信号ｃがハイレベルである限り、ＡＮＤ回路３３の出力がハイレベルになる。そのため、信号ｃがハイレベルである間はこのＡＮＤ回路３３の出力によってラッチ回路６１の出力ｆはハイレベルを維持する（図５のＦ）。

【００３５】（期間８２）押しボタンスイッチ１１が復帰してオフになり、信号ｃがローレベルになると、ＡＮＤ回路３３の出力はローレベルになるが、このときは信号ｆ、ｈがともにハイレベルだから、インバータ５４によって信号ｃを反転した出力がハイレベルになることによってＡＮＤ回路３４の出力がハイレベルとなる。そのため、このＡＮＤ回路３４の出力によってラッチ回路６１の出力ｆはハイレベルを維持する（図５のＦ）。

【００３６】また、信号ｃがローレベルになると上記の通りインバータ５４の出力はハイレベルになる。このとき信号ｆはハイレベルであるから、ＡＮＤ回路３７の出力はハイレベルとなり、図５のＧで示すように、ラッチ回路６３の出力ｇはクロック信号ａのつぎの立ち上がりでハイレベルとなる。

【００３７】（期間８３）信号ｆがハイレベルになって旋回可能な状態となり、この状態で検診台を旋回させると、角度検出器１２が角度検出する角度から外れ、信号ｄがローレベルになる。すると、ＡＮＤ回路３５、３６ともその出力がローレベルになるから、ラッチ回路６２の出力ｈは、図５のＨで示すように、クロック信号ａのつぎの立ち上がりでローレベルになる。このとき、信号ｆおよびインバータ５４の出力はともに変わらずにハイレベルであるから、ＡＮＤ回路３７の出力はハイレベルを保ち、結果としてラッチ回路６３の出力ｇは、図５のＧに示すようにハイレベルを維持する。また、インバータ５１の出力は信号ｄがローレベルになることによりハイレベルになるため、信号ｈがローレベルになるにもかかわらず、ＯＲ回路４１の出力はハイレベルを維持する。他方、インバータ５４の出力は上記のように期間８２以降ハイレベルになっており、また信号ｆはハイレベルであるから、ＡＮＤ回路３４の出力はハイレベルを維持し、そのため信号ｆもハイレベルを維持する。

【００３８】ここで、信号ｅは、図５のＥに示すように、信号ｄがローレベルになってから所定の遅延時間の後ハイレベルになるが、この信号ｅはＡＮＤ回路３２に入力されるのみである。このＡＮＤ回路３２には、他に信号ｆをインバータ５２で反転した信号と、信号ｇをインバータ５３で反転した信号とが入力されていて、これらはローレベルとなっている。そのため、信号ｅがハイレベルになってもＡＮＤ回路３２の出力はローレベルで変化することはない。

【００３９】この期間８３において、信号ｄがローレベルになり、遅れて信号ｅがハイレベルになった後の状態は図３の期間７３と同様である。そのため、期間８４において押しボタンスイッチ１１を押し、その後その押しボタンスイッチ１１が復帰したときの期間８５の動作は図３の期間７４および期間７５とまったく変りない。すなわち、所望の角度だけ検診台を旋回できたときに押しボタンスイッチ１１を押すことにより、上記のようにブレーキ解除状態を停止させてブレーキがロックされた状態とし、その角度で検診台を固定させることができる。

【００４０】つぎに、角度検出器１２を所定の角度にセットしたが、旋回途中で気が変わり、その角度を通過させて別の角度で固定したいことになったときの動作について、図６を参照しながら説明する。この図６において、期間８６、８７、８８の動作は、図４の期間７６、７７、７８の動作と同じである。期間８９において信号ｄがハイレベルになり、その後信号ｆ、ｇがローレベルに、信号ｈがハイレベルになることも図４の期間７９と同様である。

【００４１】（期間９０）しかし、この場合は期間８９において信号ｆがローレベルになることによりブレーキ解除が停止するが、ブレーキが確実にロックされる前に、さらに旋回されて角度検出器１２が検出する角度を通過させられてしまい、信号ｄがローレベルになる。このとき、検出角度を通過する時間が十分に短くて信号ｄが図６のＤで示すようにハイレベルとなっている時間が短い場合には、その遅延信号である信号ｅは、図６のＥに示すようにハイレベルからローレベルに反転することなく、ハイレベルを維持する。したがって、信号ｄが短い時間のハイレベルの後ローレベルになる点と信号ｅがハイレベルを維持する点が図４の期間７９と異なることになる。

【００４２】信号ｄがローレベルになると、ＡＮＤ回路３６の出力はローレベルになる。またＡＮＤ回路３５もすでに期間８９において信号ｆがローレベルになることによってローレベルになっている。そのため、ＯＲ回路４３の出力がローレベルになり、ラッチ回路６２の出力ｈは、図６のＨで示すようにクロック信号ａのつぎの立ち上がりでローレベルになる。

【００４３】そして、この信号ｄがローレベルになった時点では、未だ、信号ｈはハイレベル、信号ｇはローレベル、インバータ５３の出力はハイレベルであり、信号ｆはローレベルでインバータ５２の出力はハイレベルである。そのため信号ｄがローレベルに、インバータ５１

12/3/07, EAST Version: 2.1.0.14

Ex.1002
CISCO SYSTEMS, INC. / Page 130 of 256

の出力がハイレベルになると、ＡＮＤ回路３２の出力がハイレベルになり、その結果、ラッチ回路６１の出力ｆは、図６のＦで示すようにクロック信号ａのつぎの立ち上がりでハイレベルになる。

【００４４】信号ｆがハイレベルになると、ＡＮＤ回路３２の出力はローレベルになるが、今度はＡＮＤ回路３４の出力がハイレベルになる。すなわち、信号ｃはローレベルで、インバータ５４の出力はハイレベルであり、ＯＲ回路４１の出力はインバータ５１の出力がハイレベルになった後ハイレベルとなっているため、ＡＮＤ回路３４の出力がハイレベルになる。そこで、図６のＦで示すように信号ｆはハイレベルを維持する。

【００４５】また、信号ｃはローレベルで、インバータ５４の出力はハイレベルであるから、信号ｆがハイレベルとなることにより、ＡＮＤ回路３７の出力がハイレベルになるので、ラッチ回路６３の出力ｇは、図６のＧに示すように、クロック信号ａのつぎの立ち上がりでハイレベルになる。こうして期間９０の定常状態では図３の期間７３の定常状態と同じになり、期間９１において押しボタンスイッチ１１を押し、その後その押しボタンスイッチ１１が復帰したときの期間９２の動作は図３の期間７４および期間７５とまったく変りなく行なわれる。所望の角度だけ検診台を旋回できたときに押しボタンスイッチ１１を押し、上記のようにブレーキ解除状態を停止させてブレーキがロックされた状態とし、その角度で検診台を固定させることができる。

【００４６】ブレーキのロック中に、検診台になんらかの強い力がかかって検出角度から外れた場合は図７のようになる。図７において、期間９３、９４、９５、９６は図４の期間７６、７７、７８、７９のそれぞれとまったく同じである。すなわち、期間９６では角度検出器１２が検診台がセットされた角度にあることを検出しており、信号ｄがハイレベルになり、信号ｆがローレベルになってブレーキがロックされている。また、この期間９３、９４、９５は、図６の期間８６、８７、８８と同じである。図７の期間９６で信号ｄがハイレベルになっている時間が長いので、信号ｅが遅れてローレベルになっている。このことは図４の期間７９と同じである。これに対して、図６の期間８９で信号ｄがハイレベルになっている時間は短いので信号ｅはそのままハイレベルを維持している。

【００４７】（期間９７）このとき、検診台がそのブレーキにもかかわらず外力で旋回させられたとする。すると、検診台が角度検出器１２の検出角度から外れるため信号ｄは図７のＤに示すようにローレベルになる。すると、ＡＮＤ回路３６の出力はローレベルになる。他方、ＡＮＤ回路３５は、信号ｆがローレベルだから信号ｄのいかんにかかわらずローレベルになっている。そのため、ＯＲ回路４３の出力はローレベルになり、ラッチ回路６２の出力ｈは、図７のＨに示すように、クロック信号ａのつぎの立ち上がりでローレベルになる。

【００４８】このとき信号ｅは、図６の期間８９でハイレベルになっているのとは異なり、図４の期間７９と同様に期間９６でローレベルになっているので、ＡＮＤ回路３２の出力がハイレベルになることはない。そのため、信号ｆはローレベルを維持し、ブレーキが解除されることはない。その後、信号ｅは図７のＥに示すように遅れてハイレベルになるが、図６の期間９０とは異なり、信号ｆがハイレベルにならないので、出力ｇはハイレベルにならない。このように、検診台が外力で少し旋回したとしてもそのままブレーキが効いた状態を維持する。これによりブレーキが解除され検診台が自由に回転して不測の事故につながることが防止できる。なお、この期間９７の定常状態は、図３の期間７５や図５の期間８５、図６の期間９２と同じである。つまり図３の期間７１、図４の期間７６、図５の期間８０、図６の期間８６、図７の期間９３と同じになって最初の状態に戻ることになる。

【００４９】このように図６の動作と図７の動作とを比較することにより、信号ｄがある程度の時間的長さ持続しないと変化しない信号ｅを利用することによって、角度検出器１２を所定の角度にセットしたが、旋回途中で気が変わり、その角度を通過させて別の角度で固定したいことになったときは、ブレーキが確実にロックされる前に通過させることができるようにすることと、ブレーキのロック中に検診台になんらかの力がかかって検診台が旋回し角度検出信号がなくなりブレーキが解除されて自由に旋回可能な状態になり事故につながるということを防止することとを同時に達成することができることがわかる。

【００５０】なお、上記の説明はこの発明の実施の形態に関する一つの例についてのものであり、図１の制御基板２０上の構成や、図２で示すＰＬＤ２７内のロジックの構成などは他に種々に構成できることはもちろんである。

【００５１】

【発明の効果】以上説明したように、この発明によれば、便利かつ安全な、旋回機能付き検診台を得ることができる。すなわち、任意の角度に旋回させて固定することができるとともに、指定したある角度まで旋回させていってその指定角度で旋回を止めて、そこで検診台を確実に固定することができる。また、指定角度まで旋回させていく途中で、その角度を通過させて別の角度としたい場合には、そのまま旋回させるだけでその指定角度を通過させることができ、任意の角度で固定することができる。さらに、ブレーキにより固定されているときにそれを上回る力で旋回させられてもブレーキが解除することがなく、不慮の旋回による事故を防止でき、安全性が高められる。

【図面の簡単な説明】

Ex.1002
CISCO SYSTEMS, INC. / Page 131 of 256

【図1】この発明にかかる検診台の制御部を示すブロック図。
【図2】図1のPLD27内のロジックを示すブロック図。
【図3】押しボタンスイッチ操作によるブレーキ制御の動作を示すタイムチャート。
【図4】角度検出器によるブレーキ制御の動作を示すタイムチャート。
【図5】角度検出器によるブレーキロックから解除させる動作を示すタイムチャート。
【図6】指定角度を通過させる場合の動作を示すタイムチャート。
【図7】角度検出器によるブレーキロック時に外力で旋回した場合の動作を示すタイムチャート。
【符号の説明】

11	押しボタンスイッチ
12	角度検出器
13	ブレーキ解除装置
14	LED
20	制御基板
21～23	CR回路
24～26	ヒステリシス付きインバータ
27	PLD
28、29	ドライバ用トランジスタ
31～38	AND回路
41～46	OR回路
51～54	インバータ
61～63	ラッチ回路

【図1】

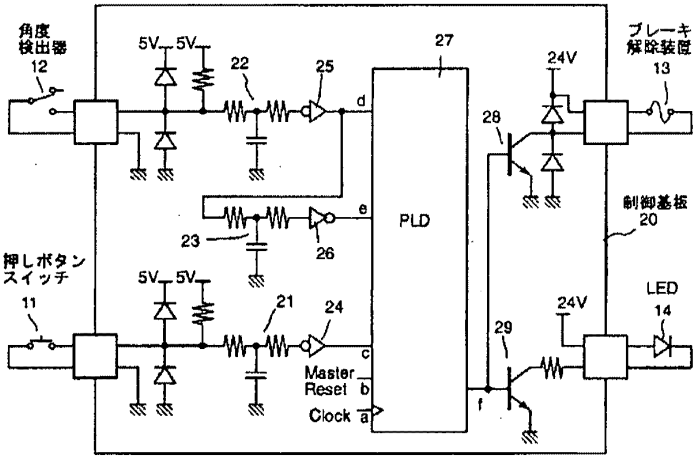

Ex.1002
CISCO SYSTEMS, INC. / Page 132 of 256

【図2】

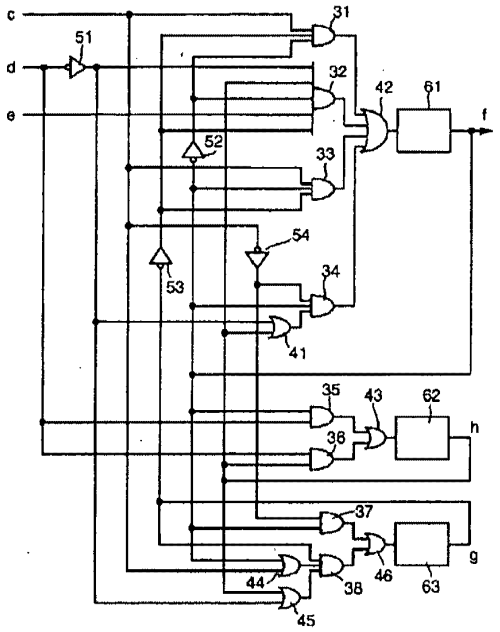

【図3】

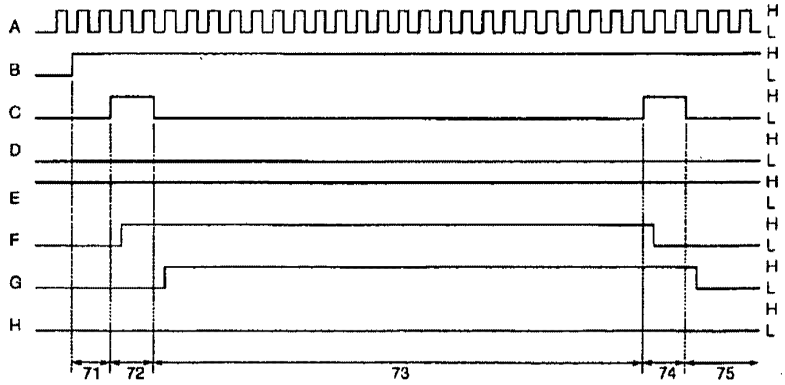

Ex.1002
CISCO SYSTEMS, INC. / Page 133 of 256

【図4】

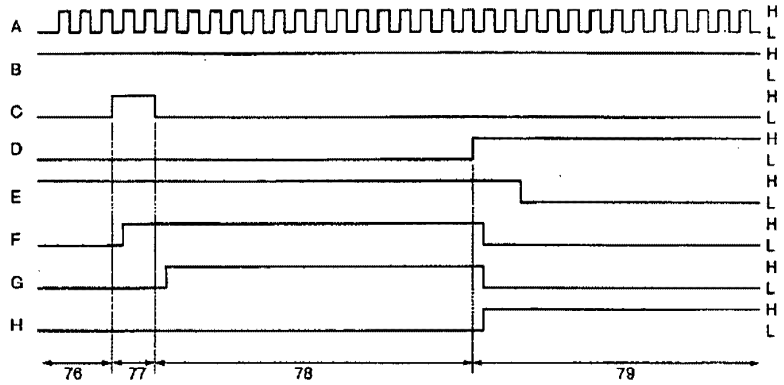

【図5】

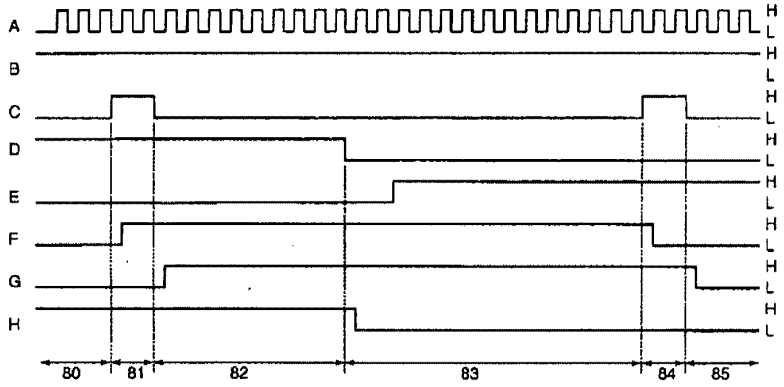

【図6】

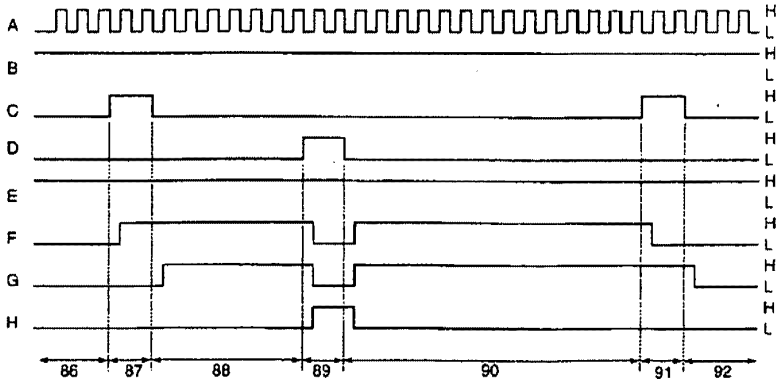

Ex.1002
CISCO SYSTEMS, INC. / Page 134 of 256

【図7】

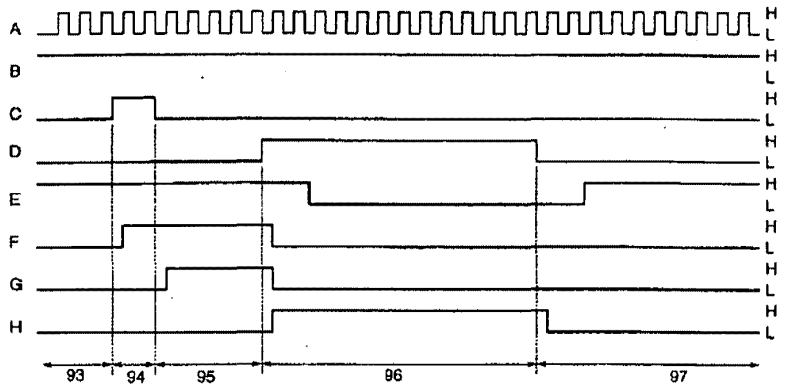

PAT-NO: JP409117448A

DOCUMENT-IDENTIFIER: JP **09117448** A

TITLE: EXAMINATION TABLE

PUBN-DATE: May 6, 1997

INVENTOR-INFORMATION:
NAME
TAKEUCHI, HIROYUKI

ASSIGNEE-INFORMATION:

NAME	COUNTRY
SHIMADZU CORP	N/A

APPL-NO: JP07302043

APPL-DATE: October 26, 1995

INT-CL (IPC): A61B006/04

ABSTRACT:

PROBLEM TO BE SOLVED: To provide an examination table having a rotating function and being safe and convenient.

SOLUTION: This examination table is composed of a button switch 11 for rotating the table, an angle detector 12 which closes when the table is inclined at a given angle, a CR circuit 23 for obtaining a signal (e) delaying an angle detecting signal (d), an inverter 26 with a hysteresis, a brake releasing apparatus 13 for releasing a brake, and a programmable logic device(PLD) 27 which, when the signal (c) from the switch 11, the angle detecting signal (d) and its delayed signal (e) are inputted, operates the brake releasing apparatus 13 by generating a brake releasing signal (f) on the

basis of a given logic built therein.

COPYRIGHT: (C)1997,JPO

04-11-11

Attorney Docket No.: 802-001C

IN THE UNITED STATES PATENT AND TRADEMARK OFFICE

In Re Application of:	)	
	)	
Krumel	)	
	)	Art Unit: 2134
Serial No.: 12/807,641	)	
	)	
Filed: September 10, 2010	)	Examiner: Simitoski
	)	
For: Real Time Firewall/Data Protection Systems and Methods	)	
	)	

INFORMATION DISCLOSURE STATEMENT

Commissioner for Patents
P.O. Box 1450
Alexandria, VA 22313-1450

Sir:

1. Pursuant to 37 C.F.R. 1.97 and 1.98, and in compliance with 37 C.F.R. 1.56, the Office's attention is directed to the patents, publications and other information listed on the attached PTO-1449. A copy of each listed document is enclosed except for: (a) pending applications or (b) those previously cited or submitted to the Office in the following application(s) upon which this application relies for an earlier filing date under 35 U.S.C. 120:

Serial No.: 09/611,775 (now USP 7,013,482) Filing Date: July 7, 2000

Serial No.: 11/374,465 Filing Date: March 13, 2006

Regarding the document(s), publication(s) or other information listed on the attached PTO-1449, Applicant(s) believe(s) the same may qualify as "prior" art to this application and should be treated accordingly, although Applicant(s) reserve(s) the right to contest the prior art status of any document, publication or information cited herein.

2. Regarding each listed document that is not in the English language, an English-language translation accompanies this Statement as indicated on the attached PTO-1449 or a concise explanation of the relevance of the document is set forth in the following documents(s):

(a) ___ Copy of each English language version of a search report indicating the degree of relevance found by the foreign office of each document being submitted from the search report.

(b) ___ Attachment entitled "Concise Explanation of Relevance of Non-English Language Documents."

3. Pursuant to 37 C.F.R. 1.97(b) this Statement is being filed (one must be checked):

(a) ___ Within 3 months of the filing date or date of entry into the National Stage.

(b) _X_ Before the mailing date of a first Office Action on the merits. If this Statement is not filed before the mailing date of a first Office Action on the merits, the required certification is given below or, in the absence thereof, the Office is authorized to charge the required fee set forth in 37 C.F.R. 1.17(p) to Deposit Account No. 50-0251 for consideration of this Statement.

(c) ___ After the period set forth in 37 C.F.R. 1.97(b) but before the mailing date of either a final action or a notice of allowance.

(1) ___ The required certification is given below, or

(2) ___ Enclosed is a check covering the fee set forth in 37 C.F.R. 1.17(p) for consideration of this Statement, or

(3) ___ Charge the fee set forth in 37 C.F.R. 1.17(p) to Deposit Account No. 50-0251

(d) ___ After the mailing date of either a final action or a notice of allowance, but before payment of the issue fee. Petition hereby is made for consideration of this Statement and the required certification is indicated below.

(1) ___ Enclosed is a check covering the fee set forth in 37 C.F.R. 1.17(i)(1), or

(2) ___ Charge the fee set forth in 37 C.F.R. 1.17(i)(1) to Deposit Account No. 50-0251.

4. Certification (if applicable)

(a) ___ The undersigned hereby certifies that each item of information contained in this Statement was cited in a communication from a foreign patent

Ex.1002
CISCO SYSTEMS, INC. / Page 139 of 256

office in a counterpart foreign application not more than 3 months prior to the filing of this Statement.

(b) __ The undersigned hereby certifies that no item of information contained in this Statement was cited in a communication from a foreign patent office in a counterpart foreign application or, to the undersigned's knowledge after making reasonable inquiry, was known to any individual designated in 37 C.F.R. 1.56(c) more than 3 months prior to the filing of this Statement.

5. The Commissioner is hereby authorized to charge any additional fees or credit any overpayment to Deposit Account No. 50-0251.

Respectfully submitted

Alan R. Loudermilk
Registration No. 32,788
Attorney for Applicant(s)

April 4, 2011
Loudermilk & Associates
511 N. Washington Avenue
Marshall, Texas 75670
903-407-4213

I hereby certify that the foregoing is being deposited with the US postal service, postal prepaid, or faxed, to Commissioner for Patents, P.O. Box 1450, Alexandria, VA 22313-1450, on the date indicated above.

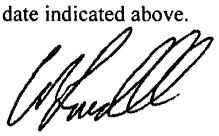

OPAP IAP1
MAR 2 4 2011
PATENT & TRADEMARK OFFICE

Attorney Docket No.: 802-001C

IN THE UNITED STATES PATENT AND TRADEMARK OFFICE

In Re Application of: Krumel	)	
Serial No.: 12/807,641	)	
Filed: September 10, 2010	)	Examiner:
For: REAL TIME FIREWALL/DATA PROTECTION SYSTEMS AND METHODS	)	Group Art Unit:

Mail Stop Missing Parts
Commissioner for Patents
P.O. Box 1450
Alexandria, VA 22313-1450

RESPONSE TO NOTICE TO FILE MISSING PARTS AND REQUEST TO CHARGE DEPOSIT ACCOUNT FOR PAYMENT OF FILING FEES AND SURCHARGE

Sir:

In response to the notice to file missing parts mailed October 20, 2010 (copy attached), Applicant hereby requests that Deposit Account No. 50-0251 be charged $870.00 in payment of the filing fee, search fee, examination fee and surcharge. Please note the preliminary amendment accompanying this submission, which cancels claims 1-66 and adds new claims 67-96, and thus the extra claims fee should be $260.00. Applicant is a small entity. Applicant also is submitting herewith another copy of the declaration filed in the original parent application.

Please charge any additional fees due, or credit any overpayment, to Deposit Account No. 50-0251.

Respectfully submitted,

Alan R. Loudermilk
Registration No. 32,788
Attorney for Applicant(s)

March 21, 2011
Loudermilk & Associates
511 N. Washington Avenue
Marshall, Texas 75670
903-407-4213

I hereby certify that the foregoing is being deposited with the US postal service, postal prepaid, or faxed, to Mail Stop Missing Parts, Commissioner for Patents, P.O. Box 1450, Alexandria, VA 22313-1450, on the date indicated above.

OPAP IAP1
MAR 24 2011
PATENT & TRADEMARK OFFICE

Attorney Docket No.: 802-001C

IN THE UNITED STATES PATENT AND TRADEMARK OFFICE

In Re Application of: Krumel	)	
	)	
Serial No.: 12/807,641	)	
	)	
Filed: September 10, 2010	)	Examiner:
	)	
For: REAL TIME FIREWALL/DATA PROTECTION SYSTEMS AND METHODS	)	Group Art Unit:

Mail Stop Missing Parts
Commissioner for Patents
P.O. Box 1450
Alexandria, VA 22313-1450

PETITION AND FEE FOR EXTENSION OF TIME UNDER 37 C.F.R. 1.136(a)

Dear Commissioner,

Applicant hereby petitions for a three-month extension of time in order to respond to the notice of missing parts mailed October 20, 2010. Please charge Deposit Account No. 50-0251 in the amount of $555.00 for the extension fee. A response to the notice accompanies this submission.

Please charge any additional fees due, or credit any overpayment, to Deposit Account No. 50-0251.

Respectfully submitted

Alan R. Loudermilk
Registration No. 32,788
Attorney for Applicant(s)

March 21, 2011

Loudermilk & Associates
511 N. Washington Avenue
Marshall, Texas 75670
903-407-4213

03/25/2011 JADD01 00000034 500251 12807641
07 FC:2253 555.00 DA

I hereby certify that the foregoing is being deposited with the US postal service, postal prepaid, or faxed, to Mail Stop Missing Parts, Commissioner for Patents, P.O. Box 1450, Alexandria, VA 22313-1450, on the date indicated above.

Attorney Docket No.: 802-001C

IN THE UNITED STATES PATENT AND TRADEMARK OFFICE

In Re Application of: Krumel	)	
Serial No.: 12/807,641	)	
Filed: September 10, 2010	)	Examiner:
For: REAL TIME FIREWALL/DATA PROTECTION SYSTEMS AND METHODS	)	Group Art Unit:

Mail Stop Missing Parts
Commissioner for Patents
P.O. Box 1450
Alexandria, VA 22313-1450

PETITION FOR DATE OF DEPOSIT FOR DRAWING AND STATEMENT IN SUPPORT OF SAME

Sir:

In response to the notice to file missing parts mailed October 20, 2010, Applicant hereby petitions for the date of deposit of Fig. 5 as the date of filing this application. In support thereof, Applicant states as follows.

Applicant has reviewed the file for this application and submits the following.

Attached is a copy of the application transmittal for this application, which includes the submission of 14 sheets of formal drawings. This would include Fig. 5 as one of the 14 sheets.

At the time of filing the application, Applicant submitted a return postcard that requested that the USPTO acknowledge receipt of the submission, including "Formal Drawings (14 sheets)". This would include Fig. 5. Attached is a copy of the return postcard received from the USPTO acknowledging such receipt.

Applicant also submits a copy of the 14 sheets of formal drawings included in the file for this application, which includes Fig. 5.

Accordingly, Applicant respectfully requests that this petition be granted, and that the application be processed, with Fig. 5 included as part of the application as filed. Applicant also notes that the ultimate parent of this application resulted in USP 7,013,482, which also included Fig. 5. Further, the application transmittal for this application incorporated by reference parent

03/25/2011 JADD01 00000034 500251 12807641
06 FC:1462 400.00 DA

U.S. App. Ser. No. 11/374,465, which also included Fig. 5. Fig. 5 also is discussed in detail in the specification as filed.

Please charge Deposit Account No. 50-0251 in the amount of $400.00 for this petition. Application requests that this petition be granted and the petition fee refunded.

Please charge any additional fees due, or credit any overpayment, to Deposit Account No. 50-0251.

The undersigned declares that all statements made herein of my own knowledge are true and that all statements made on information and belief are believed to be true, and further that these statements were made with the knowledge that willful false statements and the like so made are punishable by fine or imprisonment, or both, under Section 1001 of Title 18 of the United States Code, and that such willful false statements may jeopardize the validity of the application or any patent issuing thereon.

Respectfully submitted,

Alan R. Loudermilk
Registration No. 32,788
Attorney for Applicant(s)

March 21, 2011
Loudermilk & Associates
511 N. Washington Avenue
Marshall, Texas 75670
903-407-4213

I hereby certify that the foregoing is being deposited with the US postal service, postal prepaid, or faxed, to Mail Stop Missing Parts, Commissioner for Patents, P.O. Box 1450, Alexandria, VA 22313-1450, on the date indicated above.

OPAP IAP1 MAR 2 4 2011 PATENT & TRADEMARK OFFICE

UNITED STATES PATENT AND TRADEMARK OFFICE

UNITED STATES DEPARTMENT OF COMMERCE
United States Patent and Trademark Office
Address: COMMISSIONER FOR PATENTS
P.O. Box 1450
Alexandria, Virginia 22313-1450
www.uspto.gov

APPLICATION NUMBER	FILING OR 371(C) DATE	FIRST NAMED APPLICANT	ATTY. DOCKET NO./TITLE
12/807,641	09/10/2010	Andrew K. Krumel	802-001C

CONFIRMATION NO. 3474

Loudermilk & Associates
Suite B
10950 N. Blaney Avenue
Cupertino, CA 95014

FORMALITIES LETTER

OC000000044025811

Date Mailed: 10/20/2010

03/25/2011 JADD01 00000034 500251 12807641

01 FC:2011 165.00 DA
02 FC:2111 270.00 DA
03 FC:2301 [illegible] DA
04 FC:2202 260.00 DA
05 FC:2051 65.00 DA

NOTICE TO FILE MISSING PARTS OF NONPROVISIONAL APPLICATION

FILED UNDER 37 CFR 1.53(b)

Filing Date Granted

Items Required To Avoid Abandonment:

An application number and filing date have been accorded to this application. The item(s) indicated below, however, are missing. Applicant is given **TWO MONTHS** from the date of this Notice within which to file all required items and pay any fees required below to avoid abandonment. Extensions of time may be obtained by filing a petition accompanied by the extension fee under the provisions of 37 CFR 1.136(a).

- The statutory basic filing fee is missing.
  Applicant must submit $165 to complete the basic filing fee for a small entity.
- The oath or declaration is unsigned.

The following item(s) appear to have been **omitted** from the application:

- Figure(s) **5** described in the specification.

Applicant must reply to this notice within the time period set forth in this notice to avoid abandonment of this application. Applicant must select one of the three following options and the reply must comply with the requirements set forth in the selected option and any other requirements set forth in this notice. The reply should also indicate which option applicant has selected.

I. **Petition for date of deposit:** Should applicant contend that the above-noted omitted item(s) was in fact deposited in the U.S. Patent and Trademark Office (USPTO) with the nonprovisional application papers, a copy of this Notice and a petition (and $400.00 petition fee *(37 CFR 1.17(f))*) with evidence of such deposit **must** be filed within **TWO MONTHS** of the date of this Notice. The petition fee will be refunded if it is determined that the item(s) was received by the USPTO. **THIS TWO MONTH PERIOD IS EXTENDABLE UNDER 37 CFR 1.136(a) or (b).**

II. **Petition for later filing date:** Should applicant desire to supply the omitted item(s) and accept the date that such omitted item(s) was filed in the USPTO as the filing date of the above-identified application, a copy of this Notice, the omitted item(s) (with a supplemental oath or declaration in compliance with 37 CFR 1.63 and 1.64 referring to such items), and a petition under 37 CFR 1.182 (with the $400.00 petition fee *(37 CFR 1.17(f))* requesting the later filing date **must** be filed within **TWO MONTHS** of the date of this Notice. **THIS TWO MONTH PERIOD IS EXTENDABLE UNDER 37 CFR 1.136(a) or (b).**
Applicant is advised that generally the filing fee required for an application is the filing fee in effect on the filing date accorded the application and that payment of the requisite basic filing fee on a date later than the filing date

of the application requires payment of a surcharge (37 CFR 1.16(f)). To avoid processing delays and payment of a surcharge, applicant should submit any balance due for the requisite filing fee based on the later filing date being requested when submitting the omitted item(s) and the petition (and petition fee) requesting the later filing date.

III. **Acceptance of application as deposited:** Applicant may accept the application as deposited in the USPTO by filing an appropriate amendment as set forth in either (A) or (B) below within **TWO MONTHS** of the date of this Notice. **THIS TWO MONTH PERIOD IS EXTENDABLE UNDER 37 CFR 1.136(a) or (b)** . The application will maintain a filing date as of the date of deposit of the application papers in the USPTO, and original application papers (i.e., the original disclosure of the invention) will include only those application papers present in the USPTO on the date of deposit. A petition is not required for this option.

(A) If applicant wants to accept the application as deposited without adding the subject matter that was in the omitted item (e.g., a missing page or figure), applicant is required to submit one or more of the following items without adding any new matter (see 35 U.S.C. 132(a)):

1. For a missing page of the specification,
   a) a substitute specification including claims that amends the specification to renumber the pages consecutively and cancels any incomplete sentences, and
   b) a statement that the substitute specification includes no new matter, in compliance with 37 CFR 1.121(b)(3) and 1.125;
2. For a missing figure of the drawings,
   a) replacement drawing sheets in compliance with 37 CFR 1.121(d) to renumber the drawing figures consecutively (if necessary),
   b) a substitute specification excluding claims that amends the specification to cancel any references to any omitted drawing(s) and corrects the references in the specification to the drawing figures to correspond with any relabeled drawing figures, and
   c) a statement that the substitute specification includes no new matter, in compliance with 37 CFR 1.121(b)(3) and 1.125;
3. For a missing page of the claim listing only, a replacement claim listing with the claims renumbered consecutively or, if amendment to the claims is also necessary, then a complete claim listing in compliance with 37 CFR 1.121(c);
4. For a missing or unreadable compact disc,
   a) a substitute specification (excluding the claims) deleting the reference to the compact disc and the files contained on the compact disc, and
   b) a statement that the substitute specification includes no new matter, in compliance with 37 CFR 1.121(b)(3) and 1.125; and
5. For a missing or unreadable file submitted on a compact disc,
   a) a substitute specification (excluding the claims) deleting the reference to the missing or unreadable file, and a statement that the substitute specification includes no new matter, in compliance with 37 CFR 1.121(b)(3) and 1.125; and
   b) a replacement transmittal letter listing all of the files except the missing or unreadable file in compliance with 37 CFR 1.52(e)(3)(ii).

(B) Alternatively, if applicant wants to accept the application as deposited but wishes to add the subject matter in the omitted item (e.g., a missing page or figure) by relying on an incorporation by reference under 37 CFR 1.57 or other portions of the original disclosure, applicant is required to submit one or more of the following items without adding any new matter (see 35 U.S.C. 132(a)):

1. To add the subject matter in a missing page of specification,
   a) a substitute specification excluding claims and
   b) a statement that the substitute specification includes no new matter, in compliance with 37 CFR 1.121(b)(3) and 1.125;
2. To add a missing figure of the drawings, new and replacement drawing sheets in compliance with 37 CFR 1.121(d);

3. To add the subject matter in a missing page of the claim listing, a complete claim listing in compliance with 37 CFR 1.121(c) (e.g., a claim in the missing page should be submitted as a new claim);
4. To add the subject matter in a missing or unreadable compact disc,
   a) a replacement compact disc and a duplicate copy of the compact disc, in compliance with 37 CFR 1.52(e); and
   b) a statement that the replacement compact disc contains no new matter in compliance with 37 CFR 1.52(e)(4); and,
5. To add the subject matter in a missing or unreadable file submitted on a compact disc,
   a) a replacement compact disc that contains all of the files listed in the specification including the missing or unreadable file and a duplicate copy of the compact disc, in compliance with 37 CFR 1.52(e); and
   b) a statement that the replacement compact disc contains no new matter in compliance with 37 CFR 1.52(e)(4).

If applicant is relying on an incorporation by reference under 37 CFR 1.57 to add the omitted subject matter, then applicant must also comply with the requirements of 37 CFR 1.57.

Applicant is cautioned that correction of the above items may cause the specification and drawings page count to exceed 100 pages. If the specification and drawings exceed 100 pages, applicant will need to submit the required application size fee.

The applicant needs to satisfy supplemental fees problems indicated below.

The required item(s) identified below must be timely submitted to avoid abandonment:

- Additional claim fees of **$1196** as a small entity, including any required multiple dependent claim fee, are required. Applicant must submit the additional claim fees or cancel the additional claims for which fees are due.
- To avoid abandonment, a surcharge (for late submission of filing fee, search fee, examination fee or oath or declaration) as set forth in 37 CFR 1.16(f) of **$65** for a small entity in compliance with 37 CFR 1.27, must be submitted with the missing items identified in this notice.

SUMMARY OF FEES DUE:

Total additional fee(s) required for this application is **$1806** for a small entity
- **$165** Statutory basic filing fee.
- **$65** Surcharge.
- The application search fee has not been paid. Applicant must submit **$270** to complete the search fee.
- The application examination fee has not been paid. Applicant must submit **$110** to complete the examination fee for a small entity in compliance with 37 CFR 1.27.
- Total additional claim fee(s) for this application is **$1196**
  - **$1196** for **46** total claims over 20.

Replies should be mailed to:

Mail Stop Missing Parts
Commissioner for Patents
P.O. Box 1450
Alexandria VA 22313-1450

Registered users of EFS-Web may alternatively submit their reply to this notice via EFS-Web.
https://sportal.uspto.gov/authenticate/AuthenticateUserLocalEPF.html

For more information about EFS-Web please call the USPTO Electronic Business Center at **1-866-217-9197** or visit our website at http://www.uspto.gov/ebc.

If you are not using EFS-Web to submit your reply, you must include a copy of this notice.

/ldvan/

Office of Data Management, Application Assistance Unit (571) 272-4000, or (571) 272-4200, or 1-888-786-0101

OPAP IAP1
MAR 2 4 2011
PATENT & TRADEMARK OFFICE

Attorney Docket No.: 802-001

DECLARATION AND POWER OF ATTORNEY

As a below named inventor, I hereby declare that:

INVENTOR AND SPECIFICATION IDENTIFICATION

My residence, post office address and citizenship are as stated below next to my name. I believe that I am the original, first and sole inventor (*if only one name is listed below*) or an original, first and joint inventor (*if plural names are listed below*) of the subject matter which is claimed and for which a patent is sought on the invention entitled:

REAL TIME FIREWALL/DATA PROTECTION SYSTEMS AND METHODS
TITLE OF INVENTION

the specification of which:

_X_ is attached hereto.

___ was filed on _____ as Application Serial No. _____
and was amended on _____ (*if applicable*).

___ was described and claimed in PCT International Application No._____filed on
_____and amended under PCT Article 19 on _____ (*if any*).

REVIEW OF PAPERS AND ACKNOWLEDGMENT OF DUTY OF CANDOR

I hereby state that I have reviewed and understand the contents of the above identified specification, including the claims, as amended by any amendment referred to above.

I do not know and do not believe that the invention claimed in the above-identified specification was ever known or used in the United States of America before my or our invention thereof, or patented or described in any printed publication in any country before my or our invention thereof or more than one year prior to this application, and that the same was not in public use or on sale in the United States of America more than one year prior to this application.

I acknowledge the duty to disclose to the Patent and Trademark Office information which I know is material to the patentability of this application in accordance with Title 37, Code of Federal Regulations, § 1.56.

FOREIGN APPLICATIONS AND PRIORITY CLAIM

The invention claimed in the above-described specification has not been patented or made the subject of an inventor's certificate issued before the date of this application in any country foreign to the United States of America on an application filed by me or my legal representatives or assigns more than twelve months prior to this application. I hereby claim foreign priority benefits under Title 35, United States Code, § 119 of any foreign application(s) for patent or inventor's certificate or of any PCT international application(s) designating at least one country other than the United States of America listed below and have also identified below any foreign application(s) for patent or inventor's certificate or any PCT international application(s) designating at least

BEST AVAILABLE COPY

one country other than the United States of America filed by me on the same subject matter having a filing date before that of the application(s) of which priority is claimed.

COUNTRY	APPLICATION NUMBER	DATE OF FILING (day, month, year)	PRIORITY CLAIMED UNDER 37 USC 119
			__Yes __No
			__Yes __No
			__Yes __No
			__Yes __No

DOMESTIC PRIORITY CLAIM

I hereby claim the benefit under Title 35, United States Code, § 120 of any United States patent application(s) listed below and, insofar as this application discloses or claims subject matter in addition to that disclosed in the below listed priority applications, I acknowledge the duty to disclose to the Patent and Trademark Office all information known by me to be material to patentability as defined in Title 37, Code of Federal Regulations, § 1.56 which became available between the filing date(s) of the below-listed prior application(s) and the national or PCT international filing date of this application.

(APPLICATION SERIAL NO.) (FILING DATE) (STATUS: PATENTED, PENDING, ABANDONED)

(APPLICATION SERIAL NO.) (FILING DATE) (STATUS: PATENTED, PENDING, ABANDONED)

POWER OF ATTORNEY

I hereby appoint Alan R. Loudermilk (Reg. No. 32,788), who is registered to practice before the Patent and Trademark Office, as my attorney with full power of substitution and revocation, to prosecute this application, to make alterations or amendments therein, to receive the patent and transact all business in the Patent and Trademark Office connected therewith.

All **CORRESPONDENCE** should be addressed to:

Loudermilk & Associates
10950 N. Blaney Avenue Suite B
Cupertino, CA 95014

All **TELEPHONE INQUIRIES** may be directed to Alan R. Loudermilk at (408) 342-1866.

BEST AVAILABLE COPY

I hereby declare I have read this Declaration, and that all statements made herein of my own knowledge are true and that all statements made on information and belief are believed to be true; and further that these statements were made with the knowledge that willful false statements and the like so made are punishable by fine or imprisonment, or both, under Section 1001 of Title 18 of the United States Code, and that such willful false statements may jeopardize the validity of the application or any patent issued thereon.

HAND PRINT DATE BEFORE SIGNING

Full name of sole or first joint inventor ANDREW K. KRUMEL Citizenship USA

Inventor's signature _____ Date 7/7/97

Residence 3635 Pleasant Knoll Drive, San Jose, CA 95148

Post Office Address 3635 Pleasant Knoll Drive, San Jose, CA 95148

Full name of second joint inventor _____ Citizenship _____

Inventor's signature _____ Date _____

Residence

Post Office Address _____

Full name of third joint inventor _____ Citizenship _____

Inventor's signature Date

Residence _____

Post Office Address _____

Full name of fourth joint inventor _____ Citizenship _____

Inventor's signature _____ Date _____

Residence

Post Office Address _____

Full name of fifth joint inventor _____ Citizenship _____

Inventor's signature _____ Date _____

Residence _____

Post Office Address _____

____ If this line is checked, the signature page is continued on the attached Addendum.

BEST AVAILABLE COPY

OPAP IAP1
MAR 24 2011
PATENT & TRADEMARK OFFICE

Attorney Docket No.: 802-001C

IN THE UNITED STATES PATENT AND TRADEMARK OFFICE

In Re Application of: Krumel	)	
	)	
Serial No.: 12/807,641	)	
	)	
Filed: September 10, 2010	)	Examiner:
	)	
For: REAL TIME FIREWALL/DATA PROTECTION SYSTEMS AND METHODS	)	Group Art Unit:

Mail Stop Missing Parts
Commissioner for Patents
P.O. Box 1450
Alexandria, VA 22313-1450

PRELIMINARY AMENDMENT

Sir:

Prior to examination of the above-identified application, please amend this application as follows.

IN THE CLAIMS:

1 – 66. (canceled)

67. (new) A method for communicating data between an external computing system and an internal computing system over a packet-based network, wherein data is transmitted and received in the form of a plurality of packets, the method comprising the steps of:

receiving a packet from the external computing system over the network, the packet having at least a first portion and an end portion, and transmitting the packet to the internal computing system;

in parallel with the step of receiving and transmitting the packet, determining characteristics of the packet from the first portion;

in parallel with the step of receiving and transmitting the packet, performing one or more checks on the packet;

in parallel with the step of receiving and transmitting the packet, determining if the packet should be a valid packet or an invalid packet based on the one or more checks, wherein the packet is analyzed in real time to determine if the packet should be valid or invalid while the packet is being concurrently transmitted to the internal computing system.; and

after receiving the end portion of the packet, selectively altering the end portion of the packet based on whether the packet has been determined to be a valid packet or an invalid packet, wherein the packet is selectively altered to be invalid if it was determined that the packet should be an invalid packet.

68. (new) The method of claim 67, wherein the packet is selectively altered to be invalid if a determination has not been made as to whether the packet is valid or invalid by the time the end portion of the packet is received.

69. (new) The method of claim 67, wherein the packet is analyzed to determine if the

packet is valid without the packet having been completely received and buffered.

70. (new) The method of claim 67, wherein the packet is determined to be an invalid packet if it is determined that the packet contains a virus, is unauthorized or presents a risk of harm to the internal computing system.

71. (new) The method of claim 67, wherein the one or more checks are at least in part selectively performed based on a state of a physical switch.

72. (new) The method of claim 71, wherein the physical switch comprises one or more user-controlled switches, wherein the one or more checks are selectively performed based on a user-defined state of the one or more user-controlled switches.

73. (new) The method of claim 72, wherein the one or more user-controlled switches comprise at least one user-controlled switch that controls a configuration or reconfiguration of a circuit that performs the one or more checks.

74. (new) The method of claim 73, wherein the configuration or reconfiguration of the circuit that performs the one or more checks is performed without requiring user entry of configuration commands via software running on the internal computing system.

75. (new) The method of claim 73, wherein the circuit that performs the one or more checks is configured or reconfigured based on commands from the internal computing system and based on a state of the at least one user-controlled switch.

76. (new) The method of claim 71, wherein at least a subset of the one or more checks are selectively enabled or disabled based on the user-defined state of the user-controlled switches.

77. (new) The method of claim 67, wherein the one or more checks are performed with a programmable logic device, wherein logic within the programmable logic device is selectively

programmed to perform the one or more checks in parallel with the receiving and transmitting of the packet.

78. (new) The method of claim 77, wherein a first physical interface circuit receives the packet from the network, wherein the packet is coupled to the programmable logic device, wherein the packet is coupled from the programmable logic device to a second physical interface circuit for transmission to the internal computing system.

79. (new) The method of claim 78, wherein the programmable logic device performs the one or more checks while the packet is being coupled from the first physical interface to the second physical interface.

80. (new) The method of claim 67, wherein the one or more checks are selectively performed based on a communication state between the external computing system and the internal computing system.

81. (new) The method of claim 80, wherein the communication state comprises one or more network addresses and/or one or more port numbers.

82. (new) The method of claim 81, wherein the network address comprises an IP address for the external computing system and/or the internal computing system.

83. (new) The method of claim 67, further comprising the step of providing visual or audio feedback with one or more visual or audio feedback devices, wherein the one or more visual or audio feedback devices selectively provide visual or audio feedback of the operation or status of a packet filter process.

84. (new) The method of claim 83, wherein the one or more visual or audio feedback devices provide visual or audio feedback that a system performing the packet filter process is powered or operational.

85. (new) The method of claim 84, wherein the one or more visual or audio feedback devices provide visual or audio feedback that the system performing the packet filter process is subjecting a packet to filtering criteria.

86. (new) The method of claim 84, wherein the one or more visual or audio feedback devices provide visual or audio feedback that the system performing the packet filter process has rejected one or more packets.

87. (new) The method of claim 83, wherein the one or more visual or audio feedback devices provide visual or audio feedback that the internal computing system is suspected to be under attack.

88. (new) The method of claim 87, wherein the one or more visual or audio feedback devices provide visual or audio feedback of an estimated severity of the attack.

89. (new) The method of claim 84, wherein the one or more visual or audio feedback devices provide visual or audio feedback of a state of the system performing the packet filter process until the one or more visual or audio feedback devices are reset by a user.

90. (new) The method of claim 89, wherein the one or more visual or audio feedback devices are reset by the state of a physical switch.

91. (new) The method of claim 84, wherein the one or more visual or audio feedback devices comprise at least one light source, wherein the light source is selectively controlled to provide information indicative of the operation or status of the system performing the packet filter process.

92. (new) The method of claim 91, wherein the light source is controlled to have a first color or a second color depending on the operation or status of the system performing the packet filter process.

93. (new) The method of claim 91, wherein the light source is controlled to selectively blink depending on the operation or status of the system performing the packet filter process.

94. (new) The method of claim 93, wherein the light source is controlled to selectively blink at a rate that is indicative of a severity level of a suspected attack on the internal computing system.

95. (new) The method of claim 91, wherein the at least one light source comprises an LED.

96. (new) The method of claim 83, wherein the one or more visual or audio feedback devices comprise a speaker.

REMARKS

In response to the notice to file missing parts mailed November 15, 2010, Applicant is submitting under separate cover a response to the notice. In addition, by this preliminary amendment Applicant is canceling claims 1-66 and adding new claims 67-96.

No new matter has been added.

Please charge any additional fees due, or credit any overpayment, to Deposit Account No. 50-0251.

Respectfully submitted

Alan R. Loudermilk
Registration No. 32,788
Attorney for Applicant(s)

March 21, 2011
Loudermilk & Associates
511 N. Washington Avenue
Marshall, Texas 75670
903-407-4213

I hereby certify that the foregoing is being deposited with the US postal service, postal prepaid, or faxed, to Mail Stop Missing Parts, Commissioner for Patents, P.O. Box 1450, Alexandria, VA 22313-1450, on the date indicated above.

OPAP IAP1 MAR 24 2011 PATENT & TRADEMARK OFFICE

UNITED STATES PATENT AND TRADEMARK OFFICE

UNITED STATES DEPARTMENT OF COMMERCE
United States Patent and Trademark Office
COMMISSIONER FOR PATENTS
P.O. Box 1450
Alexandria, Virginia 22313-1450
www.uspto.gov

APPLICATION NUMBER	FILING OR 371(C) DATE	FIRST NAMED APPLICANT	ATTY. DOCKET NO./TITLE
12/807,641	09/10/2010	Andrew K. Krumel	802-001C

CONFIRMATION NO. 3474

Loudermilk & Associates
Suite B
10950 N. Blaney Avenue
Cupertino, CA 95014

FORMALITIES LETTER

OC000000044025811

Date Mailed: 10/20/2010

NOTICE TO FILE MISSING PARTS OF NONPROVISIONAL APPLICATION

FILED UNDER 37 CFR 1.53(b)

Filing Date Granted

Items Required To Avoid Abandonment:

An application number and filing date have been accorded to this application. The item(s) indicated below, however, are missing. Applicant is given **TWO MONTHS** from the date of this Notice within which to file all required items and pay any fees required below to avoid abandonment. Extensions of time may be obtained by filing a petition accompanied by the extension fee under the provisions of 37 CFR 1.136(a).

- The statutory basic filing fee is missing.
  Applicant must submit $165 to complete the basic filing fee for a small entity.
- The oath or declaration is unsigned.

The following item(s) appear to have been **omitted** from the application:

- Figure(s) 5 described in the specification.

Applicant must reply to this notice within the time period set forth in this notice to avoid abandonment of this application. Applicant must select one of the three following options and the reply must comply with the requirements set forth in the selected option and any other requirements set forth in this notice. The reply should also indicate which option applicant has selected.

I. **Petition for date of deposit:** Should applicant contend that the above-noted omitted item(s) was in fact deposited in the U.S. Patent and Trademark Office (USPTO) with the nonprovisional application papers, a copy of this Notice and a petition (and $400.00 petition fee *(37 CFR 1.17(f))*) with evidence of such deposit **must** be filed within **TWO MONTHS** of the date of this Notice. The petition fee will be refunded if it is determined that the item(s) was received by the USPTO. **THIS TWO MONTH PERIOD IS EXTENDABLE UNDER 37 CFR 1.136(a) or (b).**

II. **Petition for later filing date:** Should applicant desire to supply the omitted item(s) and accept the date that such omitted item(s) was filed in the USPTO as the filing date of the above-identified application, a copy of this Notice, the omitted item(s) (with a supplemental oath or declaration in compliance with 37 CFR 1.63 and 1.64 referring to such items), and a petition under 37 CFR 1.182 (with the $400.00 petition fee *(37 CFR 1.17(f))* requesting the later filing date **must** be filed within **TWO MONTHS** of the date of this Notice. **THIS TWO MONTH PERIOD IS EXTENDABLE UNDER 37 CFR 1.136(a) or (b).**
Applicant is advised that generally the filing fee required for an application is the filing fee in effect on the filing date accorded the application and that payment of the requisite basic filing fee on a date later than the filing date

of the application requires payment of a surcharge (37 CFR 1.16(f)). To avoid processing delays and payment of a surcharge, applicant should submit any balance due for the requisite filing fee based on the later filing date being requested when submitting the omitted item(s) and the petition (and petition fee) requesting the later filing date.

III. **Acceptance of application as deposited:** Applicant may accept the application as deposited in the USPTO by filing an appropriate amendment as set forth in either (A) or (B) below within **TWO MONTHS** of the date of this Notice. **THIS TWO MONTH PERIOD IS EXTENDABLE UNDER 37 CFR 1.136(a) or (b)** . The application will maintain a filing date as of the date of deposit of the application papers in the USPTO, and original application papers (i.e., the original disclosure of the invention) will include only those application papers present in the USPTO on the date of deposit. A petition is not required for this option.

(A) If applicant wants to accept the application as deposited without adding the subject matter that was in the omitted item (e.g., a missing page or figure), applicant is required to submit one or more of the following items without adding any new matter (see 35 U.S.C. 132(a)):

1. For a missing page of the specification,
   a) a substitute specification including claims that amends the specification to renumber the pages consecutively and cancels any incomplete sentences, and
   b) a statement that the substitute specification includes no new matter, in compliance with 37 CFR 1.121(b)(3) and 1.125;
2. For a missing figure of the drawings,
   a) replacement drawing sheets in compliance with 37 CFR 1.121(d) to renumber the drawing figures consecutively (if necessary),
   b) a substitute specification excluding claims that amends the specification to cancel any references to any omitted drawing(s) and corrects the references in the specification to the drawing figures to correspond with any relabeled drawing figures, and
   c) a statement that the substitute specification includes no new matter, in compliance with 37 CFR 1.121(b)(3) and 1.125;
3. For a missing page of the claim listing only, a replacement claim listing with the claims renumbered consecutively or, if amendment to the claims is also necessary, then a complete claim listing in compliance with 37 CFR 1.121(c);
4. For a missing or unreadable compact disc,
   a) a substitute specification (excluding the claims) deleting the reference to the compact disc and the files contained on the compact disc, and
   b) a statement that the substitute specification includes no new matter, in compliance with 37 CFR 1.121(b)(3) and 1.125; and
5. For a missing or unreadable file submitted on a compact disc,
   a) a substitute specification (excluding the claims) deleting the reference to the missing or unreadable file, and a statement that the substitute specification includes no new matter, in compliance with 37 CFR 1.121(b)(3) and 1.125; and
   b) a replacement transmittal letter listing all of the files except the missing or unreadable file in compliance with 37 CFR 1.52(e)(3)(ii).

(B) Alternatively, if applicant wants to accept the application as deposited but wishes to add the subject matter in the omitted item (e.g., a missing page or figure) by relying on an incorporation by reference under 37 CFR 1.57 or other portions of the original disclosure, applicant is required to submit one or more of the following items without adding any new matter (see 35 U.S.C. 132(a)):

1. To add the subject matter in a missing page of specification,
   a) a substitute specification excluding claims and
   b) a statement that the substitute specification includes no new matter, in compliance with 37 CFR 1.121(b)(3) and 1.125;
2. To add a missing figure of the drawings, new and replacement drawing sheets in compliance with 37 CFR 1.121(d);

3. To add the subject matter in a missing page of the claim listing, a complete claim listing in compliance with 37 CFR 1.121(c) (e.g., a claim in the missing page should be submitted as a new claim);
4. To add the subject matter in a missing or unreadable compact disc,
   a) a replacement compact disc and a duplicate copy of the compact disc, in compliance with 37 CFR 1.52(e); and
   b) a statement that the replacement compact disc contains no new matter in compliance with 37 CFR 1.52(e)(4); and,
5. To add the subject matter in a missing or unreadable file submitted on a compact disc,
   a) a replacement compact disc that contains all of the files listed in the specification including the missing or unreadable file and a duplicate copy of the compact disc, in compliance with 37 CFR 1.52(e); and
   b) a statement that the replacement compact disc contains no new matter in compliance with 37 CFR 1.52(e)(4).

If applicant is relying on an incorporation by reference under 37 CFR 1.57 to add the omitted subject matter, then applicant must also comply with the requirements of 37 CFR 1.57.

Applicant is cautioned that correction of the above items may cause the specification and drawings page count to exceed 100 pages. If the specification and drawings exceed 100 pages, applicant will need to submit the required application size fee.

The applicant needs to satisfy supplemental fees problems indicated below.

The required item(s) identified below must be timely submitted to avoid abandonment:

- Additional claim fees of **$1196** as a small entity, including any required multiple dependent claim fee, are required. Applicant must submit the additional claim fees or cancel the additional claims for which fees are due.
- To avoid abandonment, a surcharge (for late submission of filing fee, search fee, examination fee or oath or declaration) as set forth in 37 CFR 1.16(f) of **$65** for a small entity in compliance with 37 CFR 1.27, must be submitted with the missing items identified in this notice.

SUMMARY OF FEES DUE:

Total additional fee(s) required for this application is **$1806** for a small entity
- **$165** Statutory basic filing fee.
- **$65** Surcharge.
- The application search fee has not been paid. Applicant must submit **$270** to complete the search fee.
- The application examination fee has not been paid. Applicant must submit **$110** to complete the examination fee for a small entity in compliance with 37 CFR 1.27.
- Total additional claim fee(s) for this application is **$1196**
  - **$1196** for **45** total claims over 20.

Replies should be mailed to:

Mail Stop Missing Parts
Commissioner for Patents
P.O. Box 1450
Alexandria VA 22313-1450

Registered users of EFS-Web may alternatively submit their reply to this notice via EFS-Web.
https://sportal.uspto.gov/authenticate/AuthenticateUserLocalEPF.html

For more information about EFS-Web please call the USPTO Electronic Business Center at **1-866-217-9197** or visit our website at http://www.uspto.gov/ebc.

If you are not using EFS-Web to submit your reply, you must include a copy of this notice.

/ldvan/

Office of Data Management, Application Assistance Unit (571) 272-4000, or (571) 272-4200, or 1-888-786-0101

OPAP IAP1 MAR 24 2011 PATENT & TRADEMARK OFFICE

PTO/SB/05 (08-08)
Approved for use through 09/30/2010. OMB 0651-0032
U.S. Patent and Trademark Office. U.S. DEPARTMENT OF COMMERCE
Under the Paperwork Reduction Act of 1995, no persons are required to respond to a collection of information unless it displays a valid OMB control number.

UTILITY PATENT APPLICATION TRANSMITTAL

(Only for new nonprovisional applications under 37 CFR 1.53(b))

Attorney Docket No.	802-001C
First Inventor	KRUMEL
Title	REAL TIME FIREWALL/DATA PROT.
Express Mail Label No.	EL 751999378US

APPLICATION ELEMENTS
See MPEP chapter 600 concerning utility patent application contents.

1. ☐ **Fee Transmittal Form** (e.g., PTO/SB/17)
2. ☒ **Applicant claims small entity status.** See 37 CFR 1.27.
3. ☒ **Specification** [*Total Pages* 40]
   Both the claims and abstract must start on a new page
   (For information on the preferred arrangement, see MPEP 608.01(a))
4. ☒ **Drawing(s)** (*35 U.S.C. 113*) [*Total Sheets* 14]
5. **Oath or Declaration** [*Total Sheets* _____]
   a. ☐ Newly executed (original or copy)
   b. ☒ A copy from a prior application (37 CFR 1.63(d))
   (for continuation/divisional with Box 18 completed)
   i. ☐ DELETION OF INVENTOR(S)
   Signed statement attached deleting inventor(s) name in the prior application, see 37 CFR 1.63(d)(2) and 1.33(b).
6. ☐ **Application Data Sheet.** See 37 CFR 1.76
7. ☐ **CD-ROM or CD-R** in duplicate, large table or Computer Program *(Appendix)*
   ☐ Landscape Table on CD
8. **Nucleotide and/or Amino Acid Sequence Submission**
   (if applicable, items a. – c. are required)
   a. ☐ Computer Readable Form (CRF)
   b. Specification Sequence Listing on:
      i. ☐ CD-ROM or CD-R (2 copies); or
      ii. ☐ Paper
   c. ☐ Statements verifying identity of above copies

ACCOMPANYING APPLICATION PARTS

9. ☐ **Assignment Papers** (cover sheet & document(s))
   Name of Assignee _____
10. ☐ **37 CFR 3.73(b) Statement** *(when there is an assignee)* ☐ **Power of Attorney**
11. ☐ **English Translation Document** *(if applicable)*
12. ☐ **Information Disclosure Statement** (PTO/SB/08 or PTO-1449)
    ☐ Copies of citations attached
13. ☐ **Preliminary Amendment**
14. ☐ **Return Receipt Postcard** (MPEP 503)
    (Should be specifically itemized)
15. ☐ **Certified Copy of Priority Document(s)**
    (if foreign priority is claimed)
16. ☐ **Nonpublication Request** under 35 U.S.C. 122(b)(2)(B)(i). Applicant must attach form PTO/SB/35 or equivalent.
17. ☐ Other: _____

ADDRESS TO: **Commissioner for Patents, P.O. Box 1450, Alexandria VA 22313-1450**

18. If a CONTINUING APPLICATION, *check appropriate box, and supply the requisite information below and in the first sentence of the specification following the title, or in an Application Data Sheet under 37 CFR 1.76:*

☒ Continuation ☐ Divisional ☐ Continuation-in-part (CIP) of prior application No.: 11/374,465

Prior application information: HEREBY INCORPORATED BY REFERENCE *Examiner* SIMITOSKI *Art Unit:* 2439

19. CORRESPONDENCE ADDRESS

☐ The address associated with Customer Number: _____ OR ☐ Correspondence address below

Name	ALAN LOUDERMILK				
Address	LOUDERMILK + ASSOCIATES PO BOX 3607				
City	LOS ALTOS	State	CA	Zip Code	94024
Country	US	Telephone	[redacted]312618-6500	Email	alan@loudermilk.com

Signature		Date	9/10/10
Name (Print/Type)	ALAN P. LOUDERMILK	Registration No. (Attorney/Agent)	32,788

This collection of information is required by 37 CFR 1.53(b). The information is required to obtain or retain a benefit by the public which is to file (and by the USPTO to process) an application. Confidentiality is governed by 35 U.S.C. 122 and 37 CFR 1.11 and 1.14. This collection is estimated to take 12 minutes to complete, including gathering, preparing, and submitting the completed application form to the USPTO. Time will vary depending upon the individual case. Any comments on the amount of time you require to complete this form and/or suggestions for reducing this burden, should be sent to the Chief Information Officer, U.S. Patent and Trademark Office, U.S. Department of Commerce, P.O. Box 1450, Alexandria, VA 22313-1450. DO NOT SEND FEES OR COMPLETED FORMS TO THIS ADDRESS. **SEND TO: Commissioner for Patents, P.O. Box 1450, Alexandria, VA 22313-1450.**

If you need assistance in completing the form, call 1-800-PTO-9199 and select option 2.

RECEIPT IS ACKNOWLEDGED: 802-001C
EXPRESS MAIL NO.

- APPLICATION TRANSMITTAL
- SPECIFICATION, CLAIMS, ABSTRACT (40 PAGES)
- FORMAL DRAWINGS (14 SHEETS)
- COPY OF DECLARATION
- COPY OF PETITION FOR EXTENSION FILED IN PARENT APPLICATION

U.S. PTO
12807641
091010

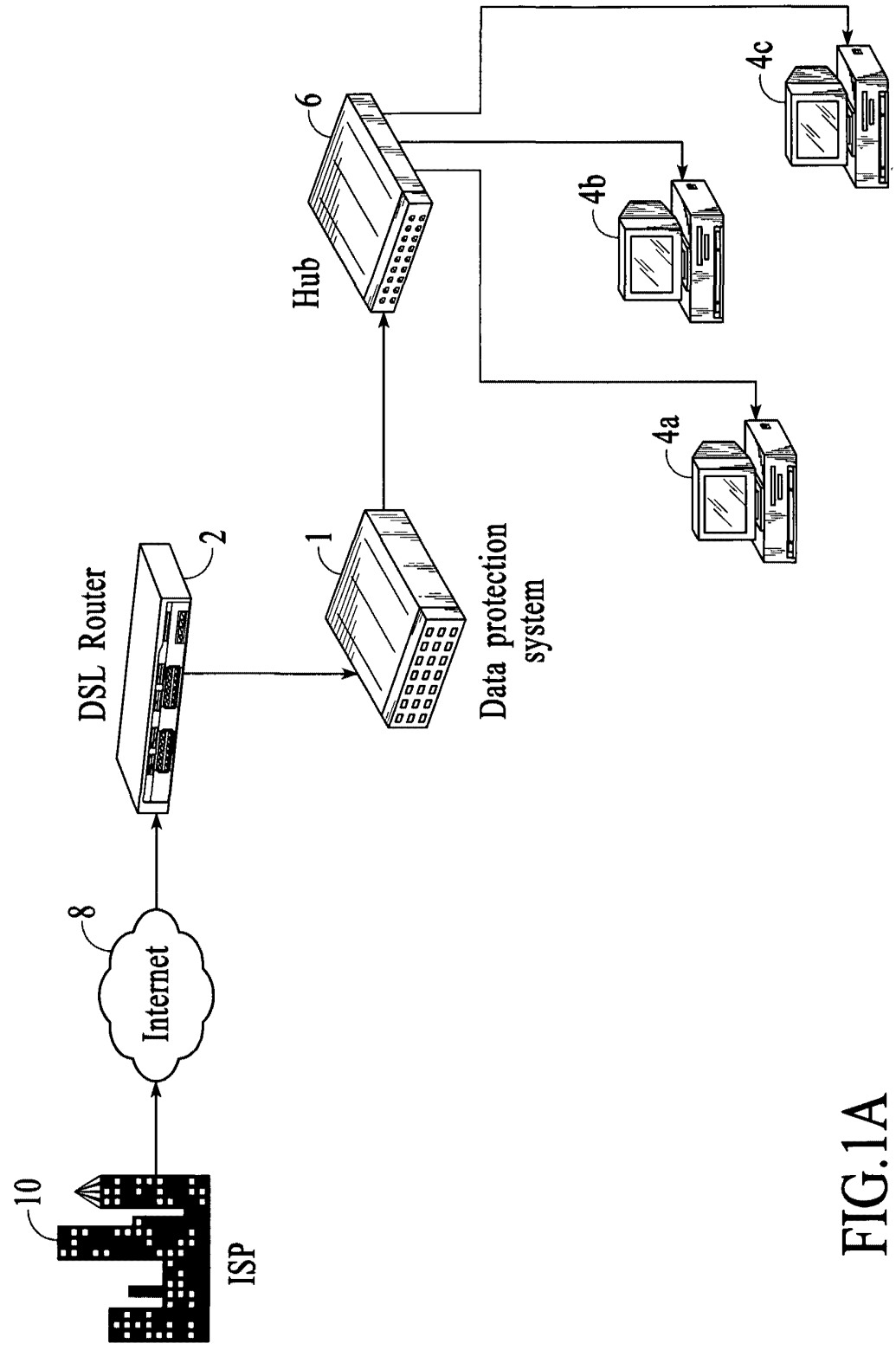
10
ISP
8
Internet
DSL Router
2
1
Data protection system
Hub
6
4a
4b
4c

FIG.1A

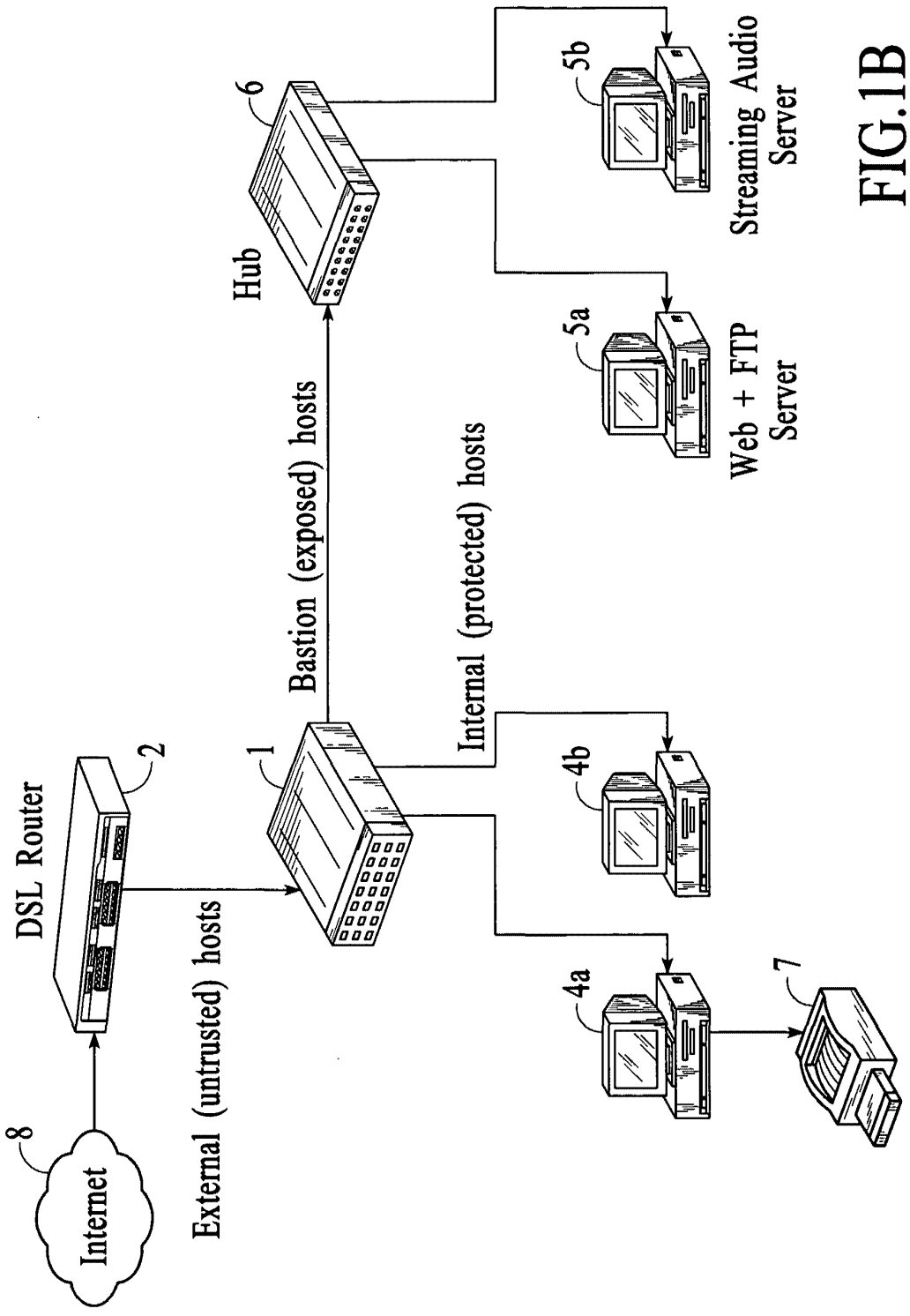
Internet
8
DSL Router
2
External (untrusted) hosts
1
Bastion (exposed) hosts
Hub
6
Internal (protected) hosts
4a
4b
5a
Web + FTP Server
5b
Streaming Audio Server
7

FIG.1B

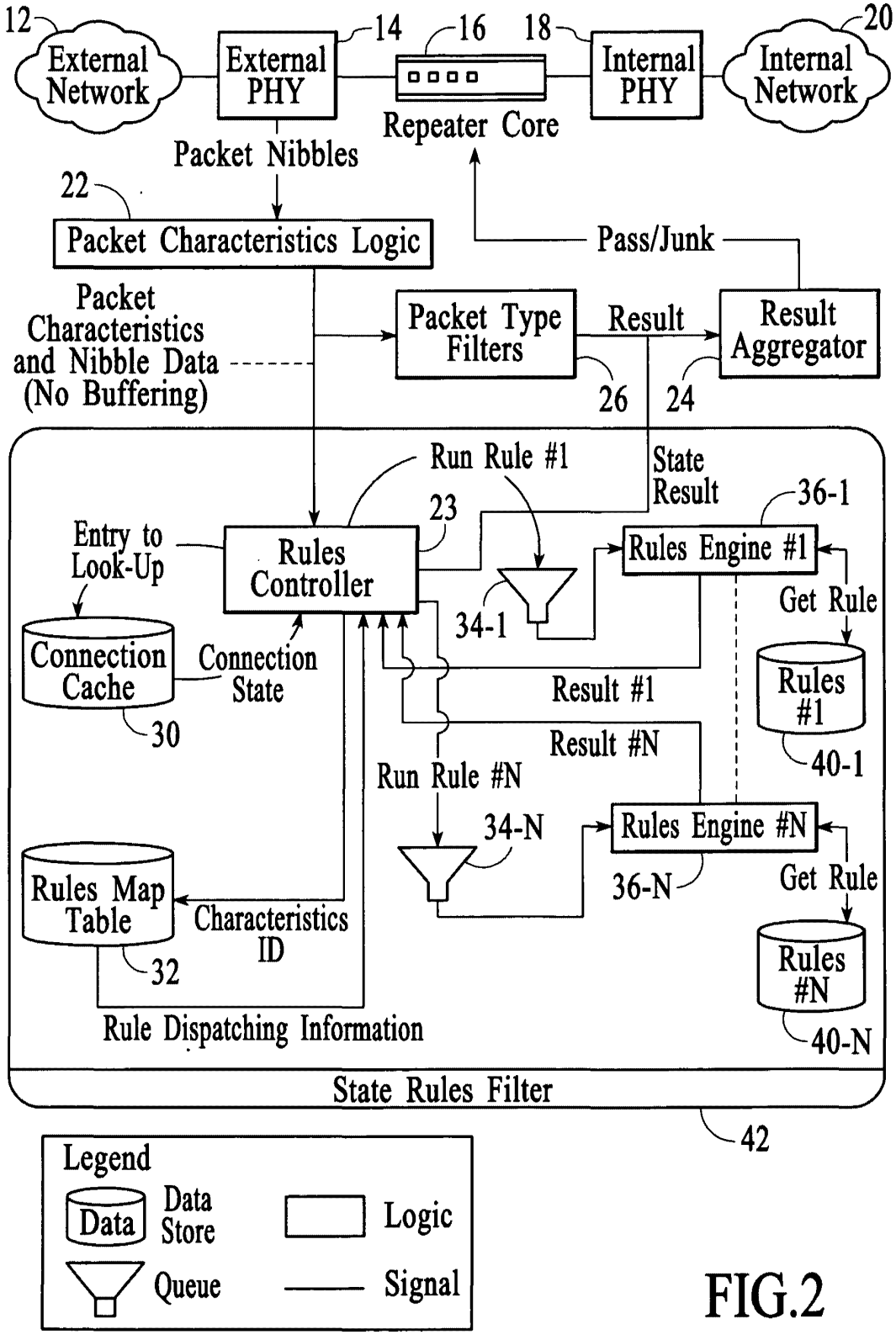
12
External Network
External PHY
14
16
18
Internal PHY
20
Internal Network
Repeater Core
Packet Nibbles
22
Packet Characteristics Logic
Pass/Junk
Packet Characteristics and Nibble Data (No Buffering)
Packet Type Filters
Result
Result Aggregator
26
24
Run Rule #1
State Result
23
36-1
Entry to Look-Up
Rules Controller
Rules Engine #1
Get Rule
34-1
Connection Cache
Connection State
30
Result #1
Rules #1
40-1
Result #N
Run Rule #N
34-N
Rules Engine #N
Rules Map Table
Characteristics ID
36-N
Get Rule
32
Rules #N
Rule Dispatching Information
40-N
State Rules Filter
42
Legend
Data
Data Store
Logic
Queue
Signal

FIG.2

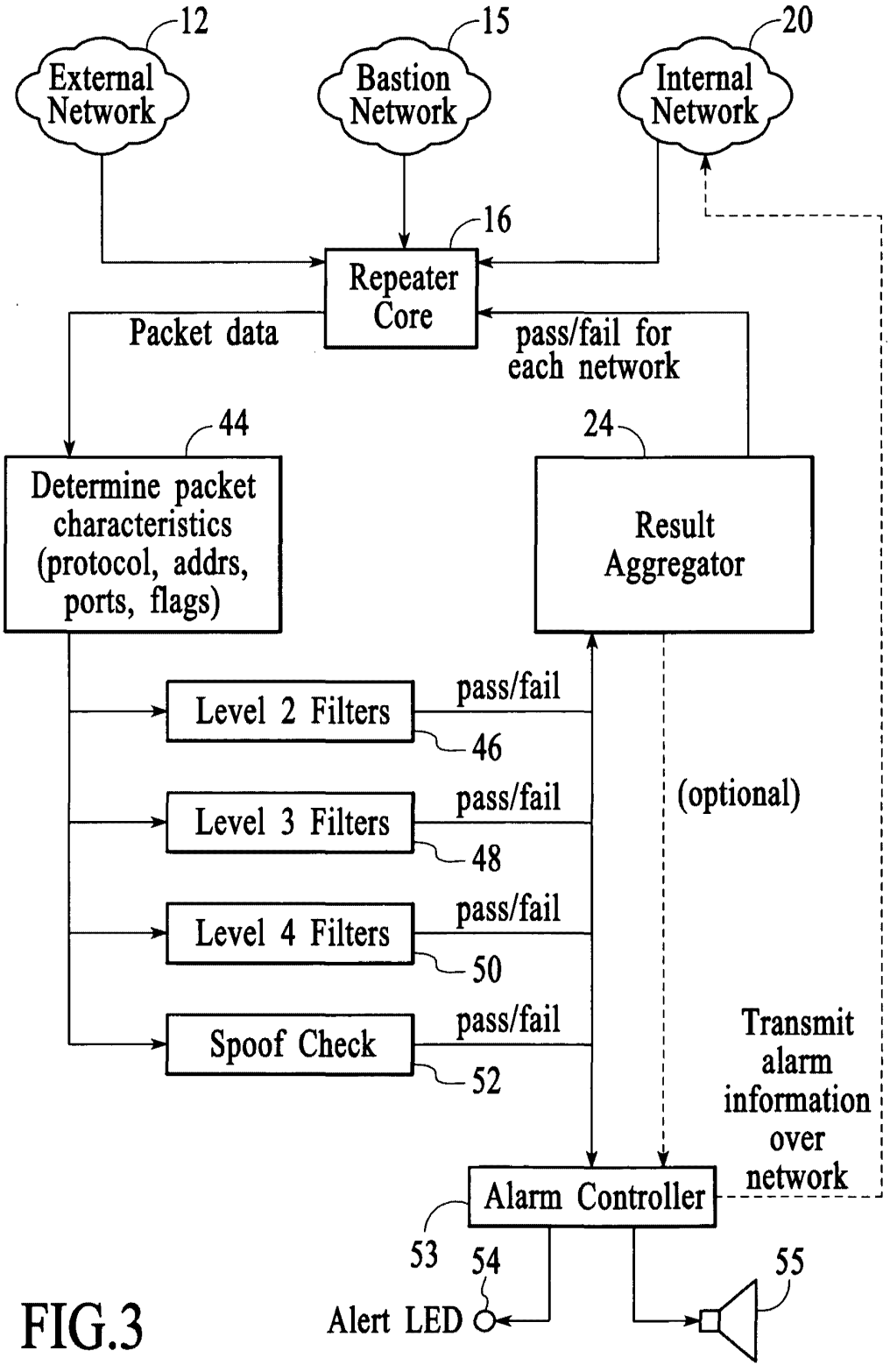
12
External Network
15
Bastion Network
20
Internal Network
16
Repeater Core
Packet data
pass/fail for each network
44
Determine packet characteristics (protocol, addrs, ports, flags)
24
Result Aggregator
Level 2 Filters
pass/fail
46
Level 3 Filters
pass/fail
48
Level 4 Filters
pass/fail
50
Spoof Check
pass/fail
52
(optional)
Transmit alarm information over network
Alarm Controller
53
54
55
Alert LED

FIG.3

FIG.4

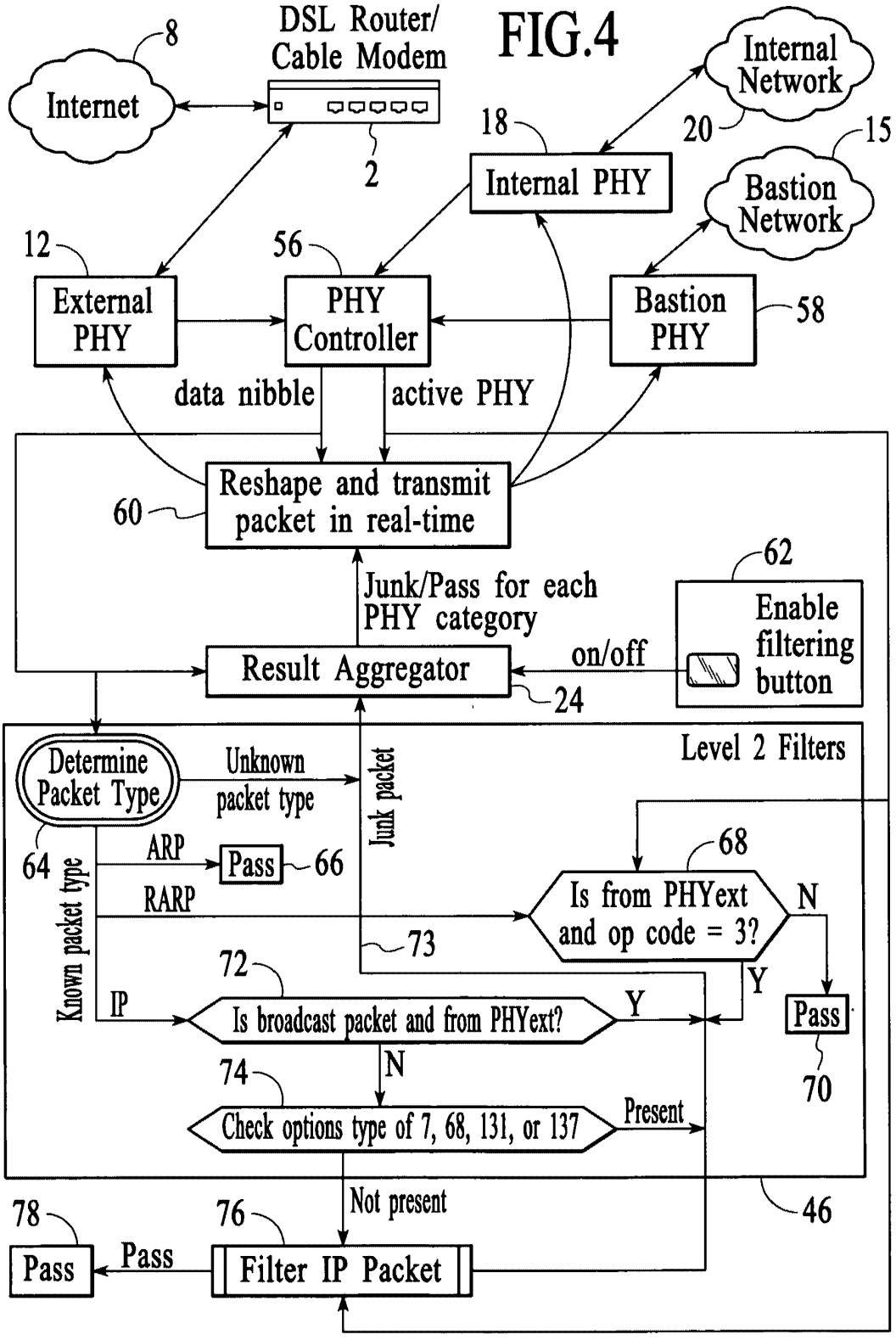
Internet
8
DSL Router/
Cable Modem
2
Internal
Network
20
18
Internal PHY
15
Bastion
Network
12
External
PHY
56
PHY
Controller
Bastion
PHY
58
data nibble
active PHY
Reshape and transmit
packet in real-time
60
Junk/Pass for each
PHY category
62
Enable
filtering
button
Result Aggregator
on/off
24
Level 2 Filters
Determine
Packet Type
Unknown
packet type
Junk packet
64
ARP
Pass
66
RARP
Known packet type
IP
68
Is from PHYext
and op code = 3?
N
Y
73
72
Is broadcast packet and from PHYext?
Y
Pass
70
N
74
Check options type of 7, 68, 131, or 137
Present
Not present
46
78
76
Pass
Pass
Filter IP Packet

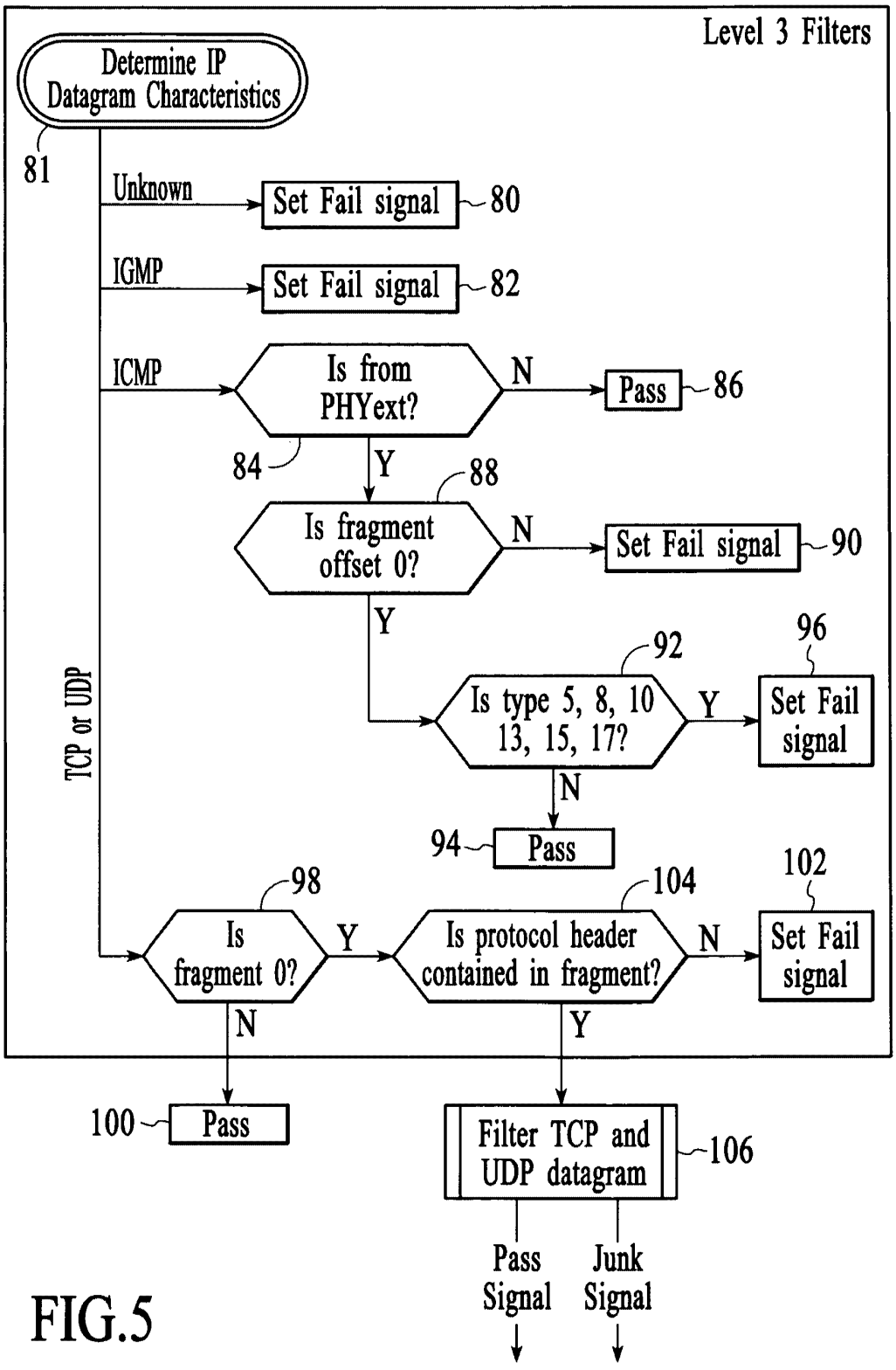
Level 3 Filters
Determine IP Datagram Characteristics
81
Unknown
Set Fail signal
80
IGMP
Set Fail signal
82
ICMP
Is from PHYext?
N
Pass
86
84
Y
88
Is fragment offset 0?
N
Set Fail signal
90
Y
92
96
Is type 5, 8, 10 13, 15, 17?
Y
Set Fail signal
N
94
Pass
TCP or UDP
98
104
102
Is fragment 0?
Y
Is protocol header contained in fragment?
N
Set Fail signal
N
Y
100
Pass
Filter TCP and UDP datagram
106
Pass Signal
Junk Signal

FIG.5

FIG.6

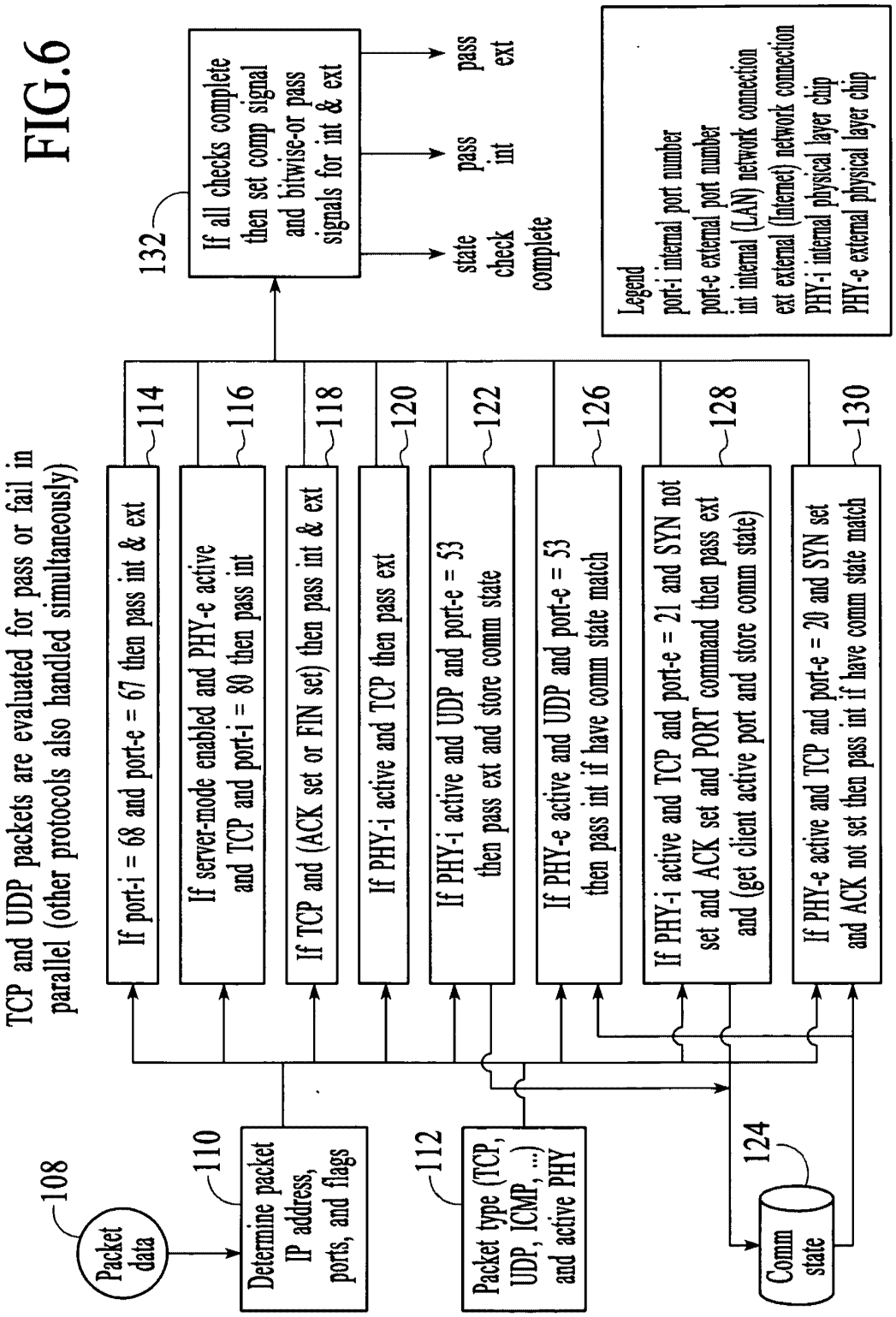
TCP and UDP packets are evaluated for pass or fail in parallel (other protocols also handled simultaneously)
108
Packet data
110
Determine packet IP address, ports, and flags
112
Packet type (TCP, UDP, ICMP, ...) and active PHY
124
Comm state
114
If port-i = 68 and port-e = 67 then pass int & ext
116
If server-mode enabled and PHY-e active and TCP and port-i = 80 then pass int
118
If TCP and (ACK set or FIN set) then pass int & ext
120
If PHY-i active and TCP then pass ext
122
If PHY-i active and UDP and port-e = 53 then pass ext and store comm state
126
If PHY-e active and UDP and port-e = 53 then pass int if have comm state match
128
If PHY-i active and TCP and port-e = 21 and SYN not set and ACK set and PORT command then pass ext and (get client active port and store comm state)
130
If PHY-e active and TCP and port-e = 20 and SYN set and ACK not set then pass int if have comm state match
132
If all checks complete then set comp signal and bitwise-or pass signals for int & ext
state check complete
pass int
pass ext
Legend
port-i internal port number
port-e external port number
int internal (LAN) network connection
ext external (Internet) network connection
PHY-i internal physical layer chip
PHY-e external physical layer chip

FIG.7

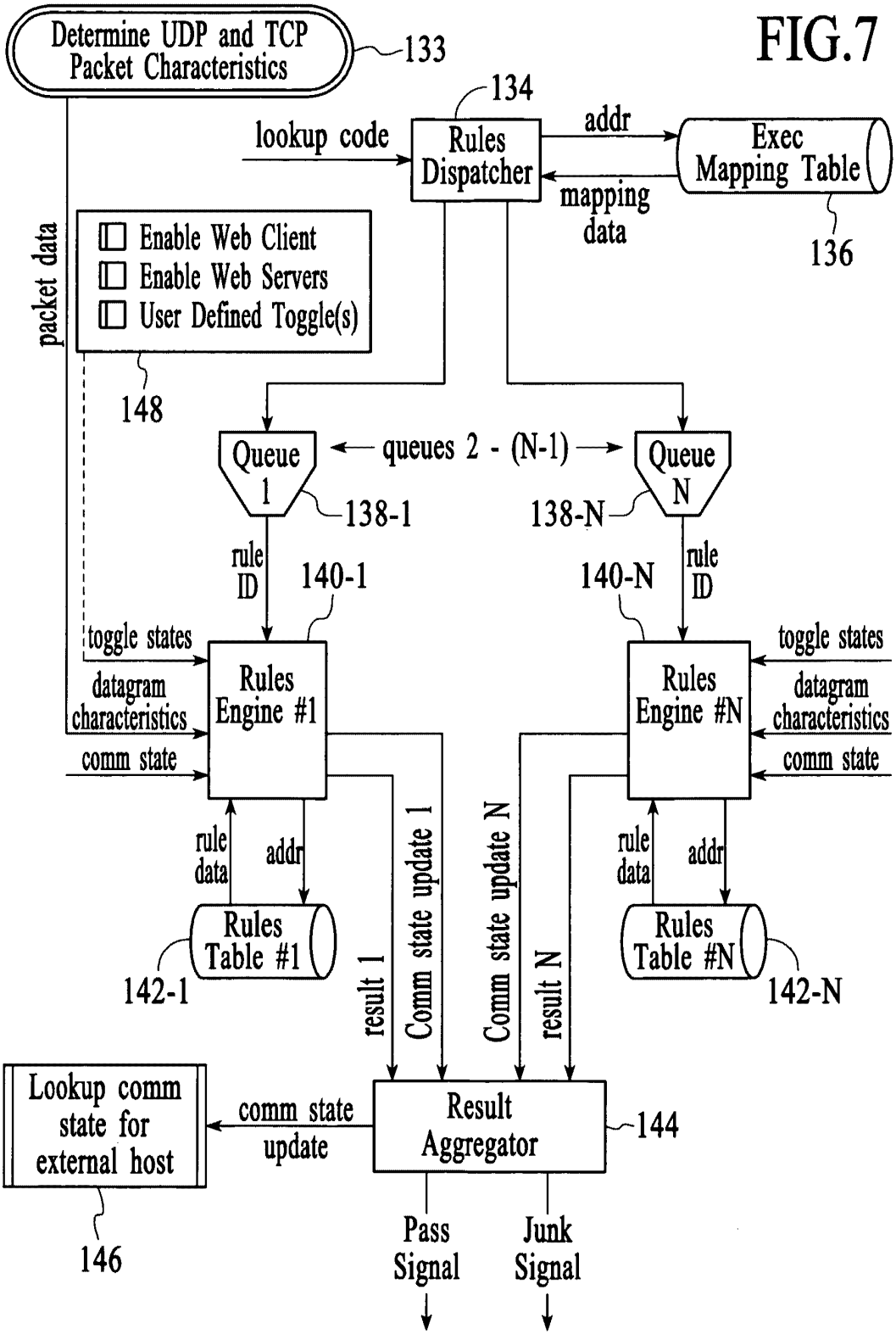
Determine UDP and TCP Packet Characteristics
133
134
lookup code
Rules Dispatcher
addr
mapping data
Exec Mapping Table
136
packet data
Enable Web Client
Enable Web Servers
User Defined Toggle(s)
148
Queue 1
queues 2 - (N-1)
Queue N
138-1
138-N
rule ID
140-1
140-N
rule ID
toggle states
datagram characteristics
comm state
Rules Engine #1
Rules Engine #N
toggle states
datagram characteristics
comm state
rule data
addr
rule data
addr
Rules Table #1
Rules Table #N
142-1
142-N
result 1
Comm state update 1
Comm state update N
result N
Lookup comm state for external host
comm state update
Result Aggregator
144
146
Pass Signal
Junk Signal

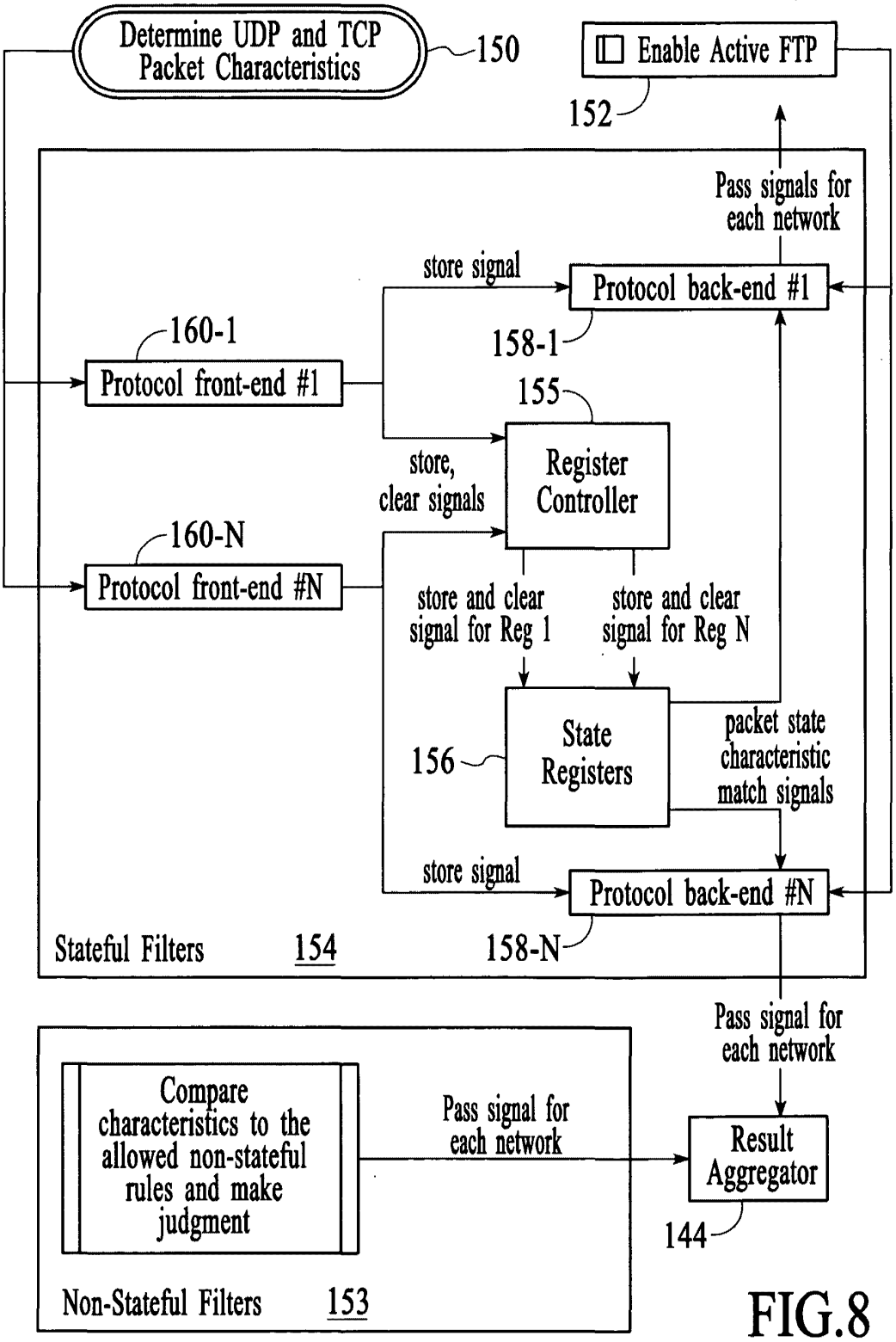
Determine UDP and TCP Packet Characteristics
150
Enable Active FTP
152
Pass signals for each network
store signal
Protocol back-end #1
158-1
160-1
Protocol front-end #1
155
Register Controller
store, clear signals
160-N
Protocol front-end #N
store and clear signal for Reg 1
store and clear signal for Reg N
State Registers
156
packet state characteristic match signals
store signal
Protocol back-end #N
158-N
Stateful Filters 154
Pass signal for each network
Compare characteristics to the allowed non-stateful rules and make judgment
Pass signal for each network
Result Aggregator
144
Non-Stateful Filters 153

FIG.8

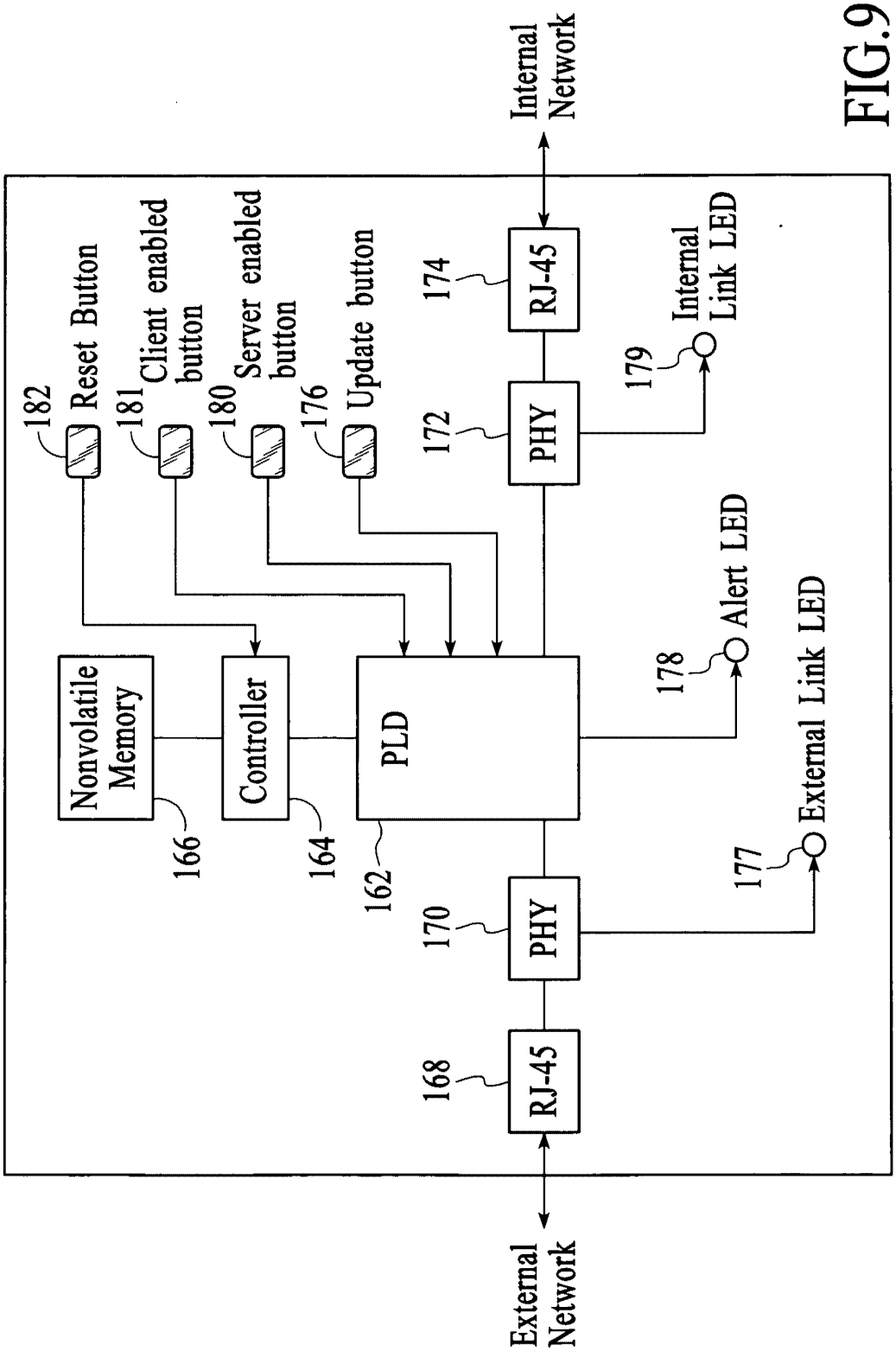
Internal Network
Reset Button
Client enabled button
Server enabled button
Update button
182
181
180
176
174
RJ-45
172
PHY
179
Internal Link LED
Nonvolatile Memory
Controller
PLD
178
Alert LED
166
164
162
170
PHY
177
External Link LED
168
RJ-45
External Network

FIG.9

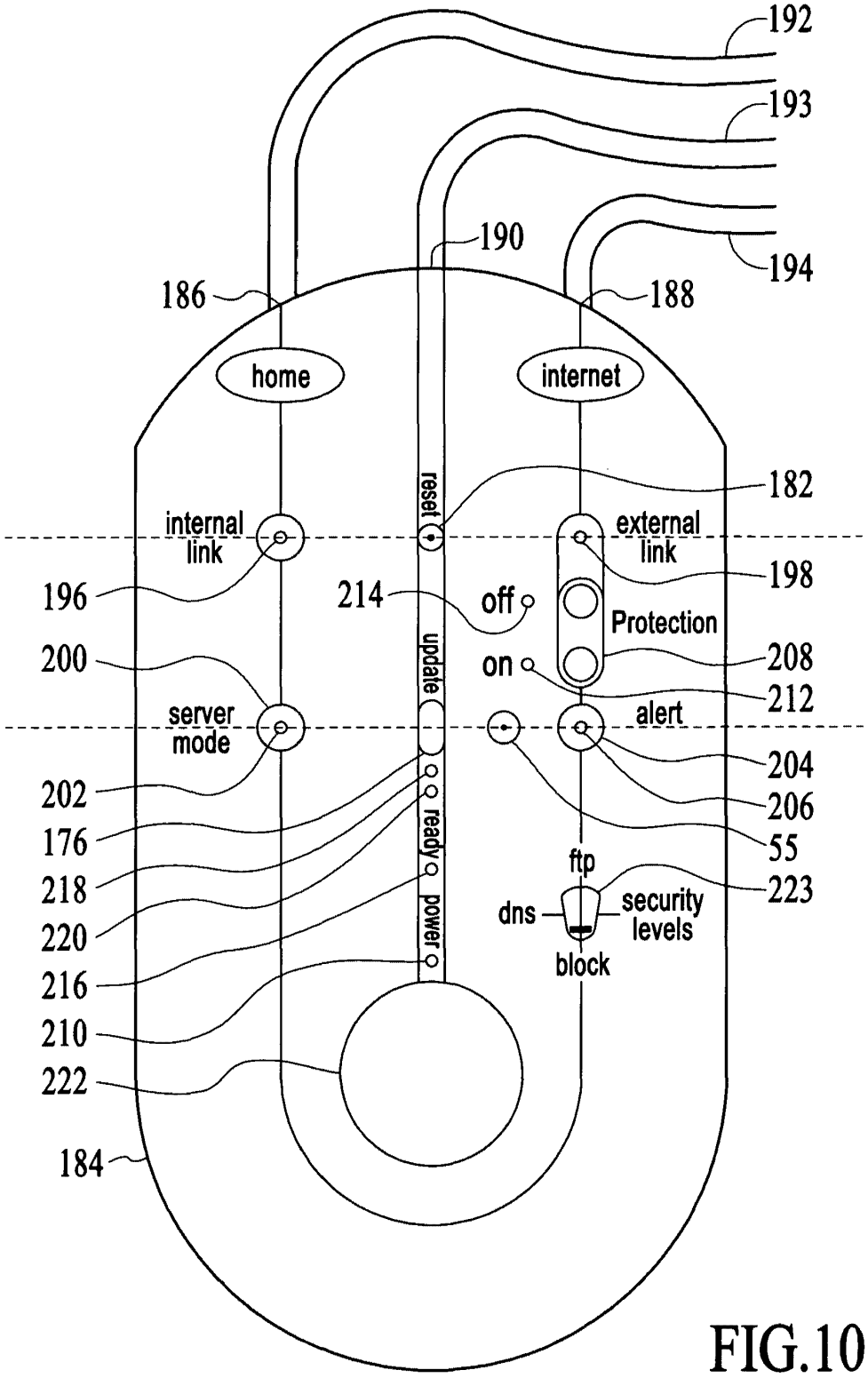
192
193
190
194
186
188
home
internet
reset
182
internal link
external link
198
196
214
off
Protection
200
on
208
212
update
server mode
alert
204
202
206
176
55
ready
ftp
218
223
dns
security levels
power
220
block
216
210
222
184

FIG.10

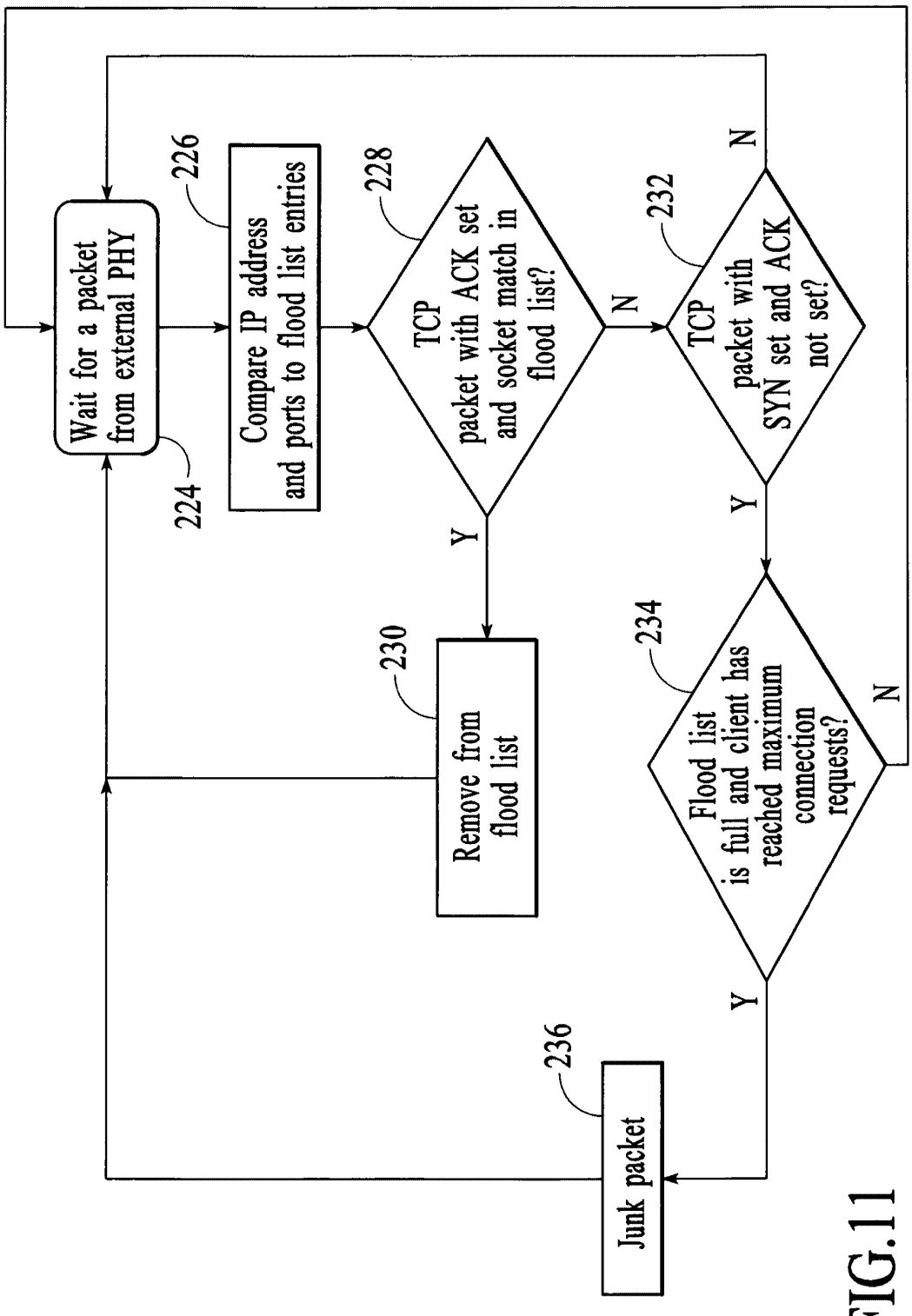
Wait for a packet from external PHY
224
Compare IP address and ports to flood list entries
226
TCP packet with ACK set and socket match in flood list?
228
Y
N
Remove from flood list
230
TCP packet with SYN set and ACK not set?
232
Y
N
Flood list is full and client has reached maximum connection requests?
234
Y
N
Junk packet
236

FIG.11

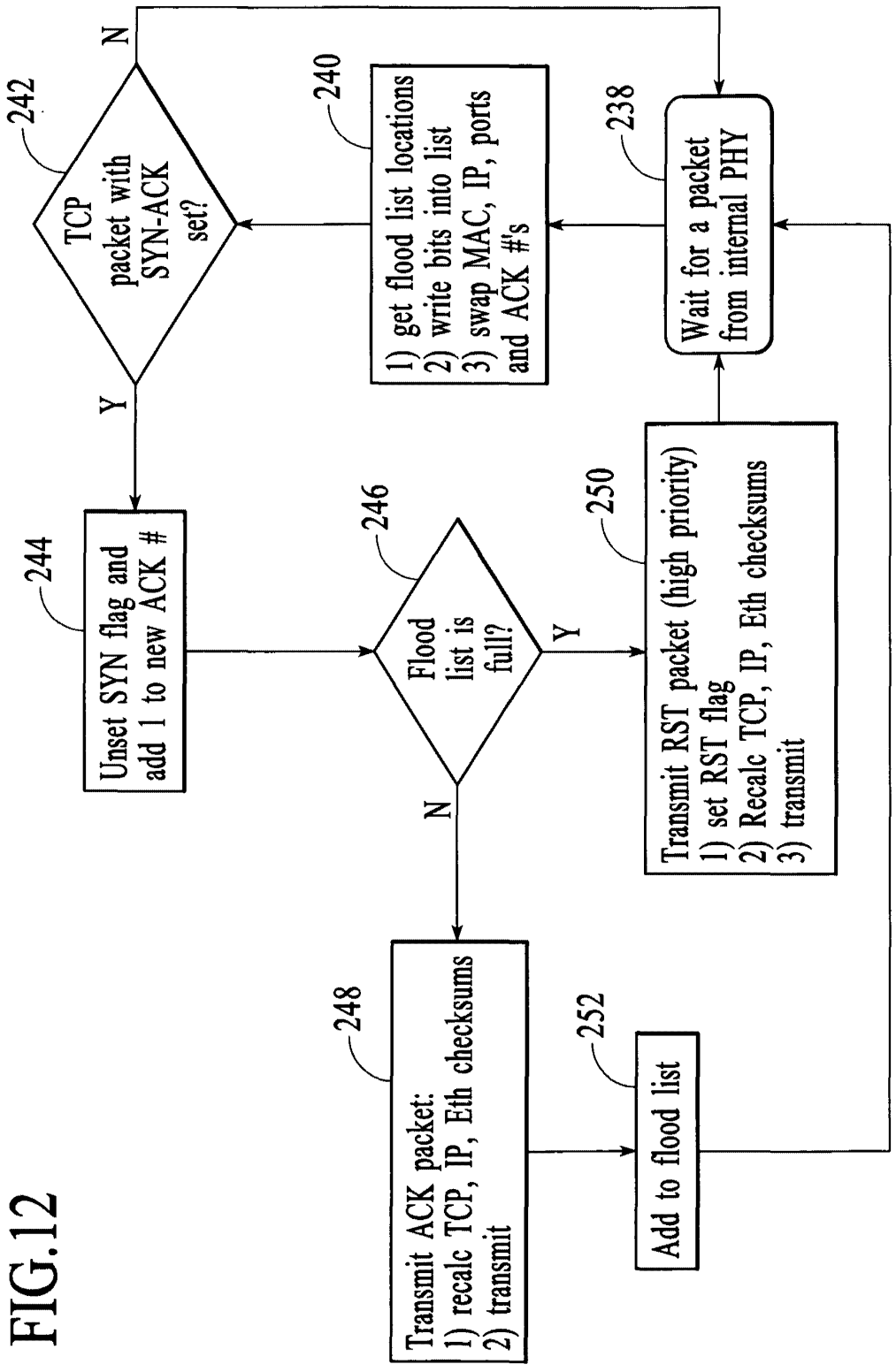
238
Wait for a packet from internal PHY
240
1) get flood list locations
2) write bits into list
3) swap MAC, IP, ports and ACK #'s
242
TCP packet with SYN-ACK set?
N
Y
244
Unset SYN flag and add 1 to new ACK #
246
Flood list is full?
Y
N
250
Transmit RST packet (high priority)
1) set RST flag
2) Recalc TCP, IP, Eth checksums
3) transmit
248
Transmit ACK packet:
1) recalc TCP, IP, Eth checksums
2) transmit
252
Add to flood list

FIG.12

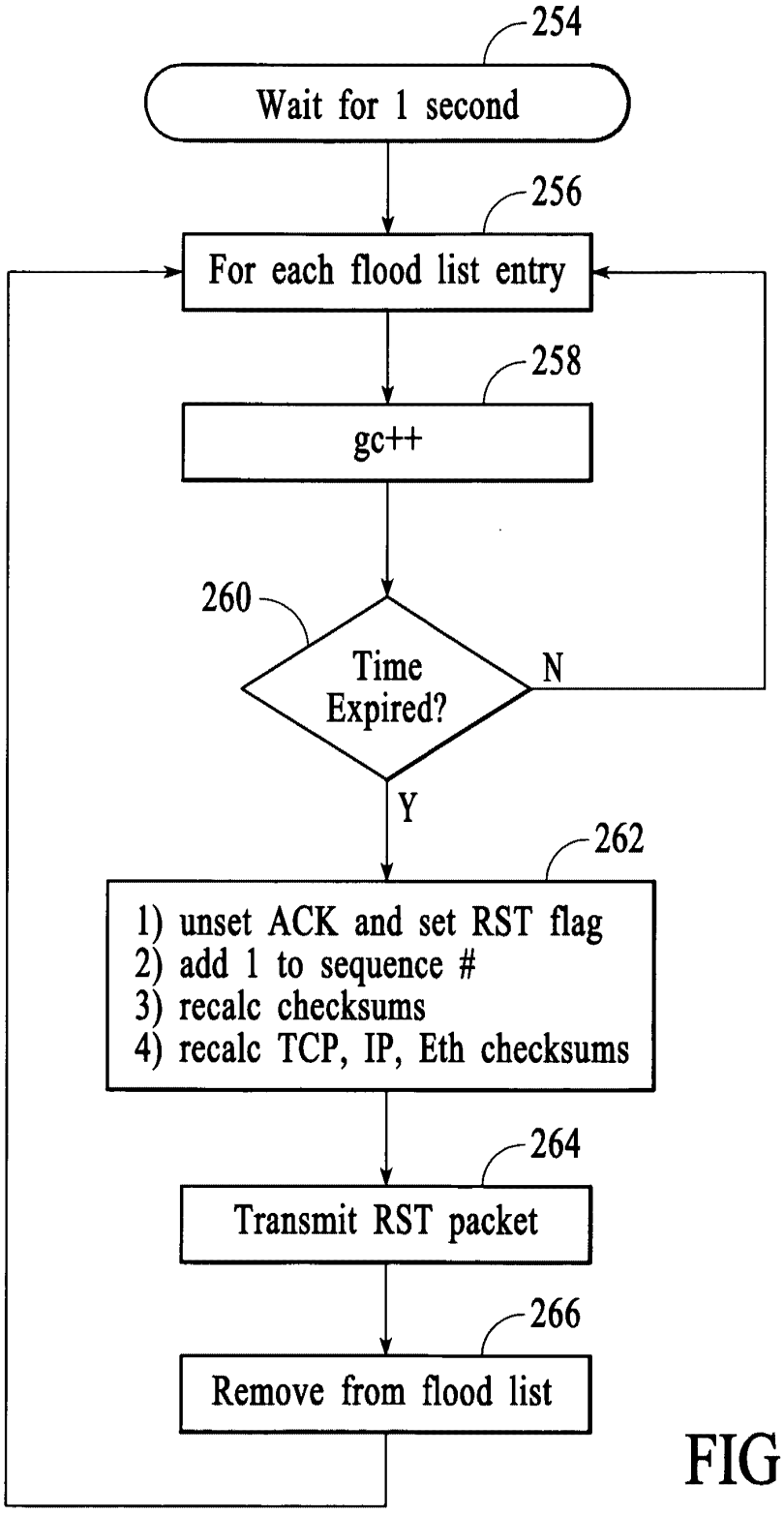
254
Wait for 1 second
256
For each flood list entry
258
gc++
260
Time Expired?
N
Y
262
1) unset ACK and set RST flag
2) add 1 to sequence #
3) recalc checksums
4) recalc TCP, IP, Eth checksums
264
Transmit RST packet
266
Remove from flood list

FIG.13

DocCode - SCORE

SCORE Placeholder Sheet for IFW Content

Application Number: **12807641** Document Date: **03/24/2011**

The presence of this form in the IFW record indicates that the following document type was received in paper and is scanned and stored in the SCORE database.

- Drawings

Images of the original documents are scanned in gray scale or color and stored in SCORE. Bi-tonal images are also stored in IFW. Defects visible in both IFW and SCORE are indicative of defects in the original paper documents.

To access the documents in the SCORE database, refer to instructions developed by SIRA.

At the time of document entry (noted above):

- Examiners may access SCORE content via the eDAN interface.
- Other USPTO employees can bookmark the current SCORE URL (http://es/ScoreAccessWeb/).
- External customers may access SCORE content via the Public and Private PAIR interfaces.

Form Revision Date: December 8, 2006

PTO/SB/06 (07-06)
Approved for use through 1/31/2007. OMB 0651-0032
U.S. Patent and Trademark Office; U.S. DEPARTMENT OF COMMERCE
Under the Paperwork Reduction Act of 1995, no persons are required to respond to a collection of information unless it displays a valid OMB control number.

PATENT APPLICATION FEE DETERMINATION RECORD

Substitute for Form PTO-875

Application or Docket Number	Filing Date	☐ To be Mailed
12/807,641	09/10/2010	

APPLICATION AS FILED – PART I

	(Column 1)	(Column 2)	SMALL ENTITY ☒		OR	OTHER THAN SMALL ENTITY	
FOR	NUMBER FILED	NUMBER EXTRA	RATE ($)	FEE ($)		RATE ($)	FEE ($)
☐ BASIC FEE (37 CFR 1.16(a), (b), or (c))	N/A	N/A	N/A			N/A	
☐ SEARCH FEE (37 CFR 1.16(k), (i), or (m))	N/A	N/A	N/A			N/A	
☐ EXAMINATION FEE (37 CFR 1.16(o), (p), or (q))	N/A	N/A	N/A			N/A	
TOTAL CLAIMS (37 CFR 1.16(i))	minus 20 =	*	X $ =		OR	X $ =	
INDEPENDENT CLAIMS (37 CFR 1.16(h))	minus 3 =	*	X $ =			X $ =	
☐ APPLICATION SIZE FEE (37 CFR 1.16(s))	If the specification and drawings exceed 100 sheets of paper, the application size fee due is $250 ($125 for small entity) for each additional 50 sheets or fraction thereof. See 35 U.S.C. 41(a)(1)(G) and 37 CFR 1.16(s).						
☐ MULTIPLE DEPENDENT CLAIM PRESENT (37 CFR 1.16(j))							
* If the difference in column 1 is less than zero, enter "0" in column 2.			TOTAL			TOTAL	

APPLICATION AS AMENDED – PART II

AMENDMENT	03/24/2011	(Column 1) CLAIMS REMAINING AFTER AMENDMENT		(Column 2) HIGHEST NUMBER PREVIOUSLY PAID FOR	(Column 3) PRESENT EXTRA	SMALL ENTITY RATE ($)	ADDITIONAL FEE ($)	OR	OTHER THAN SMALL ENTITY RATE ($)	ADDITIONAL FEE ($)
	Total (37 CFR 1.16(i))	* 30	Minus	** 30	= 0	X $26 =	0	OR	X $ =	
	Independent (37 CFR 1.16(h))	* 1	Minus	***3	= 0	X $110 =	0	OR	X $ =	
	☐ Application Size Fee (37 CFR 1.16(s))									
	☐ FIRST PRESENTATION OF MULTIPLE DEPENDENT CLAIM (37 CFR 1.16(j))							OR		
						TOTAL ADD'L FEE	0	OR	TOTAL ADD'L FEE	

AMENDMENT		(Column 1) CLAIMS REMAINING AFTER AMENDMENT		(Column 2) HIGHEST NUMBER PREVIOUSLY PAID FOR	(Column 3) PRESENT EXTRA	RATE ($)	ADDITIONAL FEE ($)	OR	RATE ($)	ADDITIONAL FEE ($)
	Total (37 CFR 1.16(i))	*	Minus	**	=	X $ =		OR	X $ =	
	Independent (37 CFR 1.16(h))	*	Minus	***	=	X $ =		OR	X $ =	
	☐ Application Size Fee (37 CFR 1.16(s))									
	☐ FIRST PRESENTATION OF MULTIPLE DEPENDENT CLAIM (37 CFR 1.16(j))							OR		
						TOTAL ADD'L FEE		OR	TOTAL ADD'L FEE	

* If the entry in column 1 is less than the entry in column 2, write "0" in column 3.

** If the "Highest Number Previously Paid For" IN THIS SPACE is less than 20, enter "20".

*** If the "Highest Number Previously Paid For" IN THIS SPACE is less than 3, enter "3".

The "Highest Number Previously Paid For" (Total or Independent) is the highest number found in the appropriate box in column 1.

Legal Instrument Examiner:
/GLORIA ANTHONY/

This collection of information is required by 37 CFR 1.16. The information is required to obtain or retain a benefit by the public which is to file (and by the USPTO to process) an application. Confidentiality is governed by 35 U.S.C. 122 and 37 CFR 1.14. This collection is estimated to take 12 minutes to complete, including gathering, preparing, and submitting the completed application form to the USPTO. Time will vary depending upon the individual case. Any comments on the amount of time you require to complete this form and/or suggestions for reducing this burden, should be sent to the Chief Information Officer, U.S. Patent and Trademark Office, U.S. Department of Commerce, P.O. Box 1450, Alexandria, VA 22313-1450. DO NOT SEND FEES OR COMPLETED FORMS TO THIS ADDRESS. **SEND TO: Commissioner for Patents, P.O. Box 1450, Alexandria, VA 22313-1450.**

If you need assistance in completing the form, call 1-800-PTO-9199 and select option 2.

RECEIVED
CENTRAL FAX CENTER
NOV 09 2010

Attorney Docket No.: 802-001C

IN THE UNITED STATES PATENT AND TRADEMARK OFFICE

In Re Application of: Krumel	)	
Serial No.: 12/807,641	)	
Filed: September 10, 2010	)	Examiner: Simitoski, Michael J
For: Network Data Transfer Systems and Methods	)	Group Art Unit: 2439

Commissioner for Patents
P.O. Box 1450
Alexandria, VA 22313-1450

CHANGE OF CORRESPONDENCE ADDRESS AND CONTACT INFORMATION

Dear Commissioner,

Effective immediately, please change the correspondence address and contact information for the above-identified (or any related patents or applications) to the following:

Alan R. Loudermilk
Loudermilk & Associates
511 N. Washington Avenue
Marshall, Texas 75670
Phn 903-407-4213
Fax 877-347-8075
alan@loudermilk.com

Please contact the undersigned if there are any questions regarding this application or this change of address.

Respectfully submitted

Alan R. Loudermilk
Registration No. 32,788
Attorney for Applicant(s)

November 8, 2010
Loudermilk & Associates
511 N. Washington Avenue
Marshall, Texas 75670
903-407-4213

I hereby certify that the foregoing is being faxed to the Commissioner for Patents on the date indicated above.

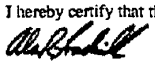

Organization _____ Bldg./Room _____

UNITED STATES PATENT AND TRADEMARK OFFICE
P.O. Box 1450
Alexandria, VA. 22313–1450
If Undeliverable Return In Ten Days

Official Business
Penalty For Private Use, $300

AN EQUAL OPPORTUNITY EMPLOYER

016H26521598
$00.61⁰
10/20/2010
Mailed From 22206
US POSTAGE
Hasler

NIXIE 351 DE 1 00 10/26/10
RETURN TO SENDER
NOT DELIVERABLE AS ADDRESSED
UNABLE TO FORWARD
BC: 22313145050 *0117-00043-20-36

22313@1450
22313@1450

CISCO SYSTEMS, INC. / Page 182 of 256
Ex.1002

OPAP IAP6
OCT 2 9 2010
PATENT & TRADEMARK OFFICE

UNITED STATES PATENT AND TRADEMARK OFFICE

UNITED STATES DEPARTMENT OF COMMERCE
United States Patent and Trademark Office
Address: COMMISSIONER FOR PATENTS
P.O. Box 1450
Alexandria, Virginia 22313-1450
www.uspto.gov

APPLICATION NUMBER	FILING or 371(c) DATE	GRP ART UNIT	FIL FEE REC'D	ATTY.DOCKET.NO	TOT CLAIMS	IND CLAIMS
12/807,641	09/10/2010	2439	0.00	802-001C	66	2

CONFIRMATION NO. 3474

Loudermilk & Associates
Suite B
10950 N. Blaney Avenue
Cupertino, CA 95014

FILING RECEIPT

Date Mailed: 10/20/2010

Receipt is acknowledged of this non-provisional patent application. The application will be taken up for examination in due course. Applicant will be notified as to the results of the examination. Any correspondence concerning the application must include the following identification information: the U.S. APPLICATION NUMBER, FILING DATE, NAME OF APPLICANT, and TITLE OF INVENTION. Fees transmitted by check or draft are subject to collection. Please verify the accuracy of the data presented on this receipt. **If an error is noted on this Filing Receipt, please submit a written request for a Filing Receipt Correction. Please provide a copy of this Filing Receipt with the changes noted thereon. If you received a "Notice to File Missing Parts" for this application, please submit any corrections to this Filing Receipt with your reply to the Notice. When the USPTO processes the reply to the Notice, the USPTO will generate another Filing Receipt incorporating the requested corrections**

Applicant(s)

Andrew K. Krumel, San Jose, CA;

Power of Attorney: None

Domestic Priority data as claimed by applicant

This application is a CON of 11/374,465 03/13/2006
which is a CON of 09/611,775 07/07/2000 PAT 7,013,482

Foreign Applications

If Required, Foreign Filing License Granted: 10/15/2010

The country code and number of your priority application, to be used for filing abroad under the Paris Convention, is **US 12/807,641**

Projected Publication Date: To Be Determined - pending completion of Missing Parts

Non-Publication Request: No

Early Publication Request: No
**** SMALL ENTITY ****

Title

Real time firewall/data protection systems and methods

Preliminary Class

726

PROTECTING YOUR INVENTION OUTSIDE THE UNITED STATES

Since the rights granted by a U.S. patent extend only throughout the territory of the United States and have no effect in a foreign country, an inventor who wishes patent protection in another country must apply for a patent in a specific country or in regional patent offices. Applicants may wish to consider the filing of an international application under the Patent Cooperation Treaty (PCT). An international (PCT) application generally has the same effect as a regular national patent application in each PCT-member country. The PCT process **simplifies** the filing of patent applications on the same invention in member countries, but **does not result** in a grant of "an international patent" and does not eliminate the need of applicants to file additional documents and fees in countries where patent protection is desired.

Almost every country has its own patent law, and a person desiring a patent in a particular country must make an application for patent in that country in accordance with its particular laws. Since the laws of many countries differ in various respects from the patent law of the United States, applicants are advised to seek guidance from specific foreign countries to ensure that patent rights are not lost prematurely.

Applicants also are advised that in the case of inventions made in the United States, the Director of the USPTO must issue a license before applicants can apply for a patent in a foreign country. The filing of a U.S. patent application serves as a request for a foreign filing license. The application's filing receipt contains further information and guidance as to the status of applicant's license for foreign filing.

Applicants may wish to consult the USPTO booklet, "General Information Concerning Patents" (specifically, the section entitled "Treaties and Foreign Patents") for more information on timeframes and deadlines for filing foreign patent applications. The guide is available either by contacting the USPTO Contact Center at 800-786-9199, or it can be viewed on the USPTO website at http://www.uspto.gov/web/offices/pac/doc/general/index.html.

For information on preventing theft of your intellectual property (patents, trademarks and copyrights), you may wish to consult the U.S. Government website, http://www.stopfakes.gov. Part of a Department of Commerce initiative, this website includes self-help "toolkits" giving innovators guidance on how to protect intellectual property in specific countries such as China, Korea and Mexico. For questions regarding patent enforcement issues, applicants may call the U.S. Government hotline at 1-866-999-HALT (1-866-999-4158).

LICENSE FOR FOREIGN FILING UNDER

Title 35, United States Code, Section 184

Title 37, Code of Federal Regulations, 5.11 & 5.15

GRANTED

The applicant has been granted a license under 35 U.S.C. 184, if the phrase "IF REQUIRED, FOREIGN FILING LICENSE GRANTED" followed by a date appears on this form. Such licenses are issued in all applications where the conditions for issuance of a license have been met, regardless of whether or not a license may be required as

set forth in 37 CFR 5.15. The scope and limitations of this license are set forth in 37 CFR 5.15(a) unless an earlier license has been issued under 37 CFR 5.15(b). The license is subject to revocation upon written notification. The date indicated is the effective date of the license, unless an earlier license of similar scope has been granted under 37 CFR 5.13 or 5.14.

This license is to be retained by the licensee and may be used at any time on or after the effective date thereof unless it is revoked. This license is automatically transferred to any related applications(s) filed under 37 CFR 1.53(d). This license is not retroactive.

The grant of a license does not in any way lessen the responsibility of a licensee for the security of the subject matter as imposed by any Government contract or the provisions of existing laws relating to espionage and the national security or the export of technical data. Licensees should apprise themselves of current regulations especially with respect to certain countries, of other agencies, particularly the Office of Defense Trade Controls, Department of State (with respect to Arms, Munitions and Implements of War (22 CFR 121-128)); the Bureau of Industry and Security, Department of Commerce (15 CFR parts 730-774); the Office of Foreign AssetsControl, Department of Treasury (31 CFR Parts 500+) and the Department of Energy.

NOT GRANTED

No license under 35 U.S.C. 184 has been granted at this time, if the phrase "IF REQUIRED, FOREIGN FILING LICENSE GRANTED" DOES NOT appear on this form. Applicant may still petition for a license under 37 CFR 5.12, if a license is desired before the expiration of 6 months from the filing date of the application. If 6 months has lapsed from the filing date of this application and the licensee has not received any indication of a secrecy order under 35 U.S.C. 181, the licensee may foreign file the application pursuant to 37 CFR 5.15(b).

UNITED STATES PATENT AND TRADEMARK OFFICE

UNITED STATES DEPARTMENT OF COMMERCE
United States Patent and Trademark Office
Address: COMMISSIONER FOR PATENTS
P.O. Box 1450
Alexandria, Virginia 22313-1450
www.uspto.gov

APPLICATION NUMBER	FILING OR 371(C) DATE	FIRST NAMED APPLICANT	ATTY. DOCKET NO./TITLE
12/807,641	09/10/2010	Andrew K. Krumel	802-001C

CONFIRMATION NO. 3474

Loudermilk & Associates
Suite B
10950 N. Blaney Avenue
Cupertino, CA 95014

FORMALITIES LETTER

OC000000044025811

Date Mailed: 10/20/2010

NOTICE TO FILE MISSING PARTS OF NONPROVISIONAL APPLICATION

FILED UNDER 37 CFR 1.53(b)

Filing Date Granted

Items Required To Avoid Abandonment:

An application number and filing date have been accorded to this application. The item(s) indicated below, however, are missing. Applicant is given **TWO MONTHS** from the date of this Notice within which to file all required items and pay any fees required below to avoid abandonment. Extensions of time may be obtained by filing a petition accompanied by the extension fee under the provisions of 37 CFR 1.136(a).

- The statutory basic filing fee is missing.
  *Applicant must submit $**165** to complete the basic filing fee for a small entity.*
- The oath or declaration is unsigned.

The following item(s) appear to have been **omitted** from the application:

- Figure(s) **5** described in the specification.

Applicant must reply to this notice within the time period set forth in this notice to avoid abandonment of this application. Applicant must select one of the three following options and the reply must comply with the requirements set forth in the selected option and any other requirements set forth in this notice. The reply should also indicate which option applicant has selected.

I. **Petition for date of deposit:** Should applicant contend that the above-noted omitted item(s) was in fact deposited in the U.S. Patent and Trademark Office (USPTO) with the nonprovisional application papers, a copy of this Notice and a petition (and $400.00 petition fee *(37 CFR 1.17(f))*) with evidence of such deposit **must** be filed within **TWO MONTHS** of the date of this Notice. The petition fee will be refunded if it is determined that the item(s) was received by the USPTO. **THIS TWO MONTH PERIOD IS EXTENDABLE UNDER 37 CFR 1.136(a) or (b).**

II. **Petition for later filing date:** Should applicant desire to supply the omitted item(s) and accept the date that such omitted item(s) was filed in the USPTO as the filing date of the above-identified application, a copy of this Notice, the omitted item(s) (with a supplemental oath or declaration in compliance with 37 CFR 1.63 and 1.64 referring to such items), and a petition under 37 CFR 1.182 (with the $400.00 petition fee *(37 CFR 1.17(f))* requesting the later filing date **must** be filed within **TWO MONTHS** of the date of this Notice. **THIS TWO MONTH PERIOD IS EXTENDABLE UNDER 37 CFR 1.136(a) or (b).**
Applicant is advised that generally the filing fee required for an application is the filing fee in effect on the filing date accorded the application and that payment of the requisite basic filing fee on a date later than the filing date

of the application requires payment of a surcharge (37 CFR 1.16(f)). To avoid processing delays and payment of a surcharge, applicant should submit any balance due for the requisite filing fee based on the later filing date being requested when submitting the omitted item(s) and the petition (and petition fee) requesting the later filing date.

III. Acceptance of application as deposited: Applicant may accept the application as deposited in the USPTO by filing an appropriate amendment as set forth in either (A) or (B) below within **TWO MONTHS** of the date of this Notice. **THIS TWO MONTH PERIOD IS EXTENDABLE UNDER 37 CFR 1.136(a) or (b)** . The application will maintain a filing date as of the date of deposit of the application papers in the USPTO, and original application papers (i.e., the original disclosure of the invention) will include only those application papers present in the USPTO on the date of deposit. A petition is not required for this option.

(A) If applicant wants to accept the application as deposited without adding the subject matter that was in the omitted item (e.g., a missing page or figure), applicant is required to submit one or more of the following items without adding any new matter (see 35 U.S.C. 132(a)):

1. For a missing page of the specification,
   a) a substitute specification including claims that amends the specification to renumber the pages consecutively and cancels any incomplete sentences, and
   b) a statement that the substitute specification includes no new matter, in compliance with 37 CFR 1.121(b)(3) and 1.125;
2. For a missing figure of the drawings,
   a) replacement drawing sheets in compliance with 37 CFR 1.121(d) to renumber the drawing figures consecutively (if necessary),
   b) a substitute specification excluding claims that amends the specification to cancel any references to any omitted drawing(s) and corrects the references in the specification to the drawing figures to correspond with any relabeled drawing figures, and
   c) a statement that the substitute specification includes no new matter, in compliance with 37 CFR 1.121(b)(3) and 1.125;
3. For a missing page of the claim listing only, a replacement claim listing with the claims renumbered consecutively or, if amendment to the claims is also necessary, then a complete claim listing in compliance with 37 CFR 1.121(c);
4. For a missing or unreadable compact disc,
   a) a substitute specification (excluding the claims) deleting the reference to the compact disc and the files contained on the compact disc, and
   b) a statement that the substitute specification includes no new matter, in compliance with 37 CFR 1.121(b)(3) and 1.125; and
5. For a missing or unreadable file submitted on a compact disc,
   a) a substitute specification (excluding the claims) deleting the reference to the missing or unreadable file, and a statement that the substitute specification includes no new matter, in compliance with 37 CFR 1.121(b)(3) and 1.125; and
   b) a replacement transmittal letter listing all of the files except the missing or unreadable file in compliance with 37 CFR 1.52(e)(3)(ii).

(B) Alternatively, if applicant wants to accept the application as deposited but wishes to add the subject matter in the omitted item (e.g., a missing page or figure) by relying on an incorporation by reference under 37 CFR 1.57 or other portions of the original disclosure, applicant is required to submit one or more of the following items without adding any new matter (see 35 U.S.C. 132(a)):

1. To add the subject matter in a missing page of specification,
   a) a substitute specification excluding claims and
   b) a statement that the substitute specification includes no new matter, in compliance with 37 CFR 1.121(b)(3) and 1.125;
2. To add a missing figure of the drawings, new and replacement drawing sheets in compliance with 37 CFR 1.121(d);

3. To add the subject matter in a missing page of the claim listing, a complete claim listing in compliance with 37 CFR 1.121(c) (e.g., a claim in the missing page should be submitted as a new claim);
4. To add the subject matter in a missing or unreadable compact disc,
   a) a replacement compact disc and a duplicate copy of the compact disc, in compliance with 37 CFR 1.52(e); and
   b) a statement that the replacement compact disc contains no new matter in compliance with 37 CFR 1.52(e)(4); and,
5. To add the subject matter in a missing or unreadable file submitted on a compact disc,
   a) a replacement compact disc that contains all of the files listed in the specification including the missing or unreadable file and a duplicate copy of the compact disc, in compliance with 37 CFR 1.52(e); and
   b) a statement that the replacement compact disc contains no new matter in compliance with 37 CFR 1.52(e)(4).

If applicant is relying on an incorporation by reference under 37 CFR 1.57 to add the omitted subject matter, then applicant must also comply with the requirements of 37 CFR 1.57.

Applicant is cautioned that correction of the above items may cause the specification and drawings page count to exceed 100 pages. If the specification and drawings exceed 100 pages, applicant will need to submit the required application size fee.

The applicant needs to satisfy supplemental fees problems indicated below.

The required item(s) identified below must be timely submitted to avoid abandonment:

- Additional claim fees of $**1196** as a small entity, including any required multiple dependent claim fee, are required. Applicant must submit the additional claim fees or cancel the additional claims for which fees are due.
- To avoid abandonment, a surcharge (for late submission of filing fee, search fee, examination fee or oath or declaration) as set forth in 37 CFR 1.16(f) of $**65** for a small entity in compliance with 37 CFR 1.27, must be submitted with the missing items identified in this notice.

SUMMARY OF FEES DUE:

Total additional fee(s) required for this application is $**1806** for a small entity
- $**165** Statutory basic filing fee.
- $**65** Surcharge.
- The application search fee has not been paid. Applicant must submit $**270** to complete the search fee.
- The application examination fee has not been paid. Applicant must submit $**110** to complete the examination fee for a small entity in compliance with 37 CFR 1.27.
- Total additional claim fee(s) for this application is $**1196**
  - $**1196** for **46** total claims over 20.

Replies should be mailed to:

Mail Stop Missing Parts
Commissioner for Patents
P.O. Box 1450
Alexandria VA 22313-1450

Registered users of EFS-Web may alternatively submit their reply to this notice via EFS-Web.
https://sportal.uspto.gov/authenticate/AuthenticateUserLocalEPF.html

For more information about EFS-Web please call the USPTO Electronic Business Center at **1-866-217-9197** or visit our website at http://www.uspto.gov/ebc.

If you are not using EFS-Web to submit your reply, you must include a copy of this notice.

/ldvan/

Office of Data Management, Application Assistance Unit (571) 272-4000, or (571) 272-4200, or 1-888-786-0101

UNITED STATES PATENT AND TRADEMARK OFFICE

UNITED STATES DEPARTMENT OF COMMERCE
United States Patent and Trademark Office
Address: COMMISSIONER FOR PATENTS
P.O. Box 1450
Alexandria, Virginia 22313-1450
www.uspto.gov

APPLICATION NUMBER	FILING or 371(c) DATE	GRP ART UNIT	FIL FEE REC'D	ATTY.DOCKET.NO	TOT CLAIMS	IND CLAIMS
12/807,641	09/10/2010	2439	0.00	802-001C	66	2

CONFIRMATION NO. 3474

Loudermilk & Associates
Suite B
10950 N. Blaney Avenue
Cupertino, CA 95014

FILING RECEIPT

Date Mailed: 10/20/2010

Receipt is acknowledged of this non-provisional patent application. The application will be taken up for examination in due course. Applicant will be notified as to the results of the examination. Any correspondence concerning the application must include the following identification information: the U.S. APPLICATION NUMBER, FILING DATE, NAME OF APPLICANT, and TITLE OF INVENTION. Fees transmitted by check or draft are subject to collection. Please verify the accuracy of the data presented on this receipt. **If an error is noted on this Filing Receipt, please submit a written request for a Filing Receipt Correction. Please provide a copy of this Filing Receipt with the changes noted thereon. If you received a "Notice to File Missing Parts" for this application, please submit any corrections to this Filing Receipt with your reply to the Notice. When the USPTO processes the reply to the Notice, the USPTO will generate another Filing Receipt incorporating the requested corrections**

Applicant(s)

Andrew K. Krumel, San Jose, CA;

Power of Attorney: None

Domestic Priority data as claimed by applicant

This application is a CON of 11/374,465 03/13/2006
which is a CON of 09/611,775 07/07/2000 PAT 7,013,482

Foreign Applications

If Required, Foreign Filing License Granted: 10/15/2010

The country code and number of your priority application, to be used for filing abroad under the Paris Convention, is **US 12/807,641**

Projected Publication Date: To Be Determined - pending completion of Missing Parts

Non-Publication Request: No

Early Publication Request: No
**** SMALL ENTITY ****

Title

Real time firewall/data protection systems and methods

Preliminary Class

726

PROTECTING YOUR INVENTION OUTSIDE THE UNITED STATES

Since the rights granted by a U.S. patent extend only throughout the territory of the United States and have no effect in a foreign country, an inventor who wishes patent protection in another country must apply for a patent in a specific country or in regional patent offices. Applicants may wish to consider the filing of an international application under the Patent Cooperation Treaty (PCT). An international (PCT) application generally has the same effect as a regular national patent application in each PCT-member country. The PCT process **simplifies** the filing of patent applications on the same invention in member countries, but **does not result** in a grant of "an international patent" and does not eliminate the need of applicants to file additional documents and fees in countries where patent protection is desired.

Almost every country has its own patent law, and a person desiring a patent in a particular country must make an application for patent in that country in accordance with its particular laws. Since the laws of many countries differ in various respects from the patent law of the United States, applicants are advised to seek guidance from specific foreign countries to ensure that patent rights are not lost prematurely.

Applicants also are advised that in the case of inventions made in the United States, the Director of the USPTO must issue a license before applicants can apply for a patent in a foreign country. The filing of a U.S. patent application serves as a request for a foreign filing license. The application's filing receipt contains further information and guidance as to the status of applicant's license for foreign filing.

Applicants may wish to consult the USPTO booklet, "General Information Concerning Patents" (specifically, the section entitled "Treaties and Foreign Patents") for more information on timeframes and deadlines for filing foreign patent applications. The guide is available either by contacting the USPTO Contact Center at 800-786-9199, or it can be viewed on the USPTO website at http://www.uspto.gov/web/offices/pac/doc/general/index.html.

For information on preventing theft of your intellectual property (patents, trademarks and copyrights), you may wish to consult the U.S. Government website, http://www.stopfakes.gov. Part of a Department of Commerce initiative, this website includes self-help "toolkits" giving innovators guidance on how to protect intellectual property in specific countries such as China, Korea and Mexico. For questions regarding patent enforcement issues, applicants may call the U.S. Government hotline at 1-866-999-HALT (1-866-999-4158).

LICENSE FOR FOREIGN FILING UNDER

Title 35, United States Code, Section 184

Title 37, Code of Federal Regulations, 5.11 & 5.15

GRANTED

The applicant has been granted a license under 35 U.S.C. 184, if the phrase "IF REQUIRED, FOREIGN FILING LICENSE GRANTED" followed by a date appears on this form. Such licenses are issued in all applications where the conditions for issuance of a license have been met, regardless of whether or not a license may be required as

set forth in 37 CFR 5.15. The scope and limitations of this license are set forth in 37 CFR 5.15(a) unless an earlier license has been issued under 37 CFR 5.15(b). The license is subject to revocation upon written notification. The date indicated is the effective date of the license, unless an earlier license of similar scope has been granted under 37 CFR 5.13 or 5.14.

This license is to be retained by the licensee and may be used at any time on or after the effective date thereof unless it is revoked. This license is automatically transferred to any related applications(s) filed under 37 CFR 1.53(d). This license is not retroactive.

The grant of a license does not in any way lessen the responsibility of a licensee for the security of the subject matter as imposed by any Government contract or the provisions of existing laws relating to espionage and the national security or the export of technical data. Licensees should apprise themselves of current regulations especially with respect to certain countries, of other agencies, particularly the Office of Defense Trade Controls, Department of State (with respect to Arms, Munitions and Implements of War (22 CFR 121-128)); the Bureau of Industry and Security, Department of Commerce (15 CFR parts 730-774); the Office of Foreign AssetsControl, Department of Treasury (31 CFR Parts 500+) and the Department of Energy.

NOT GRANTED

No license under 35 U.S.C. 184 has been granted at this time, if the phrase "IF REQUIRED, FOREIGN FILING LICENSE GRANTED" DOES NOT appear on this form. Applicant may still petition for a license under 37 CFR 5.12, if a license is desired before the expiration of 6 months from the filing date of the application. If 6 months has lapsed from the filing date of this application and the licensee has not received any indication of a secrecy order under 35 U.S.C. 181, the licensee may foreign file the application pursuant to 37 CFR 5.15(b).

UNITED STATES PATENT AND TRADEMARK OFFICE

UNITED STATES DEPARTMENT OF COMMERCE
United States Patent and Trademark Office
Address: COMMISSIONER FOR PATENTS
P.O. Box 1450
Alexandria, Virginia 22313-1450
www.uspto.gov

APPLICATION NUMBER	FILING OR 371(C) DATE	FIRST NAMED APPLICANT	ATTY. DOCKET NO./TITLE
12/807,641	09/10/2010	Andrew K. Krumel	802-001C

CONFIRMATION NO. 3474

Loudermilk & Associates
Suite B
10950 N. Blaney Avenue
Cupertino, CA 95014

FORMALITIES LETTER

OC000000044025811

Date Mailed: 10/20/2010

NOTICE TO FILE MISSING PARTS OF NONPROVISIONAL APPLICATION

FILED UNDER 37 CFR 1.53(b)

Filing Date Granted

Items Required To Avoid Abandonment:

An application number and filing date have been accorded to this application. The item(s) indicated below, however, are missing. Applicant is given **TWO MONTHS** from the date of this Notice within which to file all required items and pay any fees required below to avoid abandonment. Extensions of time may be obtained by filing a petition accompanied by the extension fee under the provisions of 37 CFR 1.136(a).

- The statutory basic filing fee is missing.
  *Applicant must submit $**165** to complete the basic filing fee for a small entity.*
- The oath or declaration is unsigned.

The following item(s) appear to have been **omitted** from the application:

- Figure(s) **5** described in the specification.

Applicant must reply to this notice within the time period set forth in this notice to avoid abandonment of this application. Applicant must select one of the three following options and the reply must comply with the requirements set forth in the selected option and any other requirements set forth in this notice. The reply should also indicate which option applicant has selected.

I. Petition for date of deposit: Should applicant contend that the above-noted omitted item(s) was in fact deposited in the U.S. Patent and Trademark Office (USPTO) with the nonprovisional application papers, a copy of this Notice and a petition (and $400.00 petition fee *(37 CFR 1.17(f))*) with evidence of such deposit **must** be filed within **TWO MONTHS** of the date of this Notice. The petition fee will be refunded if it is determined that the item(s) was received by the USPTO. **THIS TWO MONTH PERIOD IS EXTENDABLE UNDER 37 CFR 1.136(a) or (b).**

II. Petition for later filing date: Should applicant desire to supply the omitted item(s) and accept the date that such omitted item(s) was filed in the USPTO as the filing date of the above-identified application, a copy of this Notice, the omitted item(s) (with a supplemental oath or declaration in compliance with 37 CFR 1.63 and 1.64 referring to such items), and a petition under 37 CFR 1.182 (with the $400.00 petition fee *(37 CFR 1.17(f))* requesting the later filing date **must** be filed within **TWO MONTHS** of the date of this Notice. **THIS TWO MONTH PERIOD IS EXTENDABLE UNDER 37 CFR 1.136(a) or (b).**
Applicant is advised that generally the filing fee required for an application is the filing fee in effect on the filing date accorded the application and that payment of the requisite basic filing fee on a date later than the filing date

of the application requires payment of a surcharge (37 CFR 1.16(f)). To avoid processing delays and payment of a surcharge, applicant should submit any balance due for the requisite filing fee based on the later filing date being requested when submitting the omitted item(s) and the petition (and petition fee) requesting the later filing date.

III. Acceptance of application as deposited: Applicant may accept the application as deposited in the USPTO by filing an appropriate amendment as set forth in either (A) or (B) below within **TWO MONTHS** of the date of this Notice. **THIS TWO MONTH PERIOD IS EXTENDABLE UNDER 37 CFR 1.136(a) or (b)** . The application will maintain a filing date as of the date of deposit of the application papers in the USPTO, and original application papers (i.e., the original disclosure of the invention) will include only those application papers present in the USPTO on the date of deposit. A petition is not required for this option.

(A) If applicant wants to accept the application as deposited without adding the subject matter that was in the omitted item (e.g., a missing page or figure), applicant is required to submit one or more of the following items without adding any new matter (see 35 U.S.C. 132(a)):

1. For a missing page of the specification,
   a) a substitute specification including claims that amends the specification to renumber the pages consecutively and cancels any incomplete sentences, and
   b) a statement that the substitute specification includes no new matter, in compliance with 37 CFR 1.121(b)(3) and 1.125;
2. For a missing figure of the drawings,
   a) replacement drawing sheets in compliance with 37 CFR 1.121(d) to renumber the drawing figures consecutively (if necessary),
   b) a substitute specification excluding claims that amends the specification to cancel any references to any omitted drawing(s) and corrects the references in the specification to the drawing figures to correspond with any relabeled drawing figures, and
   c) a statement that the substitute specification includes no new matter, in compliance with 37 CFR 1.121(b)(3) and 1.125;
3. For a missing page of the claim listing only, a replacement claim listing with the claims renumbered consecutively or, if amendment to the claims is also necessary, then a complete claim listing in compliance with 37 CFR 1.121(c);
4. For a missing or unreadable compact disc,
   a) a substitute specification (excluding the claims) deleting the reference to the compact disc and the files contained on the compact disc, and
   b) a statement that the substitute specification includes no new matter, in compliance with 37 CFR 1.121(b)(3) and 1.125; and
5. For a missing or unreadable file submitted on a compact disc,
   a) a substitute specification (excluding the claims) deleting the reference to the missing or unreadable file, and a statement that the substitute specification includes no new matter, in compliance with 37 CFR 1.121(b)(3) and 1.125; and
   b) a replacement transmittal letter listing all of the files except the missing or unreadable file in compliance with 37 CFR 1.52(e)(3)(ii).

(B) Alternatively, if applicant wants to accept the application as deposited but wishes to add the subject matter in the omitted item (e.g., a missing page or figure) by relying on an incorporation by reference under 37 CFR 1.57 or other portions of the original disclosure, applicant is required to submit one or more of the following items without adding any new matter (see 35 U.S.C. 132(a)):

1. To add the subject matter in a missing page of specification,
   a) a substitute specification excluding claims and
   b) a statement that the substitute specification includes no new matter, in compliance with 37 CFR 1.121(b)(3) and 1.125;
2. To add a missing figure of the drawings, new and replacement drawing sheets in compliance with 37 CFR 1.121(d);

3. To add the subject matter in a missing page of the claim listing, a complete claim listing in compliance with 37 CFR 1.121(c) (e.g., a claim in the missing page should be submitted as a new claim);
4. To add the subject matter in a missing or unreadable compact disc,
   a) a replacement compact disc and a duplicate copy of the compact disc, in compliance with 37 CFR 1.52(e); and
   b) a statement that the replacement compact disc contains no new matter in compliance with 37 CFR 1.52(e)(4); and,
5. To add the subject matter in a missing or unreadable file submitted on a compact disc,
   a) a replacement compact disc that contains all of the files listed in the specification including the missing or unreadable file and a duplicate copy of the compact disc, in compliance with 37 CFR 1.52(e); and
   b) a statement that the replacement compact disc contains no new matter in compliance with 37 CFR 1.52(e)(4).

If applicant is relying on an incorporation by reference under 37 CFR 1.57 to add the omitted subject matter, then applicant must also comply with the requirements of 37 CFR 1.57.

Applicant is cautioned that correction of the above items may cause the specification and drawings page count to exceed 100 pages. If the specification and drawings exceed 100 pages, applicant will need to submit the required application size fee.

The applicant needs to satisfy supplemental fees problems indicated below.

The required item(s) identified below must be timely submitted to avoid abandonment:

- Additional claim fees of $**1196** as a small entity, including any required multiple dependent claim fee, are required. Applicant must submit the additional claim fees or cancel the additional claims for which fees are due.
- To avoid abandonment, a surcharge (for late submission of filing fee, search fee, examination fee or oath or declaration) as set forth in 37 CFR 1.16(f) of $**65** for a small entity in compliance with 37 CFR 1.27, must be submitted with the missing items identified in this notice.

SUMMARY OF FEES DUE:

Total additional fee(s) required for this application is $**1806** for a small entity
- $**165** Statutory basic filing fee.
- $**65** Surcharge.
- The application search fee has not been paid. Applicant must submit $**270** to complete the search fee.
- The application examination fee has not been paid. Applicant must submit $**110** to complete the examination fee for a small entity in compliance with 37 CFR 1.27.
- Total additional claim fee(s) for this application is $**1196**
  - $**1196** for **46** total claims over 20.

Replies should be mailed to:

Mail Stop Missing Parts
Commissioner for Patents
P.O. Box 1450
Alexandria VA 22313-1450

Registered users of EFS-Web may alternatively submit their reply to this notice via EFS-Web.
https://sportal.uspto.gov/authenticate/AuthenticateUserLocalEPF.html

For more information about EFS-Web please call the USPTO Electronic Business Center at **1-866-217-9197** or visit our website at http://www.uspto.gov/ebc.

If you are not using EFS-Web to submit your reply, you must include a copy of this notice.

/ldvan/

Office of Data Management, Application Assistance Unit (571) 272-4000, or (571) 272-4200, or 1-888-786-0101

U.S. PTO
12/807641
09/10/2010

091010 16191 U.S. PTO

PTO/SB/05 (08-08)
Approved for use through 09/30/2010. OMB 0651-0032
U.S. Patent and Trademark Office. U.S. DEPARTMENT OF COMMERCE
Under the Paperwork Reduction Act of 1995, no persons are required to respond to a collection of information unless it displays a valid OMB control number.

UTILITY PATENT APPLICATION TRANSMITTAL

(Only for new nonprovisional applications under 37 CFR 1.53(b))

Attorney Docket No.	802-001C
First Inventor	KRUMEL
Title	REAL TIME FIREWALL/DATA PROT.
Express Mail Label No.	EL 751999378US

APPLICATION ELEMENTS

See MPEP chapter 600 concerning utility patent application contents.

1. ☐ **Fee Transmittal Form** (e.g., PTO/SB/17)
2. ☒ **Applicant claims small entity status.** See 37 CFR 1.27.
3. ☒ **Specification** [*Total Pages* 40]
   Both the claims and abstract must start on a new page
   (For information on the preferred arrangement, see MPEP 608.01(a))
4. ☒ **Drawing(s)** (*35 U.S.C. 113*) [*Total Sheets* 14]
5. **Oath or Declaration** [*Total Sheets* _____]
   a. ☐ Newly executed (original or copy)
   b. ☒ A copy from a prior application (37 CFR 1.63(d))
   (for continuation/divisional with Box 18 completed)
   i. ☐ DELETION OF INVENTOR(S)
   Signed statement attached deleting inventor(s) name in the prior application, see 37 CFR 1.63(d)(2) and 1.33(b).
6. ☐ **Application Data Sheet.** See 37 CFR 1.76
7. ☐ **CD-ROM or CD-R** in duplicate, large table or Computer Program *(Appendix)*
   ☐ Landscape Table on CD
8. **Nucleotide and/or Amino Acid Sequence Submission**
   (if applicable, items a. – c. are required)
   a. ☐ Computer Readable Form (CRF)
   b. Specification Sequence Listing on:
      i. ☐ CD-ROM or CD-R (2 copies); or
      ii. ☐ Paper
   c. ☐ Statements verifying identity of above copies

ADDRESS TO:

Commissioner for Patents
P.O. Box 1450
Alexandria VA 22313-1450

ACCOMPANYING APPLICATION PARTS

9. ☐ **Assignment Papers** (cover sheet & document(s))
   Name of Assignee _____
10. ☐ **37 CFR 3.73(b) Statement** *(when there is an assignee)* ☐ **Power of Attorney**
11. ☐ **English Translation Document** *(if applicable)*
12. ☐ **Information Disclosure Statement** (PTO/SB/08 or PTO-1449)
    ☐ Copies of citations attached
13. ☐ **Preliminary Amendment**
14. ☐ **Return Receipt Postcard** (MPEP 503)
    (Should be specifically itemized)
15. ☐ **Certified Copy of Priority Document(s)**
    (if foreign priority is claimed)
16. ☐ **Nonpublication Request** under 35 U.S.C. 122(b)(2)(B)(i). Applicant must attach form PTO/SB/35 or equivalent.
17. ☐ Other: _____

18. If a CONTINUING APPLICATION, *check appropriate box, and supply the requisite information below and in the first sentence of the specification following the title, or in an Application Data Sheet under 37 CFR 1.76:*

☒ Continuation ☐ Divisional ☐ Continuation-in-part (CIP) of prior application No.: 11/374,465

Prior application information: HEREBY INCORPORATED BY REFERENCE *Examiner* SIMITOSKI *Art Unit:* 2439

19. CORRESPONDENCE ADDRESS

☐ The address associated with Customer Number: _____ **OR** ☐ Correspondence address below

Name	ALAN LOUDERMILK				
Address	LOUDERMILK + ASSOCIATES PO BOX 3607				
City	LOS ALTOS	State	CA	Zip Code	94024
Country	US	Telephone	~~408~~ 312618-6500	Email	alan@loudermilk.com

Signature		Date	9/10/10
Name (Print/Type)	ALAN P. LOUDERMILK	Registration No. (Attorney/Agent)	32,788

This collection of information is required by 37 CFR 1.53(b). The information is required to obtain or retain a benefit by the public which is to file (and by the USPTO to process) an application. Confidentiality is governed by 35 U.S.C. 122 and 37 CFR 1.11 and 1.14. This collection is estimated to take 12 minutes to complete, including gathering, preparing, and submitting the completed application form to the USPTO. Time will vary depending upon the individual case. Any comments on the amount of time you require to complete this form and/or suggestions for reducing this burden, should be sent to the Chief Information Officer, U.S. Patent and Trademark Office, U.S. Department of Commerce, P.O. Box 1450, Alexandria, VA 22313-1450. DO NOT SEND FEES OR COMPLETED FORMS TO THIS ADDRESS. **SEND TO: Commissioner for Patents, P.O. Box 1450, Alexandria, VA 22313-1450.**

If you need assistance in completing the form, call 1-800-PTO-9199 and select option 2.

OPAP
SEP 10 2010
IAP11
PATENT & TRADEMARK OFFICE

Attorney Docket No.: 802-001B

IN THE UNITED STATES PATENT AND TRADEMARK OFFICE

In Re Application of: Krumel	)	
Serial No.: 11/374,465	)	
Filed: March 13, 2006	)	Examiner: Simitoski, Michael J
For: Network Data Transfer Systems and Methods	)	Group Art Unit: 2439

COPY

Commissioner for Patents
P.O. Box 1450
Alexandria, VA 22313-1450

PETITION AND FEE FOR EXTENSION OF TIME UNDER 37 C.F.R. 1.136(a)

Dear Commissioner,

Applicant hereby petitions for a three-month extension of time in order to respond to the office action mailed March 10, 2010. Please charge Deposit Account No. 50-0251 in the amount of $555.00 for the extension fee. A continuation application is being filed under separate cover on even date herewith.

Please charge any additional fees due, or credit any overpayment, to Deposit Account No. 50-0251.

Respectfully submitted

Alan R. Loudermilk
Registration No. 32,788
Attorney for Applicant(s)

COPY

September 10, 2010
Loudermilk & Associates
P.O. Box 3607
Los Altos, CA 94024-0607
408-868-1516

I hereby certify that the foregoing is being faxed via 571-273-8300 to the Commissioner for Patents, P.O. Box 1450, Alexandria, VA 22313-1450, on the date indicated above.

COPY

Attorney Docket No.: 802-001

DECLARATION AND POWER OF ATTORNEY

As a below named inventor, I hereby declare that:

INVENTOR AND SPECIFICATION IDENTIFICATION

My residence, post office address and citizenship are as stated below next to my name. I believe that I am the original, first and sole inventor (*if only one name is listed below*) or an original, first and joint inventor (*if plural names are listed below*) of the subject matter which is claimed and for which a patent is sought on the invention entitled:

REAL TIME FIREWALL/DATA PROTECTION SYSTEMS AND METHODS
TITLE OF INVENTION

the specification of which:

_X_ is attached hereto.

___ was filed on _____ as Application Serial No. _____
and was amended on _____ (*if applicable*).

___ was described and claimed in PCT International Application No._____filed on
_____and amended under PCT Article 19 on _____ (*if any*).

REVIEW OF PAPERS AND ACKNOWLEDGMENT OF DUTY OF CANDOR

I hereby state that I have reviewed and understand the contents of the above identified specification, including the claims, as amended by any amendment referred to above.

I do not know and do not believe that the invention claimed in the above-identified specification was ever known or used in the United States of America before my or our invention thereof, or patented or described in any printed publication in any country before my or our invention thereof or more than one year prior to this application, and that the same was not in public use or on sale in the United States of America more than one year prior to this application.

I acknowledge the duty to disclose to the Patent and Trademark Office information which I know is material to the patentability of this application in accordance with Title 37, Code of Federal Regulations, § 1.56.

FOREIGN APPLICATIONS AND PRIORITY CLAIM

The invention claimed in the above-described specification has not been patented or made the subject of an inventor's certificate issued before the date of this application in any country foreign to the United States of America on an application filed by me or my legal representatives or assigns more than twelve months prior to this application. I hereby claim foreign priority benefits under Title 35, United States Code, § 119 of any foreign application(s) for patent or inventor's certificate or of any PCT international application(s) designating at least one country other than the United States of America listed below and have also identified below any foreign application(s) for patent or inventor's certificate or any PCT international application(s) designating at least

one country other than the United States of America filed by me on the same subject matter having a filing date before that of the application(s) of which priority is claimed.

COUNTRY	APPLICATION NUMBER	DATE OF FILING (day, month, year)	PRIORITY CLAIMED UNDER 37 USC 119
			_Yes _No
			_Yes _No
			_Yes _No
			_Yes _No

DOMESTIC PRIORITY CLAIM

I hereby claim the benefit under Title 35, United States Code, § 120 of any United States patent application(s) listed below and, insofar as this application discloses or claims subject matter in addition to that disclosed in the below listed priority applications, I acknowledge the duty to disclose to the Patent and Trademark Office all information known by me to be material to patentability as defined in Title 37, Code of Federal Regulations, § 1.56 which became available between the filing date(s) of the below-listed prior application(s) and the national or PCT international filing date of this application.

(APPLICATION SERIAL NO.) (FILING DATE) (STATUS: PATENTED, PENDING, ABANDONED)

(APPLICATION SERIAL NO.) (FILING DATE) (STATUS: PATENTED, PENDING, ABANDONED)

POWER OF ATTORNEY

I hereby appoint Alan R. Loudermilk (Reg. No. 32,788), who is registered to practice before the Patent and Trademark Office, as my attorney with full power of substitution and revocation, to prosecute this application, to make alterations or amendments therein, to receive the patent and transact all business in the Patent and Trademark Office connected therewith.

All **CORRESPONDENCE** should be addressed to:

Loudermilk & Associates
10950 N. Blaney Avenue Suite B
Cupertino, CA 95014

All **TELEPHONE INQUIRIES** may be directed to Alan R. Loudermilk at (408) 342-1866.

I hereby declare I have read this Declaration, and that all statements made herein of my own knowledge are true and that all statements made on information and belief are believed to be true; and further that these statements were made with the knowledge that willful false statements and the like so made are punishable by fine or imprisonment, or both, under Section 1001 of Title 18 of the United States Code, and that such willful false statements may jeopardize the validity of the application or any patent issued thereon.

HAND PRINT DATE BEFORE SIGNING

Full name of sole or first joint inventor ANDREW K. KRUMEL Citizenship USA

Inventor's signature _____ Date _____

Residence 3635 Pleasant Knoll Drive, San Jose, CA 95148

Post Office Address 3635 Pleasant Knoll Drive, San Jose, CA 95148

Full name of second joint inventor _____ Citizenship _____

Inventor's signature _____ Date _____

Residence

Post Office Address _____

Full name of third joint inventor _____ Citizenship _____

Inventor's signature Date

Residence _____

Post Office Address _____

Full name of fourth joint inventor _____ Citizenship _____

Inventor's signature _____ Date _____

Residence

Post Office Address _____

Full name of fifth joint inventor _____ Citizenship _____

Inventor's signature _____ Date _____

Residence _____

Post Office Address _____

____ If this line is checked, the signature page is continued on the attached Addendum.

REAL TIME FIREWALL/DATA PROTECTION SYSTEMS AND METHODS

This application is a continuation of U.S. App. Ser. 11/374,465, filed March 13, 2006, which is a continuation of U.S. App. Ser. No. 09/611,775, filed July 7, 2000, now U.S. Patent No. 7,013,482.

Field of the Invention

The present invention relates to computer security and data protection systems and methods, and more particularly to firewall and data protection systems and methods for filtering packets, such as from the Internet, in real time and without packet buffering.

Background of the Invention

The use of the Internet has exploded in recent years. Small and large companies as well as individual users are spending more time with their computers connected to the Internet. With the advent of Internet technologies, such as cable modems, digital subscriber lines, and other "broadband" access devices, users are connecting their computers to the Internet for extended periods of time.

Such extended or "persistent" connection to the Internet brings many advantages to users in immediate access to the content on the Internet through the use of email, search engines, and the like. Unfortunately, however, persistent access to the Internet exposes connected computers to potential security threats, where intruders and "hackers" may compromise proprietary systems, engage in information theft, or take control of the connected computers remotely. With more sophisticated tools at their disposal, hackers pose security and privacy risks to systems with persistent access to the Internet. Such security risks are even present for computers connected to the Internet for limited periods of time (such as through dial-up, modem connections), though to a lesser degree than the extended access computers.

There are currently many different types of firewall systems available on the market, including proxy servers, application gateways, stateful inspection firewalls, and packet filtering firewalls, each of which provides a variety of strategies and services for data protection. Conventional packet filters typically are computers, routers, or ASICs based on general purpose CPUs. They perform their filtering duties by receiving a packet, buffering the data until a determination can be made, and forwarding the packet as applicable for the particular system. For example, a dual-homed, Linux-based filter with two network cards might receive a packet

Ex.1002
CISCO SYSTEMS, INC. / Page 202 of 256

completely, evaluate whether it meets specific criteria, and transmit the packet on the other network card. In another example, a router designed for switch mode routing might begin buffering a packet until a decision is made, then forward the packet on the applicable interface while still receiving the packet. With most packet filters, software is used and data is buffered.

Sophisticated computer users working for medium- to large-sized companies have a variety of relatively expensive protection devices and tools at their disposal. Such devices and tools typically screen data packets received from the Internet with sophisticated software-based filtering techniques. Using relatively complex tools for software analysis, each packet is stored in a buffer and examined sequentially with software-based rules, which results in each packet being either accepted (and passed to the computer) or rejected (and disposed of by the software). This software often requires substantial computer knowledge and experience. Users of such devices and tools typically have an expertise in network administration or a similar field, so they can configure, optimize, and even build the complex filtering and security options provided by the software.

While such devices and tools can be quite effective in providing "firewall" protection for sophisticated users of large office systems, they pose several barriers to unsophisticated users of small office and home systems in the growing SOHO market. Current large office systems are expensive, difficult to set up, and require technical skills. What is needed for SOHO systems is a relatively inexpensive, uncomplicated, "plug and play" type of Internet protection system that can be easily connected and configured by relatively unsophisticated users.

Summary of the Invention

In accordance with the present invention, devices, methods and systems are provided for the filtering of Internet data packets in real time and without packet buffering. A stateful packet filtering hub is provided in accordance with preferred embodiments of the present invention. The present invention also could be implemented as part of a switch or incorporated into a router.

A packet filter is a device that examines network packet headers and related information, and determines whether the packet is allowed into or out of a network. A stateful packet filter, however, extends this concept to include packet data and previous network activity in order to make more intelligent decisions about whether a packet should be allowed into or out of the network. An Ethernet hub is a network device that links multiple network segments together at

Ex.1002
CISCO SYSTEMS, INC. / Page 203 of 256

the medium level (the medium level is just above the physical level, which connects to the network cable), but typically provides no capability for packet-type filtering. As is known, when a hub receives an Ethernet packet on one connection, it forwards the packet to all other links with minimal delay and is accordingly not suitable as a point for making filtering-type decisions. This minimum delay is important since Ethernet networks only work correctly if packets travel between hosts (computers) in a certain amount of time.

In accordance with the present invention, as the data of a packet comes in from one link (port), the packet's electrical signal is reshaped and then transmitted down other links. During this process, however, a filtering decision is made between the time the first bit is received on the incoming port and the time the last bit is transmitted on the outgoing links. During this short interval, a substantial number of filtering rules or checks are performed, resulting in a determination as to whether the packet should or should not be invalidated by the time that the last bit is transmitted. To execute this task, the present invention performs multiple filtering decisions simultaneously: data is received; data is transmitted; and filtering rules are examined in parallel and in real time. For example, on a 100 Mbit/sec Ethernet network, 4 bits are transmitted every 40 nano seconds (at a clock speed of 25 MHz). The present invention makes a filtering decision by performing the rules evaluations simultaneously at the hardware level, preferably with a programmable logic device.

The present invention may employ a variety of networking devices in order to be practical, reliable and efficient. In addition, preferred embodiments of the present invention may include constituent elements of a stateful packet filtering hub, such as microprocessors, controllers, and integrated circuits, in order to perform the real time, packet-filtering, without requiring buffering as with conventional techniques. The present invention preferably is reset, enabled, disabled, configured and/or reconfigured with relatively simple toggles or other physical switches, thereby removing the requirement for a user to be trained in sophisticated computer and network configuration. In accordance with preferred embodiments of the present invention, the system may be controlled and/or configured with simple switch activation(s).

Accordingly, one object of the present invention is to simplify the configuration requirements and filtering tasks of Internet firewall and data protection systems.

Ex.1002
CISCO SYSTEMS, INC. / Page 204 of 256

Another object is to provide a device, method and system for Internet firewall and data protection that does not require the use of CPU-based systems, operating systems, device drivers, or memory bus architecture to buffer packets and sequentially carry out the filtering tasks.

A further object of the present invention is to perform the filtering tasks of Internet firewall protection through the use of hardware components.

Another object is to utilize programmable logic for filtering tasks.

Still another object is to provide a device, method, and system to carry out bitstream filtering tasks in real time.

Yet another object is to perform parallel filtering, where packet data reception, filtering, and transmission are conducted simultaneously.

A further object of the present invention is to perform the filtering tasks relatively faster than current state-of-the-art, software-based firewall/data protection systems.

Another object is to provide a device, method and system for firewall protection without the use of a buffer or temporary storage area for packet data.

Still another object of the present invention is to design a device, method and system that does not require software networking configurations in order to be operational.

A further object of the present invention is to provide a device, method and system for Internet firewall and data security protection that supports partitioning a network between client and server systems.

It is a yet another object of the present invention to provide a device, method and system for Internet firewall and data protection that supports multiple networking ports.

Another object is to maintain stateful filtering support for standard data transmission protocols on a per port basis.

Still another object of is to configure network functionality using predefined toggles or other types of physical switches.

A further object of the present invention is to conduct packet filtering without requiring a MAC address or IP address to perform packet filtering.

Yet another object of the present invention is to facilitate the shortest time to carry out bitstream filtering tasks.

Ex.1002
CISCO SYSTEMS, INC. / Page 205 of 256

Finally, it is another object of the present invention to be able to perform filtering rules out of order and without the current state-of-the-art convention of prioritizing the filtering rules serially.

Brief Description of the Drawings

The present invention may be more fully understood by a description of certain preferred embodiments in conjunction with the attached drawings in which:

FIGS. 1A and 1B are application level diagrams illustrating exemplary data protection systems in accordance with the present invention;

FIG. 2 is a flow diagram illustrating the components and operations of a preferred embodiment of the present invention;

FIG. 3 is a flow chart illustrating the basic functions of a repeater core and four filter levels in accordance with preferred embodiments of the present invention;

FIG. 4 is a diagram illustrating filtering functions of Level 2 filters in relation to the flow of packet data from internal and external networks in accordance with preferred embodiments of the present invention;

FIG. 5 is a flow chart illustrating packet filtering functions of Level 3 filters in accordance with preferred embodiments of the present invention;

FIG. 6 illustrates the rules by which TCP and UDP packets are evaluated in parallel in accordance with preferred embodiments of the present invention;

FIG. 7 is a diagram illustrating parallel rule evaluation for TCP and UDP packets in accordance with preferred embodiments of the present invention;

FIG. 8 is a flow chart illustrating packet filtering functions of Level 4 filters in accordance with preferred embodiments of the present invention;

FIG. 9 is a block diagram of the hardware components of a preferred embodiment of the present invention;

FIG. 10 is an illustration of an exemplary design of an external case in accordance with preferred embodiments of the present invention;

FIGS. 11 and 12 are flow diagrams illustrating SYN flood protection in accordance with preferred embodiments of the present invention; and

Ex.1002
CISCO SYSTEMS, INC. / Page 206 of 256

FIG. 13 is a flow chart illustrating the process of "garbage collection" in flood lists in accordance with preferred embodiments of the present invention.

Detailed Description of the Preferred Embodiments

The present invention will be described in greater detail with reference to certain preferred and alternative embodiments. As described below, refinements and substitutions of the various embodiments are possible based on the principles and teachings herein.

FIG. 1A and FIG. 1B illustrate the physical positioning of a stateful packet filtering hub in accordance with the present invention in two exemplary network configurations. The packet filtering hub of the illustrated embodiments preferably serves as an Internet firewall/data protection system (hereafter "data protection system").

With reference to FIG. 1A, in the illustrated embodiment data protection system 1 is coupled through a port to router 2 (or cable modem or other preferably broadband, persistent network connection access device), which is linked through a broadband connection to other computer systems and networks, exemplified by Internet 8 and Internet Service Provider (ISP) 10. Packets of data are transmitted from an ISP, such as ISP 10, via Internet 8 to router 2. The packets are transmitted to data protection system 1, which analyzes the packets in "real time" and without buffering of the packets, while at the same time beginning the process of transmitting the packet to the internal network(s) in compliance with the timing requirements imposed by the Ethernet or other network standards/protocols. If a packet of data satisfies the criteria of the rules-based filtering performed within data protection system 1, which is executed in a manner to be completed by the time the entire packet has been received by data protection system 1, then it is allowed to pass to hub 6 as a valid packet, which may then relay the cleared packet to computers 4a, 4b, 4c, etc. on the internal network. If a packet of data fails to meet the filtering criteria, then it is not allowed to pass as a valid packet and is "junked." Junking is defined as changing bits or truncating data, depending on the type of link, in a manner such that the packet is corrupted or otherwise will be detected by the receiving computers as invalid or unacceptable, etc. Without the intermediate positioning of data protection system 1, the packets would be transmitted directly to unprotected hub 6, thereby exposing computers 4a, 4b and 4c to security risks. It should also be noted that hub 6 is optional in accordance with the present invention; in other embodiments, data protection system 1 may be directly connected to a single computer or

Ex.1002
CISCO SYSTEMS, INC. / Page 207 of 256

may have multiple ports that connect to multiple computers. Similar filtering is performed on packets that are to be transmitted from computers 4a, 4b, and 4c to Internet 8.

With reference to FIG 1B, in this illustrated embodiment data protection system 1 is coupled via one port to DSL router 2 (again, the network access device is not limited to a DSL router, etc.), which provides the broadband connection to Internet 8. As with the embodiment of FIG. 1A, data protection system 1 also is coupled to a number of computers 4a, 4b, etc., on the internal network, and serves to provide filtering for packets between computers 4a and 4b and Internet 8 in the manner described in connection with FIG. 1A. In this embodiment, data protection system 1 is also connected via another port to hub 6, which serves as the main point of contact for incoming connections from the Internet for bastion hosts 5a and 5b, etc. In accordance with this embodiment, packets are transmitted to router 2 and then to data protection system 1. If the packets are approved by data protection system 1 (i.e., passing the filtering rules/checks performed with data protection system 1 while the packet is being received and transmitted), then the packets are allowed to pass as valid packets to computers 4a, 4b and hub 6. (The rules-based filtering process of preferred embodiments of the present invention will be described in more detail hereinafter.) Hub 6 may relay the packets to other internal host computers 5a, 5b, etc., on the local area network (LAN). These computers may include, for example, a Web and FTP server 5a, or a streaming audio server 5b, etc. Thus, in accordance with the illustrated embodiment, packets that passed the filtering rules/checks are passed as valid packets to computers, such as protected internal host computer 4a, which as illustrated may be connected to printer 7. In this particular embodiment, a bastion port is provided that may be used to service more than one bastion host. In other embodiments, different network configurations may be utilized in accordance with the present invention.

FIG. 2 illustrates the general components and operations of certain preferred embodiments of the present invention. Connection to external network 12 is made by physical interface 14. Physical interface (or PHY) 14 preferably is implemented with commercially available, physical layer interface circuits, as are known in the art (such physical layer interface circuits may be off-the-shelf components, as specified in the Ethernet IEEE standard 802.3u.). At a minimum, the data protection system must contain two PHY interfaces, one for the Internet or other external network connection, and one (or more) for the internal network. It should be noted that, in preferred embodiments, PHY controllers are utilized, which implicitly assumes Ethernet-

Ex.1002
CISCO SYSTEMS, INC. / Page 208 of 256

type connections. In other embodiments in accordance with the present invention, other types of PHY interfaces and controllers are utilized for different networking standards.

Repeater core 16 functions as an Ethernet repeater (as defined by the network protocols of the IEEE standard 802.3) and serves to receive packets from external PHY 14, reshape the electrical signals thereof, and transmit the packets to internal PHY 18, which is coupled to internal network 20. While the packet is being received, reshaped, and transmitted between PHYs 14 and 18, however, it is simultaneously being evaluated in parallel with filtering rules to determine if it should be allowed to pass as a valid packet (as will be described in greater detail elsewhere herein). As with the discussion regarding the PHY interfaces and controllers, changes in networking standards may alter the components functionality (such as the characteristics of repeater core 16), but not the basic parallel, real time packet filtering in accordance with the present invention. (In an alternate embodiment, for example, the data protection system may use switch logic or router logic; in full duplex, the same principles apply.)

The parallel filtering preferably consists of packet characteristics logic 22, packet type filters 26, and state rules filters 42. Packet characteristics logic 22 determines characteristics based on packet data (preferably in the form of 4-bit nibbles from PHY 14), whereas packet type filters 26 make filtering decisions generally based on packet type. State rules filters 42 perform rules- based filtering on several levels simultaneously. The results of filtering by packet type filters 26 and state rules filters 42 are combined by aggregator 24, which may be considered a type of logical operation of pass/fail signals (described in greater detail elsewhere herein). In preferred embodiments, if any one or more of the performed filtering rules indicates that the packet should be failed (or not allowed to pass as a valid packet), then the output of aggregator 24 is a fail; otherwise, the packet is allowed and the output of aggregator 24 is a pass. Thus, as packet data is being received and transmitted from PHY 14 to PHY 18 via repeater core 16, it is being evaluated in parallel via packet type filters 26 and state rules filters 42 (depending in part on packet characteristics determined by logic 22 from the data received from PHY 14). In accordance with the present invention, the results of filtering by packet type filters 26 and state rules filters 42 are provided to aggregator 24 by the time that the entire packet reaches repeater core 16, so that, based on the output of aggregator 24, the packet will either be allowed to pass as a valid packet or will be failed and junked as a suspect (or otherwise invalidated) packet.

Ex.1002
CISCO SYSTEMS, INC. / Page 209 of 256

Packet characteristics logic 22 receives packet data from PHY 14 and examines the packet data to determine characteristics, such as the packet type, datagram boundaries, packet start, packet end, data offset counts, protocols, flags, and receiving port. The packet type may include, for example, what are known in the art as IP, TCP, UDP, ARP, ICMP, or IPX/SPX. Such packet characteristics data is provided to packet type filters 26. Packet type filters 26 preferably make a decision about whether the packet should be passed or failed, with the result being transmitted to aggregator 24. In accordance with preferred embodiments, packet type filters 26 do not require the use of what may be considered an extensible rules system. The filters of packet type filters 26 preferably are expressed as fixed state machines or may be expressed using more flexible rules syntax. What is important is that packet type filtering is performed by filters 26 in the shortest time interval possible and in parallel with the packet data being received and transmitted to internal PHY 18, so that a pass/fail determination may be made prior to the time when the entire packet has been received by repeater core 16.

State rules filters 42 receive packet characteristics data from logic 22 and, based on this data as well as cached/stored connection and communication state information, executes a plurality of rules under the control of rules controller 28, preferably using a plurality of rules engines 36-1 to 36-N, so that a desired set of filtering decisions are promptly made and a pass/fail determination occurs before the entire packet has been received by repeater core 16. State rules filters 42 preserve a cache of information 30 about past network activity (such as IP addresses for established connections, port utilization, and the like), which is used to maintain network connection state information about which hosts have been exchanging packets and what types of packets they have exchanged, etc. Rules controller 28 preferably accesses rules map table 32 based on packet characteristics information, which returns rules dispatch information to rules controller 28. Thus, based on the connection state information stored in connection cache 30 and the characteristics of the packet being examined, rules controller 28 initiates filtering rules via a plurality of rules engines 36-1 to 36-N that simultaneously apply the desired set of filtering rules in parallel. (Preferably, N is determined by the number of rules that need to be performed in the available time and the speed of the particular logic that is used to implement state rules filters 42.)

As will be appreciated, while the packet pass/fail decision is being made in real time, and thus must be concluded by the time that the entire packet has been received, a large of number of

Ex.1002
CISCO SYSTEMS, INC. / Page 210 of 256

filtering rules must be performed quickly and in parallel. Preferably, rules controller 28 utilizes a plurality of rules engines 36-1 to 36-N, which logically apply specific rules retrieved from corresponding storage areas 40-1 to 40-N. Rules controller 28, based on the connection state and packet characteristics, determines which rules should be run based on which information. The rules to be run are then allocated by rules controller 28 to the available rules engines 36-1 to 36-N. As each rules engine 36-1 to 36-N may be required to execute multiple rules in order to complete the filtering decision process in the required time, corresponding queues 34-1 to 34-N are preferably provided. Thus, rules controller 28 determines the list of rules that should be performed (again, depending on the stored connection state and packet characteristics data) and provides the list of rules (and accompanying information to carry out those rules) to the plurality of rules engines 36-1 to 36-N via queues 34-1 to 34-N. Rules engines 36-1 to 36-N, based on the information from the queues 34-1 to 34-N, look up specific rule information from storage areas 40-1 to 40-N, carry out the rules, and preferably return the results to rules controller 28. As the rules are essentially conditional logic statements that notify the data protection system how to react to a particular set of logical inputs, it has been determined that providing a plurality of rules engines may enable the necessary decision making process to quickly provide the outcome of the rules-based filtering by the time the entire packet has been received.

Still referring to FIG. 2, rules controller 28 preferably uses rules map table 32 to dispatch the rules to rules engines 36-1 and 36-N, so that a filtering decision may be reached in the optimal amount of time. In a preferred operation, each rules engine extracts a rule ID from its queue, looks up the rules definition in its own rules table 40-1 to 40-N, evaluates the rule, returns the result to rules controller 28, and looks for another rule ID in its queue 34-1 to 34-N. The results from packet type filter 26 and rules controller 28 are combined into one result via aggregator 24: pass or fail. If a decision is not reached before the end of the packet is transmitted, then in preferred embodiments the packet will be processed as an invalid packet and junked.

It should be appreciated that the data protection system must make a filtering determination before the current packet is completely transmitted. Since the networking standards impose strict timing thresholds on the transit delay of packets, filtering is performed in real time, in parallel and without buffering the packet. (The transit delay threshold is the time it takes to get from the transmitting station to the receiving station.) Given that a filtering decision must be made in real time (before the last bit is received and forwarded to the applicable

Ex.1002
CISCO SYSTEMS, INC. / Page 211 of 256

interfaces), the filter rules are evaluated in parallel by rules engines that possess independent, direct access to the rules set collected in storage areas 40-1 and 40-N, which are preferably implemented as RAM tables. (In a preferred embodiment of the data protection system, the tables are implemented using on-chip, dual port RAM up to 4K in size. A programmable logic device, such as Xilinx Spartan II XC2S100, has 40K dual port synchronous block RAM. For example, an initial 110-bit segment of the rules controller RAM block may be a range table that delineates where each look up code begins and what the number of entries are.) Rules controller 28 dispatches the rules to each rules engine by placing a rules ID entry in a queue. Because each rules engine is assigned its own queue, a pipeline is created allowing the rules engine to continuously run and operate at maximum efficiency.

To operate efficiently the rules engines must also be capable of evaluating rules in any order. In accordance with the preferred embodiments, each rule has a priority and the highest priority result is accepted. Therefore, the rules must be evaluated in any order yet still obtain the same result, as if the rules were being evaluated serially from highest to lowest priority. This operation is accomplished in preferred embodiments by rules map table 32, which notifies rules controller 28 which rule is assigned to which rules engine. Thus, this decision is statically determined by the rules set and the number of rules engines. It should be noted that the rule set in general is greater than the number of rules engines.

FIG. 3 is a flow chart illustrating further aspects of preferred embodiments of the present invention. As previously described, preferred embodiments of the data protection system utilize programmable logic, or other suitable preferably hardware-based logic, to perform a large number of filter rules in parallel and at high speed. Such embodiments may be considered to provide an external interface, for instance, to the Internet, to external network 12, and one or more internal network interfaces, such as to internal network 20 and/or to bastion network 15 (see, for example, FIGS. 1A and 1B). As repeater core 16 (or the PHYs in FIG. 2) receives and transmits packet data, the packet is simultaneously subjected to a plurality of filtering rules. At step 44, the packet characteristics are determined (which, as previously described, may include protocol, addresses, ports, flags, etc.). The filtering rules are based on the packet characteristics, connection state information (depending upon the particular rules), and/or toggle or other physical switch state information. This filtering process may be represented by filtering steps 46,

Ex.1002
CISCO SYSTEMS, INC. / Page 212 of 256

48, 50 and 52, which, as depicted in FIG. 3, are performed at least in substantial part in parallel, and thus can make filtering decisions by the time the packet has been completely received.

As illustrated, after the packets are transmitted to repeater core 16, their characteristics are analyzed at step 44. Data packets generally consist of several layers of protocols that combine to make a protocol stack. Preferably, each layer of the stack is decoded and the information is passed to various filter blocks, as exemplified in steps 46, 48, 50 and 52. In accordance with the present invention, this filtering process is executed in parallel and in real time. In other embodiments, a variety of filter blocks or rules-based filters may be employed, incorporating parallel execution, real time filtering, etc., as may be necessary to complete the filtering decision in the required time.

Referring again to preferred embodiments illustrated in FIG. 3, Level 2 filters at step 46 may examine information in the link layer header for all incoming packets and decide whether a packet should be junked based on the packet protocol. Level 3 filters at step 48 may examine information in the networking layer headers. (For the IP protocol, these headers would equate to the ARP, RARP, IP, ICMP, and IGMP protocol headers.) While Level 2 filters preferably distinguish the packet type, Level 3 filters at step 48 and Level 4 filters at step 50 preferably distinguish IP datagram characteristics. Level 4 filters at step 50 preferably operate by examining IP, TCP and UDP headers along with data transmitted between the client and server processes, utilizing two techniques: stateful and non-stateful packet filtering. (Level 2, 3 and 4 filters are described in greater detail elsewhere herein.) Preferably a spoof check filter at step 52 detects whether the packet originated from an authorized IP address or not. To determine whether the packet should be allowed to pass as a valid packet, the filters must implement rules in parallel preferably based on programmable logic and register one of two values: pass or fail. After the values are registered, the outcome is collected in result aggregator 24, which logically combines the results to determine if the packet should be allowed to pass as a valid packet or should be denied as an invalid one. If the packet is passed, then repeater core 16 continues to send correct bits. If the packet is failed, then it is junked.

In accordance with preferred embodiments of the present invention as illustrated in FIG. 3, a spoof check is performed at step 52 on all packets entering a port. To prevent IP spoofing, the spoof check filtering of step 52 monitors IP addresses from the internal network and discards any incoming packets with IP source addresses that match internal IP addresses. A spoof check

Ex.1002
CISCO SYSTEMS, INC. / Page 213 of 256

ensures that a host on one network is not trying to impersonate a computer on another network, such as a computer on the Internet assuming the IP address of a computer connected to an internal port. In accordance with preferred embodiments, spoofed packets are always junked by the data protection system. In such embodiments, the data protection system performs this check by keeping track of the IP addresses of packets arriving on the internal and bastion ports. The source and destination addresses of each packet are checked against the known port addresses to ensure they are valid for the appropriate port.

FIG. 3 also illustrates alarm controller 53, which preferably is coupled to result aggregator 24. Alarm controller 53, which could be a separate logic block or within the result aggregator, receives signals indicating when packets are being rejected, either directly from the logic performing the filtering or from result aggregator 24. As described in greater detail elsewhere herein, alarm controller 53 desirably is utilized to provide visual feedback of the system status or operation (such as whether the data protection system is under attack) via LED(s) 54 (or other light source, LCD or other type of alphanumeric or graphic display, etc.). For instance, a LCD may provide an additional mechanism for entering security configurations, such as specific protocols to allow a reference clock. Alarm controller 53 also may be coupled to an audio feedback device, such as speaker 55, which similarly may be used to provide audio feedback of the system status or operation. For example, if a packet is rejected, a first visual indication may be provided via LED(s) 54 (e.g., yellow light); if packets are being rejected in a manner or at a rate that suggests an internal computer is under attack, then a second visual indication may be provided via LED(s) 54 (e.g., a red light). Similarly, first and second tones or other audible indicators (different tones, volumes, sequences, etc.) may be provided via speaker 55 to indicate the detected condition). In preferred embodiments, such feedback, audio and/or visual, may maintain the alert state until reset by the user, such as by depressing a toggle. Thus, if the internal system has been determined to be under attack while the user is away, this fact will be made known to the user when the user returns and sees and/or hears the visual and/or audio feedback. It also should be noted that alarm controller 53 also may generate a UDP packet (indicated by the dashed line that is coupled to internal network 20) that informs the internal client computer of the attack or suspected attack, thereby providing an additional optional mechanism to inform the user of suspect activity.

Ex.1002
CISCO SYSTEMS, INC. / Page 214 of 256

FIG. 4 illustrates exemplary packet filtering functions of Level 2-type filtering in relation to the flow of packet data from internal and external networks. External PHY 12 receives packet electrical signals off the physical wire or other medium. Similarly, internal PHYs 18 and 58 receive packet electrical signals from internal network 20 or bastion network 15, respectively. Packet data comes in from one of PHYs 12, 18 or 58 to PHY controller 56. PHY controller 56 in general receives incoming data from network PHYs 12, 18 or 58, detects collisions, indicates the start and end of packet data, and forwards the packet data to other appropriate components of the data protection system (such as described herein). From PHY controller 56, data from the packet being received, along with information indicating which PHYs are active (i.e., on which PHY a packet is being received and to which PHYs the packet is being transmitted, etc.), and the packet is reshaped and transmitted in real-time via block 60 (i.e., the packet is not received into a buffer, after which it is sequentially processed to determine if the packet should be allowed to pass, etc., as in conventional firewalls). In the case of a packet received from Internet 8, the packet is received by PHY controller 56 from external PHY 12, and reshaped and transmitted in real-time to the internal PHY 18 and/or bastion PHY 58.

As will be appreciated, block 60 in essence performs the repeater functionality of passing the incoming data to the non-active PHYs after reformatting the preamble. Block 60 also preferably receives "junk" or "pass" signals from the filtering components and a collision detection signal from PHY controller 56. In preferred embodiments, a "jam" signal is propagated to each PHY upon detection of a collision. A packet is invalidated for all PHYs that belong to a network category that receives a "junk" signal. (For example, if the packet is invalidated for internal networks, then the packet is invalidated for all internal network ports.) Preferably, block 60 also receives a single output signal from result aggregator 24 for each PHY category (i.e., internal or external). As will be explained in greater detail hereinafter, result aggregator 24 generates the signals provided to block 60 depending on "junk" or "pass" signals from each filter component.

In accordance with the present invention, the packet is also simultaneously routed through a plurality of filtering steps. In the exemplary illustration of Level 2 filters in FIG. 4, the packet type is determined at step 64. At step 64, the network packet is examined to determine the enclosed Level 3 datagram type, such as ARP, RARP, IP, or IPX. This information is used to perform Level 2 filtering and to decide how to deconstruct the enclosed datagram to perform

Ex.1002
CISCO SYSTEMS, INC. / Page 215 of 256

Level 3 filtering. If an unknown packet type is received from the external network, then the packet preferably is junked if filtering is enabled. Unknown packet types received from the internal network preferably are forwarded to other hosts on the internal network and may be forwarded to the bastion port but are not forwarded to the external network.

If it is a known packet type, then it is routed through additional filtering steps based on particular packet protocols. In the illustrated embodiment, at step 66, if the packet is an Address Resolution Protocol (ARP) type packet, then it is passed. At step 68, if the packet is a Reverse Address Resolution Protocol (RARP) type packet and is from external PHY 12 and the op code is 3, then it is junked; otherwise, it is passed as indicated at step 70. As is known in the art, RARP generally is a protocol used by diskless workstations to determine their address; in accordance with preferred embodiments, RARP responses are the only RARP packets allowed to enter internal networks from external hosts. At step 72, if the packet is an Internet Protocol (IP) type packet, is from the external PHY and has been broadcast, then it is junked. (For example, broadcast packets from the external network preferably are not allowed; a broadcast packet is determined by examining the IP address or the physical layer address). Otherwise, the process proceeds to step 74. Step 74 preferably examines the IP header, which contains a protocol fragment where an application can place handling options. Certain options (such as the illustrated list) may be considered to provide internal, potentially sensitive network information, and thus packets that contain these options preferably are not allowed into the internal network. At step 74, if a handling option of 7, 68, 131, or 137 is present, then the packet is junked; if these options are not present, then the process proceeds to filter IP packet step 76 (exemplary details of step 76 are explained in greater detail hereinafter). If the packet passes the filtering rules applied in filter IP packet step 76, then the packet is passed, as indicated by step 78. If the packet does not pass the filtering rules applied in filter IP packet step 76, then the packet is junked.

As illustrated in FIG. 4, any signals indicating that the packet should be junked are provided to result aggregator 24, as indicated by line 73. The filtering results are thus routed to result aggregator 24, which records whether any of the packets were junked and thus invalidated. Result aggregator 24 provides one or more signals to the logic of block 60 at a time early enough so that a Frame Check Sequence (FCS) character may be altered to effectively invalidate the packet. Therefore, prior to complete forwarding of the packet, the filtering decision is made and the FCS character is either altered in order to ensure that it is corrupted, if the packet is to be

Ex.1002
CISCO SYSTEMS, INC. / Page 216 of 256

junked, or forwarded unchanged, if the packet is to be passed. In effect, a system in accordance with the present invention acts like a hub or repeater by receiving packet nibbles (2 or 4 bits at a time) on one interface wire and by broadcasting those nibbles on other interfaces. Thus, the data protection system cannot make a decision about a packet before forwarding the nibbles on the non-receiving interfaces since this may result in an inoperable Ethernet network. If the system is enabled to filter a packet, it must still transmit data while receiving data to ensure the Ethernet network functions correctly and efficiently. The data protection system filters packets by transmitting a nibble on the non-receiving interfaces for each collected nibble on the receiving interface, but ensures that the Ethernet packet FCS character is not correct if the packet is suspect. Thus, the sending station may perceive that it successfully transmitted the packet without collision, but in fact all receiving stations will discard the corrupted packet. It should be noted that, in alternative embodiments, in lieu of or in addition to the selective alteration of a FCS or checksum-type value, the data contents of the packet also may be selectively corrupted in order to invalidate packets. In such embodiments, the packet contents are selectively altered to corrupt the packet (e.g., ensure that the checksum is not correct for the forwarded packet data or that the data is otherwise corrupted) if the packet did not pass the filtering rules.

FIG. 4 also illustrates physical switch or toggle 62, the state of which can be used to enable or control packet filtering in accordance with the present invention. The state of switch/toggle 62 is coupled to the data protection system in a manner to enable or disable packet filtering. In the illustrated example, the state of switch/toggle 62 is coupled to the logic of block 60; if, for example, packet filtering is disabled, then block 60 can receive and forward packets while disregarding the output of result aggregator 24 (alternatively, result aggregator 24 can be controlled to always indicate that the packet should not be invalidated, etc.). In other embodiments, the state of such a switch/toggle can control result aggregator 24 or all or part of the particular filtering steps. As will be appreciated in accordance with the present invention, the data protection system may be controlled and configured without requiring the implementation of complex software. The data protection system preferably utilizes toggle buttons or other physical switches to selectively enable various functions, such as Internet client applications, Internet server applications, and filtering features. The system, for example, also may contain a button for retrieving updated core logic or filtering rules from a data source. The data source for such updating of the core logic may include a wide range of forms of digital media, including but not

Ex.1002
CISCO SYSTEMS, INC. / Page 217 of 256

limited to a network server, a floppy disk, hard drive, CD, ZIP disk, and DVD.Configuration, therefore, may be determined by physical interface components attached or linked to the system .

Referring to FIG. 5, additional details of preferred filter IP packet step 76 will now be described. FIG. 5 is a flow chart illustrating the packet filtering functions of the Level 3 filters first illustrated in FIG. 3. At step 81, the Level 3 filtering processes determine the IP datagram characteristics, which preferably include: datagram type (ICMP, IGMP, TCP, UDP, unknown); source and destination IP addresses; fragment offset; and fragment size. Based on the IP datagram characteristics, further filtering operations are performed. Preferred functions for Level 3 filtering will now be described in greater detail.

At step 80, if the IP datagram type is unknown, then the fail signal is set, sending a signal to the result aggregator that the packet should be invalidated. At step 82, if the IP datagram type is Internet Group Management Protocol (IGMP), then the fail signal is set, preventing IGMP packets from passing. At step 84, if the type is Internet Control Message Protocol (ICMP) and the packet is from the external PHY, then the filtering proceeds to step 88. At step 84, if the type is ICMP and the packet is not from the external PHY, then the packet is passed as indicated by step 86. At step 88, if the type is ICMP, and the packet is from the external PHY and does not contain a fragment offset of 0, then the fail signal is set, preventing fragmented ICMP packets from passing, as indicated by step 90; otherwise, the filtering proceeds to step 92. At step 92, if the type is ICMP, the packet is from the external PHY and contains a fragment offset of 0, then the packet type is further evaluated for request and exchange data. This data preferably includes one of the following ICMP message types: 5 for redirect; 8 for echo request; 10 for router solicitation; 13 for timestamp request; 15 for information request; or 17 for address mask request. Accordingly, if the packet type satisfies the criteria for step 92, then the fail signal is set as indicated by step 96. Otherwise, the packet is allowed to pass, as indicated by step 94. As will be appreciated, the ICMP filtering branch serves to keep potentially harmful ICMP packets from entering from the external network. (The listed message types represent an exemplary set of ICMP packets that may expose the internal network topology to threats or cause routing table changes.)

If IP datagram characteristics indicate that the packet is a Transmission Control Protocol (TCP) or User Datagram Protocol (UDP) packet, then the filtering proceeds to step 98. At step 98, it is determined whether the packet is a fragment 0 packet. If it is not, then the packet is

Ex.1002
CISCO SYSTEMS, INC. / Page 218 of 256

allowed to pass, as indicated by step 100. This filtering process follows the convention of filtering only the first fragments, as subsequent fragments will be discarded if the first one is not allowed to pass; in other words, the data protection system ignores all but the first packet of a TCP or UDP datagram. At step 104, if the packet is TCP or UDP and is a first fragment packet, then it is determined whether a proper protocol header is included in the fragment; if it is not, then the fail signal is set as indicated by step 102 (in the illustrated embodiment all TCP and UDP packets that have improper headers are junked). If the packet is TCP or UDP, is a first fragment, and a proper protocol header is included in the packet, then the filtering proceeds to step 106 (further exemplary details of which will be described in connection with FIG. 6).

FIG. 6 is a flow chart that illustrates a preferred example of how TCP and UDP packets are evaluated in parallel in accordance with the present invention (see, e.g., the multiple rules engines and related discussion in connection with FIG. 2 and the Level 4 filters of FIG. 3). As is known, TCP and UDP are host-to-host protocols located in the Transport Layer of the protocol stack. FIG. 6 illustrates how packet data 108 is unbundled and decoded for packet characteristics at step 110 (e.g., IP addresses, ports, flags, etc.) as well as for packet type and PHY activity at 112 (i.e., whether it is an internally generated packet or an externally generated one). In the preferred embodiments, the packets are evaluated in parallel according to the following rules.

As indicated at step 114, if the internal port number is 68 and the external port number is 67, then the packet is passed, regardless of whether it originated on the internal network or the external network. As indicated at step 116, if the packet type is TCP, the server-mode is enabled (such as may be controlled by a toggle or other physical switch), the external PHY is active, and the internal port number is 80, then the packet is passed to the internal network(s). (The server mode is explained in greater detail in connection with FIG. 7 below). As indicated at step 118, if the packet type is TCP and either the Acknowledge ("ACK") bit or Final ("FIN") bit is set, then the packet is passed, regardless of whether it originated on the internal network or the external network. As indicated at step 120, if the packet type is TCP and an internal PHY is active, then the packet is passed to the external network. As indicated at step 122, if the packet type is UDP, an internal PHY is active, and the external port number is 53, then the packet is passed to the external network and the communication state (e.g., source and destination port numbers) is stored as indicated by comm or communication state store 124. As indicated at step 126, if the packet type is UDP, the external PHY is active and the external port number is 53, then the

Ex.1002
CISCO SYSTEMS, INC. / Page 219 of 256

packet is passed to the internal network(s) if there is a match in the communication state. As indicated at step 128, if the packet type is TCP, an internal PHY is active, the external port number is 21, the Synchronize Sequence Numbers ("SYN") bit is not set but the ACK bit is set, and the packet is a PORT command, then the packet is passed to the external network and the client (internal network) active port is determined and the communication state is stored. As indicated at step 130, if the packet type is TCP, the external PHY is active, the external port number is 20, and the SYN bit is set but the ACK bit is not set, then the packet is passed to the internal network(s) if there is a communication state match. As indicated at step 132, if all checks have been completed, then a complete signal is set, and signals indicative of whether the packet passes to internal or external network(s) as previously described are bitwise logically ORed to generate pass internal and pass external signals, as illustrated.

In preferred embodiments, if the completion signal is not generated by the time that the packet has been completely received, then the packet is junked. It should be noted that the use of such a completion signal and packet junking can be extended to the diagrams and description, etc. of other figures, such as FIGS. 2, 3, 4, 5, 7 and 8. If the filtering process has not been completed by the time that the packet has been completely received, then the packet is preferably junked.

Referring now to FIG. 7, Level 4 filtering in accordance with the present invention will be further described. The embodiment of FIG. 7 is a table-based filter, which uses an approach similar to that described in connection with FIG. 2. This approach preferably utilizes a programmable logic device (PLD) that includes low latency, high-speed ROM and RAM blocks.

As previously described, Level 4 filtering is based on TCP and UDP packet characteristics, the determination of which is illustrated in FIG. 7 by block 133. TCP and UDP characteristics, as noted elsewhere herein, may include not only source and destination port numbers, but also the state of the SYN, ACK, FIN and/or RESET flags in the case of TCP packets. The TCP/UDP characteristics are determined by the TCP/UDP header information. The TCP/UDP characteristics and active PHY information are used in the generation of a lookup code, which in the embodiment of FIG. 7 is coupled to rules dispatcher 134. Rules dispatcher 134 uses a lookup code to determine the filtering rules to be applied to a packet and then places the identifiers of the rules to be run in queues 138-1 to 138-N for each of the rules engines 140-1 to 140-N. Mapping table 136 is coupled to and receives address data from rules dispatcher 134.

Ex.1002
CISCO SYSTEMS, INC. / Page 220 of 256

Mapping table 136 preferably is a ROM block that identifies the rules associated with each lookup code and the rules engine for which each rule is to be dispatched. The mapping data for the rules and rules engines are returned to rules dispatcher 134.

The identifiers of the rules to be run are dispatched by rules dispatcher 134 to the appropriate queues 138-1 to 138-N, which are preferably FIFO-type structures that hold the rule identifiers for corresponding rules engines 140-1 to 140-N. Queues 138-1 to 138-N not only enable rules dispatcher 134 to assign rules at maximum speed, but also allow each rules engine to retrieve rules as each one is evaluated. The rules engines 140-1 to 140-N are a plurality of filtering engines/logic that use a rule table to read a definition specifying whether a rule applies to a packet and whether the packet passes or fails the rule test. Rules tables 142-1 to 142-N preferably are ROM blocks that contain a definition of a set of filtering rules that are controllably run by the rules engines 140-1 to 140-N. Rules tables 142-1 to 142-N may contain different rules as may be appropriate to provide all of the rules necessary to adequately filter packets within the timing constraints imposed by the real time filtering of the present invention, and the speed of the hardware used to implement the data protection system.

In addition, as illustrated in FIG. 7, rules engines 140-1 to 140-N may receive as inputs signals indicative of a stored communication state, IP datagram characteristics, or physical switch/toggle states. As indicated by block 148, toggles may be utilized for a variety of features, such as enabling web client, web servers or other user-defined features. With at least some of the executed rules based on the stored communication state, stateful rules are implemented with the illustrated embodiment. A communication state table or cache is provided. A cache of communication state information between different hosts provides a set of bits that represent rule defined state information. For example, source and destination port information may be stored in the cache and used for state-dependent filtering.

In the illustrated embodiment, communication state information from rules engines 140-1 to 140-N may be provided to result aggregator 144, which in turn may store the communication state information to the communication state cache or storage area. Result signals, representing pass or fail of the packet based on the applied rules, also are provided to result aggregator 144. Result aggregator 144 combines the pass/fail results signals and provides a pass or junk signal or signals, which may be provided to the repeater core or to another result aggregator.

Ex.1002
CISCO SYSTEMS, INC. / Page 221 of 256

FIG. 8 illustrates an alternative preferred embodiment, in which the Level 4 filtering is implemented with a register-based filtering methodology. As with the Level 4 filtering of FIG. 7, both stateful filters 154 and non-stateful filters 153 may be implemented. As with the embodiment of FIG. 7, Level 4 filtering requires that TCP and UDP packet characteristics be determined, as illustrated by box 150. In addition to the Level 3 packet characteristics, Level 4 filters in accordance with this embodiment also require the source and destination port numbers and the TCP header values for the SYN, RST, FIN flags and the ACK value. This information preferably is used by both non-stateful and stateful filters 153 and 154. The implementation of the non-stateful filters is executed with a state machine or other logic preferably in the PLD that compares characteristics to the allowed non-stateful rules and makes a judgement as to whether the packet should be passed or failed. The non-stateful rules engine/logic uses a set of static rules to decide if a packet is allowed to pass through the firewall. These rules preferably are specified using a combination of control inputs, active PHY, and network packet characteristics.

Stateful filters are implemented to handle communication channel interactions that span multiple transmissions between hosts. The interactions typically occur at the Application Layer of the protocol stack, where examples may include FTP, RealAudio, and DHCP. These interactions may also take place at lower levels in the protocol stack, such as ARP and ICMP request/response.

In this embodiment, stateful filters 154 use protocol front-end and protocol back-end logic, along with a plurality of state registers to implement state-dependent filters. Each protocol that requires stateful packet filtering preferably has protocol handlers in the form of front-end and back-end logic, which decide when to issue a pass signal for a packet or store the identifying characteristics of a bitstream for later reference. Front-end logic 160-1 to 160-N monitors the network traffic to identify when the current communication state needs to be stored, deleted or updated. Front-end logic 160-1 to 160-N informs a corresponding back-end logic 158-1 to 158-N that a register will be allocated for storage for a bitstream. All store and delete state register requests are sent to back-end logic 158-1 to 158-N so it may update its internal information. Register controller 155 controls the actual selection of registers in state registers 156 and informs the corresponding back-end logic 158-1 to 158-N. Back-end logic 158-1 to 158-N monitors which state registers are dedicated to its protocol and issues a pass signal for packets that match an existing bitstream, as indicated by the appropriate packet characteristics and a matching state

Ex.1002
CISCO SYSTEMS, INC. / Page 222 of 256

register. It should be noted that in alternate embodiments, different organizations of the functions of the programmable logic may be implemented in accordance with the present invention, incorporating various types of protocol handlers and state registers, as may be necessary.

Register controller 155 consolidates multiple store and clear signals from the various front-end logic 160-1 to 160-N and directs them to the appropriate registers in state registers 156. Register controller 155 also informs the various back-end logic 158-1 to 158-N which registers of state registers 156 are to be used for storage. The registers of state registers 156, under control of register controller 155, store the communication state of a bitstream; for example, a particular register records information about the two communication ends of the bitstream and also monitors each network packet to see if it matches the stored end-point characteristics. State registers 156 then sets a signal when its state matches the current packet characteristics. A "garbage collection" function also is implemented (as further illustrated in FIG. 13 below) to help free up state registers when the protocol information during the three-way handshake is not accessed within specific time frames.

As is known in the art, many protocols provide a way of identifying the end of a communication session. Accordingly, in preferred embodiments the data protection system detects when a stateful stream ends and frees up the associated state registers. Since clients and servers do not always cleanly terminate a communication session, the system preferably implements session time-outs to free state registers after a period of bitstream activity and to prevent indefinite state register exhaustion. If the network experiences a high rate of bitstreams requiring stateful inspections, the system's resources, which are allocated to tracking application data, can become exhausted. In this case, the system preferably resorts to allowing network traffic based on a set of static rules to pass through the non-stateful rules designed specifically for each protocol. This stateful to non-stateful transition is called "stateful relaxation." To maintain maximum security, a protocol handler that cannot gain access to an open state register will free up all of its state registers to help prevent other protocol handlers from entering into a relaxation state. The system will then wait for a state register to open, start a timer, and record protocol communication data in the state registers, while relying on the static rules. When the timer expires, the state filter will cease relying upon the static rules and approve packets solely on state register information.

Ex.1002
CISCO SYSTEMS, INC. / Page 223 of 256

FIG. 8 also illustrates toggle 152, which, in the additional illustrated example, selectively enables FTP (File Transfer Protocol) communications based on the switch state. Protocol back-end logic 158-1 to 158-N, as appropriate, utilize such toggle state information to selectively generate the pass/fail signals for the applicable protocols. For example, when the toggle switch is enabled, which is the default mode in most FTP client applications, it may send a signal to the internal FTP server to open a TCP connection to the client. Front-end logic 160-1 monitors the network traffic for data from the internal network, PORT command, source port number (greater than 1024) and destination port number (equal to 21). When this information is matched, front-end logic 160-1 requests state register controller 155 to store both the PORT command IP address and the port number as the destination end and the destination IP address, as well as store port 20 as the source end of a future communication packet. (In other embodiments, additional checks may be conducted to ensure the active connection IP address is the same as the current source IP address.) When back-end logic 158-1 recognizes the storage request, it waits for the allocated state register in state registers 156 to be sent by register controller 155. For example, when the state register number is set as register #1, then it records that register #1 is dedicated to allowing active FTP connections through the data protection system. Back-end logic 158-1 then waits for register #1 to signify that the current packet matches its stored state. When back-end logic 158-1 recognizes that the three-way TCP handshake has been completed for the new connection, it will notify front-end logic 160-1 to delete the state register. If the state register is junked, then back-end logic 158-1 records that register #1 is no longer dedicated to active FTP connections, allowing register controller 155 to allocate that register to a different protocol or network connection in the future.

FIG. 9 illustrates a preferred physical implementation of one embodiment of the present invention. In this embodiment, one external network connection and one internal network connection are provided. It will be appreciated that the components of FIG. 9 can be altered to implement, for example, bastion network connections and multiple internal network connections, etc.

The Internet connection, for example, via a cable modem, DSL router or other network interface, preferably is coupled with a physical cable to connector 168, which may be an RJ-45 connector. The signals received via connector 168 are coupled to and from PHY 170, which provides the physical interface for the data signals received from, or coupled to, the external

Ex.1002
CISCO SYSTEMS, INC. / Page 224 of 256

network. Signals are coupled between PHY 170 and PLD 162, and signals are coupled between PLD 162 and PHY 172, which couples signals between connector 174 (which again may be an RJ-45 connector). The connection to the internal network may be made through connector 174.

In the preferred embodiment, PLD 162 implements the various levels of filtering as previously described. PLD 162 provides logic/hardware based, parallel filtering rules logic/engines, which make a decision about whether the packet should be allowed to pass or fail prior to the time that the packet is passed on by the repeater core portion of PLD 162 (as described elsewhere herein). The logic of PLD 162 to implement the filtering rules is programmed/loaded by controller 164, which may be a RISC CPU such as a MIPS, ARM, SuperH-type RISC microprocessor or the like. The PLD code preferably is stored in memory 166, which preferably is a re-programmable, non-volatile memory, such as FLASH or EEPROM. In this manner, the PLD code may be updated by reprogramming memory 166, and the updated PLD code may then be programmed/loaded in to PLD 162 under control of processor 164.

FIG. 9 also illustrates the use of LEDs 177, 178 and 179 to provide visual feedback of the data protection system status. In accordance with the present invention, the use of such displays or light sources may be used to convey various types of information to the user. For example, LEDs 177 and 179 may be provided to indicate that PHYs 170 and 172 are detecting an active network connection (and thus provide an indication that the network connections are present and functioning properly). LED 178 preferably provides alarm type information. For example, LED 178 may be provided in the form of a multi-color LED, which may provide a first colored light (e.g., yellow) if the data protection system has rejected one or more packets (thereby indicating that the system may be detecting an attack), and which may provide a second colored light (e.g., red) if the data protection system is continually rejecting packets or rejecting packets at a high rate (thereby indicating that the system is likely under attack). Such visual indicators, which may be coupled with audio feedback as described elsewhere herein, serve to inform the user that the user's computer or network may be under attack, thereby enabling the user to take further action, such as disconnecting from the network.

It should be noted that such visual feedback may be implemented in a variety of forms. In addition to multi-color or multiple LEDs or other lights sources or displays, a single LED could be provided, with the LED blinking at a rate that indicates the level of severity as predicted by the data protection system. For example, if no packets have been rejected, then the LED may be

Ex.1002
CISCO SYSTEMS, INC. / Page 225 of 256

in an off or safe (e.g., green) state. If packets have been rejected but not on a continual or high rate basis, then the LED (e.g., red) may be controlled to blink on and off at a first, preferably lower speed rate. If packets are being rejected on a continual or high rate basis (or otherwise in a manner that that system believes is suspect), then the LED may be controlled to blink on and off at a second, preferably higher speed rate. Thus, the LED blink rate desirably may be controlled to blink at a rate that corresponds to the level of severity of the security threat that is determined by the data protection system. Optionally coupled with audio feedback, such visual indicators may provide the user with alarm and status information in a simple and intuitive manner.

As further illustrated in the preferred embodiments of FIG. 9, a variety of physical switches or toggles 176, 180, 181 and 182 may be coupled to PLD 162 or controller 164. As illustrated by update button 176, toggles may be used to control the updating of the PLD code (for instance, to reconfigure or update the system, providing updated filtering algorithms). As illustrated by buttons 180 and 181, toggles may be used to selectively activate/deactivate filtering steps depending on whether a protected computer is enabled to operate in either a server mode or client mode (the state of such toggles preferably being used to control filtering decisions made within the filtering logic). As illustrated by reset button 182, toggles may also be used to control the reset of the data protection system (for example, to cause the PLD code to be re-loaded, as when the system enters an inoperable state caused by power supply irregularities or other unusual circumstances). The use of such physical switches/toggles allows the data protection system to be controlled in a straightforward manner, simplifying the user operability of embodiments of the present invention.

With reference to FIG. 9, additional details of preferred update program and protocols will now be described. The data protection system may be controlled to operate in an update mode by pressing update button or toggle 176, which preferably is provided on an external case (further described in FIG. 10 below). In accordance with preferred embodiments, during the interval when the update button is pressed by the user and the update either completes or is canceled by the user, the data protection system will not forward any packets (i.e., filtering is not active, so packet transmission is blocked). The user may then run an update program (which may be a browser-based or stand-alone application) from an internal host computer.

In the illustrated embodiment, it is assumed that the user previously downloaded a system update or is downloading an update through a browser. The update program preferably breaks the

Ex.1002
CISCO SYSTEMS, INC. / Page 226 of 256

update into 1K size packets and forwards them, using a limited broadcast destination address (for example, 255.255.255.255). The source and destination ports are set to a predetermined value, such as 1 (1-4 are currently unassigned according to RFC 1010), and an IP option is set in the IP header. The program data preferably is preceded by the system update header that has the following structure in the illustrated embodiment: ID (1)/count (1)/bit length (2). The numbers in parentheses represent the field size in bytes. The ID for the entire transaction remains unchanged, except for the count field increments for each packet. In a preferred embodiment, the data protection system may receive the packets in order and perform several checks, such as ensuring the ID and count fields are correct, verifying the UDP checksum, and storing the configuration data in non-volatile memory. Preferably, these checks may be controlled by controller 164. Thereafter, the updated PLD code may be loaded into the PLD, with the filtering operations being based on this updated code.

As a result of the parallel filter rules evaluation as previously described, packets do not need to be buffered, except, for example, to create octets that facilitate determining protocol elements. (As is known, data needs to be combined into 8-bit, 16-bit, or 32-bit words because header and packet data often exist in these sizes or straddle a 4-bit nibble boundary.) Instead of buffering each packet, the data protection system generates another distinct data packet or chunk. This process of packet generation occurs while a plurality of filtering rules are applied in real time and in parallel, producing improved data protection systems and methods.

FIG. 10 illustrates a preferred embodiment of an exemplary design of an external case of a data protection system in accordance with the present invention (it being noted that the particular switches, lights, etc., and their physical arrangements being exemplary). For example, external case 184 may be a molded plastic box in the shape of a "U" or folded tube as illustrated. The exemplary features of this external case may include ports, buttons (or toggle switches), LEDs, a clock, a removable logo disk, and a power supply connector. Home (internal) port 186, Internet (external) port 188, and power supply connector 190 are preferably located on the same side of external case 184 with power supply connector 190 set between the two ports. Home port 186 connects to the internal network via cable 192; Internet port 188 connects to the external network via cable 194. Power supply connector 190 is coupled to an external DC power supply via cable 193. The PHY of each port preferably is coupled to a link LED, such as previously described: home port 186 is coupled to internal link LED 196; and Internet port 188 is coupled to

Ex.1002
CISCO SYSTEMS, INC. / Page 227 of 256

external link LED 198. The link LEDs are thus coupled to the internal and external PHYs, respectively, and serve to indicate whether the PHYs have detected a network connection.

In the preferred embodiment, on the internal network side of the U-shaped case, server mode button 200 is provided to allow the user to selectively enable filtering depending on whether the internal computer is allowed to operate in a server mode (thus, the state of server mode button 200 may be used to selectively control filtering decisions based on whether internal computers will be operating in a server mode, etc.). Server mode button 200 preferably includes server mode LED 202. When illuminated (e.g., green), server mode LED 202 indicates that the internal computers are enabled to operate in a server mode and the filtering decisions will be controlled accordingly. Server mode button 200 and server mode LED 202 are coupled to PLD 162, as described in FIG. 9. In the illustrated embodiment, parallel to server mode button 200 on the external side of the case is alert button 204, which contains alert LED 206. Alert LED 206 is coupled to alarm controller 53, which preferably is implemented as a part of PLD 162 (as illustrated in FIGS. 3 and 9, respectively). Alert LED 206 may contain a single or multi-colored LED, which, when illuminated, indicates the data protection system is under attack and is rejecting suspect packets. The data protection system preferably registers the frequency of attacks and sends signals to alert LED 206 based on such information. In a preferred embodiment, alert LED 206 may contain a LED (e.g., red), which remains consistently illuminated during irregular attacks or blinks at regular intervals under heavy attack. In another preferred embodiment, alert LED 206 may contain a multi-colored LED, which similarly indicates when the system is under attack and is rejecting packets. However, with a multi-colored LED, the increase in frequency or intervals of attacks may be indicated by a change in color: for example, green (indicating no registered attacks by suspect packets) to yellow (indicating a few irregular attacks) to red (indicating more frequent attacks) to blinking red (indicating a heavy attack). The alert alarm may be reset by depresseing alert button 204.

In a preferred embodiment, speaker 55 or some form of audio transducer may be coupled to alarm controller 53 to also indicate the presence or severity of attacks (as described in connection with FIG. 3). For example, when the data protection system is under heavy attack and alert LED 206 is blinking (e.g., red), an alarm signal may be transmitted to speaker 55 to emit audio information to indicate a suspected severe attack or emergency. Alarm-type information may also be coupled to the internal network (such as via a UDP packet, as described elsewhere

Ex.1002
CISCO SYSTEMS, INC. / Page 228 of 256

herein), and thus transmit alarm information over the network to a software interface on the desktop. In other embodiments of the data protection system, an array of different features, including buttons, LEDs, alarms, and graphical user interfaces, may be utilized to indicate the class, frequency and severity of attacks on the system.

Adjacent to alert button 204 on the external network side of the case preferably is protection button 208, which is coupled to protection-on LED 212 and protection-off LED 214. When protection button 208 is set in the "on" position, protection-on LED 212 preferably illuminates red and the filtering system is enabled; when protection button 208 is set in the "off" position, protection-off LED 214 preferably illuminates yellow and the filtering system is disabled. As will be appreciated, the particular colors utilized are exemplary.

Still referring to FIG. 10, power LED 210 is coupled in a manner to indicate power is being provided via power supply connector 190. When power LED 210 is illuminated (e.g., green), it indicates the power supply is providing power to the data protection system. It should be noted that in the illustrated embodiment, the present invention does not require an on/off switch for the power supply because the system is designed to be enabled once a DC power supply is provided. As previously described, reset button 182 is coupled to controller 164 and may be used to initiate loading or re-loading of the PLD code.

Adjacent to reset button 182 is update button 176, which is coupled to update-enabled LED 218 and update-disabled LED 220, as well as PLD 162 (as illustrated in FIG. 9). As previously described, an update program preferably is utilized to update the logic programming and rules tables. Preferably, after pressing update button 176, the data protection system is automatically restarted, causing the new PLD code to load. The load version bit preferably will be set in the flash configuration header, which causes the system to load using the new program file. In a preferred embodiment, update-enabled LED 218 will illuminate in green to indicate the data protection system is ready to receive the new updated programming. After the update begins, the system may continually flash update-enabled LED 218 until the successful completion of the update; LED 218 is extinguished upon successful completion of this process. However, if an update is incomplete and fails to occur, update-failed LED 220 may illuminate in red and blink. The user extinguishes LED 220 by pressing the update button a second time. If possible, the data protection system may generate a UDP packet to inform the internal client of the reason for the failure. As an additional example, if the system contains an LCD, it may display an error code.

Ex.1002
CISCO SYSTEMS, INC. / Page 229 of 256

The data protection system will continue to filter packets after update-failure LED 220 is extinguished. LED 216 is preferably provided to be illuminated when the system is operating and filtering packets in the manner described.In addition to the various toggles in a preferred embodiment of the present invention, additional types of components may be used to enter filtering criteria and/or selectively enable or control the filtering, such as a LCD display coupled with input buttons, a touch screen, an audio input for speech recognition, and/or a clock. Thus, filtering decisions may be made based on such switch inputs, audio commands, time of day or date, etc.

As further illustrated in FIG. 10, a removable logo disk 222 may be located on a preferred embodiment of the case. This removable disk may include a company logo, registered trademark, and/or other copyrighted material that may be valuable for branding and marketing the data protection system under a separate wholesaler. The disk is thus removable and replaceable for a variety of branding purposes.

In an alternate embodiment, security levels switch 223 may be implemented to prevent stateful relaxation, in which a stateful to non-stateful transition may occur during state register exhaustion. As illustrated in FIG. 8, security levels switch 223 may preferably include a variety of features that prevent stateful relaxation, such as timers, protocol-specific filters, and other rules-based filters. For example, switch 223 may be configured for three positions: one which allows FTP protocols, but does not allow DNS protocols; another which allows DNS protocols, but does not allow FTP; and a third which may serve as an emergency back-up feature and block all network traffic.

In other embodiments, different designs may be used in accordance with the present invention, incorporating various buttons, switches, LEDs, ports, cables, slots, connectors, plug-ins, speakers, and other audio transducers, which in turn may be embodied in a variety of external case shapes, as may be necessary. As will be appreciated, the filtering criteria may be dependent upon physical switch position, packet characteristics, clock time, and/or user-specified criteria, all of which may be entered through one or more physical input device(s). Such a physical input device, for example, may be comprised of one or more switches (such as a toggle switch, button switch, or multi-state switch), an audio input device, or display input device. The user-specified criteria may be transferred from the configuration software to the system using a network protocol, infrared port, or cable attachment.

Ex.1002
CISCO SYSTEMS, INC. / Page 230 of 256

FIGS. 11and 12 are flow diagrams illustrating examples of "SYN flood" protection in accordance with preferred embodiments of the present invention. Such SYN flood protection is optionally provided as an additional computer protection mechanism in accordance with certain preferred embodiments.

As is known in the art, SYN flood is a common type of "Denial of Service" attack, in which a target host is flooded with TCP connection requests. In the process of exchanging data in a three-way handshake, source addresses and source TCP ports of various connection request packets are random or missing. In a three-way handshake, the system registers a request from an IP address, then sends a response to that address based on its source, and waits for the reply from that address.

As illustrated in FIG. 11, the data protection system waits for a packet from external PHY 14 (as illustrated in FIG. 2) at step 224. When the system receives a packet from the external PHY, it compares the IP address and ports to the flood list entries at step 226, then proceeds to step 228. At step 228, the system determines whether the packet type is TCP, the ACK bit is set, and the packet matches an entry in the flood list. If these criteria are met, then the system proceeds to step 230, where the packet is removed from the flood list. If the packet is removed from the flood list, then the system returns to step 224 and waits for the next packet from the external PHY. Otherwise, if the criteria at step 228 are not met, then the system proceeds to step 232, where the system determines whether the packet type is TCP, the SYN bit is set and the ACK bit is not set. If the criteria at step 232 are met, then the system proceeds to step 234; otherwise, the system returns to step 224. At step 234, the system determines if the flood list is full and if the client has reached the maximum connection requests. If the flood list is not full, then the system returns to step 224 to wait for more packets from the external PHY. However, if the flood list is full at step 234, then the system proceeds to step 236, where the packet is junked and the system returns to step 224.

As illustrated in FIG. 12, the data protection system also waits for a packet from internal PHY 18 (as illustrated in FIG. 2) at step 238. When the system receives a packet from the internal PHY, it accesses the flood list location and writes the bits into the list, swapping ACK bits as well as MAC, IP and port addresses. The system then proceeds to step 242, where it determines if the packet type is TCP and the SYN and ACK bits are set. If the criteria at step 242 are met, then the system proceeds to step 244; if not, then the system returns to step 238 and

Ex.1002
CISCO SYSTEMS, INC. / Page 231 of 256

waits for another packet from the internal PHY. At step 244, the SYN flag is unset and number 1 is added to the new ACK number. The system then proceeds to step 246, where it determines if the flood list is full. If the flood list at step 246 is full, then the Reset flag is set, the checksums for TCP, IP and Ethernet protocols are recalculated, and the Reset packet is transmitted. The system then returns to step 238. However, if the flood list at step 246 is not full, then the system proceeds to step 248, where the checksums for TCP, IP and Ethernet protocols are recalculated and the ACK packet is transmitted. The system then proceeds to step 252, where the recalculated packet is added to the flood list and the system returns to step 238, where it waits for another packet from the internal network.

In accordance with the present invention, SYN flood protection as described does not require either an IP or MAC address. The data protection system uses the destination MAC address as the source Ethernet address when framing the response packet that completes the TCP three-way handshake. In all cases, when forming the new packet, the source and destination header information is swapped, so that the source IP address and port become the destination IP address and port. It should be appreciated that SYN flood protection, as preferably implemented by the system, does not buffer the incoming packet, but builds the TCP response packet in real-time. The new TCP packet is placed in a queue for transmission at the earliest time possible based on the rules dictated by the link level protocol. .

As illustrated in FIG. 13, in order to keep the flood lists from filling up with stale entries, the data protection system must free up state registers when the protocol information is not accessed within specific time frames, such as when a three-way handshake is initiated by a client, but the transaction is not closed. After the system receives a packet, it for one second at step 254, then proceeds to step 256, where the packet is checked against each flood list entry and passed to step 258. At step 258, the system checks for stale entries (or garbage collection) in the flood lists and proceeds to step 260, where it determines if time has expired. If time has expired at step 260, then the packet proceeds to step 262; if not, then the system returns to step 256 to check each flood entry list again. At step 262, the system unsets the ACK bit and sets the Reset flag, adds 1 to the sequence number, recalculating the checksums, and then recalculates the checksums for TCP, IP, and Ethernet protocols. The system proceeds to step 264, where the Reset packet is transmitted; it then proceeds to step 266 and removes the packet from the flood list. The system

Ex.1002
CISCO SYSTEMS, INC. / Page 232 of 256

then proceeds to step 256. It should be noted that if time expires for the request, then the system sends the Reset flag, terminating the connection.

Although the invention has been described in conjunction with specific preferred and other embodiments, it is evident that many substitutions, alternatives and variations will be apparent to those skilled in the art in light of the foregoing description. Accordingly, the invention is intended to embrace all of the alternatives and variations that fall within the spirit and scope of the appended claims. For example, it should be understood that, in accordance with the various alternative embodiments described herein, various systems, and uses and methods based on such systems, may be obtained. The various refinements and alternative and additional features also described may be combined to provide additional advantageous combinations and the like in accordance with the present invention. As will also be understood by those skilled in the art based on the foregoing description, various aspects of the preferred embodiments may be used in various subcombinations to achieve at least certain of the benefits and attributes described herein, and such subcombinations also are within the scope of the present invention. All such refinements, enhancements and further uses of the present invention are within the scope of the present invention.

Ex.1002
CISCO SYSTEMS, INC. / Page 233 of 256

What is claimed is:

1. A method for communicating data between an external computing system and an internal computing system over a packet-based network, comprising the steps of:

receiving a communication packet from the external computing system over the network, the packet having at least a first portion and an end portion, and transmitting the packet to the internal computing system;

in parallel with the step of receiving and transmitting the packet, determining characteristics of the packet from the first portion;

in parallel with the step of receiving and transmitting the packet, performing a plurality of checks on the packet, wherein at least certain of the plurality of checks are performing in parallel with other of the plurality of checks;

in parallel with the step of receiving and transmitting the packet, determining if the packet should be a valid packet or an invalid packet based on the plurality of checks; and

after receiving the end portion of the packet, selectively altering the end portion of the packet based on whether the packet has been determined to be a valid packet or an invalid packet, wherein the packet is selectively altered to be invalid if it was determined that the packet should be an invalid packet.

2. The method of claim 1, wherein the packet is analyzed in real time to determine if the packet should be valid or invalid while the packet is being concurrently transmitted to the internal computing system.

3. The method of claim 1, wherein the packet is analyzed to determine if the packet is valid without the packet having been completely received and buffered.

4. The method of claim 1, wherein the packet is determined to be an invalid packet if it is determined that the packet contains a virus, is unauthorized or presents a risk of harm to the internal computing system.

5. The method of claim 1, wherein the plurality of checks are at least in part selectively performed based on a state of a physical switch.

6. The method of claim 5, wherein the physical switch comprises one or more user-controlled switches, wherein the plurality of checks are selectively performed based on a user-defined state of the one or more user-controlled switches.

Ex.1002
CISCO SYSTEMS, INC. / Page 234 of 256

7. The method of claim 6, wherein the one or more user-controlled switches comprise at least one user-controlled switch that controls a configuration or reconfiguration of a circuit that performs the plurality of checks.

8. The method of claim 7, wherein the configuration or reconfiguration of the circuit that performs the plurality of checks is performed without requiring user entry of configuration commands via software running on the internal computing system.

9. The method of claim 7, wherein the circuit that performs the plurality of checks is configured or reconfigured based on commands from the internal computing system and based on a state of the at least one user-controlled switch.

10. The method of claim 5, wherein at least a subset of the plurality of checks are selectively enabled or disabled based on the user-defined state of the user-controlled switches.

11. The method of claim 1, wherein the plurality of checks are performed with a programmable logic device, wherein logic within the programmable logic device is selectively programmed to perform the plurality of checks in parallel with the receiving and transmitting of the packet.

12. The method of claim 11, wherein a first physical interface circuit receives the packet from the network, wherein the packet is coupled to the programmable logic device, wherein the packet is coupled from the programmable logic device to a second physical interface circuit for transmission to the internal computing system.

13. The method of claim 12, wherein the programmable logic device performs the plurality of checks while the packet is being coupled from the first physical interface to the second physical interface.

14. The method of claim 1, wherein the plurality of checks are selectively performed based on a communication state between the external computing system and the internal computing system.

15. The method of claim 14, wherein the communication state comprises one or more network addresses and/or one or more port numbers.

16. The method of claim 16, wherein the network address comprises an IP address for the external computing system and/or the internal computing system.

17. The method of claim 1, further comprising the step of providing visual or audio feedback with one or more visual or audio feedback devices, wherein the one or more visual or

Ex.1002
CISCO SYSTEMS, INC. / Page 235 of 256

audio feedback devices selectively provide visual or audio feedback of the operation or status of a packet filter process.

18. The method of claim 17, wherein the one or more visual or audio feedback devices provide visual or audio feedback that a system performing the packet filter process is powered or operational.

19. The method of claim 18, wherein the one or more visual or audio feedback devices provide visual or audio feedback that the system performing the packet filter process is subjecting a packet to filtering criteria.

20. The method of claim 18, wherein the one or more visual or audio feedback devices provide visual or audio feedback that the system performing the packet filter process has rejected one or more packets.

21. The method of claim 17, wherein the one or more visual or audio feedback devices provide visual or audio feedback that the internal computing system is suspected to be under attack.

22. The method of claim 21, wherein the one or more visual or audio feedback devices provide visual or audio feedback of an estimated severity of the attack.

23. The method of claim 18, wherein the one or more visual or audio feedback devices provide visual or audio feedback of a state of the system performing the packet filter process until the one or more visual or audio feedback devices are reset by a user.

24. The method of claim 23, wherein the one or more visual or audio feedback devices are reset by the state of a physical switch.

25. The method of claim 18, wherein the one or more visual or audio feedback devices comprise at least one light source, wherein the light source is selectively controlled to provide information indicative of the operation or status of the system performing the packet filter process.

26. The method of claim 25, wherein the light source is controlled to have a first color or a second color depending on the operation or status of the system performing the packet filter process.

27. The method of claim 25, wherein the light source is controlled to selectively blink depending on the operation or status of the system performing the packet filter process.

Ex.1002
CISCO SYSTEMS, INC. / Page 236 of 256

28. The method of claim 27, wherein the light source is controlled to selectively blink at a rate that is indicative of a severity level of a suspected attack on the internal computing system.

29. The method of claim 25, wherein the at least one light source comprises an LED.

30. The method of claim 17, wherein the one or more visual or audio feedback devices comprise a speaker.

31. A system for filtering packets of data between at least an external network and an internal network, comprising:

a first interface circuit for coupling data to and from the external network;

a second interface circuit for coupling data to and from the internal network;

a programmable logic device coupled between the first interface circuit and the second interface circuit;

wherein, as a packet is being received and transmitted between the first and second interface circuits, the packet is simultaneously subjected to a plurality of filtering criteria by the programmable logic device, wherein an end portion of the packet is selectively altered by the programmable logic device based on the filtering criteria.

32. The system of claim 31, wherein the filtering criteria determine whether the packet is to be a valid packet or an invalid packet, wherein the packet is selectively altered to be invalid if it was determined that the packet should be an invalid packet.

33. The system of claim 31, wherein the programmable logic circuit includes at least first logic for determining characteristics of the packet being received and transmitted between the first and second interface circuits and at least a filter portion that subjects the packet to the plurality of filtering criteria while the packet is being received and transmitted between the first and second interface circuits.

34. The system of claim 33, wherein the filter portion includes at least a stateful filter portion and a non-stateful filter portion.

35. The system of claim 34, wherein the stateful filter portion subjects the packet to one or more stateful filtering criterion and the non-stateful filter portion subjects the packet to one or more non-stateful filtering criterion.

Ex.1002
CISCO SYSTEMS, INC. / Page 237 of 256

36. The system of claim 34, wherein the stateful filter portion subjects the packet to one or more stateful filtering criterion while the non-stateful filter portion subjects the packet to one or more non-stateful filtering criterion.

37. The system of claim 34, wherein a result aggregator logic receives one or more signals from the stateful filter portion and the non-stateful filter portion, wherein based on the received signals the result aggregator logic controls whether the packet is selectively altered to be invalid.

38. The system of claim 37, wherein the result aggregator logic receives a completion signal that indicates whether the stateful and/or non-stateful filter portions have subjected the packet to all of the filtering criteria.

39. The system of claim 38, wherein, if the completion signal is not received by the result aggregator logic by a time when the end portion of the packet has been received, then the packet is selectively altered by the programmable logic device to be invalid.

40. The system of claim 31, wherein the packet is subjected to the plurality of filtering criteria in parallel with the packet being received and transmitted between the first and second interface circuits, wherein a decision is made whether to selectively alter the packet to be invalid by a time when the end portion of the packet has been received.

41. The system of claim 31, wherein the packet is subjected to the plurality of filtering criteria in real time with the packet being received and transmitted between the first and second interface circuits.

42. The system of claim 31, further comprising one or more physical switches, wherein the packet is selectively subjected to the filtering criteria based on the state of the one or more physical switches.

43. The system of claim 42, wherein the state of the one or more physical switches selectively enable or disable a predetermined portion of the filtering criteria.

44. The system of claim 42, wherein the state of the one or more physical switches selectively enable or disable a predetermined portion of the filtering criteria based on whether a computer coupled to the internal network is controlled to operate in a client mode or a sever mode.

Ex.1002
CISCO SYSTEMS, INC. / Page 238 of 256

45. The system of claim 42, wherein the state of the one or more physical switches selectively controls a configuration or reconfiguration operation of the programmable logic device.

46. The system of claim 42, wherein the state of the one or more physical switches selectively controls a reset operation of the programmable logic device.

47. The system of claim 31, further comprising one or more visual or audio feedback devices, wherein the one or more visual or audio feedback devices selectively provide visual or audio feedback of the operation or status of the system.

48. The system of claim 47, wherein the one or more visual or audio feedback devices provide visual or audio feedback that the system is powered or operational.

49. The system of claim 47, wherein the one or more visual or audio feedback devices provide visual or audio feedback that the system is subjecting a packet to the filtering criteria.

50. The system of claim 47, wherein the one or more visual or audio feedback devices provide visual or audio feedback that the system has rejected one or more packets.

51. The system of claim 47, wherein the one or more visual or audio feedback devices provide visual or audio feedback that a computer coupled to the internal network is suspected to be under attack.

52. The system of claim 51, wherein the one or more visual or audio feedback devices provide visual or audio feedback of an estimated severity of the attack.

53. The system of claim 47, wherein the one or more visual or audio feedback devices provide visual or audio feedback of a state of the system until the one or more visual or audio feedback devices are reset by a user.

54. The system of claim 53, wherein the one or more visual or audio feedback devices are reset by the state of a physical switch.

55. The system of claim 47, wherein the one or more visual or audio feedback devices comprise at least one light source, wherein the light source is selectively controlled to provide information indicative of the operation or status of the system.

56. The system of claim 55, wherein the light source is controlled to have a first color or a second color depending on the operation or status of the system.

57. The system of claim 55, wherein the light source is controlled to selectively blink depending on the operation or status of the system.

Ex.1002
CISCO SYSTEMS, INC. / Page 239 of 256

58. The system of claim 57, wherein the light source is controlled to selectively blink at a rate that is indicative of a severity level of a suspected attack on a computer coupled to the internal network.

59. The system of claim 55, wherein the at least one light source comprises an LED.

60. The system of claim 47, wherein the one or more visual or audio feedback devices comprise a speaker.

61. The system of claim 36, wherein the stateful filtering criteria are dependent upon physical switch position, packet characteristics, clock time and/or user-specified criteria.

62. The system of claim 61, wherein the user-specified criteria are entered via a physical input device.

63. The system of claim 62, wherein the physical input device comprises one or more switches, an audio input device, or display input device.

64. The system of claim 61, wherein the user specified criteria are entered via a configuration software.

65. The system of claim 64, wherein the user specified criteria are transferred from the configuration software to the system using a network protocol, infrared port or cable attachment.

66. The system of claim 63, wherein the one or more switches comprise a toggle switch, button switch or multi-state switch.

Ex.1002
CISCO SYSTEMS, INC. / Page 240 of 256

Abstract

Methods and systems for firewall/data protection that filters data packets in real time and without packet buffering are disclosed. A data packet filtering hub, which may be implemented as part of a switch or router, receives a packet on one link, reshapes the electrical signal, and transmits it to one or more other links. During this process, a number of filters checks are performed in parallel, resulting in a decision about whether each packet should or should not be invalidated by the time that the last bit is transmitted. To execute this task, the filtering hub performs rules-based filtering on several levels simultaneously, preferably with a programmable logic or other hardware device. Various methods for packet filtering in real time and without buffering with programmable logic are disclosed. The system may include constituent elements of a stateful packet filtering hub, such as microprocessors, controllers, and integrated circuits. The system may be reset, enabled, disabled, configured, and/or reconfigured with toggles or other physical switches. Audio and visual feedback may be provided regarding the operation and status of the system.

Ex.1002
CISCO SYSTEMS, INC. / Page 241 of 256

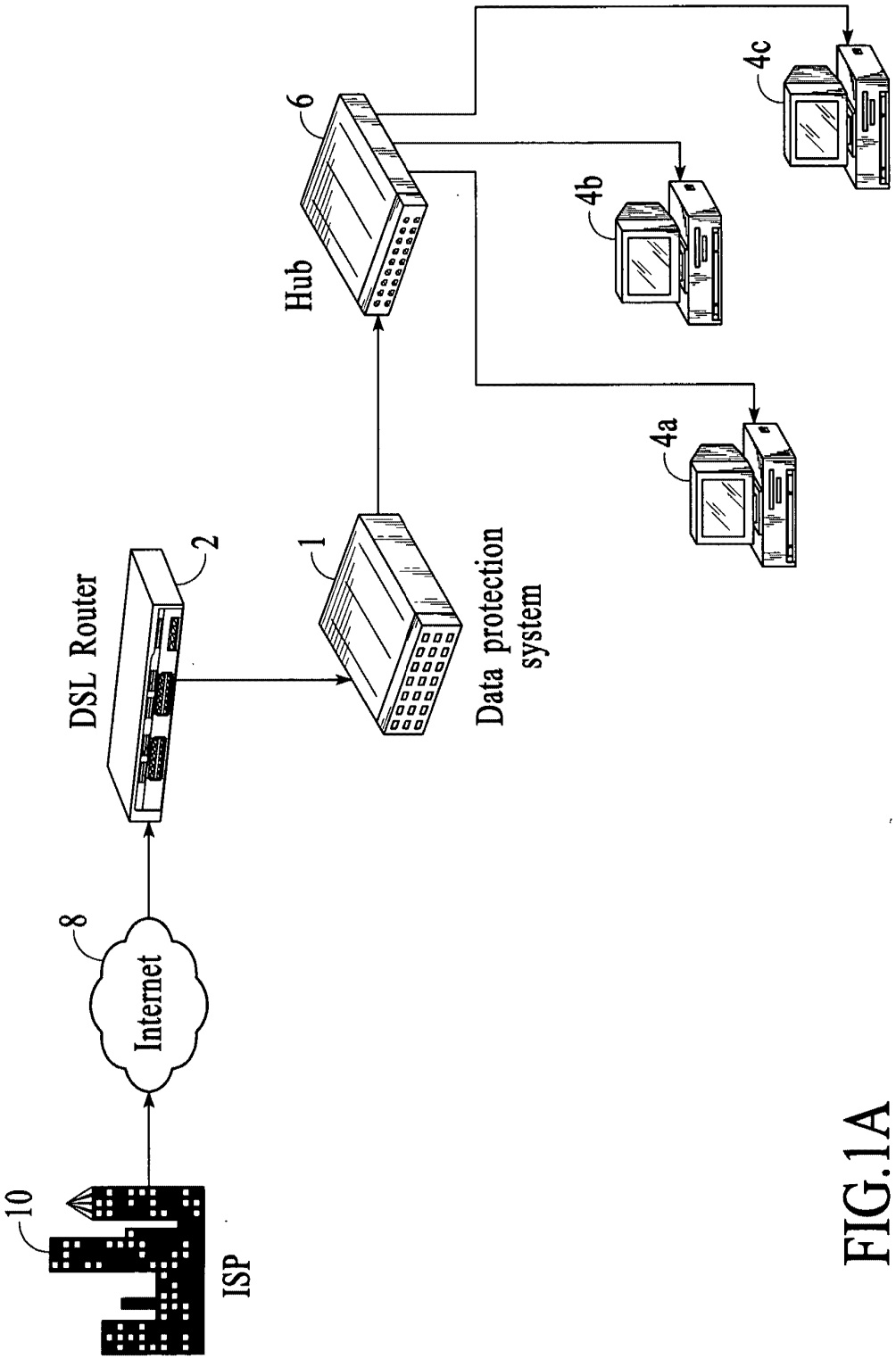
10
ISP
8
Internet
DSL Router
2
1
Data protection system
Hub
6
4a
4b
4c

FIG.1A

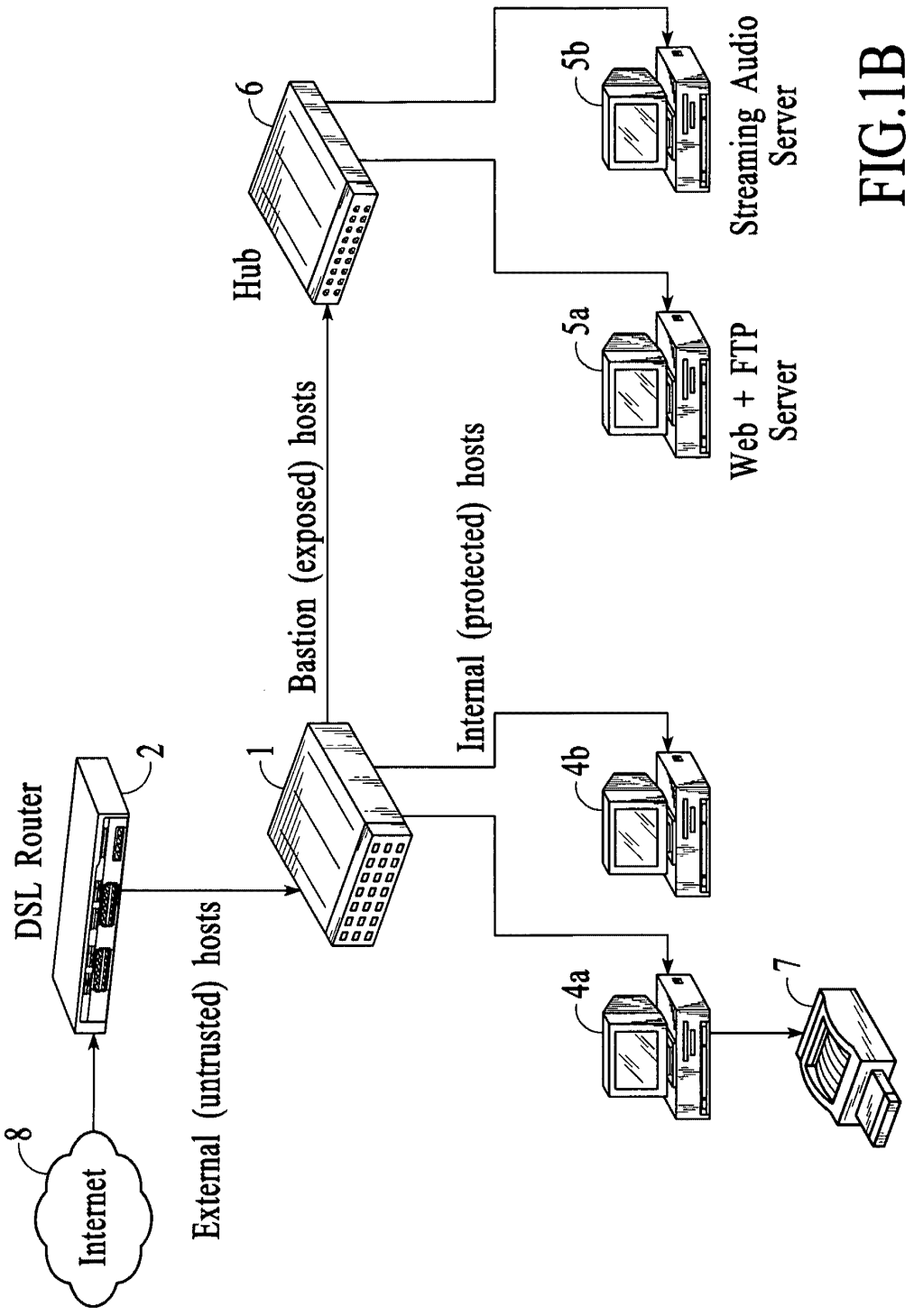
Internet
8
DSL Router
2
External (untrusted) hosts
1
Bastion (exposed) hosts
Hub
6
Internal (protected) hosts
4a
4b
7
5a
Web + FTP Server
5b
Streaming Audio Server

FIG.1B

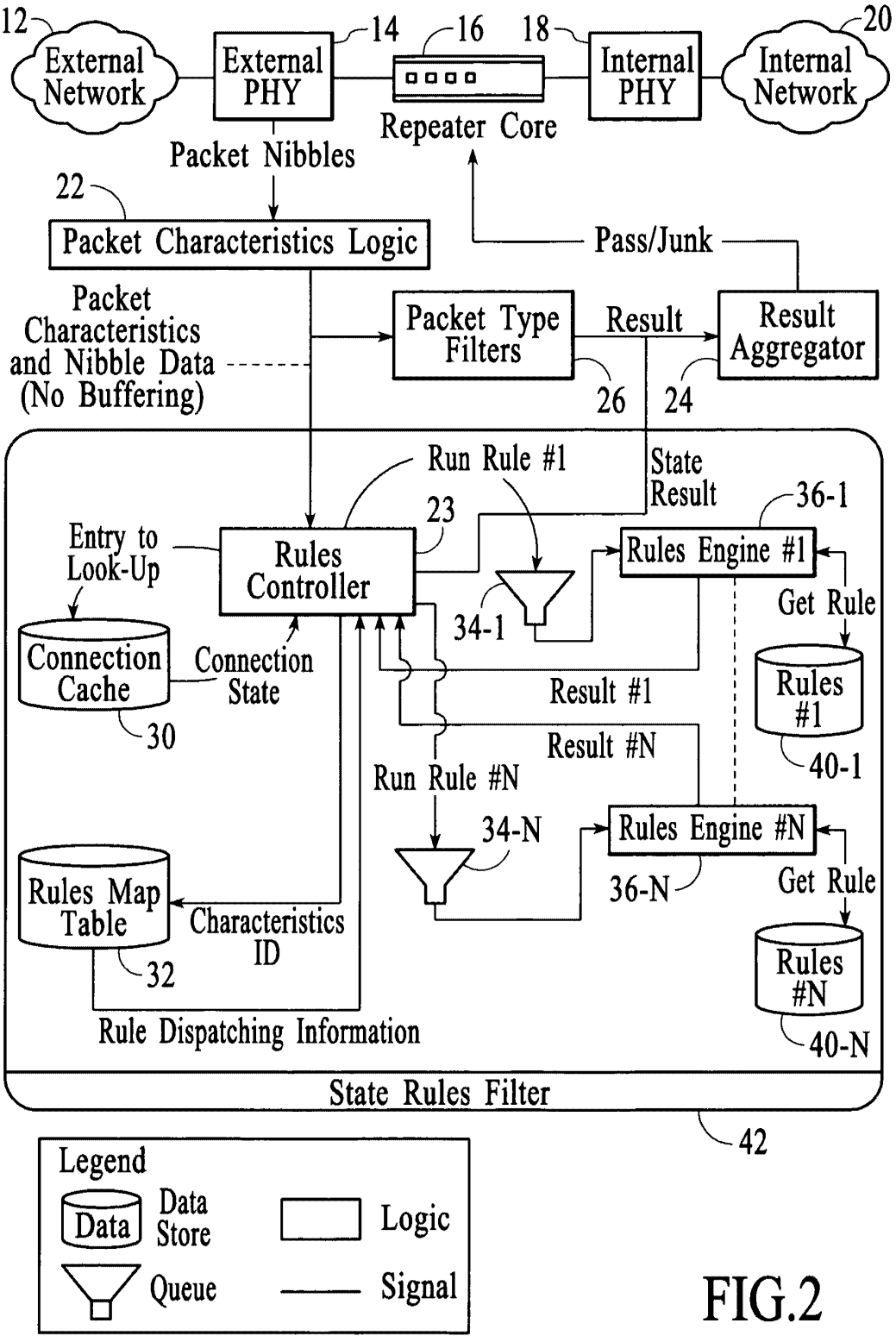
12
External Network
External PHY
14
16
18
Internal PHY
20
Internal Network
Repeater Core
Packet Nibbles
22
Packet Characteristics Logic
Pass/Junk
Packet Characteristics and Nibble Data (No Buffering)
Packet Type Filters
Result
Result Aggregator
26
24
Run Rule #1
State Result
23
36-1
Entry to Look-Up
Rules Controller
Rules Engine #1
Get Rule
34-1
Connection Cache
Connection State
30
Result #1
Rules #1
40-1
Result #N
Run Rule #N
34-N
Rules Engine #N
36-N
Get Rule
Rules Map Table
Characteristics ID
32
Rules #N
40-N
Rule Dispatching Information
State Rules Filter
42
Legend
Data
Data Store
Logic
Queue
Signal

FIG.2

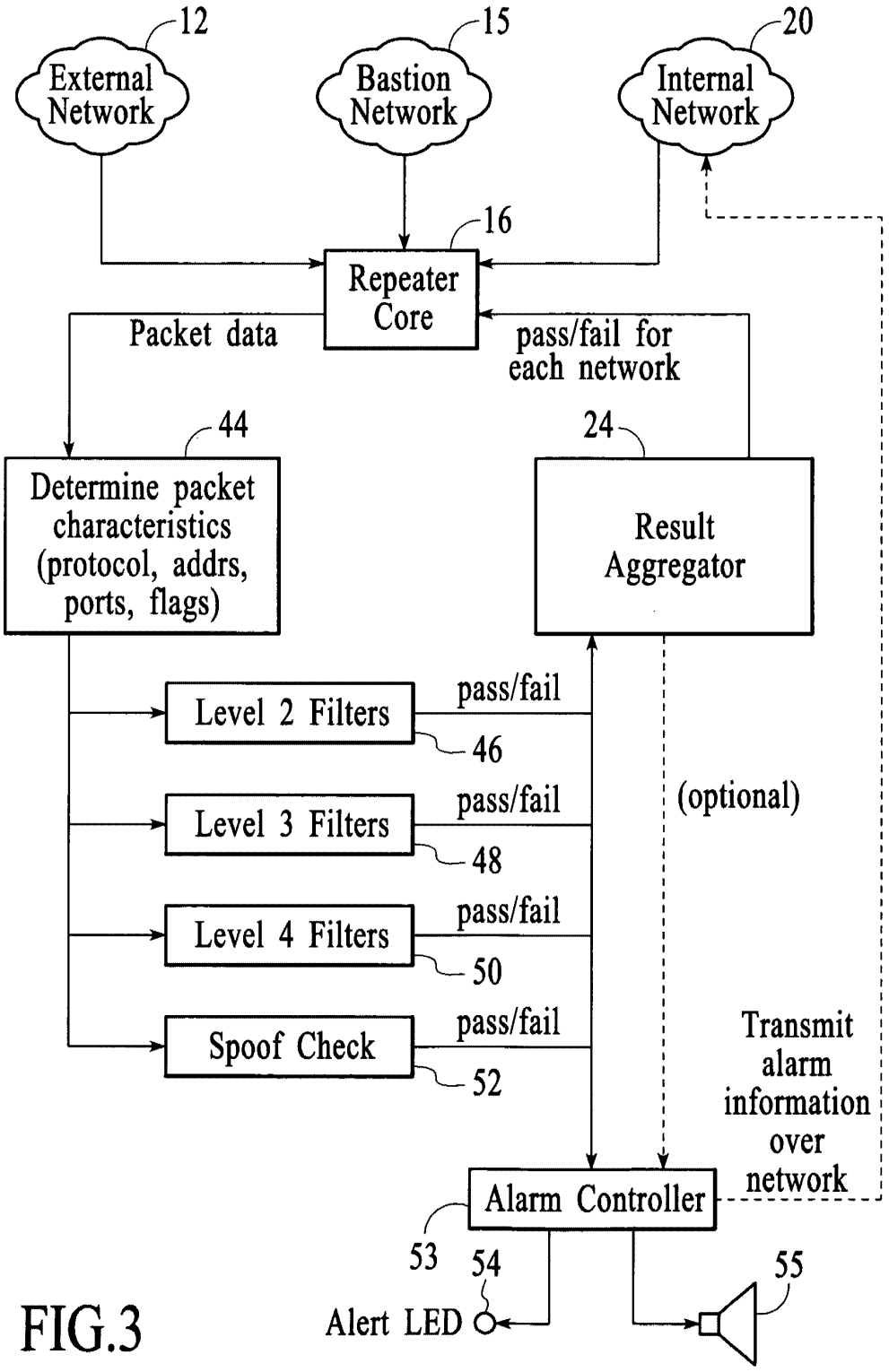
12
External Network
15
Bastion Network
20
Internal Network
16
Repeater Core
Packet data
pass/fail for each network
44
Determine packet characteristics (protocol, addrs, ports, flags)
24
Result Aggregator
Level 2 Filters
pass/fail
46
Level 3 Filters
pass/fail
48
Level 4 Filters
pass/fail
50
Spoof Check
pass/fail
52
(optional)
Transmit alarm information over network
Alarm Controller
53
54
Alert LED
55

FIG.3

FIG.4

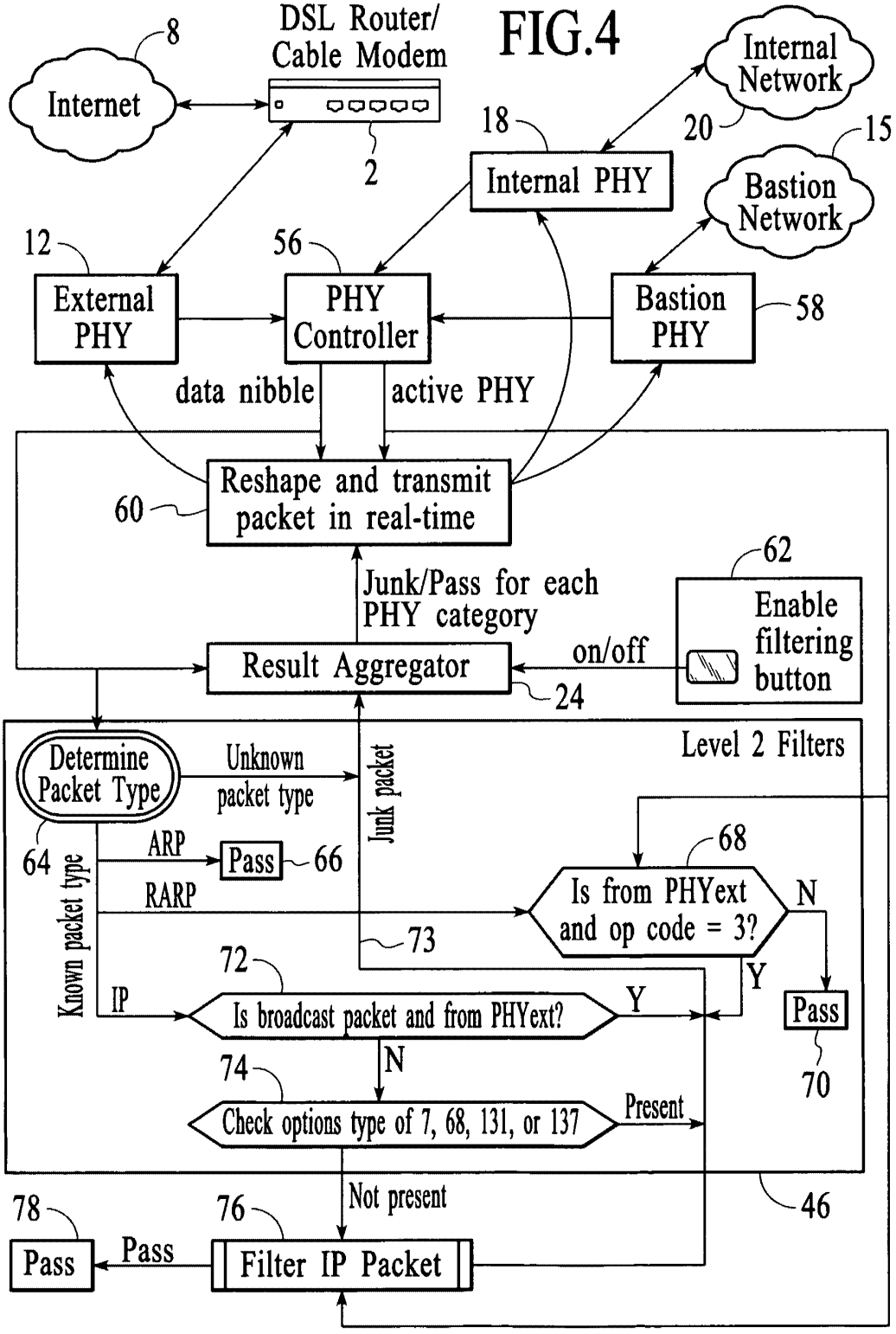
8
DSL Router/
Cable Modem
Internet
2
Internal
Network
20
15
18
Internal PHY
Bastion
Network
12
56
External
PHY
PHY
Controller
Bastion
PHY
58
data nibble
active PHY
Reshape and transmit
packet in real-time
60
62
Junk/Pass for each
PHY category
Enable
filtering
button
on/off
Result Aggregator
24
Level 2 Filters
Determine
Packet Type
Unknown
packet type
Junk packet
64
ARP
Pass
66
RARP
68
Is from PHYext
and op code = 3?
N
Y
73
72
Known packet type
IP
Is broadcast packet and from PHYext?
Y
Pass
70
N
74
Check options type of 7, 68, 131, or 137
Present
Not present
46
78
76
Pass
Pass
Filter IP Packet

FIG.6

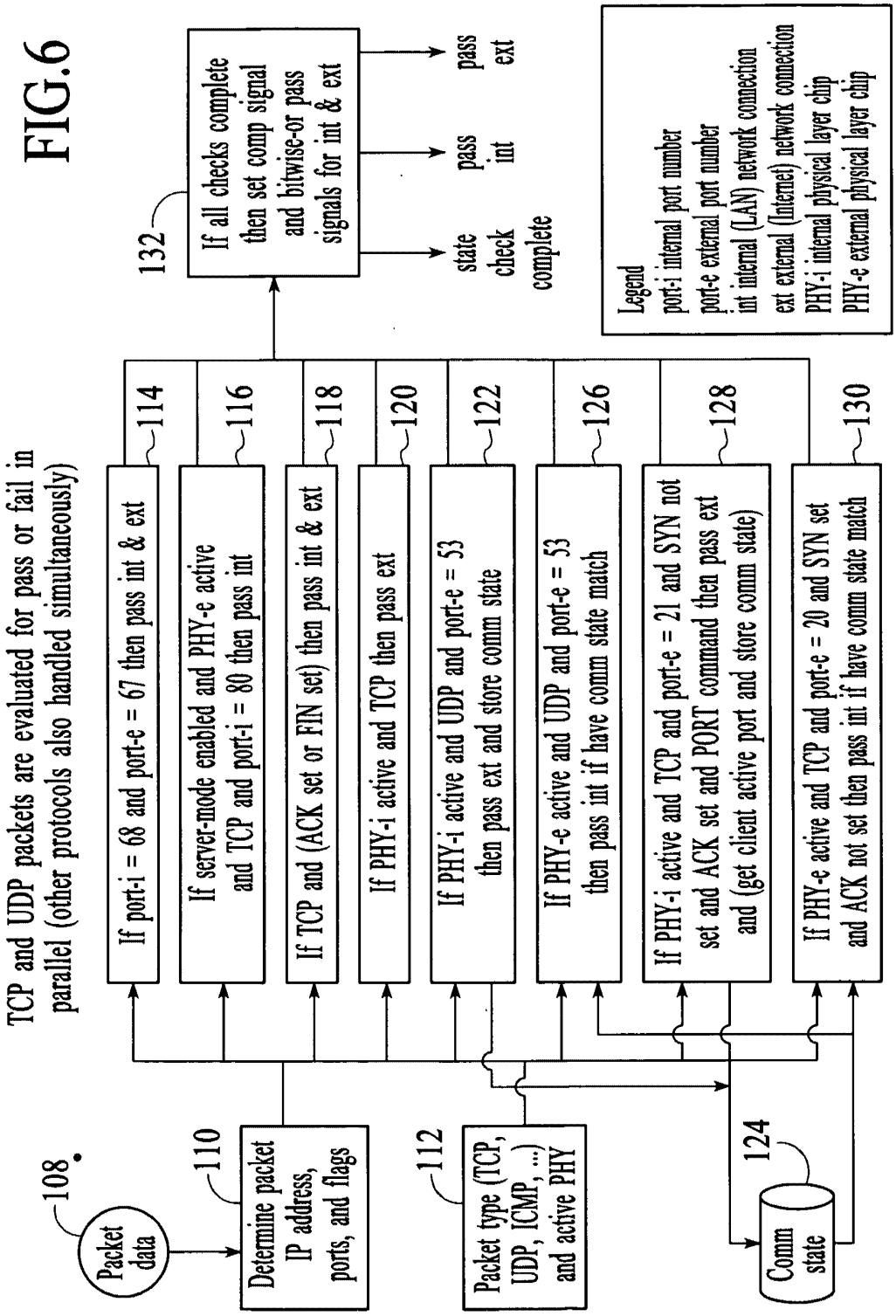
TCP and UDP packets are evaluated for pass or fail in parallel (other protocols also handled simultaneously)
108
Packet data
110
Determine packet IP address, ports, and flags
112
Packet type (TCP, UDP, ICMP, ...) and active PHY
124
Comm state
If port-i = 68 and port-e = 67 then pass int & ext
114
If server-mode enabled and PHY-e active and TCP and port-i = 80 then pass int
116
If TCP and (ACK set or FIN set) then pass int & ext
118
If PHY-i active and TCP then pass ext
120
If PHY-i active and UDP and port-e = 53 then pass ext and store comm state
122
If PHY-e active and UDP and port-e = 53 then pass int if have comm state match
126
If PHY-i active and TCP and port-e = 21 and SYN not set and ACK set and PORT command then pass ext and (get client active port and store comm state)
128
If PHY-e active and TCP and port-e = 20 and SYN set and ACK not set then pass int if have comm state match
130
If all checks complete then set comp signal and bitwise-or pass signals for int & ext
132
state check complete
pass int
pass ext
Legend
port-i internal port number
port-e external port number
int internal (LAN) network connection
ext external (Internet) network connection
PHY-i internal physical layer chip
PHY-e external physical layer chip

FIG.7

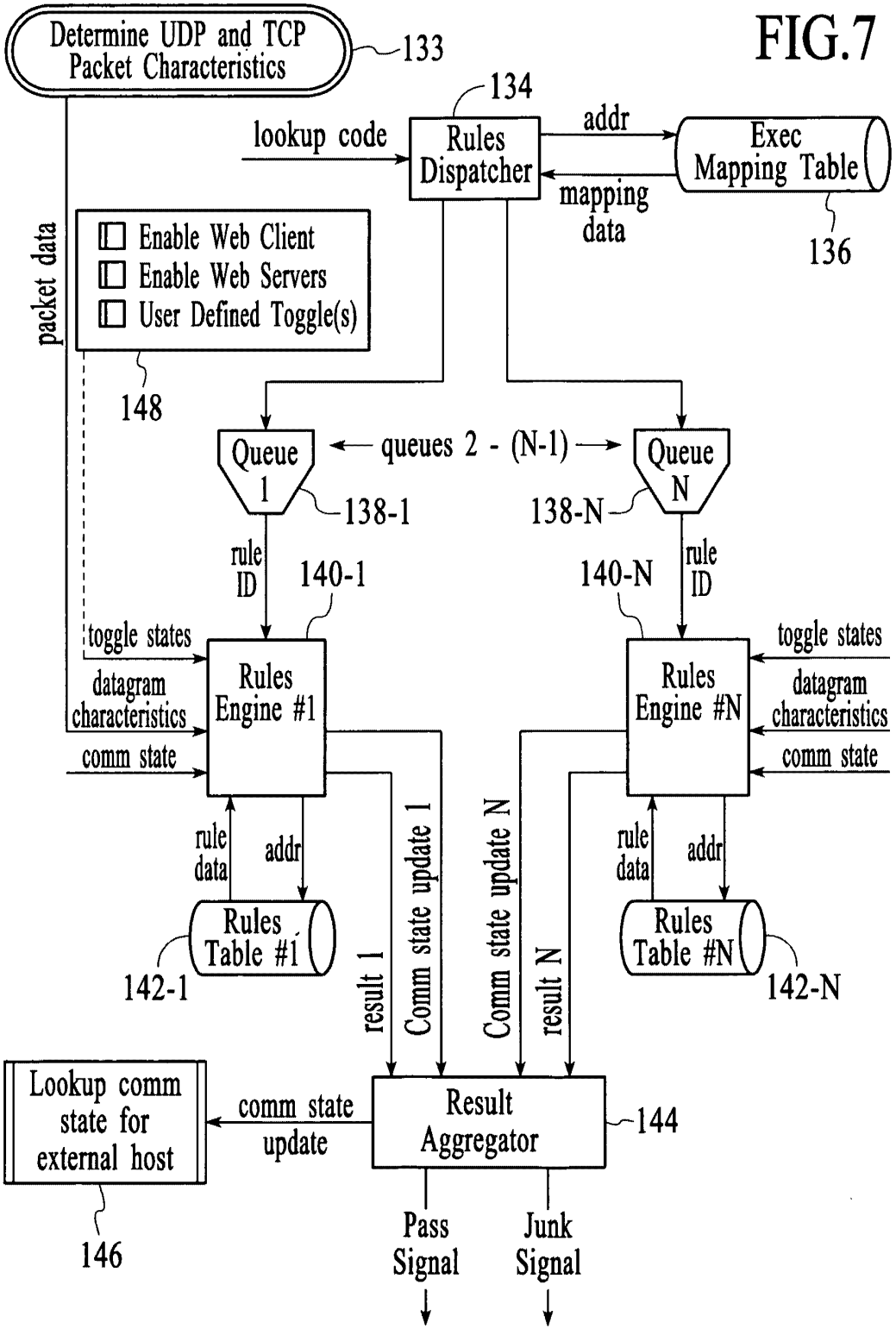
Determine UDP and TCP Packet Characteristics
133
134
lookup code
Rules Dispatcher
addr
Exec Mapping Table
mapping data
136
packet data
Enable Web Client
Enable Web Servers
User Defined Toggle(s)
148
Queue 1
queues 2 - (N-1)
Queue N
138-1
138-N
rule ID
140-1
140-N
rule ID
toggle states
datagram characteristics
comm state
Rules Engine #1
Rules Engine #N
toggle states
datagram characteristics
comm state
rule data
addr
rule data
addr
Rules Table #1
Rules Table #N
142-1
142-N
result 1
Comm state update 1
Comm state update N
result N
Lookup comm state for external host
comm state update
Result Aggregator
144
146
Pass Signal
Junk Signal

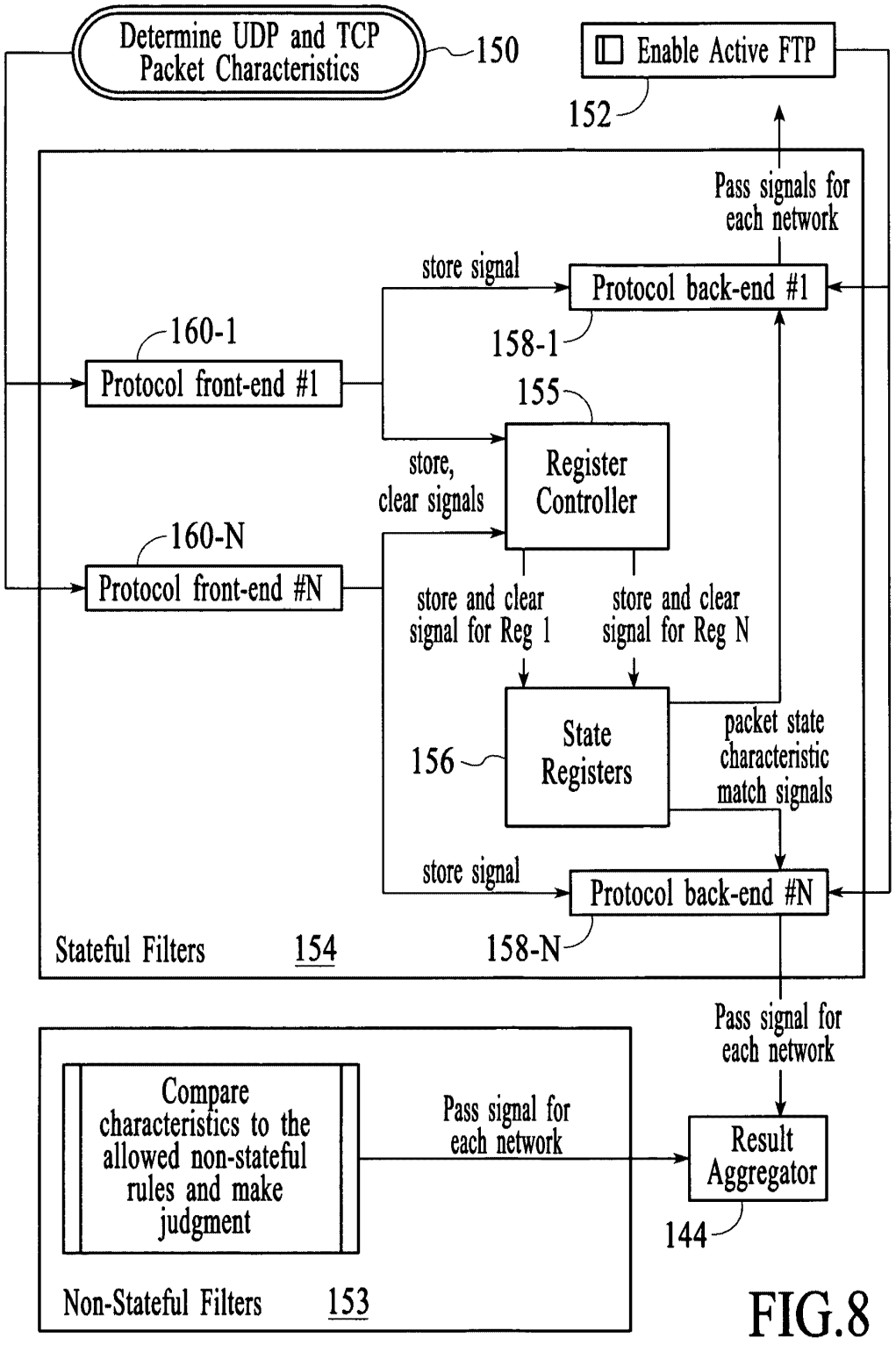
Determine UDP and TCP Packet Characteristics
150
Enable Active FTP
152
Pass signals for each network
store signal
Protocol back-end #1
158-1
160-1
Protocol front-end #1
155
Register Controller
store, clear signals
160-N
Protocol front-end #N
store and clear signal for Reg 1
store and clear signal for Reg N
State Registers
156
packet state characteristic match signals
store signal
Protocol back-end #N
Stateful Filters 154
158-N
Pass signal for each network
Compare characteristics to the allowed non-stateful rules and make judgment
Pass signal for each network
Result Aggregator
144
Non-Stateful Filters 153

FIG.8

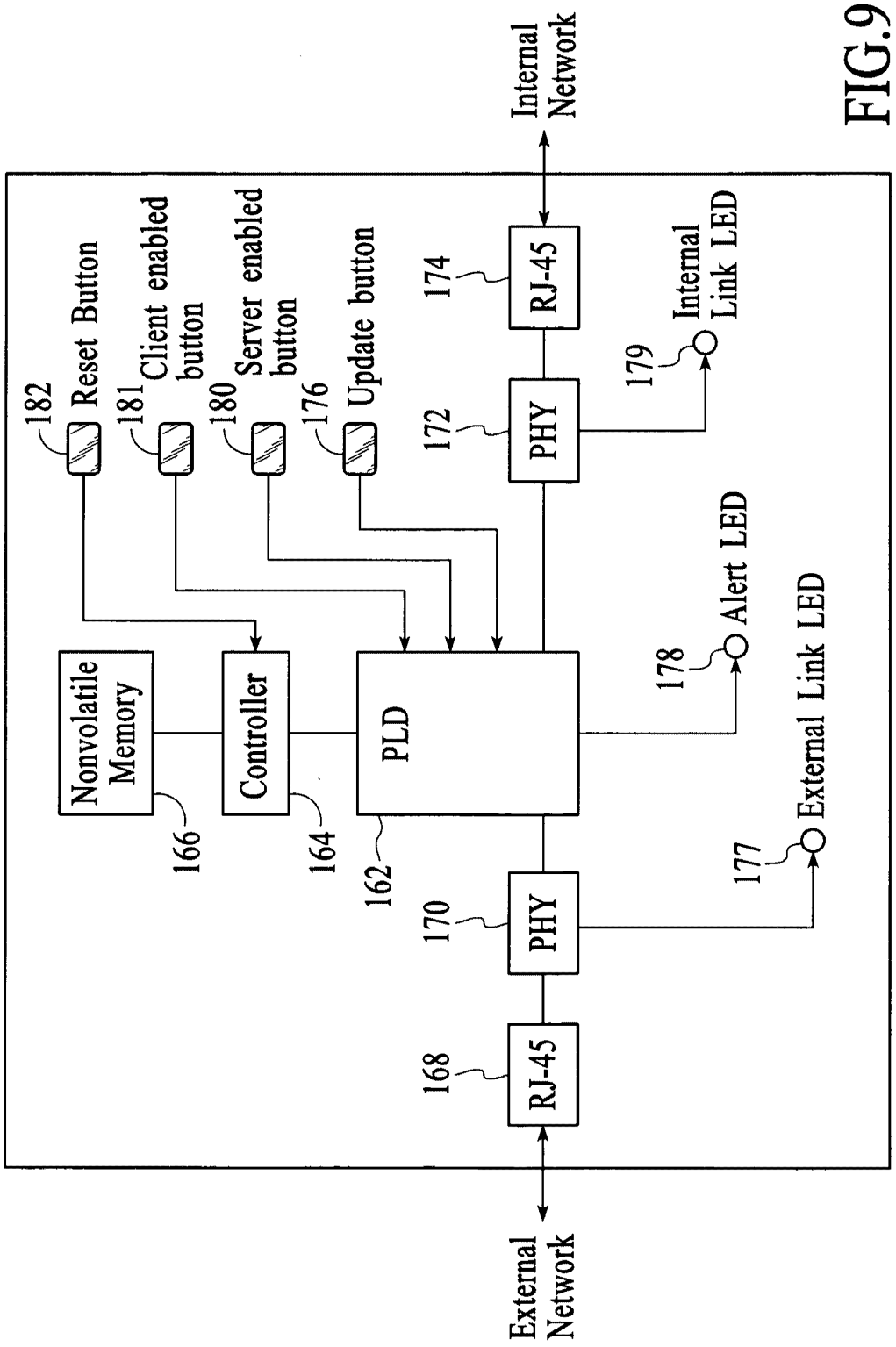
Internal Network
Reset Button
Client enabled button
Server enabled button
Update button
182
181
180
176
174
RJ-45
172
PHY
179
Internal Link LED
Nonvolatile Memory
Controller
PLD
178
Alert LED
External Link LED
166
164
162
170
PHY
177
168
RJ-45
External Network

FIG.9

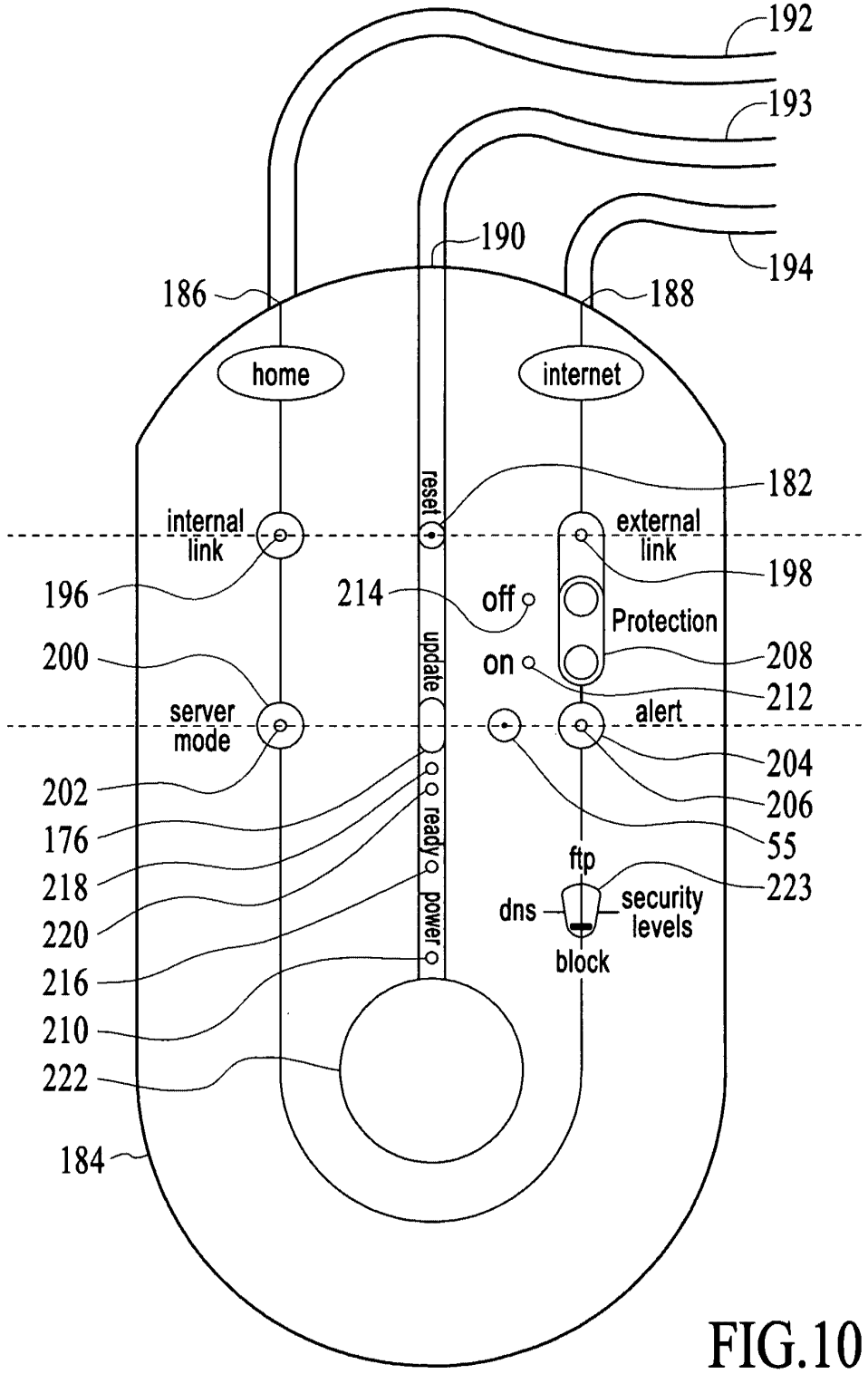
192
193
190
194
186
188
home
internet
reset
182
internal link
external link
196
214
off
198
Protection
200
update
on
208
212
server mode
alert
204
202
206
176
ready
55
218
ftp
223
220
power
dns
security levels
216
block
210
222
184

FIG.10

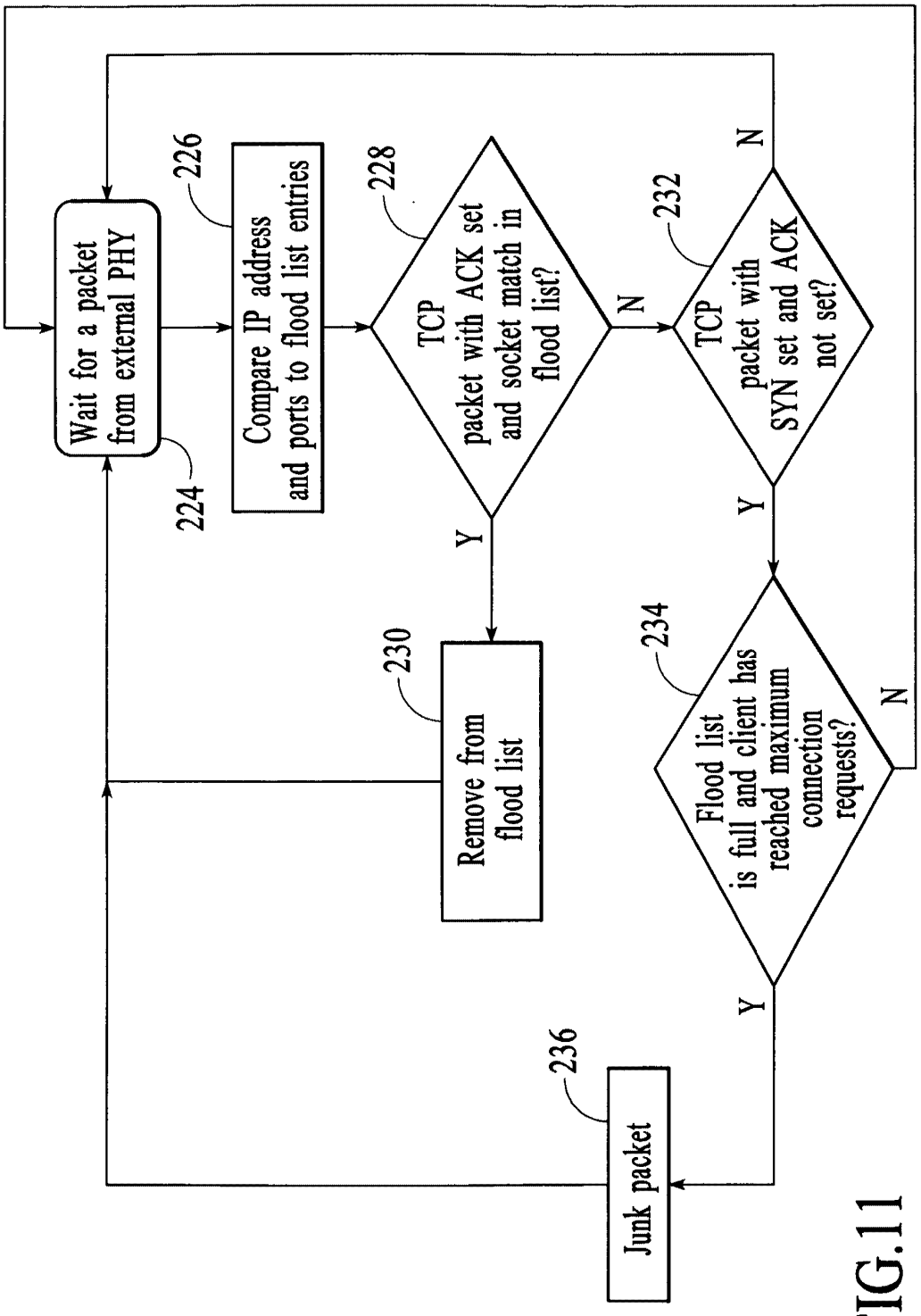
Wait for a packet from external PHY
224
Compare IP address and ports to flood list entries
226
TCP packet with ACK set and socket match in flood list?
228
Y
N
Remove from flood list
230
TCP packet with SYN set and ACK not set?
232
Y
N
Flood list is full and client has reached maximum connection requests?
234
Y
N
Junk packet
236

FIG.11

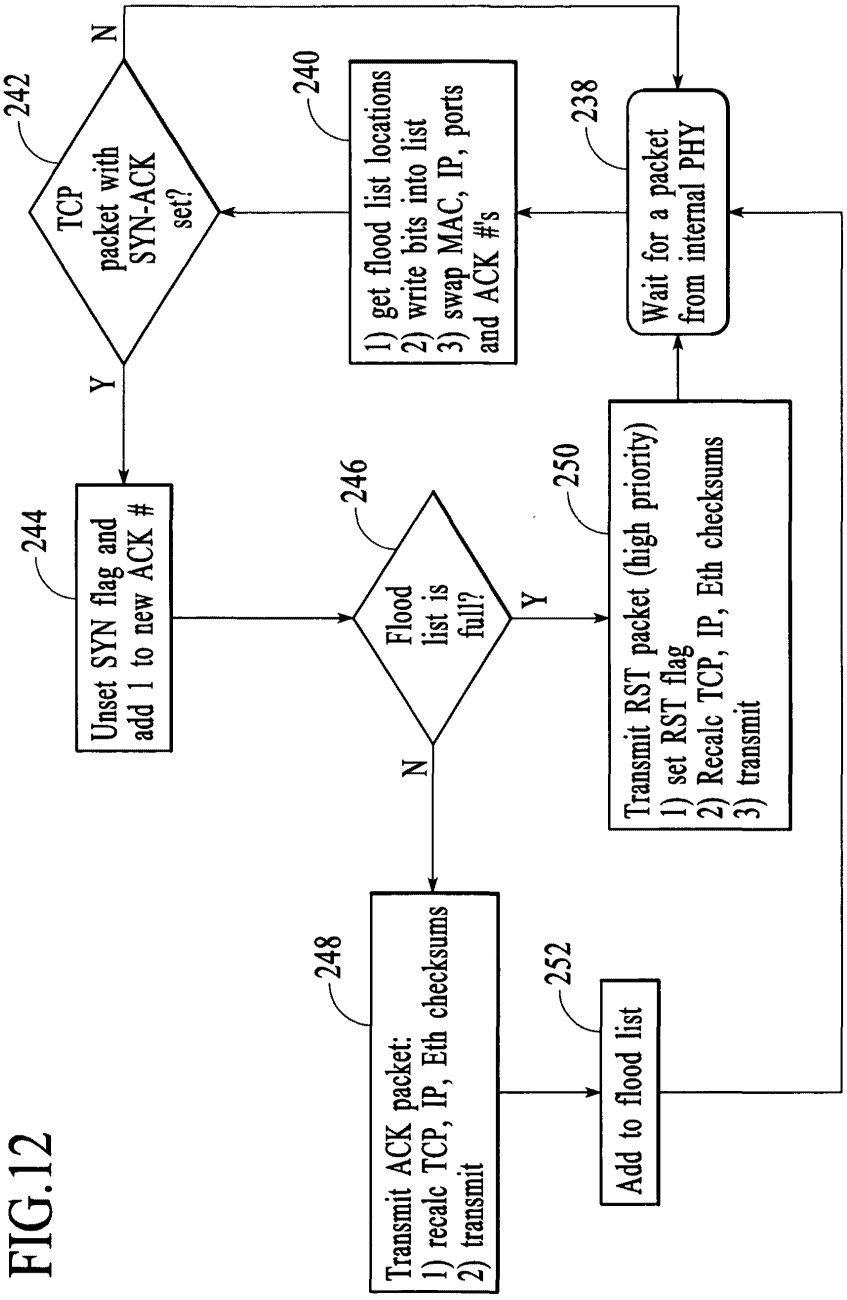
242
TCP packet with SYN-ACK set?
N
Y
240
1) get flood list locations
2) write bits into list
3) swap MAC, IP, ports and ACK #'s
238
Wait for a packet from internal PHY
244
Unset SYN flag and add 1 to new ACK #
246
Flood list is full?
Y
N
250
Transmit RST packet (high priority)
1) set RST flag
2) Recalc TCP, IP, Eth checksums
3) transmit
248
Transmit ACK packet:
1) recalc TCP, IP, Eth checksums
2) transmit
252
Add to flood list

FIG.12

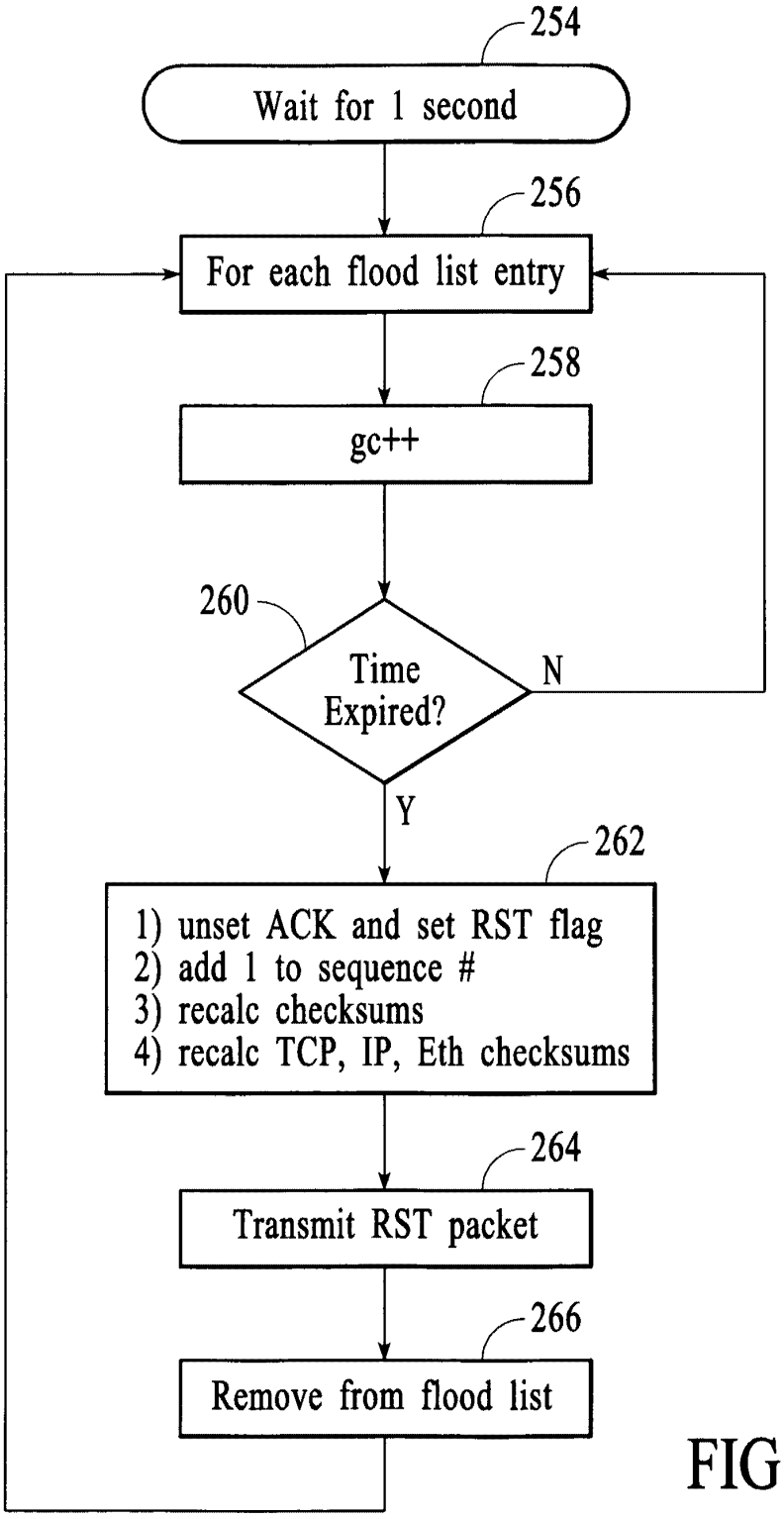
254
Wait for 1 second
256
For each flood list entry
258
gc++
260
Time Expired?
N
Y
262
1) unset ACK and set RST flag
2) add 1 to sequence #
3) recalc checksums
4) recalc TCP, IP, Eth checksums
264
Transmit RST packet
266
Remove from flood list

FIG.13

DocCode - SCORE

SCORE Placeholder Sheet for IFW Content

Application Number: **12807641** Document Date: **09/10/2010**

The presence of this form in the IFW record indicates that the following document type was received in paper and is scanned and stored in the SCORE database.

- Drawings

Images of the original documents are scanned in gray scale or color and stored in SCORE. Bi-tonal images are also stored in IFW. Defects visible in both IFW and SCORE are indicative of defects in the original paper documents.

To access the documents in the SCORE database, refer to instructions developed by SIRA.

At the time of document entry (noted above):

- Examiners may access SCORE content via the eDAN interface.
- Other USPTO employees can bookmark the current SCORE URL (http://es/ScoreAccessWeb/).
- External customers may access SCORE content via the Public and Private PAIR interfaces.

Form Revision Date: December 8, 2006

PTO/SB/06 (12-04)

Approved for use through 7/31/2006. OMB 0651-0032

U.S. Patent and Trademark Office; U.S. DEPARTMENT OF COMMERCE

Under the Paperwork Reduction Act of 1995, no persons are required to respond to a collection of information unless it displays a valid OMB control number.

Date: 09/10/10

PATENT APPLICATION FEE DETERMINATION RECORD

Substitute for Form PTO-875

Application or Docket Number: 12/807,641

APPLICATION AS FILED – PART I

FOR	(Column 1) NUMBER FILED	(Column 2) NUMBER EXTRA	SMALL ENTITY RATE ($)	SMALL ENTITY FEE ($)	OR	OTHER THAN SMALL ENTITY RATE ($)	OTHER THAN SMALL ENTITY FEE ($)
BASIC FEE (37 CFR 1.16(a), (b), or (c))	N/A	N/A	N/A	165		N/A	
SEARCH FEE (37 CFR 1.16(k), (i), or (m))	N/A	N/A	N/A	270		N/A	
EXAMINATION FEE (37 CFR 1.16(o), (p), or (q))	N/A	N/A	N/A	110		N/A	
TOTAL CLAIMS (37 CFR 1.16(i))	66 minus 20 =	46	x$26	1196	OR	x$52	
INDEPENDENT CLAIMS (37 CFR 1.16(h))	2 minus 3 =	*	x$110			x$220	
APPLICATION SIZE FEE (37 CFR 1.16(s))	If the specification and drawings exceed 100 sheets of paper, the application size fee due is $260 ($130 for small entity) for each additional 50 sheets or fraction thereof. See 35 U.S.C. 41(a)(1)(G) and 37 CFR						
MULTIPLE DEPENDENT CLAIM PRESENT (37 CFR 1.16(j))			195			390	
* If the difference in column 1 is less than zero, enter "0" in column 2.			TOTAL	1741		TOTAL	

APPLICATION AS AMENDED – PART II

		(Column 1) CLAIMS REMAINING AFTER AMENDMENT		(Column 2) HIGHEST NUMBER PREVIOUSLY PAID FOR	(Column 3) PRESENT EXTRA	SMALL ENTITY RATE ($)	SMALL ENTITY ADDITIONAL FEE ($)	OR	OTHER THAN SMALL ENTITY RATE ($)	OTHER THAN SMALL ENTITY ADDITIONAL FEE ($)
AMENDMENT A	Total (37 CFR 1.16(i))	*	Minus	**	=	x =		OR	x =	
	Independent (37 CFR 1.16(h))	*	Minus	***	=	x =		OR	x =	
	Application Size Fee (37 CFR 1.16(s))									
	FIRST PRESENTATION OF MULTIPLE DEPENDENT CLAIM (37 CFR 1.16(j))					N/A		OR	N/A	
						TOTAL ADD'T FEE		OR	TOTAL ADD'T FEE	

		(Column 1) CLAIMS REMAINING AFTER AMENDMENT		(Column 2) HIGHEST NUMBER PREVIOUSLY PAID FOR	(Column 3) PRESENT EXTRA	RATE ($)	ADDITIONAL FEE ($)	OR	RATE ($)	ADDITIONAL FEE ($)
AMENDMENT B	Total (37 CFR 1.16(i))	*	Minus	**	=	x =		OR	x =	
	Independent (37 CFR 1.16(h))	*	Minus	***	=	x =		OR	x =	
	Application Size Fee (37 CFR 1.16(s))									
	FIRST PRESENTATION OF MULTIPLE DEPENDENT CLAIM (37 CFR 1.16(j))					N/A		OR	N/A	
						TOTAL ADD'T FEE		OR	TOTAL ADD'T FEE	

* If the entry in column 1 is less than the entry in column 2, write "0" in column 3.

** If the "Highest Number Previously Paid For" IN THIS SPACE is less than 20, enter "20".

*** If the "Highest Number Previously Paid For" IN THIS SPACE is less than 3, enter "3".
The "Highest Number Previously Paid For" (Total or Independent) is the highest number found in the appropriate box in column 1.

This collection of information is required by 37 CFR 1.16. The information is required to obtain or retain a benefit by the public which is to file (and by the USPTO to process) an application. Confidentiality is governed by 35 U.S.C. 122 and 37 CFR 1.14. This collection is estimated to take 12 minutes to complete, including gathering, preparing, and submitting the completed application form to the USPTO. Time will vary depending upon the individual case. Any comments on the amount of time you require to complete this form and/or suggestions for reducing this burden, should be sent to the Chief Information Officer, U.S. Patent and Trademark Office, U.S. Department of Commerce, P.O. Box 1450, Alexandria, VA 22313-1450. DO NOT SEND FEES OR COMPLETED FORMS TO THIS ADDRESS. **SEND TO: Commissioner for Patents, P.O. Box 1450, Alexandria, VA 22313-1450.**

If you need assistance in completing the form, call 1-800-PTO-9199 and select option 2.