US007564433B2

(12) **United States Patent**
Hector et al.

(10) **Patent No.: US 7,564,433 B2**
(45) **Date of Patent: Jul. 21, 2009**

(54) **ACTIVE MATRIX DISPLAY DEVICES**

(75) Inventors: **Jason R. Hector**, Redhill (GB); **Mark J. Childs**, Wootton Bassett (GB); **David A. Fish**, Haywards Heath (GB); **Mark T. Johnson**, Veldhoven (NL)

(73) Assignee: **Koninklijke Philips Electronics N.V.**, Eindhoven (NL)

(*) Notice: Subject to any disclaimer, the term of this patent is extended or adjusted under 35 U.S.C. 154(b) by 362 days.

(21) Appl. No.: **10/542,903**

(22) PCT Filed: **Jan. 20, 2004**

(86) PCT No.: **PCT/IB2004/000156**

§ 371 (c)(1),
(2), (4) Date: **Jul. 20, 2005**

(87) PCT Pub. No.: **WO2004/066249**

PCT Pub. Date: **Aug. 5, 2004**

(65) **Prior Publication Data**

US 2006/0077134 A1 Apr. 13, 2006

(30) **Foreign Application Priority Data**

Jan. 24, 2003 (GB) 0301659.9
Apr. 11, 2003 (GB) 0308396.1

(51) **Int. Cl.**
G09G 3/32 (2006.01)
G09G 3/30 (2006.01)

(52) **U.S. Cl.** **345/82**; 345/76

(58) **Field of Classification Search** 345/76, 345/82, 83, 60–100; 315/169.3
See application file for complete search history.

(56) **References Cited**

U.S. PATENT DOCUMENTS

7,061,452	B2 *	6/2006	Inoue et al.	345/76
2002/0030647	A1 *	3/2002	Hack et al.	345/82
2002/0038998	A1 *	4/2002	Fujita et al.	313/495
2002/0054003	A1	5/2002	Kodate	

(Continued)

FOREIGN PATENT DOCUMENTS

EP	0717446	A1	6/1996

(Continued)

OTHER PUBLICATIONS

Joon- Chul Goh, et al: A New Pixel Circuit for Active Matrix Organic Light Emitting Diodes, IEEE, vol. 23, No. 9, Sep. 2002, pages.

(Continued)

Primary Examiner—Amare Mengistu
Assistant Examiner—Robert R Rainey

(57) **ABSTRACT**

An active matrix display device uses an amorphous silicon drive transistor for driving a current through an LED display element. First and second capacitors are connected in series between the gate and source of the drive transistor, with a data input to the pixel provided to the junction between the first and second capacitors. The second capacitor is charged to a pixel data voltage, and a drive transistor threshold voltage is stored on the first capacitor. This pixel arrangement enables a threshold voltage to be stored on the first capacitor, and this can be done each time the pixel is addressed, thereby compensating for age-related changes in the threshold voltage.

34 Claims, 10 Drawing Sheets

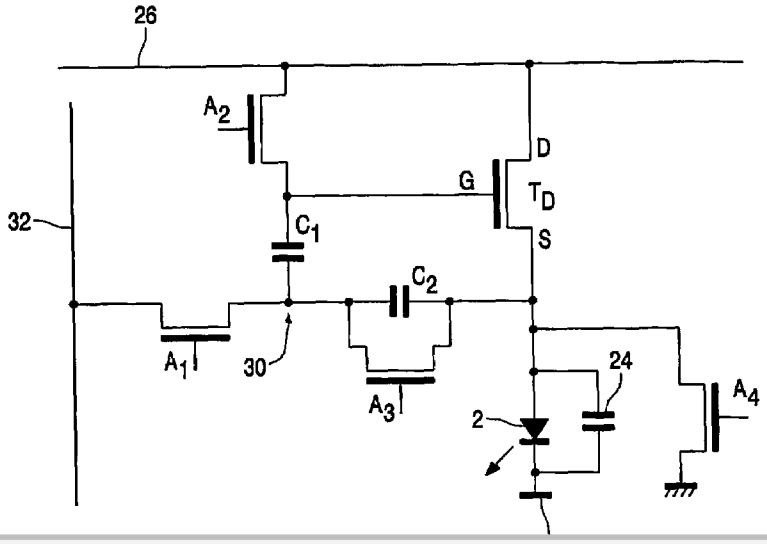

U.S. PATENT DOCUMENTS

2002/0089496	A1*	7/2002	Numao	345/204
2003/0052843	A1*	3/2003	Yamazaki et al.	345/82
2003/0098828	A1*	5/2003	Hunter et al.	345/76
2005/0104814	A1*	5/2005	Choi et al.	345/76
2005/0156829	A1*	7/2005	Choi et al.	345/76

FOREIGN PATENT DOCUMENTS

WO WO9636959 A1 11/1996

OTHER PUBLICATIONS

Yumoto A, et al: Pixel-Driving Methods for Large-Sized Poly-SI AM-OLED Displays, IDW, vol. Conf. 21/8, Oct. 2001, pp. 1395-1398.

Yi He, et al: Four-Thin Film Transistor Pixel Electrode Circuits for Active-Matrix Organic Light-Emitting Displays, vol. 40, No. 3A Part 1, Mar. 2001, pp. 1199-1208.

He Y, et al: Current_Source A-Si :H Thin-Film Transistor Circuit for Active-Matrix Organic Light-Emiting Displays, IEEE Inc, vol. 21, No. 12, Dec. 2000, pp. 590-592.

S. R. Forest, et al: Electrophosphorescent Organic Light Emitting Devices: 52.1 SID, May 2002, pp. 1357-1359.

J. P. J. Markham: Highly Efficient Solution Processible Dendrimer LED's, L-8 SID, May 2002, pp. 1032-1035.

* cited by examiner

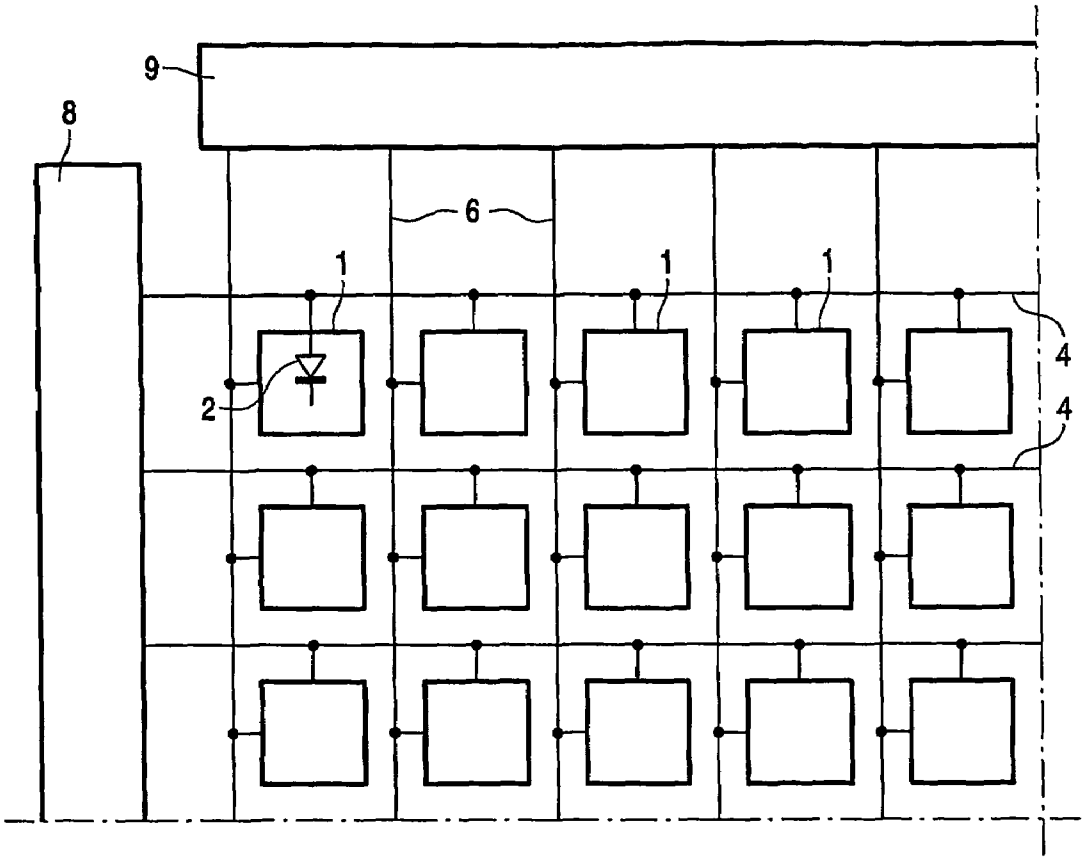

FIG.1 PRIOR ART

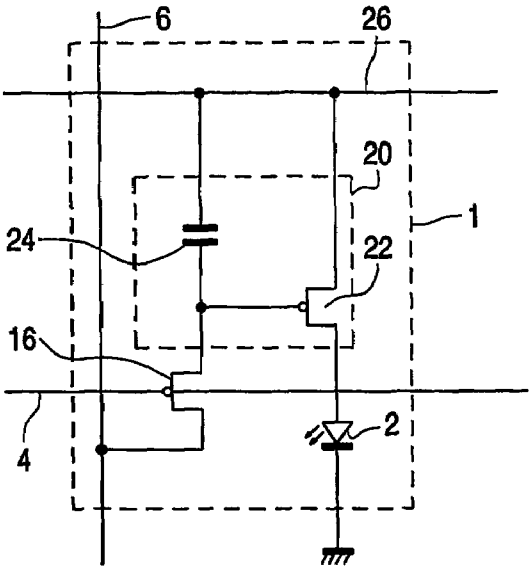

FIG.2 PRIOR ART

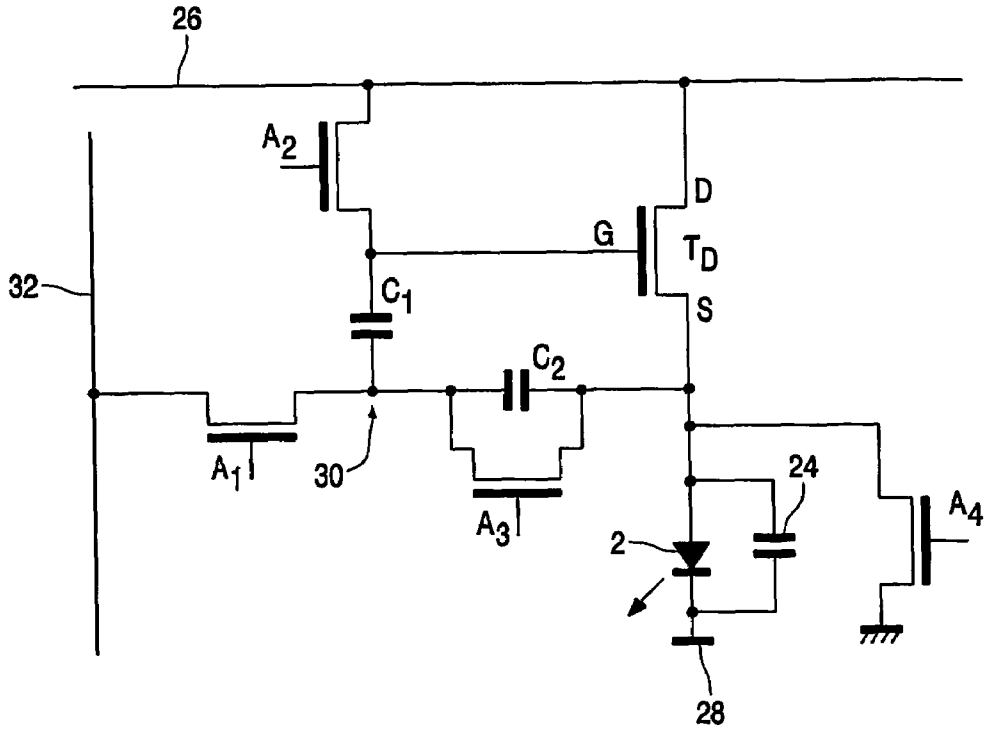

FIG.3

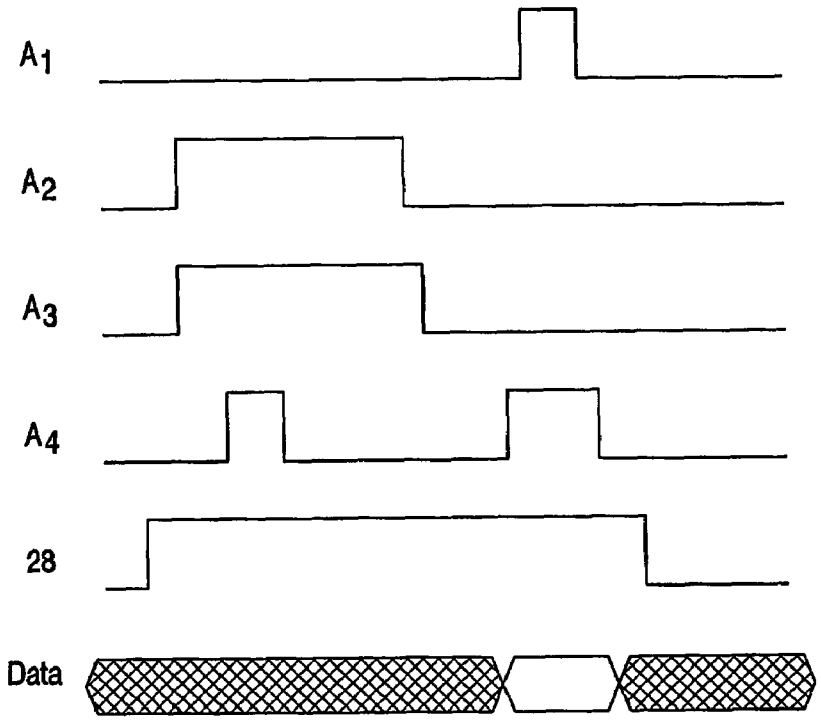

FIG.4

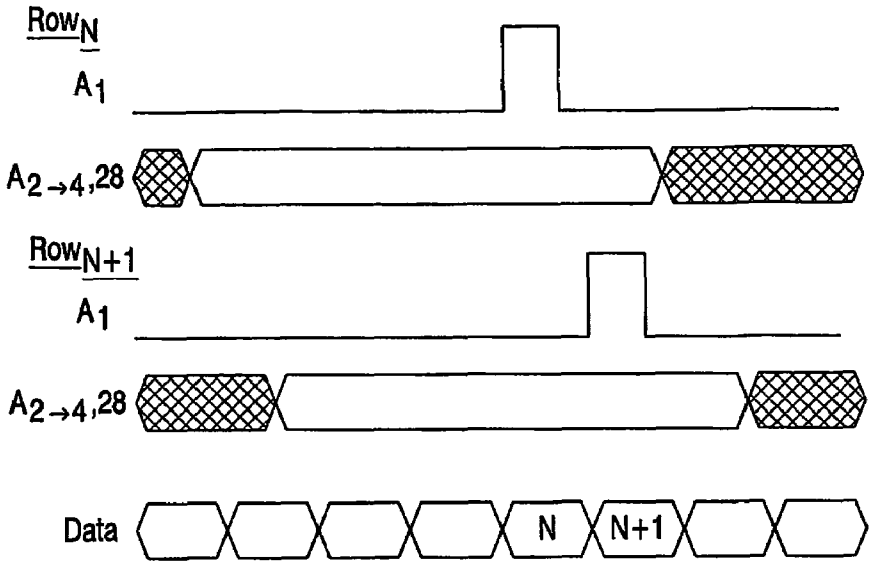

FIG.5

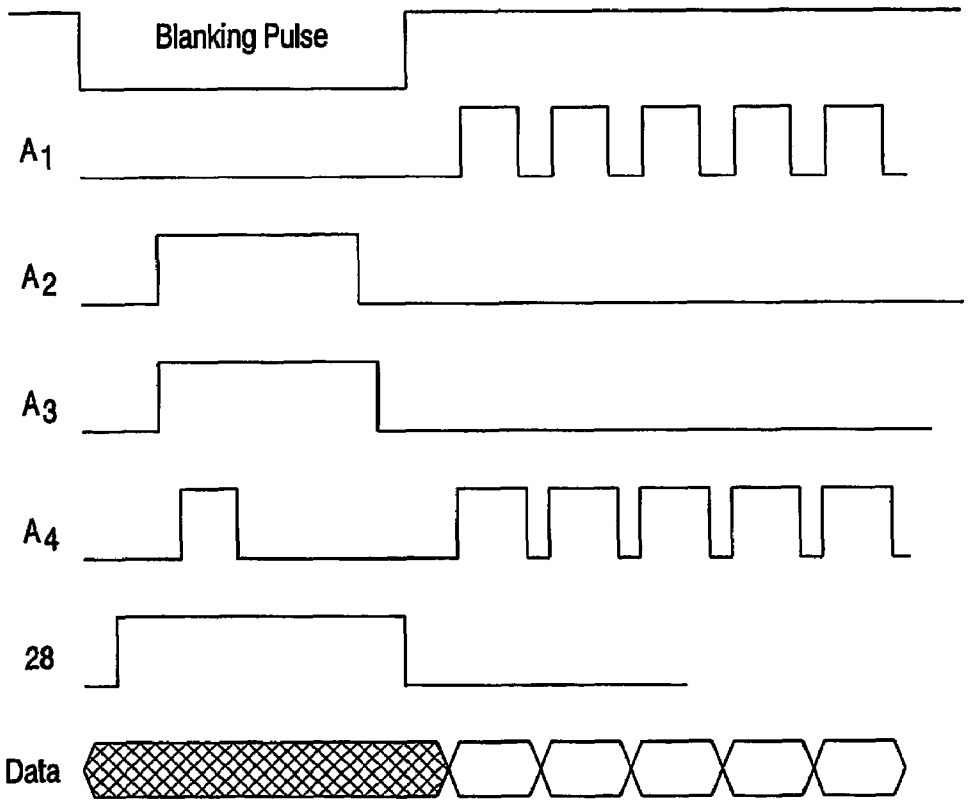

FIG.6

DOCKET ALARM

Explore Litigation Insights

Docket Alarm provides insights to develop a more informed litigation strategy and the peace of mind of knowing you're on top of things.

Real-Time Litigation Alerts

Keep your litigation team up-to-date with **real-time alerts** and advanced team management tools built for the enterprise, all while greatly reducing PACER spend.

Our comprehensive service means we can handle Federal, State, and Administrative courts across the country.

Advanced Docket Research

With over 230 million records, Docket Alarm's cloud-native docket research platform finds what other services can't. Coverage includes Federal, State, plus PTAB, TTAB, ITC and NLRB decisions, all in one place.

Identify arguments that have been successful in the past with full text, pinpoint searching. Link to case law cited within any court document via Fastcase.

Analytics At Your Fingertips

Learn what happened the last time a particular judge, opposing counsel or company faced cases similar to yours.

Advanced out-of-the-box PTAB and TTAB analytics are always at your fingertips.

API

Docket Alarm offers a powerful API (application programming interface) to developers that want to integrate case filings into their apps.

LAW FIRMS

Build custom dashboards for your attorneys and clients with live data direct from the court.

Automate many repetitive legal tasks like conflict checks, document management, and marketing.

FINANCIAL INSTITUTIONS

Litigation and bankruptcy checks for companies and debtors.

E-DISCOVERY AND LEGAL VENDORS

Sync your system to PACER to automate legal marketing.