02-02-01 A

02/01/01 Jc965 U.S. PTO

CERTIFICATE OF MAILING BY "EXPRESS MAIL" UNDER 37 CFR § 1.10

"Express Mail" mailing label number EJ058152044US

Date of Mailing 2-1-01

I hereby certify that the documents indicated below are being deposited with the United States Postal Service under 37 CFR 1 10 on the date indicated above and are addressed to Box Patent Application, Assistant Commissioner for Patents, Washington, D C 20231, and mailed on the above Date of Mailing with the above "Express Mail" mailing label number

Toni Stanley (Typed or printed name of person mailing paper or fee)

Toni Stanley SIGNATURE of person mailing paper or fee

J1033 U.S. PTO 09/775018 02/01/01

BOX PATENT APPLICATION
ASSISTANT COMMISSIONER FOR PATENTS
WASHINGTON, D. C. 20231

DOCKET NUMBER: 16312-P005US

Sir:

Transmitted herewith for filing is the Patent Application of:

Inventor: Eric G. Suder et al

For: QUALITY OF SERVICE IN A VOICE OVER IP TELEPHONE SYSTEM

Enclosed are:

- ☒ Patent Specification
- ☒ 13 sheets of drawing(s)
- ☐ An assignment of the invention to Estech Systems, Inc. (includes Recordation Form Cover Sheet).
- ☐ A certified copy of a __ application.
- ☐ An associate power of attorney
- ☒ Information Disclosure Statement, PTO 1449 and copies of references.
- ☒ Applicant claims small entity status (37 C.F R 1.27).
- ☒ Request Not to Publish (35 U.S.C. 122(b)(2)(B)(1)

The filing fee has been calculated as shown below:

For	Number Filed			Number Extra	Rate Small Entity	Fee Small Entity
Basic Fee						$ 355 00
Total Claims	77	-	20	57	x 9=	$ 513 00
Indep. Claims	5	-	3	2	x 40	$ 80 00
☐ MULTIPLE DEPENDENT CLAIM(S) PRESENTED					+ 135 =	$ - 0 -
					TOTAL	$ 948 00

- ☒ A check in the amount of $ 948.00 is enclosed for the filing fee.
- ☒ The Assistant Commissioner is hereby authorized to charge payment of the following fees associated with this communication or credit any overpayment to Deposit Account No 23-2426 (16312-P005US). **A duplicate copy of this sheet is enclosed.**
  - ☒ Any additional filing fees required under 37 CFR §1.16
  - ☒ Any patent application processing fees under 37 CFR §1 17.

Respectfully submitted,

By: _____

Kelly K. Kordzik
Registration No. 36,571
Winstead Sechrest & Minick P.C
100 Congress Avenue
Suite 800
Austin, Texas 78701
(512) 370-2851

::ODMA\PCDOCS\AUSTIN_1\157648\1
207:16312-P005US

PTO/SB/35 (11-00)
Approved for use through 10/31/2002 OMB 0651-0031
U S Patent and Trademark Office, U S. DEPARTMENT OF COMMERCE
Under the Paperwork Reduction Act of 1995, no persons are required to respond to a collection of information unless it displays a valid OMB control number

REQUEST AND CERTIFICATION UNDER 35 U.S.C. 122 (b)(2)(B)(i)	First Named Inventor	Eric G. Suder et al.
	Title	QUALITY OF SERVICE IN A VOICE OVER IP TELEPHONE SYSTEM
	Atty Docket Number	16312-P005US

I hereby certify that the invention disclosed in the attached application **has not and will not be** the subject of an application filed in another country, or under a multilateral agreement, that requires publication at eighteen months after filing. I hereby request that the attached application not be published under 35 U.S.C. 122(b).

2/1/01
Date

Signature

Kelly K Kordzik
Reg No 36,571

Typed or printed name

This request must be signed in compliance with 37 CFR 1.33(b) and submitted with the application **upon filing.**

Applicant may rescind this nonpublication request at any time. If applicant rescinds a request that an application not be published under 35 U.S.C. 122(b), the application will be scheduled for publication at eighteen months from the earliest claimed filing date for which a benefit is claimed.

If applicant subsequently files an application directed to the invention disclosed in the attached application in another country, or under a multilateral international agreement, that requires publication of applications eighteen months after filing, the applicant **must** notify the United States Patent and Trademark Office of such filing within forty-five (45) days after the date of the filing of such foreign or international application. **Failure to do so will result in abandonment of this application (35 U.S.C. 122(b)(2)(B)(iii)).**

Burden Hour Statement This collection of information is required by 37 CFR 1 213(a) The information is used by the public to requires that an application not be published under 35 U S C 122(b) (and the PTO to process that request) Confidentiality is governed by 35 U S C 122 and 37 CFR 1 14 This form is estimated to take 6 minutes to complete This time will vary depending upon the needs of the individual case Any comments on the amount of time you are required to complete this form should be sent to the Chief Information Officer, U.S Patent and Trademark Office, Washington, DC 20231 DO NOT SEND FEES OR COMPLETED FORMS TO THIS ADDRESS SEND TO. Assistant Commissioner for Patents, Washington, DC 20231

16312-P005US

QUALITY OF SERVICE IN A VOICE OVER IP TELEPHONE SYSTEM

TECHNICAL FIELD

The present invention relates in general to information processing systems, and in particular, to the use of Voice over IP technology to transmit voice conversations.

BACKGROUND INFORMATION

Voice over IP ("VoIP") is a relatively recent development that is utilized to transmit voice conversations over a data network using the Internet Protocol ("IP"). Internet Protocol is a part of the TCP/IP family of protocols described in software that tracks the Internet address of nodes, routes outgoing messages, and recognizes incoming messages. Such a data network may be the Internet or a corporate intranet, or any TCP/IP network. There are several potential benefits for moving voice over a data network using IP. First, there is a savings in money compared to the need to use traditional tolled telecommunications networks. Additionally, Voice over IP enables the management of voice and data over a single network. And, with the use of IP phones, moves, adds and changes are easier and less expensive to implement. Moreover, additional and integrated new services, including integrated messaging, bandwidth on demand, voice e-mails, the development of "voice portals" on the Web, simplified setting up and tearing down, and transferring of phone calls are capable.

Using Voice over IP technology, phone systems can communicate with each other over existing TCP/IP data networks typically present between remote offices.

CISCO EXHIBIT 1004
Page 3 of 345

This feature alone can eliminate the need for expensive, dedicated circuits between facilities. The shared bandwidth can also be used for voice calls and data communication simultaneously; no bandwidth is dedicated to one or the other.

Another advantage of a Voice over IP system is the ability to implement a phone system over an existing data network that is already connecting workstations within a local area network, such as over an Ethernet. An Ethernet operates over twisted wire and over coaxial cable for connecting computers, printers, workstations, terminals, servers, etc., within the same building or a campus. The Ethernet utilizes frame packets for transmitting information. Voice over IP can utilize such packet switching capabilities to connect IP phones onto the Ethernet. However, the implementation of Voice over IP onto an Ethernet has proven to have some difficulties. Data networks were originally designed to allow for latency (delays) in the delivery of packets between sources and destinations. If a packet became lost, then the Ethernet would go through a re-send protocol to have the packet sent again from the source to the destination, and the data then reassembled at the destination end. With voice (or for that matter, video or any other real-time application), such delays present problems. Real-time applications cannot tolerate significant delays or they no longer become real-time applications. Such quality of service ("QOS") concerns are especially amplified when attempting to implement Voice over IP onto an Ethernet, which utilizes a 10/100 Base T protocol, since it can be affected by bursts of data transfers among the workstations and servers, etc. For example, a large print job or a file access can significantly occupy the bandwidth on such an Ethernet, thus greatly degrading the ability to transmit any real-time information during that data

burst. This problem worsens as more and more Voice over IP telephones are added to the network.

Therefore, there is a need in the art for an improved information processing system that can handle multimedia traffic in conjunction with typical bursty data transmissions.

SUMMARY OF THE INVENTION

The present invention addresses the foregoing need by providing an information processing system whereby an IP telephony system is designed to share a network with data devices communicating with a network operating system. In one embodiment, the network is an Ethernet local area network. Because these systems share a common hardware media, there is a possibility to saturate the network. Multimedia traffic can be adversely affected by jitter and latency, while data traffic is typically immune to these types of disruptions. This bandwidth contention requires a suitable quality of service arrangement to give the multimedia traffic priority during peak traffic loads.

More specifically, an IP telephony device will contain two separate media access controllers ("MACs") configured to provide a two-port, layer 2 Ethernet switch. This approach permits one MAC to be connected to the network, while the other MAC is dedicated to a connected network device. This allows all traffic flowing between MACs to be manipulated by a hardware/software approach within the IP telephony device. The quality of service algorithm of the present invention uses this configuration to restrict data traffic to/from the network device during peak traffic conditions, thus providing increased multimedia traffic bandwidth when needed.

In one embodiment of the present invention, voice jitter buffers within each IP telephony device are used to minimize the effects of jitter and latency by providing a buffer of three voice packets. If the bandwidth usage of the Ethernet link becomes too great, the jitter buffer will start to deplete. The IP telephony device will detect this

CISCO EXHIBIT 1004
Page 6 of 345

condition and report it to a quality of service task running within a multimedia server coupled to the Ethernet.

If any of the IP telephony devices report to the multimedia server that their jitter buffers have hit a specified threshold, the multimedia server will issue a command to all (or selected) IP telephony devices simultaneously to begin a flow control process between their respective network devices and the network. If, after a programmable interval, the multimedia server ceases receiving quality of service messages from the IP telephony devices, the multimedia server will issue a command to stop the flow control process.

In an embodiment of the present invention, the command that the multimedia server issues to instruct the IP telephony devices to start the flow control process will contain a parameter used to signify how aggressively the IP telephony devices should flow control their respective data paths. For example, the multimedia server would first send the most aggressive value. Once the quality of service messages cease from the IP telephony devices, the multimedia server would then send a next lower aggressive parameter value. If no quality of service messages are received, the multimedia server will turn off the quality of service algorithm. If, however, during any stage if the quality of service messages are received from the IP telephony devices, the multimedia server will reissue the next higher flow control value.

In one embodiment of the present invention, during the quality of service flow control processes, the IP telephony devices may flood the private network between the IP telephony devices and the network devices with idle patterns (jabber). The various levels of flow control needed could be achieved by a jabber duty cycle. For example, a most aggressive value may have an eighty percent duty cycle, while a least

CISCO EXHIBIT 1004
Page 7 of 345

aggressive value may have a twenty percent duty cycle. During the jabber process, communication between the network device and server is disrupted, allowing more bandwidth for the voice packets between the IP telephony devices and the multimedia server.

The foregoing has outlined rather broadly the features and technical advantages of the present invention in order that the detailed description of the invention that follows may be better understood. Additional features and advantages of the invention will be described hereinafter which form the subject of the claims of the invention.

CISCO EXHIBIT 1004
Page 8 of 345

BRIEF DESCRIPTION OF THE DRAWINGS

For a more complete understanding of the present invention, and the advantages thereof, reference is now made to the following descriptions taken in conjunction with the accompanying drawings, in which:

FIGURE 1 illustrates an information processing system configured in accordance with the present invention;

FIGURE 2 illustrates a wide area network configuration of the present invention;

FIGURE 3 illustrates another embodiment of a wide area network configuration of the present invention;

FIGURE 4 illustrates a block diagram of a configuration of the present invention;

FIGURE 5 illustrates a block diagram of a network card configured in accordance with the present invention;

FIGURE 6 illustrates a block diagram of the main board of the present invention;

FIGURE 7 illustrates a block diagram of a peripheral card configured in accordance with the present invention;

FIGURE 8 illustrates a block diagram of a telephony device configured in accordance with the present invention;

FIGURE 9 illustrates a flow diagram of a station-to-station telephone call;

FIGURES 10, 11, 12A and 12B illustrate flow diagrams configured in accordance with the present invention; and

CISCO EXHIBIT 1004
Page 9 of 345

FIGURE 13 illustrates functions implemented in the processing means of the main board.

DETAILED DESCRIPTION

In the following description, numerous specific details are set forth such as specific network configurations, network devices, types of multimedia traffic, etc. to provide a thorough understanding of the present invention. However, it will be obvious to those skilled in the art that the present invention may be practiced without such specific details. In other instances, well-known circuits have been shown in block diagram form in order not to obscure the present invention in unnecessary detail. For the most part, details concerning timing considerations and the like have been omitted in as much as such details are not necessary to obtain a complete understanding of the present invention and are within the skills of persons of ordinary skill in the relevant art.

Refer now to the drawings wherein depicted elements are not necessarily shown to scale and wherein like or similar elements are designated by the same reference numeral through the several views.

FIGURE 1 illustrates an information processing system configured in accordance with the present invention. FIGURE 1 essentially illustrates a local area network ("LAN"), which in one configuration could be implemented with an Ethernet protocol. However, the present invention is not limited to use with any particular data transfer protocol. Workstation PC 106, network hub 103 and server 104 coupled to each other illustrate a typical LAN configuration where data is communicated between the workstation 106 and the server 104. Naturally, other workstations and servers could also be coupled to the LAN through hub 103, including the use of additional hubs. Hub 103 may be a 10 Base T or 10/100 Base T Ethernet hub. In an

CISCO EXHIBIT 1004
Page 11 of 345

alternative embodiment, the hub 103 and server 104 may be implemented in the same data processing system. Herein, the term "workstation" can refer to any network device that can either receive data from a network, transmit data to a network, or both.

To add in the voice communication capabilities, an IP multimedia server 101 is coupled to hub 103 and an IP telephony device 105 is connected between the workstation 106 and the hub 103. The IP multimedia server 101 is coupled to a central office ("CO") 102 so that telephony device 105 can communicate to other telecommunications networks, such as the public switched telephone network ("PSTN"). Naturally, additional IP telephony device 105 can be coupled to hub 103, including having workstations coupled to hub 103 through such IP telephony devices. Further details on multimedia server 101 and IP telephony device 105 are described below. An IP telephone, or telephony device, is any apparatus, device, system, etc., that can communicate multimedia traffic using IP telephony technology. IP telephony is defined within Newton's Telecom Dictionary, Harry Newton, Sixteenth Edition, page 454, which is hereby incorporated by reference herein.

Information, or data, on the network includes both the voice and data information, and any other multimedia traffic. Traffic as a result of the data transmissions between workstation 106 and server 104 affects the bandwidth available for communications between telephony device 105 and multimedia server 101. However, as discussed above, because the multimedia traffic is real-time, it must be transferred with no or minimum latency. An embodiment of the present invention provides a protocol for ensuring that the multimedia data is transferred within a specified minimum or no latency by having the data information pass through the IP telephony device 105 as it is being transferred to/from workstation 106.

CISCO EXHIBIT 1004
Page 12 of 345

This configuration, as will be subsequently discussed in further detail, permits the IP telephony device 105 to throttle the data to/from workstation 106, effectively giving the IP telephony device 105 priority on the network.

FIGURE 2 illustrates how the information processing system of the present invention as noted above with respect to FIGURE 1 can be implemented across a wide area network ("WAN") 201 where the multimedia server 101 of FIGURE 1 is coupled to another multimedia server 202 across LAN 201. Note that the other items described above in FIGURE 1 have been omitted in FIGURE 2 for the sake of simplicity.

FIGURE 3 illustrates further detail of a configuration of the present invention over a WAN 201. Note that such a WAN may implement the TCP/IP protocol, and could be a public WAN, such as the Internet, a private data network, an intranet, or a Virtual Private Network ("VPN").

FIGURE 3 illustrates an exemplary system where WAN 201 couples an information processing system 301 in Dallas, Texas to another information processing system 302 in Detroit, Michigan, while also permitting a remote system 303 to couple to both systems 301 and 302 through WAN 201, such as from a telecommuter's home.

System 301 is similar to the system described above with respect to FIGURE 1. System 301 is coupled to WAN 201 through router 304.

System 302 is similar to system 301 with the exception that a data server is not implemented within system 302. Router 305 is similar to router 304, multimedia server 306 is similar to multimedia server 101, hub 307 is similar to hub 103, IP telephony device 308 is similar to IP telephony device 105, and workstation 309 is similar to workstation 106.

CISCO EXHIBIT 1004
Page 13 of 345

Remote system 303 is coupled to WAN 201 using a modem 310, such as an ADSL (asymmetric digital subscriber line) modem. A NAT (Network Address Translation) router/hub 311 then couples a workstation PC 312 and an IP telephony device 313 to the modem 310. Not only can data be transferred across WAN 201 between systems 301-303, but also any one of telephony devices 105, 308 and 313 can communicate with each other and with the PSTN (not shown) over CO lines coupled to either of systems 301 and 302.

FIGURE 4 illustrates further details of system 301. As noted above, system 301 is coupled to WAN 201 through IP router 304, which is coupled by line 413 to Ethernet hub 103. Ethernet hub 103 is connected by line 414 to fast Ethernet telephony device 105, which is coupled by line 415 to workstation 106. Ethernet hub 103 is coupled to IP network card 402 by connection 416, which may be a 10/100 Base T connector.

Multimedia server 101 is comprised of main board 401, network card 402, hard drive 403, backplane 404 and peripheral cards 405. network card 402 is further discussed below in more detail with respect to FIGURE 5. network card 402 is coupled by ribbon cable 409 to main board 401, which is further described below in more detail with respect to FIGURE 6. multimedia server 101 is powered through power pack 407. IDE (Integrated Drive Electronics) HDD (hard disk drive) 403 is coupled by ribbon cable 410 to network card 402 and main board 401, while network card 402 is coupled to backplane 404 through ribbon cable 411. Backplane 404 provides capacity for several peripheral cards (P-cards) 405, which are of a typical configuration for enabling a telephone system to connect to a central office (CO), T1

CISCO EXHIBIT 1004
Page 14 of 345

lines, analog central office trunks and analog telephones 406. Alternatively, ribbon cable 411 could be coupled to one of the peripheral cards 405 directly.

Referring next to FIGURE 5, there is illustrated a block diagram of network card 402. Network card 402 is responsible for communicating with all IP telephones, remote telephones and remote sites via a 10/100 Base T connection. The higher-level communication protocol used may be a standard UDP/IP (User Datagram Protocol/Internet Protocol) protocol. In addition, network card 402 communicates with the main board 401 for overall system control. Network card 402 has effectively replaced individual electronic key telephone circuits with a single Ethernet interface, and network card 402 now acts as the central distribution point for all peripheral cards 405, which can plug into backplane 404.

Ribbon cable 410 from hard drive 403 is received at I/O 501 coupled to bus 502. Bus 502 is coupled to ECP (Enhanced Call Processing) microcontroller 503, DRAM 504, DSPs 505 and 506, DSP farm expansion connector 507, digital cross-point switch 509, and I/O and buffers 512. ECP 503 is a microcontroller responsible for overall communications between network card 402 and main board 401. ECP 503 directly interfaces the DSPs 505, 506 via the host port interface. The host port interface is a parallel (8 bit) interface between the DSPs and the host processor. This interface can be used to directly manipulate the DSP memory by a host processor. I/O 501 is a mailbox type parallel communication channel, which is multiplexed between communication with the IDE disk drive 403 and I/O 501 allowing direct control for functions such as firmware download and message passing. ECP 503 is based on a 16-bit Hitachi H8 family processor with built-in flash memory.

CISCO EXHIBIT 1004
Page 15 of 345

DSPs 505 and 506 can be implemented using Texas Instrument 5410 DSPs that perform packet encoding/decoding, jitter buffer management and UDP/IP protocol stacked functions. DSPs 505, 506 are connected to an external SRAM 511 and ASIC (FPGA) 513 that performs a PCI bridge function between bus 508 and bus 514, which is coupled to connectors 517 and 416 via 10/100 MAC/PHY devices 515 and 516. DSPs 505, 506 communicate with peripherals 405 via bus 502. DSP firmware is downloaded via the host port interface 501. I/O 501 allows communication with the main board 401 and the hard drive 403. Additionally, EPC 503 can directly control a daughter card containing additional DSPs through expansion connector 507 for functions such as speech compression.

Digital cross-point switch 509 is used to connect system voice conversations as needed between peripherals. Main board 401 houses the master cross-points with 616 discussed below with respect to FIGURE 6. The peripheral cards 405 share a pool of 160 time slots. Cross-point switch 509 is primarily responsible for connecting the packet-switched voice connections of the IP telephones or remote systems to the circuit switchboard. The FPGA/PCI bridge 513 performs the functions required to connect the 10/100 Base T Ethernet MAC/PHY devices 515, 516. Since devices 515, 516 are designed to communicate via a standard PCI bus 514, the FPGA 513 implements a minimal PCI bus implementation. In addition, the FPGA 513 implements I/O latches and buffers as required.

The 10/100 Base T devices 515, 516 are stand-alone Ethernet devices, which perform the media access control ("MAC") and the PHYsical layer functions in a single, low-cost chip. Devices 515, 516 communicate to the host processor via a standard PCI bus 514, and communicate to the network via a pulse transformer

CISCO EXHIBIT 1004
Page 16 of 345

coupled RJ-45 connection 517, 416. These devices contain FIFOs to minimize lost packets during traffic peaks. Per the PCI bus mastering specification, devices 515, 516 take control of the DSP bus and DMA data directly to SRAM 511. Conversely, the DSP 505, 506 writes data to be sent into the SRAM 511 and the devices 515, 516 DMA data via the PCI bus 514 to the network (LAN).

Referring next to FIGURE 6, there is illustrated, in block diagram form, main board 401 for integrating call processing and voice processing using a single processing means, which in this example is one microprocessor 601. Microprocessor 601, which may be a Motorola 68000 class microprocessor, communicates with hard disk 607 using driver circuitry 602. Hard disk 607 stores program data, voice prompts, voice mail messages, and all other types of speech used within main board 401.

Microprocessor 601 also includes watchdog timer 603 and real-time clock source 604.

Microprocessor 601 is coupled via bus 608 to flash memory 605 and dynamic random access memory ("DRAM") 606. Flash memory 605 is used to store bootstrap data for use during power up of main board 401. DRAM 606 stores the program accessed by microprocessor 601 during operation of main board 401.

Bus 608 also couples microprocessor 601 to signal processing circuitry, which in this example is digital signal processor ("DSP") 615. Digital signal processor 615 implements a number of functions traditionally implemented by discrete analog components.

Referring next to FIGURE 13, there are illustrated some of the primary functions implemented in DSP 615. DTMF receivers 1301 are implemented using

CISCO EXHIBIT 1004
Page 17 of 345

frequency domain filtering techniques. DTMF receivers 1301 detect all 16 standard DTMF (touch-tone) digits.

Automatic gain control ("AGC") 1302 is a closed-loop gain control system which normalizes received audio levels during recording.

Recording buffers 1303, which are coupled to AGC 1302, receive and store speech samples after they have passed through AGC block 1302. These speech samples are converted to μ-law PCM (Pulse Code Modulation) and double buffered (several samples per buffer). Microprocessor 601 copies the record data out of DSP buffers 1303 into RAM buffers (not shown), which are located in the microprocessor 601 data RAM area.

Fax tone detector 1304 is implemented using frequency domain filtering techniques. Fax tone detector 1304 detects the standard 1100 Hz FAX CNG tone (also referred to as the Calling Tone).

Caller ID modems 1305 are 1200 baud FSK modems similar to Bell 202-type modems. Caller ID modems 1305 are implemented as a frequency discriminator where a time delayed (quadrature) signal is multiplied by the original signal, low pass filtered, then sliced, which produce the square wave caller ID data stream.

Call processing tone generators 1307 are free running oscillators which generate the appropriate tones (and tone pairs) which make up the industry standard call processing tones. These tones include:

- dial tone
- busy/reorder tone
- ring back tone
- single frequency (440 Hz) tone

CISCO EXHIBIT 1004
Page 18 of 345

- DTMF dialer tones

Play buffers 1308 replay data from hard disk 607 through microprocessor 601 and place this play data in buffers 1308. This data is converted from an 8-bit μ-law PCM signal to 14-bit linear data.

Conference bridges 1306 allow multiple conference bridges to mix together conferees into a multi-party conference. These conferees may be a mixture of inside and outside parties. A combination of "loudest speaker" and "summing" is utilized.

DSP 615 communicates with microprocessor 601 via a host interface port ("HIP") via bus 608. The HIP link supports a command-based protocol, which is used to directly read or write DSP memory locations. DSP 615 is a RAM-based part and has its program downloaded from microprocessor 601. Once downloaded and running, microprocessor 601 (the host) polls for events or receives interrupts indicating that data is available. DSP 615 speech connections are made over an industry standard 32-time slot, 2.048 megabits per second (Mb/s) digital serial link 618. Link 618 occupies one of the digital highways implemented by digital cross-point matrix 616. Each service of DSP 615 occupies a single time slot. For example, DTMF receiver 1 occupies time slot 0 while conference bridge circuit 12 occupies time slot 31.

Digital cross-point matrix 616 is also coupled to bus 608 and operates to connect any voice path to any other voice path. Digital cross-point matrix 616 is a VLSI (Very Large Scale Integration) integrated circuit. An example of digital cross-point matrix 616 is manufactured by MITEL Semiconductor Corporation as part No. 8980. Digital cross-point matrix 616 communicates with microprocessor 601 via a memory mapped input/output (I/O) scheme. A command/control protocol is used

CISCO EXHIBIT 1004
Page 19 of 345

for communication between microprocessor 601 and digital cross-point matrix 616 via bus 608. Cross-point matrix 616 is coupled by highway 618 to DSP 615. Cross-point matrix 616 is coupled to highway 617.

Digital cross-point matrix 616 is capable of making 256 simultaneous fully non-blocking connections. However, it may be upgraded by adding additional DSPs and/or cross-point matrices.

Gate array 612 is an SRAM (Static Random Access Memory) based device. An example of gate array 612 is manufactured by XILINX. Gate array 612 is responsible for generating all system timing. A master clock signal is provided by microprocessor 601 at 16.384 MHz. This clock signal is divided down to provide a number of phase coherent system clocks such as 4.096 MHz, 2.048 MHz and 8 KHz (frame sync). In addition, a 5-bit time slot counter is implemented which allows all the system CODECs to detect the appropriate time slot to use (0-31). An additional divider chain is included to divide the system clock down to 20 Hz, which is used by the ringing generator power supply (not shown).

Gate array 612 is downloaded at boot-up by system software. Gate array 612 is based on an SRAM architecture. That is, the internal fusible links commonly found in programmable logic are actually stored in volatile SRAM. Because of this architecture, gate array 612 is downloaded after power-up. Also, note the added flexibility of being able to modify the logic by simply loading new system software. Because the device is SRAM-based, it loses its programming when power is removed.

Bus 608 is also coupled to modem 610, which provides a capability of calling into system 401 on a remote basis to load additional programs, voice prompts, etc., or updates thereto, into hard disk 607. Modem 610 is coupled to coder/decoder

CISCO EXHIBIT 1004
Page 20 of 345

("CODEC") 611, which is coupled to highway 617. This connection allows coupling of modem 610 through cross-point matrix 616 to CO lines through bus 409 to the p-cards described with respect to FIGURE 5.

Also coupled to highway 617 is dual subscriber line access chip (DSLAC) 619, which is well-known in the art, and which is coupled to analog ports 620 and 621, which provide an ability for system 401 to communicate to analog-type connections such as cordless telephones and fax machines.

Highway 617 is also coupled to CODEC 622, which is coupled to transformer 623 to a music source, which provides an ability to couple an external music source to a caller through cross-point matrix 616 for such things as providing the caller with music on hold.

Power to system 401 is provided through switching power supply 407, which converts AC to the various DC supply voltages needed by circuitry within system 401.

Referring next to FIGURE 7, there is illustrated peripheral-card ("p-card") 405, which is coupled to main board 401. Main board 401 communicates with p-card 405 via system speech/control highways 411. This connection 411 is made to microcontroller 701 via digital crosspoint switch 705. P-card 405 provides interconnections between CO lines and analog phone lines to network card 402.

Microcontroller 701 controls all the real-time functions associated with p-card 405. When p-card 405 is plugged into backplane 404, a card address is assigned to p-card 405. This card address is read by microcontroller 701 and is used to filter commands over communication link 411. When network card software wants to communicate with the specific p-card 405, the address is sent in the message

CISCO EXHIBIT 1004
Page 21 of 345

packet which all p-cards 405 receive. P-cards 405 match the address in the message to the hard-wired address on the ribbon cable 411. If a match is made, only that p-card 405 responds to the command set.

Microcontroller 701 contains an internal program memory (not shown) and is connected to an external DRAM 703. The internal program memory contains a bootstrap program which upon reset or power-up, requests a fresh firmware load from network card 402. This firmware load is transferred to DRAM 703. Upon download completion, the program is run from within DRAM 703. This scheme allows for microcontroller 701 firmware to be updated and loaded at any time.

Network card 402 sources all system timing through buffers 704. Timing signals to p-card 405 consists of a 2.048 MHz clock signal, an 8 KHz frame sync, which signifies the first time slot of a 32 time slot highway, and 5 time slot counter bits, which represent a binary count from 0 to 31.

As mentioned above, p-card 405 is assigned a card slot address when it is connected to network card 402. This card slot address is used to calculate which time slots p-card 405 should be using. The time slots used for the CO codecs 706 and analog phone codecs 707 are generated by buffers 704.

The loop start central office (CO) lines are supplied by the local telephone company and consist of a wet balanced differential audio pair. The term "wet" refers to the fact that a voltage of -48 volts is present on the pair. The system requests dial tone from the CO by providing a nominal 200 ohm loop across the TIP and RING conductors and releases the connection by opening the loop. The CO rings the system by placing a 90 vrms AC, 20 Hz sine wave on the TIP and RING conductors. The system seizes the line by going off hook.

CISCO EXHIBIT 1004
Page 22 of 345

Interfaces 708 incorporate a circuit that monitors the voltage present across TIP and RING of each CO. This line voltage monitor circuit serves to detect the ring voltage present during ringing (ring detection) and the unique feature of monitoring the CO line status for conditions such as whether the CO is plugged in or if someone is off hook in front of the system. The latter can be used to detect theft of service or allow a credit card verification terminal to be used without interfering with normal system operation.

The voltage monitor circuit consists of a balanced differential op-amp connected across TIP and RING of the CO lines through a very high impedance (>10M ohms). The output of the four voltage monitor op-amps are fed to an analog-to-digital converter with a built-in analog multiplexer (not shown). Microcontroller 701 firmware monitors the line voltages.

There is also a balanced differential AC coupled op amp across the CO TIP and RING to monitor the low level audio tones present during caller ID. The output of these op-amps are selected via an analog switch during the idle period and are connected to the CO line codec 706.

To correctly terminate the CO line (seizure) care must be taken to satisfy the DC loop requirements (~200 ohms) and the AC impedance requirements (~600 ohms). The classic approach has been to terminate TIP and RING with an inductor (called a holding coil) which has a large inductance (>1 Hy) and a DC resistance of ~200 ohms. The inductor separates the AC and DC components to give the desired effect. The problem is that the inductor must be large enough not to saturate with currents as high as 100 milliamps. An inductor which satisfies these requirements is physically cumbersome.

CISCO EXHIBIT 1004
Page 23 of 345

P-card 405 incorporates a solid state inductor circuit called a gyrator (not shown) to implement the holding coil function. This single transistor emulates an inductor with the above requirements while taking up very little PCB space.

A small solid state relay (not shown) is used as the hook switch. When energized, the gyrator holding coil is placed across TIP and RING closing the loop. The audio present on TIP and RING is AC coupled to a small dry transformer. The secondary of this transformer is connected to the AC termination impedance and to the codec 708, which may be implemented on a dual subscriber line access chip ("DSLAC").

High voltage protection is provided for all paths on the TIP and RING connections. These paths include TIP to RING, TIP to GROUND, RING to GROUND, and TIP and RING to GROUND. This high voltage protection is accomplished by first passing the TIP and RING conductors through positive temperature coefficient varistors (not shown). These varistors act as resettable fuses. When excessive current flows through these varistors, they become resistive thus limiting the current flow. When the excessive current is stopped, the original resistance is restored.

Referring to FIGURE 8, there is illustrated a block diagram of further detail of IP telephony device 105. IP telephony device 105 may be a DSP based telephone instrument. Telephony device 105 communicates with the multimedia server 101 via the UDP/IP Protocol. PHYsical connection to the LAN is via an Ethernet 10/100 Base T interface. IP telephony device 105 contains the ability to perform layer-2 switching between two Ethernet ports in the telephony device for total control over voice versus data quality of service in accordance with the present invention. Speech

CISCO EXHIBIT 1004
Page 24 of 345

samples are digitized, stored in 16 millisecond long packets and transmitted to the multimedia server 101 via the UDP/IP Protocol. As packets are received, they are triple-buffered to compensate for jitter before playback.

Connection 415 from workstation 106 is received by Ethernet RJ-45 connector 815, which is coupled to MAC/PHY device 813. Connection 414 between hub 103 and telephony device 105 is connected to RJ-45 connector 816 which is coupled to MAC/PHY device 814. Devices 813 and 814 are coupled by PCI bus 812 to FPGA/PCI bridge 802.

DSP 801 may be a Texas Instruments Model 5402 DSP; DSP 801 can be the only processor implemented within telephony device 105. DSP 801 performs typical DSP audio algorithms such as tone generation, gain, speaker phone algorithms, and energy detection. In addition, DSP 801 acts as a standard control processor performing such tasks as scanning the keyboard 807, lighting LED lamps 808, displaying LCD messages on LCD 810, performing UDP/IP stack functions, and communicating with devices 813, 814 via the PCI bus 812. Note that DSP 801 communicates with keyboard 807, LEDs 808, LCD display 810, and peripheral connection 811 by I/O device 809 in a typical manner. Peripheral connection 811 permits a coupling of DSP 801 to a DSS console. A DSS console is a stand-alone device, which connects to the IP telephony device 105 to provide 64 individual LED lamps and keys. The lamps can be programmed by the user to monitor the status of individual stations, trunks or features. Pressing the key will access the associated function. Each telephony device in the system can connect to a DSS console. The DSS console communicates with the IP telephony device 105 via a 9600 baud serial communication link. The IP telephony device 105 does not contain a serial UART

CISCO EXHIBIT 1004
Page 25 of 345

device, so the serial data protocol is controlled by software running in DSP 801. Physical connection between the telephony device and DSS console may be via a standard two pair modular line cord.

DSP 801 is coupled to an external FLASH memory 803 and a fast SRAM 804, and FPGA 802 via buses 805 and 806.

CODEC 817 and CODEC 819 perform analog to digital and digital to analog conversion of speech signals. CODEC 817 is connected to the handsets, speaker and microphone elements (not shown) via connector 818, while CODEC 819 is connected to the hands-free speaker 821 through amplifier 820, and to the hands-free microphone 822. Separating the functionality in this way permits the IP telephony device 105 to send tones or voice to one speaker while allowing a normal conversation over the other.

FPGA/PCI bridge 802 performs the functions required to connect telephone 105 to the 10/100 Base T Ethernet devices 813, 814. Since devices 813, 814 are designed to communicate via a standard PCI bus 812, the FPGA 802 implements a minimal PCI bus implementation. In addition, the FPGA 802 implements I/O latches and buffers as required.

Devices 813, 814 perform the Media Access Control and the PHYsical layer functions. Devices 813, 814 communicate to DSP 801 via a standard PCI bus 812, and communicate to the LAN via post-transformer coupled RJ-45 connections 815, 816. Devices 813, 814 can contain FIFOs to minimize lost packets during traffic peaks. Per the PCI bus mastering specification, devices 813, 814 take control of the buses 805, 806 and direct memory access (DMA) data directly to SRAM 804.

CISCO EXHIBIT 1004
Page 26 of 345

Conversely, DSP 801 writes data to be sent into the SRAM 804 and the devices 813, 814 DMA the data via the PCI bus 812 to the LAN.

Referring to FIGURE 9, there is illustrated a station-to-station call to a remote cite. In step 901, a user 105 in Dallas 301 lifts the handset to place an intercom call to user 308 in Detroit 302. In step 902, user 105 dials an access code associated with site 302. These codes are currently three digits long and are in the range 700-799. User 105 then dials the extension number of user 308. In step 903, the IP series multimedia server 101 assigns one of the pooled, compressed voice channels used for voice communication between sites. In step 904, the IP series multimedia server 101 then checks a configuration database for the IP address associated with user 308. A control message is sent to multimedia server 306 via the TCP/IP space WAN 201, requesting the called party 308 to start ringing. Data contained in the control message includes the originator's caller ID. In step 905, the remote multimedia server 306 acknowledges the request and attempts to ring the called extension 308 in the same fashion that a local extension would (i.e., the remote station is now acting as though it was placing the call from the local site). In step 906 , if the called party 308 does not answer, the call is handled by the normal call processing routines to re-route the call (in this case, the call is rerouted to voice mail).

Referring to FIGURE 11, there is illustrated a process implemented within an IP telephony device, such as telephony device 105, which process can be run within DSP 801. The process detects network congestion and notifies the multimedia server 101 via a congestion message. The process begins in step 1101, and proceeds to step 1102 to determine whether the IP telephony device 105 is off the hook. If it is, the process proceeds to step 1103 where audio data packets are received by telephony

device 105 from the hub 103. The audio (voice) data packets being received from hub 103 have been sent by multimedia server 101, and are packets containing audio information communicated between telephony device 105 and some other telecommunications device coupled to the system. As these packets are received, they are saved within the jitter buffer, which fills up to a certain level. After this level is reached, the audio packets will then be played by telephony device 105 to the user through the speaker 821 or handset 818. It is generally understood within the design of such IP telephony devices that when a packet is played to the user, it is replaced in the jitter buffer by an incoming packet. There is some cushion in the jitter buffer, but when the audio packets are not replaced sufficiently, then the ability of the IP telephony device to communicate the audio information to the user in real-time becomes jeopardized. This is described in further detail below. In step 1104, as these packets are run through a jitter buffer, a determination is made whether the number of packets buffered by the jitter buffer falls below a predetermined threshold, or level. If not, the process merely returns to step 1103. However, if level of packets buffered by the jitter buffer falls below the predetermined threshold, or level, in step 1104, the process will proceed to step 1105 to send a congestion message to multimedia server 101.

Note, the process of FIGURE 11 is not limited to audio data, but can be utilized in any system where there is a need to increase the transfer rate of multimedia data between two network devices to overcome bursty transmissions of data in the network. Though the invention is helpful when there is a need to transmit the multimedia data in, or substantially in, real-time, the invention is applicable even when there is not a need for real-time transmissions.

Essentially, a data packet transmitting voice data contains 16 milliseconds (ms) of voice data. For there to be a real-time transmittal of voice communications no more than 16 ms can pass between received data packets. A jitter buffer is utilized to temporarily store received data packets. A jitter buffer generally will hold three data packets passing through the jitter buffer. Typically, up to a 48 ms delay is acceptable with audio communications before such a delay is discernable to the listener. The jitter buffer can be used to monitor whether the congestion on the network has increased to such an extent that unacceptable delays in the receipt of voice data packets is perceived. A jitter buffer will typically use a pointer that points to the buffer entry where the next data packet that is received is to be stored, while an out pointer points to the last jitter buffer. If the pointers become closer, this will indicate that congestion within the network is increasing. How close the pointers are can determine the predetermined threshold that is monitored in step 1104.

Referring next to FIGURES 12A and 12B, a flow diagram is illustrated that is implemented within multimedia server 101 upon receipt of a congestion message from any IP telephony device within the network. The process begins in step 1201, and proceeds to step 1202 to determine whether a congestion message has been received from any telephony device. If yes, the process proceeds to step 1203 to determine whether the multimedia server 101 is already in a quality of service (QOS) mode. If yes, the process will move forward to step 1206. If not, the process will proceed to step 1204 to switch to QOS mode. Thereafter, in step 1205, a signal will then be sent from multimedia server 101 to all (or only a selected group of) IP telephony devices within the network for such devices to begin a QOS algorithm using a Most Aggressive Mode. Such a QOS algorithm is further described below

CISCO EXHIBIT 1004
Page 29 of 345

with respect to FIGURE 10. Thereafter, in step 1206, a timer is started, or restarted if the timer has previously begun and is still running. In step 1207, a determination is made whether the timer has expired. If not, the process will proceed to step 1208 to determine whether another congestion message has been received from any IP telephony device. If not, the process merely returns to step 1207. However, if another congestion message has been received from an IP telephony device, the process will return to step 1206 to restart the timer.

If in step 1207, the timer has expired, the process will proceed to step 1209, where a determination is made whether the QOS mode is in the Most Aggressive Mode. If yes, the process will proceed to step 1211 to then send a signal to all (or a selected group of) IP telephony devices on the network to use a Least Aggressive Mode, which is further described below with respect to FIGURE 10. Thereafter, in step 1212, the previously noted timer will be restarted and the process will return to step 1207. If in step 1209, the QOS mode is not in the Most Aggressive Mode, then in step 1210, a signal will be sent to all IP telephony devices on the network to stop the QOS algorithm described below with respect to FIGURE 10. And the process will return to step 1202.

Referring now to FIGURE 10, there is illustrated a process run within each of the IP telephony devices on the network when such devices receive one of the aforementioned QOS messages from the multimedia server 101. The process begins in step 1001 and proceeds to step 1002 where a determination is made whether one of the aforementioned QOS mode signals has been received from the multimedia server 101. If yes, the process proceeds to step 1003 to determine whether the signal that has been received is a signal indicating that the IP telephony device 105 should enter into

CISCO EXHIBIT 1004
Page 30 of 345

a Most Aggressive Mode. If yes, the process will then proceed to step 1004 to throttle the workstation 106 using the Most Aggressive Mode. The process then returns to step 1002. If in step 1003 it is determined that the signal received from the multimedia server 101 is not a Most Aggressive Mode signal, the process proceeds to step 1005 to determine if the signal received is a signal to the IP telephony device 105 to enter into a least aggressive mode. If yes, the process proceeds to step 1006 to throttle the workstation 106 using the Least Aggressive Mode. If in step 1005 the signal received from the multimedia server 101 is not either to enter into the Most Aggressive Mode or the Least Aggressive Mode, then a determination is made whether the signal received from the multimedia server 101 is to turn off the QOS Mode. If yes, then in step 1008, the IP telephony device 105 discontinues throttling data to and from the workstation 106.

Essentially, the process illustrated in FIGURE 10 has the IP telephony device 105 beginning a hold-off procedure with the workstation 106. The level of aggressiveness, whether it is the Most Aggressive Mode or the Least Aggressive Mode can be thought of as a duty cycle whereby the device blocks data from the workstation 106 for a percentage of the time.

The throttling can be performed using many different methods. One method would be for the telephony device 105 to flood the connection 415 to the workstation 106 with idle patterns (jabber). The various levels of flow control needed could be achieved by a jabber duty cycle. The Most Aggressive Mode may have an eighty percent duty cycle while the Least Aggressive Mode may have a twenty percent duty cycle. During the jabber process, communication between the workstation 106 and

the server 104 is disrupted, allowing more bandwidth for the voice packets between the telephony device 105 and the multimedia server 101.

"Jabbering" is a standard Ethernet process. In local area networking technology, to jabber is to continuously send random data (garbage). This locks up the network with the incessant transmission of the garbage. In an Ethernet network, any node can transmit at any time. If more than one node happens to transmit at the same time, both nodes will notice that a collision has occurred, hold off for some amount of time, then re-transmit. If a collision is detected again, the process continues until the data is delivered. Jabbering is the process of flooding the network with collisions in such a way that no data can actually be transmitted due to the number of collisions. Since the connection between the IP telephony device 105 and workstation 106 is a separate network, the jabbering by the IP telephony device 105 merely stops data from flowing between the IP telephony device 105 and the workstation 106. The network on the other side of the IP telephony device 105 is unaffected because it is in a different "collision domain."

The workstation 106 cannot then transmit data because the jabbering is present. Each side will try to send data to the other side, but every time they try, they will fail because of the jabbering. The source of the jabbering signal is not important. Jabbering can be explained in a hardware fashion as follows. When one and only one station is transmitting, the voltage on the wire is a certain voltage as specified by the IEEE 802.3 Specification. If two stations start to transmit, the voltage is double so any station listening is capable of detecting the collision. When the voltage goes to zero because the offenders are holding off, it is now safe to try again. Jabbering can be thought of as a station placing a static voltage level on the wire between the

CISCO EXHIBIT 1004
Page 32 of 345

workstation 106 and the IP telephony device 105 sufficiently high as to be detected as a collision. Neither the IP telephone 105 or the workstation 106 will attempt to transmit to each other until this voltage level goes away.

The present invention permits the IP telephony device 105 from stopping the workstation 106 from sending data by causing so many collisions that none of the data can make it through. Essentially, data transmission between the IP telephony device 105 and the workstation 106 is frozen. The IP telephony device 105 will perform this jabbering process in bursts. When the collisions stop, the data the workstation 106 was trying to send will then be passed on to the network through the IP telephony device 105. Also, if the IP telephony device 105 was trying to send something from the network to the workstation 106, that side is frozen as well. These collision bursts are generally short enough that the protocol does not time out, but long enough to throttle the data flow. The duty cycle of the collision bursts may be proportional to the amount of data allowed to flow (i.e., if the duty cycle is 80/20, eighty percent of the time data is blocked).

A duty cycle may be used since jabbering cannot continue forever because the underlying protocols such as TCP/IP or NOVELL and the workstation 106 will eventually time out and give up on the data it is trying to send. The duty cycle allows data to flow often enough so that the effective throughput is reduced while allowing the protocols to survive. As an example, consider data flowing unobstructed between the workstation 106 and the network on the other side of the IP telephony device 105. Multimedia transmissions are initiated which, in combination with the network data, starts to choke the network. The detection mechanism (monitoring circuitry) in the IP telephony devices 105 alerts the multimedia server 101 that the network is in trouble

CISCO EXHIBIT 1004
Page 33 of 345

with respect to too much congestion to permit real-time multimedia communications to occur, or merely that the transfer rate of such communications has decreased unsatisfactorily. The multimedia server 101 messages to all of the IP telephony devices that they need to throttle-down the workstation data they are receiving using the most aggressive algorithm (e.g., using an 80/20 duty cycle where eighty percent of the time the devices are in the jabber state, and twenty percent of the time they are allowing data to flow). As the IP telephony devices stop reporting congestion, the multimedia server 101 may issue the next lower level or hold-off (e.g., a 50/50 duty cycle). The multimedia server 101 will continue until a point of equilibrium exists that allows the maximum data flow in the network along with the required multimedia traffic bandwidth.

As an alternative, jitter buffers with the multimedia server 101 may also monitor their level of receipt of multimedia data from individual IP telephony devices to determine whether a congestion message should be sent to the IP telephony devices to throttle down data through such devices from their respective workstations.

The present invention incorporates many other unique features. Essentially, the present invention is able to emulate one large, monolithic phone system. As such, features available at one particular site are available remotely to all sites. For example, the present invention can implement a direct station selection with busy indication feature providing an ability for a user at one IP telephone to see that another person in a remote system at another IP telephone is currently idle, busy, or in a do not disturb state. Another feature of the present invention is an ability to park a call in one system and page a user in a remote system to pick up the parked call. The remote user answers the call in the same manner they would a local call. Another

CISCO EXHIBIT 1004
Page 34 of 345

feature capable within the present invention is an ability to transfer a call to a remote site, and if the call transferred to the remote site goes unanswered, the call will be returned to the originator. The present invention also provides for call forwarding between systems. For example, if a user is going to be in a remote site for some period of time, that user can forward his/her calls to that location.

Another feature available within the present invention is call rerouting. When a call goes unanswered, the system of the present invention allows the call to be rerouted to voicemail, another extension, etc. In a remote site implementation, these destinations do not have to be in the same physical system. In other words, a call into a local system where the caller has dialed an extension associated with a remote system, the local system will automatically reroute that call to the remote system.

Another unique feature of the present invention allows a user, such as a supervisor, to monitor the audio conversations of users on the system and current display information of another station. This can be done between remote systems so that the monitoring individual does not have to be in the same system as the user who is being monitored.

Yet another unique feature of the present invention permits automatic call distribution agents to be distributed among remote systems with all the feature functionality available to a single system.

Yet another unique feature of the present invention permits a user to answer a call in a remote site using the pick up feature. The present invention allows members of departments and live ringing groups to be located anywhere in the distributed system.

CISCO EXHIBIT 1004
Page 35 of 345

The present invention also increases the voicemail functionality of a telephone system. A virtual mail box key feature allows a user to monitor the status of a mail box in a remote system. If the key is lit, the user can press the key to retrieve messages stored in that mail box. Another feature is the quick group feature that allows a user to leave voicemail messages in a number of recipients' mail boxes by merely pressing their associated DSS key. The recipients can be in remote systems as well as the local system. Like the quick groups feature, a quick move feature allows a user to move a copy of a voicemail message to a number of recipients by merely depressing their respective DSS keys on the user's telephone.

Another unique feature to the present invention permits a user to dial numbers stored in a series of lists. A user is permitted to scroll through a list of remote sites. When the user finds the desired site, the user is then presented with the same options a user local to that site would have. An example of this feature would allow a user in Los Angeles to locate the New York site, then call Bob Smith using a particular feature all without the need of an operator or printed directory.

Although the present invention and its advantages have been described in detail, it should be understood that various changes, substitutions and alterations can be made herein without departing from the spirit and scope of the invention as defined by the appended claims.

WHAT IS CLAIMED IS:

1. An information handling system comprising:

a hub;

a multimedia server coupled to the hub;

a telephony device coupled to the hub; and

a first network device coupled to the hub through the telephony device, wherein the telephony device includes circuitry for throttling data sent from the first network device.

2. The system as recited in claim 1, further comprising:

a second network device coupled to the hub, wherein the data sent from the first network device is addressed for transmission to the second network device.

3. The system as recited in claim 2, wherein the hub, multimedia server, second network device, telephony device, and first network device are coupled to each other via a network.

4. The system as recited in claim 3, wherein the network is a TCP/IP network.

5. The system as recited in claim 4, wherein the network is a packet switched network.

CISCO EXHIBIT 1004
Page 37 of 345

6. The system as recited in claim 3, wherein the telephony device and multimedia server communicate using an IP protocol.

7. The system as recited in claim 1, wherein the throttling circuitry reduces a future amount of data from being transferred from the first network device if the amount of data exceeds a predetermined threshold.

8. The system as recited in claim 1, wherein the telephony device includes circuitry for monitoring an amount of data addressed to and received by the telephony device, wherein the throttling circuitry reduces a future amount of data from being transferred from the first network device if the amount of data addressed to and received by the telephony device falls below a predetermined threshold.

9. The system as recited in claim 8, wherein the monitoring circuitry comprises a jitter buffer where the predetermined threshold is a predetermined level within the jitter buffer.

10. The system as recited in claim 8, wherein the monitoring circuitry further comprises circuitry for sending a congestion message to the multimedia server when the amount of data addressed to and received by the telephony device falls below the predetermined threshold.

11. The system as recited in claim 10, wherein the multimedia server further comprises circuitry for sending a throttling signal to the telephony device in response to receipt of the congestion message from the monitoring circuitry.

12. The system as recited in claim 11, wherein the throttling circuitry in the telephony device throttles the future amount of data sent from the first network device in response to receipt of the throttling signal.

13. The system as recited in claim 12, wherein the throttling signal includes a mode level in which the throttling circuitry should operate.

14. The system as recited in claim 13, wherein the throttling circuitry adjusts its level of throttling of the data in response to the mode level included in the throttling signal.

15. The system as recited in claim 14, wherein the mode level is a most aggressive mode, wherein the throttling circuitry will throttle the future amount of data sent from the first network device at a highest level in response to the mode level being in the most aggressive mode.

16. The system as recited in claim 15, wherein the sending circuitry in the multimedia server will designate the mode level at the most aggressive mode as long as the congestion message is received from any telephony device coupled to the multimedia server within a specified time period.

17. The system as recited in claim 16, wherein the throttling signal will switch to a least aggressive mode if the congestion message is not received from any telephony device coupled to the multimedia server within the specified time period.

18. The system as recited in claim 17, wherein the throttling circuitry will throttle the future amount of data sent from the first network device at a level lower than the highest level in response to the mode level being in the least aggressive mode.

19. The system as recited in claim 18, wherein the throttling signal will contain a signal to stop the throttling of the future amount of data if the congestion message is not received from any telephony device coupled to the multimedia server within the specified time period while the mode level has been in the least aggressive mode.

20. The system as recited in claim 19, further comprising another telephony device coupled between the hub and a second network device, wherein the telephony device also includes throttling circuitry for throttling a future amount of data sent from the second network device in response to receipt of the throttling signal.

21. The system as recited in claim 1, wherein the data sent from the first network device is sufficiently throttled so that the telephony device can communicate real-time multimedia signals to and from the multimedia server.

CISCO EXHIBIT 1004
Page 40 of 345

22. The system as recited in claim 1, wherein the throttling results in no data being sent from the first network device to the telephony device.

Attorney Docket No. 16312-P005US

23. An information handling system comprising:

a TCP/IP network;

a hub;

a multimedia server coupled to the hub via the TCP/IP network;

a first IP telephony device coupled to the hub via the TCP/IP network;

a first network device coupled to the first IP telephony device;

a second network device coupled to the hub via the TCP/IP network, wherein data sent from the first network device is addressed for transmission to the second network device and is transmitted through the first IP telephony device to the TCP/IP network, wherein the first IP telephony device includes first circuitry for monitoring if an amount of multimedia data being addressed to the IP telephony device and received over the TCP/IP network falls below a first predetermined threshold, wherein the first IP telephony device includes first circuitry for throttling the data sent from the first network device in response to the first monitoring circuitry determining that the amount of multimedia data being received by the first IP telephony device over the TCP/IP network falls below the first predetermined threshold.

24. The system as recited in claim 23, further comprising:

a second IP telephony device coupled to the hub via the TCP/IP network; and

a third network device coupled to the second IP telephony device, wherein data sent from the third network device is addressed for transmission to the second network device and is transmitted through the second IP telephony device to the TCP/IP network,

wherein the second IP telephony device includes second circuitry for throttling the data sent from the third network device in response to the first monitoring circuitry determining that the amount of multimedia data being received by the first IP telephony device over the TCP/IP network falls below the first predetermined threshold.

25. The system as recited in claim 24, wherein the first monitoring circuitry further comprises first circuitry for sending a first congestion message to the multimedia server over the TCP/IP network when the amount of multimedia data being received by the first IP telephony device over the TCP/IP network falls below the first predetermined threshold.

26. The system as recited in claim 25, wherein the multimedia server further comprises circuitry for sending a throttling signal to the first and second IP telephony devices over the TCP/IP network in response to receipt of the first congestion message from the first monitoring circuitry.

27. The system as recited in claim 26, wherein the first throttling circuitry in the first IP telephony device throttles the data sent from the first network device in response to receipt of the throttling signal, wherein the second throttling circuitry in the second IP telephony device throttles the data sent from the third network device in response to receipt of the throttling signal.

CISCO EXHIBIT 1004
Page 43 of 345

28. The system as recited in claim 27, wherein the throttling signal includes a mode level in which the first and second throttling circuitries should operate.

29. The system as recited in claim 28, wherein the first throttling circuitry adjusts its level of throttling of the data in response to the mode level included in the throttling signal, wherein the second throttling circuitry adjusts its level of throttling of the data in response to the mode level included in the throttling signal.

30. The system as recited in claim 29, wherein the mode level is a most aggressive mode, wherein the first throttling circuitry will throttle the data sent from the first network device at a highest level in response to the mode level being in the most aggressive mode, wherein the second throttling circuitry will throttle the data sent from the third network device at a highest level in response to the mode level being in the most aggressive mode.

31. The system as recited in claim 30, wherein the second IP telephony device includes second circuitry for monitoring if a second amount of multimedia data being received by the second IP telephony device over the TCP/IP network falls below a second predetermined threshold, wherein the second monitoring circuitry further comprises second circuitry for sending a second congestion message to the multimedia server over the TCP/IP network when the second amount of multimedia data being received by the second IP telephony device over the TCP/IP network falls below the second predetermined threshold.

Attorney Docket No. 16312-P005US

32. The system as recited in claim 31, wherein the sending circuitry in the multimedia server will designate the mode level at the most aggressive mode as long as the first or second congestion messages are received within a specified time period.

33. The system as recited in claim 31, wherein the throttling signal will switch to a least aggressive mode if the congestion message is not received from any IP telephony device coupled to the multimedia server within the specified time period.

34. The system as recited in claim 32, wherein the throttling circuitry will throttle the data sent from the second network device at a level lower than the highest level in response to the mode level being in the least aggressive mode.

35. The system as recited in claim 33, wherein the throttling signal will contain a signal to stop the throttling of the data if the congestion message is not received from any IP telephony device coupled to the multimedia server within the specified time period while the mode level has been in the least aggressive mode.

36. The system as recited in claim 34, wherein the multimedia data includes real-time audio information.

37. The system as recited in claim 23, wherein the data sent from the first network device is sufficiently throttled so that the first IP telephony device can communicate real-time signals to and from the multimedia server over the TCP/IP network.

CISCO EXHIBIT 1004
Page 45 of 345

38. In an information handling system comprising a hub, a multimedia server ("multimedia server") coupled to the hub, a telephone coupled to the hub, a workstation coupled to the hub through the telephone, and a data server coupled to the hub, a method comprising the steps of:

transferring data from the workstation to the telephone, wherein the data sent from the workstation is addressed for transmission to the data server;

communicating audio information between the telephone and the multimedia server; and

sufficiently throttling the data sent from the workstation to the telephone to increase a rate of transfer of the audio information during the communicating step.

39. The method as recited in claim 38, wherein the hub, multimedia server, data server, telephone, and workstation are coupled to each other via a network.

40. The method as recited in claim 39, wherein the network is a TCP/IP network.

41. The method as recited in claim 39, wherein the network is a packet switched network.

42. The method as recited in claim 39, wherein the telephone and multimedia server communicate using an IP protocol.

CISCO EXHIBIT 1004
Page 46 of 345

43. The method as recited in claim 38, wherein the throttling step further comprises the step of reducing a future amount of data from being transferred from the workstation if the amount of data exceeds a predetermined threshold.

44. The method as recited in claim 38, wherein the throttling step further comprises the step of monitoring an amount of the audio information being received by the telephone from the multimedia server.

45. The method as recited in claim 44, wherein the monitoring step further comprises the step of monitoring a predetermined level within a jitter buffer.

46. The method as recited in claim 44, wherein the monitoring step further comprises the step of the telephone sending a congestion message to the multimedia server when the amount of the audio information falls below the predetermined level.

47. The method as recited in claim 46, further comprising the step of the multimedia server sending a throttling signal to the telephone in response to receipt of the congestion message.

48. The method as recited in claim 47, wherein the throttling step operates in response to receipt of the throttling signal.

49. The method as recited in claim 48, wherein the throttling signal includes a mode level.

CISCO EXHIBIT 1004
Page 47 of 345

50. The method as recited in claim 49, wherein the throttling step further comprises the step of adjusting a level of throttling of the data in response to the mode level included in the throttling signal.

51. The method as recited in claim 50, wherein the step of the multimedia server sending a throttling signal to the telephone in response to receipt of the congestion message further comprises the step of setting the mode level to a most aggressive mode, wherein the throttling step will throttle the future amount of data sent from the workstation at a highest level in response to the mode level being in the most aggressive mode.

52. The method as recited in claim 51, wherein the setting step will designate the mode level at the most aggressive mode as long as the congestion message is received from any telephone coupled to the multimedia server within a specified time period.

53. The method as recited in claim 52, wherein the step of the multimedia server sending a throttling signal to the telephone in response to receipt of the congestion message further comprises the step of setting the mode level to a least aggressive mode if the congestion message is not received from any telephone coupled to the multimedia server within the specified time period.

54. The method as recited in claim 53, wherein the throttling step will throttle the future amount of data sent from the workstation at a level lower than the highest level in response to the mode level being in the least aggressive mode.

55. The method as recited in claim 54, wherein the step of the multimedia server sending a throttling signal to the telephone in response to receipt of the congestion message further comprises the step of sending a message to stop the throttling of the future amount of data if the congestion message is not received from any telephone coupled to the multimedia server within the specified time period while the mode level has been in the least aggressive mode.

56. The method as recited in claim 38, wherein the throttling results in no data being sent from the workstation to the telephone.

CISCO EXHIBIT 1004
Page 49 of 345

57. An IP telephony device comprising:

an input data port for receiving data, wherein the data is addressed for transmission to a location other than the IP telephony device;

circuitry for communicating information to and from the IP telephony device; and

circuitry for sufficiently throttling the data so that the communication of the information can be performed in real-time.

58. The IP telephony device as recited in claim 57, wherein the IP telephony device communicates the information using an IP protocol.

59. The IP telephony device as recited in claim 58, wherein the monitoring circuitry further comprises circuitry for sending a congestion message from a data output port when the amount of the information being received by the IP telephony device falls below a predetermined level.

60. The IP telephony device as recited in claim 59, wherein the throttling circuitry throttles the future amount of data received at the input data port in response to receipt of a throttling signal at the input data port, wherein the throttling signal is a function of the congestion message.

61. The IP telephony device as recited in claim 60, wherein the throttling signal includes a mode level in which the throttling circuitry should operate.

CISCO EXHIBIT 1004
Page 50 of 345

62. The IP telephony device as recited in claim 61, wherein the throttling circuitry adjusts its level of throttling of the data in response to the mode level included in the throttling signal.

63. The IP telephony device as recited in claim 62, wherein when the mode level is a most aggressive mode, the throttling circuitry will throttle the future amount of data at a highest level in response to the mode level being in the most aggressive mode.

64. The IP telephony device as recited in claim 63, wherein the throttling circuitry will throttle the future amount of data sent from the workstation at a level lower than the highest level in response to the mode level being in a least aggressive mode.

65. The IP telephony device as recited in claim 57, further comprising:

a microphone;

a speaker; and

circuitry for communicating the audio information to the speaker and from the microphone.

66. The IP telephony device as recited in claim 60, further comprising:

a microphone;

a speaker; and

circuitry for communicating the audio information to the speaker and from the microphone.

Attorney Docket No. 16312-P005US

67. A multimedia server comprising:

a network connection for connecting the multimedia server to a data network;

circuitry operable for communicating audio information with a telephone connected to the data network;

circuitry operable for sending a throttling signal onto the data network in response to receipt of a congestion message from the data network.

68. The multimedia server as recited in claim 67, wherein the network is a TCP/IP network.

69. The multimedia server as recited in claim 67, wherein the network is a packet switched network.

70. The multimedia server as recited in claim 67, wherein the communicating circuitry further comprises circuitry operable for communicating the audio information using an IP protocol.

71. The multimedia server as recited in claim 68, wherein the throttling signal includes a mode level.

72. The multimedia server as recited in claim 71, wherein the sending circuitry will designate the mode level at a most aggressive mode as long as the congestion message is received within a specified time period.

73. The multimedia server as recited in claim 72, wherein the throttling signal will switch to a least aggressive mode if the congestion message is not received within the specified time period.

74. The multimedia server as recited in claim 73, wherein the throttling signal will contain a stop data throttling signal if the congestion message is not received within the specified time period while the mode level has been in the least aggressive mode.

75. The multimedia server as recited in claim 67, further comprising:

a peripheral card adaptable for coupling to a telecommunications network.

76. The multimedia server as recited in claim 75, wherein the telecommunications network is a public switched telephone network.

77. The multimedia server as recited in claim 75, further comprising:

switching circuitry for communicating the audio information between the network connection and the peripheral card.

CISCO EXHIBIT 1004
Page 53 of 345

VOICE OVER IP TELEPHONE SYSTEM

ABSTRACT OF THE DISCLOSURE

An information handling system comprises a TCP/IP network connecting a hub to a multimedia server and the hub to a data server, and the hub to an IP telephony device that is then coupled to a network device. Data sent from the network device is addressed for transmission to the data server and is transmitted through the IP telephony device to the TCP/IP network. The IP telephony device monitors when an amount of data being received over the network falls below a predetermined threshold. If this occurs, the IP telephony device will send a signal to the multimedia server, which will then generate a congestion signal to send to all or selected IP telephony devices in the network to throttle data being received by the IP telephony devices from their respective connected network devices.

CISCO EXHIBIT 1004
Page 54 of 345

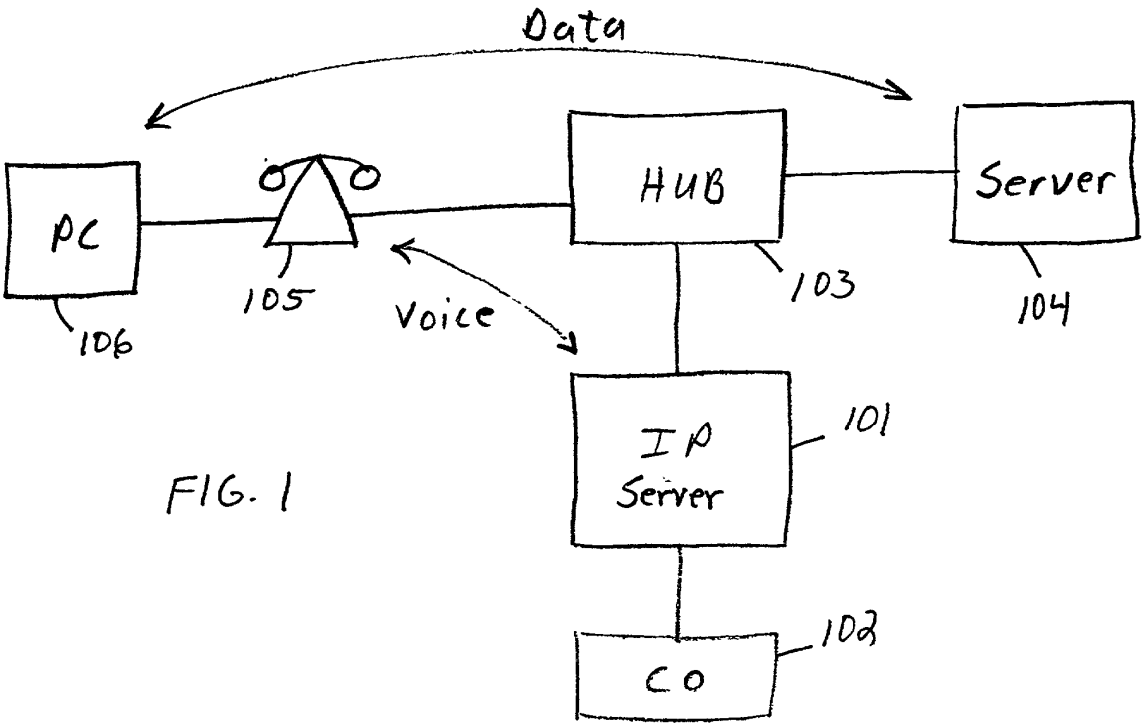
Data
PC
HUB
Server
105
Voice
103
104
106
IP
Server
101
102
CO

FIG. 1

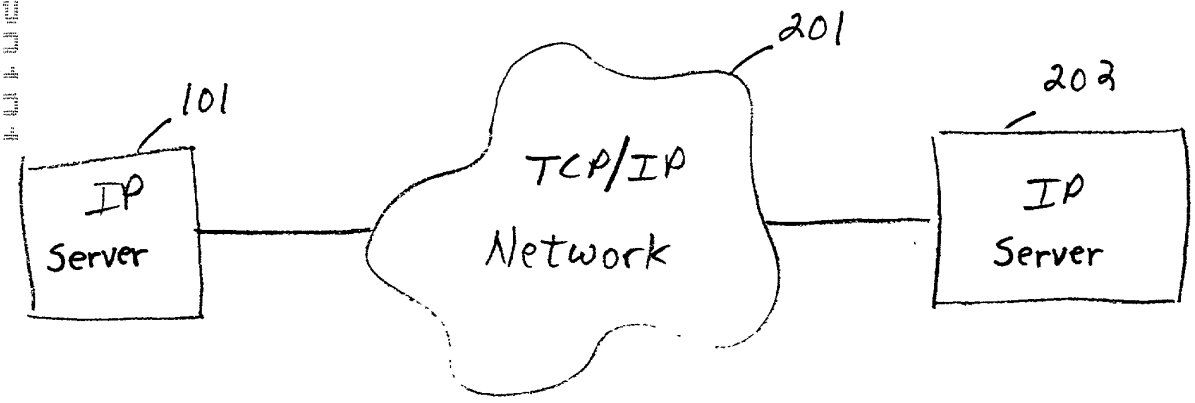
201
101
202
IP
Server
TCP/IP
Network
IP
Server

FIG. 2

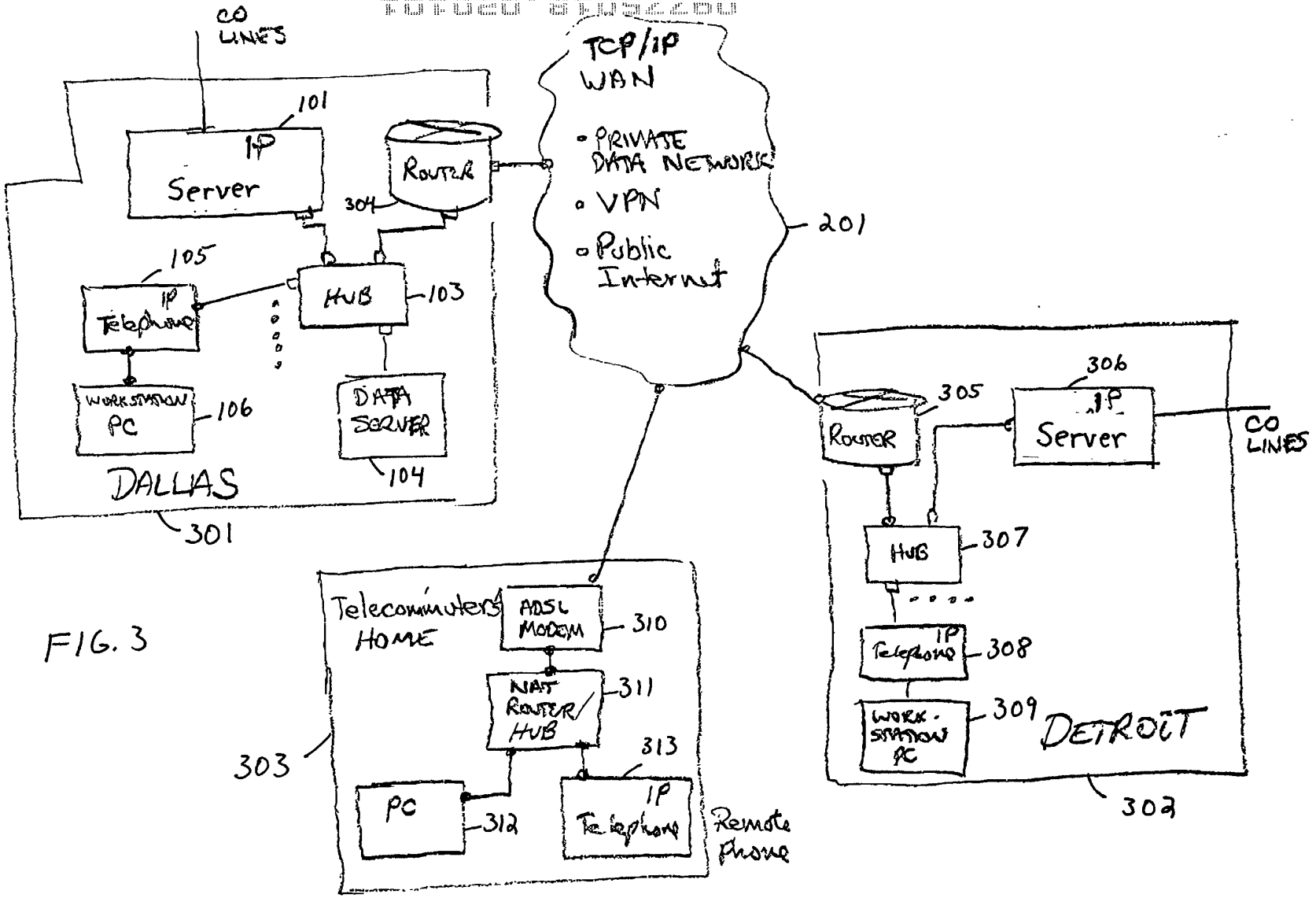

FIG. 3

CISCO EXHIBIT 1004
Page 56 of 345

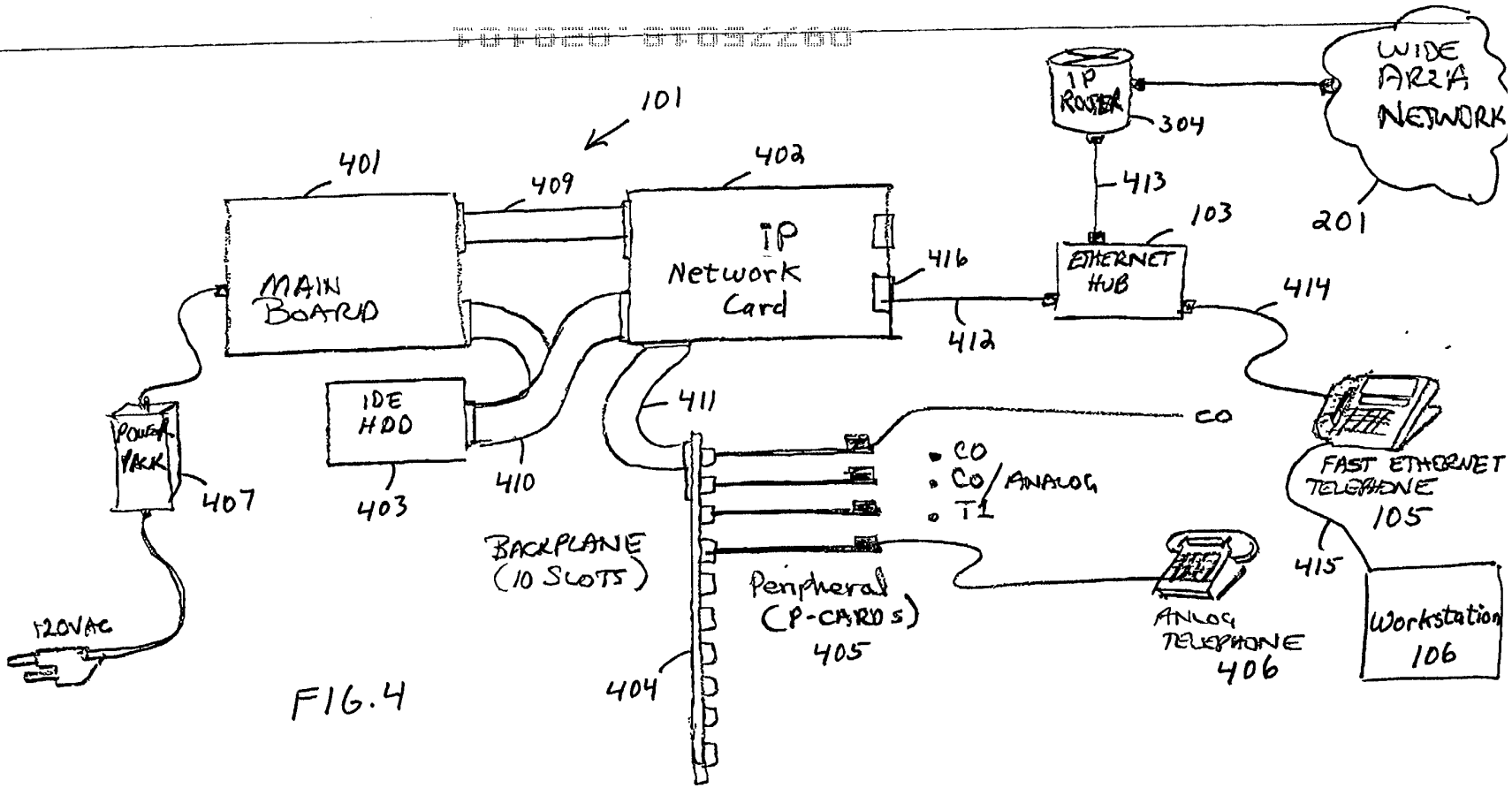
101
401
409
402
MAIN BOARD
IP Network Card
IP ROUTER
304
WIDE AREA NETWORK
201
413
103
ETHERNET HUB
416
414
412
411
IDE HDD
403
410
POWER PACK
407
120VAC
BACKPLANE (10 SLOTS)
CO
• CO
• CO/ANALOG
• T1
Peripheral (P-CARDS)
405
404
FAST ETHERNET TELEPHONE
105
415
ANLOG TELEPHONE
406
Workstation
106
301

FIG. 4

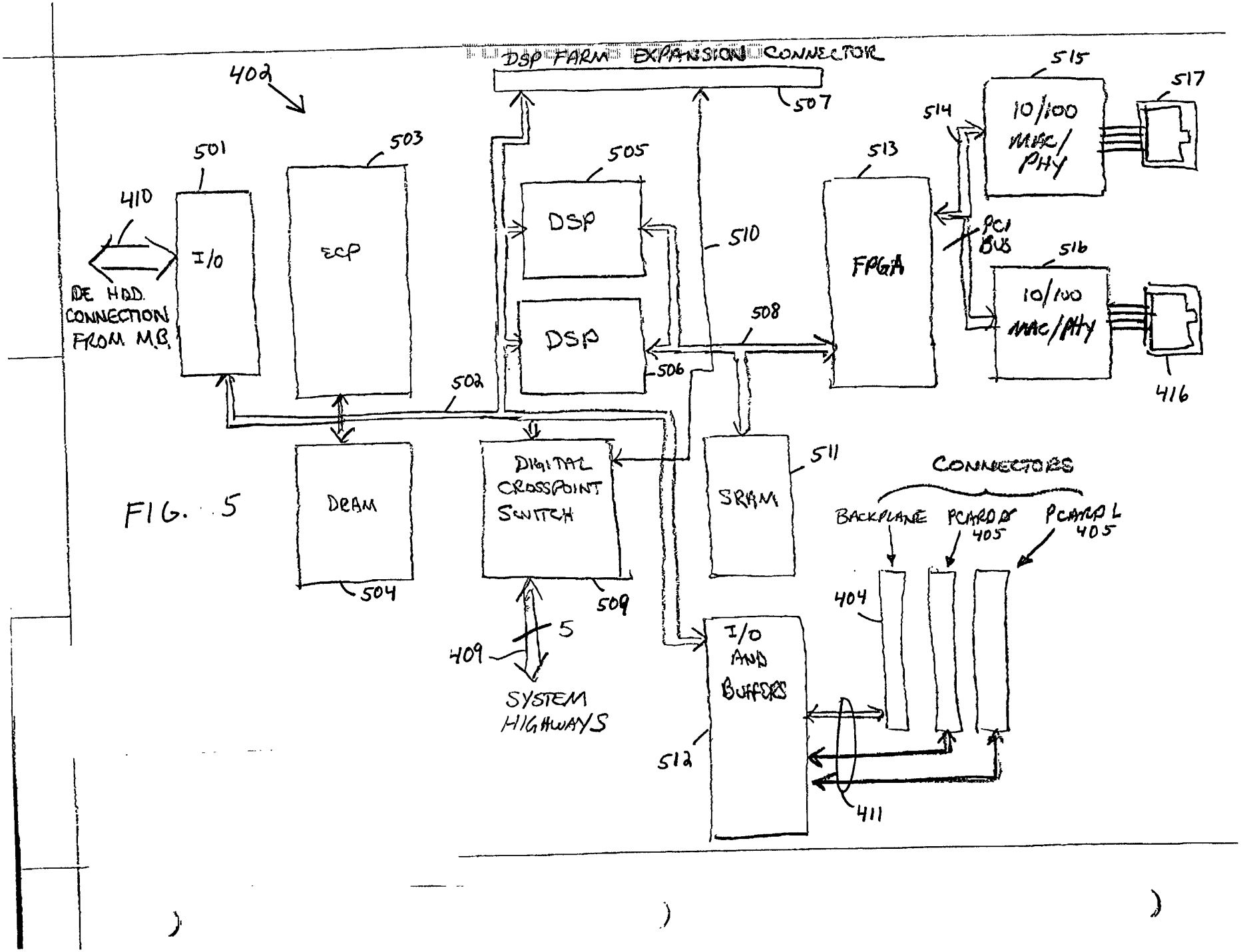

FIG. 5

CISCO EXHIBIT 1004
Page 58 of 345

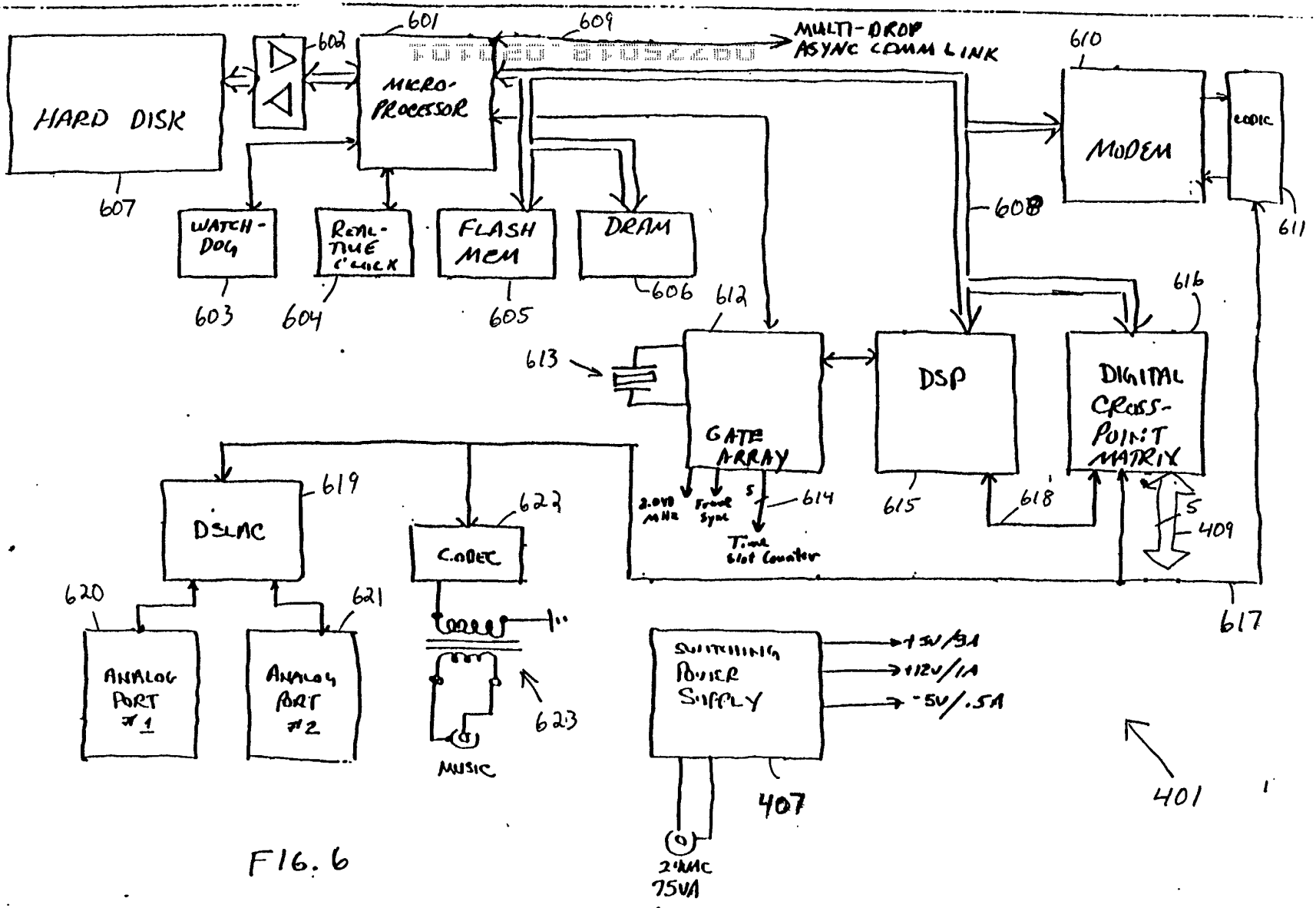

F16.6

CISCO EXHIBIT 1004
Page 59 of 345

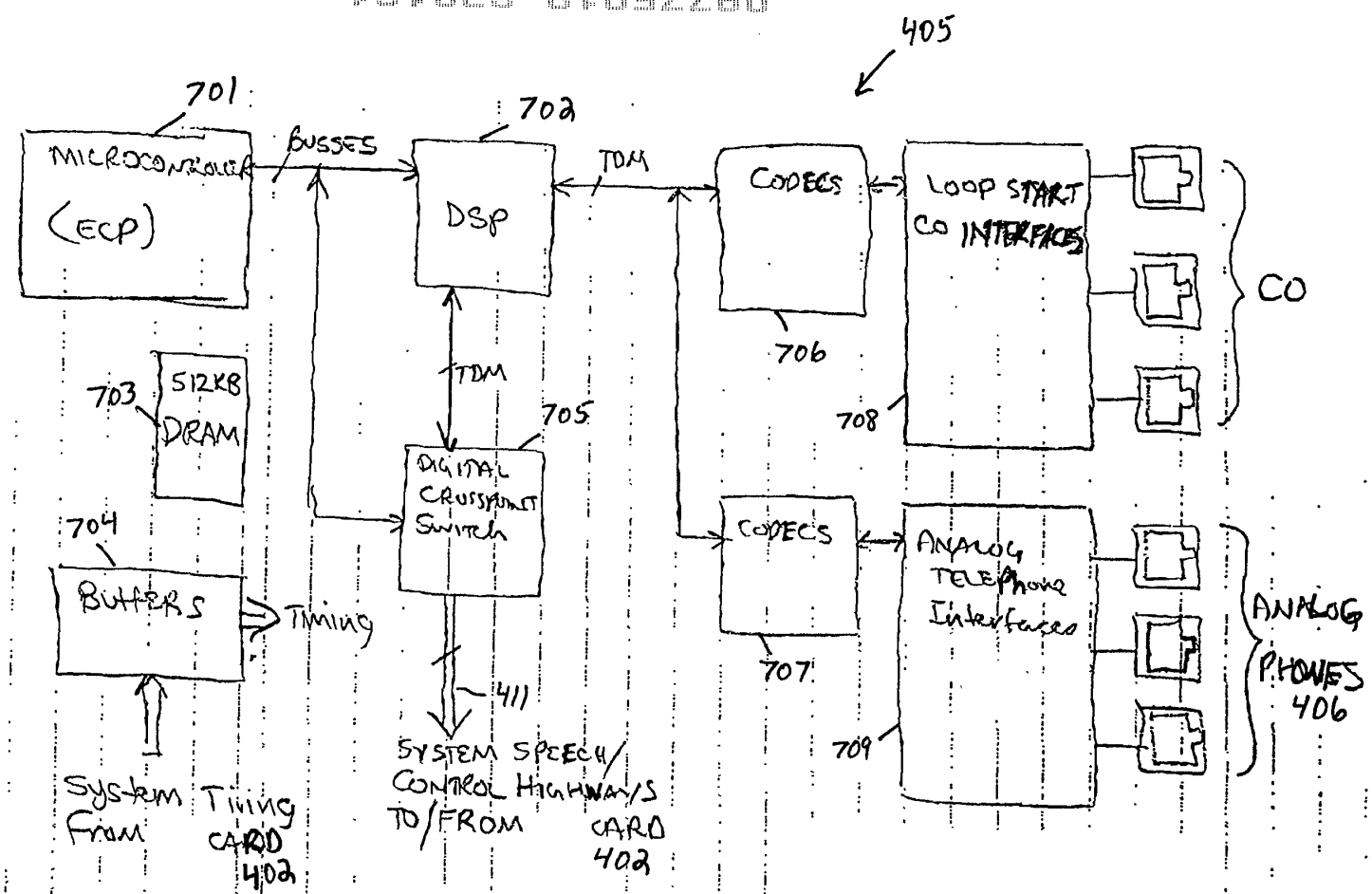
405
701
MICROCONTROLLER
(ECP)
BUSSES
702
DSP
TDM
CODECS
706
LOOP START
CO INTERFACES
708
CO
703
512KB
DRAM
TDM
705
DIGITAL
CROSSPOINT
SWITCH
704
BUFFERS
Timing
CODECS
707
ANALOG
TELEPHONE
Interfaces
709
ANALOG
PHONES
406
411
SYSTEM SPEECH/
CONTROL HIGHWAYS
TO/FROM
CARD
402
System Timing
From
CARD
402

FIG. 7

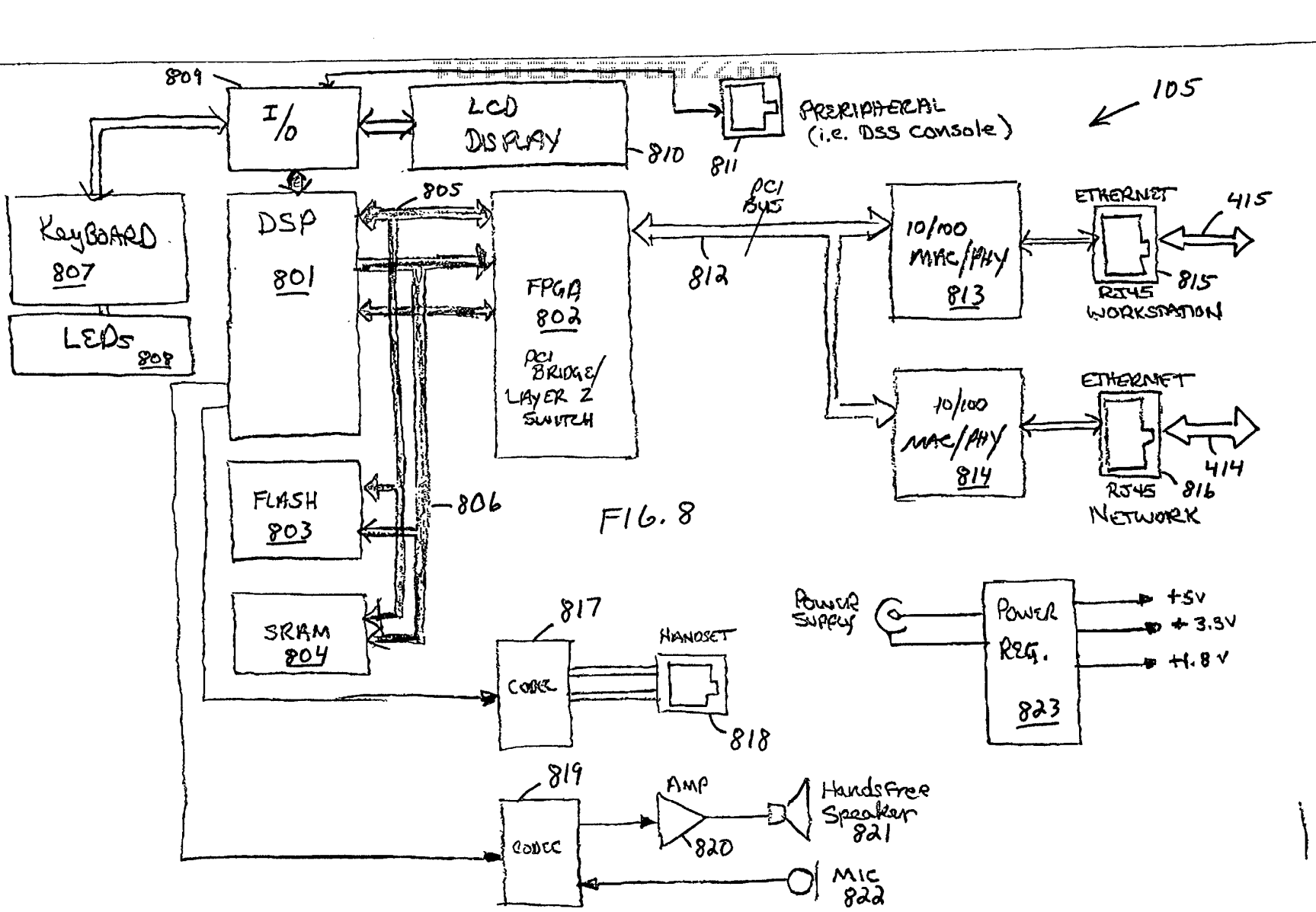
809
I/O
LCD DISPLAY
810
PERIPHERAL (i.e. DSS console)
811
105
KEYBOARD 807
LEDs 808
DSP 801
805
FPGA 802
PCI BRIDGE/ LAYER 2 SWITCH
PCI BUS
812
10/100 MAC/PHY 813
ETHERNET
415
RJ45 WORKSTATION
815
10/100 MAC/PHY 814
ETHERNET
414
RJ45 NETWORK
816
FLASH 803
806
SRAM 804
817
CODEC
HANDSET
818
POWER SUPPLY
POWER REG. 823
+5V
+3.3V
+1.8V
819
CODEC
AMP
820
Handsfree Speaker 821
MIC 822

FIG. 8

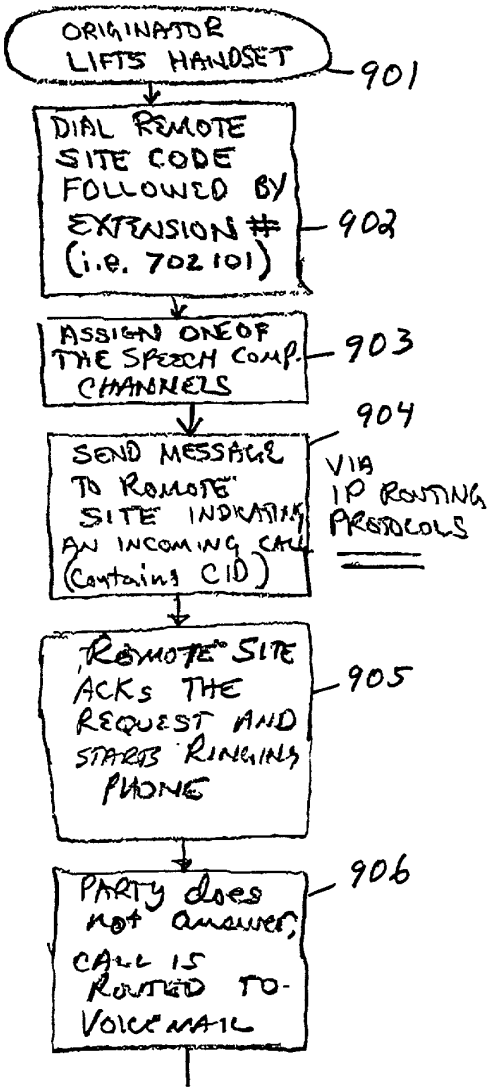
ORIGINATOR LIFTS HANDSET
901
DIAL REMOTE SITE CODE FOLLOWED BY EXTENSION # (i.e. 702101)
902
ASSIGN ONE OF THE SPEECH COMP. CHANNELS
903
904
SEND MESSAGE TO REMOTE SITE INDICATING AN INCOMING CALL (Contains CID)
VIA IP ROUTING PROTOCOLS
REMOTE SITE ACKS THE REQUEST AND STARTS RINGING PHONE
905
PARTY does not answer; CALL IS ROUTED TO VOICEMAIL
906

FIG. 9

FIG. 10

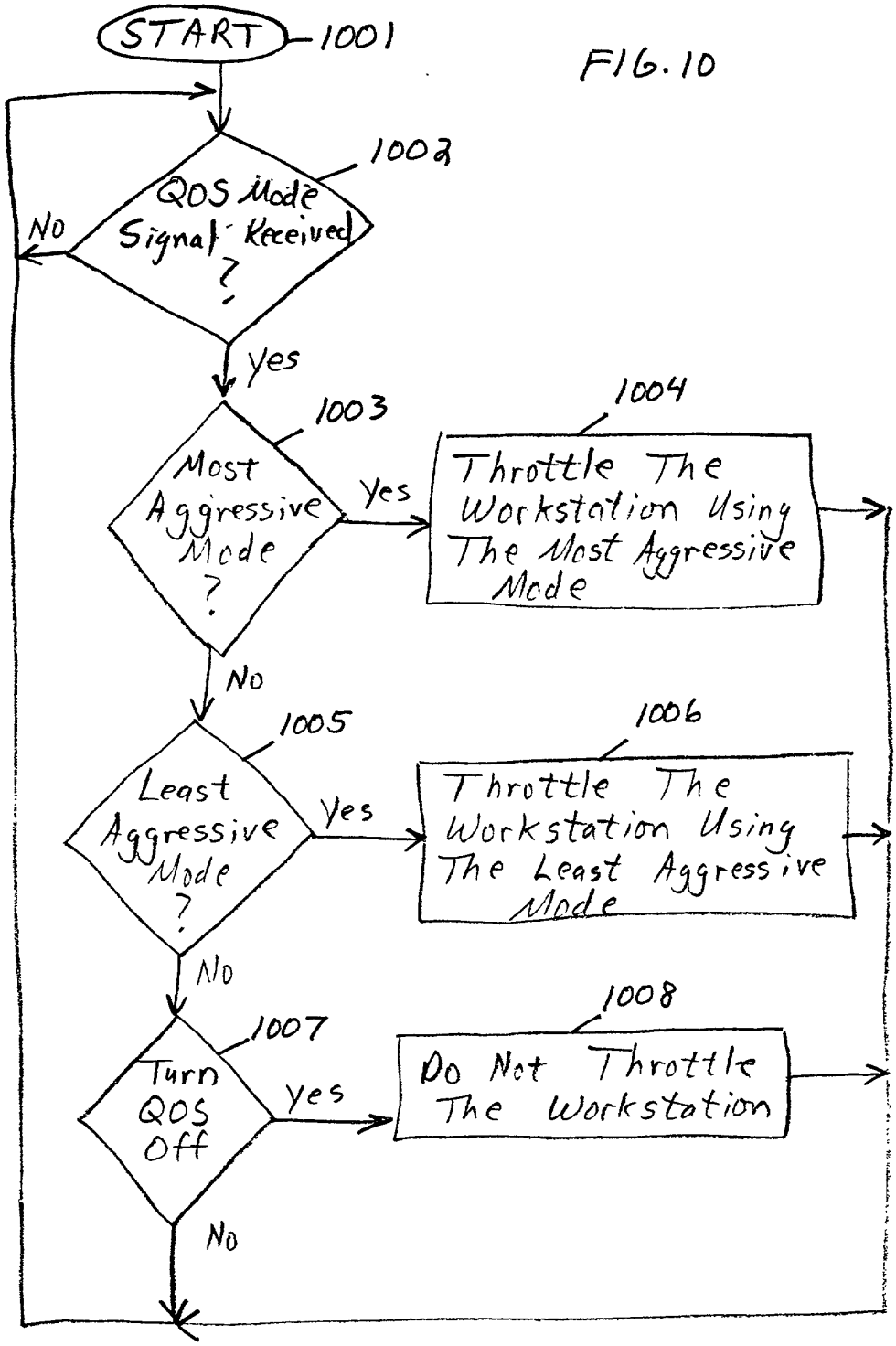

Exhibit 1004 - Page 63 of 345

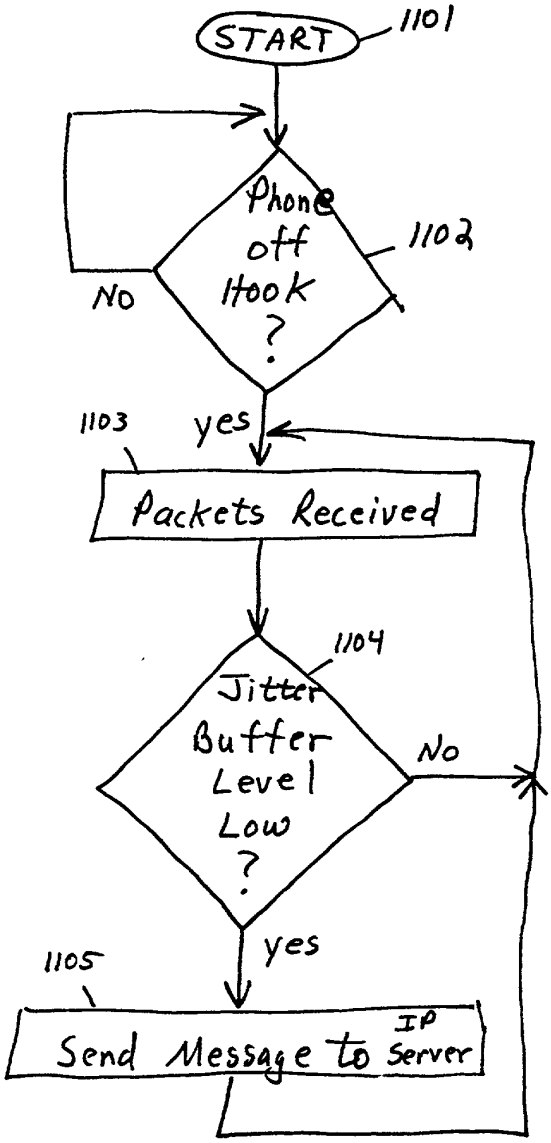
START
1101
Phone off Hook ?
1102
No
yes
1103
Packets Received
Jitter Buffer Level Low ?
1104
No
yes
1105
Send Message to IP Server

FIG. 11

FIG. 12A

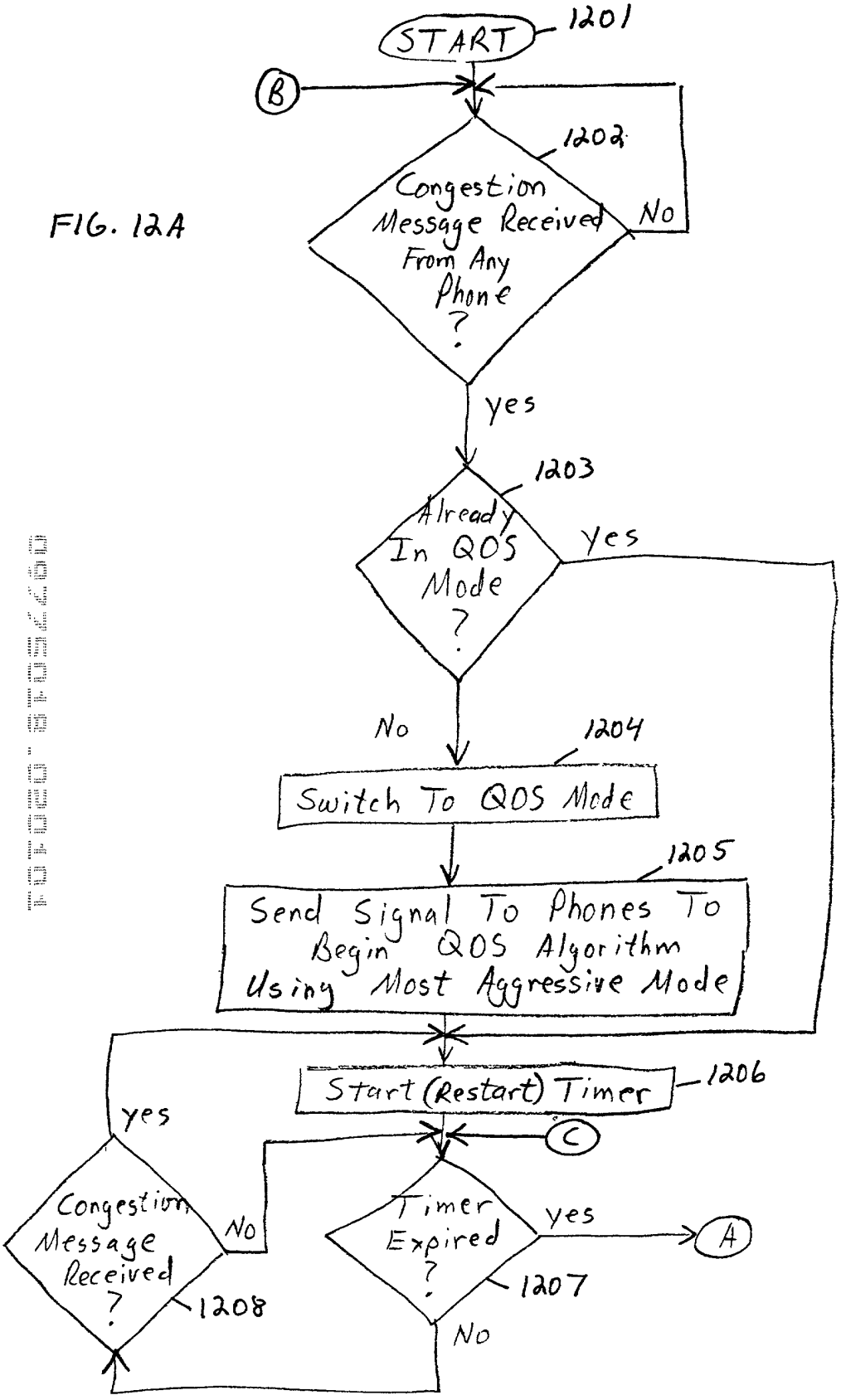

CISCO EXHIBIT 1004
Page 65 of 345

FIG. 12B

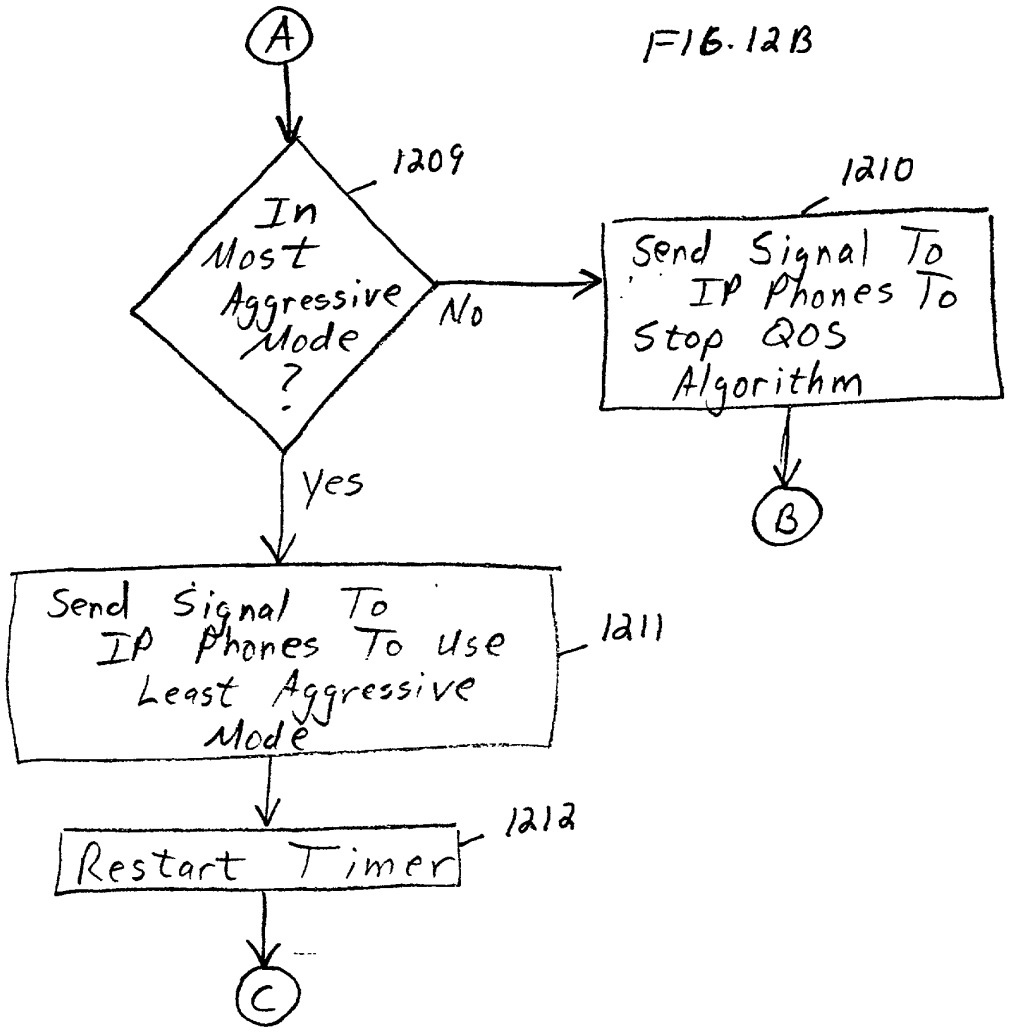

Exhibit 1004 - Page 66 of 345

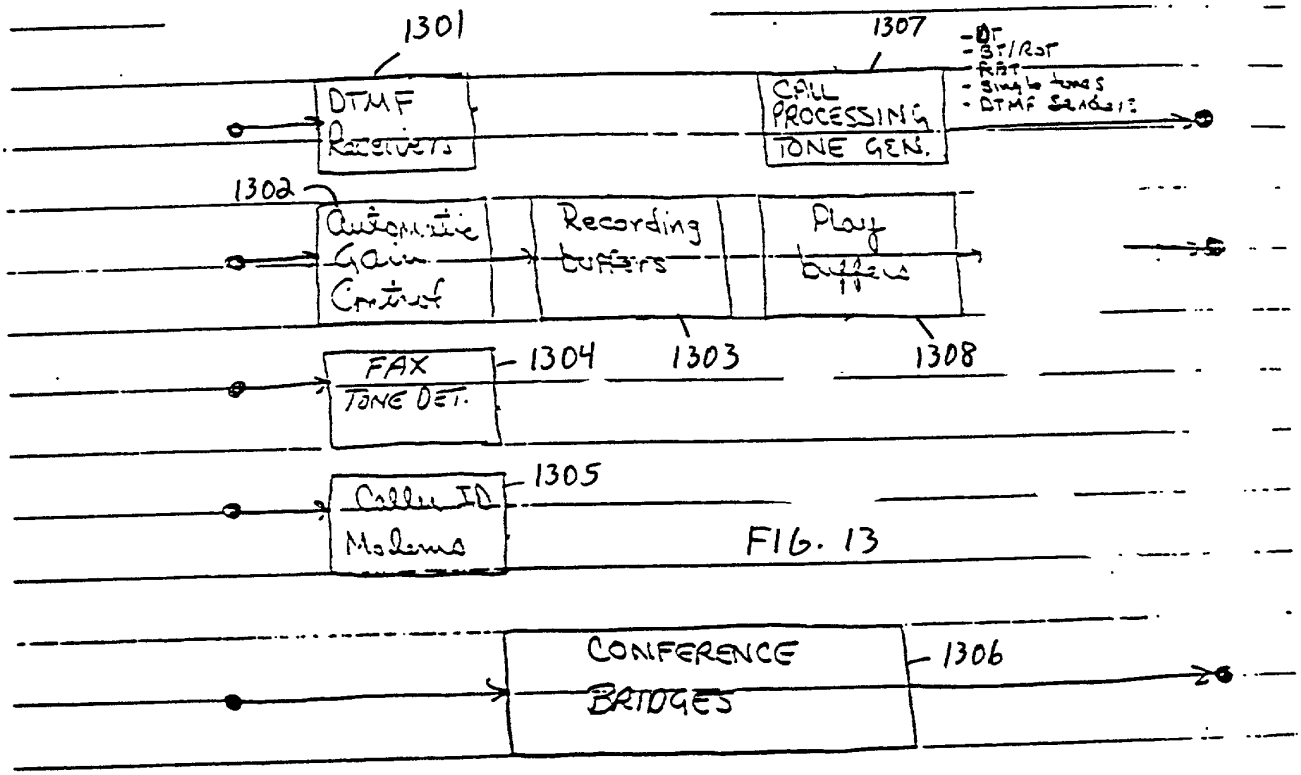
1301
DTMF
Receivers
1307
CALL
PROCESSING &
TONE GEN.
- DT
- BT/RAT
- RAT
- single tones
- DTMF sequences
1302
Automatic
Gain
Control
Recording
buffers
Play
buffers
FAX
TONE DET.
1304
1303
1308
Caller ID
Modems
1305

FIG. 13

CONFERENCE
BRIDGES
1306

Best Available Copy

J1033 U.S. PTO
09/775018
02/01/01

Class	Subclass	ISSUE CLASSIFICATION

JC3
897

U.S. **UTILITY** Patent Application

O.I.P.E.	PATENT DATE
SCANNED 5/8 Q.A. Am	

APPLICATION NO.	CONT/PRIOR	CLASS	SUBCLASS	ART UNIT	EXAMINER
09/775018		370	229	2661	VAN DOREN

APPLICANTS: Eric Suder
Harold Hansen

TITLE: Quality of service in a voice over IP telephone system

PTO-2040
12/99

ISSUING CLASSIFICATION

ORIGINAL		CROSS REFERENCE(S)	
CLASS	SUBCLASS	CLASS	SUBCLASS (ONE SUBCLASS PER BLOCK)
INTERNATIONAL CLASSIFICATION			
			☐ Continued on Issue Slip Inside File Jacket

☐ TERMINAL DISCLAIMER	DRAWINGS			CLAIMS ALLOWED	
	Sheets Drwg.	Figs. Drwg.	Print Fig.	Total Claims	Print Claim for O.G.
☐ The term of this patent subsequent to _____ (date) has been disclaimed.	_____ (Assistant Examiner) _____ (Date)			NOTICE OF ALLOWANCE MAILED	
☐ The term of this patent shall not extend beyond the expiration date of U.S Patent. No. _____	_____ (Primary Examiner) _____ (Date)			ISSUE FEE	
				Amount Due	Date Paid
☐ The terminal ____months of this patent have been disclaimed.	_____ (Legal Instruments Examiner) _____ (Date)			ISSUE BATCH NUMBER	

WARNING:
The information disclosed herein may be restricted. Unauthorized disclosure may be prohibited by the United States Code Title 35, Sections 122, 181 and 368. Possession outside the U.S. Patent & Trademark Office is restricted to authorized employees and contractors only.

Form PTO-436A
(Rev. 6/99)

FILED WITH: ☐ DISK (CRF) ☐ FICHE ☐ CD-ROM
(Attached in pocket on right inside flap)

(FACE)

[redacted]

Best Available Copy

SEARCHED

Class	Sub.	Date	Exmr.
370	229	7/8/04	CR
	362		
	363		
	401		
	230		

SEARCH NOTES
(INCLUDING SEARCH STRATEGY)

	Date	Exmr.

INTERFERENCE SEARCHED

Class	Sub.	Date	Exmr.

(RIGHT OUTSIDE)

ISSUE SLIP STAPLE AREA (for additional cross references)

POSITION	INITIALS	ID NO.	DATE
FEE DETERMINATION			
O.I.P.E. CLASSIFIER		8	5/16/01
FORMALITY REVIEW	BZ	697	05-24-01
RESPONSE FORMALITY REVIEW	SC	697 1077	5/18/01 6/25/01

Best Available Copy

INDEX OF CLAIMS

✔	Rejected	N	Non-elected
=	Allowed	I	Interference
—	(Through numeral)... Canceled	A	Appeal
÷	Restricted	O	Objected

Claim Final	Claim Original	Date
	1	
	2	
	3	
	4	
	5	
	6	
	7	
	8	
	9	
	10	
	11	
	12	
	13	
	14	
	15	
	16	
	17	
	18	
	19	
	20	
	21	
	22	
	23	
	24	
	25	
	26	
	27	
	28	
	29	
	30	
	31	
	32	
	33	
	34	
	35	
	36	
	37	
	38	
	39	
	40	
	41	
	42	
	43	
	44	
	45	
	46	
	47	
	48	
	49	
	50	

Claim Final	Claim Original	Date
	51	
	52	
	53	
	54	
	55	
	56	
	57	
	58	
	59	
	60	
	61	
	62	
	63	
	64	
	65	
	66	
	67	
	68	
	69	
	70	
	71	
	72	
	73	
	74	
	75	
	76	
	77	
	78	
	79	
	80	
	81	
	82	
	83	
	84	
	85	
	86	
	87	
	88	
	89	
	90	
	91	
	92	
	93	
	94	
	95	
	96	
	97	
	98	
	99	
	100	

Claim Final	Claim Original	Date
	101	
	102	
	103	
	104	
	105	
	106	
	107	
	108	
	109	
	110	
	111	
	112	
	113	
	114	
	115	
	116	
	117	
	118	
	119	
	120	
	121	
	122	
	123	
	124	
	125	
	126	
	127	
	128	
	129	
	130	
	131	
	132	
	133	
	134	
	135	
	136	
	137	
	138	
	139	
	140	
	141	
	142	
	143	
	144	
	145	
	146	
	147	
	148	
	149	
	150	

If more than 150 claims or 10 actions staple additional sheet here

(LEFT INSIDE)

02-02-01

A

JC965 U.S. PTO 02/01/01

CERTIFICATE OF MAILING BY "EXPRESS MAIL" UNDER 37 CFR § 1.10

"Express Mail" mailing label number: EJ058152044US

Date of Mailing: 2-1-01

I hereby certify that the documents indicated below are being deposited with the United States Postal Service under 37 CFR 1.10 on the date indicated above and are addressed to Box Patent Application, Assistant Commissioner for Patents, Washington, D.C. 20231, and mailed on the above Date of Mailing with the above "Express Mail" mailing label number.

Toni Stanley — Toni Stanley

(Typed or printed name of person mailing paper or fee) — SIGNATURE of person mailing paper or fee

J1033 U.S. PTO 09/775018 02/01/01

BOX PATENT APPLICATION
ASSISTANT COMMISSIONER FOR PATENTS
WASHINGTON, D. C. 20231

DOCKET NUMBER: 16312-P005US

Sir:

Transmitted herewith for filing is the Patent Application of:

Inventor: Eric G. Suder et al.

For: QUALITY OF SERVICE IN A VOICE OVER IP TELEPHONE SYSTEM

Enclosed are:

- ☒ Patent Specification
- ☒ 13 sheets of drawing(s)
- ☐ An assignment of the invention to Estech Systems, Inc. (includes Recordation Form Cover Sheet).
- ☐ A certified copy of a __ application.
- ☐ An associate power of attorney
- ☒ Information Disclosure Statement, PTO 1449 and copies of references.
- ☒ Applicant claims small entity status (37 C.F.R. 1.27).
- ☒ Request Not to Publish (35 U.S.C. 122(b)(2)(B)(i)

The filing fee has been calculated as shown below:

For	Number Filed	Number Extra	Rate Small Entity	Fee Small Entity
Basic Fee				$ 355.00
Total Claims	77 - 20	57	x 9=	$ 513.00
Indep. Claims	5 - 3	2	x 40	$ 80.00
☐ MULTIPLE DEPENDENT CLAIM(S) PRESENTED			+ 135 =	$ - 0 -
			TOTAL	$ 948.00

- ☒ A check in the amount of $ 948.00 is enclosed for the filing fee.
- ☒ The Assistant Commissioner is hereby authorized to charge payment of the following fees associated with this communication or credit any overpayment to Deposit Account No. 23-2426 (16312-P005US). **A duplicate copy of this sheet is enclosed.**
  - ☒ Any additional filing fees required under 37 CFR §1.16
  - ☒ Any patent application processing fees under 37 CFR §1.17.

Respectfully submitted,

By: _____

Kelly K. Kordzik
Registration No. 36,571
Winstead Sechrest & Minick P.C.
100 Congress Avenue
Suite 800
Austin, Texas 78701
(512) 370-2851

::ODMA\PCDOCS\AUSTIN_1\157648\1
207:16312-P005US

PTO/SB/35 (11-00)
Approved for use through 10/31/2002. OMB 0651-0031
U.S.. Patent and Trademark Office; U.S. DEPARTMENT OF COMMERCE
Under the Paperwork Reduction Act of 1995, no persons are required to respond to a collection of information unless it displays a valid OMB control number.

REQUEST AND CERTIFICATION UNDER 35 U.S.C. 122 (b)(2)(B)(i)		
	First Named Inventor	Eric G. Suder et al.
	Title	QUALITY OF SERVICE IN A VOICE OVER IP TELEPHONE SYSTEM
	Atty Docket Number	16312-P005US

I hereby certify that the invention disclosed in the attached application **has not and will not be** the subject of an application filed in another country, or under a multilateral agreement, that requires publication at eighteen months after filing. I hereby request that the attached application not be published under 35 U.S.C. 122(b).

2/1/01
Date

Signature

Kelly K. Kordzik
Reg. No. 36,571

Typed or printed name

This request must be signed in compliance with 37 CFR 1.33(b) and submitted with the application **upon filing.**

Applicant may rescind this nonpublication request at any time. If applicant rescinds a request that an application not be published under 35 U.S.C. 122(b), the application will be scheduled for publication at eighteen months from the earliest claimed filing date for which a benefit is claimed.

If applicant subsequently files an application directed to the invention disclosed in the attached application in another country, or under a multilateral international agreement, that requires publication of applications eighteen months after filing, the applicant **must** notify the United States Patent and Trademark Office of such filing within forty-five (45) days after the date of the filing of such foreign or international application. **Failure to do so will result in abandonment of this application (35 U.S.C. 122(b)(2)(B)(iii)).**

Burden Hour Statement: This collection of information is required by 37 CFR 1.213(a). The information is used by the public to requires that an application not be published under 35 U.S.C. 122(b) (and the PTO to process that request). Confidentiality is governed by 35 U.S.C. 122 and 37 CFR 1.14. This form is estimated to take 6 minutes to complete. This time will vary depending upon the needs of the individual case. Any comments on the amount of time you are required to complete this form should be sent to the Chief Information Officer, U.S. Patent and Trademark Office, Washington, DC 20231. DO NOT SEND FEES OR COMPLETED FORMS TO THIS ADDRESS. SEND TO: Assistant Commissioner for Patents, Washington, DC 20231.

PTO/SB/35 (11/00)

02-02-01

A

Jc965 U.S. PTO
10/01/20

CERTIFICATE OF MAILING BY "EXPRESS MAIL" UNDER 37 CFR § 1.10

"Express Mail" mailing label number: EJ058152044US

Date of Mailing: 2-1-01

I hereby certify that the documents indicated below are being deposited with the United States Postal Service under 37 CFR 1.10 on the date indicated above and are addressed to Box Patent Application, Assistant Commissioner for Patents, Washington, D.C. 20231, and mailed on the above Date of Mailing with the above "Express Mail" mailing label number.

Toni Stanley
(Typed or printed name of person mailing paper or fee)

Toni Stanley
SIGNATURE of person mailing paper or fee

J1033 U.S. PTO
09/775018
02/01/01

BOX PATENT APPLICATION
ASSISTANT COMMISSIONER FOR PATENTS
WASHINGTON, D. C. 20231

DOCKET NUMBER: 16312-P005US

Sir:

Transmitted herewith for filing is the Patent Application of:

Inventor: Eric G. Suder et al.

For: QUALITY OF SERVICE IN A VOICE OVER IP TELEPHONE SYSTEM

Enclosed are:

- ☒ Patent Specification
- ☒ 13 sheets of drawing(s)
- ☐ An assignment of the invention to Estech Systems, Inc. (includes Recordation Form Cover Sheet).
- ☐ A certified copy of a __ application.
- ☐ An associate power of attorney
- ☒ Information Disclosure Statement, PTO 1449 and copies of references.
- ☒ Applicant claims small entity status (37 C.F.R. 1.27).
- ☒ Request Not to Publish (35 U.S.C. 122(b)(2)(B)(i)

The filing fee has been calculated as shown below:

For	Number Filed		Number Extra	Rate Small Entity	Fee Small Entity
Basic Fee					$ 355.00
Total Claims	77	- 20	57	x 9=	$ 513.00
Indep. Claims	5	- 3	2	x 40	$ 80.00
☐ MULTIPLE DEPENDENT CLAIM(S) PRESENTED				+ 135 =	$ - 0 -
				TOTAL	$ 948.00

- ☒ A check in the amount of $ 948.00 is enclosed for the filing fee.
- ☒ The Assistant Commissioner is hereby authorized to charge payment of the following fees associated with this communication or credit any overpayment to Deposit Account No. 23-2426 (16312-P005US). **A duplicate copy of this sheet is enclosed.**
  - ☒ Any additional filing fees required under 37 CFR §1.16
  - ☒ Any patent application processing fees under 37 CFR §1.17.

Respectfully submitted,

By: _____

Kelly K. Kordzik
Registration No. 36,571
Winstead Sechrest & Minick P.C.
100 Congress Avenue
Suite 800
Austin, Texas 78701
(512) 370-2851

::ODMA\PCDOCS\AUSTIN_1\157648\1
207:16312-P005US

PTO/SB/35 (11-00)
Approved for use through 10/31/2002. OMB 0651-0031
U.S.. Patent and Trademark Office; U.S. DEPARTMENT OF COMMERCE
Under the Paperwork Reduction Act of 1995, no persons are required to respond to a collection of information unless it displays a valid OMB control number.

REQUEST AND CERTIFICATION UNDER 35 U.S.C. 122 (b)(2)(B)(i)		
	First Named Inventor	Eric G. Suder et al.
	Title	QUALITY OF SERVICE IN A VOICE OVER IP TELEPHONE SYSTEM
	Atty Docket Number	16312-P005US

I hereby certify that the invention disclosed in the attached application **has not and will not be** the subject of an application filed in another country, or under a multilateral agreement, that requires publication at eighteen months after filing. I hereby request that the attached application not be published under 35 U.S.C. 122(b).

2/1/01
Date

Signature

Kelly K. Kordzik
Reg. No. 36,571

Typed or printed name

This request must be signed in compliance with 37 CFR 1.33(b) and submitted with the application **upon filing.**

Applicant may rescind this nonpublication request at any time. If applicant rescinds a request that an application not be published under 35 U.S.C. 122(b), the application will be scheduled for publication at eighteen months from the earliest claimed filing date for which a benefit is claimed.

If applicant subsequently files an application directed to the invention disclosed in the attached application in another country, or under a multilateral international agreement, that requires publication of applications eighteen months after filing, the applicant **must** notify the United States Patent and Trademark Office of such filing within forty-five (45) days after the date of the filing of such foreign or international application. **Failure to do so will result in abandonment of this application (35 U.S.C. 122(b)(2)(B)(iii)).**

Burden Hour Statement: This collection of information is required by 37 CFR 1.213(a). The information is used by the public to requires that an application not be published under 35 U.S.C. 122(b) (and the PTO to process that request). Confidentiality is governed by 35 U.S.C. 122 and 37 CFR 1.14. This form is estimated to take 6 minutes to complete. This time will vary depending upon the needs of the individual case. Any comments on the amount of time you are required to complete this form should be sent to the Chief Information Officer, U.S. Patent and Trademark Office, Washington, DC 20231. DO NOT SEND FEES OR COMPLETED FORMS TO THIS ADDRESS. SEND TO: Assistant Commissioner for Patents, Washington, DC 20231.

PTO/SB/35 (11/00)

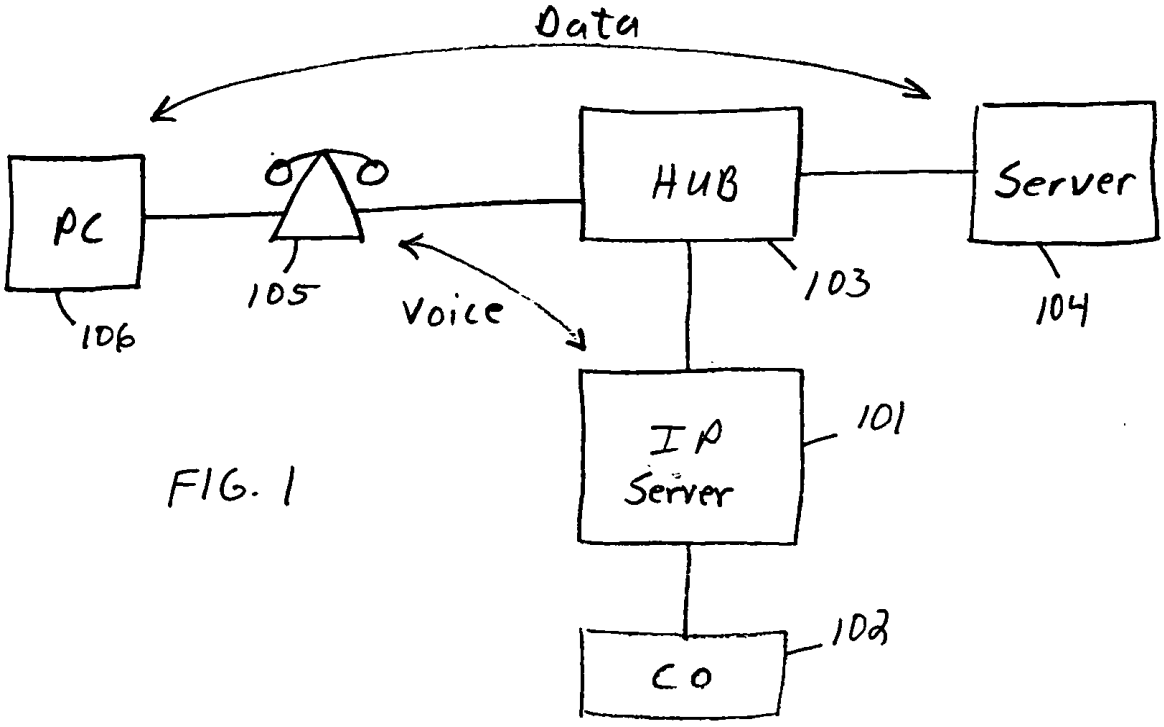
Data
PC
HUB
Server
105
Voice
103
104
106
IP
Server
101
102
CO

FIG. 1

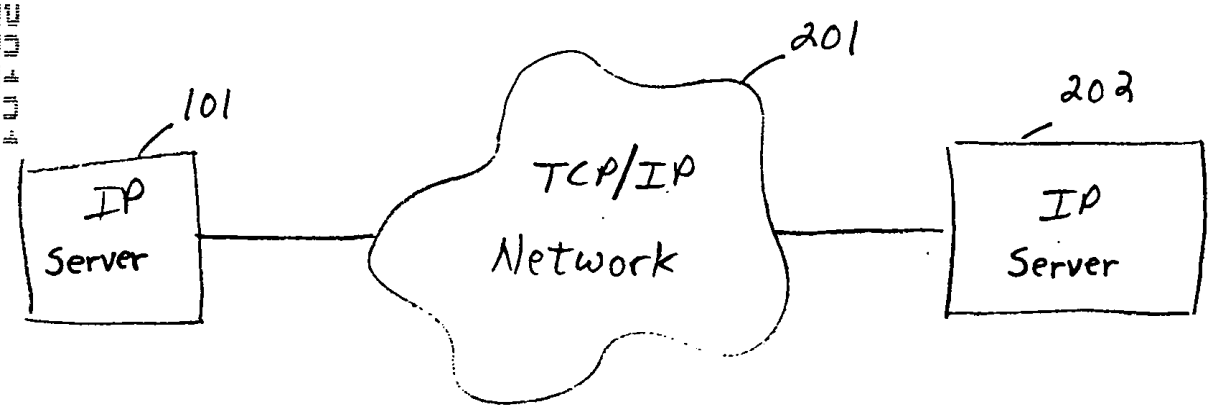
201
101
202
IP
Server
TCP/IP
Network
IP
Server

FIG. 2

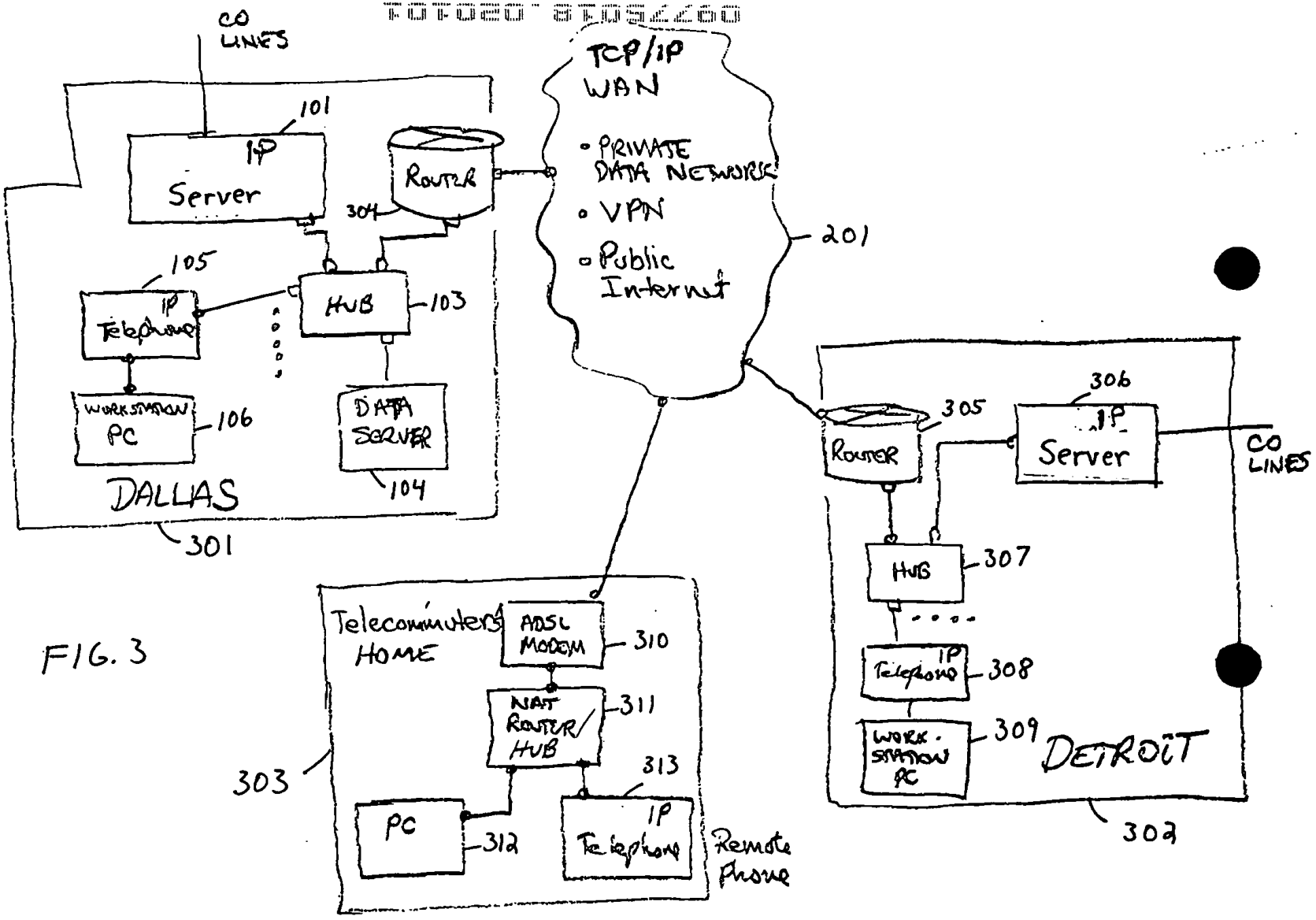
CO LINES
101
IP Server
ROUTER
304
TCP/IP WAN
• PRIVATE DATA NETWORKS
• VPN
• Public Internet
201
105
IP Telephone
HUB
103
WORKSTATION PC
106
DATA SERVER
104
DALLAS
301
306
305
ROUTER
IP Server
CO LINES
HUB
307
IP Telephone
308
WORK-STATION PC
309
DETROIT
302
Telecommuters HOME
ADSL MODEM
310
NAT ROUTER/ HUB
311
313
303
PC
312
IP Telephone
Remote Phone

FIG. 3

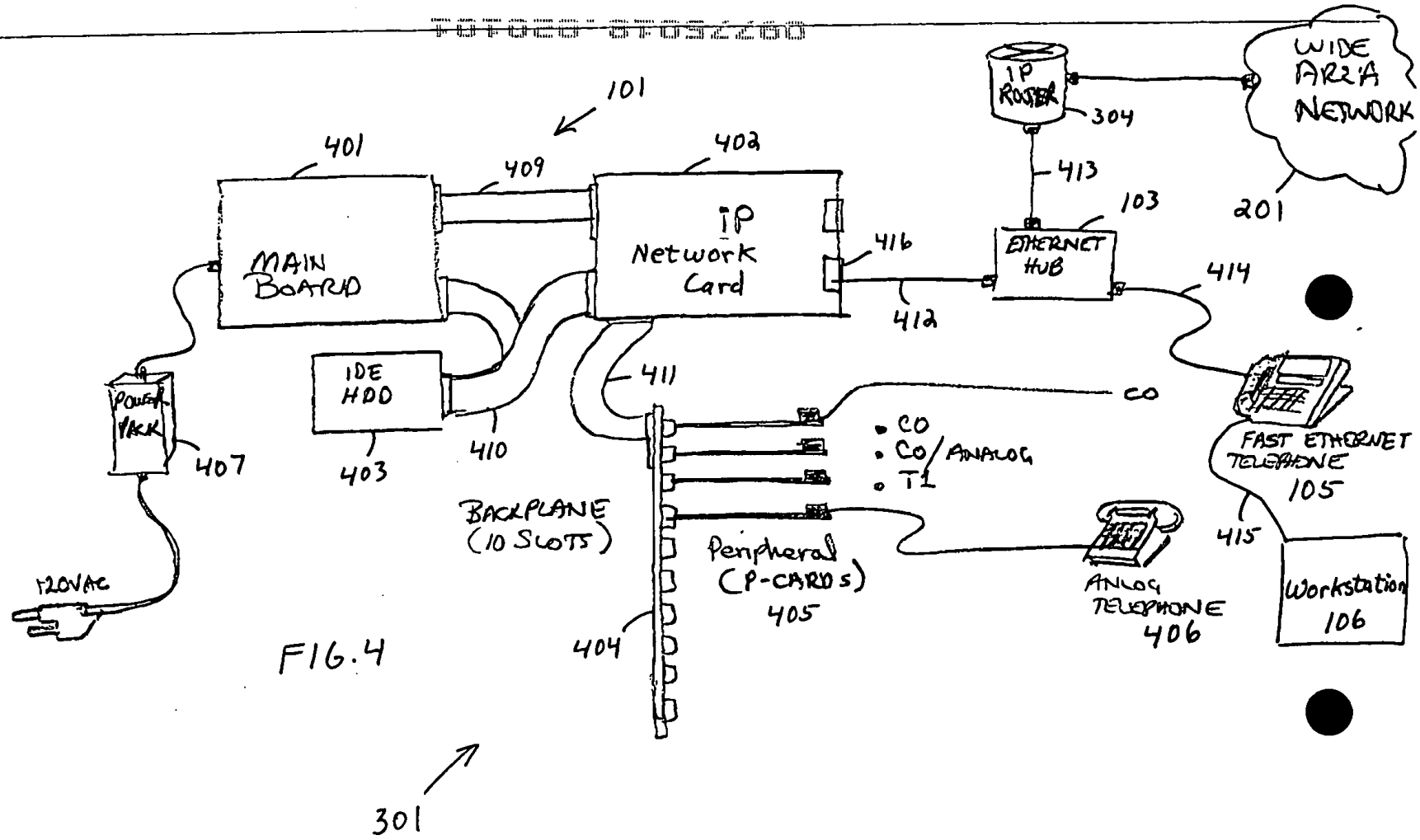
101
401
402
409
MAIN BOARD
IP Network Card
IP ROUTER
304
WIDE AREA NETWORK
201
413
103
ETHERNET HUB
416
414
412
411
IDE HDD
403
410
POWER PACK
407
120VAC
BACKPLANE (10 SLOTS)
CO
CO
CO/ANALOG
T1
Peripheral (P-CARDS)
405
404
FAST ETHERNET TELEPHONE
105
415
ANLOG TELEPHONE
406
Workstation
106
301

FIG. 4

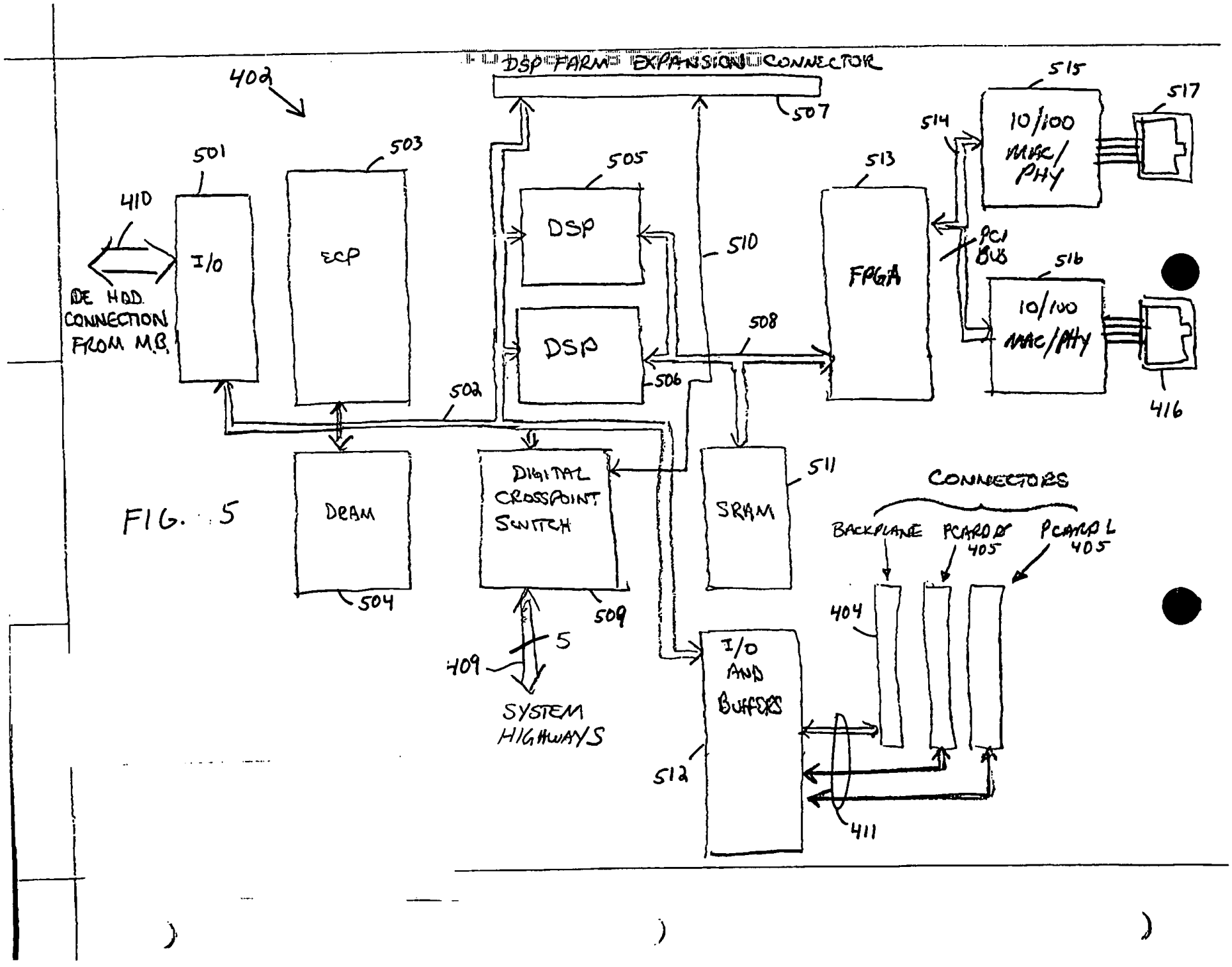

FIG. 5

CISCO EXHIBIT 1004
Page 78 of 345

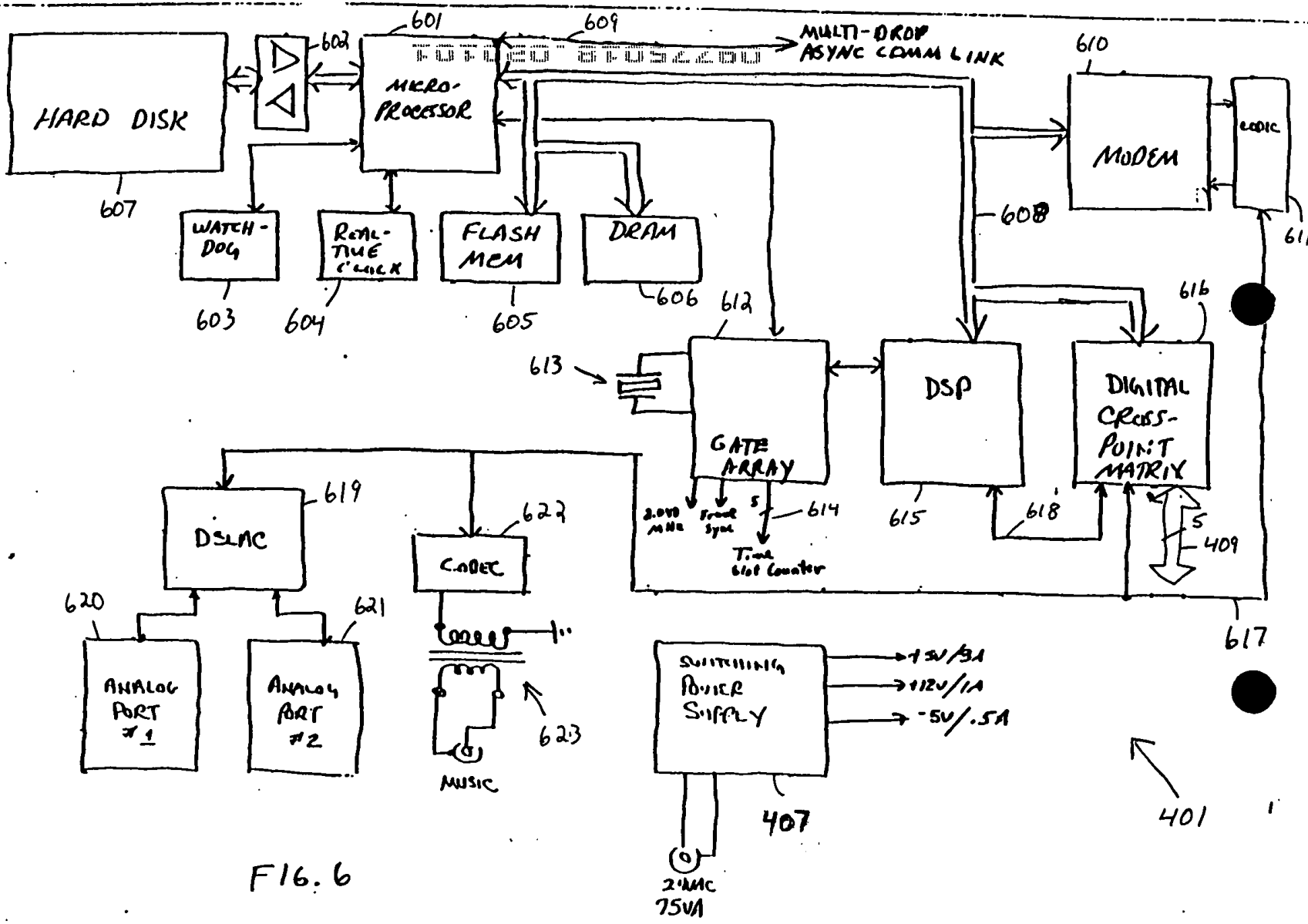

F16.6

CISCO EXHIBIT 1004
Page 79 of 345

CO
ANALOG PHONES 406
405
LOOP START CO INTERFACES
ANALOG TELEPHONE Interfaces
708
709
CODECS
706
CODECS
707
TDM
702
DSP
705
DIGITAL CROSSPOINT SWITCH
TDM
411
SYSTEM SPEECH/ CONTROL HIGHWAYS TO/FROM CARD 402
BUSSES
TIMING
701
MICROCONTROLLER (ECP)
512KB DRAM
703
704
BUFFERS
SYSTEM TIMING FROM CARD 402

FIG. 7

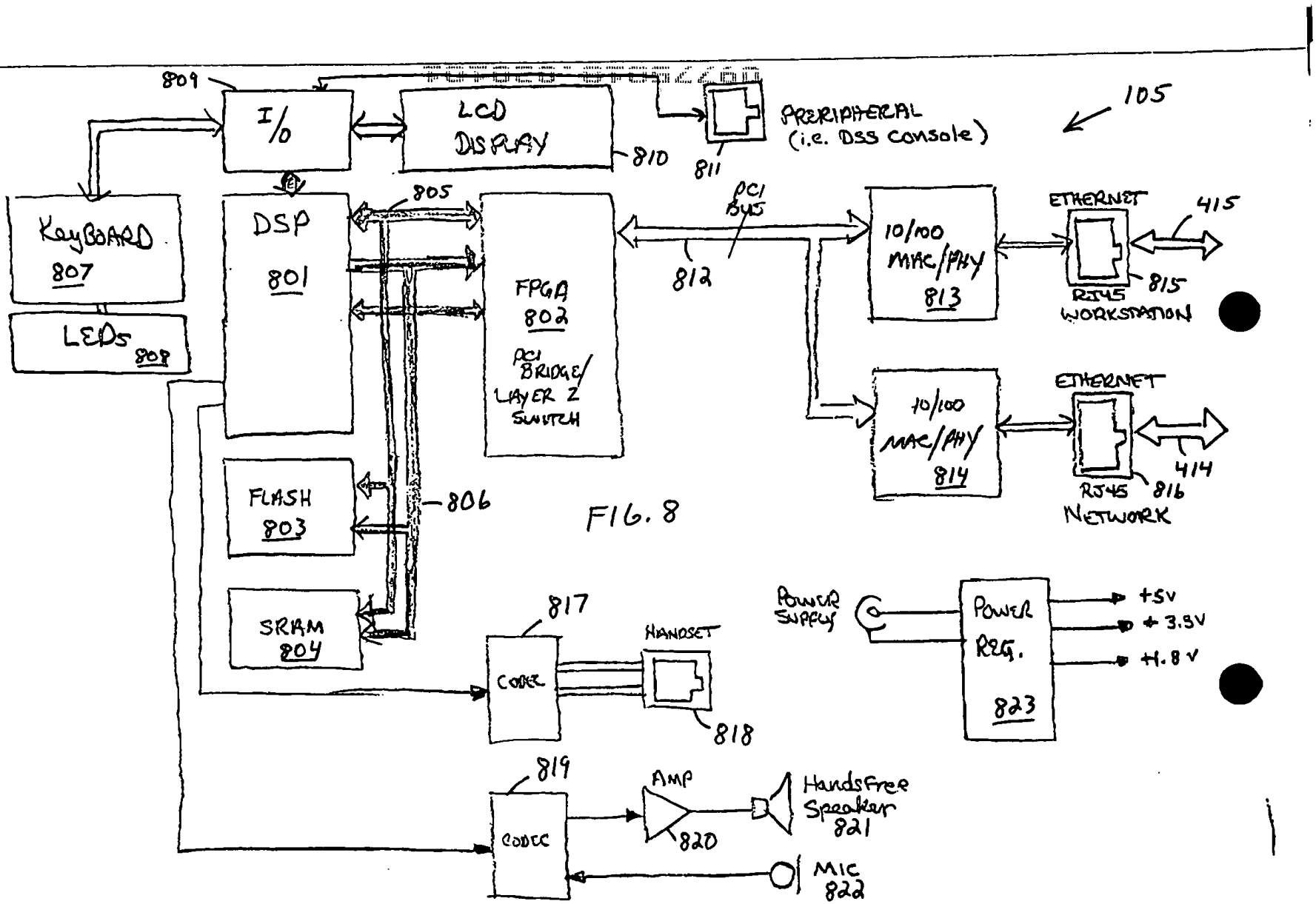
809
I/O
LCD DISPLAY
810
811
PERIPHERAL (i.e. DSS console)
105
KEYBOARD 807
LEDs 808
DSP 801
805
FPGA 802
PCI BRIDGE/ LAYER 2 SWITCH
PCI BUS
812
10/100 MAC/PHY 813
ETHERNET
415
RJ45 815
WORKSTATION
10/100 MAC/PHY 814
ETHERNET
414
RJ45 816
NETWORK
FLASH 803
806
SRAM 804
817
CODEC
HANDSET
818
POWER SUPPLY
POWER REG. 823
+5V
+3.3V
+1.8V
819
CODEC
AMP
820
Handsfree Speaker 821
MIC 822

FIG. 8

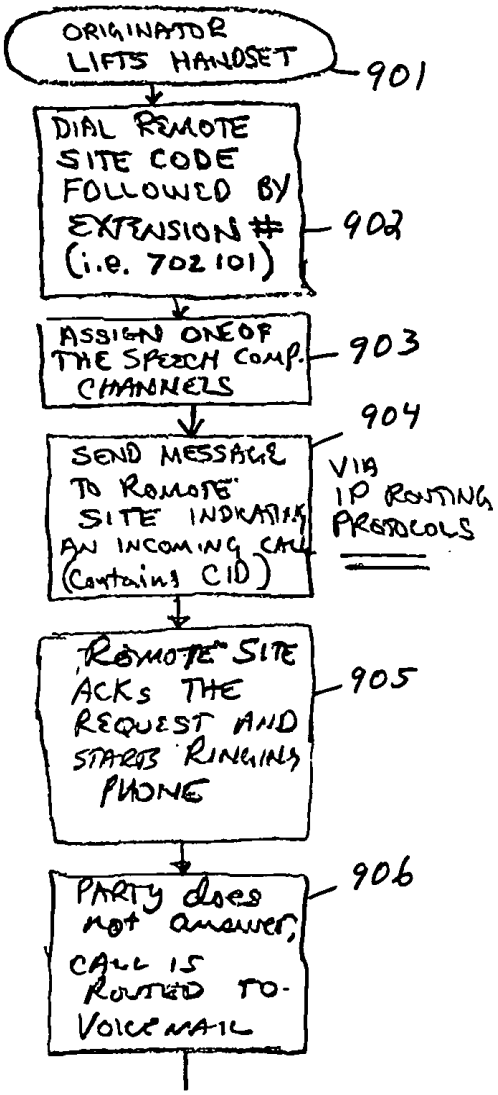
ORIGINATOR LIFTS HANDSET
901
DIAL REMOTE SITE CODE FOLLOWED BY EXTENSION # (i.e. 702101)
902
ASSIGN ONE OF THE SPEECH COMP. CHANNELS
903
SEND MESSAGE TO REMOTE SITE INDICATING AN INCOMING CALL (Containing CID)
904
VIA IP ROUTING PROTOCOLS
REMOTE SITE ACKS THE REQUEST AND STARTS RINGING PHONE
905
PARTY does not answer, CALL IS ROUTED TO VOICE MAIL
906

FIG. 9

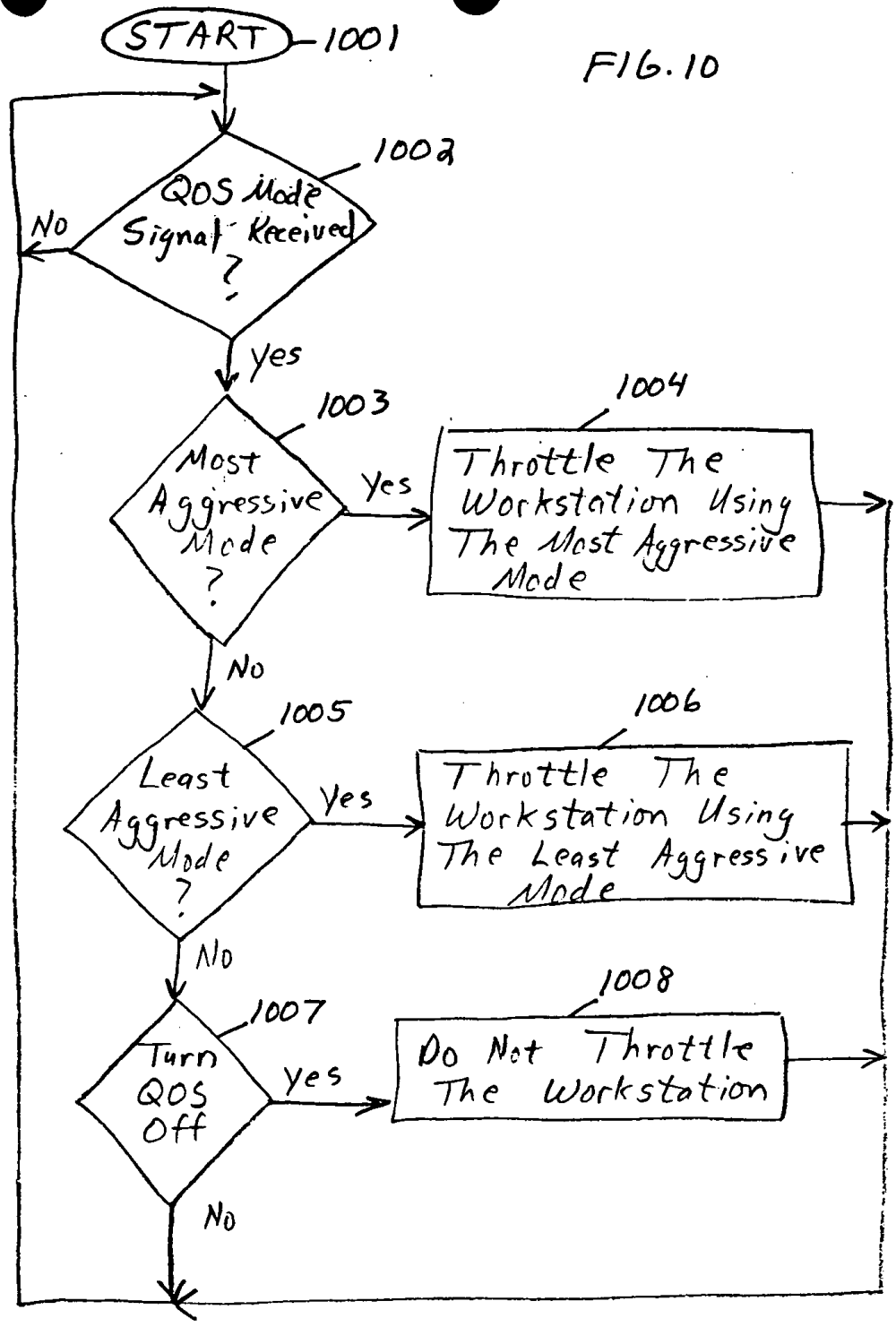

FIG. 10

EXHIBIT 1004 - PAGE 83 OF 345

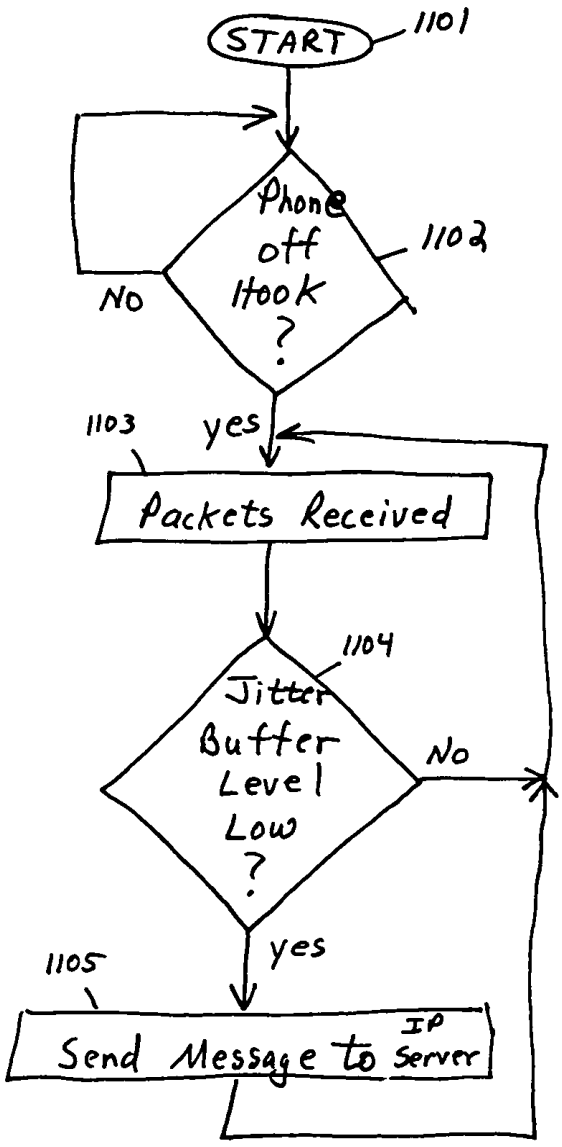
START
1101
Phone off Hook ?
1102
No
yes
1103
Packets Received
1104
Jitter Buffer Level Low ?
No
yes
1105
Send Message to IP Server

FIG. 11

FIG. 12A

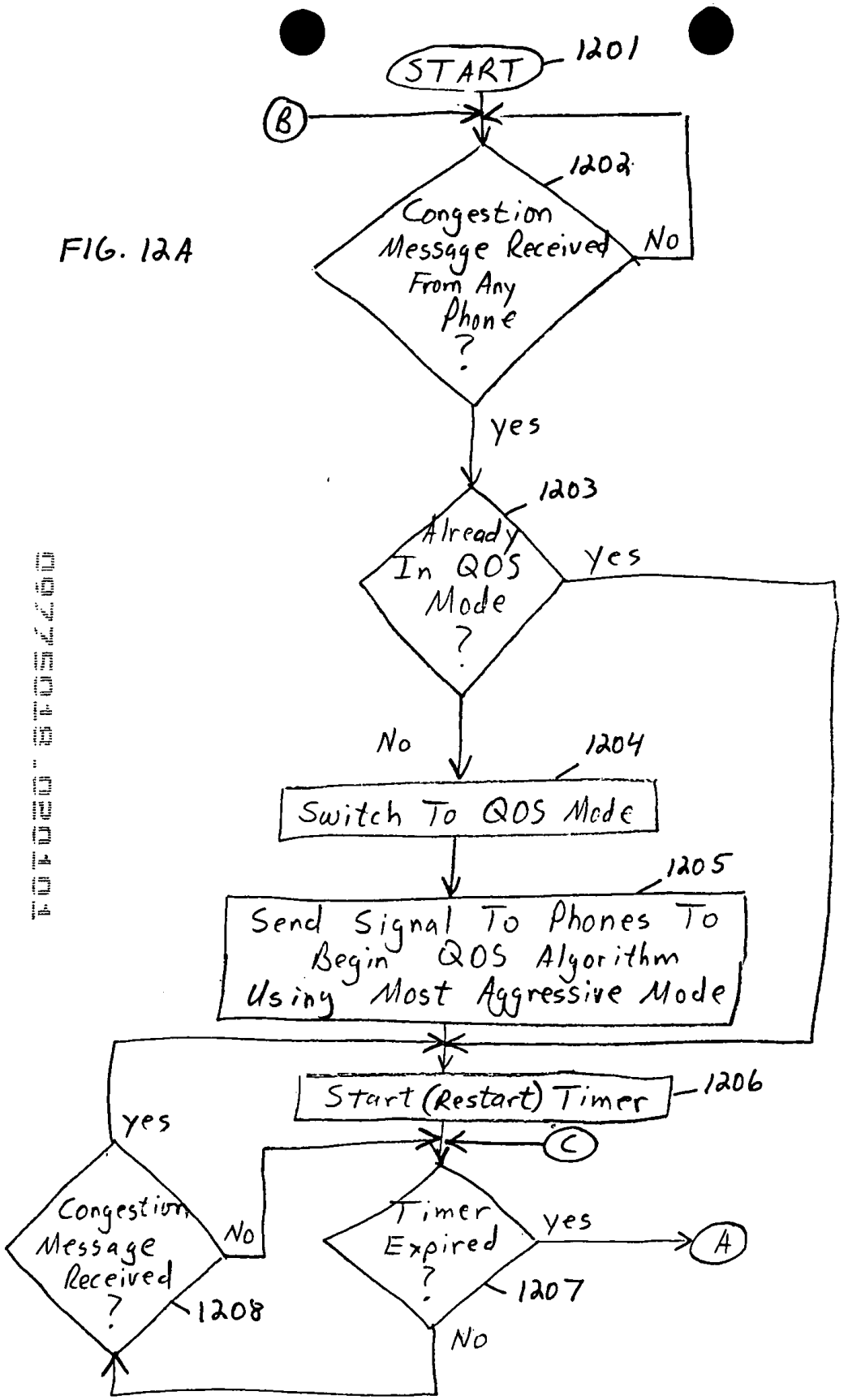

EXHIBIT 1004 - PAGE 85 OF 345

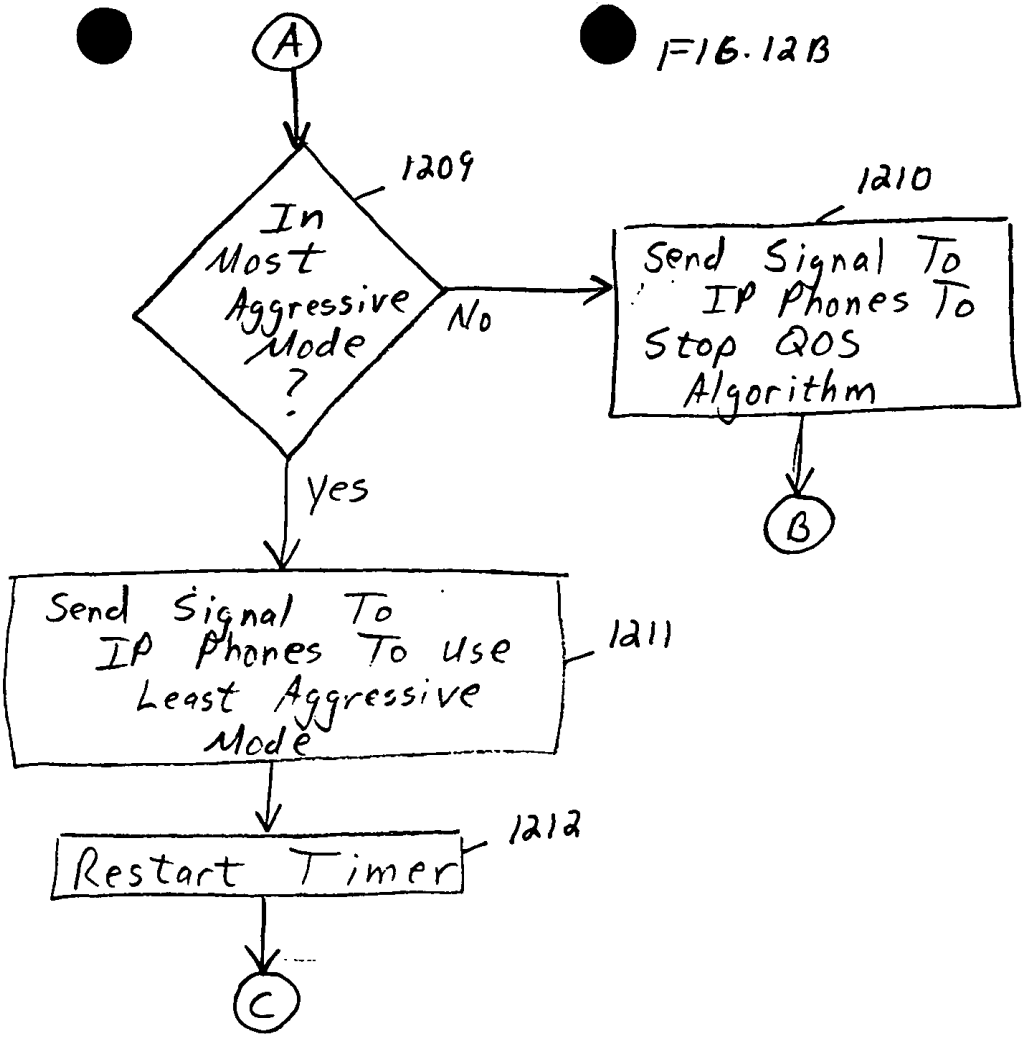
A
1209
In Most Aggressive Mode ?
No
1210
Send Signal To IP Phones To Stop QOS Algorithm
B
yes
Send Signal To IP Phones To use Least Aggressive Mode
1211
Restart Timer
1212
C

FIG. 12B

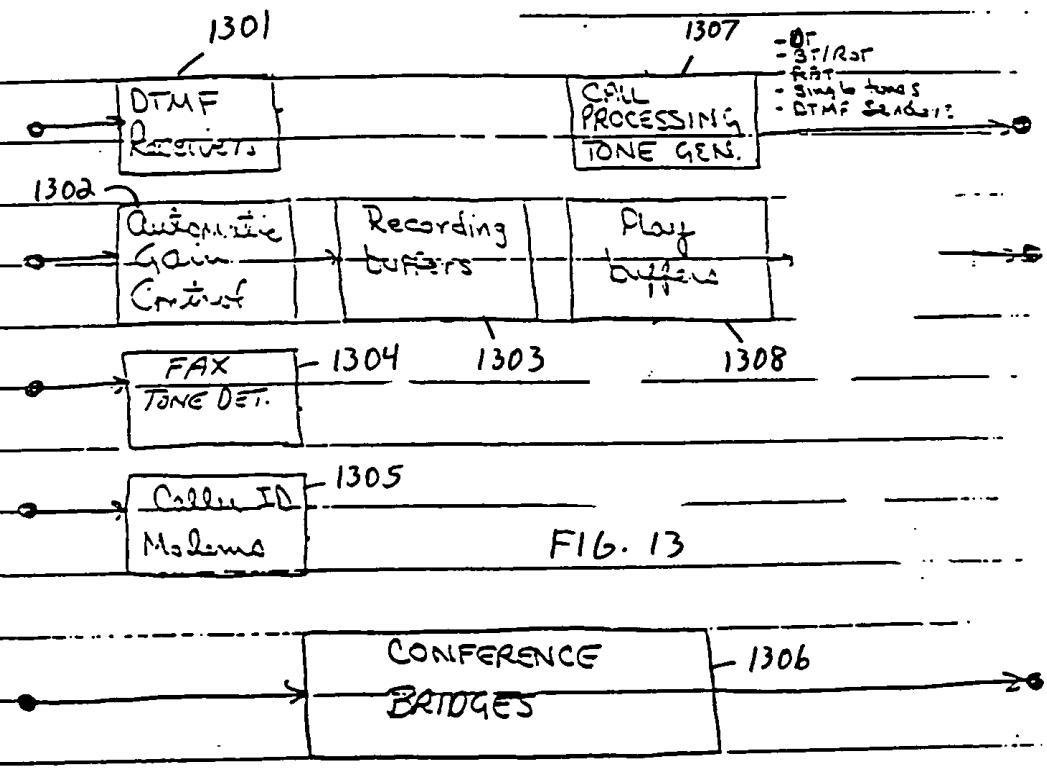
1301
DTMF Receivers
1307
CALL PROCESSING
TONE GEN.
- DT
- BT/RDT
- RBT
- Single tones
- DTMF Senders
1302
Automatic Gain Control
Recording buffers
Play buffers
1303
1308
FAX TONE DET.
1304
Caller ID Modems
1305
CONFERENCE BRIDGES
1306

FIG. 13

16312-P005US

QUALITY OF SERVICE IN A VOICE OVER IP TELEPHONE SYSTEM

TECHNICAL FIELD

The present invention relates in general to information processing systems, and in particular, to the use of Voice over IP technology to transmit voice conversations.

BACKGROUND INFORMATION

Voice over IP ("VoIP") is a relatively recent development that is utilized to transmit voice conversations over a data network using the Internet Protocol ("IP"). Internet Protocol is a part of the TCP/IP family of protocols described in software that tracks the Internet address of nodes, routes outgoing messages, and recognizes incoming messages. Such a data network may be the Internet or a corporate intranet, or any TCP/IP network. There are several potential benefits for moving voice over a data network using IP. First, there is a savings in money compared to the need to use traditional tolled telecommunications networks. Additionally, Voice over IP enables the management of voice and data over a single network. And, with the use of IP phones, moves, adds and changes are easier and less expensive to implement. Moreover, additional and integrated new services, including integrated messaging, bandwidth on demand, voice e-mails, the development of "voice portals" on the Web, simplified setting up and tearing down, and transferring of phone calls are capable.

Using Voice over IP technology, phone systems can communicate with each other over existing TCP/IP data networks typically present between remote offices.

CISCO EXHIBIT 1004
Page 88 of 345

This feature alone can eliminate the need for expensive, dedicated circuits between facilities. The shared bandwidth can also be used for voice calls and data communication simultaneously; no bandwidth is dedicated to one or the other.

Another advantage of a Voice over IP system is the ability to implement a phone system over an existing data network that is already connecting workstations within a local area network, such as over an Ethernet. An Ethernet operates over twisted wire and over coaxial cable for connecting computers, printers, workstations, terminals, servers, etc., within the same building or a campus. The Ethernet utilizes frame packets for transmitting information. Voice over IP can utilize such packet switching capabilities to connect IP phones onto the Ethernet. However, the implementation of Voice over IP onto an Ethernet has proven to have some difficulties. Data networks were originally designed to allow for latency (delays) in the delivery of packets between sources and destinations. If a packet became lost, then the Ethernet would go through a re-send protocol to have the packet sent again from the source to the destination, and the data then reassembled at the destination end. With voice (or for that matter, video or any other real-time application), such delays present problems. Real-time applications cannot tolerate significant delays or they no longer become real-time applications. Such quality of service ("QOS") concerns are especially amplified when attempting to implement Voice over IP onto an Ethernet, which utilizes a 10/100 Base T protocol, since it can be affected by bursts of data transfers among the workstations and servers, etc. For example, a large print job or a file access can significantly occupy the bandwidth on such an Ethernet, thus greatly degrading the ability to transmit any real-time information during that data

burst. This problem worsens as more and more Voice over IP telephones are added to the network.

Therefore, there is a need in the art for an improved information processing system that can handle multimedia traffic in conjunction with typical bursty data transmissions.

SUMMARY OF THE INVENTION

The present invention addresses the foregoing need by providing an information processing system whereby an IP telephony system is designed to share a network with data devices communicating with a network operating system. In one embodiment, the network is an Ethernet local area network. Because these systems share a common hardware media, there is a possibility to saturate the network. Multimedia traffic can be adversely affected by jitter and latency, while data traffic is typically immune to these types of disruptions. This bandwidth contention requires a suitable quality of service arrangement to give the multimedia traffic priority during peak traffic loads.

More specifically, an IP telephony device will contain two separate media access controllers ("MACs") configured to provide a two-port, layer 2 Ethernet switch. This approach permits one MAC to be connected to the network, while the other MAC is dedicated to a connected network device. This allows all traffic flowing between MACs to be manipulated by a hardware/software approach within the IP telephony device. The quality of service algorithm of the present invention uses this configuration to restrict data traffic to/from the network device during peak traffic conditions, thus providing increased multimedia traffic bandwidth when needed.

In one embodiment of the present invention, voice jitter buffers within each IP telephony device are used to minimize the effects of jitter and latency by providing a buffer of three voice packets. If the bandwidth usage of the Ethernet link becomes too great, the jitter buffer will start to deplete. The IP telephony device will detect this

CISCO EXHIBIT 1004
Page 91 of 345

condition and report it to a quality of service task running within a multimedia server coupled to the Ethernet.

If any of the IP telephony devices report to the multimedia server that their jitter buffers have hit a specified threshold, the multimedia server will issue a command to all (or selected) IP telephony devices simultaneously to begin a flow control process between their respective network devices and the network. If, after a programmable interval, the multimedia server ceases receiving quality of service messages from the IP telephony devices, the multimedia server will issue a command to stop the flow control process.

In an embodiment of the present invention, the command that the multimedia server issues to instruct the IP telephony devices to start the flow control process will contain a parameter used to signify how aggressively the IP telephony devices should flow control their respective data paths. For example, the multimedia server would first send the most aggressive value. Once the quality of service messages cease from the IP telephony devices, the multimedia server would then send a next lower aggressive parameter value. If no quality of service messages are received, the multimedia server will turn off the quality of service algorithm. If, however, during any stage if the quality of service messages are received from the IP telephony devices, the multimedia server will reissue the next higher flow control value.

In one embodiment of the present invention, during the quality of service flow control processes, the IP telephony devices may flood the private network between the IP telephony devices and the network devices with idle patterns (jabber). The various levels of flow control needed could be achieved by a jabber duty cycle. For example, a most aggressive value may have an eighty percent duty cycle, while a least

CISCO EXHIBIT 1004
Page 92 of 345

aggressive value may have a twenty percent duty cycle. During the jabber process, communication between the network device and server is disrupted, allowing more bandwidth for the voice packets between the IP telephony devices and the multimedia server.

The foregoing has outlined rather broadly the features and technical advantages of the present invention in order that the detailed description of the invention that follows may be better understood. Additional features and advantages of the invention will be described hereinafter which form the subject of the claims of the invention.

CISCO EXHIBIT 1004
Page 93 of 345

BRIEF DESCRIPTION OF THE DRAWINGS

For a more complete understanding of the present invention, and the advantages thereof, reference is now made to the following descriptions taken in conjunction with the accompanying drawings, in which:

FIGURE 1 illustrates an information processing system configured in accordance with the present invention;

FIGURE 2 illustrates a wide area network configuration of the present invention;

FIGURE 3 illustrates another embodiment of a wide area network configuration of the present invention;

FIGURE 4 illustrates a block diagram of a configuration of the present invention;

FIGURE 5 illustrates a block diagram of a network card configured in accordance with the present invention;

FIGURE 6 illustrates a block diagram of the main board of the present invention;

FIGURE 7 illustrates a block diagram of a peripheral card configured in accordance with the present invention;

FIGURE 8 illustrates a block diagram of a telephony device configured in accordance with the present invention;

FIGURE 9 illustrates a flow diagram of a station-to-station telephone call;

FIGURES 10, 11, 12A and 12B illustrate flow diagrams configured in accordance with the present invention; and

CISCO EXHIBIT 1004
Page 94 of 345

FIGURE 13 illustrates functions implemented in the processing means of the main board.

DETAILED DESCRIPTION

In the following description, numerous specific details are set forth such as specific network configurations, network devices, types of multimedia traffic, etc. to provide a thorough understanding of the present invention. However, it will be obvious to those skilled in the art that the present invention may be practiced without such specific details. In other instances, well-known circuits have been shown in block diagram form in order not to obscure the present invention in unnecessary detail. For the most part, details concerning timing considerations and the like have been omitted in as much as such details are not necessary to obtain a complete understanding of the present invention and are within the skills of persons of ordinary skill in the relevant art.

Refer now to the drawings wherein depicted elements are not necessarily shown to scale and wherein like or similar elements are designated by the same reference numeral through the several views.

FIGURE 1 illustrates an information processing system configured in accordance with the present invention. FIGURE 1 essentially illustrates a local area network ("LAN"), which in one configuration could be implemented with an Ethernet protocol. However, the present invention is not limited to use with any particular data transfer protocol. Workstation PC 106, network hub 103 and server 104 coupled to each other illustrate a typical LAN configuration where data is communicated between the workstation 106 and the server 104. Naturally, other workstations and servers could also be coupled to the LAN through hub 103, including the use of additional hubs. Hub 103 may be a 10 Base T or 10/100 Base T Ethernet hub. In an

CISCO EXHIBIT 1004
Page 96 of 345

alternative embodiment, the hub 103 and server 104 may be implemented in the same data processing system. Herein, the term "workstation" can refer to any network device that can either receive data from a network, transmit data to a network, or both.

To add in the voice communication capabilities, an IP multimedia server 101 is coupled to hub 103 and an IP telephony device 105 is connected between the workstation 106 and the hub 103. The IP multimedia server 101 is coupled to a central office ("CO") 102 so that telephony device 105 can communicate to other telecommunications networks, such as the public switched telephone network ("PSTN"). Naturally, additional IP telephony device 105 can be coupled to hub 103, including having workstations coupled to hub 103 through such IP telephony devices. Further details on multimedia server 101 and IP telephony device 105 are described below. An IP telephone, or telephony device, is any apparatus, device, system, etc., that can communicate multimedia traffic using IP telephony technology. IP telephony is defined within Newton's Telecom Dictionary, Harry Newton, Sixteenth Edition, page 454, which is hereby incorporated by reference herein.

Information, or data, on the network includes both the voice and data information, and any other multimedia traffic. Traffic as a result of the data transmissions between workstation 106 and server 104 affects the bandwidth available for communications between telephony device 105 and multimedia server 101. However, as discussed above, because the multimedia traffic is real-time, it must be transferred with no or minimum latency. An embodiment of the present invention provides a protocol for ensuring that the multimedia data is transferred within a specified minimum or no latency by having the data information pass through the IP telephony device 105 as it is being transferred to/from workstation 106.

CISCO EXHIBIT 1004
Page 97 of 345

This configuration, as will be subsequently discussed in further detail, permits the IP telephony device 105 to throttle the data to/from workstation 106, effectively giving the IP telephony device 105 priority on the network.

FIGURE 2 illustrates how the information processing system of the present invention as noted above with respect to FIGURE 1 can be implemented across a wide area network ("WAN") 201 where the multimedia server 101 of FIGURE 1 is coupled to another multimedia server 202 across LAN 201. Note that the other items described above in FIGURE 1 have been omitted in FIGURE 2 for the sake of simplicity.

FIGURE 3 illustrates further detail of a configuration of the present invention over a WAN 201. Note that such a WAN may implement the TCP/IP protocol, and could be a public WAN, such as the Internet, a private data network, an intranet, or a Virtual Private Network ("VPN").

FIGURE 3 illustrates an exemplary system where WAN 201 couples an information processing system 301 in Dallas, Texas to another information processing system 302 in Detroit, Michigan, while also permitting a remote system 303 to couple to both systems 301 and 302 through WAN 201, such as from a telecommuter's home.

System 301 is similar to the system described above with respect to FIGURE 1. System 301 is coupled to WAN 201 through router 304.

System 302 is similar to system 301 with the exception that a data server is not implemented within system 302. Router 305 is similar to router 304, multimedia server 306 is similar to multimedia server 101, hub 307 is similar to hub 103, IP telephony device 308 is similar to IP telephony device 105, and workstation 309 is similar to workstation 106.

CISCO EXHIBIT 1004
Page 98 of 345

Remote system 303 is coupled to WAN 201 using a modem 310, such as an ADSL (asymmetric digital subscriber line) modem. A NAT (Network Address Translation) router/hub 311 then couples a workstation PC 312 and an IP telephony device 313 to the modem 310. Not only can data be transferred across WAN 201 between systems 301-303, but also any one of telephony devices 105, 308 and 313 can communicate with each other and with the PSTN (not shown) over CO lines coupled to either of systems 301 and 302.

FIGURE 4 illustrates further details of system 301. As noted above, system 301 is coupled to WAN 201 through IP router 304, which is coupled by line 413 to Ethernet hub 103. Ethernet hub 103 is connected by line 414 to fast Ethernet telephony device 105, which is coupled by line 415 to workstation 106. Ethernet hub 103 is coupled to IP network card 402 by connection 416, which may be a 10/100 Base T connector.

Multimedia server 101 is comprised of main board 401, network card 402, hard drive 403, backplane 404 and peripheral cards 405. network card 402 is further discussed below in more detail with respect to FIGURE 5. network card 402 is coupled by ribbon cable 409 to main board 401, which is further described below in more detail with respect to FIGURE 6. multimedia server 101 is powered through power pack 407. IDE (Integrated Drive Electronics) HDD (hard disk drive) 403 is coupled by ribbon cable 410 to network card 402 and main board 401, while network card 402 is coupled to backplane 404 through ribbon cable 411. Backplane 404 provides capacity for several peripheral cards (P-cards) 405, which are of a typical configuration for enabling a telephone system to connect to a central office (CO), T1

CISCO EXHIBIT 1004
Page 99 of 345

lines, analog central office trunks and analog telephones 406. Alternatively, ribbon cable 411 could be coupled to one of the peripheral cards 405 directly.

Referring next to FIGURE 5, there is illustrated a block diagram of network card 402. Network card 402 is responsible for communicating with all IP telephones, remote telephones and remote sites via a 10/100 Base T connection. The higher-level communication protocol used may be a standard UDP/IP (User Datagram Protocol/Internet Protocol) protocol. In addition, network card 402 communicates with the main board 401 for overall system control. Network card 402 has effectively replaced individual electronic key telephone circuits with a single Ethernet interface, and network card 402 now acts as the central distribution point for all peripheral cards 405, which can plug into backplane 404.

Ribbon cable 410 from hard drive 403 is received at I/O 501 coupled to bus 502. Bus 502 is coupled to ECP (Enhanced Call Processing) microcontroller 503, DRAM 504, DSPs 505 and 506, DSP farm expansion connector 507, digital cross-point switch 509, and I/O and buffers 512. ECP 503 is a microcontroller responsible for overall communications between network card 402 and main board 401. ECP 503 directly interfaces the DSPs 505, 506 via the host port interface. The host port interface is a parallel (8 bit) interface between the DSPs and the host processor. This interface can be used to directly manipulate the DSP memory by a host processor. I/O 501 is a mailbox type parallel communication channel, which is multiplexed between communication with the IDE disk drive 403 and I/O 501 allowing direct control for functions such as firmware download and message passing. ECP 503 is based on a 16-bit Hitachi H8 family processor with built-in flash memory.

DSPs 505 and 506 can be implemented using Texas Instrument 5410 DSPs that perform packet encoding/decoding, jitter buffer management and UDP/IP protocol stacked functions. DSPs 505, 506 are connected to an external SRAM 511 and ASIC (FPGA) 513 that performs a PCI bridge function between bus 508 and bus 514, which is coupled to connectors 517 and 416 via 10/100 MAC/PHY devices 515 and 516. DSPs 505, 506 communicate with peripherals 405 via bus 502. DSP firmware is downloaded via the host port interface 501. I/O 501 allows communication with the main board 401 and the hard drive 403. Additionally, EPC 503 can directly control a daughter card containing additional DSPs through expansion connector 507 for functions such as speech compression.

Digital cross-point switch 509 is used to connect system voice conversations as needed between peripherals. Main board 401 houses the master cross-points with 616 discussed below with respect to FIGURE 6. The peripheral cards 405 share a pool of 160 time slots. Cross-point switch 509 is primarily responsible for connecting the packet-switched voice connections of the IP telephones or remote systems to the circuit switchboard. The FPGA/PCI bridge 513 performs the functions required to connect the 10/100 Base T Ethernet MAC/PHY devices 515, 516. Since devices 515, 516 are designed to communicate via a standard PCI bus 514, the FPGA 513 implements a minimal PCI bus implementation. In addition, the FPGA 513 implements I/O latches and buffers as required.

The 10/100 Base T devices 515, 516 are stand-alone Ethernet devices, which perform the media access control ("MAC") and the PHYsical layer functions in a single, low-cost chip. Devices 515, 516 communicate to the host processor via a standard PCI bus 514, and communicate to the network via a pulse transformer

CISCO EXHIBIT 1004
Page 101 of 345

coupled RJ-45 connection 517, 416. These devices contain FIFOs to minimize lost packets during traffic peaks. Per the PCI bus mastering specification, devices 515, 516 take control of the DSP bus and DMA data directly to SRAM 511. Conversely, the DSP 505, 506 writes data to be sent into the SRAM 511 and the devices 515, 516 DMA data via the PCI bus 514 to the network (LAN).

Referring next to FIGURE 6, there is illustrated, in block diagram form, main board 401 for integrating call processing and voice processing using a single processing means, which in this example is one microprocessor 601. Microprocessor 601, which may be a Motorola 68000 class microprocessor, communicates with hard disk 607 using driver circuitry 602. Hard disk 607 stores program data, voice prompts, voice mail messages, and all other types of speech used within main board 401.

Microprocessor 601 also includes watchdog timer 603 and real-time clock source 604.

Microprocessor 601 is coupled via bus 608 to flash memory 605 and dynamic random access memory ("DRAM") 606. Flash memory 605 is used to store bootstrap data for use during power up of main board 401. DRAM 606 stores the program accessed by microprocessor 601 during operation of main board 401.

Bus 608 also couples microprocessor 601 to signal processing circuitry, which in this example is digital signal processor ("DSP") 615. Digital signal processor 615 implements a number of functions traditionally implemented by discrete analog components.

Referring next to FIGURE 13, there are illustrated some of the primary functions implemented in DSP 615. DTMF receivers 1301 are implemented using

frequency domain filtering techniques. DTMF receivers 1301 detect all 16 standard DTMF (touch-tone) digits.

Automatic gain control ("AGC") 1302 is a closed-loop gain control system which normalizes received audio levels during recording.

Recording buffers 1303, which are coupled to AGC 1302, receive and store speech samples after they have passed through AGC block 1302. These speech samples are converted to μ-law PCM (Pulse Code Modulation) and double buffered (several samples per buffer). Microprocessor 601 copies the record data out of DSP buffers 1303 into RAM buffers (not shown), which are located in the microprocessor 601 data RAM area.

Fax tone detector 1304 is implemented using frequency domain filtering techniques. Fax tone detector 1304 detects the standard 1100 Hz FAX CNG tone (also referred to as the Calling Tone).

Caller ID modems 1305 are 1200 baud FSK modems similar to Bell 202-type modems. Caller ID modems 1305 are implemented as a frequency discriminator where a time delayed (quadrature) signal is multiplied by the original signal, low pass filtered, then sliced, which produce the square wave caller ID data stream.

Call processing tone generators 1307 are free running oscillators which generate the appropriate tones (and tone pairs) which make up the industry standard call processing tones. These tones include:

- dial tone
- busy/reorder tone
- ring back tone
- single frequency (440 Hz) tone

CISCO EXHIBIT 1004
Page 103 of 345

- DTMF dialer tones

Play buffers 1308 replay data from hard disk 607 through microprocessor 601 and place this play data in buffers 1308. This data is converted from an 8-bit μ-law PCM signal to 14-bit linear data.

Conference bridges 1306 allow multiple conference bridges to mix together conferees into a multi-party conference. These conferees may be a mixture of inside and outside parties. A combination of "loudest speaker" and "summing" is utilized.

DSP 615 communicates with microprocessor 601 via a host interface port ("HIP") via bus 608. The HIP link supports a command-based protocol, which is used to directly read or write DSP memory locations. DSP 615 is a RAM-based part and has its program downloaded from microprocessor 601. Once downloaded and running, microprocessor 601 (the host) polls for events or receives interrupts indicating that data is available. DSP 615 speech connections are made over an industry standard 32-time slot, 2.048 megabits per second (Mb/s) digital serial link 618. Link 618 occupies one of the digital highways implemented by digital cross-point matrix 616. Each service of DSP 615 occupies a single time slot. For example, DTMF receiver 1 occupies time slot 0 while conference bridge circuit 12 occupies time slot 31.

Digital cross-point matrix 616 is also coupled to bus 608 and operates to connect any voice path to any other voice path. Digital cross-point matrix 616 is a VLSI (Very Large Scale Integration) integrated circuit. An example of digital cross-point matrix 616 is manufactured by MITEL Semiconductor Corporation as part No. 8980. Digital cross-point matrix 616 communicates with microprocessor 601 via a memory mapped input/output (I/O) scheme. A command/control protocol is used

CISCO EXHIBIT 1004
Page 104 of 345

for communication between microprocessor 601 and digital cross-point matrix 616 via bus 608. Cross-point matrix 616 is coupled by highway 618 to DSP 615. Cross-point matrix 616 is coupled to highway 617.

Digital cross-point matrix 616 is capable of making 256 simultaneous fully non-blocking connections. However, it may be upgraded by adding additional DSPs and/or cross-point matrices.

Gate array 612 is an SRAM (Static Random Access Memory) based device. An example of gate array 612 is manufactured by XILINX. Gate array 612 is responsible for generating all system timing. A master clock signal is provided by microprocessor 601 at 16.384 MHz. This clock signal is divided down to provide a number of phase coherent system clocks such as 4.096 MHz, 2.048 MHz and 8 KHz (frame sync). In addition, a 5-bit time slot counter is implemented which allows all the system CODECs to detect the appropriate time slot to use (0-31). An additional divider chain is included to divide the system clock down to 20 Hz, which is used by the ringing generator power supply (not shown).

Gate array 612 is downloaded at boot-up by system software. Gate array 612 is based on an SRAM architecture. That is, the internal fusible links commonly found in programmable logic are actually stored in volatile SRAM. Because of this architecture, gate array 612 is downloaded after power-up. Also, note the added flexibility of being able to modify the logic by simply loading new system software. Because the device is SRAM-based, it loses its programming when power is removed.

Bus 608 is also coupled to modem 610, which provides a capability of calling into system 401 on a remote basis to load additional programs, voice prompts, etc., or updates thereto, into hard disk 607. Modem 610 is coupled to coder/decoder

("CODEC") 611, which is coupled to highway 617. This connection allows coupling of modem 610 through cross-point matrix 616 to CO lines through bus 409 to the p-cards described with respect to FIGURE 5.

Also coupled to highway 617 is dual subscriber line access chip (DSLAC) 619, which is well-known in the art, and which is coupled to analog ports 620 and 621, which provide an ability for system 401 to communicate to analog-type connections such as cordless telephones and fax machines.

Highway 617 is also coupled to CODEC 622, which is coupled to transformer 623 to a music source, which provides an ability to couple an external music source to a caller through cross-point matrix 616 for such things as providing the caller with music on hold.

Power to system 401 is provided through switching power supply 407, which converts AC to the various DC supply voltages needed by circuitry within system 401.

Referring next to FIGURE 7, there is illustrated peripheral-card ("p-card") 405, which is coupled to main board 401. Main board 401 communicates with p-card 405 via system speech/control highways 411. This connection 411 is made to microcontroller 701 via digital crosspoint switch 705. P-card 405 provides interconnections between CO lines and analog phone lines to network card 402.

Microcontroller 701 controls all the real-time functions associated with p-card 405. When p-card 405 is plugged into backplane 404, a card address is assigned to p-card 405. This card address is read by microcontroller 701 and is used to filter commands over communication link 411. When network card software wants to communicate with the specific p-card 405, the address is sent in the message

CISCO EXHIBIT 1004
Page 106 of 345

packet which all p-cards 405 receive. P-cards 405 match the address in the message to the hard-wired address on the ribbon cable 411. If a match is made, only that p-card 405 responds to the command set.

Microcontroller 701 contains an internal program memory (not shown) and is connected to an external DRAM 703. The internal program memory contains a bootstrap program which upon reset or power-up, requests a fresh firmware load from network card 402. This firmware load is transferred to DRAM 703. Upon download completion, the program is run from within DRAM 703. This scheme allows for microcontroller 701 firmware to be updated and loaded at any time.

Network card 402 sources all system timing through buffers 704. Timing signals to p-card 405 consists of a 2.048 MHz clock signal, an 8 KHz frame sync, which signifies the first time slot of a 32 time slot highway, and 5 time slot counter bits, which represent a binary count from 0 to 31.

As mentioned above, p-card 405 is assigned a card slot address when it is connected to network card 402. This card slot address is used to calculate which time slots p-card 405 should be using. The time slots used for the CO codecs 706 and analog phone codecs 707 are generated by buffers 704.

The loop start central office (CO) lines are supplied by the local telephone company and consist of a wet balanced differential audio pair. The term "wet" refers to the fact that a voltage of -48 volts is present on the pair. The system requests dial tone from the CO by providing a nominal 200 ohm loop across the TIP and RING conductors and releases the connection by opening the loop. The CO rings the system by placing a 90 vrms AC, 20 Hz sine wave on the TIP and RING conductors. The system seizes the line by going off hook.

CISCO EXHIBIT 1004
Page 107 of 345

Interfaces 708 incorporate a circuit that monitors the voltage present across TIP and RING of each CO. This line voltage monitor circuit serves to detect the ring voltage present during ringing (ring detection) and the unique feature of monitoring the CO line status for conditions such as whether the CO is plugged in or if someone is off hook in front of the system. The latter can be used to detect theft of service or allow a credit card verification terminal to be used without interfering with normal system operation.

The voltage monitor circuit consists of a balanced differential op-amp connected across TIP and RING of the CO lines through a very high impedance (>10M ohms). The output of the four voltage monitor op-amps are fed to an analog-to-digital converter with a built-in analog multiplexer (not shown). Microcontroller 701 firmware monitors the line voltages.

There is also a balanced differential AC coupled op amp across the CO TIP and RING to monitor the low level audio tones present during caller ID. The output of these op-amps are selected via an analog switch during the idle period and are connected to the CO line codec 706.

To correctly terminate the CO line (seizure) care must be taken to satisfy the DC loop requirements (~200 ohms) and the AC impedance requirements (~600 ohms). The classic approach has been to terminate TIP and RING with an inductor (called a holding coil) which has a large inductance (>1 Hy) and a DC resistance of ~200 ohms. The inductor separates the AC and DC components to give the desired effect. The problem is that the inductor must be large enough not to saturate with currents as high as 100 milliamps. An inductor which satisfies these requirements is physically cumbersome.

P-card 405 incorporates a solid state inductor circuit called a gyrator (not shown) to implement the holding coil function. This single transistor emulates an inductor with the above requirements while taking up very little PCB space.

A small solid state relay (not shown) is used as the hook switch. When energized, the gyrator holding coil is placed across TIP and RING closing the loop. The audio present on TIP and RING is AC coupled to a small dry transformer. The secondary of this transformer is connected to the AC termination impedance and to the codec 708, which may be implemented on a dual subscriber line access chip ("DSLAC").

High voltage protection is provided for all paths on the TIP and RING connections. These paths include TIP to RING, TIP to GROUND, RING to GROUND, and TIP and RING to GROUND. This high voltage protection is accomplished by first passing the TIP and RING conductors through positive temperature coefficient varistors (not shown). These varistors act as resettable fuses. When excessive current flows through these varistors, they become resistive thus limiting the current flow. When the excessive current is stopped, the original resistance is restored.

Referring to FIGURE 8, there is illustrated a block diagram of further detail of IP telephony device 105. IP telephony device 105 may be a DSP based telephone instrument. Telephony device 105 communicates with the multimedia server 101 via the UDP/IP Protocol. PHYsical connection to the LAN is via an Ethernet 10/100 Base T interface. IP telephony device 105 contains the ability to perform layer-2 switching between two Ethernet ports in the telephony device for total control over voice versus data quality of service in accordance with the present invention. Speech

CISCO EXHIBIT 1004
Page 109 of 345

samples are digitized, stored in 16 millisecond long packets and transmitted to the multimedia server 101 via the UDP/IP Protocol. As packets are received, they are triple-buffered to compensate for jitter before playback.

Connection 415 from workstation 106 is received by Ethernet RJ-45 connector 815, which is coupled to MAC/PHY device 813. Connection 414 between hub 103 and telephony device 105 is connected to RJ-45 connector 816 which is coupled to MAC/PHY device 814. Devices 813 and 814 are coupled by PCI bus 812 to FPGA/PCI bridge 802.

DSP 801 may be a Texas Instruments Model 5402 DSP; DSP 801 can be the only processor implemented within telephony device 105. DSP 801 performs typical DSP audio algorithms such as tone generation, gain, speaker phone algorithms, and energy detection. In addition, DSP 801 acts as a standard control processor performing such tasks as scanning the keyboard 807, lighting LED lamps 808, displaying LCD messages on LCD 810, performing UDP/IP stack functions, and communicating with devices 813, 814 via the PCI bus 812. Note that DSP 801 communicates with keyboard 807, LEDs 808, LCD display 810, and peripheral connection 811 by I/O device 809 in a typical manner. Peripheral connection 811 permits a coupling of DSP 801 to a DSS console. A DSS console is a stand-alone device, which connects to the IP telephony device 105 to provide 64 individual LED lamps and keys. The lamps can be programmed by the user to monitor the status of individual stations, trunks or features. Pressing the key will access the associated function. Each telephony device in the system can connect to a DSS console. The DSS console communicates with the IP telephony device 105 via a 9600 baud serial communication link. The IP telephony device 105 does not contain a serial UART

CISCO EXHIBIT 1004
Page 110 of 345

device, so the serial data protocol is controlled by software running in DSP 801. Physical connection between the telephony device and DSS console may be via a standard two pair modular line cord.

DSP 801 is coupled to an external FLASH memory 803 and a fast SRAM 804, and FPGA 802 via buses 805 and 806.

CODEC 817 and CODEC 819 perform analog to digital and digital to analog conversion of speech signals. CODEC 817 is connected to the handsets, speaker and microphone elements (not shown) via connector 818, while CODEC 819 is connected to the hands-free speaker 821 through amplifier 820, and to the hands-free microphone 822. Separating the functionality in this way permits the IP telephony device 105 to send tones or voice to one speaker while allowing a normal conversation over the other.

FPGA/PCI bridge 802 performs the functions required to connect telephone 105 to the 10/100 Base T Ethernet devices 813, 814. Since devices 813, 814 are designed to communicate via a standard PCI bus 812, the FPGA 802 implements a minimal PCI bus implementation. In addition, the FPGA 802 implements I/O latches and buffers as required.

Devices 813, 814 perform the Media Access Control and the PHYsical layer functions. Devices 813, 814 communicate to DSP 801 via a standard PCI bus 812, and communicate to the LAN via post-transformer coupled RJ-45 connections 815, 816. Devices 813, 814 can contain FIFOs to minimize lost packets during traffic peaks. Per the PCI bus mastering specification, devices 813, 814 take control of the buses 805, 806 and direct memory access (DMA) data directly to SRAM 804.

Conversely, DSP 801 writes data to be sent into the SRAM 804 and the devices 813, 814 DMA the data via the PCI bus 812 to the LAN.

Referring to FIGURE 9, there is illustrated a station-to-station call to a remote cite. In step 901, a user 105 in Dallas 301 lifts the handset to place an intercom call to user 308 in Detroit 302. In step 902, user 105 dials an access code associated with site 302. These codes are currently three digits long and are in the range 700-799. User 105 then dials the extension number of user 308. In step 903, the IP series multimedia server 101 assigns one of the pooled, compressed voice channels used for voice communication between sites. In step 904, the IP series multimedia server 101 then checks a configuration database for the IP address associated with user 308. A control message is sent to multimedia server 306 via the TCP/IP space WAN 201, requesting the called party 308 to start ringing. Data contained in the control message includes the originator's caller ID. In step 905, the remote multimedia server 306 acknowledges the request and attempts to ring the called extension 308 in the same fashion that a local extension would (i.e., the remote station is now acting as though it was placing the call from the local site). In step 906 , if the called party 308 does not answer, the call is handled by the normal call processing routines to re-route the call (in this case, the call is rerouted to voice mail).

Referring to FIGURE 11, there is illustrated a process implemented within an IP telephony device, such as telephony device 105, which process can be run within DSP 801. The process detects network congestion and notifies the multimedia server 101 via a congestion message. The process begins in step 1101, and proceeds to step 1102 to determine whether the IP telephony device 105 is off the hook. If it is, the process proceeds to step 1103 where audio data packets are received by telephony

device 105 from the hub 103. The audio (voice) data packets being received from hub 103 have been sent by multimedia server 101, and are packets containing audio information communicated between telephony device 105 and some other telecommunications device coupled to the system. As these packets are received, they are saved within the jitter buffer, which fills up to a certain level. After this level is reached, the audio packets will then be played by telephony device 105 to the user through the speaker 821 or handset 818. It is generally understood within the design of such IP telephony devices that when a packet is played to the user, it is replaced in the jitter buffer by an incoming packet. There is some cushion in the jitter buffer, but when the audio packets are not replaced sufficiently, then the ability of the IP telephony device to communicate the audio information to the user in real-time becomes jeopardized. This is described in further detail below. In step 1104, as these packets are run through a jitter buffer, a determination is made whether the number of packets buffered by the jitter buffer falls below a predetermined threshold, or level. If not, the process merely returns to step 1103. However, if level of packets buffered by the jitter buffer falls below the predetermined threshold, or level, in step 1104, the process will proceed to step 1105 to send a congestion message to multimedia server 101.

Note, the process of FIGURE 11 is not limited to audio data, but can be utilized in any system where there is a need to increase the transfer rate of multimedia data between two network devices to overcome bursty transmissions of data in the network. Though the invention is helpful when there is a need to transmit the multimedia data in, or substantially in, real-time, the invention is applicable even when there is not a need for real-time transmissions.

Essentially, a data packet transmitting voice data contains 16 milliseconds (ms) of voice data. For there to be a real-time transmittal of voice communications no more than 16 ms can pass between received data packets. A jitter buffer is utilized to temporarily store received data packets. A jitter buffer generally will hold three data packets passing through the jitter buffer. Typically, up to a 48 ms delay is acceptable with audio communications before such a delay is discernable to the listener. The jitter buffer can be used to monitor whether the congestion on the network has increased to such an extent that unacceptable delays in the receipt of voice data packets is perceived. A jitter buffer will typically use a pointer that points to the buffer entry where the next data packet that is received is to be stored, while an out pointer points to the last jitter buffer. If the pointers become closer, this will indicate that congestion within the network is increasing. How close the pointers are can determine the predetermined threshold that is monitored in step 1104.

Referring next to FIGURES 12A and 12B, a flow diagram is illustrated that is implemented within multimedia server 101 upon receipt of a congestion message from any IP telephony device within the network. The process begins in step 1201, and proceeds to step 1202 to determine whether a congestion message has been received from any telephony device. If yes, the process proceeds to step 1203 to determine whether the multimedia server 101 is already in a quality of service (QOS) mode. If yes, the process will move forward to step 1206. If not, the process will proceed to step 1204 to switch to QOS mode. Thereafter, in step 1205, a signal will then be sent from multimedia server 101 to all (or only a selected group of) IP telephony devices within the network for such devices to begin a QOS algorithm using a Most Aggressive Mode. Such a QOS algorithm is further described below

CISCO EXHIBIT 1004
Page 114 of 345

with respect to FIGURE 10. Thereafter, in step 1206, a timer is started, or restarted if the timer has previously begun and is still running. In step 1207, a determination is made whether the timer has expired. If not, the process will proceed to step 1208 to determine whether another congestion message has been received from any IP telephony device. If not, the process merely returns to step 1207. However, if another congestion message has been received from an IP telephony device, the process will return to step 1206 to restart the timer.

If in step 1207, the timer has expired, the process will proceed to step 1209, where a determination is made whether the QOS mode is in the Most Aggressive Mode. If yes, the process will proceed to step 1211 to then send a signal to all (or a selected group of) IP telephony devices on the network to use a Least Aggressive Mode, which is further described below with respect to FIGURE 10. Thereafter, in step 1212, the previously noted timer will be restarted and the process will return to step 1207. If in step 1209, the QOS mode is not in the Most Aggressive Mode, then in step 1210, a signal will be sent to all IP telephony devices on the network to stop the QOS algorithm described below with respect to FIGURE 10. And the process will return to step 1202.

Referring now to FIGURE 10, there is illustrated a process run within each of the IP telephony devices on the network when such devices receive one of the aforementioned QOS messages from the multimedia server 101. The process begins in step 1001 and proceeds to step 1002 where a determination is made whether one of the aforementioned QOS mode signals has been received from the multimedia server 101. If yes, the process proceeds to step 1003 to determine whether the signal that has been received is a signal indicating that the IP telephony device 105 should enter into

a Most Aggressive Mode. If yes, the process will then proceed to step 1004 to throttle the workstation 106 using the Most Aggressive Mode. The process then returns to step 1002. If in step 1003 it is determined that the signal received from the multimedia server 101 is not a Most Aggressive Mode signal, the process proceeds to step 1005 to determine if the signal received is a signal to the IP telephony device 105 to enter into a least aggressive mode. If yes, the process proceeds to step 1006 to throttle the workstation 106 using the Least Aggressive Mode. If in step 1005 the signal received from the multimedia server 101 is not either to enter into the Most Aggressive Mode or the Least Aggressive Mode, then a determination is made whether the signal received from the multimedia server 101 is to turn off the QOS Mode. If yes, then in step 1008, the IP telephony device 105 discontinues throttling data to and from the workstation 106.

Essentially, the process illustrated in FIGURE 10 has the IP telephony device 105 beginning a hold-off procedure with the workstation 106. The level of aggressiveness, whether it is the Most Aggressive Mode or the Least Aggressive Mode can be thought of as a duty cycle whereby the device blocks data from the workstation 106 for a percentage of the time.

The throttling can be performed using many different methods. One method would be for the telephony device 105 to flood the connection 415 to the workstation 106 with idle patterns (jabber). The various levels of flow control needed could be achieved by a jabber duty cycle. The Most Aggressive Mode may have an eighty percent duty cycle while the Least Aggressive Mode may have a twenty percent duty cycle. During the jabber process, communication between the workstation 106 and

the server 104 is disrupted, allowing more bandwidth for the voice packets between the telephony device 105 and the multimedia server 101.

"Jabbering" is a standard Ethernet process. In local area networking technology, to jabber is to continuously send random data (garbage). This locks up the network with the incessant transmission of the garbage. In an Ethernet network, any node can transmit at any time. If more than one node happens to transmit at the same time, both nodes will notice that a collision has occurred, hold off for some amount of time, then re-transmit. If a collision is detected again, the process continues until the data is delivered. Jabbering is the process of flooding the network with collisions in such a way that no data can actually be transmitted due to the number of collisions. Since the connection between the IP telephony device 105 and workstation 106 is a separate network, the jabbering by the IP telephony device 105 merely stops data from flowing between the IP telephony device 105 and the workstation 106. The network on the other side of the IP telephony device 105 is unaffected because it is in a different "collision domain."

The workstation 106 cannot then transmit data because the jabbering is present. Each side will try to send data to the other side, but every time they try, they will fail because of the jabbering. The source of the jabbering signal is not important. Jabbering can be explained in a hardware fashion as follows. When one and only one station is transmitting, the voltage on the wire is a certain voltage as specified by the IEEE 802.3 Specification. If two stations start to transmit, the voltage is double so any station listening is capable of detecting the collision. When the voltage goes to zero because the offenders are holding off, it is now safe to try again. Jabbering can be thought of as a station placing a static voltage level on the wire between the

CISCO EXHIBIT 1004
Page 117 of 345

workstation 106 and the IP telephony device 105 sufficiently high as to be detected as a collision. Neither the IP telephone 105 or the workstation 106 will attempt to transmit to each other until this voltage level goes away.

The present invention permits the IP telephony device 105 from stopping the workstation 106 from sending data by causing so many collisions that none of the data can make it through. Essentially, data transmission between the IP telephony device 105 and the workstation 106 is frozen. The IP telephony device 105 will perform this jabbering process in bursts. When the collisions stop, the data the workstation 106 was trying to send will then be passed on to the network through the IP telephony device 105. Also, if the IP telephony device 105 was trying to send something from the network to the workstation 106, that side is frozen as well. These collision bursts are generally short enough that the protocol does not time out, but long enough to throttle the data flow. The duty cycle of the collision bursts may be proportional to the amount of data allowed to flow (i.e., if the duty cycle is 80/20, eighty percent of the time data is blocked).

A duty cycle may be used since jabbering cannot continue forever because the underlying protocols such as TCP/IP or NOVELL and the workstation 106 will eventually time out and give up on the data it is trying to send. The duty cycle allows data to flow often enough so that the effective throughput is reduced while allowing the protocols to survive. As an example, consider data flowing unobstructed between the workstation 106 and the network on the other side of the IP telephony device 105. Multimedia transmissions are initiated which, in combination with the network data, starts to choke the network. The detection mechanism (monitoring circuitry) in the IP telephony devices 105 alerts the multimedia server 101 that the network is in trouble

CISCO EXHIBIT 1004
Page 118 of 345

with respect to too much congestion to permit real-time multimedia communications to occur, or merely that the transfer rate of such communications has decreased unsatisfactorily. The multimedia server 101 messages to all of the IP telephony devices that they need to throttle-down the workstation data they are receiving using the most aggressive algorithm (e.g., using an 80/20 duty cycle where eighty percent of the time the devices are in the jabber state, and twenty percent of the time they are allowing data to flow). As the IP telephony devices stop reporting congestion, the multimedia server 101 may issue the next lower level or hold-off (e.g., a 50/50 duty cycle). The multimedia server 101 will continue until a point of equilibrium exists that allows the maximum data flow in the network along with the required multimedia traffic bandwidth.

As an alternative, jitter buffers with the multimedia server 101 may also monitor their level of receipt of multimedia data from individual IP telephony devices to determine whether a congestion message should be sent to the IP telephony devices to throttle down data through such devices from their respective workstations.

The present invention incorporates many other unique features. Essentially, the present invention is able to emulate one large, monolithic phone system. As such, features available at one particular site are available remotely to all sites. For example, the present invention can implement a direct station selection with busy indication feature providing an ability for a user at one IP telephone to see that another person in a remote system at another IP telephone is currently idle, busy, or in a do not disturb state. Another feature of the present invention is an ability to park a call in one system and page a user in a remote system to pick up the parked call. The remote user answers the call in the same manner they would a local call. Another

CISCO EXHIBIT 1004
Page 119 of 345

feature capable within the present invention is an ability to transfer a call to a remote site, and if the call transferred to the remote site goes unanswered, the call will be returned to the originator. The present invention also provides for call forwarding between systems. For example, if a user is going to be in a remote site for some period of time, that user can forward his/her calls to that location.

Another feature available within the present invention is call rerouting. When a call goes unanswered, the system of the present invention allows the call to be rerouted to voicemail, another extension, etc. In a remote site implementation, these destinations do not have to be in the same physical system. In other words, a call into a local system where the caller has dialed an extension associated with a remote system, the local system will automatically reroute that call to the remote system.

Another unique feature of the present invention allows a user, such as a supervisor, to monitor the audio conversations of users on the system and current display information of another station. This can be done between remote systems so that the monitoring individual does not have to be in the same system as the user who is being monitored.

Yet another unique feature of the present invention permits automatic call distribution agents to be distributed among remote systems with all the feature functionality available to a single system.

Yet another unique feature of the present invention permits a user to answer a call in a remote site using the pick up feature. The present invention allows members of departments and live ringing groups to be located anywhere in the distributed system.

CISCO EXHIBIT 1004
Page 120 of 345

The present invention also increases the voicemail functionality of a telephone system. A virtual mail box key feature allows a user to monitor the status of a mail box in a remote system. If the key is lit, the user can press the key to retrieve messages stored in that mail box. Another feature is the quick group feature that allows a user to leave voicemail messages in a number of recipients' mail boxes by merely pressing their associated DSS key. The recipients can be in remote systems as well as the local system. Like the quick groups feature, a quick move feature allows a user to move a copy of a voicemail message to a number of recipients by merely depressing their respective DSS keys on the user's telephone.

Another unique feature to the present invention permits a user to dial numbers stored in a series of lists. A user is permitted to scroll through a list of remote sites. When the user finds the desired site, the user is then presented with the same options a user local to that site would have. An example of this feature would allow a user in Los Angeles to locate the New York site, then call Bob Smith using a particular feature all without the need of an operator or printed directory.

Although the present invention and its advantages have been described in detail, it should be understood that various changes, substitutions and alterations can be made herein without departing from the spirit and scope of the invention as defined by the appended claims.

CISCO EXHIBIT 1004
Page 121 of 345

WHAT IS CLAIMED IS:

1. An information handling system comprising:

a hub;

a multimedia server coupled to the hub;

a telephony device coupled to the hub; and

a first network device coupled to the hub through the telephony device, wherein the telephony device includes circuitry for throttling data sent from the first network device.

2. The system as recited in claim 1, further comprising:

a second network device coupled to the hub, wherein the data sent from the first network device is addressed for transmission to the second network device.

3. The system as recited in claim 2, wherein the hub, multimedia server, second network device, telephony device, and first network device are coupled to each other via a network.

4. The system as recited in claim 3, wherein the network is a TCP/IP network.

5. The system as recited in claim 4, wherein the network is a packet switched network.

CISCO EXHIBIT 1004
Page 122 of 345

6. The system as recited in claim 3, wherein the telephony device and multimedia server communicate using an IP protocol.

7. The system as recited in claim 1, wherein the throttling circuitry reduces a future amount of data from being transferred from the first network device if the amount of data exceeds a predetermined threshold.

8. The system as recited in claim 1, wherein the telephony device includes circuitry for monitoring an amount of data addressed to and received by the telephony device, wherein the throttling circuitry reduces a future amount of data from being transferred from the first network device if the amount of data addressed to and received by the telephony device falls below a predetermined threshold.

9. The system as recited in claim 8, wherein the monitoring circuitry comprises a jitter buffer where the predetermined threshold is a predetermined level within the jitter buffer.

10. The system as recited in claim 8, wherein the monitoring circuitry further comprises circuitry for sending a congestion message to the multimedia server when the amount of data addressed to and received by the telephony device falls below the predetermined threshold.

CISCO EXHIBIT 1004
Page 123 of 345

11. The system as recited in claim 10, wherein the multimedia server further comprises circuitry for sending a throttling signal to the telephony device in response to receipt of the congestion message from the monitoring circuitry.

12. The system as recited in claim 11, wherein the throttling circuitry in the telephony device throttles the future amount of data sent from the first network device in response to receipt of the throttling signal.

13. The system as recited in claim 12, wherein the throttling signal includes a mode level in which the throttling circuitry should operate.

14. The system as recited in claim 13, wherein the throttling circuitry adjusts its level of throttling of the data in response to the mode level included in the throttling signal.

15. The system as recited in claim 14, wherein the mode level is a most aggressive mode, wherein the throttling circuitry will throttle the future amount of data sent from the first network device at a highest level in response to the mode level being in the most aggressive mode.

16. The system as recited in claim 15, wherein the sending circuitry in the multimedia server will designate the mode level at the most aggressive mode as long as the congestion message is received from any telephony device coupled to the multimedia server within a specified time period.

CISCO EXHIBIT 1004
Page 124 of 345

17. The system as recited in claim 16, wherein the throttling signal will switch to a least aggressive mode if the congestion message is not received from any telephony device coupled to the multimedia server within the specified time period.

18. The system as recited in claim 17, wherein the throttling circuitry will throttle the future amount of data sent from the first network device at a level lower than the highest level in response to the mode level being in the least aggressive mode.

19. The system as recited in claim 18, wherein the throttling signal will contain a signal to stop the throttling of the future amount of data if the congestion message is not received from any telephony device coupled to the multimedia server within the specified time period while the mode level has been in the least aggressive mode.

20. The system as recited in claim 19, further comprising another telephony device coupled between the hub and a second network device, wherein the telephony device also includes throttling circuitry for throttling a future amount of data sent from the second network device in response to receipt of the throttling signal.

21. The system as recited in claim 1, wherein the data sent from the first network device is sufficiently throttled so that the telephony device can communicate real-time multimedia signals to and from the multimedia server.

CISCO EXHIBIT 1004
Page 125 of 345

22. The system as recited in claim 1, wherein the throttling results in no data being sent from the first network device to the telephony device.

23. An information handling system comprising:

a TCP/IP network;

a hub;

a multimedia server coupled to the hub via the TCP/IP network;

a first IP telephony device coupled to the hub via the TCP/IP network;

a first network device coupled to the first IP telephony device;

a second network device coupled to the hub via the TCP/IP network, wherein data sent from the first network device is addressed for transmission to the second network device and is transmitted through the first IP telephony device to the TCP/IP network, wherein the first IP telephony device includes first circuitry for monitoring if an amount of multimedia data being addressed to the IP telephony device and received over the TCP/IP network falls below a first predetermined threshold, wherein the first IP telephony device includes first circuitry for throttling the data sent from the first network device in response to the first monitoring circuitry determining that the amount of multimedia data being received by the first IP telephony device over the TCP/IP network falls below the first predetermined threshold.

24. The system as recited in claim 23, further comprising:

a second IP telephony device coupled to the hub via the TCP/IP network; and

a third network device coupled to the second IP telephony device, wherein data sent from the third network device is addressed for transmission to the second network device and is transmitted through the second IP telephony device to the TCP/IP network,

CISCO EXHIBIT 1004
Page 127 of 345

wherein the second IP telephony device includes second circuitry for throttling the data sent from the third network device in response to the first monitoring circuitry determining that the amount of multimedia data being received by the first IP telephony device over the TCP/IP network falls below the first predetermined threshold.

25. The system as recited in claim 24, wherein the first monitoring circuitry further comprises first circuitry for sending a first congestion message to the multimedia server over the TCP/IP network when the amount of multimedia data being received by the first IP telephony device over the TCP/IP network falls below the first predetermined threshold.

26. The system as recited in claim 25, wherein the multimedia server further comprises circuitry for sending a throttling signal to the first and second IP telephony devices over the TCP/IP network in response to receipt of the first congestion message from the first monitoring circuitry.

27. The system as recited in claim 26, wherein the first throttling circuitry in the first IP telephony device throttles the data sent from the first network device in response to receipt of the throttling signal, wherein the second throttling circuitry in the second IP telephony device throttles the data sent from the third network device in response to receipt of the throttling signal.

CISCO EXHIBIT 1004
Page 128 of 345

28. The system as recited in claim 27, wherein the throttling signal includes a mode level in which the first and second throttling circuitries should operate.

29. The system as recited in claim 28, wherein the first throttling circuitry adjusts its level of throttling of the data in response to the mode level included in the throttling signal, wherein the second throttling circuitry adjusts its level of throttling of the data in response to the mode level included in the throttling signal.

30. The system as recited in claim 29, wherein the mode level is a most aggressive mode, wherein the first throttling circuitry will throttle the data sent from the first network device at a highest level in response to the mode level being in the most aggressive mode, wherein the second throttling circuitry will throttle the data sent from the third network device at a highest level in response to the mode level being in the most aggressive mode.

31. The system as recited in claim 30, wherein the second IP telephony device includes second circuitry for monitoring if a second amount of multimedia data being received by the second IP telephony device over the TCP/IP network falls below a second predetermined threshold, wherein the second monitoring circuitry further comprises second circuitry for sending a second congestion message to the multimedia server over the TCP/IP network when the second amount of multimedia data being received by the second IP telephony device over the TCP/IP network falls below the second predetermined threshold.

CISCO EXHIBIT 1004
Page 129 of 345

32. The system as recited in claim 31, wherein the sending circuitry in the multimedia server will designate the mode level at the most aggressive mode as long as the first or second congestion messages are received within a specified time period.

33. The system as recited in claim 31, wherein the throttling signal will switch to a least aggressive mode if the congestion message is not received from any IP telephony device coupled to the multimedia server within the specified time period.

34. The system as recited in claim 32, wherein the throttling circuitry will throttle the data sent from the second network device at a level lower than the highest level in response to the mode level being in the least aggressive mode.

35. The system as recited in claim 33, wherein the throttling signal will contain a signal to stop the throttling of the data if the congestion message is not received from any IP telephony device coupled to the multimedia server within the specified time period while the mode level has been in the least aggressive mode.

36. The system as recited in claim 34, wherein the multimedia data includes real-time audio information.

37. The system as recited in claim 23, wherein the data sent from the first network device is sufficiently throttled so that the first IP telephony device can communicate real-time signals to and from the multimedia server over the TCP/IP network.

CISCO EXHIBIT 1004
Page 130 of 345

38. In an information handling system comprising a hub, a multimedia server ("multimedia server") coupled to the hub, a telephone coupled to the hub, a workstation coupled to the hub through the telephone, and a data server coupled to the hub, a method comprising the steps of:

transferring data from the workstation to the telephone, wherein the data sent from the workstation is addressed for transmission to the data server;

communicating audio information between the telephone and the multimedia server; and

sufficiently throttling the data sent from the workstation to the telephone to increase a rate of transfer of the audio information during the communicating step.

39. The method as recited in claim 38, wherein the hub, multimedia server, data server, telephone, and workstation are coupled to each other via a network.

40. The method as recited in claim 39, wherein the network is a TCP/IP network.

41. The method as recited in claim 39, wherein the network is a packet switched network.

42. The method as recited in claim 39, wherein the telephone and multimedia server communicate using an IP protocol.

43. The method as recited in claim 38, wherein the throttling step further comprises the step of reducing a future amount of data from being transferred from the workstation if the amount of data exceeds a predetermined threshold.

44. The method as recited in claim 38, wherein the throttling step further comprises the step of monitoring an amount of the audio information being received by the telephone from the multimedia server.

45. The method as recited in claim 44, wherein the monitoring step further comprises the step of monitoring a predetermined level within a jitter buffer.

46. The method as recited in claim 44, wherein the monitoring step further comprises the step of the telephone sending a congestion message to the multimedia server when the amount of the audio information falls below the predetermined level.

47. The method as recited in claim 46, further comprising the step of the multimedia server sending a throttling signal to the telephone in response to receipt of the congestion message.

48. The method as recited in claim 47, wherein the throttling step operates in response to receipt of the throttling signal.

49. The method as recited in claim 48, wherein the throttling signal includes a mode level.

CISCO EXHIBIT 1004
Page 132 of 345

50. The method as recited in claim 49, wherein the throttling step further comprises the step of adjusting a level of throttling of the data in response to the mode level included in the throttling signal.

51. The method as recited in claim 50, wherein the step of the multimedia server sending a throttling signal to the telephone in response to receipt of the congestion message further comprises the step of setting the mode level to a most aggressive mode, wherein the throttling step will throttle the future amount of data sent from the workstation at a highest level in response to the mode level being in the most aggressive mode.

52. The method as recited in claim 51, wherein the setting step will designate the mode level at the most aggressive mode as long as the congestion message is received from any telephone coupled to the multimedia server within a specified time period.

53. The method as recited in claim 52, wherein the step of the multimedia server sending a throttling signal to the telephone in response to receipt of the congestion message further comprises the step of setting the mode level to a least aggressive mode if the congestion message is not received from any telephone coupled to the multimedia server within the specified time period.

CISCO EXHIBIT 1004
Page 133 of 345

54. The method as recited in claim 53, wherein the throttling step will throttle the future amount of data sent from the workstation at a level lower than the highest level in response to the mode level being in the least aggressive mode.

55. The method as recited in claim 54, wherein the step of the multimedia server sending a throttling signal to the telephone in response to receipt of the congestion message further comprises the step of sending a message to stop the throttling of the future amount of data if the congestion message is not received from any telephone coupled to the multimedia server within the specified time period while the mode level has been in the least aggressive mode.

56. The method as recited in claim 38, wherein the throttling results in no data being sent from the workstation to the telephone.

CISCO EXHIBIT 1004
Page 134 of 345

57. An IP telephony device comprising:

an input data port for receiving data, wherein the data is addressed for transmission to a location other than the IP telephony device;

circuitry for communicating information to and from the IP telephony device; and

circuitry for sufficiently throttling the data so that the communication of the information can be performed in real-time.

58. The IP telephony device as recited in claim 57, wherein the IP telephony device communicates the information using an IP protocol.

59. The IP telephony device as recited in claim 58, wherein the monitoring circuitry further comprises circuitry for sending a congestion message from a data output port when the amount of the information being received by the IP telephony device falls below a predetermined level.

60. The IP telephony device as recited in claim 59, wherein the throttling circuitry throttles the future amount of data received at the input data port in response to receipt of a throttling signal at the input data port, wherein the throttling signal is a function of the congestion message.

61. The IP telephony device as recited in claim 60, wherein the throttling signal includes a mode level in which the throttling circuitry should operate.

CISCO EXHIBIT 1004
Page 135 of 345

62. The IP telephony device as recited in claim 61, wherein the throttling circuitry adjusts its level of throttling of the data in response to the mode level included in the throttling signal.

63. The IP telephony device as recited in claim 62, wherein when the mode level is a most aggressive mode, the throttling circuitry will throttle the future amount of data at a highest level in response to the mode level being in the most aggressive mode.

64. The IP telephony device as recited in claim 63, wherein the throttling circuitry will throttle the future amount of data sent from the workstation at a level lower than the highest level in response to the mode level being in a least aggressive mode.

65. The IP telephony device as recited in claim 57, further comprising:

a microphone;

a speaker; and

circuitry for communicating the audio information to the speaker and from the microphone.

66. The IP telephony device as recited in claim 60, further comprising:

a microphone;

a speaker; and

circuitry for communicating the audio information to the speaker and from the microphone.

CISCO EXHIBIT 1004
Page 136 of 345

67. A multimedia server comprising:

a network connection for connecting the multimedia server to a data network;

circuitry operable for communicating audio information with a telephone connected to the data network;

circuitry operable for sending a throttling signal onto the data network in response to receipt of a congestion message from the data network.

68. The multimedia server as recited in claim 67, wherein the network is a TCP/IP network.

69. The multimedia server as recited in claim 67, wherein the network is a packet switched network.

70. The multimedia server as recited in claim 67, wherein the communicating circuitry further comprises circuitry operable for communicating the audio information using an IP protocol.

71. The multimedia server as recited in claim 68, wherein the throttling signal includes a mode level.

72. The multimedia server as recited in claim 71, wherein the sending circuitry will designate the mode level at a most aggressive mode as long as the congestion message is received within a specified time period.

CISCO EXHIBIT 1004
Page 137 of 345

73. The multimedia server as recited in claim 72, wherein the throttling signal will switch to a least aggressive mode if the congestion message is not received within the specified time period.

74. The multimedia server as recited in claim 73, wherein the throttling signal will contain a stop data throttling signal if the congestion message is not received within the specified time period while the mode level has been in the least aggressive mode.

75. The multimedia server as recited in claim 67, further comprising:

a peripheral card adaptable for coupling to a telecommunications network.

76. The multimedia server as recited in claim 75, wherein the telecommunications network is a public switched telephone network.

77. The multimedia server as recited in claim 75, further comprising:

switching circuitry for communicating the audio information between the network connection and the peripheral card.

CISCO EXHIBIT 1004
Page 138 of 345

VOICE OVER IP TELEPHONE SYSTEM

ABSTRACT OF THE DISCLOSURE

An information handling system comprises a TCP/IP network connecting a hub to a multimedia server and the hub to a data server, and the hub to an IP telephony device that is then coupled to a network device. Data sent from the network device is addressed for transmission to the data server and is transmitted through the IP telephony device to the TCP/IP network. The IP telephony device monitors when an amount of data being received over the network falls below a predetermined threshold. If this occurs, the IP telephony device will send a signal to the multimedia server, which will then generate a congestion signal to send to all or selected IP telephony devices in the network to throttle data being received by the IP telephony devices from their respective connected network devices.

::ODMA\PCDOCS\AUSTIN_1\154403\4
207:16312-P005US

CISCO EXHIBIT 1004
Page 139 of 345

UNITED STATES PATENT AND TRADEMARK OFFICE

COMMISSIONER FOR PATENTS
UNITED STATES PATENT AND TRADEMARK OFFICE
WASHINGTON, D.C. 20231
www.uspto.gov

Bib Data Sheet

CONFIRMATION NO. 7490

SERIAL NUMBER	FILING DATE	CLASS	GROUP ART UNIT	ATTORNEY DOCKET NO.
09/775,018	02/01/2001 RULE	370	2661	16312-P005US

APPLICANTS

Eric G. Suder, Plano, TX;
Harold E.A. Hansen II, Plano, TX;

** CONTINUING DATA ********** N/A

** FOREIGN APPLICATIONS ********** N/A

IF REQUIRED, FOREIGN FILING LICENSE GRANTED ** 03/09/2001

** SMALL ENTITY **

Foreign Priority claimed	STATE OR COUNTRY	SHEETS DRAWING	TOTAL CLAIMS	INDEPENDENT CLAIMS
☐ yes ☑ no	TX	13	77	5

35 USC 119 (a-d) conditions met: ☐ yes ☑ no ☐ Met after Allowance

Verified and Acknowledged: _____ Examiner's Signature Initials

ADDRESS

Kelly K. Kordzik
Suite 800
100 Congress Avenue
Austin , TX 78701

TITLE

Quality of service in a voice over IP telephone system

FILING FEE RECEIVED	FEES: Authority has been given in Paper	
1013	No. _____ to charge/credit DEPOSIT ACCOUNT No. _____ for following:	☐ All Fees ☐ 1.16 Fees (Filing) ☐ 1.17 Fees (Processing Ext. of time) ☐ 1.18 Fees (Issue) ☐ Other _____ ☐ Credit

PATENT APPLICATION SERIAL NO. _____

U.S. DEPARTMENT OF COMMERCE
PATENT AND TRADEMARK OFFICE
FEE RECORD SHEET

02/07/2001 VYANG1 00000021 09775018

01 FC:201	355.00 OP
02 FC:203	513.00 OP
03 FC:202	80.00 OP

PTO-1556
(5/87)

*U.S. GPO: 1999-459-082/19144

Application or Docket Number

PATENT APPLICATION FEE DETERMINATION RECORD
Effective October 1, 2000

09775018

CLAIMS AS FILED - PART I

	(Column 1)	(Column 2)
TOTAL CLAIMS 77		
FOR	NUMBER FILED	NUMBER EXTRA
TOTAL CHARGEABLE CLAIMS	77 minus 20=	* 57
INDEPENDENT CLAIMS	5 minus 3 =	* 2
MULTIPLE DEPENDENT CLAIM PRESENT		☐

* If the difference in column 1 is less than zero, enter "0" in column 2

SMALL ENTITY TYPE ☐		OR	OTHER THAN SMALL ENTITY	
RATE	FEE		RATE	FEE
BASIC FEE	355.00	OR	BASIC FEE	710.00
X$ 9=	513	OR	X$18=	
X40=	80	OR	X80=	
+135=		OR	+270=	
TOTAL	948	OR	TOTAL	

CLAIMS AS AMENDED - PART II

AMENDMENT A	(Column 1) CLAIMS REMAINING AFTER AMENDMENT		(Column 2) HIGHEST NUMBER PREVIOUSLY PAID FOR	(Column 3) PRESENT EXTRA
Total	*	Minus	**	=
Independent	*	Minus	***	=
FIRST PRESENTATION OF MULTIPLE DEPENDENT CLAIM				☐

SMALL ENTITY		OR	OTHER THAN SMALL ENTITY	
RATE	ADDITIONAL FEE		RATE	ADDITIONAL FEE
X$ 9=		OR	X$18=	
X40=		OR	X80=	
+135=		OR	+270=	
TOTAL ADDIT. FEE		OR	TOTAL ADDIT. FEE	

AMENDMENT B	(Column 1) CLAIMS REMAINING AFTER AMENDMENT		(Column 2) HIGHEST NUMBER PREVIOUSLY PAID FOR	(Column 3) PRESENT EXTRA
Total	*	Minus	**	=
Independent	*	Minus	***	=
FIRST PRESENTATION OF MULTIPLE DEPENDENT CLAIM				☐

RATE	ADDITIONAL FEE		RATE	ADDITIONAL FEE
X$ 9=		OR	X$18=	
X40=		OR	X80=	
+135=		OR	+270=	
TOTAL ADDIT. FEE		OR	TOTAL ADDIT. FEE	

AMENDMENT C	(Column 1) CLAIMS REMAINING AFTER AMENDMENT		(Column 2) HIGHEST NUMBER PREVIOUSLY PAID FOR	(Column 3) PRESENT EXTRA
Total	*	Minus	**	=
Independent	*	Minus	***	=
FIRST PRESENTATION OF MULTIPLE DEPENDENT CLAIM				☐

RATE	ADDITIONAL FEE		RATE	ADDITIONAL FEE
X$ 9=		OR	X$18=	
X40=		OR	X80=	
+135=		OR	+270=	
TOTAL ADDIT. FEE		OR	TOTAL ADDIT. FEE	

* If the entry in column 1 is less than the entry in column 2, write "0" in column 3.
** If the "Highest Number Previously Paid For" IN THIS SPACE is less than 20, enter "20."
***If the "Highest Number Previously Paid For" IN THIS SPACE is less than 3, enter "3."
The "Highest Number Previously Paid For" (Total or Independent) is the highest number found in the appropriate box in column 1.

CLAIMS ONLY

SERIAL NO.	FILING DATE
09775018	
APPLICANT(S)	

CLAIMS

	AS FILED		AFTER 1st AMENDMENT		AFTER 2nd AMENDMENT			*		*		*	
	IND.	DEP.	IND.	DEP.	IND.	DEP.		IND.	DEP.	IND.	DEP.	IND.	DEP.
1	1						51		1				
2		1					52		1				
3		1					53		1				
4		1					54		1				
5		1					55		1				
6		1					56		1				
7		1					57	1					
8		1					58		1				
9		1					59		1				
10		1					60		1				
11		1					61		1				
12		1					62		1				
13		1					63		1				
14		1					64		1				
15		1					65		1				
16		1					66		1				
17		1					67	1					
18		1					68		1				
19		1					69		1				
20		1					70		1				
21		1					71		1				
22		1					72		1				
23	1						73		1				
24		1					74		1				
25		1					75		1				
26		1					76		1				
27		1					77		1				
28		1					78						
29		1					79						
30		1					80						
31		1					81						
32		1					82						
33		1					83						
34		1					84						
35		1					85						
36		1					86						
37		1					87						
38	1						88						
39		1					89						
40		1					90						
41		1					91						
42		1					92						
43		1					93						
44		1					94						
45		1					95						
46		1					96						
47		1					97						
48		1					98						
49		1					99						
50		1					100						
TOTAL IND.	5	⬇		⬇		⬇	TOTAL IND.		⬇		⬇		⬇
TOTAL DEP.	72						TOTAL DEP.						
TOTAL CLAIMS	77						TOTAL CLAIMS						

* MAY BE USED FOR ADDITIONAL CLAIMS OR ADMENDMENTS

FORM PTO-2022 (1-98)

U.S.DEPARTMENT OF COMMERCE
Patent and Trademark Office

16312-P005US

PATENT

#7

J1033 U.S. PTO
09/775018
02/01/01

IN THE UNITED STATES PATENT AND TRADEMARK OFFICE

In re Application: Eric G. Suder et al.

Serial No.:

Filed: (herewith)

Art Unit:

Examiner:

For: QUALITY OF SERVICE IN A VOICE OVER IP TELEPHONE SYSTEM

INFORMATION DISCLOSURE STATEMENT

Assistant Commissioner for Patents
Washington, D.C. 20231

Dear Sir:

This Information Disclosure Statement is being submitted in connection with the above-identified application for patent. Applicant submits herewith patents, publications or other information of which he is aware, which he believes may be material to the patentability of this

---

CERTIFICATION UNDER 37 C.F.R. § 1.8

I hereby certify that this correspondence (along with any item referred to as being enclosed herewith) is being deposited with the United States Postal Service with sufficient postage as first class mail in an envelope addressed to the Assistant Commissioner for Patents, Washington, D.C. 20231, on February 1, 2001.

Toni Stanley
Signature

Toni Stanley
(Printed name of person certifying)

application and in respect of which there may be a duty to disclose in accordance with 37 C.F.R. § 1.56.

While this Information Disclosure Statement may be "material" pursuant to 37 C.F.R. § 1.56, it is not intended to constitute an admission that any patent, publication or other information referred to herein is "prior art" for this invention unless specifically designated as such.

In accordance with 37 C.F.R. § 1.97(g), the filing of this Information Disclosure Statement shall not be construed to mean that a search has been made or that no other material information as defined in 37 C.F.R. § 1.56(a) exists.

The attached form, PTO-1449, provides a listing of patents, publications, or other information as required by 37 C.F.R. § 1.98(a)(1).

A copy of the items identified on the attached Form PTO-1449 is supplied herewith.

Respectfully submitted,

WINSTEAD SECHREST & MINICK P.C.

Attorneys for Applicants

By: _____

Kelly K. Kordzik
Reg. No. 36,571

100 Congress Avenue
Suite 800
Austin, Texas 78701
(512) 370-2851

::ODMA\PCDOCS\AUSTIN_1\157650\1
207:16312-P005US

In Place of FORM PTO-1449 (Modified)

LIST OF PATENTS AND PUBLICATIONS FOR APPLICANT'S INFORMATION DISCLOSURE STATEMENT

Serial No.:
Applicant: Eric G. Suder et al.
Filing Date: (herewith)
Group:
Atty. Docket No.: 16312-P005US

J1033 U.S. PTO
09/775018
02/01/01

Reference Designation

U.S. PATENT DOCUMENTS

Examiner Initial	Document Number	Date	Name	Class	Subclass	Filing Date if Appropriate
AAA						
ABA						
ACA						
ADA						
AEA						
AFA						
AGA						
AHA						
AIA						
AJA						
AKA						

FOREIGN PATENT DOCUMENTS

Examiner Initial	Document Number	Date	Country	Class	Subclass	Translation Yes	Translation No
ALA							
AMA							
ANA							
AOA							
APA							

OTHER ART (Including Author, Title, Date, Pertinent Pages, Etc.)

Examiner Initial

ARA Harry Newton, *Newton's Telecom Dictionary*, 16th Edition, copyright 2000, pp. 126-127.

ASA

ATA

Examiner: Date Considered:

EXAMINER: Initial if reference considered, whether or not citation is in conformance with MPEP 609; Draw line through citation if not in conformance and not considered. Include copy of this form with next communication to applicant.

::ODMA\PCDOCS\AUSTIN_1\157652\1
207:16312-P005US

PTO/SB/06 (12-04)
Approved for use through 7/31/2006. OMB 0651-0032
U.S. Patent and Trademark Office; U.S. DEPARTMENT OF COMMERCE
Under the Paperwork Reduction Act of 1995, no persons are required to respond to a collection of information unless it displays a valid OMB control number.

PATENT APPLICATION FEE DETERMINATION RECORD
Substitute for Form PTO-875

Application or Docket Number 09/775,018

APPLICATION AS FILED – PART I

FOR	(Column 1) NUMBER FILED	(Column 2) NUMBER EXTRA	SMALL ENTITY RATE ($)	SMALL ENTITY FEE ($)	OR	OTHER THAN SMALL ENTITY RATE ($)	OTHER THAN SMALL ENTITY FEE ($)
BASIC FEE (37 CFR 1.16(a), (b), or (c))							
SEARCH FEE (37 CFR 1.16(k), (i), or (m))							
EXAMINATION FEE (37 CFR 1.16(o), (p), or (q))							
TOTAL CLAIMS (37 CFR 1.16(i))	minus 20 =	*	x =		OR	x =	
INDEPENDENT CLAIMS (37 CFR 1.16(h))	minus 3 =	*	x =			x =	
APPLICATION SIZE FEE (37 CFR 1.16(s))	If the specification and drawings exceed 100 sheets of paper, the application size fee due is $250 ($125 for small entity) for each additional 50 sheets or fraction thereof. See 35 U.S.C. 41(a)(1)(G) and 37 CFR 1.16(s).						
MULTIPLE DEPENDENT CLAIM PRESENT (37 CFR 1.16(j))							
			TOTAL			TOTAL	

* If the difference in column 1 is less than zero, enter "0" in column 2.

APPLICATION AS AMENDED – PART II

8-26-04

AMENDMENT A	(Column 1) CLAIMS REMAINING AFTER AMENDMENT		(Column 2) HIGHEST NUMBER PREVIOUSLY PAID FOR	(Column 3) PRESENT EXTRA	SMALL ENTITY RATE ($)	SMALL ENTITY ADDI-TIONAL FEE ($)	OR	OTHER THAN SMALL ENTITY RATE ($)	OTHER THAN SMALL ENTITY ADDI-TIONAL FEE ($)
Total (37 CFR 1.16(j))	* 75	Minus	** 77	=	x =		OR	x =	
Independent (37 CFR 1.16(h))	* 8	Minus	*** 5	=	x =		OR	x =	
Application Size Fee (37 CFR 1.16(s))									
FIRST PRESENTATION OF MULTIPLE DEPENDENT CLAIM (37 CFR 1.16(j))							OR		
					TOTAL ADD'L FEE		OR	TOTAL ADD'L FEE	

9-27-05

AMENDMENT B	(Column 1) CLAIMS REMAINING AFTER AMENDMENT		(Column 2) HIGHEST NUMBER PREVIOUSLY PAID FOR	(Column 3) PRESENT EXTRA	RATE ($)	ADDI-TIONAL FEE ($)	OR	RATE ($)	ADDI-TIONAL FEE ($)
Total (37 CFR 1.16(j))	* 64	Minus	** 77	=	x =		OR	x =	
Independent (37 CFR 1.16(h))	* 5	Minus	*** 5	=	x =		OR	x =	
Application Size Fee (37 CFR 1.16(s))									
FIRST PRESENTATION OF MULTIPLE DEPENDENT CLAIM (37 CFR 1.16(j))							OR		
					TOTAL ADD'L FEE		OR	TOTAL ADD'L FEE	

* If the entry in column 1 is less than the entry in column 2, write "0" in column 3.
** If the "Highest Number Previously Paid For" IN THIS SPACE is less than 20, enter "20".
*** If the "Highest Number Previously Paid For" IN THIS SPACE is less than 3, enter "3".
The "Highest Number Previously Paid For" (Total or Independent) is the highest number found in the appropriate box in column 1.

This collection of information is required by 37 CFR 1.16. The information is required to obtain or retain a benefit by the public which is to file (and by the USPTO to process) an application. Confidentiality is governed by 35 U.S.C. 122 and 37 CFR 1.14. This collection is estimated to take 12 minutes to complete, including gathering, preparing, and submitting the completed application form to the USPTO. Time will vary depending upon the individual case. Any comments on the amount of time you require to complete this form and/or suggestions for reducing this burden, should be sent to the Chief Information Officer, U.S. Patent and Trademark Office, U.S. Department of Commerce, P.O. Box 1450, Alexandria, VA 22313-1450. DO NOT SEND FEES OR COMPLETED FORMS TO THIS ADDRESS. **SEND TO: Commissioner for Patents, P.O. Box 1450, Alexandria, VA 22313-1450.**

If you need assistance in completing the form, call 1-800-PTO-9199 and select option 2.

UNITED STATES PATENT AND TRADEMARK OFFICE

COMMISSIONER FOR PATENTS
UNITED STATES PATENT AND TRADEMARK OFFICE
WASHINGTON, D.C. 20231
www.uspto.gov

APPLICATION NUMBER	FILING/RECEIPT DATE	FIRST NAMED APPLICANT	ATTORNEY DOCKET NUMBER
09/775,018	02/01/2001	Eric G. Suder	16312-P005US

CONFIRMATION NO. 7490

FORMALITIES LETTER

OC000000005856003

Winstead Sechrest & Minick P.C.
Suite 800
100 Congress Avenue
Austin, TX 78701

Date Mailed: 03/13/2001

NOTICE TO FILE MISSING PARTS OF NONPROVISIONAL APPLICATION

FILED UNDER 37 CFR 1.53(b)

Filing Date Granted

An application number and filing date have been accorded to this application. The item(s) indicated below, however, are missing. Applicant is given TWO MONTHS from the date of this Notice within which to file all required items and pay any fees required below to avoid abandonment. Extensions of time may be obtained by filing a petition accompanied by the extension fee under the provisions of 37 CFR 1.136(a).

- The oath or declaration is missing.
- To avoid abandonment, a late filing fee or oath or declaration surcharge as set forth in 37 CFR 1.16(e) of $65 for a small entity in compliance with 37 CFR 1.27, must be submitted with the missing items identified in this letter.
- **The balance due by applicant is $ 65.**

The application is informal since it does not comply with the regulations for the reason(s) indicated below. Applicant is given TWO MONTHS from the date of this Notice within which to correct the informalities indicated below.

The required item(s) identified below must be timely submitted to avoid abandonment:

- Substitute drawings in compliance with 37 CFR 1.84 because:
  - drawing sheets do not have the appropriate margin(s) (see 37 CFR 1.84(g)). Each sheet must include a top margin of at least 2.5 cm. (1 inch), a left side margin of at least 2.5 cm. (1 inch), a right side margin of at least 1.5 cm. (5/8 inch), and a bottom margin of at least 1.0 cm. (3/8 inch);
  - drawings submitted to the Office are not electronically reproducible. Drawing sheets must be submitted on paper which is flexible, strong, white, smooth, non-shiny, and durable (see 37 CFR 1.84(e));

A copy of this notice MUST be returned with the reply.

Customer Service Center
Initial Patent Examination Division (703) 308-1202
PART 3 - OFFICE COPY

MC

OIPE JC179 APR 0 3 2001 PATENT & TRADEMARK OFFICE

OIPE JC APR 0 9 2001 PATENT & TRADEMARK OFFICE

$ Sector $

16312-P005US

PATENT

IN THE UNITED STATES PATENT AND TRADEMARK OFFICE

In re Application of:	Eric G. Suder et al.
Serial No.:	09/775,018
Filed:	February 1, 2001
Art Unit:	2661
Examiner:	Not Assigned
For:	QUALITY OF SERVICE IN A VOICE OVER IP TELEPHONE SYSTEM

APPLICANT'S RESPONSE TO PTO'S NOTICE TO
FILE MISSING PARTS OF NONPROVISIONAL APPLICATION

Box Missing Parts
Assistant Commissioner for Patents
Washington, D. C. 20231

Sir:

1. ☒ This replies to the Notice to File Missing Parts of Nonprovisional Application mailed March 13, 2001.

   ☒ A copy of the Notice to File Missing Parts of Nonprovisional Application is attached.

CERTIFICATION UNDER 37 C.F.R. § 1.8

I hereby certify that this correspondence (along with any item referred to as being enclosed herewith) is being deposited with the United States Postal Service with sufficient postage as first class mail in an envelope addressed to Box Missing Parts, Assistant Commissioner for Patents, Washington, D.C. 20231, on April 5, 2001.

Toni Stanley
Signature

Toni Stanley
(Printed name of person certifying)

Also attached is an executed Declaration and an executed Assignment with an Assignment Recordation.

COMPLETION FEES

3. ☒ Surcharge fee is attached in compliance with 37 CFR 1.27 (37 C.F.R. § 1.16(l).
   - ☐ $130.00 for a large entity;
   - ☒ $65.00 for a small entity.

PAYMENT OF FEES

4. ☒ Enclosed is a check in the amount of $ 65.00 (surcharge fee), and a check in the amount of $ 40.00 (assignment recordation fee).

   However, should the checks be missing or insufficient, the Commissioner is hereby authorized to charge any deficiency in fees, or credit any overpayment, to Account No. 23-2426 (16312-P005US). **A photocopy of this request is enclosed.**

   ☐ Charge Account No. _____ in the amount of $_____. **A photocopy of this request is enclosed.**

Respectfully submitted,

WINSTEAD SECHREST & MINICK P.C.

Attorneys for Applicants

By: _____

Kelly K. Kordzik
Reg. No. 36,571

100 Congress Avenue
Suite 800
Austin, Texas 78701
(512) 370-2851

::ODMA\PCDOCS\AUSTIN_1\162102\1
207:16312-P005US

OIPE JC179
APR 0 9 2001
PATENT & TRADEMARK OFFICE

UNITED STATES PATENT AND TRADEMARK OFFICE

COMMISSIONER FOR PATENTS
UNITED STATES PATENT AND TRADEMARK OFFICE
WASHINGTON, D.C. 20231
www.uspto.gov

APPLICATION NUMBER	FILING/RECEIPT DATE	FIRST NAMED APPLICANT	ATTORNEY DOCKET NUMBER
09/775,018	02/01/2001	Eric G. Suder	16312-P005US

CONFIRMATION NO. 7490

FORMALITIES LETTER

OC000000005856003

Winstead Sechrest & Minick P.C.
Suite 800
100 Congress Avenue
Austin, TX 78701

Date Mailed: 03/13/2001

NOTICE TO FILE MISSING PARTS OF NONPROVISIONAL APPLICATION

FILED UNDER 37 CFR 1.53(b)

Filing Date Granted

An application number and filing date have been accorded to this application. The item(s) indicated below, however, are missing. Applicant is given TWO MONTHS from the date of this Notice within which to file all required items and pay any fees required below to avoid abandonment. Extensions of time may be obtained by filing a petition accompanied by the extension fee under the provisions of 37 CFR 1.136(a).

- The oath or declaration is missing.
- To avoid abandonment, a late filing fee or oath or declaration surcharge as set forth in 37 CFR 1.16(e) of $65 for a small entity in compliance with 37 CFR 1.27, must be submitted with the missing items identified in this letter.
- **The balance due by applicant is $ 65.**

The application is informal since it does not comply with the regulations for the reason(s) indicated below. Applicant is given TWO MONTHS from the date of this Notice within which to correct the informalities indicated below.

The required item(s) identified below must be timely submitted to avoid abandonment:

- Substitute drawings in compliance with 37 CFR 1.84 because:
  - drawing sheets do not have the appropriate margin(s) (see 37 CFR 1.84(g)). Each sheet must include a top margin of at least 2.5 cm. (1 inch), a left side margin of at least 2.5 cm. (1 inch), a right side margin of at least 1.5 cm. (5/8 inch), and a bottom margin of at least 1.0 cm. (3/8 inch);
  - drawings submitted to the Office are not electronically reproducible. Drawing sheets must be submitted on paper which is flexible, strong, white, smooth, non-shiny, and durable (see 37 CFR 1.84(e));

04/11/2001 SDENBOB1 00000050 09775018

01 FC:205 65.00 OP

OIPE
APR 0 9 2001
PATENT & TRADEMARK OFFICE

*A copy of this notice **MUST** be returned with the reply.*

Customer Service Center
Initial Patent Examination Division (703) 308-1202
PART 2 - COPY TO BE RETURNED WITH RESPONSE

OIPE JC179
APR 0 9 2001
PATENT & TRADEMARK OFFICE

#3

16312-P005US

PATENT

DECLARATION AND POWER OF ATTORNEY FOR PATENT APPLICATION

As a below named inventor, I hereby declare that:

My residence, post office address and citizenship are as stated below next to my name;

I believe I am the original, first and sole inventor (if only one name is listed below) or an original, first and joint inventor (if plural names are listed below) of the subject matter which is claimed and for which a patent is sought on the invention entitled

QUALITY OF SERVICE IN A VOICE OVER IP TELEPHONE SYSTEM

the specification of which (check one)

☐ is attached hereto.

☒ was filed on February 1, 2001
as Application Serial No. 09/775,018
and was amended on _____

I hereby state that I have reviewed and understand the contents of the above identified specification, including the claims, as amended by any amendment referred to above.

I acknowledge the duty to disclose information which is material to the patentability of this application in accordance with Title 37, Code of Federal Regulations, §1.56.

I hereby claim foreign priority benefits under Title 35, United States Code, §119 of any foreign application(s) for patent or inventor's certificate listed below and have also identified below any foreign application for patent or inventor's certificate having a filing date before that of the application on which priority is claimed:

Prior Foreign Application(s):			Priority Claimed
_____	_____	_____	☐ Yes ☐ No
(Number)	(Country)	(Day/Month/Year)	

I hereby claim the benefit under Title 35, United States Code, §120 of any United States application(s) listed below and, insofar as the subject matter of each of the claims of this application is not disclosed in the prior United States application in the manner provided by the first paragraph of Title 35, United States Code, §112, I acknowledge the duty to disclose information material to the patentability of this application as defined in Title 37, Code of Federal Regulations, §1.56 which occurred between the filing date of the prior application and the national or PCT international filing date of this application:

(Application Serial #)	(Filing Date)	(Status)
(Application Serial #)	(Filing Date)	(Status)

I hereby declare that all statements made herein of my own knowledge are true and that all statements made on information and belief are believed to be true; and further that these statements were made with the knowledge that willful false statements and the like so made are punishable by fine or imprisonment, or both, under Section 1001 of Title 18 of the United States Code and that such willful false statements may jeopardize the validity of the application or any patent issued thereon.

POWER OF ATTORNEY: As a named inventor, I hereby appoint the following attorneys and/or agents to prosecute this application and to transact all business in the Patent and Trademark Office connected therewith and to file and prosecute any international patent applications filed thereon before any international authorities under the Patent Cooperation Treaty.

Richard Frankeny, Reg. No. P-47,573; Kelly K. Kordzik, Reg. No. 36,571; Barry S. Newberger, Reg. No. 41,527; Robert A. Voigt, Jr., Reg. No. 47,159.

Send correspondence to: Kelly K. Kordzik, 100 Congress Avenue, Suite 800, Austin, Texas 78701, and direct all telephone calls to Kelly K. Kordzik, (512) 370-2851.

FULL NAME OF FIRST OR SOLE INVENTOR: **ERIC G. SUDER**

INVENTOR'S SIGNATURE: _____ DATE: 2/1/2001

RESIDENCE: **4637 Gladys Court**
Plano, Collin County, Texas 75093

CITIZENSHIP: **U.S.A.**

POST OFFICE ADDRESS: **(Same as Residence)**

FULL NAME OF SECOND INVENTOR: **HAROLD E.A. HANSEN II**

INVENTOR'S SIGNATURE: _____ DATE: 2/1/2001

RESIDENCE: **3300 Hidden Cove Drive**
Plano, Collin County, Texas 75075

CITIZENSHIP: **U.S.A.**

POST OFFICE ADDRESS: **(Same as Residence)**

::ODMA\PCDOCS\AUSTIN_1\157342\1
207:16312-P005US

OIPE JC11
APR 09 2001
PATENT & TRADEMARK OFFICE

2661
#4

16312-P005US

PATENT

IN THE UNITED STATES PATENT AND TRADEMARK OFFICE

RECEIVED
APR 12 2001
Technology Center 2600

In re Application:	Eric G. Suder et al.
Serial No.:	09/775,018
Filed:	February 1, 2001
Art Unit:	2661
Examiner:	Not assigned
For:	QUALITY OF SERVICE IN A VOICE OVER IP TELEPHONE SYSTEM

SUPPLEMENTAL INFORMATION DISCLOSURE STATEMENT

Assistant Commissioner for Patents
Washington, D.C. 20231

Dear Sir:

This Information Disclosure Statement is being submitted in connection with the above-identified application for patent. Applicant submits herewith patents, publications or other information of which he is aware, which he believes may be material to the patentability of this

---

CERTIFICATION UNDER 37 C.F.R. § 1.8

I hereby certify that this correspondence (along with any item referred to as being enclosed herewith) is being deposited with the United States Postal Service with sufficient postage as first class mail in an envelope addressed to the Assistant Commissioner for Patents, Washington, D.C. 20231, on April 5, 2001.

Toni Stanley
Signature

Toni Stanley
(Printed name of person certifying)

application and in respect of which there may be a duty to disclose in accordance with 37 C.F.R. § 1.56.

While this Information Disclosure Statement may be "material" pursuant to 37 C.F.R. § 1.56, it is not intended to constitute an admission that any patent, publication or other information referred to herein is "prior art" for this invention unless specifically designated as such.

In accordance with 37 C.F.R. § 1.97(g), the filing of this Information Disclosure Statement shall not be construed to mean that a search has been made or that no other material information as defined in 37 C.F.R. § 1.56(a) exists.

The attached form, PTO-1449, provides a listing of patents, publications, or other information as required by 37 C.F.R. § 1.98(a)(1).

A copy of the items identified on the attached Form PTO-1449 is supplied herewith.

Respectfully submitted,

WINSTEAD SECHREST & MINICK P.C.

Attorneys for Applicants

By:_____

Kelly K. Kordzik
Reg. No. 36,571

100 Congress Avenue
Suite 800
Austin, Texas 78701
(512) 370-2851

::ODMA\PCDOCS\AUSTIN_1\160508\1
207:16312-P005US

UNITED STATES PATENT AND TRADEMARK OFFICE

COMMISSIONER FOR PATENTS
UNITED STATES PATENT AND TRADEMARK OFFICE
WASHINGTON, D.C. 20231
www.uspto.gov

APPLICATION NUMBER	FILING/RECEIPT DATE	FIRST NAMED APPLICANT	ATTORNEY DOCKET NUMBER
09/775,018	02/01/2001	Eric G. Suder	16312-P005US

CONFIRMATION NO. 7490

FORMALITIES LETTER

OC000000006094827

Kelly K. Kordzik
Suite 800
100 Congress Avenue
Austin, TX 78701

Date Mailed: 05/18/2001

NOTICE OF INCOMPLETE REPLY (NONPROVISIONAL)

Filing Date Granted

The U.S. Patent and Trademark Office has received your reply on to the Notice mailed and it has been entered into the nonprovisional application. The reply, however, doesnot include the following items required in the Notice.

The period of reply remains as set forth in the Notice. You may,however, obtain EXTENSIONS OF TIME under the provisions of 37 CFR 1.136 (a)accompanied by the appropriate fee (37 CFR 1.17(a)).

A complete reply must be timely filed to prevent ABANDONMENT of the above-identified application.

- Substitute drawings in compliance with 37 CFR 1.84 because:
  - drawing sheets do not have the appropriate margin(s) (see 37 CFR 1.84(g)). Each sheet must include a top margin of at least 2.5 cm. (1 inch), a left side margin of at least 2.5 cm. (1 inch), a right side margin of at least 1.5 cm. (5/8 inch), and a bottom margin of at least 1.0 cm. (3/8 inch);
  - drawings submitted to the Office are not electronically reproducible. Drawing sheets must be submitted on paper which is flexible, strong, white, smooth, non-shiny, and durable (see 37 CFR 1.84(e));

A copy of this notice MUST be returned with the reply.

Customer Service Center
Initial Patent Examination Division (703) 308-1202
PART 3 - OFFICE COPY

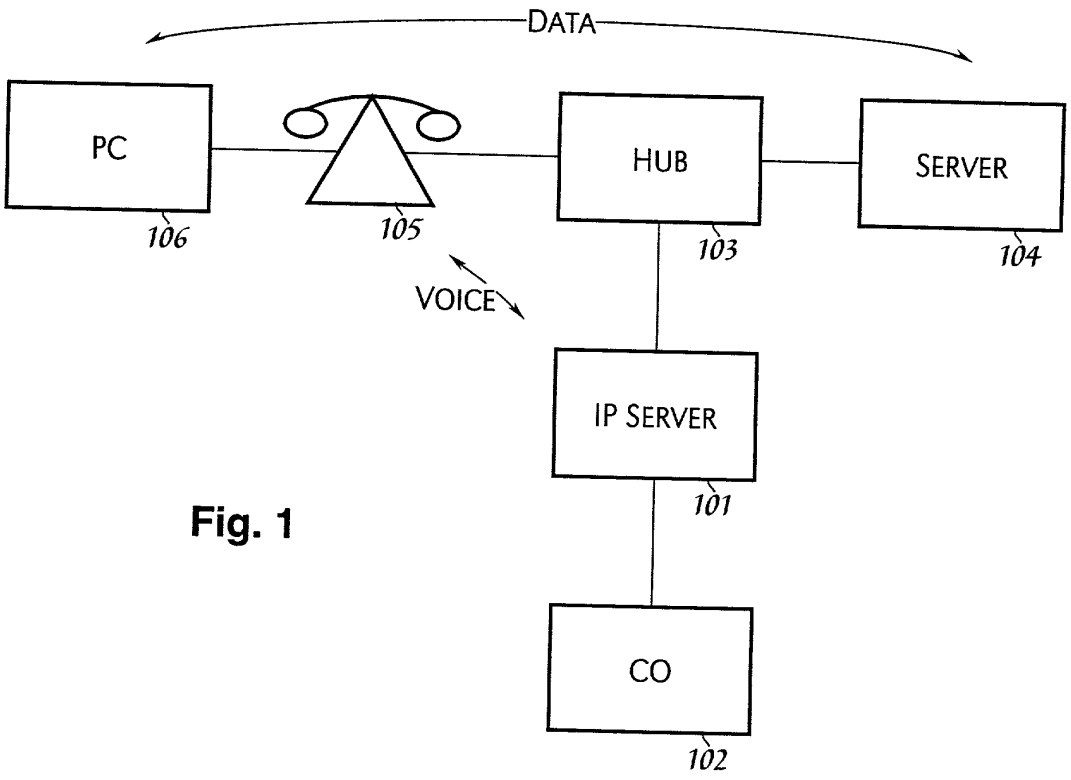
DATA
PC
106
105
HUB
103
SERVER
104
VOICE
IP SERVER
101
CO
102

Fig. 1

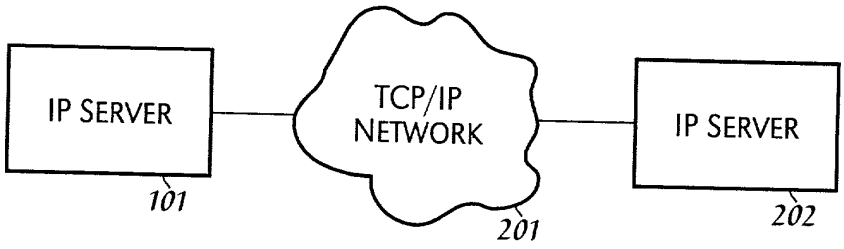
IP SERVER
101
TCP/IP
NETWORK
201
IP SERVER
202

Fig. 2

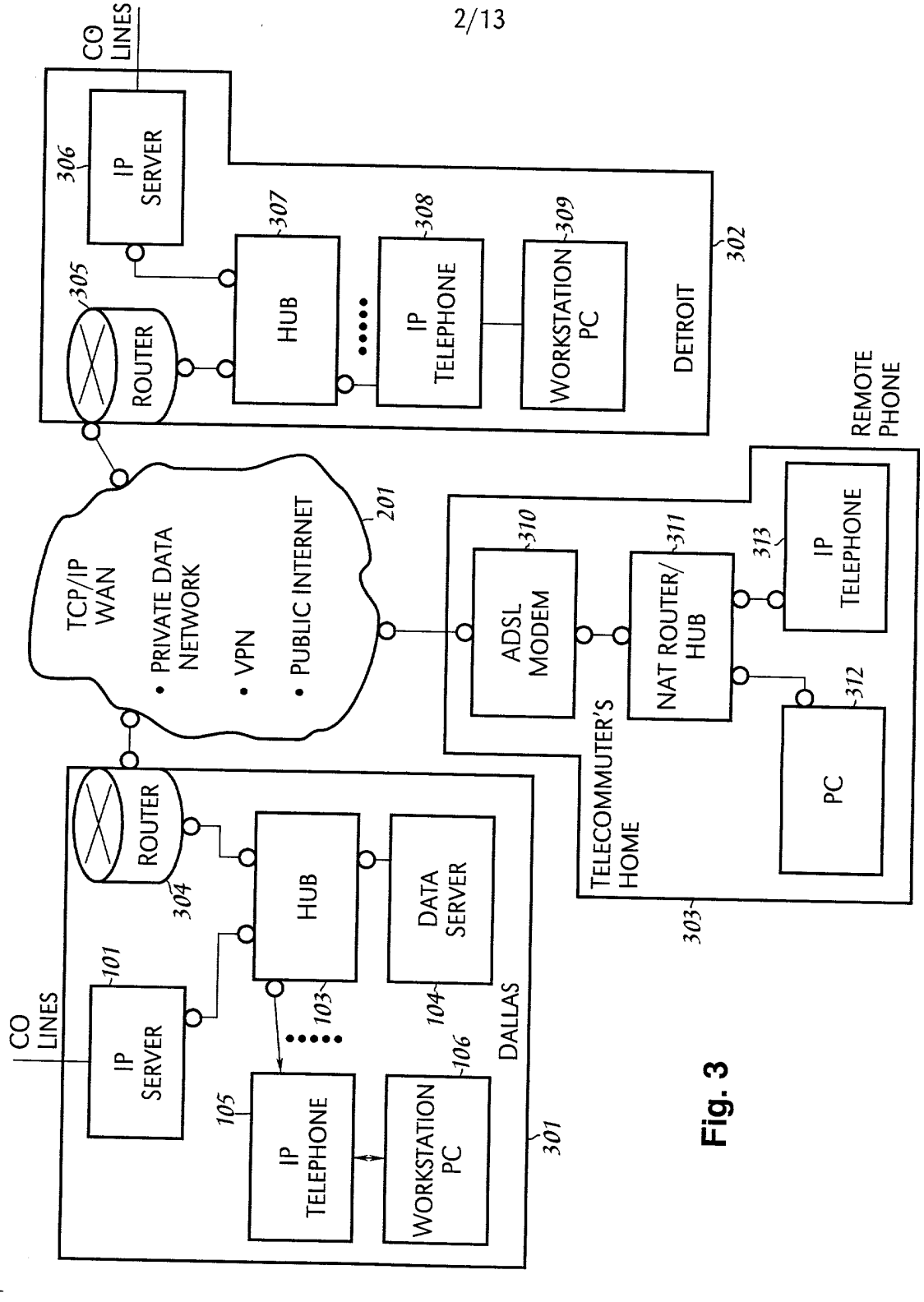
CO LINES
IP SERVER
306
ROUTER
305
HUB
307
IP TELEPHONE
308
WORKSTATION PC
309
DETROIT
302
TCP/IP WAN
• PRIVATE DATA NETWORK
• VPN
• PUBLIC INTERNET
201
ADSL MODEM
310
NAT ROUTER/ HUB
311
IP TELEPHONE
313
PC
312
REMOTE PHONE
TELECOMMUTER'S HOME
303
ROUTER
304
HUB
DATA SERVER
CO LINES
IP SERVER
101
103
104
105
106
IP TELEPHONE
WORKSTATION PC
DALLAS
301

Fig. 3

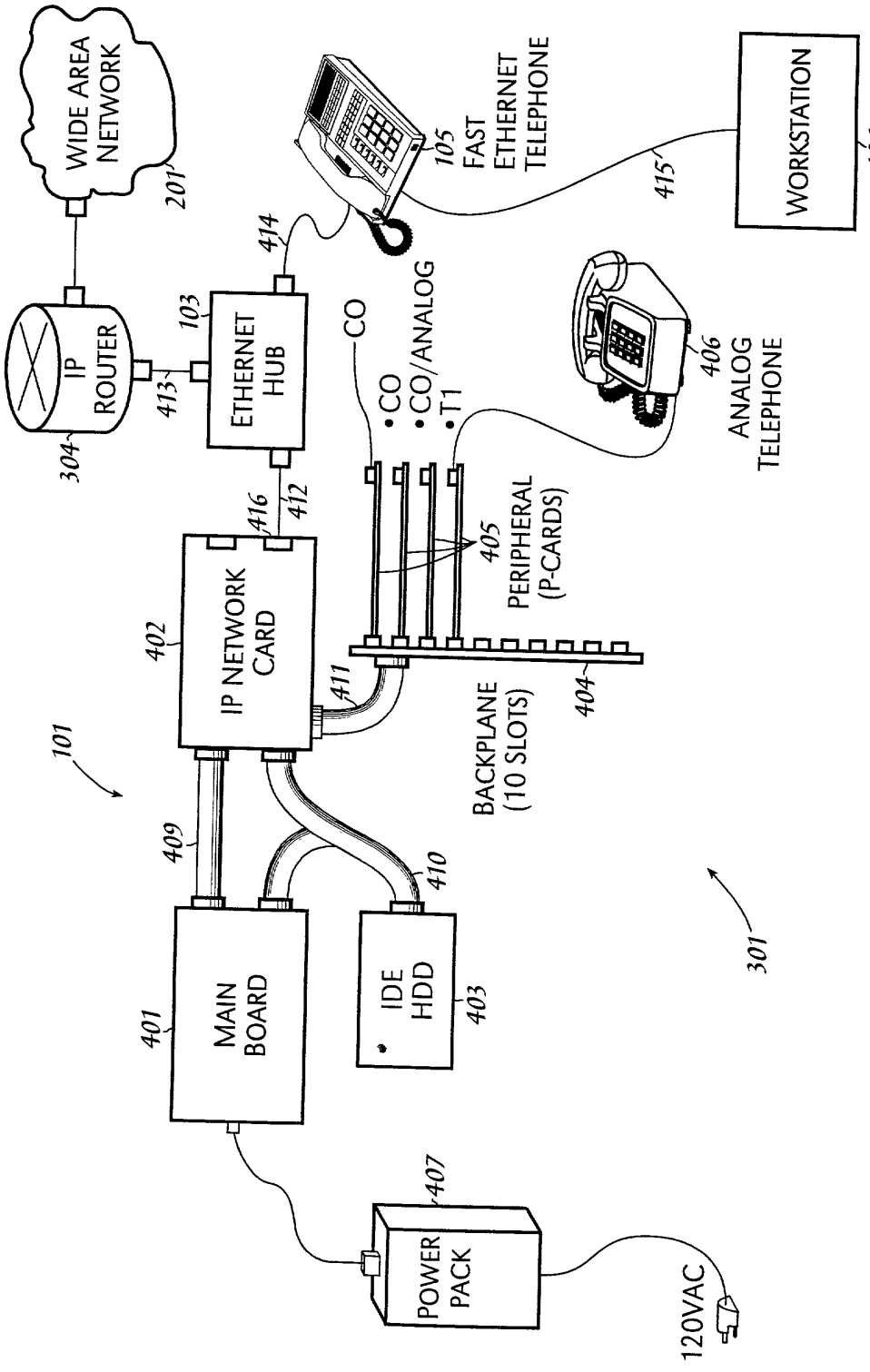
WIDE AREA NETWORK
201
105
FAST ETHERNET TELEPHONE
WORKSTATION
106
415
414
IP ROUTER
304
103
ETHERNET HUB
413
CO
•CO
•CO/ANALOG
•T1
406
ANALOG TELEPHONE
416
412
405
PERIPHERAL (P-CARDS)
402
IP NETWORK CARD
411
BACKPLANE (10 SLOTS)
404
101
409
410
MAIN BOARD
401
IDE HDD
403
301
407
POWER PACK
120VAC

Fig. 4

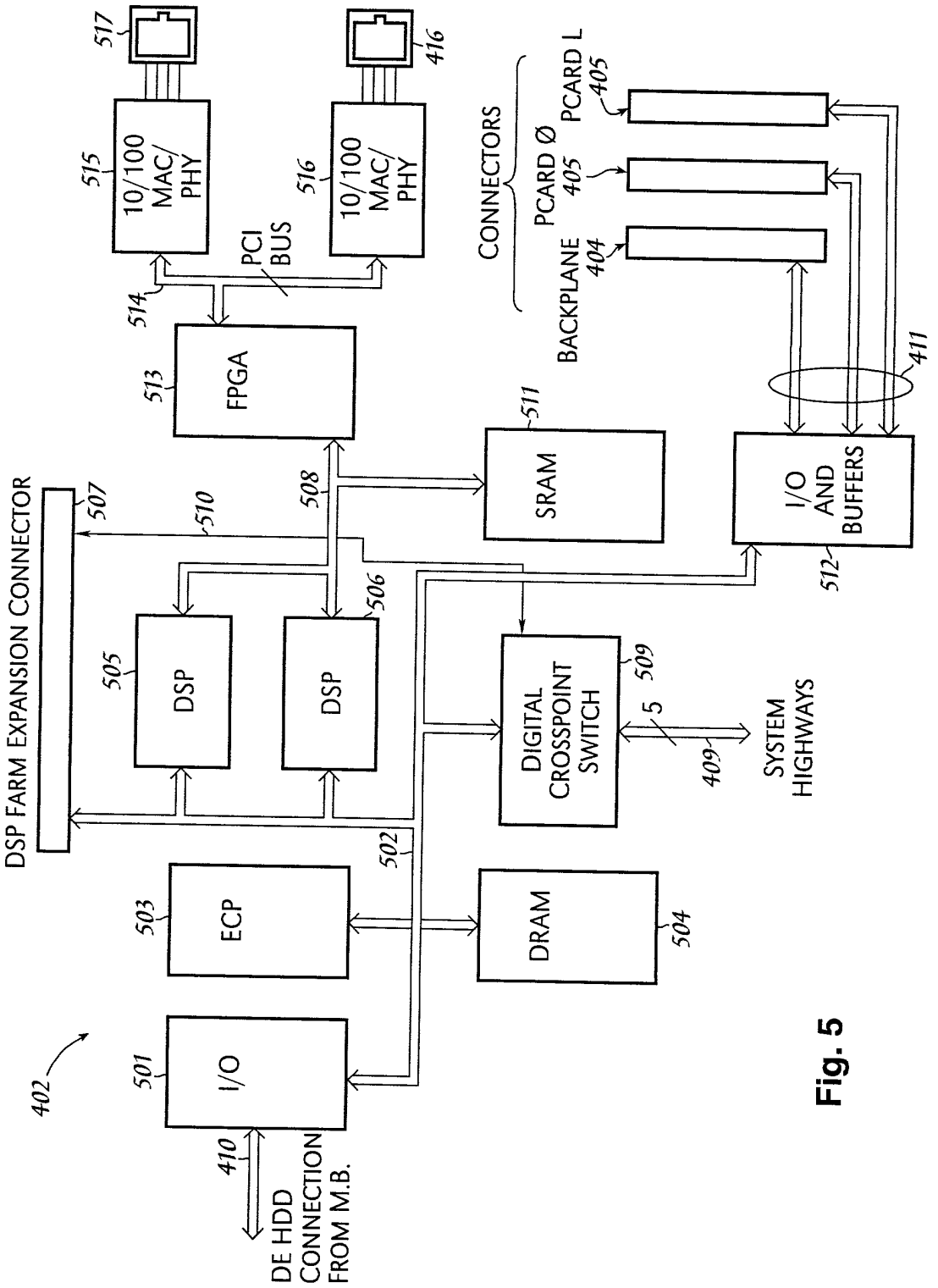
517
416
515
10/100 MAC/ PHY
516
10/100 MAC/ PHY
PCI BUS
514
513
FPGA
CONNECTORS
PCARD Ø
405
PCARD L
405
BACKPLANE
404
411
511
SRAM
I/O AND BUFFERS
512
DSP FARM EXPANSION CONNECTOR
507
510
508
505
DSP
DSP
506
DIGITAL CROSSPOINT SWITCH
509
5
409
SYSTEM HIGHWAYS
502
503
ECP
DRAM
504
402
501
I/O
410
DE HDD CONNECTION FROM M.B.

Fig. 5

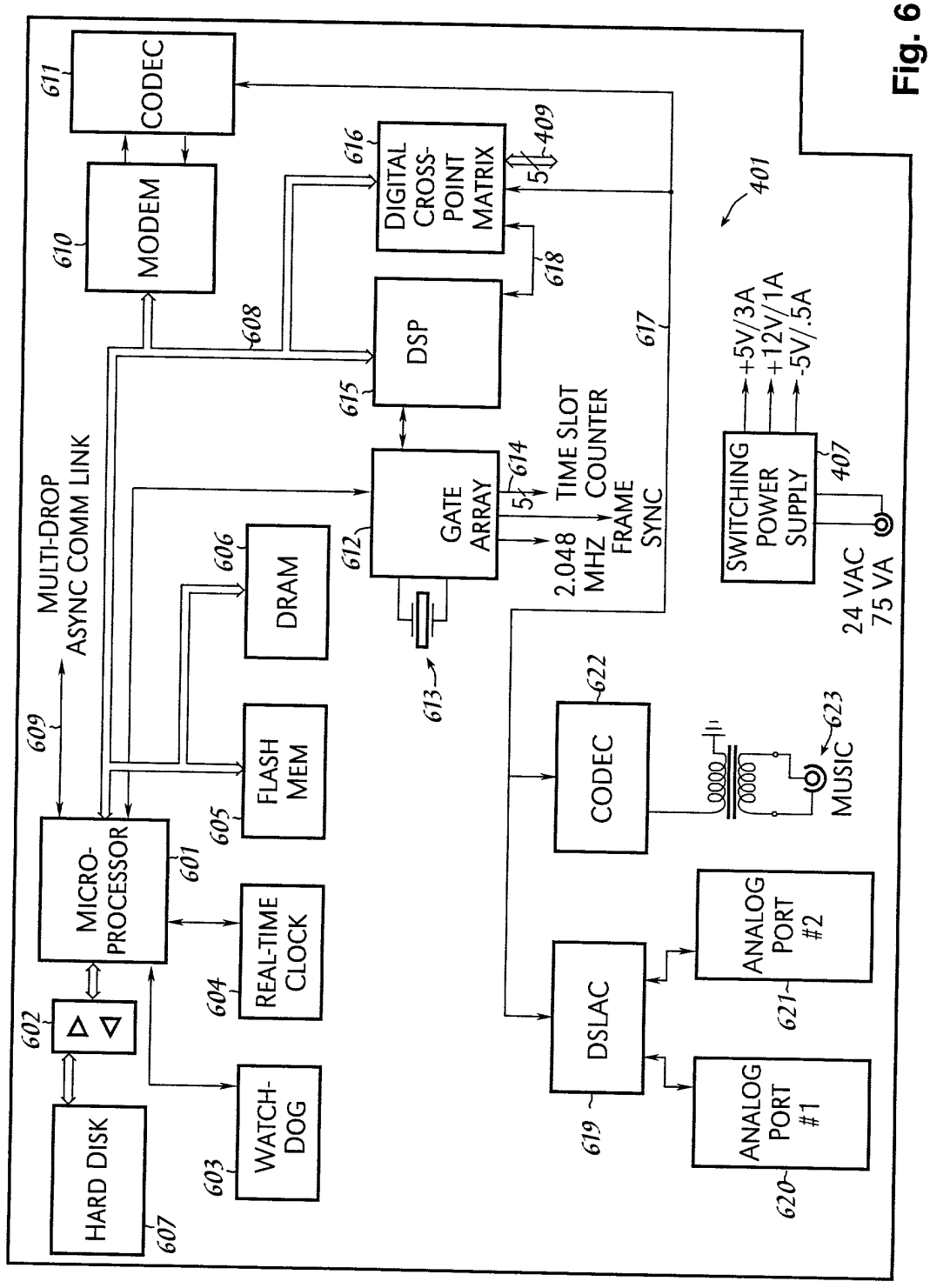
CODEC
611
MODEM
610
DIGITAL CROSS-POINT MATRIX
616
409
401
DSP
615
608
618
617
MULTI-DROP ASYNC COMM LINK
609
DRAM
606
GATE ARRAY
612
614
TIME SLOT COUNTER
FRAME SYNC
2.048 MHZ
613
+5V/3A
+12V/1A
-5V/.5A
SWITCHING POWER SUPPLY
407
24 VAC
75 VA
FLASH MEM
605
CODEC
622
MUSIC
623
MICRO-PROCESSOR
601
REAL-TIME CLOCK
604
602
DSLAC
619
ANALOG PORT #2
621
HARD DISK
607
WATCH-DOG
603
ANALOG PORT #1
620

Fig. 6

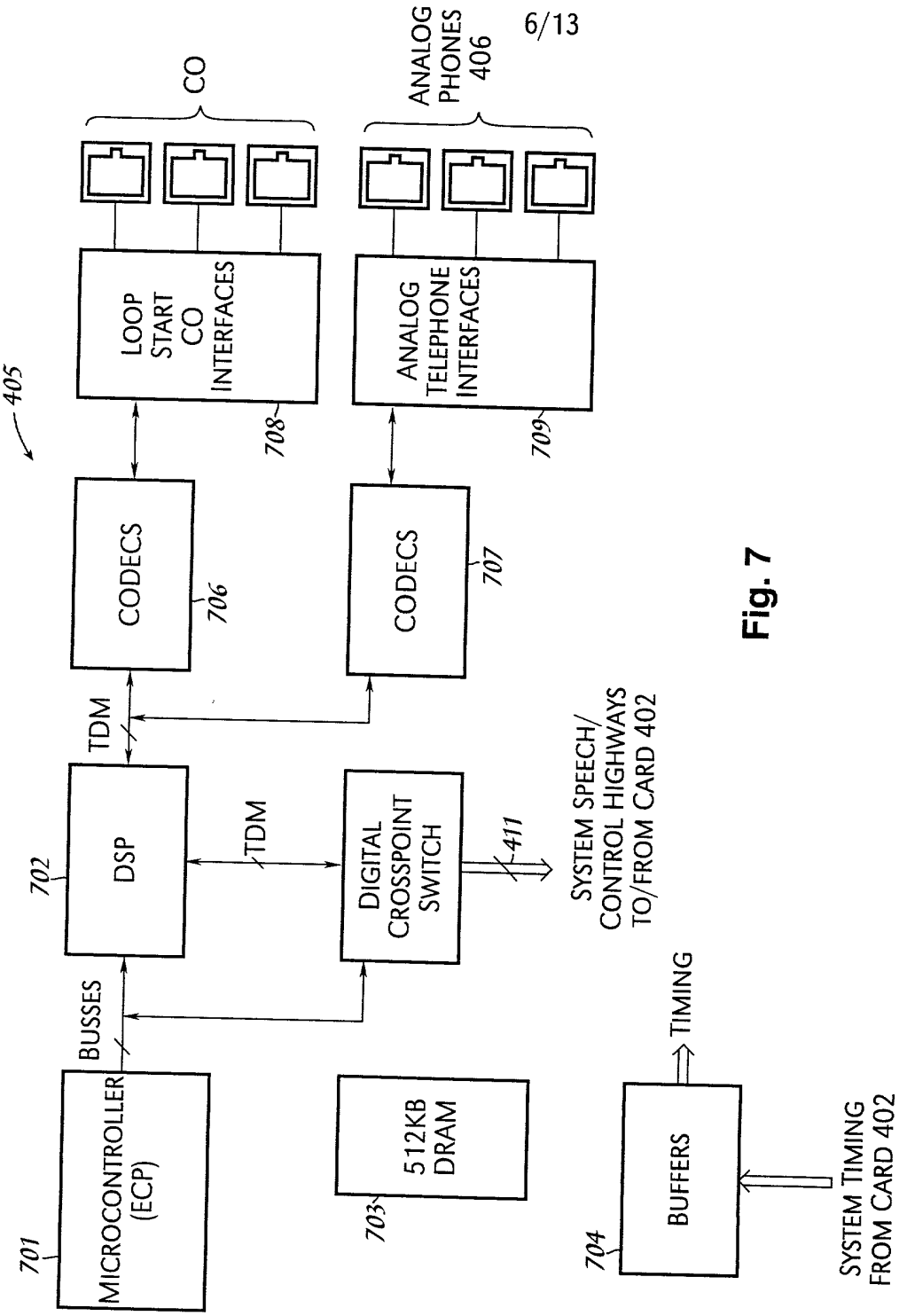
405
CO
ANALOG PHONES 406
LOOP START CO INTERFACES
708
ANALOG TELEPHONE INTERFACES
709
CODECS
706
CODECS
707
TDM
DSP
702
TDM
DIGITAL CROSSPOINT SWITCH
411
SYSTEM SPEECH/ CONTROL HIGHWAYS TO/FROM CARD 402
BUSSES
MICROCONTROLLER (ECP)
701
512KB DRAM
703
TIMING
BUFFERS
704
SYSTEM TIMING FROM CARD 402

Fig. 7

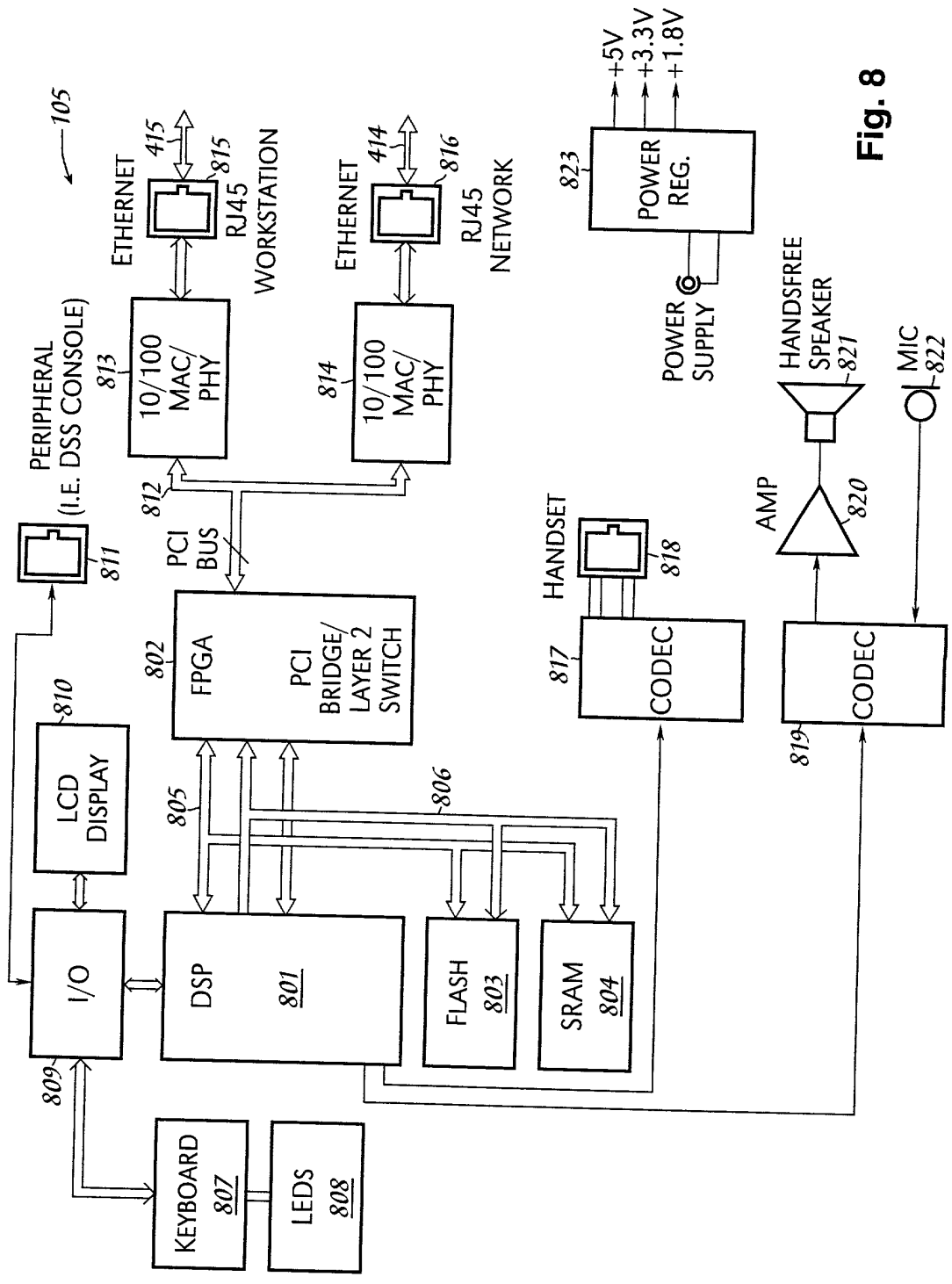
105
PERIPHERAL (I.E. DSS CONSOLE)
811
812
PCI BUS
ETHERNET
415
RJ45 WORKSTATION
815
ETHERNET
414
RJ45 NETWORK
816
10/100 MAC/ PHY
813
10/100 MAC/ PHY
814
+5V
+3.3V
+1.8V
POWER REG.
823
POWER SUPPLY
HANDSFREE SPEAKER
821
MIC
822
AMP
820
HANDSET
818
CODEC
817
CODEC
819
FPGA
802
PCI BRIDGE/ LAYER 2 SWITCH
LCD DISPLAY
810
805
806
I/O
DSP
801
FLASH
803
SRAM
804
809
KEYBOARD
807
LEDS
808

Fig. 8

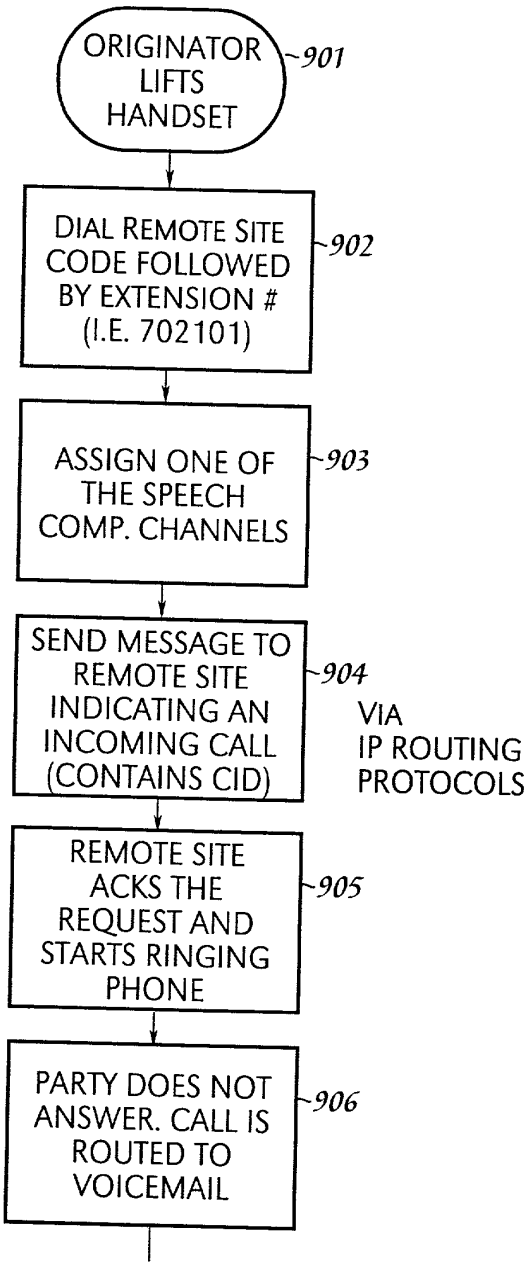
ORIGINATOR LIFTS HANDSET
901
DIAL REMOTE SITE CODE FOLLOWED BY EXTENSION # (I.E. 702101)
902
ASSIGN ONE OF THE SPEECH COMP. CHANNELS
903
SEND MESSAGE TO REMOTE SITE INDICATING AN INCOMING CALL (CONTAINS CID)
904
VIA IP ROUTING PROTOCOLS
REMOTE SITE ACKS THE REQUEST AND STARTS RINGING PHONE
905
PARTY DOES NOT ANSWER. CALL IS ROUTED TO VOICEMAIL
906

Fig. 9

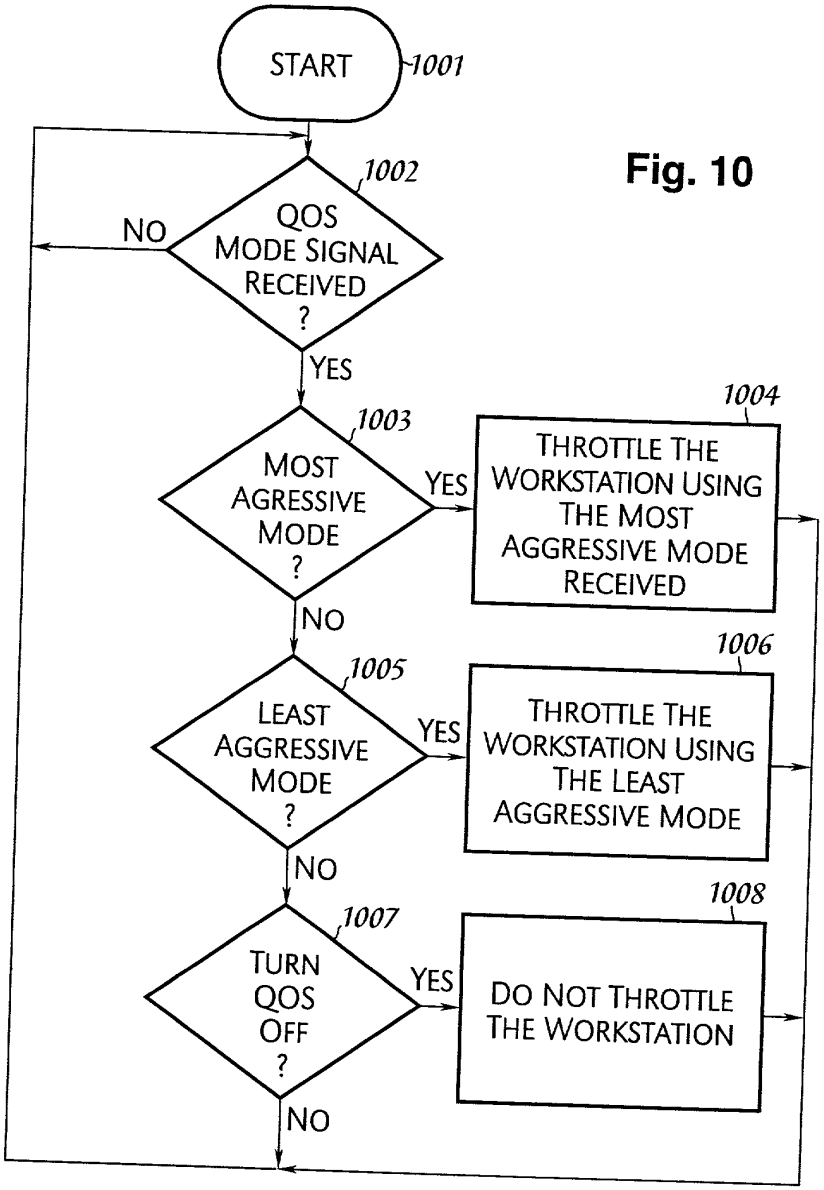
START
1001
1002
QOS MODE SIGNAL RECEIVED ?
NO
YES
1003
MOST AGRESSIVE MODE ?
YES
1004
THROTTLE THE WORKSTATION USING THE MOST AGGRESSIVE MODE RECEIVED
NO
1005
LEAST AGGRESSIVE MODE ?
YES
1006
THROTTLE THE WORKSTATION USING THE LEAST AGGRESSIVE MODE
NO
1007
TURN QOS OFF ?
YES
1008
DO NOT THROTTLE THE WORKSTATION
NO

Fig. 10

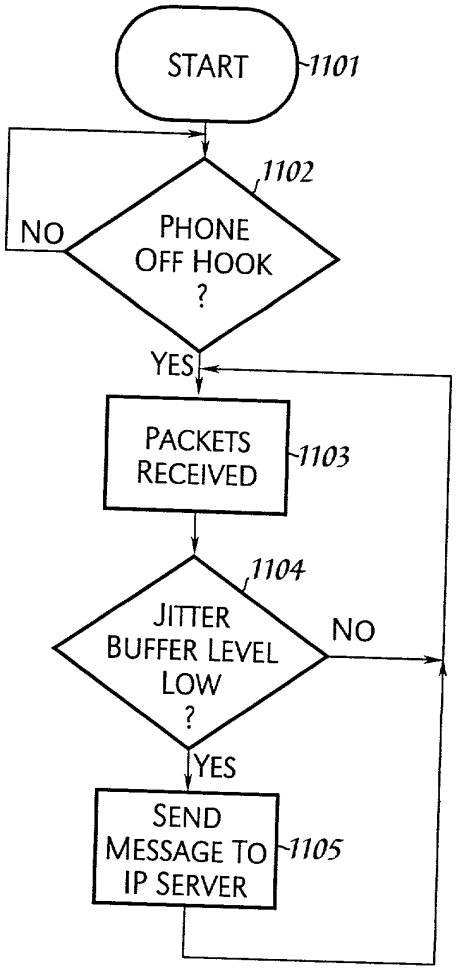
START
1101
1102
NO
PHONE OFF HOOK ?
YES
PACKETS RECEIVED
1103
1104
JITTER BUFFER LEVEL LOW ?
NO
YES
SEND MESSAGE TO IP SERVER
1105

Fig. 11

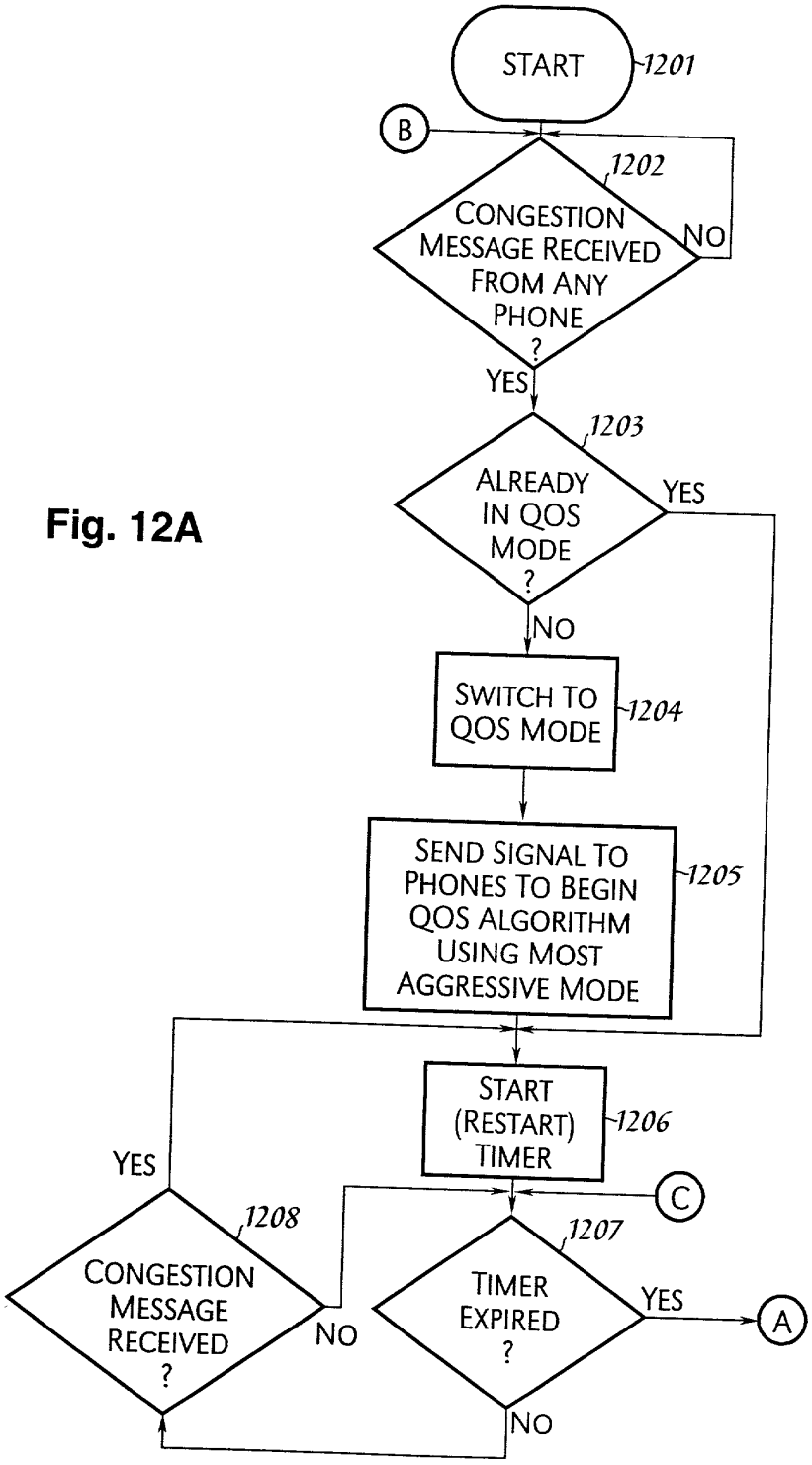
START
1201
B
1202
CONGESTION MESSAGE RECEIVED FROM ANY PHONE ?
NO
YES
1203
ALREADY IN QOS MODE ?
YES
NO
SWITCH TO QOS MODE
1204
SEND SIGNAL TO PHONES TO BEGIN QOS ALGORITHM USING MOST AGGRESSIVE MODE
1205
START (RESTART) TIMER
1206
C
YES
1208
CONGESTION MESSAGE RECEIVED ?
NO
1207
TIMER EXPIRED ?
YES
A
NO

Fig. 12A

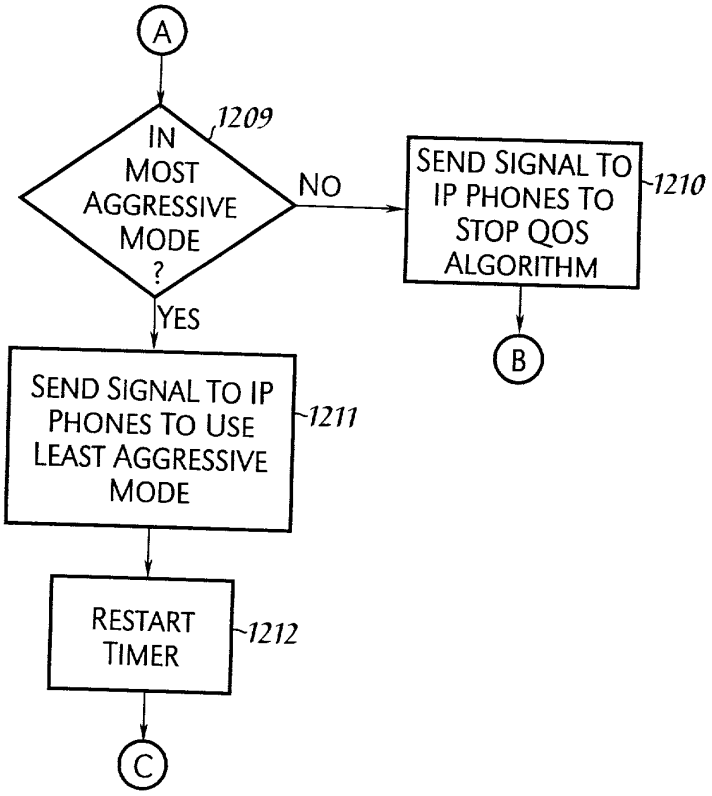
A
1209
IN MOST AGGRESSIVE MODE ?
NO
SEND SIGNAL TO IP PHONES TO STOP QOS ALGORITHM
1210
B
YES
SEND SIGNAL TO IP PHONES TO USE LEAST AGGRESSIVE MODE
1211
RESTART TIMER
1212
C

Fig. 12B

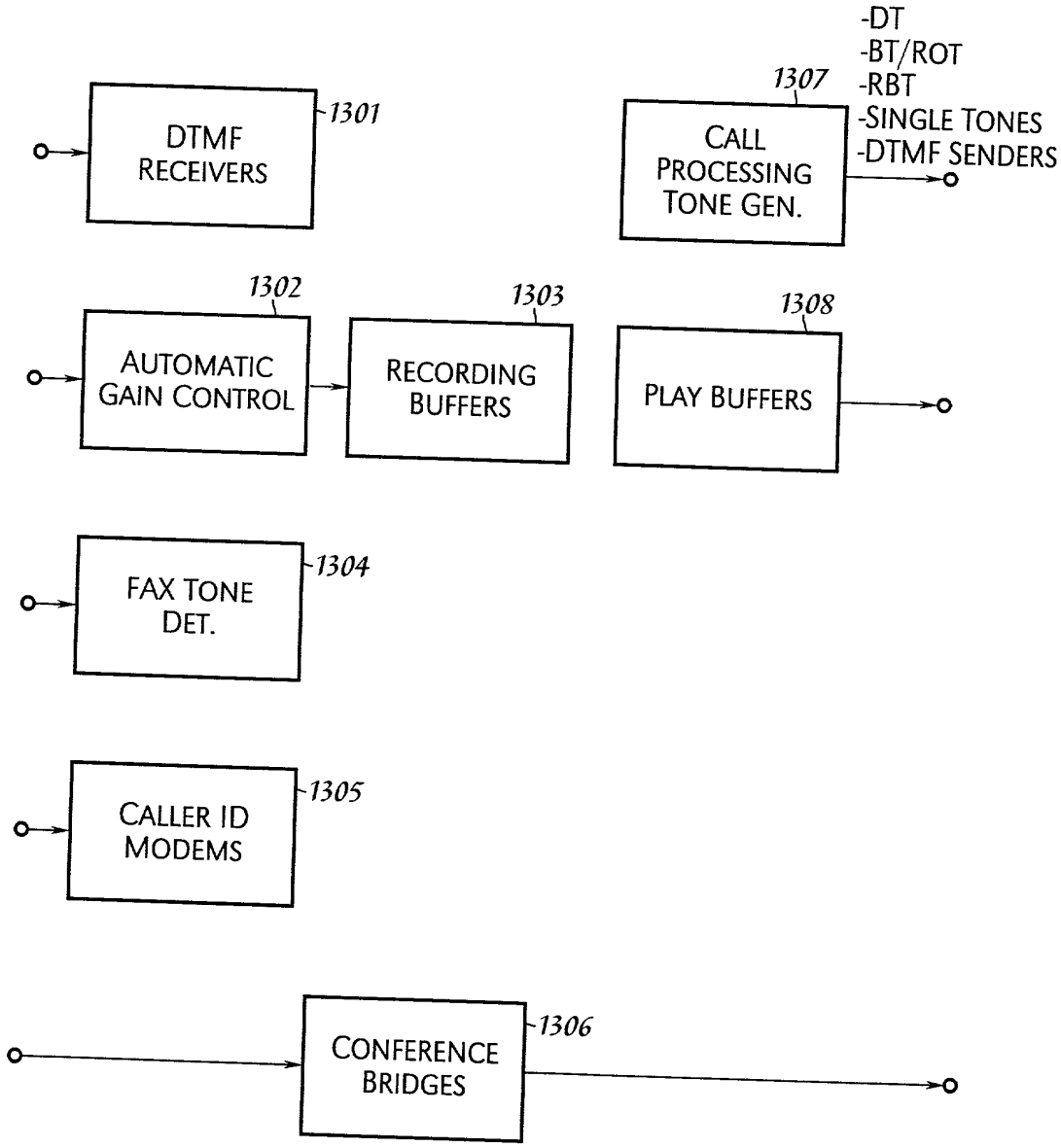
DTMF RECEIVERS
1301
CALL PROCESSING TONE GEN.
1307
-DT
-BT/ROT
-RBT
-SINGLE TONES
-DTMF SENDERS
AUTOMATIC GAIN CONTROL
1302
RECORDING BUFFERS
1303
PLAY BUFFERS
1308
FAX TONE DET.
1304
CALLER ID MODEMS
1305
CONFERENCE BRIDGES
1306

Fig. 13

O P E
JUN 1 8 2001
JC97
TRADEMARK OFFICE

H-A

0300

16312-P005US

PATENT

IN THE UNITED STATES PATENT AND TRADEMARK OFFICE

In re Application of:	Eric G. Suder et al.
Serial No.:	09/775,018
Filed:	February 1, 2001
Art Unit:	2661
Examiner:	Not Assigned
For:	QUALITY OF SERVICE IN A VOICE OVER IP TELEPHONE SYSTEM

APPLICANT'S RESPONSE TO
PTO'S NOTICE OF INCOMPLETE REPLY (NONPROVISIONAL)

Assistant Commissioner for Patents
Washington, D. C. 20231

Sir:

1. ☒ This replies to the Notice of Incomplete Reply (Nonprovisional) mailed May 18, 2001 regarding the Notice to File Missing Parts of Nonprovisional Application mailed March 13, 2001.

   ☒ A copy of the Notice of Incomplete Reply (Nonprovisional) is attached.

CERTIFICATION UNDER 37 C.F.R. § 1.8

I hereby certify that this correspondence (along with any item referred to as being enclosed herewith) is being deposited with the United States Postal Service with sufficient postage as first class mail in an envelope addressed to Assistant Commissioner for Patents, Washington, D.C. 20231, on June 13, 2001.

Serena Beller
Signature

Serena Beller
(Printed name of person certifying)

DRAWINGS

2. ☒ Enclosed are THIRTEEN (13) sheets of formal drawings that have the appropriate margin(s) in compliance with 37 C.F.R. § 1.84(g).

PAYMENT OF FEES

3. ☐ Enclosed is a check in the amount of $_____ (Surcharge fee) and a check for $_____ (Drawings).

☒ Applicant believes no fees are due at this time. However, should any fees be required, the Commissioner is hereby authorized to charge any deficiency in fees, or credit any overpayment, to Account No. 23-2426 (16312-P005US). **A photocopy of this request is enclosed.**

☐ Charge Account No. _____ in the amount of $_____. **A photocopy of this request is enclosed.**

Respectfully submitted,

WINSTEAD SECHREST & MINICK P.C.

Attorney for Applicants

By:_____

Kelly K. Kordzik

Reg. No. 36,571

5400 Renaissance Tower
1201 Elm Street
Dallas, Texas 75270
(512) 370-2851

::ODMA\PCDOCS\AUSTIN_1\166983\1
207:16312-P005US

OIPE JC97 JUN 18 2001 PATENT & TRADEMARK OFFICE

UNITED STATES PATENT AND TRADEMARK OFFICE

COMMISSIONER FOR PATENTS
UNITED STATES PATENT AND TRADEMARK OFFICE
WASHINGTON, D.C. 20231
www.uspto.gov

APPLICATION NUMBER	FILING/RECEIPT DATE	FIRST NAMED APPLICANT	ATTORNEY DOCKET NUMBER
09/775,018	02/01/2001	Eric G. Suder	16312-P005US

CONFIRMATION NO. 7490

FORMALITIES LETTER

OC000000006094827

Kelly K. Kordzik
Suite 800
100 Congress Avenue
Austin, TX 78701

Date Mailed: 05/18/2001

NOTICE OF INCOMPLETE REPLY (NONPROVISIONAL)

Filing Date Granted

The U.S. Patent and Trademark Office has received your reply on to the Notice mailed and it has been entered into the nonprovisional application. The reply, however, doesnot include the following items required in the Notice.

The period of reply remains as set forth in the Notice. You may,however, obtain EXTENSIONS OF TIME under the provisions of 37 CFR 1.136 (a)accompanied by the appropriate fee (37 CFR 1.17(a)).

A complete reply must be timely filed to prevent ABANDONMENT of the above-identified application.

- Substitute drawings in compliance with 37 CFR 1.84 because:
  - drawing sheets do not have the appropriate margin(s) (see 37 CFR 1.84(g)). Each sheet must include a top margin of at least 2.5 cm. (1 inch), a left side margin of at least 2.5 cm. (1 inch), a right side margin of at least 1.5 cm. (5/8 inch), and a bottom margin of at least 1.0 cm. (3/8 inch);
  - drawings submitted to the Office are not electronically reproducible. Drawing sheets must be submitted on paper which is flexible, strong, white, smooth, non-shiny, and durable (see 37 CFR 1.84(e));

A copy of this notice MUST be returned with the reply.

Customer Service Center
Initial Patent Examination Division (703) 308-1202
PART 2 - COPY TO BE RETURNED WITH RESPONSE

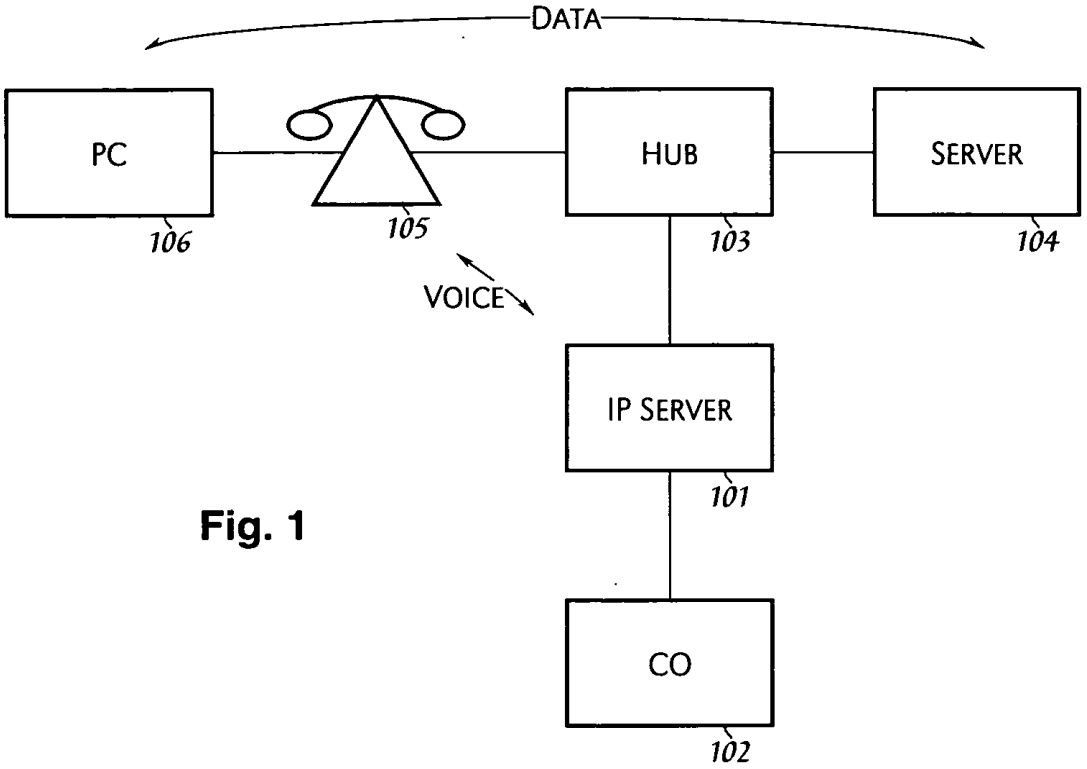
DATA
PC
106
105
HUB
103
SERVER
104
VOICE
IP SERVER
101
CO
102

Fig. 1

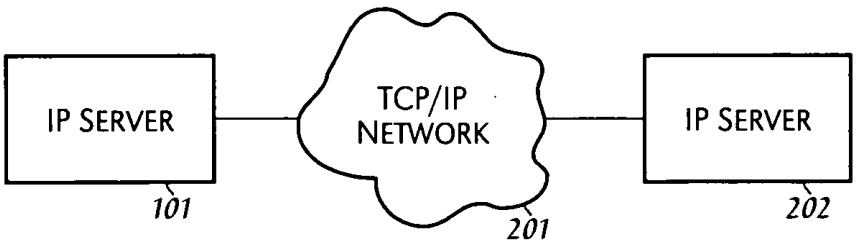
IP SERVER
101
TCP/IP
NETWORK
201
IP SERVER
202

Fig. 2

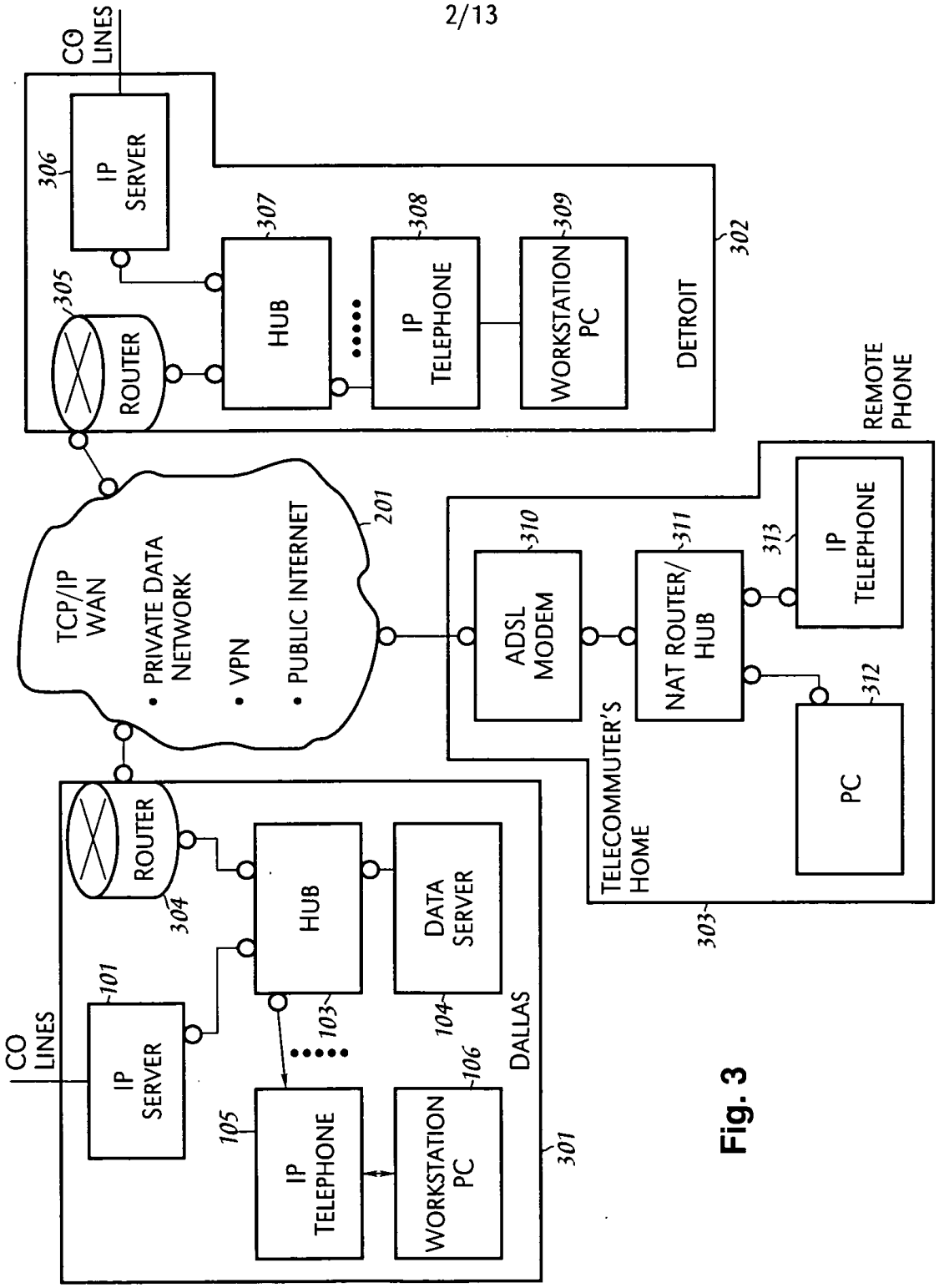
CO LINES
306
IP SERVER
307
HUB
308
IP TELEPHONE
309
WORKSTATION PC
305
ROUTER
DETROIT
302
TCP/IP WAN
• PRIVATE DATA NETWORK
• VPN
• PUBLIC INTERNET
201
310
ADSL MODEM
311
NAT ROUTER/ HUB
313
IP TELEPHONE
312
PC
TELECOMMUTER'S HOME
303
REMOTE PHONE
304
ROUTER
HUB
DATA SERVER
101
CO LINES
IP SERVER
103
104
105
IP TELEPHONE
106
WORKSTATION PC
DALLAS
301

Fig. 3

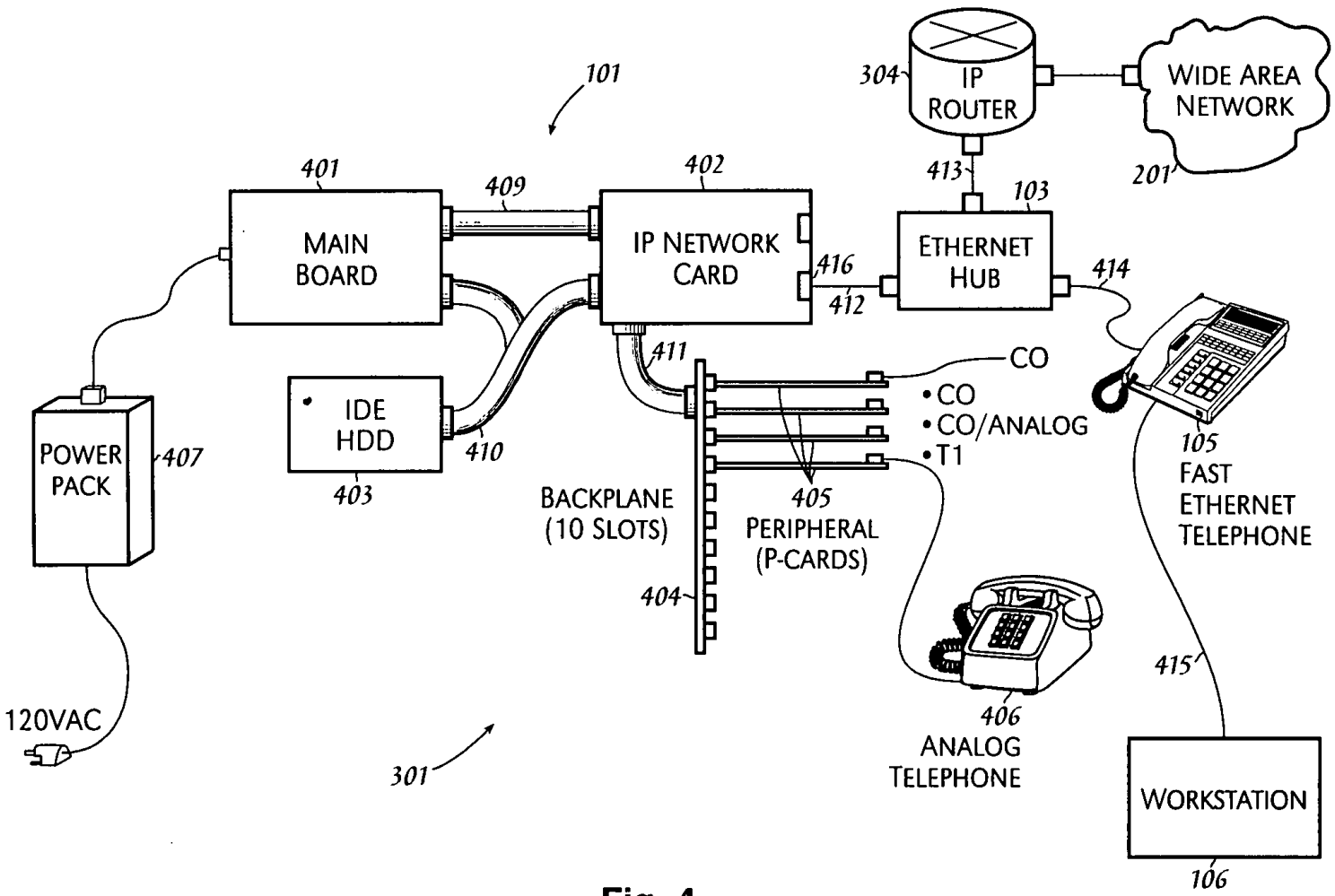
101
401
MAIN BOARD
409
402
IP NETWORK CARD
416
412
413
103
ETHERNET HUB
414
304
IP ROUTER
WIDE AREA NETWORK
201
411
CO
•CO
•CO/ANALOG
•T1
IDE HDD
403
410
POWER PACK
407
BACKPLANE (10 SLOTS)
405
PERIPHERAL (P-CARDS)
404
105
FAST ETHERNET TELEPHONE
406
ANALOG TELEPHONE
415
WORKSTATION
106
120VAC
301

Fig. 4

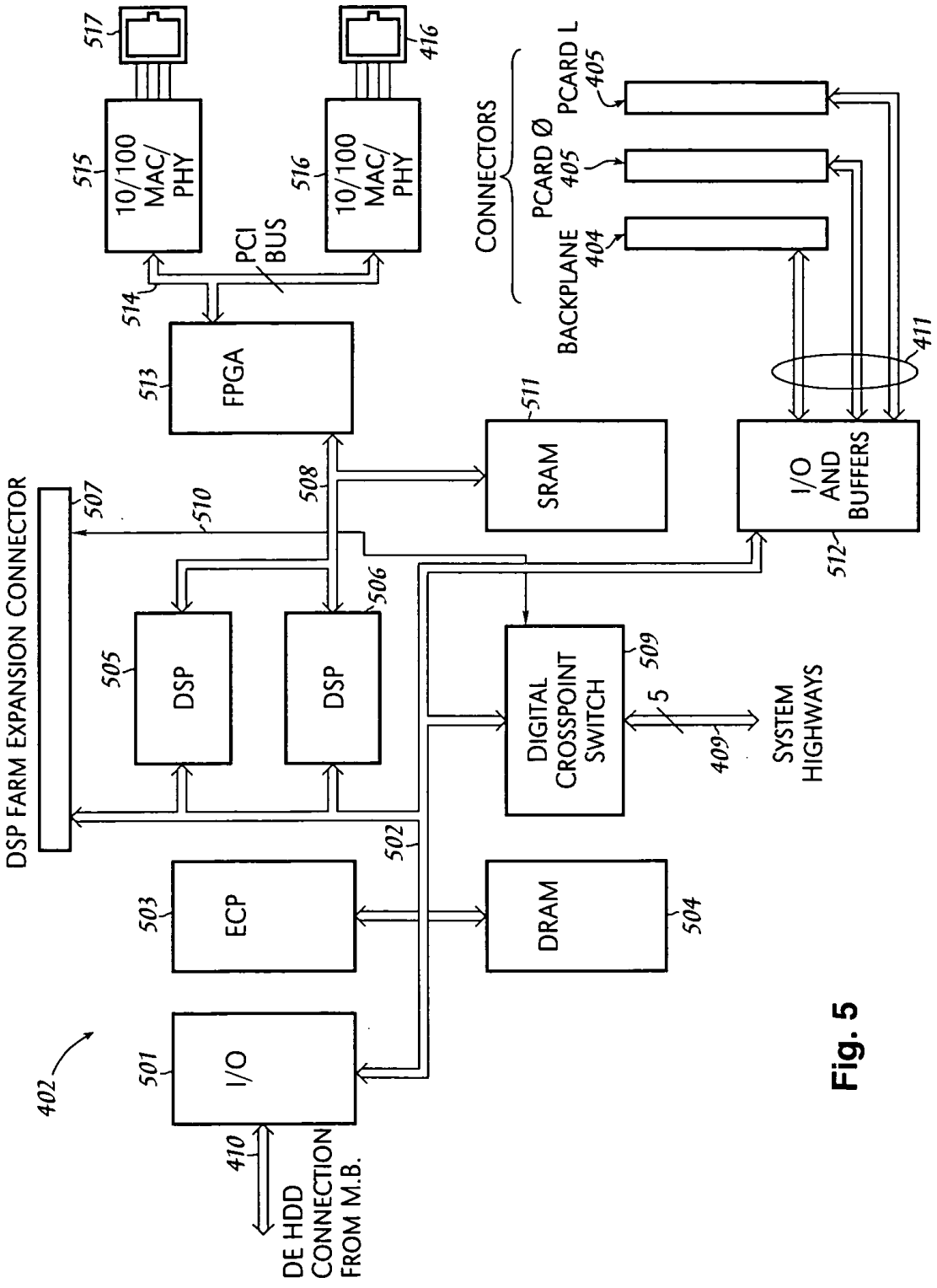
517
416
515
10/100 MAC/ PHY
516
10/100 MAC/ PHY
PCI BUS
514
513
FPGA
CONNECTORS
PCARD Ø
405
PCARD L
405
BACKPLANE
404
411
511
SRAM
I/O AND BUFFERS
512
DSP FARM EXPANSION CONNECTOR
507
510
508
506
505
DSP
DSP
DIGITAL CROSSPOINT SWITCH
509
5
409
SYSTEM HIGHWAYS
502
503
ECP
DRAM
504
402
501
I/O
410
DE HDD CONNECTION FROM M.B.

Fig. 5

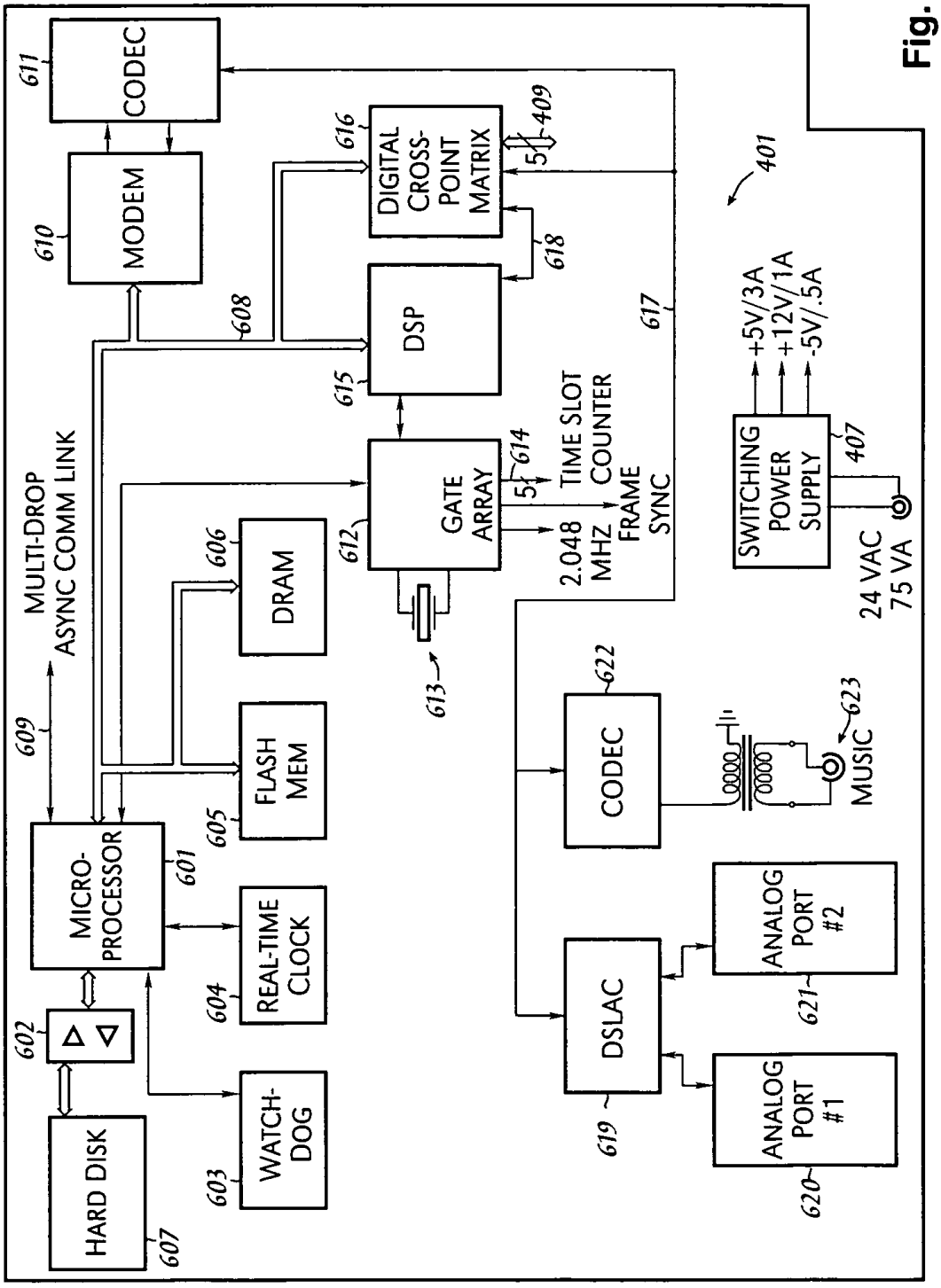
CODEC
611
MODEM
610
DIGITAL CROSS-POINT MATRIX
616
409
401
DSP
608
618
617
615
+5V/3A
+12V/1A
-5V/.5A
MULTI-DROP ASYNC COMM LINK
GATE ARRAY
612
614
TIME SLOT COUNTER
FRAME SYNC
2.048 MHZ
SWITCHING POWER SUPPLY
407
24 VAC 75 VA
DRAM
606
613
609
FLASH MEM
605
CODEC
622
MUSIC
623
MICRO-PROCESSOR
601
REAL-TIME CLOCK
604
602
DSLAC
619
ANALOG PORT #2
621
WATCH-DOG
603
HARD DISK
607
ANALOG PORT #1
620

Fig. 6

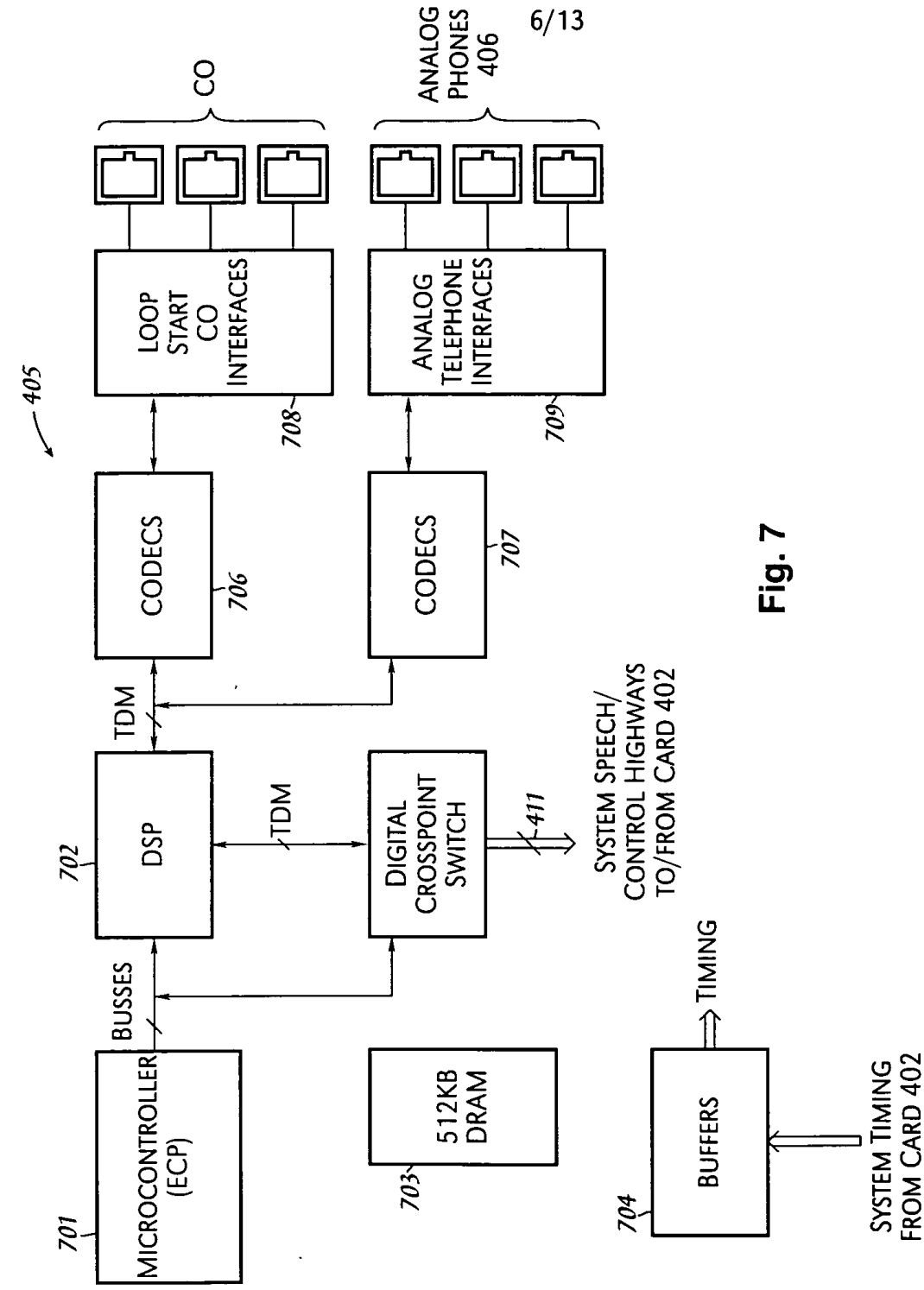
405
CO
ANALOG PHONES 406
LOOP START CO INTERFACES
708
ANALOG TELEPHONE INTERFACES
709
CODECS
706
CODECS
707
TDM
DSP
702
TDM
DIGITAL CROSSPOINT SWITCH
411
SYSTEM SPEECH/ CONTROL HIGHWAYS TO/FROM CARD 402
BUSSES
TIMING
MICROCONTROLLER (ECP)
701
512KB DRAM
703
BUFFERS
704
SYSTEM TIMING FROM CARD 402

Fig. 7

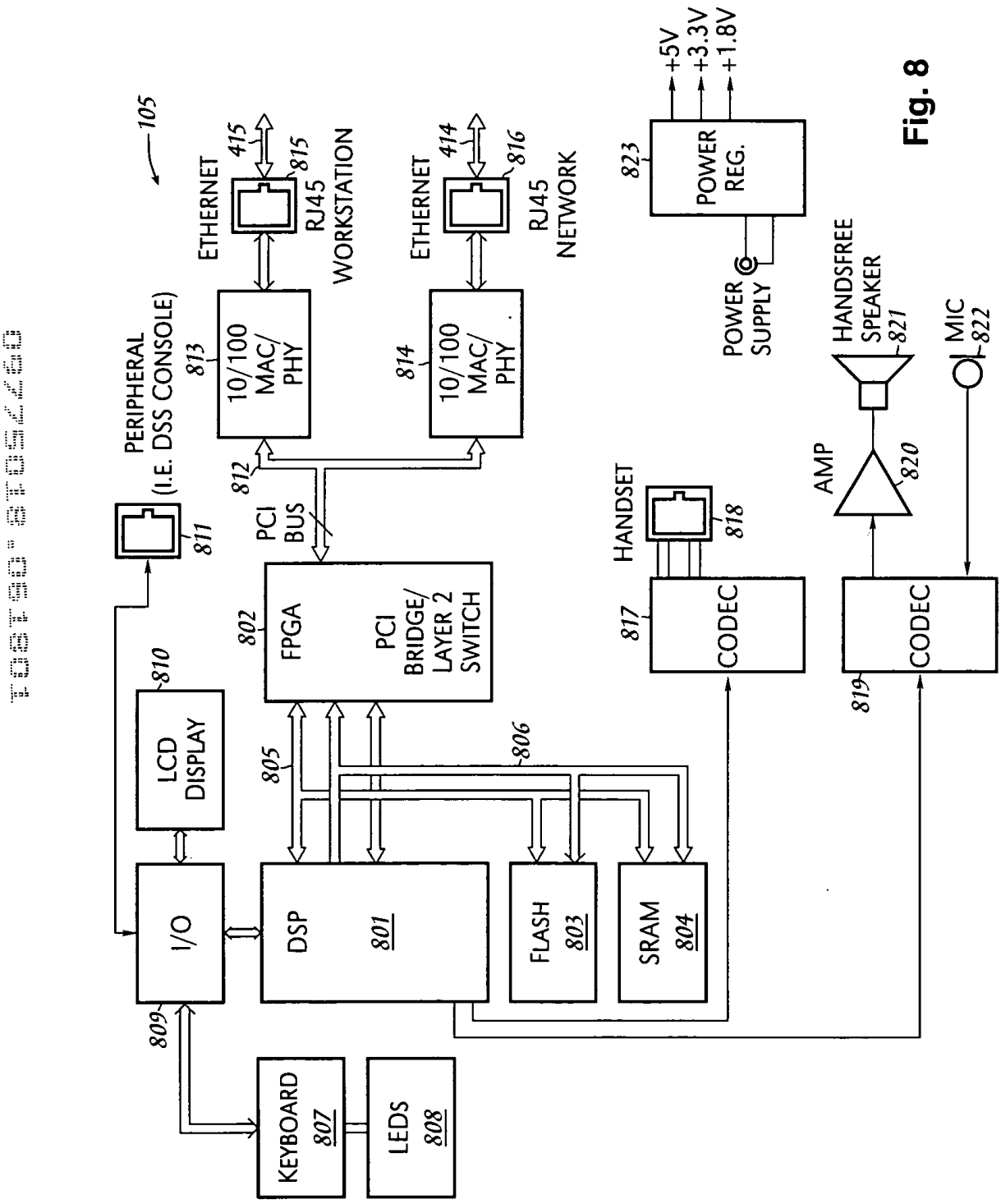
105
PERIPHERAL (I.E. DSS CONSOLE)
811
LCD DISPLAY
810
I/O
809
KEYBOARD 807
LEDS 808
DSP 801
FLASH 803
SRAM 804
FPGA
PCI BRIDGE/ LAYER 2 SWITCH
802
805
806
PCI BUS
812
10/100 MAC/ PHY
813
10/100 MAC/ PHY
814
ETHERNET
415
RJ45
815
WORKSTATION
ETHERNET
414
RJ45
816
NETWORK
HANDSET
818
CODEC
817
AMP
820
HANDSFREE SPEAKER
821
MIC
822
CODEC
819
POWER REG.
823
+5V
+3.3V
+1.8V
POWER SUPPLY

Fig. 8

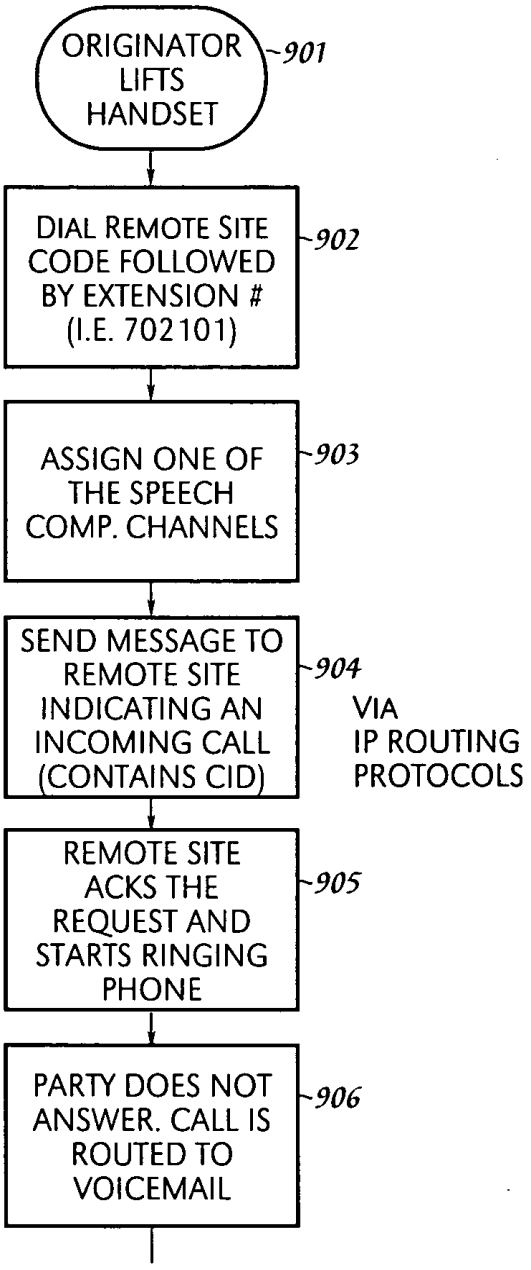
ORIGINATOR LIFTS HANDSET
901
DIAL REMOTE SITE CODE FOLLOWED BY EXTENSION # (I.E. 702101)
902
ASSIGN ONE OF THE SPEECH COMP. CHANNELS
903
SEND MESSAGE TO REMOTE SITE INDICATING AN INCOMING CALL (CONTAINS CID)
904
VIA IP ROUTING PROTOCOLS
REMOTE SITE ACKS THE REQUEST AND STARTS RINGING PHONE
905
PARTY DOES NOT ANSWER. CALL IS ROUTED TO VOICEMAIL
906

Fig. 9

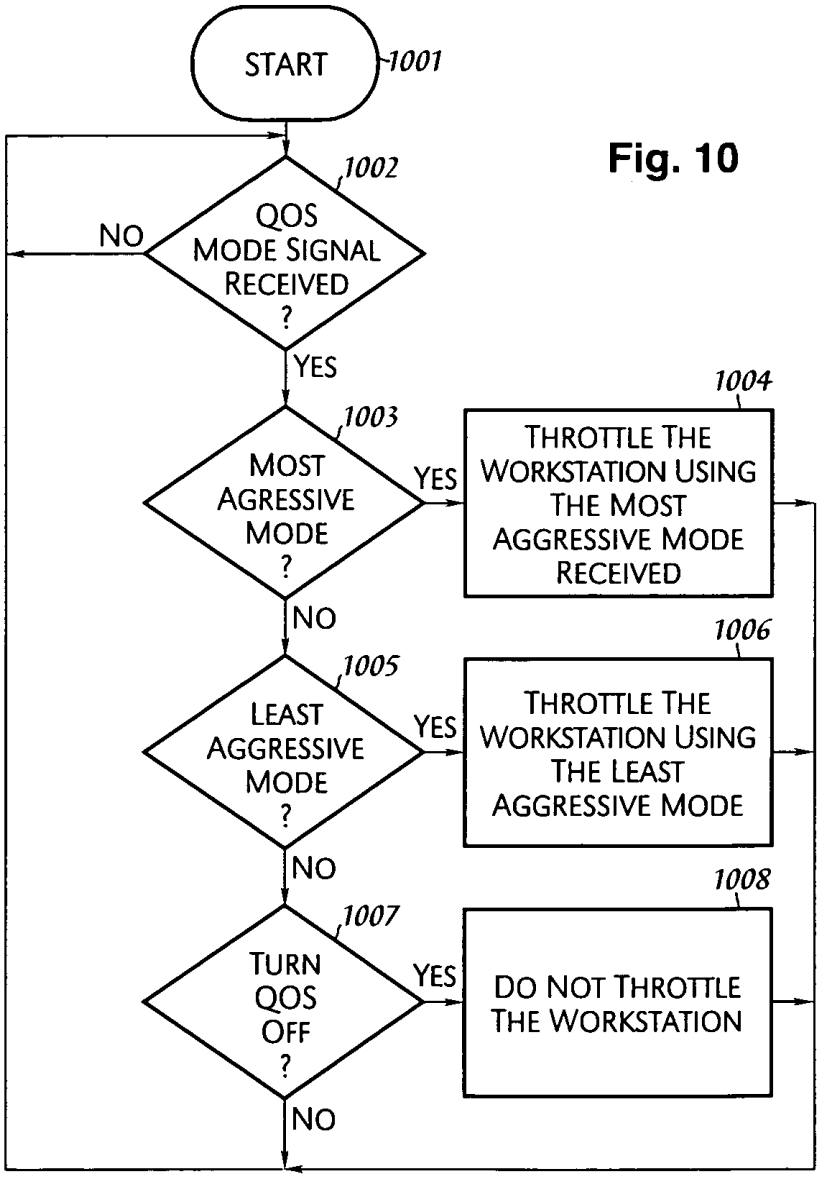

Fig. 10

CISCO EXHIBIT 1004
Page 184 of 345

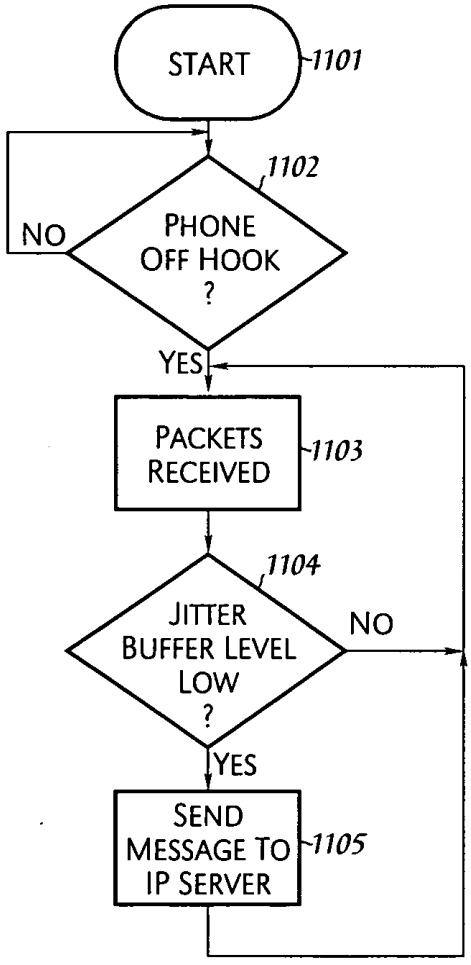
START
1101
1102
PHONE OFF HOOK ?
NO
YES
PACKETS RECEIVED
1103
1104
JITTER BUFFER LEVEL LOW ?
NO
YES
SEND MESSAGE TO IP SERVER
1105

Fig. 11

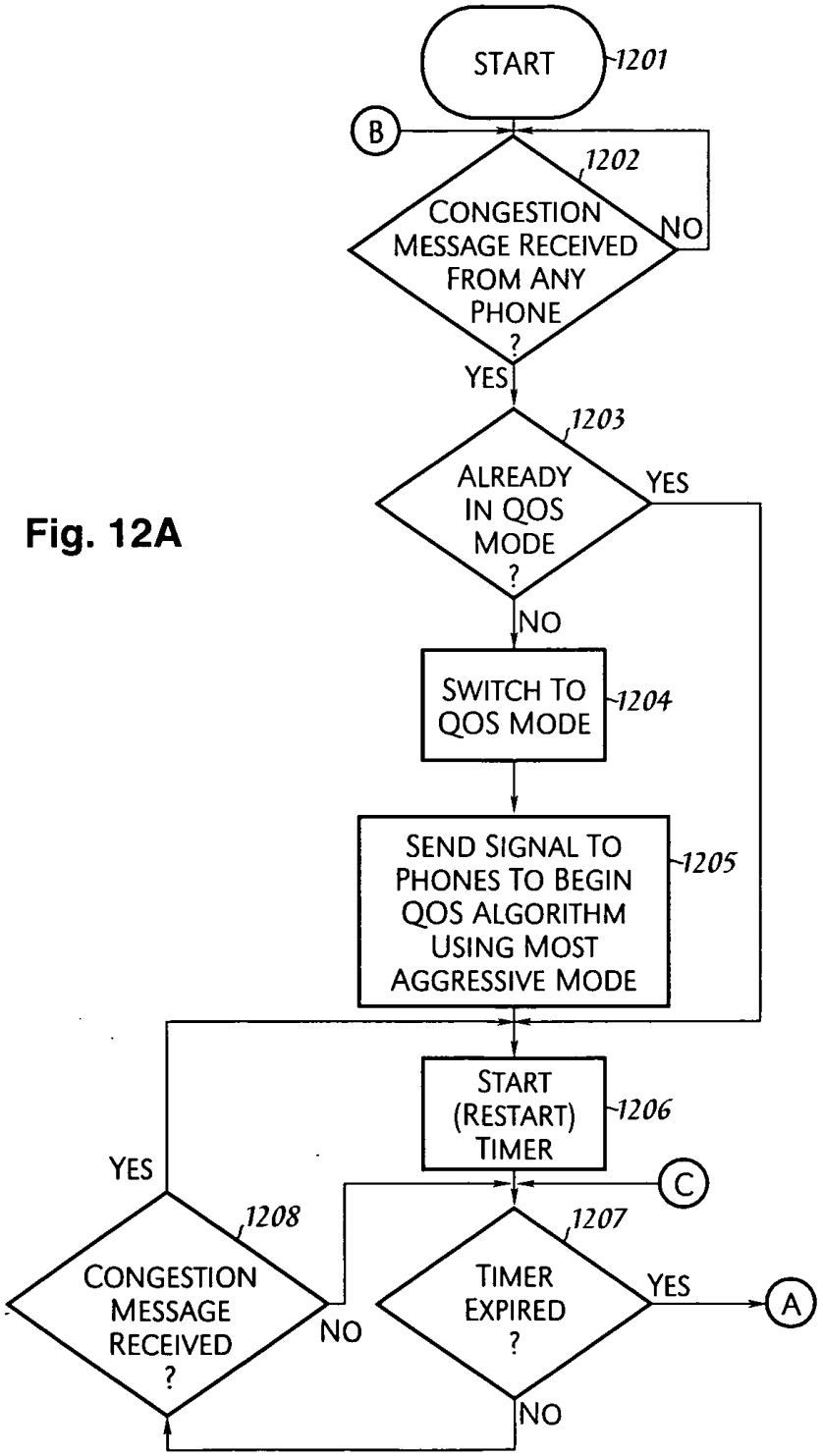

Fig. 12A

CISCO EXHIBIT 1004

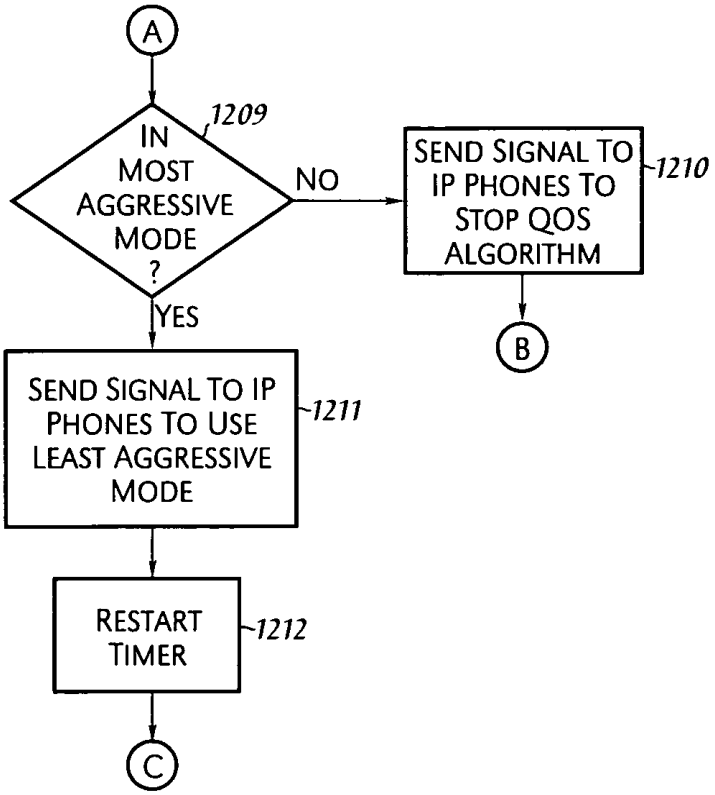
A
1209
IN MOST AGGRESSIVE MODE ?
NO
SEND SIGNAL TO IP PHONES TO STOP QOS ALGORITHM
1210
B
YES
SEND SIGNAL TO IP PHONES TO USE LEAST AGGRESSIVE MODE
1211
RESTART TIMER
1212
C

Fig. 12B

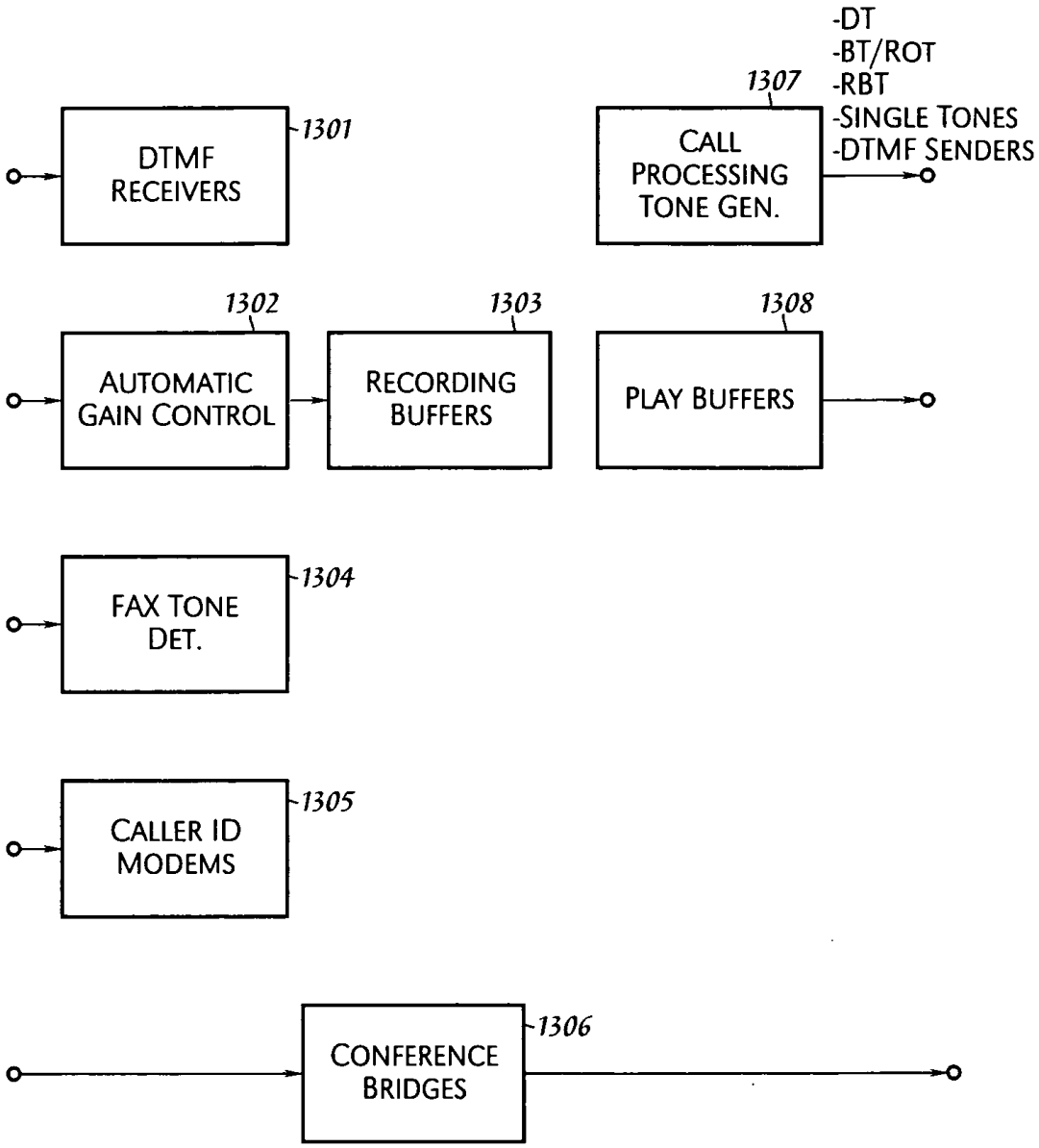
-DT
-BT/ROT
-RBT
-SINGLE TONES
-DTMF SENDERS
1307
DTMF RECEIVERS
1301
CALL PROCESSING TONE GEN.
1302
1303
1308
AUTOMATIC GAIN CONTROL
RECORDING BUFFERS
PLAY BUFFERS
FAX TONE DET.
1304
CALLER ID MODEMS
1305
CONFERENCE BRIDGES
1306

Fig. 13

UNITED STATES PATENT AND TRADEMARK OFFICE

UNITED STATES DEPARTMENT OF COMMERCE
United States Patent and Trademark Office
Address: COMMISSIONER FOR PATENTS
P.O. Box 1450
Alexandria, Virginia 22313-1450
www.uspto.gov

APPLICATION NO.	FILING DATE	FIRST NAMED INVENTOR	ATTORNEY DOCKET NO.	CONFIRMATION NO.
09/775,018	02/01/2001	Eric G. Suder	16312-P005US	7490

7590 07/20/2004

Kelly K. Kordzik
Suite 800
100 Congress Avenue
Austin, TX 78701

EXAMINER	
VANDERPUYE, KENNETH N	

ART UNIT	PAPER NUMBER
2661	

DATE MAILED: 07/20/2004

Please find below and/or attached an Office communication concerning this application or proceeding.

Office Action Summary	Application No.	Applicant(s)	
	09/775,018	SUDER ET AL.	
	Examiner	Art Unit	
	Kenneth N Vanderpuye	2661	

-- The MAILING DATE of this communication appears on the cover sheet with the correspondence address --

Period for Reply

A SHORTENED STATUTORY PERIOD FOR REPLY IS SET TO EXPIRE 3 MONTH(S) FROM THE MAILING DATE OF THIS COMMUNICATION.

- Extensions of time may be available under the provisions of 37 CFR 1.136(a). In no event, however, may a reply be timely filed after SIX (6) MONTHS from the mailing date of this communication.
- If the period for reply specified above is less than thirty (30) days, a reply within the statutory minimum of thirty (30) days will be considered timely.
- If NO period for reply is specified above, the maximum statutory period will apply and will expire SIX (6) MONTHS from the mailing date of this communication.
- Failure to reply within the set or extended period for reply will, by statute, cause the application to become ABANDONED (35 U.S.C. § 133). Any reply received by the Office later than three months after the mailing date of this communication, even if timely filed, may reduce any earned patent term adjustment. See 37 CFR 1.704(b).

Status

1)☐ Responsive to communication(s) filed on _____.

2a)☐ This action is **FINAL**. 2b)☒ This action is non-final.

3)☐ Since this application is in condition for allowance except for formal matters, prosecution as to the merits is closed in accordance with the practice under *Ex parte Quayle*, 1935 C.D. 11, 453 O.G. 213.

Disposition of Claims

4)☒ Claim(s) *1-77* is/are pending in the application.

4a) Of the above claim(s) _____ is/are withdrawn from consideration.

5)☒ Claim(s) *23-56 and 67-77* is/are allowed.

6)☒ Claim(s) *1-5,21 and 57-66* is/are rejected.

7)☐ Claim(s) _____ is/are objected to.

8)☐ Claim(s) _____ are subject to restriction and/or election requirement.

Application Papers

9)☐ The specification is objected to by the Examiner.

10)☐ The drawing(s) filed on _____ is/are: a)☐ accepted or b)☐ objected to by the Examiner.

Applicant may not request that any objection to the drawing(s) be held in abeyance. See 37 CFR 1.85(a).

Replacement drawing sheet(s) including the correction is required if the drawing(s) is objected to. See 37 CFR 1.121(d).

11)☐ The oath or declaration is objected to by the Examiner. Note the attached Office Action or form PTO-152.

Priority under 35 U.S.C. § 119

12)☐ Acknowledgment is made of a claim for foreign priority under 35 U.S.C. § 119(a)-(d) or (f).

a)☐ All b)☐ Some * c)☐ None of:

1.☐ Certified copies of the priority documents have been received.

2.☐ Certified copies of the priority documents have been received in Application No. _____.

3.☐ Copies of the certified copies of the priority documents have been received in this National Stage application from the International Bureau (PCT Rule 17.2(a)).

* See the attached detailed Office action for a list of the certified copies not received.

Attachment(s)

1) ☒ Notice of References Cited (PTO-892)
2) ☒ Notice of Draftsperson's Patent Drawing Review (PTO-948)
3) ☒ Information Disclosure Statement(s) (PTO-1449 or PTO/SB/08) Paper No(s)/Mail Date _____.
4) ☐ Interview Summary (PTO-413) Paper No(s)/Mail Date. _____.
5) ☐ Notice of Informal Patent Application (PTO-152)
6) ☐ Other: _____.

DETAILED ACTION

Claim Rejections - 35 USC § 112

The following is a quotation of the second paragraph of 35 U.S.C. 112:

> The specification shall conclude with one or more claims particularly pointing out and distinctly claiming the subject matter which the applicant regards as his invention.

Claims 59-64, 66 are rejected under 35 U.S.C. 112, second paragraph, as being indefinite for failing to particularly point out and distinctly claim the subject matter which applicant regards as the invention.

Claim 58 recites the limitation "the monitoring circuit" in 1. There is insufficient antecedent basis for this limitation in the claim.

Claim Rejections - 35 USC § 102

The following is a quotation of the appropriate paragraphs of 35 U.S.C. 102 that form the basis for the rejections under this section made in this Office action:

> A person shall be entitled to a patent unless –
>
> (b) the invention was patented or described in a printed publication in this or a foreign country or in public use or on sale in this country, more than one year prior to the date of application for patent in the United States.

Claims 1-5, 21 are rejected under 35 U.S.C. 102(b) as being anticipated by Chen et al.(5,751,791).

With regards to claims 1, Chen teaches a system comprising: a hub(Fig. 1@90), a multimedia server(Fig. 1@92), a telephony device coupled to the hub(Fig. 1@80), and a first network device coupled to the hub through the telephony device(Fig. 1@70), wherein the telephony device includes circuitry for throttling data sent from the first network device(the telephony device used to dial up the connection controls the data rate at 56kbps over the link).

Claim 2 is rejected because Chen teaches a second network device connected to the hub, wherein data sent from the first network device is addressed for transmission to the second network device(Fig. 1@70c, the system in Fig. 1 is set up in such a way that enables device 70c to communicate with device 70)

Claims 3, 5 are rejected because all devices are all coupled together via an ISDN network, BRI, PRI).

Claim 21 is rejected because in Chen communication is realtime and the telephony device maintains the data rate at 56kbps.

The following is a quotation of the appropriate paragraphs of 35 U.S.C. 102 that form the basis for the rejections under this section made in this Office action:

A person shall be entitled to a patent unless –

(e) the invention was described in (1) an application for patent, published under section 122(b), by another filed in the United States before the invention by the applicant for patent or (2) a patent granted on an application for patent by another filed in the United States before the invention by the applicant for patent, except that an international application filed under the treaty defined in section 351(a) shall have the effects for purposes of this subsection of an application filed in the United States only if the international application designated the United States and was published under Article 21(2) of such treaty in the English language.

Claims 57-58, 65 are rejected under 35 U.S.C. 102(e) as being anticipated by Edelson et al.(6,504,926)

With regards to claim 57 Edelson teaches an IP telephony device comprising:

an input data port for receiving data(Fig. 2@23 microphone), wherein the data is addressed for transmission to a location other than the IP telephony device(Fig. 2 data being sent to the internet) ; circuitry for communicating information to and from the IP telephony device(Fig. 2, circuitry in the personal computer supports bi-directional communication) and circuitry for sufficiently throttling the data so that the communication of the information can be performed real-time. (inherently taught because voice data is being sent out realtime).

Claim 58 is rejected because the IP telephony device communicates using IP rptocol (Fig. 2@31).

Claim 65 is rejected because Edelson teaches an IP telephony device further comprising: a microphone, a speaker and circuitry for communicating audio information to the speaker(Fig. 2 @23, 25, 26)

Claim Rejections - 35 USC § 103

The following is a quotation of 35 U.S.C. 103(a) which forms the basis for all obviousness rejections set forth in this Office action:

> (a) A patent may not be obtained though the invention is not identically disclosed or described as set forth in section 102 of this title, if the differences between the subject matter sought to be patented and the prior art are such that the subject matter as a whole would have been obvious at the time the invention was made to a person having ordinary skill in the art to which said subject matter pertains. Patentability shall not be negatived by the manner in which the invention was made.

Claims 4, 6 are rejected under 35 U.S.C. 103(a) as being unpatentable over Chen et al. in view of Hung et al.(6,760,429)

With regards to claims 4, 6 Chen fails to teach a TCP/IP network or the multimedia server and the telephony device communicating using IP protocol. The network in Chen is a packet network however it is not TCP/IP.. Hung et al teaches an IP network with a telephony device and a multimedia sever communicating using TCP/IP protocol. It would have been obvious to one of ordinary skill in the art to combine Chen with Hung for the purpose of sending multimedia messages over an IP network. The

motivation being the use of a connection oriented network for multimedia communications.

Allowable Subject Matter

Claim23-56, 67-77 are allowed.

Any inquiry concerning this communication or earlier communications from the examiner should be directed to Kenneth N Vanderpuye whose telephone number is 703-308-7828. The examiner can normally be reached on M-F(7:30-5:00) Second Friday Off.

If attempts to reach the examiner by telephone are unsuccessful, the examiner's supervisor, Doug Olms can be reached on 703-305-4703. The fax phone number for the organization where this application or proceeding is assigned is 703-872-9306.

Information regarding the status of an application may be obtained from the Patent Application Information Retrieval (PAIR) system. Status information for published applications may be obtained from either Private PAIR or Public PAIR. Status information for unpublished applications is available through Private PAIR only. For more information about the PAIR system, see http://pair-direct.uspto.gov. Should you have questions on access to the Private PAIR system, contact the Electronic Business Center (EBC) at 866-217-9197 (toll-free).

KNV
7/9/04

KENNETH VANDERPUYE
PRIMARY EXAMINER

Notice of References Cited	Application/Control No. 09/775,018	Applicant(s)/Patent Under Reexamination SUDER ET AL.	
	Examiner Kenneth N Vanderpuye	Art Unit 2661	Page 1 of 1

U.S. PATENT DOCUMENTS

*		Document Number Country Code-Number-Kind Code	Date MM-YYYY	Name	Classification
	A	US-6,535,521 B1	03-2003	Barghouti et al.	370/462
	B	US-6,587,433 B1	07-2003	Borella et al.	370/230
	C	US-5,751,791 A	05-1998	Chen et al.	379/88.13
	D	US-6,504,926 B1	01-2003	Edelson et al.	379/390.01
	E	US-6,760,429 B1	07-2004	Hung et al.	379/265.09
	F	US-			
	G	US-			
	H	US-			
	I	US-			
	J	US-			
	K	US-			
	L	US-			
	M	US-			

FOREIGN PATENT DOCUMENTS

*		Document Number Country Code-Number-Kind Code	Date MM-YYYY	Country	Name	Classification
	N					
	O					
	P					
	Q					
	R					
	S					
	T					

NON-PATENT DOCUMENTS

*		Include as applicable: Author, Title Date, Publisher, Edition or Volume, Pertinent Pages)
	U	
	V	
	W	
	X	

*A copy of this reference is not being furnished with this Office action. (See MPEP § 707.05(a).)
Dates in MM-YYYY format are publication dates. Classifications may be US or foreign.

OIPE JC11 3
APR 0 9 2001
PATENT & TRADEMARK OFFICE

In Place of FORM PTO-1449 (Modified)

LIST OF PATENTS AND PUBLICATIONS FOR APPLICANT'S INFORMATION DISCLOSURE STATEMENT

Serial No.: 09/775,018
Applicant: Eric G. Suder et al.
Filing Date: February 1, 2001
Group: 2661
Atty. Docket No.: 16312-P005US

RECEIVED
APR 1 2 2001
Technology Center 2600

Reference Designation

U.S. PATENT DOCUMENTS

Examiner Initial	Document Number	Date	Name	Class	Subclass	Filing Date if Appropriate
AAA	5,982,779	11/09/99	Krishnakumar et al.	370	447	
ABA						
ACA						
ADA						
AEA						
AFA						
AGA						
AHA						
AIA						
AJA						
AKA						

FOREIGN PATENT DOCUMENTS

Examiner Initial	Document Number	Date	Country	Class	Subclass	Translation Yes	Translation No
ALA							
AMA							
ANA							
AOA							
APA							

OTHER ART (Including Author, Title, Date, Pertinent Pages, Etc.)

Examiner Initial

ARA *Avaya Communication*, "Avaya IP Telephone," available via the Internet at www.lucent.com/enterprise/solutions/eclips/pdf/black_white_paper.pdf, November 9, 2000.

ASA *Avaya Communication*, "Quality of Service (QoS) considerations with 4600 Series IP Telephones," available via the Internet at www.lucent.com/enterprise/solutions/eclips/pdf/QoSwhite_paper.pdf, January 29, 2000.

ATA

Examiner: Date Considered: 7/9/04

EXAMINER: Initial if reference considered, whether or not citation is in conformance with MPEP 609; Draw line through citation if not in conformance and not considered. Include copy of this form with next communication to applicant.

::ODMA\PCDOCS\AUSTIN_1\162128\1
207:16312-P005US

16312-P005US PATENT

IN THE UNITED STATES PATENT AND TRADEMARK OFFICE

In re Application: Suder et al.

Serial No.: 09/775,018

Filed: February 1, 2001

Art Unit: 2661

Examiner: Kenneth Vanderpuye

For: QUALITY OF SERVICE IN A VOICE OVER IP TELEPHONE SYSTEM

AMENDMENT UNDER 37 C.F.R. § 1.111

Mail Stop Amendment
Commissioner for Patents
P.O. Box 1450
Alexandria, VA 22313-1450

RECEIVED
AUG 3 1 2004
Technology Center 2600

Dear Sir:

In response to the Office Action having a mailing date of July 20, 2004, with a three-month shortened statutory period for response set to expire on October 20, 2004, please amend the above-identified Application as follows:

CERTIFICATION UNDER 37 C.F.R. § 1.8

I hereby certify that this correspondence is being deposited with the United States Postal Service with sufficient postage as first class mail in an envelope addressed to Mail Stop Amendment, Commissioner for Patents, P.O. Box 1450, Alexandria, VA 22313-1450, on 8-23, 2004.

Signature

Toni Stanley
(Printed name of person certifying)

41

2661

16312-P005US

PATENT

IN THE UNITED STATES PATENT AND TRADEMARK OFFICE

In re Application:	Eric Suder et al.
Serial No.:	09/775,018
Filed:	February 1, 2001
Art Unit:	2661
Examiner:	Kenneth Vanderpuye
For:	QUALITY OF SERVICE IN A VOICE OVER IP TELEPHONE SYSTEM

AMENDMENT TRANSMITTAL LETTER

RECEIVED
AUG 3 1 2004
Technology Center 2600

Mail Stop Amendment
Commissioner for Patents
P.O. Box 1450
Alexandria, VA 22313-1450

Dear Sir:

Transmitted herewith is an Amendment under 37 C.F.R. §1.111 and Acknowledgment Postcard for the above-identified Application.

☒ No additional fee is required.

☐ The fee has been calculated as shown below:

CERTIFICATION UNDER 37 C.F.R. § 1.8

I hereby certify that this correspondence is being deposited with the United States Postal Service with sufficient postage as first class mail in an envelope addressed to Mail Stop Amendment, Commissioner for Patents, P.O. Box 1450, Alexandria, VA 22313-1450, on 8-23, 2004.

Toni Stanley
Signature

Toni Stanley
(Printed name of person certifying)

CLAIMS AS AMENDED						
	CLAIMS REMAINING AFTER AMENDMENT		HIGHEST NUMBER PREVIOUSLY PAID FOR	PRESENT EXTRA	SMALL ENTITY RATE	ADDITIONAL FEE
Total Claims:	77	-	77	0	x $9=	$ - 0 -
Independent Claims:	5	-	5	0	x $43 =	$ - 0 -
			TOTAL ADDITIONAL FEE FOR THIS AMENDMENT =			$ - 0 -

☐ A check in the amount of $0 is enclosed. **A duplicate copy of this transmittal letter is enclosed.**

☒ The Assistant Commissioner is hereby authorized to charge any insufficiency of payment of the following fees associated with this communication, or credit any overpayment, to Deposit Account No. 23-2426 (16312-P005US) . **A duplicate copy of this transmittal letter is enclosed.**

☒ Any additional filing fees required under 37 C.F.R. § 1.16.
☒ Any patent application processing fees under 37 C.F.R. § 1.17.

Respectfully submitted,

WINSTEAD SECHREST & MINICK P.C.

Attorney for Applicants

By: _____
Kelly K. Kordzik
Reg. No. 36,571

P.O. Box 50784
Dallas, Texas 75201
(512) 370-2851

AUSTIN_1\237035\2
16312-P003D1

IN THE CLAIMS

Please rewrite the claims as follows:

1. (original) An information handling system comprising:

a hub;

a multimedia server coupled to the hub;

a telephony device coupled to the hub; and

a first network device coupled to the hub through the telephony device, wherein the telephony device includes circuitry for throttling data sent from the first network device.

2. (original) The system as recited in claim 1, further comprising:

a second network device coupled to the hub, wherein the data sent from the first network device is addressed for transmission to the second network device.

3. (original) The system as recited in claim 2, wherein the hub, multimedia server, second network device, telephony device, and first network device are coupled to each other via a network.

4. (original) The system as recited in claim 3, wherein the network is a TCP/IP network.

5. (original) The system as recited in claim 4, wherein the network is a packet switched network.

6. (original) The system as recited in claim 3, wherein the telephony device and multimedia server communicate using an IP protocol.

7. (original) The system as recited in claim 1, wherein the throttling circuitry reduces a future amount of data from being transferred from the first network device if the amount of data exceeds a predetermined threshold.

8. (original) The system as recited in claim 1, wherein the telephony device includes circuitry for monitoring an amount of data addressed to and received by the telephony device, wherein the throttling circuitry reduces a future amount of data from being transferred from the first network device if the amount of data addressed to and received by the telephony device falls below a predetermined threshold.

9. (original) The system as recited in claim 8, wherein the monitoring circuitry comprises a jitter buffer where the predetermined threshold is a predetermined level within the jitter buffer.

10. (original) The system as recited in claim 8, wherein the monitoring circuitry further comprises circuitry for sending a congestion message to the multimedia server when the amount of data addressed to and received by the telephony device falls below the predetermined threshold.

11. (original) The system as recited in claim 10, wherein the multimedia server further comprises circuitry for sending a throttling signal to the telephony device in response to receipt of the congestion message from the monitoring circuitry.

12. (original) The system as recited in claim 11, wherein the throttling circuitry in the telephony device throttles the future amount of data sent from the first network device in response to receipt of the throttling signal.

13. (original) The system as recited in claim 12, wherein the throttling signal includes a mode level in which the throttling circuitry should operate.

14. (original) The system as recited in claim 13, wherein the throttling circuitry adjusts its level of throttling of the data in response to the mode level included in the throttling signal.

15. (original) The system as recited in claim 14, wherein the mode level is a most aggressive mode, wherein the throttling circuitry will throttle the future amount of data sent from the first network device at a highest level in response to the mode level being in the most aggressive mode.

16. (original) The system as recited in claim 15, wherein the sending circuitry in the multimedia server will designate the mode level at the most aggressive mode as long as the congestion message is received from any telephony device coupled to the multimedia server within a specified time period.

17. (original) The system as recited in claim 16, wherein the throttling signal will switch to a least aggressive mode if the congestion message is not received from any telephony device coupled to the multimedia server within the specified time period.

18. (original) The system as recited in claim 17, wherein the throttling circuitry will throttle the future amount of data sent from the first network device at a level lower than the highest level in response to the mode level being in the least aggressive mode.

19. (original) The system as recited in claim 18, wherein the throttling signal will contain a signal to stop the throttling of the future amount of data if the congestion message is not received from any telephony device coupled to the multimedia server within the specified time period while the mode level has been in the least aggressive mode.

20. (original) The system as recited in claim 19, further comprising another telephony device coupled between the hub and a second network device, wherein the telephony device also includes throttling circuitry for throttling a future amount of data sent from the second network device in response to receipt of the throttling signal.

21. (original) The system as recited in claim 1, wherein the data sent from the first network device is sufficiently throttled so that the telephony device can communicate real-time multimedia signals to and from the multimedia server.

22. (original) The system as recited in claim 1, wherein the throttling results in no data being sent from the first network device to the telephony device.

23. (original) An information handling system comprising:

a TCP/IP network;

a hub;

a multimedia server coupled to the hub via the TCP/IP network;

a first IP telephony device coupled to the hub via the TCP/IP network;

a first network device coupled to the first IP telephony device;

a second network device coupled to the hub via the TCP/IP network, wherein data sent from the first network device is addressed for transmission to the second network device and is transmitted through the first IP telephony device to the TCP/IP network, wherein the first IP telephony device includes first circuitry for monitoring if an amount of multimedia data being addressed to the IP telephony device and received over the TCP/IP network falls below a first predetermined threshold, wherein the first IP telephony device includes first circuitry for throttling the data sent from the first network device in response to the first monitoring circuitry determining that the amount of multimedia data being received by the first IP telephony device over the TCP/IP network falls below the first predetermined threshold.

24. (original) The system as recited in claim 23, further comprising:

a second IP telephony device coupled to the hub via the TCP/IP network; and

a third network device coupled to the second IP telephony device, wherein data sent from the third network device is addressed for transmission to the second network device and is transmitted through the second IP telephony device to the TCP/IP network,

wherein the second IP telephony device includes second circuitry for throttling the data sent from the third network device in response to the first monitoring circuitry determining that the

amount of multimedia data being received by the first IP telephony device over the TCP/IP network falls below the first predetermined threshold.

25. (original) The system as recited in claim 24, wherein the first monitoring circuitry further comprises first circuitry for sending a first congestion message to the multimedia server over the TCP/IP network when the amount of multimedia data being received by the first IP telephony device over the TCP/IP network falls below the first predetermined threshold.

26. (original) The system as recited in claim 25, wherein the multimedia server further comprises circuitry for sending a throttling signal to the first and second IP telephony devices over the TCP/IP network in response to receipt of the first congestion message from the first monitoring circuitry.

27. (original) The system as recited in claim 26, wherein the first throttling circuitry in the first IP telephony device throttles the data sent from the first network device in response to receipt of the throttling signal, wherein the second throttling circuitry in the second IP telephony device throttles the data sent from the third network device in response to receipt of the throttling signal.

28. (original) The system as recited in claim 27, wherein the throttling signal includes a mode level in which the first and second throttling circuitries should operate.

29. (original) The system as recited in claim 28, wherein the first throttling circuitry adjusts its level of throttling of the data in response to the mode level included in the throttling signal,

wherein the second throttling circuitry adjusts its level of throttling of the data in response to the mode level included in the throttling signal.

30. (original) The system as recited in claim 29, wherein the mode level is a most aggressive mode, wherein the first throttling circuitry will throttle the data sent from the first network device at a highest level in response to the mode level being in the most aggressive mode, wherein the second throttling circuitry will throttle the data sent from the third network device at a highest level in response to the mode level being in the most aggressive mode.

31. (original) The system as recited in claim 30, wherein the second IP telephony device includes second circuitry for monitoring if a second amount of multimedia data being received by the second IP telephony device over the TCP/IP network falls below a second predetermined threshold, wherein the second monitoring circuitry further comprises second circuitry for sending a second congestion message to the multimedia server over the TCP/IP network when the second amount of multimedia data being received by the second IP telephony device over the TCP/IP network falls below the second predetermined threshold.

32. (original) The system as recited in claim 31, wherein the sending circuitry in the multimedia server will designate the mode level at the most aggressive mode as long as the first or second congestion messages are received within a specified time period.

33. (original) The system as recited in claim 31, wherein the throttling signal will switch to a least aggressive mode if the congestion message is not received from any IP telephony device coupled to the multimedia server within the specified time period.

34. (original) The system as recited in claim 32, wherein the throttling circuitry will throttle the data sent from the second network device at a level lower than the highest level in response to the mode level being in the least aggressive mode.

35. (original) The system as recited in claim 33, wherein the throttling signal will contain a signal to stop the throttling of the data if the congestion message is not received from any IP telephony device coupled to the multimedia server within the specified time period while the mode level has been in the least aggressive mode.

36. (original) The system as recited in claim 34, wherein the multimedia data includes real-time audio information.

37. (original) The system as recited in claim 23, wherein the data sent from the first network device is sufficiently throttled so that the first IP telephony device can communicate real-time signals to and from the multimedia server over the TCP/IP network.

38. (original) In an information handling system comprising a hub, a multimedia server ("multimedia server") coupled to the hub, a telephone coupled to the hub, a workstation coupled to the hub through the telephone, and a data server coupled to the hub, a method comprising the steps of:

transferring data from the workstation to the telephone, wherein the data sent from the workstation is addressed for transmission to the data server;

communicating audio information between the telephone and the multimedia server; and

sufficiently throttling the data sent from the workstation to the telephone to increase a rate of transfer of the audio information during the communicating step.

39. (original) The method as recited in claim 38, wherein the hub, multimedia server, data server, telephone, and workstation are coupled to each other via a network.

40. (original) The method as recited in claim 39, wherein the network is a TCP/IP network.

41. (original) The method as recited in claim 39, wherein the network is a packet switched network.

42. (original) The method as recited in claim 39, wherein the telephone and multimedia server communicate using an IP protocol.

43. (original) The method as recited in claim 38, wherein the throttling step further comprises the step of reducing a future amount of data from being transferred from the workstation if the amount of data exceeds a predetermined threshold.

44. (original) The method as recited in claim 38, wherein the throttling step further comprises the step of monitoring an amount of the audio information being received by the telephone from the multimedia server.

45. (original) The method as recited in claim 44, wherein the monitoring step further comprises the step of monitoring a predetermined level within a jitter buffer.

46. (original) The method as recited in claim 44, wherein the monitoring step further comprises the step of the telephone sending a congestion message to the multimedia server when the amount of the audio information falls below the predetermined level.

47. (original) The method as recited in claim 46, further comprising the step of the multimedia server sending a throttling signal to the telephone in response to receipt of the congestion message.

48. (original) The method as recited in claim 47, wherein the throttling step operates in response to receipt of the throttling signal.

49. (original) The method as recited in claim 48, wherein the throttling signal includes a mode level.

50. (original) The method as recited in claim 49, wherein the throttling step further comprises the step of adjusting a level of throttling of the data in response to the mode level included in the throttling signal.

51. (original) The method as recited in claim 50, wherein the step of the multimedia server sending a throttling signal to the telephone in response to receipt of the congestion message further comprises the step of setting the mode level to a most aggressive mode, wherein the

throttling step will throttle the future amount of data sent from the workstation at a highest level in response to the mode level being in the most aggressive mode.

52. (original) The method as recited in claim 51, wherein the setting step will designate the mode level at the most aggressive mode as long as the congestion message is received from any telephone coupled to the multimedia server within a specified time period.

53. (original) The method as recited in claim 52, wherein the step of the multimedia server sending a throttling signal to the telephone in response to receipt of the congestion message further comprises the step of setting the mode level to a least aggressive mode if the congestion message is not received from any telephone coupled to the multimedia server within the specified time period.

54. (original) The method as recited in claim 53, wherein the throttling step will throttle the future amount of data sent from the workstation at a level lower than the highest level in response to the mode level being in the least aggressive mode.

55. (original) The method as recited in claim 54, wherein the step of the multimedia server sending a throttling signal to the telephone in response to receipt of the congestion message further comprises the step of sending a message to stop the throttling of the future amount of data if the congestion message is not received from any telephone coupled to the multimedia server within the specified time period while the mode level has been in the least aggressive mode.

56. (original) The method as recited in claim 38, wherein the throttling results in no data being sent from the workstation to the telephone.

57. (original) An IP telephony device comprising:

an input data port for receiving data, wherein the data is addressed for transmission to a location other than the IP telephony device;

circuitry for communicating information to and from the IP telephony device; and

circuitry for sufficiently throttling the data so that the communication of the information can be performed in real-time.

58. (original) The IP telephony device as recited in claim 57, wherein the IP telephony device communicates the information using an IP protocol.

59. (currently amended) The IP telephony device as recited in claim 58, wherein the [[monitoring]] throttling circuitry further comprises circuitry for sending a congestion message from a data output port when the amount of the information being received by the IP telephony device falls below a predetermined level.

60. (original) The IP telephony device as recited in claim 59, wherein the throttling circuitry throttles the future amount of data received at the input data port in response to receipt of a throttling signal at the input data port, wherein the throttling signal is a function of the congestion message.

61. (original) The IP telephony device as recited in claim 60, wherein the throttling signal includes a mode level in which the throttling circuitry should operate.

62. (original) The IP telephony device as recited in claim 61, wherein the throttling circuitry adjusts its level of throttling of the data in response to the mode level included in the throttling signal.

63. (original) The IP telephony device as recited in claim 62, wherein when the mode level is a most aggressive mode, the throttling circuitry will throttle the future amount of data at a highest level in response to the mode level being in the most aggressive mode.

64. (original) The IP telephony device as recited in claim 63, wherein the throttling circuitry will throttle the future amount of data sent from the workstation at a level lower than the highest level in response to the mode level being in a least aggressive mode.

65. (original) The IP telephony device as recited in claim 57, further comprising:

a microphone;

a speaker; and

circuitry for communicating the audio information to the speaker and from the microphone.

66. (original) The IP telephony device as recited in claim 60, further comprising:

a microphone;

a speaker; and

circuitry for communicating the audio information to the speaker and from the microphone.

67. (original) A multimedia server comprising:

a network connection for connecting the multimedia server to a data network;

circuitry operable for communicating audio information with a telephone connected to the data network;

circuitry operable for sending a throttling signal onto the data network in response to receipt of a congestion message from the data network.

68. (original) The multimedia server as recited in claim 67, wherein the network is a TCP/IP network.

69. (original) The multimedia server as recited in claim 67, wherein the network is a packet switched network.

70. (original) The multimedia server as recited in claim 67, wherein the communicating circuitry further comprises circuitry operable for communicating the audio information using an IP protocol.

71. (original) The multimedia server as recited in claim 68, wherein the throttling signal includes a mode level.

72. (original) The multimedia server as recited in claim 71, wherein the sending circuitry will designate the mode level at a most aggressive mode as long as the congestion message is received within a specified time period.

73. (original) The multimedia server as recited in claim 72, wherein the throttling signal will switch to a least aggressive mode if the congestion message is not received within the specified time period.

74. (original) The multimedia server as recited in claim 73, wherein the throttling signal will contain a stop data throttling signal if the congestion message is not received within the specified time period while the mode level has been in the least aggressive mode.

75. (original) The multimedia server as recited in claim 67, further comprising:

a peripheral card adaptable for coupling to a telecommunications network.

76. (original) The multimedia server as recited in claim 75, wherein the telecommunications network is a public switched telephone network.

77. (original) The multimedia server as recited in claim 75, further comprising:

switching circuitry for communicating the audio information between the network connection and the peripheral card.

REMARKS

Claims 1-77 are pending in the Application.

Claims 23-56 and 67-77 have been allowed.

Claims 1-5, 21 and 57-66 stand rejected.

Applicants respectfully assert that the amendment to claim 59, and incorporated by reference in any claims depending therefrom, is not a narrowing amendment made for a reason related to statutory requirements for a patent that will give rise to prosecution history estoppel. Instead, this is merely an amendment to correct a typographical mistake in the originally filed claims.

I. REJECTIONS UNDER 35 U.S.C. § 112§

Claims 59-64 and 66 stand rejected under 35 U.S.C. § 112, second paragraph. Applicants have amended claim 59 to correct the typographical mistake creating this § 112 rejection.

II. REJECTIONS UNDER 35 U.S.C. § 102

Claims 1-3, 5 and 21 stand rejected under 35 U.S.C. § 102(b) as being anticipated by *Chen et al.* (U.S. Patent No. 5,751,791). On page 2 of the Office Action, the Examiner asserted that claim 4 was also rejected under § 102 as being anticipated by *Chen*. However, Applicants believe this to be a typographical mistake by the Examiner since claim 4 is rejected under 35 U.S.C. § 103 as indicated below.

Applicants respectfully traverse the § 102 rejections. As the Examiner is well aware, for a claim to be anticipated under § 102 each and every element of the claim must be found within the cited prior art reference. In rejecting claim 1, the Examiner has compared the claim language to the system shown in Fig. 1 of *Chen*. Claim 1 recites that the telephony device includes circuitry for throttling data sent from the first network device. The Examiner asserts that this telephony device is

represented by telephone 80 in Fig. 1 of *Chen*. The Examiner then further asserts that "the telephony device used to dial up the connection controls the data rate at 56 kbps over the link." While it is true that *Chen* teaches that telephone 80 can be used "to facilitate dialing when the processing unit 72 is incapable of doing so directly," *Chen* does not teach that telephone 80 includes circuitry for throttling data sent from the first network device. *Chen* does not teach that telephone 80 in any way controls the data rate of data being sent between computer system 70 and LEC 102. *Chen* does not in any way teach that telephone 80 includes any type of data modem, or other similar circuitry, capable of controlling the rate of data being sent through telephone 80. All that *Chen* teaches is that telephone 80 can be used to permit a user to manually dial a telephone connection so that computer system 70 can then be connected to a device dialed by those telephone digits. Telephone 80 merely passes the data through it towards LEC 102. Moreover, *Chen* teaches that computer system 70 includes the Vistium video system having a board set that allows the PC to perform video and ISDN communications. Thus, it is the Vistium video system within computer system 70 that has an ability to control the data rate of data being sent to and from computer system 70. Therefore, telephone 80 does not include circuitry for throttling data sent from computer system 70.

Claim 21 recites that the data sent from the first network device is sufficiently throttled so that the telephony device can communicate real-time multimedia signals to and from the multimedia server. The Examiner asserts that claim 21 is rejected because in *Chen*, communication is real-time and a telephony device maintains the data rate at 56 kbps. First of all, as asserted above, the telephone 80, which the Examiner equates to the claimed telephony device, does not do any type of maintaining or controlling of the data rate. Secondly, the Examiner has not correctly interpreted claim 21. Claim 21 recites that the telephony device can communicate real-time multimedia signals to and from the multimedia server. The multimedia server is interpreted by the Examiner to be server 92 in Fig. 1 of *Chen*. There is absolutely no teaching or suggestion with *Chen* that telephone 80 communicates multimedia signals to and from server 92. Under the Examiner's rejection of claim 21, the Examiner is interpreting claim 21 to recite that computer system 70 is communicating real-time multimedia signals to and from server 92. That is not what is being recited

in claim 21. For *Chen* to anticipate claim 21, *Chen* would have to teach that telephone 80 would throttle the data being sent from computer system 70 in such a manner so that telephone 80 could communicate real-time multimedia signals between telephone 80 and server 92. *Chen* does not teach this.

Claims 57-58 and 65 stand rejected under 35 U.S.C. § 102(e) as being anticipated by *Edelson et al.* (U.S. Patent No. 6,504,926). In response, Applicants respectfully traverse this rejection. Claim 57 recites an input data port for receiving data, wherein the data is addressed for transmission to a location other than the IP telephony device that includes the input data port. The Examiner has equated this input data port as microphone 23 shown in Fig. 2 of *Edelson*. Applicants respectfully traverse this assertion by the Examiner. Again, limitations are not being addressed properly by the Examiner. Claim 57 specifically recites that the data received by the input data port is addressed for transmission to a location. Audio signals received by microphone 23 cannot in any way be "addressed" for transmission to a location. Moreover, *Edelson* does not teach this. A person cannot "address" his voice signals so that they are transmitted to the location. The Examiner's interpretation of claim 57 is unreasonably broad since the Examiner has not properly interpreted the claim language to include the fact that the data being received by the input data port is addressed for transmission to a location.

III. REJECTIONS UNDER 35 U.S.C. § 103

Claims 4 and 6 stand rejected under 35 U.S.C. § 103 as being unpatentable over *Chen* in view of *Hung et al.* (U.S. Patent No. 6,760,429). In response, Applicants respectfully traverse this rejection. Since *Chen* does not teach all of the limitations of claim 1, claims 4 and 6 are also patentable over Chen and *Hung*.

IV. ALLOWABLE SUBJECT MATTER

Applicants acknowledge the allowance of claims 23-56 and 67-77.

V. CONCLUSION

As a result of the foregoing, it is asserted by Applicants that the remaining Claims in the Application are in condition for allowance, and respectfully request an early allowance of such Claims.

Applicants respectfully request that the Examiner call Applicants' attorney at the below listed number if the Examiner believes that such a discussion would be helpful in resolving any remaining problems.

Respectfully submitted,

WINSTEAD SECHREST & MINICK P.C.

Attorneys for Applicant

By: _____
Kelly K. Kordzik
Reg. No. 36,571

P.O. Box 50784
Dallas, Texas 75201
(512) 370-2851

Application or Docket Number

PATENT APPLICATION FEE DETERMINATION RECORD
Effective October 1, 2000

09775018

CLAIMS AS FILED - PART I

	(Column 1)	(Column 2)
TOTAL CLAIMS 77		
FOR	NUMBER FILED	NUMBER EXTRA
TOTAL CHARGEABLE CLAIMS	77 minus 20=	* 57
INDEPENDENT CLAIMS	5 minus 3 =	* 2
MULTIPLE DEPENDENT CLAIM PRESENT		☐

* If the difference in column 1 is less than zero, enter "0" in column 2

SMALL ENTITY TYPE ☐		OR	OTHER THAN SMALL ENTITY	
RATE	FEE		RATE	FEE
BASIC FEE	355.00	OR	BASIC FEE	710.00
X$ 9=	513	OR	X$18=	
X40=	80	OR	X80=	
+135=		OR	+270=	
TOTAL	948	OR	TOTAL	

8/2/04

CLAIMS AS AMENDED - PART II

AMENDMENT A

	(Column 1) CLAIMS REMAINING AFTER AMENDMENT		(Column 2) HIGHEST NUMBER PREVIOUSLY PAID FOR	(Column 3) PRESENT EXTRA
Total	* 77	Minus	** 77	=
Independent	* 5	Minus	*** 5	=
FIRST PRESENTATION OF MULTIPLE DEPENDENT CLAIM				☐

SMALL ENTITY		OR	OTHER THAN SMALL ENTITY	
RATE	ADDITIONAL FEE		RATE	ADDITIONAL FEE
X$ 9=		OR	X$18=	
X40=		OR	X80=	
+135=		OR	+270=	
TOTAL ADDIT. FEE		OR	TOTAL ADDIT. FEE	

AMENDMENT B

	(Column 1) CLAIMS REMAINING AFTER AMENDMENT		(Column 2) HIGHEST NUMBER PREVIOUSLY PAID FOR	(Column 3) PRESENT EXTRA
Total	*	Minus	**	=
Independent	*	Minus	***	=
FIRST PRESENTATION OF MULTIPLE DEPENDENT CLAIM				☐

RATE	ADDITIONAL FEE		RATE	ADDITIONAL FEE
X$ 9=		OR	X$18=	
X40=		OR	X80=	
+135=		OR	+270=	
TOTAL ADDIT. FEE		OR	TOTAL ADDIT. FEE	

AMENDMENT C

	(Column 1) CLAIMS REMAINING AFTER AMENDMENT		(Column 2) HIGHEST NUMBER PREVIOUSLY PAID FOR	(Column 3) PRESENT EXTRA
Total	*	Minus	**	=
Independent	*	Minus	***	=
FIRST PRESENTATION OF MULTIPLE DEPENDENT CLAIM				☐

RATE	ADDITIONAL FEE		RATE	ADDITIONAL FEE
X$ 9=		OR	X$18=	
X40=		OR	X80=	
+135=		OR	+270=	
TOTAL ADDIT. FEE		OR	TOTAL ADDIT. FEE	

* If the entry in column 1 is less than the entry in column 2, write "0" in column 3.
** If the "Highest Number Previously Paid For" IN THIS SPACE is less than 20, enter "20."
*** If the "Highest Number Previously Paid For" IN THIS SPACE is less than 3, enter "3."
The "Highest Number Previously Paid For" (Total or Independent) is the highest number found in the appropriate box in column 1.

UNITED STATES PATENT AND TRADEMARK OFFICE

UNITED STATES DEPARTMENT OF COMMERCE
United States Patent and Trademark Office
Address: COMMISSIONER FOR PATENTS
P.O. Box 1450
Alexandria, Virginia 22313-1450
www.uspto.gov

APPLICATION NO.	FILING DATE	FIRST NAMED INVENTOR	ATTORNEY DOCKET NO.	CONFIRMATION NO.
09/775,018	02/01/2001	Eric G. Suder	16312-P005US	7490

7590 12/27/2004

Kelly K. Kordzik
Suite 800
100 Congress Avenue
Austin, TX 78701

EXAMINER	
VANDERPUYE, KENNETH N	
ART UNIT	**PAPER NUMBER**
2661	

DATE MAILED: 12/27/2004

Please find below and/or attached an Office communication concerning this application or proceeding.

PTO-90C (Rev. 10/03)

Office Action Summary	Application No.	Applicant(s)	
	09/775,018	SUDER ET AL.	
	Examiner	Art Unit	
	Kenneth N Vanderpuye	2661	

-- The MAILING DATE of this communication appears on the cover sheet with the correspondence address --

Period for Reply

A SHORTENED STATUTORY PERIOD FOR REPLY IS SET TO EXPIRE 3 MONTH(S) FROM THE MAILING DATE OF THIS COMMUNICATION.

- Extensions of time may be available under the provisions of 37 CFR 1.136(a). In no event, however, may a reply be timely filed after SIX (6) MONTHS from the mailing date of this communication.
- If the period for reply specified above is less than thirty (30) days, a reply within the statutory minimum of thirty (30) days will be considered timely.
- If NO period for reply is specified above, the maximum statutory period will apply and will expire SIX (6) MONTHS from the mailing date of this communication.
- Failure to reply within the set or extended period for reply will, by statute, cause the application to become ABANDONED (35 U.S.C. § 133). Any reply received by the Office later than three months after the mailing date of this communication, even if timely filed, may reduce any earned patent term adjustment. See 37 CFR 1.704(b).

Status

1)☐ Responsive to communication(s) filed on _____.

2a)☐ This action is **FINAL**. 2b)☒ This action is non-final.

3)☐ Since this application is in condition for allowance except for formal matters, prosecution as to the merits is closed in accordance with the practice under *Ex parte Quayle*, 1935 C.D. 11, 453 O.G. 213.

Disposition of Claims

4)☒ Claim(s) *1-77* is/are pending in the application.

4a) Of the above claim(s) _____ is/are withdrawn from consideration.

5)☒ Claim(s) *23-56 and 67-77* is/are allowed.

6)☒ Claim(s) *1-6,21,57 and 58* is/are rejected.

7)☒ Claim(s) *7-20,22 and 59-66* is/are objected to.

8)☐ Claim(s) _____ are subject to restriction and/or election requirement.

Application Papers

9)☐ The specification is objected to by the Examiner.

10)☐ The drawing(s) filed on _____ is/are: a)☐ accepted or b)☐ objected to by the Examiner.

Applicant may not request that any objection to the drawing(s) be held in abeyance. See 37 CFR 1.85(a).

Replacement drawing sheet(s) including the correction is required if the drawing(s) is objected to. See 37 CFR 1.121(d).

11)☐ The oath or declaration is objected to by the Examiner. Note the attached Office Action or form PTO-152.

Priority under 35 U.S.C. § 119

12)☐ Acknowledgment is made of a claim for foreign priority under 35 U.S.C. § 119(a)-(d) or (f).

a)☐ All b)☐ Some * c)☐ None of:

1.☐ Certified copies of the priority documents have been received.

2.☐ Certified copies of the priority documents have been received in Application No. _____.

3.☐ Copies of the certified copies of the priority documents have been received in this National Stage application from the International Bureau (PCT Rule 17.2(a)).

* See the attached detailed Office action for a list of the certified copies not received.

Attachment(s)

1) ☒ Notice of References Cited (PTO-892)
2) ☐ Notice of Draftsperson's Patent Drawing Review (PTO-948)
3) ☐ Information Disclosure Statement(s) (PTO-1449 or PTO/SB/08) Paper No(s)/Mail Date _____.
4) ☐ Interview Summary (PTO-413) Paper No(s)/Mail Date. _____ .
5) ☐ Notice of Informal Patent Application (PTO-152)
6) ☐ Other: _____.

DETAILED ACTION

Claim Rejections - 35 USC § 102

The following is a quotation of the appropriate paragraphs of 35 U.S.C. 102 that form the basis for the rejections under this section made in this Office action:

> A person shall be entitled to a patent unless –
>
> (b) the invention was patented or described in a printed publication in this or a foreign country or in public use or on sale in this country, more than one year prior to the date of application for patent in the United States.

Claims 1-3, 5, 21 are rejected under 35 U.S.C. 102(b) as being anticipated by Chen et al.(5,751,791).

With regards to claims 1, Chen teaches a system comprising: a hub(Fig. 1@90), a multimedia server(Fig. 1@92), a telephony device coupled to the hub(Fig. 1@102 or132, either LEC or PBX can be considered a telephony device), and a first network device coupled to the hub through the telephony device(Fig. 1@70a, 128), wherein the telephony device includes circuitry for throttling data sent from the first network device(the DDS/DATAPATH is 56 Kbps and the PRI/T1/SW56 is 65kps).

Claim 2 is rejected because Chen teaches a second network device connected to the hub, wherein data sent from the first network device is addressed for transmission to the second network device(Fig. 1@70c, the

system in Fig. 1 is set up in such a way that enables device 70c to communicate with device 70a)

Claims 3, 5 are rejected because all devices are all coupled together via an ISDN network, BRI, PRI.

Claim 21 is rejected because in Chen communication is realtime and the telephony device maintains the data rate at 56kbps.

The following is a quotation of the appropriate paragraphs of 35 U.S.C. 102 that form the basis for the rejections under this section made in this Office action:

> A person shall be entitled to a patent unless –
>
> (e) the invention was described in (1) an application for patent, published under section 122(b), by another filed in the United States before the invention by the applicant for patent or (2) a patent granted on an application for patent by another filed in the United States before the invention by the applicant for patent, except that an international application filed under the treaty defined in section 351(a) shall have the effects for purposes of this subsection of an application filed in the United States only if the international application designated the United States and was published under Article 21(2) of such treaty in the English language.

Claims 57-58 are rejected under 35 U.S.C. 102(e) as being anticipated by Schuster et al.(6,785,261)

With regards to claim 57 Schuster teaches an IP telephony device(Fig. 2) comprising:

an input data port for receiving data(Fig. 2@14), wherein the data is addressed for transmission to a location other than the IP telephony device(Fig. 2 telephone call made to a remote location over internet) ;

circuitry for communicating information to and from the IP telephony device(Fig. 2@14, 12, 16) and circuitry for sufficiently throttling the data so that the communication of the information can be performed real-time. (inherently taught because VOIP data is being sent out realtime using RTP protocol).

Claim 58 is rejected because the IP telephony device communicates using TCP/IP protocol.

Claim Rejections - 35 USC § 103

The following is a quotation of 35 U.S.C. 103(a) which forms the basis for all obviousness rejections set forth in this Office action:

> (a) A patent may not be obtained though the invention is not identically disclosed or described as set forth in section 102 of this title, if the differences between the subject matter sought to be patented and the prior art are such that the subject matter as a whole would have been obvious at the time the invention was made to a person having ordinary skill in the art to which said subject matter pertains. Patentability shall not be negatived by the manner in which the invention was made.

Claims 4, 6 are rejected under 35 U.S.C. 103(a) as being unpatentable over Chen et al. in view of Hung et al.(6,760,429)

With regards to claims 4, 6 Chen fails to teach a TCP/IP network or the multimedia server and the telephony device communicating using IP protocol. The network in Chen is a packet network however it is not TCP/IP.. Hung et al teaches an IP network with a telephony device and a

multimedia sever communicating using TCP/IP protocol. It would have been obvious to one of ordinary skill in the art to combine Chen with Hung for the purpose of sending multimedia messages over an IP network. The motivation being the use of a connection oriented network for multimedia communications.

Allowable Subject Matter

Claims 23-56, 67-77are allowed.

Claims 7-20, 22, 59-66 are objected to as being dependent upon a rejected base claim, but would be allowable if rewritten in independent form including all of the limitations of the base claim and any intervening claims.

Any inquiry concerning this communication or earlier communications from the examiner should be directed to Kenneth N Vanderpuye whose telephone number is 703-308-7828. The examiner can normally be reached on M-F(7:30-5:00) Second Friday Off.

Information regarding the status of an application may be obtained from the Patent Application Information Retrieval (PAIR) system. Status information for published applications may be obtained from either Private PAIR or Public PAIR. Status information for unpublished applications is available through Private PAIR only. For more information about the PAIR system, see http://pair-direct.uspto.gov. Should you have questions on access to the Private PAIR system, contact the Electronic Business Center (EBC) at 866-217-9197 (toll-free).

KNV
12/18/04

/KENNETH VANDERPUYE
PRIMARY EXAMINER

Notice of References Cited	Application/Control No. 09/775,018	Applicant(s)/Patent Under Reexamination SUDER ET AL.	
	Examiner Kenneth N Vanderpuye	Art Unit 2661	Page 1 of 1

U.S. PATENT DOCUMENTS

*		Document Number Country Code-Number-Kind Code	Date MM-YYYY	Name	Classification
	A	US-6,785,261 B1	08-2004	Schuster et al.	370/352
	B	US-6,735,209 B1	05-2004	Cannon et al.	370/401
	C	US-6,515,996 B1	02-2003	Tonnby et al.	370/401
	D	US-			
	E	US-			
	F	US-			
	G	US-			
	H	US-			
	I	US-			
	J	US-			
	K	US-			
	L	US-			
	M	US-			

FOREIGN PATENT DOCUMENTS

*		Document Number Country Code-Number-Kind Code	Date MM-YYYY	Country	Name	Classification
	N					
	O					
	P					
	Q					
	R					
	S					
	T					

NON-PATENT DOCUMENTS

*		Include as applicable: Author, Title Date, Publisher, Edition or Volume, Pertinent Pages)
	U	
	V	
	W	
	X	

*A copy of this reference is not being furnished with this Office action. (See MPEP § 707.05(a).)
Dates in MM-YYYY format are publication dates. Classifications may be US or foreign.

Index of Claims

Application No.	Applicant(s)
09/775,018	SUDER ET AL.
Examiner	**Art Unit**
Kenneth N Vanderpuye	2661

√	Rejected	–	(Through numeral) Cancelled	N	Non-Elected	A	Appeal
=	Allowed	+	Restricted	I	Interference	O	Objected

Claim		Date
Final	Original	12/18/04
	1	√
	2	√
	3	√
	4	√
	5	√
	6	√
	7	O
	8	
	9	
	10	
	11	
	12	
	13	
	14	
	15	
	16	
	17	
	18	
	19	
	20	√
	21	
	22	O
	23	=
	24	
	25	
	26	
	27	
	28	
	29	
	30	
	31	
	32	
	33	
	34	
	35	
	36	
	37	
	38	
	39	
	40	
	41	
	42	
	43	
	44	
	45	
	46	
	47	
	48	
	49	
	50	√

Claim		Date
Final	Original	
	51	T
	52	
	53	
	54	
	55	
	56	√
	57	√
	58	√
	59	O
	60	
	61	
	62	
	63	
	64	
	65	
	66	√
	67	=
	68	
	69	
	70	
	71	
	72	
	73	
	74	
	75	
	76	
	77	√
	78	
	79	
	80	
	81	
	82	
	83	
	84	
	85	
	86	
	87	
	88	
	89	
	90	
	91	
	92	
	93	
	94	
	95	
	96	
	97	
	98	
	99	
	100	

Claim		Date
Final	Original	
	101	
	102	
	103	
	104	
	105	
	106	
	107	
	108	
	109	
	110	
	111	
	112	
	113	
	114	
	115	
	116	
	117	
	118	
	119	
	120	
	121	
	122	
	123	
	124	
	125	
	126	
	127	
	128	
	129	
	130	
	131	
	132	
	133	
	134	
	135	
	136	
	137	
	138	
	139	
	140	
	141	
	142	
	143	
	144	
	145	
	146	
	147	
	148	
	149	
	150	

UNITED STATES PATENT AND TRADEMARK OFFICE

COMMISSIONER FOR PATENTS
UNITED STATES PATENT AND TRADEMARK OFFICE
WASHINGTON, D.C. 20231
www.uspto.gov

Bib Data Sheet

CONFIRMATION NO. 7490

SERIAL NUMBER	FILING DATE	CLASS	GROUP ART UNIT	ATTORNEY DOCKET NO.
09/775,018	02/01/2001 RULE	370	2661	16312-P005US

APPLICANTS

Eric G. Suder, Plano, TX;
Harold E.A. Hansen II, Plano, TX;

** CONTINUING DATA ********** N/A

** FOREIGN APPLICATIONS ********** N/A

IF REQUIRED, FOREIGN FILING LICENSE GRANTED ** 03/09/2001

** SMALL ENTITY **

		STATE OR COUNTRY	SHEETS DRAWING	TOTAL CLAIMS	INDEPENDENT CLAIMS
Foreign Priority claimed	☐ yes ☑ no	TX	13	77	5
35 USC 119 (a-d) conditions met	☐ yes ☑ no ☐ Met after Allowance				
Verified and Acknowledged	Examiner's Signature Initials				

ADDRESS

Kelly K. Kordzik
Suite 800
100 Congress Avenue
Austin ,TX 78701

TITLE

Quality of service in a voice over IP telephone system

FILING FEE RECEIVED	FEES: Authority has been given in Paper	
1013	No. _____ to charge/credit DEPOSIT ACCOUNT No. _____ for following:	☐ All Fees ☐ 1.16 Fees (Filing) ☐ 1.17 Fees (Processing Ext. of time) ☐ 1.18 Fees (Issue) ☐ Other _____ ☐ Credit

2661

OIPE JC106 MAR 24 2005 PATENT & TRADEMARK OFFICE

PTO/SB/21 (09-04)
Approved for use through 07/31/2006. OMB 0651-0031
U.S. Patent and Trademark Office; U.S. DEPARTMENT OF COMMERCE
Under the Paperwork Reduction Act of 1995, no persons are required to respond to a collection of information unless it displays a valid OMB control number.

TRANSMITTAL FORM

(to be used for all correspondence after initial filing)

Total Number of Pages in This Submission: 21

Application Number	09/775,018
Filing Date	02/01/2001
First Named Inventor	Eric Suder
Art Unit	2661
Examiner Name	Kenneth Vanderpuye
Attorney Docket Number	16312-P005US

ENCLOSURES *(Check all that apply)*

- [x] Fee Transmittal Form
- [x] Fee Attached
- [x] Amendment/Reply
- [ ] After Final
- [ ] Affidavits/declaration(s)
- [ ] Extension of Time Request
- [ ] Express Abandonment Request
- [ ] Information Disclosure Statement
- [ ] Certified Copy of Priority Document(s)
- [ ] Reply to Missing Parts/ Incomplete Application
- [ ] Reply to Missing Parts under 37 CFR 1.52 or 1.53
- [ ] Drawing(s)
- [ ] Licensing-related Papers
- [ ] Petition
- [ ] Petition to Convert to a Provisional Application
- [ ] Power of Attorney, Revocation Change of Correspondence Address
- [ ] Terminal Disclaimer
- [ ] Request for Refund
- [ ] CD, Number of CD(s) _____
- [ ] Landscape Table on CD
- [ ] After Allowance Communication to TC
- [ ] Appeal Communication to Board of Appeals and Interferences
- [ ] Appeal Communication to TC **(Appeal Notice, Brief, Reply Brief)**
- [ ] Proprietary Information
- [ ] Status Letter
- [x] Other Enclosure(s) (please Identify below):

Return Postcard

Remarks

SIGNATURE OF APPLICANT, ATTORNEY, OR AGENT

Firm Name	Winstead Sechrest & Minick P.C.		
Signature			
Printed name	Kelly K. Kordzik		
Date	3-21-05	Reg. No.	36,571

CERTIFICATE OF TRANSMISSION/MAILING

I hereby certify that this correspondence is being facsimile transmitted to the USPTO or deposited with the United States Postal Service with sufficient postage as first class mail in an envelope addressed to: Mail Stop Amendment, Commissioner for Patents, P.O. Box 1450, Alexandria, VA 22313-1450 on the date shown below:

Signature	Toni Stanley		
Typed or printed name	Toni Stanley	Date	3-21-05

This collection of information is required by 37 CFR 1.5. The information is required to obtain or retain a benefit by the public which is to file (and by the USPTO to process) an application. Confidentiality is governed by 35 U.S.C. 122 and 37 CFR 1.11 and1.14. This collection is estimated to 2 hours to complete, including gathering, preparing, and submitting the completed application form to the USPTO. Time will vary depending upon the individual case. Any comments on the amount of time you require to complete this form and/or suggestions for reducing this burden, should be sent to the Chief Information Officer, U.S. Patent and Trademark Office, U.S. Department of Commerce, P.O. Box 1450, Alexandria, VA 22313-1450. DO NOT SEND FEES OR COMPLETED FORMS TO THIS ADDRESS. **SEND TO: Commissioner for Patents, P.O. Box 1450, Alexandria, VA 22313-1450.**

If you need assistance in completing the form, call 1-800-PTO-9199 and select option 2.

OIPE JC106 MAR 24 2005 PATENT & TRADEMARK OFFICE

PTO/SB/17 (11-04)
Approved for use through 07/31/2006. OMB 0651-0032
U.S. Patent and Trademark Office; U.S. DEPARTMENT OF COMMERCE
Under the Paperwork Reduction Act of 1995 no persons are required to respond to a collection of information unless it displays a valid OMB control number

Effective on 10/01/2004. Patent fees are subject to annual revision.

FEE TRANSMITTAL
For FY 2005

☑ Applicant claims small entity status. See 37 CFR 1.27

TOTAL AMOUNT OF PAYMENT ($) **300.00**

Complete if Known	
Application Number	09/775,018
Filing Date	02/01/2001
First Named Inventor	Suder et al.
Examiner Name	Kenneth Vanderpuye
Art Unit	2661
Attorney Docket No.	16312-P005US

METHOD OF PAYMENT (check all that apply)

☑ Check ☐ Credit Card ☐ Money Order

☑ Deposit Account ☐ None

Deposit Account Number: 23-2426

Deposit Account Name: Winstead Sechrest & Minick P.C.

The Director is hereby authorized to: (check all that apply)

☐ Charge fee(s) indicated below

☐ Charge fee(s) indicated below, **except for the filing fee**

☑ Charge any additional fee(s) or underpayments of fee(s) under 37 CFR 1.16 and 1.17

☑ Credit any overpayments

to the above-identified deposit account.

☐ Other (please identify): _____

WARNING: Information on this form may become public. Credit card information should not be included on this form. Provide credit card information and authorization on PTO-2038.

FEE CALCULATION

1. BASIC FILING FEE

Fee Description	Fee ($)	Small Entity Fee ($)	Fee Paid($)
Utility Filing Fee	790	395	
Design Filing Fee	350	175	
Plant Filing Fee	550	275	
Reissue Filing Fee	790	395	
Provisional Filing Fee	160	80	

Subtotal (1) $ _____

FEE CALCULATION (continued)

2. EXTRA CLAIM FEES

Fee Description	Fee ($)	Small Entity Fee ($)
Each claim over 20	50	25
Each independent claim over 3	200	100
Multiple dependent claims	360	180
For Reissues, each claim over 20 and more than in the original patent	50	25
For Reissues, each independent claim more than in the original patent	200	100

Total Claims	Extra Claims	Fee ($)	Fee Paid ($)
75 - 77 or HP =	0	x 25 =	0

HP = highest number of total claims paid for, if greater than 20

Indep. Claims	Extra Claims	Fee ($)	Fee Paid ($)
8 - 5 or HP =	3	x 100 =	300

HP = highest number of independent claims paid for, if greater than 3

Multiple Dependent Claims	Fee ($)	Fee Paid ($)

Subtotal (2) $ 300

3. OTHER FEES

Fee Description	Fee ($)	Small Entity Fee ($)	Fee Paid($)
1-month extension of time	120	60	
2-month extension of time	450	225	
3-month extension of time	1,020	510	
4-month extension of time	1,590	795	
5-month extension of time	2,160	1,080	
Information disclosure stmt. fee	180	180	
37 CFR 1.17(q) processing fee	50	50	
Non-English specification	130	130	
Notice of Appeal	500	250	
Filing a brief in support of appeal	500	250	
Request for oral hearing	1,000	500	
Other: _____			

Subtotal (3) $ _____

SUBMITTED BY

Signature		Registration No. (Attorney/Agent) 36.571	Telephone 512.370.2851
Name (Print/Type)	Kelly K. Kordzik		Date 3-21-05

This collection of information is required by 37 CFR 1.136. The information is required to obtain or retain a benefit by the public which is to file (and by the USPTO to process) an application. Confidentiality is governed by 35 U.S.C. 122 and 37 CFR 1.14. This collection is estimated to take 30 minutes to complete, including gathering, preparing, and submitting the completed application form to the USPTO. Time will vary depending upon the individual case. Any comments on the amount of time you require to complete this form and/or suggestions for reducing this burden, should be sent to the Chief Information Officer, U.S. Patent and Trademark Office, U.S. Department of Commerce, P.O. Box 1450, Alexandria, VA 22313-1450. DO NOT SEND FEES OR COMPLETED FORMS TO THIS ADDRESS. **SEND TO: Commissioner for Patents, P.O. Box 1450, Alexandria, VA 22313-1450.**

If you need assistance in completing the form, call 1-800-PTO-9199 and select option 2.

IN THE UNITED STATES PATENT AND TRADEMARK OFFICE

In re Application:	Suder et al.
Serial No.:	09/775,018
Filed:	February 1, 2001
Art Unit:	2661
Examiner:	Kenneth Vanderpuye
For:	QUALITY OF SERVICE IN A VOICE OVER IP TELEPHONE SYSTEM

SECOND AMENDMENT UNDER 37 C.F.R. § 1.111

Mail Stop Amendment
Commissioner for Patents
P.O. Box 1450
Alexandria, VA 22313-1450

Dear Sir:

In response to the Office Action having a mailing date of December 27, 2004, with a three-month shortened statutory period for response set to expire on March 27, 2005, please amend the above-identified Application as follows:

CERTIFICATION UNDER 37 C.F.R. § 1.8

I hereby certify that this correspondence is being deposited with the United States Postal Service with sufficient postage as first class mail in an envelope addressed to Mail Stop Amendment, Commissioner for Patents, P.O. Box 1450, Alexandria, VA 22313-1450, on 3-21, 2005.

Toni Stanley
Signature

Toni Stanley
(Printed name of person certifying)

03/24/2005 EAREGAY1 00000035 09775018
01 FC:2201 300.00 OP

IN THE CLAIMS

Please rewrite the claims as follows:

1. (currently amended) An information handling system comprising:

a hub;

a multimedia server coupled to the hub;

a telephony device coupled to the hub; and

a first network device coupled to the hub through the telephony device, wherein the telephony device includes circuitry for throttling data sent from the first network device, wherein the throttling circuitry reduces a future amount of data from being transferred from the first network device if the amount of data exceeds a predetermined threshold.

2. (original) The system as recited in claim 1, further comprising:

a second network device coupled to the hub, wherein the data sent from the first network device is addressed for transmission to the second network device.

3. (original) The system as recited in claim 2, wherein the hub, multimedia server, second network device, telephony device, and first network device are coupled to each other via a network.

4. (original) The system as recited in claim 3, wherein the network is a TCP/IP network.

5. (original) The system as recited in claim 4, wherein the network is a packet switched network.

6. (original) The system as recited in claim 3, wherein the telephony device and multimedia server communicate using an IP protocol.

7. (cancelled)

8. (currently amended) ~~The system as recited in claim 1~~ An information handling system comprising:

a hub;

a multimedia server coupled to the hub;

a telephony device coupled to the hub; and

a first network device coupled to the hub through the telephony device, wherein the telephony device includes circuitry for throttling data sent from the first network device, wherein the telephony device includes circuitry for monitoring an amount of data addressed to and received by the telephony device, wherein the throttling circuitry reduces a future amount of data from being transferred from the first network device if the amount of data addressed to and received by the telephony device falls below a predetermined threshold.

9. (original) The system as recited in claim 8, wherein the monitoring circuitry comprises a jitter buffer where the predetermined threshold is a predetermined level within the jitter buffer.

10. (original) The system as recited in claim 8, wherein the monitoring circuitry further comprises circuitry for sending a congestion message to the multimedia server when the amount

of data addressed to and received by the telephony device falls below the predetermined threshold.

11. (original) The system as recited in claim 10, wherein the multimedia server further comprises circuitry for sending a throttling signal to the telephony device in response to receipt of the congestion message from the monitoring circuitry.

12. (original) The system as recited in claim 11, wherein the throttling circuitry in the telephony device throttles the future amount of data sent from the first network device in response to receipt of the throttling signal.

13. (original) The system as recited in claim 12, wherein the throttling signal includes a mode level in which the throttling circuitry should operate.

14. (original) The system as recited in claim 13, wherein the throttling circuitry adjusts its level of throttling of the data in response to the mode level included in the throttling signal.

15. (original) The system as recited in claim 14, wherein the mode level is a most aggressive mode, wherein the throttling circuitry will throttle the future amount of data sent from the first network device at a highest level in response to the mode level being in the most aggressive mode.

16. (original) The system as recited in claim 15, wherein the sending circuitry in the multimedia server will designate the mode level at the most aggressive mode as long as the

congestion message is received from any telephony device coupled to the multimedia server within a specified time period.

17. (original) The system as recited in claim 16, wherein the throttling signal will switch to a least aggressive mode if the congestion message is not received from any telephony device coupled to the multimedia server within the specified time period.

18. (original) The system as recited in claim 17, wherein the throttling circuitry will throttle the future amount of data sent from the first network device at a level lower than the highest level in response to the mode level being in the least aggressive mode.

19. (original) The system as recited in claim 18, wherein the throttling signal will contain a signal to stop the throttling of the future amount of data if the congestion message is not received from any telephony device coupled to the multimedia server within the specified time period while the mode level has been in the least aggressive mode.

20. (original) The system as recited in claim 19, further comprising another telephony device coupled between the hub and a second network device, wherein the telephony device also includes throttling circuitry for throttling a future amount of data sent from the second network device in response to receipt of the throttling signal.

21. (original) The system as recited in claim 1, wherein the data sent from the first network device is sufficiently throttled so that the telephony device can communicate real-time multimedia signals to and from the multimedia server.

22. (currently amended) ~~The system as recited in claim 1~~ An information handling system comprising:

a hub;

a multimedia server coupled to the hub;

a telephony device coupled to the hub; and

a first network device coupled to the hub through the telephony device, wherein the telephony device includes circuitry for throttling data sent from the first network device, wherein the throttling results in no data being sent from the first network device to the telephony device.

23. (original) An information handling system comprising:

a TCP/IP network;

a hub;

a multimedia server coupled to the hub via the TCP/IP network;

a first IP telephony device coupled to the hub via the TCP/IP network;

a first network device coupled to the first IP telephony device;

a second network device coupled to the hub via the TCP/IP network, wherein data sent from the first network device is addressed for transmission to the second network device and is transmitted through the first IP telephony device to the TCP/IP network, wherein the first IP telephony device includes first circuitry for monitoring if an amount of multimedia data being addressed to the IP telephony device and received over the TCP/IP network falls below a first predetermined threshold, wherein the first IP telephony device includes first circuitry for throttling the data sent from the first network device in response to the first monitoring circuitry determining that the amount of

multimedia data being received by the first IP telephony device over the TCP/IP network falls below the first predetermined threshold.

24. (original) The system as recited in claim 23, further comprising:

a second IP telephony device coupled to the hub via the TCP/IP network; and

a third network device coupled to the second IP telephony device, wherein data sent from the third network device is addressed for transmission to the second network device and is transmitted through the second IP telephony device to the TCP/IP network,

wherein the second IP telephony device includes second circuitry for throttling the data sent from the third network device in response to the first monitoring circuitry determining that the amount of multimedia data being received by the first IP telephony device over the TCP/IP network falls below the first predetermined threshold.

25. (original) The system as recited in claim 24, wherein the first monitoring circuitry further comprises first circuitry for sending a first congestion message to the multimedia server over the TCP/IP network when the amount of multimedia data being received by the first IP telephony device over the TCP/IP network falls below the first predetermined threshold.

26. (original) The system as recited in claim 25, wherein the multimedia server further comprises circuitry for sending a throttling signal to the first and second IP telephony devices over the TCP/IP network in response to receipt of the first congestion message from the first monitoring circuitry.

27. (original) The system as recited in claim 26, wherein the first throttling circuitry in the first IP telephony device throttles the data sent from the first network device in response to receipt of the throttling signal, wherein the second throttling circuitry in the second IP telephony device throttles the data sent from the third network device in response to receipt of the throttling signal.

28. (original) The system as recited in claim 27, wherein the throttling signal includes a mode level in which the first and second throttling circuitries should operate.

29. (original) The system as recited in claim 28, wherein the first throttling circuitry adjusts its level of throttling of the data in response to the mode level included in the throttling signal, wherein the second throttling circuitry adjusts its level of throttling of the data in response to the mode level included in the throttling signal.

30. (original) The system as recited in claim 29, wherein the mode level is a most aggressive mode, wherein the first throttling circuitry will throttle the data sent from the first network device at a highest level in response to the mode level being in the most aggressive mode, wherein the second throttling circuitry will throttle the data sent from the third network device at a highest level in response to the mode level being in the most aggressive mode.

31. (original) The system as recited in claim 30, wherein the second IP telephony device includes second circuitry for monitoring if a second amount of multimedia data being received by the second IP telephony device over the TCP/IP network falls below a second predetermined threshold, wherein the second monitoring circuitry further comprises second circuitry for sending a second congestion message to the multimedia server over the TCP/IP network when the second

amount of multimedia data being received by the second IP telephony device over the TCP/IP network falls below the second predetermined threshold.

32. (original) The system as recited in claim 31, wherein the sending circuitry in the multimedia server will designate the mode level at the most aggressive mode as long as the first or second congestion messages are received within a specified time period.

33. (original) The system as recited in claim 31, wherein the throttling signal will switch to a least aggressive mode if the congestion message is not received from any IP telephony device coupled to the multimedia server within the specified time period.

34. (original) The system as recited in claim 32, wherein the throttling circuitry will throttle the data sent from the second network device at a level lower than the highest level in response to the mode level being in the least aggressive mode.

35. (original) The system as recited in claim 33, wherein the throttling signal will contain a signal to stop the throttling of the data if the congestion message is not received from any IP telephony device coupled to the multimedia server within the specified time period while the mode level has been in the least aggressive mode.

36. (original) The system as recited in claim 34, wherein the multimedia data includes real-time audio information.

37. (original) The system as recited in claim 23, wherein the data sent from the first network device is sufficiently throttled so that the first IP telephony device can communicate real-time signals to and from the multimedia server over the TCP/IP network.

38. (original) In an information handling system comprising a hub, a multimedia server ("multimedia server") coupled to the hub, a telephone coupled to the hub, a workstation coupled to the hub through the telephone, and a data server coupled to the hub, a method comprising the steps of:

transferring data from the workstation to the telephone, wherein the data sent from the workstation is addressed for transmission to the data server;

communicating audio information between the telephone and the multimedia server; and

sufficiently throttling the data sent from the workstation to the telephone to increase a rate of transfer of the audio information during the communicating step.

39. (original) The method as recited in claim 38, wherein the hub, multimedia server, data server, telephone, and workstation are coupled to each other via a network.

40. (original) The method as recited in claim 39, wherein the network is a TCP/IP network.

41. (original) The method as recited in claim 39, wherein the network is a packet switched network.

42. (original) The method as recited in claim 39, wherein the telephone and multimedia server communicate using an IP protocol.

43. (original) The method as recited in claim 38, wherein the throttling step further comprises the step of reducing a future amount of data from being transferred from the workstation if the amount of data exceeds a predetermined threshold.

44. (original) The method as recited in claim 38, wherein the throttling step further comprises the step of monitoring an amount of the audio information being received by the telephone from the multimedia server.

45. (original) The method as recited in claim 44, wherein the monitoring step further comprises the step of monitoring a predetermined level within a jitter buffer.

46. (original) The method as recited in claim 44, wherein the monitoring step further comprises the step of the telephone sending a congestion message to the multimedia server when the amount of the audio information falls below the predetermined level.

47. (original) The method as recited in claim 46, further comprising the step of the multimedia server sending a throttling signal to the telephone in response to receipt of the congestion message.

48. (original) The method as recited in claim 47, wherein the throttling step operates in response to receipt of the throttling signal.

49. (original) The method as recited in claim 48, wherein the throttling signal includes a mode level.

50. (original) The method as recited in claim 49, wherein the throttling step further comprises the step of adjusting a level of throttling of the data in response to the mode level included in the throttling signal.

51. (original) The method as recited in claim 50, wherein the step of the multimedia server sending a throttling signal to the telephone in response to receipt of the congestion message further comprises the step of setting the mode level to a most aggressive mode, wherein the throttling step will throttle the future amount of data sent from the workstation at a highest level in response to the mode level being in the most aggressive mode.

52. (original) The method as recited in claim 51, wherein the setting step will designate the mode level at the most aggressive mode as long as the congestion message is received from any telephone coupled to the multimedia server within a specified time period.

53. (original) The method as recited in claim 52, wherein the step of the multimedia server sending a throttling signal to the telephone in response to receipt of the congestion message further comprises the step of setting the mode level to a least aggressive mode if the congestion

message is not received from any telephone coupled to the multimedia server within the specified time period.

54. (original) The method as recited in claim 53, wherein the throttling step will throttle the future amount of data sent from the workstation at a level lower than the highest level in response to the mode level being in the least aggressive mode.

55. (original) The method as recited in claim 54, wherein the step of the multimedia server sending a throttling signal to the telephone in response to receipt of the congestion message further comprises the step of sending a message to stop the throttling of the future amount of data if the congestion message is not received from any telephone coupled to the multimedia server within the specified time period while the mode level has been in the least aggressive mode.

56. (original) The method as recited in claim 38, wherein the throttling results in no data being sent from the workstation to the telephone.

57. (currently amended) An IP telephony device comprising:

an input data port for receiving data, wherein the data is addressed for transmission to a location other than the IP telephony device;

circuitry for communicating information to and from the IP telephony device; ~~and~~

circuitry for sufficiently throttling the data so that the communication of the information can be performed in real-time;

a microphone;

a speaker; and

circuitry for communicating the audio information to the speaker and from the microphone.

58. (original) The IP telephony device as recited in claim 57, wherein the IP telephony device communicates the information using an IP protocol.

59. (currently amended) ~~The IP telephony device as recited in claim 58~~ An IP telephony device comprising:

an input data port for receiving data, wherein the data is addressed for transmission to a location other than the IP telephony device;

circuitry for communicating information to and from the IP telephony device;

circuitry for sufficiently throttling the data so that the communication of the information can be performed in real-time, wherein the IP telephony device communicates the information using an IP protocol, wherein the throttling circuitry further comprises circuitry for sending a congestion message from a data output port when the amount of the information being received by the IP telephony device falls below a predetermined level.

60. (original) The IP telephony device as recited in claim 59, wherein the throttling circuitry throttles the future amount of data received at the input data port in response to receipt of a throttling signal at the input data port, wherein the throttling signal is a function of the congestion message.

61. (original) The IP telephony device as recited in claim 60, wherein the throttling signal includes a mode level in which the throttling circuitry should operate.

62. (original) The IP telephony device as recited in claim 61, wherein the throttling circuitry adjusts its level of throttling of the data in response to the mode level included in the throttling signal.

63. (original) The IP telephony device as recited in claim 62, wherein when the mode level is a most aggressive mode, the throttling circuitry will throttle the future amount of data at a highest level in response to the mode level being in the most aggressive mode.

64. (original) The IP telephony device as recited in claim 63, wherein the throttling circuitry will throttle the future amount of data sent from the workstation at a level lower than the highest level in response to the mode level being in a least aggressive mode.

65. (cancelled)

66. (original) The IP telephony device as recited in claim 60, further comprising:

a microphone;

a speaker; and

circuitry for communicating the audio information to the speaker and from the microphone.

67. (original) A multimedia server comprising:

a network connection for connecting the multimedia server to a data network;

circuitry operable for communicating audio information with a telephone connected to the data network;

circuitry operable for sending a throttling signal onto the data network in response to receipt of a congestion message from the data network.

68. (original) The multimedia server as recited in claim 67, wherein the network is a TCP/IP network.

69. (original) The multimedia server as recited in claim 67, wherein the network is a packet switched network.

70. (original) The multimedia server as recited in claim 67, wherein the communicating circuitry further comprises circuitry operable for communicating the audio information using an IP protocol.

71. (original) The multimedia server as recited in claim 68, wherein the throttling signal includes a mode level.

72. (original) The multimedia server as recited in claim 71, wherein the sending circuitry will designate the mode level at a most aggressive mode as long as the congestion message is received within a specified time period.

73. (original) The multimedia server as recited in claim 72, wherein the throttling signal will switch to a least aggressive mode if the congestion message is not received within the specified time period.

74. (original) The multimedia server as recited in claim 73, wherein the throttling signal will contain a stop data throttling signal if the congestion message is not received within the specified time period while the mode level has been in the least aggressive mode.

75. (original) The multimedia server as recited in claim 67, further comprising:

a peripheral card adaptable for coupling to a telecommunications network.

76. (original) The multimedia server as recited in claim 75, wherein the telecommunications network is a public switched telephone network.

77. (original) The multimedia server as recited in claim 75, further comprising:

switching circuitry for communicating the audio information between the network connection and the peripheral card.

REMARKS

Claims 1-77 are pending in the Application.

Claims 23-56 and 67-77 have been allowed.

Claims 1-6, 21 and 57-58 stand rejected.

Claims 7-20, 22 and 59-66 are objected to.

I. REJECTIONS UNDER 35 U.S.C. § 102

Claims 1-3, 5 and 21 stand rejected under 35 U.S.C. § 102(b) as being anticipated by *Chen et al.* (U.S. Patent No. 5,751,791). Since these claims have been amended to be in allowable form per the objected to claims, these rejections are moot.

Claims 57-58 and 65 stand rejected under 35 U.S.C. § 102(e) as being anticipated by *Schuster et al.* (U.S. Patent No. 6,785,261). Since these claims have been amended to be in allowable form per the objected to claims, these rejections are moot.

II. REJECTIONS UNDER 35 U.S.C. § 103

Claims 4 and 6 stand rejected under 35 U.S.C. § 103 as being unpatentable over *Chen* in view of *Hung et al.* (U.S. Patent No. 6,760,429). Since these claims have been amended to be in allowable form per the objected to claims, these rejections are moot.

III. CONCLUSION

As a result of the foregoing, it is asserted by Applicants that the remaining Claims in the Application are in condition for allowance, and respectfully request an early allowance of such Claims.

Applicants respectfully request that the Examiner call Applicants' attorney at the below listed number if the Examiner believes that such a discussion would be helpful in resolving any remaining problems.

Respectfully submitted,

WINSTEAD SECHREST & MINICK P.C.

Attorneys for Applicant

By: _____
Kelly K. Kordzik
Reg. No. 36,571

P.O. Box 50784
Dallas, Texas 75201
(512) 370-2851

Austin_1\276139\1
16312-P005US 3/17/2005

Application or Docket Number: 09775018

PATENT APPLICATION FEE DETERMINATION RECORD
Effective October 1, 2000

CLAIMS AS FILED - PART I

	(Column 1)	(Column 2)
TOTAL CLAIMS 77		
FOR	NUMBER FILED	NUMBER EXTRA
TOTAL CHARGEABLE CLAIMS	77 minus 20=	* 57
INDEPENDENT CLAIMS	5 minus 3 =	* 2
MULTIPLE DEPENDENT CLAIM PRESENT		☐

* If the difference in column 1 is less than zero, enter "0" in column 2

SMALL ENTITY TYPE ☐		OR	OTHER THAN SMALL ENTITY	
RATE	FEE		RATE	FEE
BASIC FEE	355.00	OR	BASIC FEE	710.00
X$ 9=	513	OR	X$18=	
X40=	80	OR	X80=	
+135=		OR	+270=	
TOTAL	948	OR	TOTAL	

8/2/04

CLAIMS AS AMENDED - PART II

AMENDMENT A	(Column 1) CLAIMS REMAINING AFTER AMENDMENT		(Column 2) HIGHEST NUMBER PREVIOUSLY PAID FOR	(Column 3) PRESENT EXTRA
Total	* 77	Minus	** 77	=
Independent	* 5	Minus	*** 5	=
FIRST PRESENTATION OF MULTIPLE DEPENDENT CLAIM				☐

SMALL ENTITY		OR	OTHER THAN SMALL ENTITY	
RATE	ADDITIONAL FEE		RATE	ADDITIONAL FEE
X$ 9=		OR	X$18=	
X40=		OR	X80=	
+135=		OR	+270=	
TOTAL ADDIT. FEE		OR	TOTAL ADDIT. FEE	

AMENDMENT B	(Column 1) CLAIMS REMAINING AFTER AMENDMENT		(Column 2) HIGHEST NUMBER PREVIOUSLY PAID FOR	(Column 3) PRESENT EXTRA
Total	* 75	Minus	** 77	= —
Independent	* 8	Minus	*** 5	= 3
FIRST PRESENTATION OF MULTIPLE DEPENDENT CLAIM				☐

SMALL ENTITY		OR	OTHER THAN SMALL ENTITY	
RATE	ADDITIONAL FEE		RATE	ADDITIONAL FEE
X$ 9=		OR	X$18=	
X40=		OR	X80=	3000
+135=		OR	+270=	
TOTAL ADDIT. FEE		OR	TOTAL ADDIT. FEE	3000

pd 3-24-05

AMENDMENT C	(Column 1) CLAIMS REMAINING AFTER AMENDMENT		(Column 2) HIGHEST NUMBER PREVIOUSLY PAID FOR	(Column 3) PRESENT EXTRA
Total	*	Minus	**	=
Independent	*	Minus	***	=
FIRST PRESENTATION OF MULTIPLE DEPENDENT CLAIM				☐

SMALL ENTITY		OR	OTHER THAN SMALL ENTITY	
RATE	ADDITIONAL FEE		RATE	ADDITIONAL FEE
X$ 9=		OR	X$18=	
X40=		OR	X80=	
+135=		OR	+270=	
TOTAL ADDIT. FEE		OR	TOTAL ADDIT. FEE	

* If the entry in column 1 is less than the entry in column 2, write "0" in column 3.
** If the "Highest Number Previously Paid For" IN THIS SPACE is less than 20, enter "20."
*** If the "Highest Number Previously Paid For" IN THIS SPACE is less than 3, enter "3."
The "Highest Number Previously Paid For" (Total or Independent) is the highest number found in the appropriate box in column 1.

FORM PTO-875 (Rev. 8/00)

Patent and Trademark Office, U.S. DEPARTMENT OF COMMERCE

UNITED STATES PATENT AND TRADEMARK OFFICE

UNITED STATES DEPARTMENT OF COMMERCE
United States Patent and Trademark Office
Address: COMMISSIONER FOR PATENTS
P.O. Box 1450
Alexandria, Virginia 22313-1450
www.uspto.gov

APPLICATION NO.	FILING DATE	FIRST NAMED INVENTOR	ATTORNEY DOCKET NO.	CONFIRMATION NO.
09/775,018	02/01/2001	Eric G. Suder	16312-P005US	7490

7590 08/15/2005

Kelly K. Kordzik
Suite 800
100 Congress Avenue
Austin, TX 78701

EXAMINER	
NGUYEN, HANH N	

ART UNIT	PAPER NUMBER
2662	

DATE MAILED: 08/15/2005

Please find below and/or attached an Office communication concerning this application or proceeding.

SP

Office Action Summary	Application No.	Applicant(s)	
	09/775,018	SUDER ET AL.	
	Examiner	Art Unit	
	Hanh Nguyen	2662	

-- The MAILING DATE of this communication appears on the cover sheet with the correspondence address --

Period for Reply

A SHORTENED STATUTORY PERIOD FOR REPLY IS SET TO EXPIRE 3 MONTH(S) FROM THE MAILING DATE OF THIS COMMUNICATION.

- Extensions of time may be available under the provisions of 37 CFR 1.136(a). In no event, however, may a reply be timely filed after SIX (6) MONTHS from the mailing date of this communication.
- If the period for reply specified above is less than thirty (30) days, a reply within the statutory minimum of thirty (30) days will be considered timely.
- If NO period for reply is specified above, the maximum statutory period will apply and will expire SIX (6) MONTHS from the mailing date of this communication.
- Failure to reply within the set or extended period for reply will, by statute, cause the application to become ABANDONED (35 U.S.C. § 133). Any reply received by the Office later than three months after the mailing date of this communication, even if timely filed, may reduce any earned patent term adjustment. See 37 CFR 1.704(b).

Status

1)☒ Responsive to communication(s) filed on *24 March 2005*.

2a)☒ This action is **FINAL**. 2b)☐ This action is non-final.

3)☐ Since this application is in condition for allowance except for formal matters, prosecution as to the merits is closed in accordance with the practice under *Ex parte Quayle*, 1935 C.D. 11, 453 O.G. 213.

Disposition of Claims

4)☒ Claim(s) *1-6 and 8-77* is/are pending in the application.

4a) Of the above claim(s) _____ is/are withdrawn from consideration.

5)☒ Claim(s) *8-20,23-37,59-64 and 66* is/are allowed.

6)☒ Claim(s) *1-6,21,22,38-45,56-58,67-71 and 75-77* is/are rejected.

7)☒ Claim(s) *46-55 and 72-74* is/are objected to.

8)☐ Claim(s) _____ are subject to restriction and/or election requirement.

Application Papers

9)☐ The specification is objected to by the Examiner.

10)☐ The drawing(s) filed on _____ is/are: a)☐ accepted or b)☐ objected to by the Examiner.

Applicant may not request that any objection to the drawing(s) be held in abeyance. See 37 CFR 1.85(a).

Replacement drawing sheet(s) including the correction is required if the drawing(s) is objected to. See 37 CFR 1.121(d).

11)☐ The oath or declaration is objected to by the Examiner. Note the attached Office Action or form PTO-152.

Priority under 35 U.S.C. § 119

12)☐ Acknowledgment is made of a claim for foreign priority under 35 U.S.C. § 119(a)-(d) or (f).

a)☐ All b)☐ Some * c)☐ None of:

1.☐ Certified copies of the priority documents have been received.

2.☐ Certified copies of the priority documents have been received in Application No. _____.

3.☐ Copies of the certified copies of the priority documents have been received in this National Stage application from the International Bureau (PCT Rule 17.2(a)).

* See the attached detailed Office action for a list of the certified copies not received.

Attachment(s)

1) ☒ Notice of References Cited (PTO-892)
2) ☐ Notice of Draftsperson's Patent Drawing Review (PTO-948)
3) ☒ Information Disclosure Statement(s) (PTO-1449 or PTO/SB/08) Paper No(s)/Mail Date *2/1/01&4/9/01*.
4) ☐ Interview Summary (PTO-413) Paper No(s)/Mail Date. _____ .
5) ☐ Notice of Informal Patent Application (PTO-152)
6) ☐ Other: _____.

DETAILED ACTION.

Claim Rejections - 35 USC § 103

The following is a quotation of 35 U.S.C. 103(a) which forms the basis for all obviousness rejections set forth in this Office action:

> (a) A patent may not be obtained though the invention is not identically disclosed or described as set forth in section 102 of this title, if the differences between the subject matter sought to be patented and the prior art are such that the subject matter as a whole would have been obvious at the time the invention was made to a person having ordinary skill in the art to which said subject matter pertains. Patentability shall not be negatived by the manner in which the invention was made.

Claims 1, 2, 3, 5, 21, 22, 38, 39, 41, 43, 44, 45, 56, 67, 69, 71, 75, 76, 77 are rejected under 35 U.S.C. 103(a) as being unpatentable over Chen et al.(US Pat.5,751,791) in view of Verbeek (US Pat. 5,119,372).

Regards to claims 1, 22 and 67, Chen teaches a system comprising: a Hub (Fig.1a, 90), a multimedia server (Fig. 1a, 92), a telephony device coupled to the hub (Fig. 1a/102 or132, either LEC or PBX can be considered a telephony device), and a first network device coupled to the hub through the telephony device (Fig. 1a, 70a, 128). Chen discloses that the rate of data transmitted between terminal 70a (first network device) and LEC 102 (telephone) is 56 Kbps which is less than the rate transmitted after the LEC 102 (65 Kbps). However, Chen does not disclose the telephony device includes circuitry for throttling data sent from the first network device, wherein the throttling circuitry reduces a future amount of data from being transferred from the first network device if the amount of data exceeds a predetermined threshold.

Verbeek discloses, in fig.1, a network for transfering speech, computer data from computer TE 2-m to a multiplexer 1 (col.1, lines 35-45& col.5, lines 5-10). Fig. 2 discloses the multiplexer device (device 1) includes circuitry for throttling data (switching means 40 is a

blocking device, col.7, lines 30-35) sent from the first network device (restricting computer data sent from the TE 2-m via input line 4, see col.6, lines 20-35), wherein the throttling circuitry reduces a future amount of data from being transferred from the first network device if the amount of data exceeds a predetermined threshold (when buffer 32-1 is full indicated by a "buffer full" signal). Therefore, it would have been obvious to one ordinary skilled in the art to apply the blocking means 40 of Verbeek into the telephoen device of Chen in order to throttle data from being transferred from a computer terminal. The motivation is to prioritize voice transmission, increase rate transmission from the telephone and prevent data congestion.

Regarding claim 38, as ex plained in the rejection of claim 1, it is inherent that rate of voice transmission would increase when the data transmitted from the computer terminal is throttled.

Regarding claim 45, Chen does not disclose monitoring a predetermined level within a jitter buffer. Vebeek discloses, in fig.2, a buffer level is notified to a congest detector 34 by an indicator means 33 (monitoring a predetermined level in a jitter buffer). See col.5, lines 52-65.

Regarding claim 43, the limitation of this claim has been addressed in claim 1.

Claim 2 is rejected because Chen teaches a second network device connected to the hub, wherein data sent from the first network device is addressed for transmission to the second network device (Fig. 1a, 70c), the system in Fig. 1 is set up in such a way that enables device 70c to communicate with device 70a)

Claims 3, 5, 39, 41, 69 are rejected because all devices are all coupled together via an ISDN network, BRI, PRI.

Regarding claim 44, the limitation of this claim has been addressed in claim 1, 38.

Regarding claim 56, the limitation of this claim has been addressed in claim 1, 38.

Claim 21 is rejected because in Chen communication is realtime and the telephony device maintains the data rate at 56kbps.

Regarding claims 75 and 76, Chen discloses the telephone device 80 connects to network 88 via ISDN path 74. Therefore, the telecommunication network 88 is a circuit switch network or PSTN. A peripheral card adaptable for coupling to a telecommunications network is inherently coupled to the network 88.

Regarding claim 77, the limitation of this claim has been addressed in claim 1, 67.

Regarding claim 71, the limitation of this claim has been addressed in claim 1 and 67.

Claims 57-58 are rejected under 35 U.S.C. 103(a) as being unpatentable over Lee (US Pat. 6,876,648 B1) in view of Verbeek (Pat. 5,119,372).

With regards to claim 57, Lee teaches an IP telephony device (Fig. 3) comprising: an input data port for receiving data (Fig. 3, input/output 14), wherein the data is addressed for transmission to a location other than the IP telephony device (Fig. 3, I/O 14 transmits data externally via hand set 10, col.4, lines 52-60); a speaker (speaker phone 12, fig.3); a microphone (a headset, fig.3); circuitry for communicating information to and from the IP telephony device (Fig.3, combination of mux 16, handset 10 and speakerphone 12); a circuitry for communicating audio information between speaker and the microphone (fig.3, mux 16). Lee does not disclose a circuitry for suffciently throttling the data so that the communication of the information can be performed real-time. Verbeek discloses in Fig. 2 a circuitry for throttling data (switching means 40 is a blocking device, col.7, lines 30-35) sent from the first network device (restricting computer data sent from the TE 2-m via input line 4, see col.6, lines 20-35), wherein the

throttling circuitry reduces a future amount of data from being transferred from the first network device if the amount of data exceeds a predetermined threshold (when buffer 32-1 is full indicated by a "buffer full" signal). Therefore, it would have been obvious to one ordinary skilled in the art to apply the blocking means 40 of Verbeek into the telephone device of Chen in order to throttle data from being transferred from a computer terminal. The motivation is to prioritize voice transmission, increase rate transmission from the telephone and prevent data congestion.

Claim 58 is rejected because the IP telephony device communicates using TCP/IP protocol (see fig.1).

Claims 4, 6, 40, 42, 68, 70 are rejected under 35 U.S.C. 103(a) as being unpatentable over Chen et al. in view of Hung et al.(US pat. 6,760,429).

With regards to claims 4, 6, 40, 42, 68, 70, Chen fails to teach a TCP/IP network or the multimedia server and the telephony device communicating using IP protocol. The network in Chen is a packet network. However, it is not TCP/IP. Hung et al teaches an IP network with a telephony device and a multimedia sever communicating using TCP/IP protocol. It would have been obvious to one of ordinary skilled in the art to combine Chen with Hung for the purpose of sending multimedia messages over an IP network. The motivation being the use of a connection oriented network for multimedia communications.

Allowable Subject Matter

Claims 8-20, 23-37 and 59-64, 66 are allowed.

Claims 46-55 and 72-74 are objected to as being dependent upon a rejected base claim, but would be allowable if rewritten in independent form including all of the limitations of the base claim and any intervening claims.

The following is a statement of reasons for the indication of allowable subject matter:

Claim 46, the prior art fails to disclose the step of sending a congestion message from the telephone to the multimedia server when the audio information falls below the predetermined level.

Claim 72, the prior art does not disclose the sending circuitry will designate the mode level at a most aggressive mode as long as the congestion message is received within a specific time period.

Response to Arguments

Applicant's arguments with respect to claims 1-6, 21, 22, 38-45, 56-58, 67-71 and 75-77 have been considered but are moot in view of the new ground(s) of rejection.

Conclusion

The prior art made of record and not relied upon is considered pertinent to applicant's disclosure..

Kim et al. (pat. 6678280 B1) discloses Voice packet transmission controll method in gateway system and device thereof.

Nakajima (Pat. 6839341 B1) discloses Device capable of Accommodating existing voice terminals.

Applicant's amendment necessitated the new ground(s) of rejection presented in this Office action. Accordingly, **THIS ACTION IS MADE FINAL**. See MPEP § 706.07(a). Applicant is reminded of the extension of time policy as set forth in 37 CFR 1.136(a).

A shortened statutory period for reply to this final action is set to expire THREE MONTHS from the mailing date of this action. In the event a first reply is filed within TWO MONTHS of the mailing date of this final action and the advisory action is not mailed until after the end of the THREE-MONTH shortened statutory period, then the shortened statutory period will expire on the date the advisory action is mailed, and any extension fee pursuant to 37 CFR 1.136(a) will be calculated from the mailing date of the advisory action. In no event, however, will the statutory period for reply expire later than SIX MONTHS from the date of this final action.

Any inquiry concerning this communication or earlier communications from the examiner should be directed to Hanh Nguyen whose telephone number is 571 272 3092. The examiner can normally be reached on Monday-Friday from 8AM to 5PM. The examiner can also be reached on alternate

If attempts to reach the examiner by telephone are unsuccessful, the examiner's supervisor, Hassan Kizou, can be reached on 5712723088. The fax phone number for the organization where this application or proceeding is assigned is 5712738300.

Information regarding the status of an application may be obtained from the Patent Application Information Retrieval (PAIR) system. Status information for published applications may be obtained from either Private PAIR or Public PAIR. Status information for unpublished applications is available through Private PAIR only. For more information about the PAIR

system, see http://pair-direct.uspto.gov. Should you have questions on access to the Private PAIR system, contact the Electronic Business Center (EBC) at 866-217-9197 (toll-free).

HANH NGUYEN
PRIMARY EXAMINER

In Place of FORM PTO-1449 (Modified)

LIST OF PATENTS AND PUBLICATIONS FOR APPLICANT'S INFORMATION DISCLOSURE STATEMENT

Serial No.: 09/775018
Applicant: Eric C. Suder et al.
Filing Date: (herewith)
Group: 2662
Atty. Docket No.: 16312-P005US

31033 U.S. PTO
09/775018
02/01/01

Best Available Copy

Reference Designation

U.S. PATENT DOCUMENTS

Examiner Initial	Document Number	Date	Name	Class	Subclass	Filing Date if Appropriate
AAA						
ABA						
ACA						
ADA						
AEA						
AFA						
AGA						
AHA						
AIA						
AJA						
AKA						

FOREIGN PATENT DOCUMENTS

Examiner Initial	Document Number	Date	Country	Class	Subclass	Translation Yes	Translation No
ALA							
AMA							
ANA							
AOA							
APA							

OTHER ART (Including Author, Title, Date, Pertinent Pages, Etc.)

Examiner Initial

HN ARA Harry Newton, *Newton's Telecom Dictionary*, 16th Edition, copyright 2000, pp. 126-127.

_____ ASA

_____ ATA

Examiner: HNguyen Date Considered: 8/9/05

EXAMINER: Initial if reference considered, whether or not citation is in conformance with MPEP 609; Draw line through citation if not in conformance and not considered. Include copy of this form with next communication to applicant.

::ODMA\PCDOCS\AUSTIN_1\157652\1
207:16312-P005US

Received 4/9/07

In Place of FORM PTO-1449 (Modified)

LIST OF PATENTS AND PUBLICATIONS FOR APPLICANT'S INFORMATION DISCLOSURE STATEMENT

Serial No.: 09/775,018
Applicant: Eric G. Suder et al
Filing Date: February 1, 2001
Group: ~~2661~~ 2662
Atty Docket No.: 16312-P005US

Reference Designation

U.S. PATENT DOCUMENTS

Examiner Initial	Document Number	Date	Name	Class	Subclass	Filing Date if Appropriate
HN AAA	5,982,779	11/09/99	Krishnakumar et al.	370	447	
ABA						
ACA						
ADA						
AEA						
AFA						
AGA						
AHA						
AIA						
AJA						
AKA						

FOREIGN PATENT DOCUMENTS

Examiner Initial	Document Number	Date	Country	Class	Subclass	Translation Yes	Translation No
ALA							
AMA							
ANA							
AOA							
APA							

OTHER ART (Including Author, Title, Date, Pertinent Pages, Etc.)

Examiner Initial

HN ARA *Avaya Communication*, "Avaya IP Telephone," available via the Internet at www.lucent.com/enterprise/solutions/eclips/pdf/black_white_paper.pdf, November 9, 2000

HN ASA *Avaya Communication*, "Quality of Service (QoS) considerations with 4600 Series IP Telephones," available via the Internet at www.lucent.com/enterprise/solutions/eclips/pdf/QoSwhite_paper.pdf, January 29, 2000.

ATA

Examiner HN Date Considered 8/8/05

EXAMINER: Initial if reference considered, whether or not citation is in conformance with MPEP 609; Draw line through citation if not in conformance and not considered. Include copy of this form with next communication to applicant.

PAGE 2/3 * RCVD AT 8/8/2005 2:37:28 PM [Eastern Daylight Time] * SVR:USPTO-EFXRF-6/25 * DNIS:2733092 * CSID:+ * DURATION (mm-ss):01-26

Notice of References Cited	Application/Control No. 09/775,018	Applicant(s)/Patent Under Reexamination SUDER ET AL.	
	Examiner Hanh Nguyen	Art Unit 2662	Page 1 of 1

U.S. PATENT DOCUMENTS

*		Document Number Country Code-Number-Kind Code	Date MM-YYYY	Name	Classification
	A	US-6,678,280 B1	01-2004	Kim et al.	370/429
	B	US-6,839,341 B1	01-2005	Nakajima, Yasunori	370/352
	C	US-6,876,648 B1	04-2005	Lee, Dae-Jin	370/353
	D	US-5,751,791	05-1998	Chen et al.	379/88.13
	E	US-5,119,372 A	06-1992	Verbeek, Robert J. M.	370/230
	F	US-			
	G	US-			
	H	US-			
	I	US-			
	J	US-			
	K	US-			
	L	US-			
	M	US-			

FOREIGN PATENT DOCUMENTS

*		Document Number Country Code-Number-Kind Code	Date MM-YYYY	Country	Name	Classification
	N					
	O					
	P					
	Q					
	R					
	S					
	T					

NON-PATENT DOCUMENTS

*		Include as applicable: Author, Title Date, Publisher, Edition or Volume, Pertinent Pages)
	U	
	V	
	W	
	X	

*A copy of this reference is not being furnished with this Office action. (See MPEP § 707.05(a).)
Dates in MM-YYYY format are publication dates. Classifications may be US or foreign.

Index of Claims

Application/Control No.	Applicant(s)/Patent under Reexamination
09/775,018	SUDER ET AL.
Examiner	**Art Unit**
Hanh Nguyen	2662

√	Rejected	–	(Through numeral) Cancelled	N	Non-Elected	A	Appeal
=	Allowed	+	Restricted	I	Interference	O	Objected

Claim		Date								
Final	Original	8/9/05								
	1	√								
	2	√								
	3	√								
	4	√								
	5	√								
	6	√								
	7	–								
	8	=								
	9	(								
	10	(								
	11	(								
	12	(								
	13	(								
	14	(								
	15	(								
	16	(								
	17	(								
	18	√								
	19	√								
	20	=								
	21	=								
	22	√								
	23	=								
	24	(								
	25	(								
	26	(								
	27	(								
	28	(								
	29	(								
	30	(								
	31	(								
	32	(								
	33	(								
	34	(								
	35	(								
	36	√								
	37	=								
	38	√								
	39	√								
	40	√								
	41	√								
	42	√								
	43	√								
	44	√								
	45	√								
	46	O								
	47	O								
	48	O								
	49	O								
	50	O								

Claim		Date								
Final	Original	8/9/05								
	51	O								
	52	O								
	53	O								
	54	O								
	55	O								
	56	√								
	57	√								
	58	√								
	59	=								
	60	(								
	61	(								
	62	(								
	63	√								
	64	=								
	65	–								
	66	=								
	67	√								
	68	√								
	69	√								
	70	√								
	71	√								
	72	O								
	73	O								
	74	O								
	75	O								
	76	√								
	77	√								
	78									
	79									
	80									
	81									
	82									
	83									
	84									
	85									
	86									
	87									
	88									
	89									
	90									
	91									
	92									
	93									
	94									
	95									
	96									
	97									
	98									
	99									
	100									

Claim		Date								
Final	Original									
	101									
	102									
	103									
	104									
	105									
	106									
	107									
	108									
	109									
	110									
	111									
	112									
	113									
	114									
	115									
	116									
	117									
	118									
	119									
	120									
	121									
	122									
	123									
	124									
	125									
	126									
	127									
	128									
	129									
	130									
	131									
	132									
	133									
	134									
	135									
	136									
	137									
	138									
	139									
	140									
	141									
	142									
	143									
	144									
	145									
	146									
	147									
	148									
	149									
	150									

Search Notes

Application/Control No.	Applicant(s)/Patent under Reexamination	
09/775,018	SUDER ET AL.	
Examiner	**Art Unit**	
Hanh Nguyen	2662	

SEARCHED			
Class	Subclass	Date	Examiner
370	352	8/9/2005	HN
	389		
	401		
	493		
	494		
	495		
	535		
	395.42		
	395.21		
	433		
	443		
	444		
	445		

INTERFERENCE SEARCHED			
Class	Subclass	Date	Examiner

SEARCH NOTES (INCLUDING SEARCH STRATEGY)		
	DATE	EXMR
East	8/9/2005	HN

OIPE
SEP 19 2005
IAP57
PATENT & TRADEMARK OFFICE

2661
AF/ITR

PTO/SB/21 (09-04)
Approved for use through 07/31/2006. OMB 0651-0031
U.S. Patent and Trademark Office; U.S. DEPARTMENT OF COMMERCE
Under the Paperwork Reduction Act of 1995, no persons are required to respond to a collection of information unless it displays a valid OMB control number.

TRANSMITTAL FORM

(to be used for all correspondence after initial filing)

Total Number of Pages in This Submission

Application Number	09/775,018
Filing Date	02/01/2001
First Named Inventor	Eric G. Suder
Art Unit	2661
Examiner Name	Hanh Nguyen
Attorney Docket Number	16312-P005US

ENCLOSURES *(Check all that apply)*

- ☐ Fee Transmittal Form
  - ☐ Fee Attached
- ☑ Amendment/Reply
  - ☐ After Final
  - ☐ Affidavits/declaration(s)
- ☐ Extension of Time Request
- ☐ Express Abandonment Request
- ☐ Information Disclosure Statement
- ☐ Certified Copy of Priority Document(s)
- ☐ Reply to Missing Parts/ Incomplete Application
  - ☐ Reply to Missing Parts under 37 CFR 1.52 or 1.53
- ☐ Drawing(s)
- ☐ Licensing-related Papers
- ☐ Petition
- ☐ Petition to Convert to a Provisional Application
- ☐ Power of Attorney, Revocation Change of Correspondence Address
- ☐ Terminal Disclaimer
- ☐ Request for Refund
- ☐ CD, Number of CD(s) _____
  - ☐ Landscape Table on CD
- ☐ After Allowance Communication to TC
- ☐ Appeal Communication to Board of Appeals and Interferences
- ☐ Appeal Communication to TC **(Appeal Notice, Brief, Reply Brief)**
- ☐ Proprietary Information
- ☐ Status Letter
- ☑ Other Enclosure(s) (please Identify below):
  Return Postcard

Remarks

SIGNATURE OF APPLICANT, ATTORNEY, OR AGENT

Firm Name	Winstead Sechrest & Minick P.C.		
Signature			
Printed name	Kelly K. Kordzik		
Date	09/16/2005	Reg. No.	36,571

CERTIFICATE OF TRANSMISSION/MAILING

I hereby certify that this correspondence is being facsimile transmitted to the USPTO or deposited with the United States Postal Service with sufficient postage as first class mail in an envelope addressed to: Commissioner for Patents, P.O. Box 1450, Alexandria, VA 22313-1450 on the date shown below:

Signature	Toni Stanley		
Typed or printed name	Toni Stanley	Date	09/16/2005

This collection of information is required by 37 CFR 1.5. The information is required to obtain or retain a benefit by the public which is to file (and by the USPTO to process) an application. Confidentiality is governed by 35 U.S.C. 122 and 37 CFR 1.11 and1.14. This collection is estimated to 2 hours to complete, including gathering, preparing, and submitting the completed application form to the USPTO. Time will vary depending upon the individual case. Any comments on the amount of time you require to complete this form and/or suggestions for reducing this burden, should be sent to the Chief Information Officer, U.S. Patent and Trademark Office, U.S. Department of Commerce, P.O. Box 1450, Alexandria, VA 22313-1450. DO NOT SEND FEES OR COMPLETED FORMS TO THIS ADDRESS. **SEND TO: Commissioner for Patents, P.O. Box 1450, Alexandria, VA 22313-1450.**

If you need assistance in completing the form, call 1-800-PTO-9199 and select option 2.

IN THE UNITED STATES PATENT AND TRADEMARK OFFICE

In re Application:	Suder et al.
Serial No.:	09/775,018
Filed:	February 1, 2001
Art Unit:	2661
Examiner:	Hanh Nguyen
For:	QUALITY OF SERVICE IN A VOICE OVER IP TELEPHONE SYSTEM

THIRD AMENDMENT UNDER 37 C.F.R. § 1.111

Mail Stop Amendment
Commissioner for Patents
P.O. Box 1450
Alexandria, VA 22313-1450

Dear Sir:

In response to the Office Action having a mailing date of August 15, 2005, with a three-month shortened statutory period for response set to expire on November 15, 2005, please amend the above-identified Application as follows:

CERTIFICATION UNDER 37 C.F.R. § 1.8

I hereby certify that this correspondence is being deposited with the United States Postal Service with sufficient postage as first class mail in an envelope addressed to Mail Stop Amendment, Commissioner for Patents, P.O. Box 1450, Alexandria, VA 22313-1450, on 9-16, 2005.

Signature

Toni Stanley
(Printed name of person certifying)

IN THE CLAIMS

Please rewrite the claims as follows:

1. (cancelled)

2. (cancelled)

3. (cancelled)

4. (cancelled)

5. (cancelled)

6. (cancelled)

7. (cancelled)

8. (previously presented) An information handling system comprising:

a hub;

a multimedia server coupled to the hub;

a telephony device coupled to the hub; and

a first network device coupled to the hub through the telephony device, wherein the telephony device includes circuitry for throttling data sent from the first network device, wherein the telephony device includes circuitry for monitoring an amount of data addressed to and received by the telephony device, wherein the throttling circuitry reduces a future amount of data from being transferred from the first network device if the amount of data addressed to and received by the telephony device falls below a predetermined threshold.

9. (original) The system as recited in claim 8, wherein the monitoring circuitry comprises a jitter buffer where the predetermined threshold is a predetermined level within the jitter buffer.

10. (original) The system as recited in claim 8, wherein the monitoring circuitry further comprises circuitry for sending a congestion message to the multimedia server when the amount of data addressed to and received by the telephony device falls below the predetermined threshold.

11. (original) The system as recited in claim 10, wherein the multimedia server further comprises circuitry for sending a throttling signal to the telephony device in response to receipt of the congestion message from the monitoring circuitry.

12. (original) The system as recited in claim 11, wherein the throttling circuitry in the telephony device throttles the future amount of data sent from the first network device in response to receipt of the throttling signal.

13. (original) The system as recited in claim 12, wherein the throttling signal includes a mode level in which the throttling circuitry should operate.

14. (original) The system as recited in claim 13, wherein the throttling circuitry adjusts its level of throttling of the data in response to the mode level included in the throttling signal.

15. (original) The system as recited in claim 14, wherein the mode level is a most aggressive mode, wherein the throttling circuitry will throttle the future amount of data sent from the first network device at a highest level in response to the mode level being in the most aggressive mode.

16. (original) The system as recited in claim 15, wherein the sending circuitry in the multimedia server will designate the mode level at the most aggressive mode as long as the congestion message is received from any telephony device coupled to the multimedia server within a specified time period.

17. (original) The system as recited in claim 16, wherein the throttling signal will switch to a least aggressive mode if the congestion message is not received from any telephony device coupled to the multimedia server within the specified time period.

18. (original) The system as recited in claim 17, wherein the throttling circuitry will throttle the future amount of data sent from the first network device at a level lower than the highest level in response to the mode level being in the least aggressive mode.

19. (original) The system as recited in claim 18, wherein the throttling signal will contain a signal to stop the throttling of the future amount of data if the congestion message is not received from any telephony device coupled to the multimedia server within the specified time period while the mode level has been in the least aggressive mode.

20. (original) The system as recited in claim 19, further comprising another telephony device coupled between the hub and a second network device, wherein the telephony device also includes throttling circuitry for throttling a future amount of data sent from the second network device in response to receipt of the throttling signal.

21. (cancelled)

22. (cancelled)

23. (original) An information handling system comprising:

a TCP/IP network;

a hub;

a multimedia server coupled to the hub via the TCP/IP network;

a first IP telephony device coupled to the hub via the TCP/IP network;

a first network device coupled to the first IP telephony device;

a second network device coupled to the hub via the TCP/IP network, wherein data sent from the first network device is addressed for transmission to the second network device and is transmitted through the first IP telephony device to the TCP/IP network, wherein the first IP telephony device

includes first circuitry for monitoring if an amount of multimedia data being addressed to the IP telephony device and received over the TCP/IP network falls below a first predetermined threshold, wherein the first IP telephony device includes first circuitry for throttling the data sent from the first network device in response to the first monitoring circuitry determining that the amount of multimedia data being received by the first IP telephony device over the TCP/IP network falls below the first predetermined threshold.

24. (original) The system as recited in claim 23, further comprising:

a second IP telephony device coupled to the hub via the TCP/IP network; and

a third network device coupled to the second IP telephony device, wherein data sent from the third network device is addressed for transmission to the second network device and is transmitted through the second IP telephony device to the TCP/IP network,

wherein the second IP telephony device includes second circuitry for throttling the data sent from the third network device in response to the first monitoring circuitry determining that the amount of multimedia data being received by the first IP telephony device over the TCP/IP network falls below the first predetermined threshold.

25. (original) The system as recited in claim 24, wherein the first monitoring circuitry further comprises first circuitry for sending a first congestion message to the multimedia server over the TCP/IP network when the amount of multimedia data being received by the first IP telephony device over the TCP/IP network falls below the first predetermined threshold.

26. (original) The system as recited in claim 25, wherein the multimedia server further comprises circuitry for sending a throttling signal to the first and second IP telephony devices

over the TCP/IP network in response to receipt of the first congestion message from the first monitoring circuitry.

27. (original) The system as recited in claim 26, wherein the first throttling circuitry in the first IP telephony device throttles the data sent from the first network device in response to receipt of the throttling signal, wherein the second throttling circuitry in the second IP telephony device throttles the data sent from the third network device in response to receipt of the throttling signal.

28. (original) The system as recited in claim 27, wherein the throttling signal includes a mode level in which the first and second throttling circuitries should operate.

29. (original) The system as recited in claim 28, wherein the first throttling circuitry adjusts its level of throttling of the data in response to the mode level included in the throttling signal, wherein the second throttling circuitry adjusts its level of throttling of the data in response to the mode level included in the throttling signal.

30. (original) The system as recited in claim 29, wherein the mode level is a most aggressive mode, wherein the first throttling circuitry will throttle the data sent from the first network device at a highest level in response to the mode level being in the most aggressive mode, wherein the second throttling circuitry will throttle the data sent from the third network device at a highest level in response to the mode level being in the most aggressive mode.

31. (original) The system as recited in claim 30, wherein the second IP telephony device includes second circuitry for monitoring if a second amount of multimedia data being received by the second IP telephony device over the TCP/IP network falls below a second predetermined threshold, wherein the second monitoring circuitry further comprises second circuitry for sending a second congestion message to the multimedia server over the TCP/IP network when the second amount of multimedia data being received by the second IP telephony device over the TCP/IP network falls below the second predetermined threshold.

32. (original) The system as recited in claim 31, wherein the sending circuitry in the multimedia server will designate the mode level at the most aggressive mode as long as the first or second congestion messages are received within a specified time period.

33. (original) The system as recited in claim 31, wherein the throttling signal will switch to a least aggressive mode if the congestion message is not received from any IP telephony device coupled to the multimedia server within the specified time period.

34. (original) The system as recited in claim 32, wherein the throttling circuitry will throttle the data sent from the second network device at a level lower than the highest level in response to the mode level being in the least aggressive mode.

35. (original) The system as recited in claim 33, wherein the throttling signal will contain a signal to stop the throttling of the data if the congestion message is not received from any IP telephony device coupled to the multimedia server within the specified time period while the mode level has been in the least aggressive mode.

36. (original) The system as recited in claim 34, wherein the multimedia data includes real-time audio information.

37. (original) The system as recited in claim 23, wherein the data sent from the first network device is sufficiently throttled so that the first IP telephony device can communicate real-time signals to and from the multimedia server over the TCP/IP network.

38. (original) In an information handling system comprising a hub, a multimedia server ("multimedia server") coupled to the hub, a telephone coupled to the hub, a workstation coupled to the hub through the telephone, and a data server coupled to the hub, a method comprising the steps of:

transferring data from the workstation to the telephone, wherein the data sent from the workstation is addressed for transmission to the data server;

communicating audio information between the telephone and the multimedia server; and

sufficiently throttling the data sent from the workstation to the telephone to increase a rate of transfer of the audio information during the communicating step.

39. (original) The method as recited in claim 38, wherein the hub, multimedia server, data server, telephone, and workstation are coupled to each other via a network.

40. (original) The method as recited in claim 39, wherein the network is a TCP/IP network.

41. (original) The method as recited in claim 39, wherein the network is a packet switched network.

42. (original) The method as recited in claim 39, wherein the telephone and multimedia server communicate using an IP protocol.

43. (original) The method as recited in claim 38, wherein the throttling step further comprises the step of reducing a future amount of data from being transferred from the workstation if the amount of data exceeds a predetermined threshold.

44. (original) The method as recited in claim 38, wherein the throttling step further comprises the step of monitoring an amount of the audio information being received by the telephone from the multimedia server.

45. (original) The method as recited in claim 44, wherein the monitoring step further comprises the step of monitoring a predetermined level within a jitter buffer.

46. (currently amended) ~~The method as recited in claim 44~~, In an information handling system comprising a hub, a multimedia server ("multimedia server") coupled to the hub, a telephone coupled to the hub, a workstation coupled to the hub through the telephone, and a data server coupled to the hub, a method comprising the steps of:

transferring data from the workstation to the telephone, wherein the data sent from the workstation is addressed for transmission to the data server;

communicating audio information between the telephone and the multimedia server; and

sufficiently throttling the data sent from the workstation to the telephone to increase a rate of transfer of the audio information during the communicating step, wherein the throttling step further comprises the step of monitoring an amount of the audio information being received by the telephone from the multimedia server, wherein the monitoring step further comprises the step of the telephone sending a congestion message to the multimedia server when the amount of the audio information falls below the predetermined level.

47. (original) The method as recited in claim 46, further comprising the step of the multimedia server sending a throttling signal to the telephone in response to receipt of the congestion message.

48. (original) The method as recited in claim 47, wherein the throttling step operates in response to receipt of the throttling signal.

49. (original) The method as recited in claim 48, wherein the throttling signal includes a mode level.

50. (original) The method as recited in claim 49, wherein the throttling step further comprises the step of adjusting a level of throttling of the data in response to the mode level included in the throttling signal.

51. (original) The method as recited in claim 50, wherein the step of the multimedia server sending a throttling signal to the telephone in response to receipt of the congestion message further comprises the step of setting the mode level to a most aggressive mode, wherein the

throttling step will throttle the future amount of data sent from the workstation at a highest level in response to the mode level being in the most aggressive mode.

52. (original) The method as recited in claim 51, wherein the setting step will designate the mode level at the most aggressive mode as long as the congestion message is received from any telephone coupled to the multimedia server within a specified time period.

53. (original) The method as recited in claim 52, wherein the step of the multimedia server sending a throttling signal to the telephone in response to receipt of the congestion message further comprises the step of setting the mode level to a least aggressive mode if the congestion message is not received from any telephone coupled to the multimedia server within the specified time period.

54. (original) The method as recited in claim 53, wherein the throttling step will throttle the future amount of data sent from the workstation at a level lower than the highest level in response to the mode level being in the least aggressive mode.

55. (original) The method as recited in claim 54, wherein the step of the multimedia server sending a throttling signal to the telephone in response to receipt of the congestion message further comprises the step of sending a message to stop the throttling of the future amount of data if the congestion message is not received from any telephone coupled to the multimedia server within the specified time period while the mode level has been in the least aggressive mode.

56. (original) The method as recited in claim 38, wherein the throttling results in no data being sent from the workstation to the telephone.

57. (previously presented) An IP telephony device comprising:

an input data port for receiving data, wherein the data is addressed for transmission to a location other than the IP telephony device;

circuitry for communicating information to and from the IP telephony device;

circuitry for sufficiently throttling the data so that the communication of the information can be performed in real-time;

a microphone;

a speaker; and

circuitry for communicating the audio information to the speaker and from the microphone.

58. (original) The IP telephony device as recited in claim 57, wherein the IP telephony device communicates the information using an IP protocol.

59. (previously presented) An IP telephony device comprising:

an input data port for receiving data, wherein the data is addressed for transmission to a location other than the IP telephony device;

circuitry for communicating information to and from the IP telephony device;

circuitry for sufficiently throttling the data so that the communication of the information can be performed in real-time, wherein the IP telephony device communicates the information using an IP protocol, wherein the throttling circuitry further comprises circuitry for sending a congestion

message from a data output port when the amount of the information being received by the IP telephony device falls below a predetermined level.

60. (original) The IP telephony device as recited in claim 59, wherein the throttling circuitry throttles the future amount of data received at the input data port in response to receipt of a throttling signal at the input data port, wherein the throttling signal is a function of the congestion message.

61. (original) The IP telephony device as recited in claim 60, wherein the throttling signal includes a mode level in which the throttling circuitry should operate.

62. (original) The IP telephony device as recited in claim 61, wherein the throttling circuitry adjusts its level of throttling of the data in response to the mode level included in the throttling signal.

63. (original) The IP telephony device as recited in claim 62, wherein when the mode level is a most aggressive mode, the throttling circuitry will throttle the future amount of data at a highest level in response to the mode level being in the most aggressive mode.

64. (original) The IP telephony device as recited in claim 63, wherein the throttling circuitry will throttle the future amount of data sent from the workstation at a level lower than the highest level in response to the mode level being in a least aggressive mode.

65. (cancelled)

66. (original) The IP telephony device as recited in claim 60, further comprising:

a microphone;

a speaker; and

circuitry for communicating the audio information to the speaker and from the microphone.

67. (currently amended) A multimedia server comprising:

a network connection for connecting the multimedia server to a data network, wherein the network is a TCP/IP network;

circuitry operable for communicating audio information with a telephone connected to the data network;

circuitry operable for sending a throttling signal onto the data network in response to receipt of a congestion message from the data network, wherein the throttling signal includes a mode level, wherein the sending circuitry will designate the mode level at a most aggressive mode as long as the congestion message is received within a specified time period.

68. (cancelled)

69. (original) The multimedia server as recited in claim 67, wherein the network is a packet switched network.

70. (original) The multimedia server as recited in claim 67, wherein the communicating circuitry further comprises circuitry operable for communicating the audio information using an IP protocol.

71. (cancelled)

72. (cancelled)

73. (currently amended) The multimedia server as recited in claim 67~~-72~~, wherein the throttling signal will switch to a least aggressive mode if the congestion message is not received within the specified time period.

74. (original) The multimedia server as recited in claim 73, wherein the throttling signal will contain a stop data throttling signal if the congestion message is not received within the specified time period while the mode level has been in the least aggressive mode.

75. (original) The multimedia server as recited in claim 67, further comprising:

a peripheral card adaptable for coupling to a telecommunications network.

76. (original) The multimedia server as recited in claim 75, wherein the telecommunications network is a public switched telephone network.

77. (original) The multimedia server as recited in claim 75, further comprising:

switching circuitry for communicating the audio information between the network connection and the peripheral card.

REMARKS

Claims 1-6 and 8-77 are pending in the Application.

Claims 8-20, 23-37, 59-64 and 66 have been allowed.

Claims 1-6, 21, 22, 38-43, 56-58, 67-71 and 75-77 stand rejected.

Claims 46-55 and 72-74 are objected to.

The finality of this Office Action is premature. In response to the Office Action dated December 27, 2004, Applicants amended claim 1 to incorporate the limitations of claim 7, which had been indicated by the Examiner as being allowable if rewritten in independent form including all the limitations of the base claim and any intervening claims. Thus, the limitations of claim 7 were moved up into claim 1, with the result being that claim 1 is essentially claim 7 rewritten in independent form.

In the present Office Action, the Examiner has now rejected claim 1 as being unpatentable over *Chen* and *Verbeek*. This is a new rejection not necessitated by an amendment to the claims. Thus, there is a claim (new claim 1) that has a new rejection but which previously was not rejected. Therefore, the Examiner must remove the finality of this Office Action as set forth in MPEP § 706.07(a).

Claims 1-3, 5, 21-22, 38-39, 41, 43-45, 56, 67, 69, 71 and 75-77 stand rejected under 35 U.S.C. § 103(a) as being unpatentable over *Chen et al.* (U.S. Patent No. 5,751,791) in view of *Verbeek* (U.S. Patent No. 5,119,372). Claims 1-3, 5, 21-22 have been cancelled. Claim 67 has been amended to incorporate the limitations of claims 68, 71 and 72. Applicants traverse the rejections of claims 38, 39, 41, 43-45 and 56.

Claim 38 specifically recites the step of sufficiently throttling the data sent from the workstation to the telephone to increase a rate of transfer of the audio information during the communicating step. The Examiner has asserted on page 3 of the Office Action that it is inherent

that the rate of voice transmission would increase when the data transmitted from the computer terminal is throttled. To the contrary, it is actually suggested in *Verbeek* that the audio information be throttled and not the data sent from the workstation. *Verbeek* specifically states that it may be permitted that one or a plurality of data cells of a telephone conversation are lost and that this reduces only the understandability, but the conversation need not become impossible provided that the number of lost data cells does not become large. Col. 1, lines 46-53. Therefore, the most that *Verbeek* teaches or suggests is that if there would be any throttling, it would be of the rate of transfer of the audio information and not throttling of other types of data. Therefore, the Examiner is incorrect in stating on page 3 of the Office Action that the "motivation is to prioritize voice transmission." Actually, the motivation in *Verbeek* is to prioritize data transmissions other than voice. As a result, a combination of *Verbeek* and *Chen* would teach and suggest to one of ordinary skill in the art at the time the invention was made to sufficiently throttle the audio information in order to increase a rate of transfer of data sent from the workstation to the telephone. This is opposite of what is specifically recited within claim 38. As a result, the combination of *Verbeek* and *Chen* does not make obvious claim 38 and its dependent claims.

More specifically with respect to claim 56, which recites that the throttling results in no data being sent from the workstation to the telephone, the combination of *Chen* and *Verbeek* would clearly teach away from such a claim limitation, because this would be the opposite of the intent of the *Verbeek* disclosure.

Claims 57-58 stand rejected under 35 U.S.C. § 103(a) as being unpatentable over *Lee* (U.S. Patent No. 6,876,648) in view of *Verbeek*. In response, Applicants respectfully traverse this rejection.

The Examiner admits that *Lee* does not disclose the throttling aspects of the claimed invention. The Examiner therefore turns to *Verbeek* for such teachings and suggestions. However, *Verbeek* merely discloses a multiplexer circuit for performing the congestion measurements and throttling, and does not in any way teach or suggest that the concepts and teachings in *Verbeek* may

be used in an IP telephony device, which is specifically recited within the claims. Further, *Lee* has absolutely no teaching or suggestion within it that throttling is needed in the IP telephony device disclosed in *Lee*. Therefore, there is no suggestion to combine *Lee* and *Verbeek*. In fact, the Examiner has not even provided a stated motivation as to why *Lee* and *Verbeek* can be combined to reject claims 57 and 58. Instead, the Examiner has merely parroted the motivation language from page 3 of the Office Action for combining *Verbeek* and *Chen*. Specifically, on page 5 of the Office Action, the Examiner's stated motivation for combining *Lee* and *Verbeek* is as follows:

> Therefore, it would have been obvious to one ordinary skilled in the art to apply the blocking means 40 of *Verbeek* into the telephone device in *Chen* in order to throttle data from being transferred from a computer terminal. The motivation is to prioritize voice transmission, increase rate transmission from the telephone and prevent data congestion.

As can be readily seen in this language, *Lee* is not utilized or mentioned. Therefore, the Examiner has failed to prove a *prima facie* case of obviousness in rejecting claims 57-58 in view of *Lee* and *Verbeek* because the Examiner has not provided objective evidence as to why *Lee* and *Verbeek* may be combined. Moreover, Applicants have shown above that one skilled in the art at the time the invention was made would not have combined *Lee* and *Verbeek* in order to arrive at the claimed invention.

In conclusion, as a result of the foregoing, Applicants respectfully assert that all of the claims in the application are now in condition for allowance.

Respectfully submitted,

WINSTEAD SECHREST & MINICK P.C.

Attorneys for Applicant

By: _____
Kelly K. Kordzik
Reg. No. 36,571

P.O. Box 50784
Dallas, Texas 75201
(512) 370-2851

Austin_1\290638\1
16312-P005US 9/9/2005

OIPE, IAP57
SEP 19 2005
PATENT & TRADEMARK OFFICE

PTO/SB/122 (09-03)
Approved for use through 11/30/2005. OMB 0651-0035
U.S. Patent and Trademark Office; U.S. DEPARTMENT OF COMMERCE
Under the Paperwork Reduction Act of 1995, no persons are required to respond to a collection of information unless it displays a valid OMB control number.

CHANGE OF CORRESPONDENCE ADDRESS
Application

Address to:
Commissioner for Patents
P.O. Box 1450
Alexandria, VA 22313-1450.

Application Number	09/775,018
Filing Date	02/01/2001
First Named Inventor	Eric G. Suder
Art Unit	2661
Examiner Name	Hanh Nguyen
Attorney Docket Number	16312-P005US

Please change the Correspondence Address for the above-identified patent application to:

☐ Customer Number :

OR

☑ **Firm or Individual Name**	Kelly K. Kordzik				
Address	Winstead Sechrest & Minick P.C.				
Address	P.O. Box 50784				
City	Dallas	**State**	TX	**Zip**	75201
Country	U.S.A.				
Telephone	512.370.2851	**Fax**	512.370.2850		

This form cannot be used to change the data associated with a Customer Number. To change the data associated with an existing Customer Number use "Request for Customer Number Data Change" (PTO/SB/124).

I am the:

☐ Applicant/Inventor

☐ Assignee of record of the entire interest.
Statement under 37 CFR 3.73(b) is enclosed. (Form PTO/SB/96).

☑ Attorney or Agent of record. Registration Number 36,571.

☐ Registered practitioner named in the application transmittal letter in an application without an executed oath or declaration. See 37 CFR 1.33(a)(1). Registration Number_____.

Typed or Printed Name	Kelly K. Kordzik
Signature	
Date 9-16-05	Telephone 512.370.2851

NOTE: Signatures of all the inventors or assignees of record of the entire interest or their representative(s) are required. Submit multiple forms if more than one signature is required, see below*.

☑ *Total of 1 forms are submitted.

This collection of information is required by 37 CFR 1.33. The information is required to obtain or retain a benefit by the public which is to file (and by the USPTO to process) an application. Confidentiality is governed by 35 U.S.C. 122 and 37 CFR 1.14. This collection is estimated to take 3 minutes to complete, including gathering, preparing, and submitting the completed application form to the USPTO. Time will vary depending upon the individual case. Any comments on the amount of time you require to complete this form and/or suggestions for reducing this burden, should be sent to the Chief Information Officer, U.S. Patent and Trademark Office, U.S. Department of Commerce, P.O. Box 1450, Alexandria, VA 22313-1450. DO NOT SEND FEES OR COMPLETED FORMS TO THIS ADDRESS. **SEND TO: Commissioner for Patents, P.O. Box 1450, Alexandria, VA 22313-1450.**

If you need assistance in completing the form, call 1-800-PTO-9199 and select option 2.

UNITED STATES PATENT AND TRADEMARK OFFICE

UNITED STATES DEPARTMENT OF COMMERCE
United States Patent and Trademark Office
Address: COMMISSIONER FOR PATENTS
P.O. Box 1450
Alexandria, Virginia 22313-1450
www.uspto.gov

APPLICATION NO.	FILING DATE	FIRST NAMED INVENTOR	ATTORNEY DOCKET NO.	CONFIRMATION NO.
09/775,018	02/01/2001	Eric G. Suder	16312-P005US	7490

7590 10/12/2005

Kelly K. Kordzik
Suite 800
100 Congress Avenue
Austin, TX 78701

EXAMINER	
NGUYEN, HANH N	
ART UNIT	PAPER NUMBER
2668	

DATE MAILED: 10/12/2005

Please find below and/or attached an Office communication concerning this application or proceeding.

Office Action Summary	Application No.	Applicant(s)	
	09/775,018	SUDER ET AL.	
	Examiner	Art Unit	
	Hanh Nguyen	2668	

-- The MAILING DATE of this communication appears on the cover sheet with the correspondence address --

Period for Reply

A SHORTENED STATUTORY PERIOD FOR REPLY IS SET TO EXPIRE 3 MONTH(S) OR THIRTY (30) DAYS, WHICHEVER IS LONGER, FROM THE MAILING DATE OF THIS COMMUNICATION.

- Extensions of time may be available under the provisions of 37 CFR 1.136(a). In no event, however, may a reply be timely filed after SIX (6) MONTHS from the mailing date of this communication.
- If NO period for reply is specified above, the maximum statutory period will apply and will expire SIX (6) MONTHS from the mailing date of this communication.
- Failure to reply within the set or extended period for reply will, by statute, cause the application to become ABANDONED (35 U.S.C. § 133). Any reply received by the Office later than three months after the mailing date of this communication, even if timely filed, may reduce any earned patent term adjustment. See 37 CFR 1.704(b).

Status

1)☒ Responsive to communication(s) filed on *19 September 2005*.

2a)☐ This action is **FINAL**. 2b)☒ This action is non-final.

3)☐ Since this application is in condition for allowance except for formal matters, prosecution as to the merits is closed in accordance with the practice under *Ex parte Quayle*, 1935 C.D. 11, 453 O.G. 213.

Disposition of Claims

4)☒ Claim(s) *8-20,23-64,66,67,69,70 and 73-77* is/are pending in the application.

4a) Of the above claim(s) _____ is/are withdrawn from consideration.

5)☒ Claim(s) *8-20,23-37,59-64,66,67,69,70 and 75-77* is/are allowed.

6)☒ Claim(s) *38-45 and 56-58* is/are rejected.

7)☒ Claim(s) *73 and 74* is/are objected to.

8)☐ Claim(s) _____ are subject to restriction and/or election requirement.

Application Papers

9)☐ The specification is objected to by the Examiner.

10)☐ The drawing(s) filed on _____ is/are: a)☐ accepted or b)☐ objected to by the Examiner.

Applicant may not request that any objection to the drawing(s) be held in abeyance. See 37 CFR 1.85(a).

Replacement drawing sheet(s) including the correction is required if the drawing(s) is objected to. See 37 CFR 1.121(d).

11)☐ The oath or declaration is objected to by the Examiner. Note the attached Office Action or form PTO-152.

Priority under 35 U.S.C. § 119

12)☐ Acknowledgment is made of a claim for foreign priority under 35 U.S.C. § 119(a)-(d) or (f).

a)☐ All b)☐ Some * c)☐ None of:

1.☐ Certified copies of the priority documents have been received.

2.☐ Certified copies of the priority documents have been received in Application No. _____.

3.☐ Copies of the certified copies of the priority documents have been received in this National Stage application from the International Bureau (PCT Rule 17.2(a)).

* See the attached detailed Office action for a list of the certified copies not received.

HANH NGUYEN
PRIMARY EXAMINER

Attachment(s)

1) ☒ Notice of References Cited (PTO-892)
2) ☐ Notice of Draftsperson's Patent Drawing Review (PTO-948)
3) ☒ Information Disclosure Statement(s) (PTO-1449 or PTO/SB/08) Paper No(s)/Mail Date *2/1/01*.
4) ☐ Interview Summary (PTO-413) Paper No(s)/Mail Date. _____.
5) ☐ Notice of Informal Patent Application (PTO-152)
6) ☐ Other: _____.

DETAILED ACTION

Information Disclosure Statement

The information disclosure statement filed on 4/9/01 fails to comply with 37 CFR 1.98(a)(1), which requires the following: (1) a list of all patents, publications, applications, or other information submitted for consideration by the Office; (2) U.S. patents and U.S. patent application publications listed in a section separately from citations of other documents; (3) the application number of the application in which the information disclosure statement is being submitted on each page of the list; (4) a column that provides a blank space next to each document to be considered, for the examiner's initials; and (5) a heading that clearly indicates that the list is an information disclosure statement. The information disclosure statement has been placed in the application file, but the information referred to therein has not been considered.
The IDS filed on 4/9/01 fails to submit with a 1449 form which lists all the patents.

Withdrawal of Finality

Applicant's request filed on 9/19/05 for reconsideration of the finality of the rejection of the last Office action is persuasive and, therefore, the finality of that action is withdrawn.

Claim Rejections - 35 USC § 103

The following is a quotation of 35 U.S.C. 103(a) which forms the basis for all obviousness rejections set forth in this Office action:

> (a) A patent may not be obtained though the invention is not identically disclosed or described as set forth in section 102 of this title, if the differences between the subject matter sought to be patented and the prior art are such that the subject matter as a whole would have been obvious at the time the invention was made to a person

having ordinary skill in the art to which said subject matter pertains. Patentability shall not be negatived by the manner in which the invention was made.

Claims 38, 43, 44, 45, 56, are rejected under 35 U.S.C. 103(a) as being unpatentable over Chen et al.(US Pat.5,751,791) in view of O'Mahony (US Pat. 5,878,120).

Regards to claims 38 and 56, Chen teaches a system comprising: a Hub (Fig.1a, switch 90), a multimedia server (Fig. 1a, 92), a telephony device (telephone in 124) coupled to the hub (Fig. 1a, 90), and a work station coupled to the hub through the telephony device (Fig. 1a, work station 70c coupled to the hub 90 via telephone). Chen further discloses a data server coupled to the hub (fig.1a, server 92 coupled to switch 90). Chen discloses transfering data from the work station to the telephone, wherein the data sent from the work station is addressed for transmission to the data server (fig.1a, see col.3, lines 30-55); communicating audio information between the telephone and the multimedia server (see fig.1a, col.3, lines 30-55).

However, Chen does not disclose sufficiently throttling data sent from the work station to the telephone to increase a rate of the audio information transferred during the communication step. O'Mahony discloses throttling data sent from the work station to the telephone to increase a rate of the audio information transferred (fig.4, a micro controller 202 provided in data terminating equipment DCE (fig.1a) suspends data at step 418 to transmit voice at step 420; see abstract & col.9, lines 5-20). Therefore, it would have been obvious to one ordinary skilled in the art to implement the microcontroller 202 into the telephone of Chen in order to throttle data transmission to the telephone and increase audio transmission. The implementation reduces the delay occurred in audio transmission when the amount of audio data is low.

In claim 43, Chen does not disclose reducing a future amount of data from being transferred from the work station if the amount of data exceeds a predetermined threshold. The Official Notice is taken that it is a well-known skill in the art such as data flow control to reduce a future amount of data from being transferred from a work station if the amount of data exceeds a predetermined threshold in order to prevent data congestion.

Regarding claims 44 and 45, Chen discloses monitoring an amount of audio information received by the telephone from the multimedia server (fig.9, circuit 936 monitoring Rx voice buffer 932 via signal line 935 to control the data flow, col.14, lines 50-60).

Claims 39-42, are rejected under 35 U.S.C. 103(a) as being unpatentable over Chen et al.(US Pat.5,751,791) in view of O'Mahony (US Pat. 5,878,120), and further in view of Murphy (Pat. 6,856,613).

In claims 39-42, Chen et al. discloses that the hub (switch 90), multimedia server (server 92), data server (server 92), telephone (telephone in housing 124) and work station (work station 70c) are coupled to each other via a network (communicate via a telecommunication network 88). See col.3, lines 30-40. The communication network 88 can be ATM network comprising ATM path 96 (packet switch network, see col.4, lines 17-25). Chen does not disclose that the network is TCP/IP network and the protocol is IP protocol. Murphy discloses a network 12 (fig.1) comprising VOIP telephones 14a-d coupling via IP network. Therefore, it would have been to one ordinary skilled in the art substitute the IP network into the ATM network 88 of Chen in order to communicate between devices via IP network, ATM network and packet switch network.

Claims 57-58 are rejected under 35 U.S.C. 103(a) as being unpatentable over Lee (US Pat. 6,876,648 B1) in view of O' Mahony (Pat. 5,878,120).

With regards to claim 57, Lee teaches an IP telephony device (Fig. 3) comprising: an input data port for receiving data (Fig. 3, input/output 14), wherein the data is addressed for transmission to a location other than the IP telephony device (Fig. 3, I/O 14 transmits data externally via hand set 10, col.4, lines 52-60); a speaker (speaker phone 12, fig.3); a microphone (a headset, fig.3); circuitry for communicating information to and from the IP telephony device (Fig.3, combination of mux 16, handset 10 and speakerphone 12); a circuitry for communicating audio information between speaker and the microphone (fig.3, mux 16). Lee does not disclose a circuitry for suffciently throttling the data so that the communication of the information can be performed real-time. O'Mahony discloses throttling data sent from the work station to the telephone to increase a rate of the audio information transferred (fig.4, a micro controller 202 provided in data terminating equipment DCE (fig.1a) suspends data at step 418 to transmit voice at step 420; see abstract & col.9, lines 5-20). Therefore, it would have been obvious to one ordinary skilled in the art to implement the microcontroller 202 into the telephone of Lee in order to throttle data transmission to the telephone and increase audio transmission. The implementation reduces the delay occurred in audio transmission when the amount of audio data is low.

Claim 58 is rejected because the IP telephony device communicates using TCP/IP protocol (see fig.1).

Allowable Subject Matter

Claims 8-20, 23-37, 46-55 and 59-64, 66, 67, 69, 70 and 73-77 are allowed.

Claims 73, 74 are objected to as being dependent upon a rejected base claim, but would be allowable if rewritten in independent form including all of the limitations of the base claim and any intervening claims.

Response to Arguments

Applicant's arguments with respect to claims 38-45, 56-58 have been considered and are moot in view of the new ground(s) of rejection.

Conclusion

The prior art made of record and not relied upon is considered pertinent to applicant's disclosure..

Kim et al. (pat. 6678280 B1) discloses Voice packet transmission controll method in gateway system and device thereof.

Nakajima (Pat. 6839341 B1) discloses Device capable of Accommodating existing voice terminals.

Gallick (Pat. 6,798,768 B1) discloses Multimedia call routing in an IP network.

Any inquiry concerning this communication or earlier communications from the examiner should be directed to Hanh Nguyen whose telephone number is 571 272 3092. The examiner can normally be reached on Monday-FRiday from 8:30 to 4:30PM. The examiner can also be reached on alternate

If attempts to reach the examiner by telephone are unsuccessful, the examiner's supervisor, Chieh Fan, can be reached on 571 272 3042. The fax phone number for the organization where this application or proceeding is assigned is 571-273-8300.

Information regarding the status of an application may be obtained from the Patent Application Information Retrieval (PAIR) system. Status information for published applications may be obtained from either Private PAIR or Public PAIR. Status information for unpublished applications is available through Private PAIR only. For more information about the PAIR system, see http://pair-direct.uspto.gov. Should you have questions on access to the Private PAIR system, contact the Electronic Business Center (EBC) at 866-217-9197 (toll-free).

Hanh Nguyen

October 11, 2005

HANH NGUYEN
PRIMARY EXAMINER

In Place of FORM PTO-1449 (Modified)

LIST OF PATENTS AND PUBLICATIONS FOR APPLICANT'S INFORMATION DISCLOSURE STATEMENT

Serial No.: 09/775,018
Applicant: Eric G. Suder et al.
Filing Date: (herewith)
Group: 2668
Atty. Docket No.: 16312-P005US

31033 U.S. PTO
09/775018
02/01/01

Reference Designation

U.S. PATENT DOCUMENTS

Examiner Initial	Document Number	Date	Name	Class	Subclass	Filing Date if Appropriate
AAA						
ABA						
ACA						
ADA						
AEA						
AFA						
AGA						
AHA						
AIA						
AJA						
AKA						

FOREIGN PATENT DOCUMENTS

Examiner Initial	Document Number	Date	Country	Class	Subclass	Translation Yes	Translation No
ALA							
AMA							
ANA							
AOA							
APA							

OTHER ART (Including Author, Title, Date, Pertinent Pages, Etc.)

Examiner Initial		
HN	ARA	Harry Newton, *Newton's Telecom Dictionary*, 16th Edition, copyright 2000, pp. 126-127.
	ASA	
	ATA	

Examiner: HNguyen Date Considered: 10/7/05

EXAMINER: Initial if reference considered, whether or not citation is in conformance with MPEP 609; Draw line through citation if not in conformance and not considered. Include copy of this form with next communication to applicant.

::ODMA\PCDOCS\AUSTIN_1\157652\1
207:16312-P005US

Notice of References Cited	Application/Control No. 09/775,018	Applicant(s)/Patent Under Reexamination SUDER ET AL.	
	Examiner Hanh Nguyen	Art Unit 2668	Page 1 of 1

U.S. PATENT DOCUMENTS

*		Document Number Country Code-Number-Kind Code	Date MM-YYYY	Name	Classification
	A	US-6,678,280 b1	01-2004	Kim et al.	370/429
	B	US-6,839,341 b1	01-2005	Nakajima, Yasunori	370/352
	C	US-6,876,648 b1	04-2005	Lee, Dae-Jin	370/353
	D	US-5,751,791	05-1998	Chen et al.	379/88.13
	E	US-5,878,120	03-1999	O'Mahony, Barry	379/93.09
	F	US-6,798,768 b1	09-2004	Gallick et al.	370/352
	G	US-			
	H	US-			
	I	US-			
	J	US-			
	K	US-			
	L	US-			
	M	US-			

FOREIGN PATENT DOCUMENTS

*		Document Number Country Code-Number-Kind Code	Date MM-YYYY	Country	Name	Classification
	N					
	O					
	P					
	Q					
	R					
	S					
	T					

NON-PATENT DOCUMENTS

*		Include as applicable: Author, Title Date, Publisher, Edition or Volume, Pertinent Pages)
	U	
	V	
	W	
	X	

*A copy of this reference is not being furnished with this Office action. (See MPEP § 707.05(a).)
Dates in MM-YYYY format are publication dates. Classifications may be US or foreign.

Index of Claims

Application/Control No.	Applicant(s)/Patent under Reexamination
09/775,018	SUDER ET AL.
Examiner	**Art Unit**
Hanh Nguyen	2668

√	Rejected	–	(Through numeral) Cancelled	N	Non-Elected	A	Appeal
=	Allowed	+	Restricted	I	Interference	O	Objected

Claim		Date
Final	Original	10/11/05
	1	
	2	
	3	
	4	
	5	
	6	
	7	
	8	
	9	
	10	
	11	
	12	
	13	
	14	
	15	
	16	
	17	
	18	
	19	
	20	=
	21	
	22	
	23	
	24	
	25	
	26	
	27	
	28	
	29	
	30	
	31	
	32	
	33	
	34	
	35	
	36	
	37	√
	38	
	39	
	40	
	41	
	42	
	43	
	44	√
	45	√
	46	
	47	
	48	
	49	
	50	

Claim		Date
Final	Original	10/11/05
	51	
	52	
	53	
	54	
	55	
	56	√
	57	√
	58	√
	59	
	60	
	61	
	62	
	63	
	64	
	65	
	66	
	67	
	68	
	69	
	70	
	71	
	72	
	73	O
	74	
	75	
	76	
	77	
	78	
	79	
	80	
	81	
	82	
	83	
	84	
	85	
	86	
	87	
	88	
	89	
	90	
	91	
	92	
	93	
	94	
	95	
	96	
	97	
	98	
	99	
	100	

Claim		Date
Final	Original	
	101	
	102	
	103	
	104	
	105	
	106	
	107	
	108	
	109	
	110	
	111	
	112	
	113	
	114	
	115	
	116	
	117	
	118	
	119	
	120	
	121	
	122	
	123	
	124	
	125	
	126	
	127	
	128	
	129	
	130	
	131	
	132	
	133	
	134	
	135	
	136	
	137	
	138	
	139	
	140	
	141	
	142	
	143	
	144	
	145	
	146	
	147	
	148	
	149	
	150	

Search Notes	Application/Control No.	Applicant(s)/Patent under Reexamination
	09/775,018	SUDER ET AL.
	Examiner	Art Unit
	Hanh Nguyen	2668

SEARCHED			
Class	Subclass	Date	Examiner
370	352	10/5/2005	HN
	389		
	401		
	493		
	494		
	495		
	535		
	395.42		
	395.21		
	433		
	443		
	444		
370	445		

INTERFERENCE SEARCHED			
Class	Subclass	Date	Examiner

SEARCH NOTES (INCLUDING SEARCH STRATEGY)		
	DATE	EXMR
east	10/5/2005	HN

IFW 2661

OIPE IAP25
DEC 07 2005
PATENT & TRADEMARK OFFICE

PTO/SB/21 (09-04)
Approved for use through 07/31/2006. OMB 0651-0031
U.S. Patent and Trademark Office; U.S. DEPARTMENT OF COMMERCE
Under the Paperwork Reduction Act of 1995, no persons are required to respond to a collection of information unless it displays a valid OMB control number.

TRANSMITTAL FORM

(to be used for all correspondence after initial filing)

Total Number of Pages in This Submission: 22

Application Number	09/775,018
Filing Date	02/01/2001
First Named Inventor	Eric G. Suder
Art Unit	2661
Examiner Name	Hanh Nguyen
Attorney Docket Number	16312-P005US

ENCLOSURES *(Check all that apply)*

- ☐ Fee Transmittal Form
  - ☐ Fee Attached
- ☑ Amendment/Reply
  - ☐ After Final
  - ☐ Affidavits/declaration(s)
- ☐ Extension of Time Request
- ☐ Express Abandonment Request
- ☐ Information Disclosure Statement
- ☐ Certified Copy of Priority Document(s)
- ☐ Reply to Missing Parts/ Incomplete Application
  - ☐ Reply to Missing Parts under 37 CFR 1.52 or 1.53
- ☐ Drawing(s)
- ☐ Licensing-related Papers
- ☐ Petition
- ☐ Petition to Convert to a Provisional Application
- ☐ Power of Attorney, Revocation Change of Correspondence Address
- ☐ Terminal Disclaimer
- ☐ Request for Refund
- ☐ CD, Number of CD(s) _____
  - ☐ Landscape Table on CD
- ☐ After Allowance Communication to TC
- ☐ Appeal Communication to Board of Appeals and Interferences
- ☐ Appeal Communication to TC **(Appeal Notice, Brief, Reply Brief)**
- ☐ Proprietary Information
- ☐ Status Letter
- ☑ Other Enclosure(s) (please Identify below):
  Return Postcard

Remarks

SIGNATURE OF APPLICANT, ATTORNEY, OR AGENT

Firm Name	Winstead Sechrest & Minick P.C.		
Signature			
Printed name	Kelly K. Kordzik		
Date	12/05/2005	Reg. No.	36,571

CERTIFICATE OF TRANSMISSION/MAILING

I hereby certify that this correspondence is being facsimile transmitted to the USPTO or deposited with the United States Postal Service with sufficient postage as first class mail in an envelope addressed to: Commissioner for Patents, P.O. Box 1450, Alexandria, VA 22313-1450 on the date shown below:

Signature	Toni Stanley		
Typed or printed name	Toni Stanley	Date	12/05/2005

This collection of information is required by 37 CFR 1.5. The information is required to obtain or retain a benefit by the public which is to file (and by the USPTO to process) an application. Confidentiality is governed by 35 U.S.C. 122 and 37 CFR 1.11 and1.14. This collection is estimated to 2 hours to complete, including gathering, preparing, and submitting the completed application form to the USPTO. Time will vary depending upon the individual case. Any comments on the amount of time you require to complete this form and/or suggestions for reducing this burden, should be sent to the Chief Information Officer, U.S. Patent and Trademark Office, U.S. Department of Commerce, P.O. Box 1450, Alexandria, VA 22313-1450. DO NOT SEND FEES OR COMPLETED FORMS TO THIS ADDRESS. **SEND TO: Commissioner for Patents, P.O. Box 1450, Alexandria, VA 22313-1450.**

If you need assistance in completing the form, call 1-800-PTO-9199 and select option 2.

IN THE UNITED STATES PATENT AND TRADEMARK OFFICE

In re Application: Suder et al.

Serial No.: 09/775,018

Filed: February 1, 2001

Art Unit: 2661

Examiner: Hanh Nguyen

For: QUALITY OF SERVICE IN A VOICE OVER IP TELEPHONE SYSTEM

FOURTH AMENDMENT UNDER 37 C.F.R. § 1.111

Mail Stop Amendment
Commissioner for Patents
P.O. Box 1450
Alexandria, VA 22313-1450

Dear Sir:

In response to the Office Action having a mailing date of October 12, 2005, with a three-month shortened statutory period for response set to expire on January 12, 2006, please amend the above-identified Application as follows:

CERTIFICATION UNDER 37 C.F.R. § 1.8

I hereby certify that this correspondence is being deposited with the United States Postal Service with sufficient postage as first class mail in an envelope addressed to Mail Stop Amendment, Commissioner for Patents, P.O. Box 1450, Alexandria, VA 22313-1450, on 12-5, 2005.

Toni Stanley
Signature

Toni Stanley
(Printed name of person certifying)

IN THE CLAIMS

Please rewrite the claims as follows:

1. (cancelled)

2. (cancelled)

3. (cancelled)

4. (cancelled)

5. (cancelled)

6. (cancelled)

7. (cancelled)

8. (previously presented) An information handling system comprising:

a hub;

a multimedia server coupled to the hub;

a telephony device coupled to the hub; and

a first network device coupled to the hub through the telephony device, wherein the telephony device includes circuitry for throttling data sent from the first network device, wherein the telephony device includes circuitry for monitoring an amount of data addressed to and received by the telephony device, wherein the throttling circuitry reduces a future amount of data from being transferred from the first network device if the amount of data addressed to and received by the telephony device falls below a predetermined threshold.

9. (original) The system as recited in claim 8, wherein the monitoring circuitry comprises a jitter buffer where the predetermined threshold is a predetermined level within the jitter buffer.

10. (original) The system as recited in claim 8, wherein the monitoring circuitry further comprises circuitry for sending a congestion message to the multimedia server when the amount of data addressed to and received by the telephony device falls below the predetermined threshold.

11. (original) The system as recited in claim 10, wherein the multimedia server further comprises circuitry for sending a throttling signal to the telephony device in response to receipt of the congestion message from the monitoring circuitry.

12. (original) The system as recited in claim 11, wherein the throttling circuitry in the telephony device throttles the future amount of data sent from the first network device in response to receipt of the throttling signal.

13. (original) The system as recited in claim 12, wherein the throttling signal includes a mode level in which the throttling circuitry should operate.

14. (original) The system as recited in claim 13, wherein the throttling circuitry adjusts its level of throttling of the data in response to the mode level included in the throttling signal.

15. (original) The system as recited in claim 14, wherein the mode level is a most aggressive mode, wherein the throttling circuitry will throttle the future amount of data sent from the first network device at a highest level in response to the mode level being in the most aggressive mode.

16. (original) The system as recited in claim 15, wherein the sending circuitry in the multimedia server will designate the mode level at the most aggressive mode as long as the congestion message is received from any telephony device coupled to the multimedia server within a specified time period.

17. (original) The system as recited in claim 16, wherein the throttling signal will switch to a least aggressive mode if the congestion message is not received from any telephony device coupled to the multimedia server within the specified time period.

18. (original) The system as recited in claim 17, wherein the throttling circuitry will throttle the future amount of data sent from the first network device at a level lower than the highest level in response to the mode level being in the least aggressive mode.

19. (original) The system as recited in claim 18, wherein the throttling signal will contain a signal to stop the throttling of the future amount of data if the congestion message is not received from any telephony device coupled to the multimedia server within the specified time period while the mode level has been in the least aggressive mode.

20. (original) The system as recited in claim 19, further comprising another telephony device coupled between the hub and a second network device, wherein the telephony device also includes throttling circuitry for throttling a future amount of data sent from the second network device in response to receipt of the throttling signal.

21. (cancelled)

22. (cancelled)

23. (original) An information handling system comprising:

a TCP/IP network;

a hub;

a multimedia server coupled to the hub via the TCP/IP network;

a first IP telephony device coupled to the hub via the TCP/IP network;

a first network device coupled to the first IP telephony device;

a second network device coupled to the hub via the TCP/IP network, wherein data sent from the first network device is addressed for transmission to the second network device and is transmitted through the first IP telephony device to the TCP/IP network, wherein the first IP telephony device includes first circuitry for monitoring if an amount of multimedia data being addressed to the IP telephony device and received over the TCP/IP network falls below a first predetermined threshold, wherein the first IP telephony device includes first circuitry for throttling the data sent from the first network device in response to the first monitoring circuitry determining that the amount of multimedia data being received by the first IP telephony device over the TCP/IP network falls below the first predetermined threshold.

24. (original) The system as recited in claim 23, further comprising:

a second IP telephony device coupled to the hub via the TCP/IP network; and

a third network device coupled to the second IP telephony device, wherein data sent from the third network device is addressed for transmission to the second network device and is transmitted through the second IP telephony device to the TCP/IP network,

wherein the second IP telephony device includes second circuitry for throttling the data sent from the third network device in response to the first monitoring circuitry determining that the amount of multimedia data being received by the first IP telephony device over the TCP/IP network falls below the first predetermined threshold.

25. (original) The system as recited in claim 24, wherein the first monitoring circuitry further comprises first circuitry for sending a first congestion message to the multimedia server over the TCP/IP network when the amount of multimedia data being received by the first IP telephony device over the TCP/IP network falls below the first predetermined threshold.

26. (original) The system as recited in claim 25, wherein the multimedia server further comprises circuitry for sending a throttling signal to the first and second IP telephony devices over the TCP/IP network in response to receipt of the first congestion message from the first monitoring circuitry.

27. (original) The system as recited in claim 26, wherein the first throttling circuitry in the first IP telephony device throttles the data sent from the first network device in response to receipt of the throttling signal, wherein the second throttling circuitry in the second IP telephony device throttles the data sent from the third network device in response to receipt of the throttling signal.

28. (original) The system as recited in claim 27, wherein the throttling signal includes a mode level in which the first and second throttling circuitries should operate.

29. (original) The system as recited in claim 28, wherein the first throttling circuitry adjusts its level of throttling of the data in response to the mode level included in the throttling signal, wherein the second throttling circuitry adjusts its level of throttling of the data in response to the mode level included in the throttling signal.

30. (original) The system as recited in claim 29, wherein the mode level is a most aggressive mode, wherein the first throttling circuitry will throttle the data sent from the first network device at a highest level in response to the mode level being in the most aggressive mode, wherein the

second throttling circuitry will throttle the data sent from the third network device at a highest level in response to the mode level being in the most aggressive mode.

31. (original) The system as recited in claim 30, wherein the second IP telephony device includes second circuitry for monitoring if a second amount of multimedia data being received by the second IP telephony device over the TCP/IP network falls below a second predetermined threshold, wherein the second monitoring circuitry further comprises second circuitry for sending a second congestion message to the multimedia server over the TCP/IP network when the second amount of multimedia data being received by the second IP telephony device over the TCP/IP network falls below the second predetermined threshold.

32. (original) The system as recited in claim 31, wherein the sending circuitry in the multimedia server will designate the mode level at the most aggressive mode as long as the first or second congestion messages are received within a specified time period.

33. (original) The system as recited in claim 31, wherein the throttling signal will switch to a least aggressive mode if the congestion message is not received from any IP telephony device coupled to the multimedia server within the specified time period.

34. (original) The system as recited in claim 32, wherein the throttling circuitry will throttle the data sent from the second network device at a level lower than the highest level in response to the mode level being in the least aggressive mode.

35. (original) The system as recited in claim 33, wherein the throttling signal will contain a signal to stop the throttling of the data if the congestion message is not received from any IP telephony device coupled to the multimedia server within the specified time period while the mode level has been in the least aggressive mode.

36. (original) The system as recited in claim 34, wherein the multimedia data includes real-time audio information.

37. (original) The system as recited in claim 23, wherein the data sent from the first network device is sufficiently throttled so that the first IP telephony device can communicate real-time signals to and from the multimedia server over the TCP/IP network.

38. (currently amended) In an information handling system comprising a hub, a multimedia server ("multimedia server") coupled to the hub, a telephone coupled to the hub, a workstation coupled to the hub through the telephone, and a data server coupled to the hub, a method comprising the steps of:

transferring data from the workstation to the telephone, wherein the data sent from the workstation is addressed for transmission to the data server;

communicating audio information between the telephone and the multimedia server; and

sufficiently throttling the data sent from the workstation to the telephone to increase a rate of transfer of the audio information during the communicating step, wherein the throttling step further comprises the step of monitoring an amount of the audio information being received by the telephone from the multimedia server.

39. (original) The method as recited in claim 38, wherein the hub, multimedia server, data server, telephone, and workstation are coupled to each other via a network.

40. (original) The method as recited in claim 39, wherein the network is a TCP/IP network.

41. (original) The method as recited in claim 39, wherein the network is a packet switched network.

42. (original) The method as recited in claim 39, wherein the telephone and multimedia server communicate using an IP protocol.

43. (currently amended) ~~The method as recited in claim 38~~ In an information handling system comprising a hub, a multimedia server ("multimedia server") coupled to the hub, a telephone coupled to the hub, a workstation coupled to the hub through the telephone, and a data server coupled to the hub, a method comprising the steps of:

transferring data from the workstation to the telephone, wherein the data sent from the workstation is addressed for transmission to the data server;

communicating audio information between the telephone and the multimedia server; and

sufficiently throttling the data sent from the workstation to the telephone to increase a rate of transfer of the audio information during the communicating step, wherein the throttling step further comprises the step of reducing a future amount of data from being transferred from the workstation if the amount of data exceeds a predetermined threshold.

44. (cancelled)

45. (currently amended) The method as recited in claim ~~44~~ 38, wherein the monitoring step further comprises the step of monitoring a predetermined level within a jitter buffer.

46. (previously amended) In an information handling system comprising a hub, a multimedia server ("multimedia server") coupled to the hub, a telephone coupled to the hub, a workstation coupled to the hub through the telephone, and a data server coupled to the hub, a method comprising the steps of:

transferring data from the workstation to the telephone, wherein the data sent from the workstation is addressed for transmission to the data server;

communicating audio information between the telephone and the multimedia server; and

sufficiently throttling the data sent from the workstation to the telephone to increase a rate of transfer of the audio information during the communicating step, wherein the throttling step further comprises the step of monitoring an amount of the audio information being received by the telephone from the multimedia server, wherein the monitoring step further comprises the step of the telephone sending a congestion message to the multimedia server when the amount of the audio information falls below the predetermined level.

47. (original) The method as recited in claim 46, further comprising the step of the multimedia server sending a throttling signal to the telephone in response to receipt of the congestion message.

48. (original) The method as recited in claim 47, wherein the throttling step operates in response to receipt of the throttling signal.

49. (original) The method as recited in claim 48, wherein the throttling signal includes a mode level.

50. (original) The method as recited in claim 49, wherein the throttling step further comprises the step of adjusting a level of throttling of the data in response to the mode level included in the throttling signal.

51. (original) The method as recited in claim 50, wherein the step of the multimedia server sending a throttling signal to the telephone in response to receipt of the congestion message further comprises the step of setting the mode level to a most aggressive mode, wherein the throttling step will throttle the future amount of data sent from the workstation at a highest level in response to the mode level being in the most aggressive mode.

52. (original) The method as recited in claim 51, wherein the setting step will designate the mode level at the most aggressive mode as long as the congestion message is received from any telephone coupled to the multimedia server within a specified time period.

53. (original) The method as recited in claim 52, wherein the step of the multimedia server sending a throttling signal to the telephone in response to receipt of the congestion message further comprises the step of setting the mode level to a least aggressive mode if the congestion

message is not received from any telephone coupled to the multimedia server within the specified time period.

54. (original) The method as recited in claim 53, wherein the throttling step will throttle the future amount of data sent from the workstation at a level lower than the highest level in response to the mode level being in the least aggressive mode.

55. (original) The method as recited in claim 54, wherein the step of the multimedia server sending a throttling signal to the telephone in response to receipt of the congestion message further comprises the step of sending a message to stop the throttling of the future amount of data if the congestion message is not received from any telephone coupled to the multimedia server within the specified time period while the mode level has been in the least aggressive mode.

56. (original) The method as recited in claim 38, wherein the throttling results in no data being sent from the workstation to the telephone.

57. (cancelled)

58. (cancelled)

59. (previously presented) An IP telephony device comprising:

an input data port for receiving data, wherein the data is addressed for transmission to a location other than the IP telephony device;

circuitry for communicating information to and from the IP telephony device;

circuitry for sufficiently throttling the data so that the communication of the information can be performed in real-time, wherein the IP telephony device communicates the information using an IP protocol, wherein the throttling circuitry further comprises circuitry for sending a congestion message from a data output port when the amount of the information being received by the IP telephony device falls below a predetermined level.

60. (original) The IP telephony device as recited in claim 59, wherein the throttling circuitry throttles the future amount of data received at the input data port in response to receipt of a throttling signal at the input data port, wherein the throttling signal is a function of the congestion message.

61. (original) The IP telephony device as recited in claim 60, wherein the throttling signal includes a mode level in which the throttling circuitry should operate.

62. (original) The IP telephony device as recited in claim 61, wherein the throttling circuitry adjusts its level of throttling of the data in response to the mode level included in the throttling signal.

63. (original) The IP telephony device as recited in claim 62, wherein when the mode level is a most aggressive mode, the throttling circuitry will throttle the future amount of data at a highest level in response to the mode level being in the most aggressive mode.

64. (original) The IP telephony device as recited in claim 63, wherein the throttling circuitry will throttle the future amount of data sent from the workstation at a level lower than the highest level in response to the mode level being in a least aggressive mode.

65. (cancelled)

66. (original) The IP telephony device as recited in claim 60, further comprising:

a microphone;

a speaker; and

circuitry for communicating the audio information to the speaker and from the microphone.

67. (previously amended) A multimedia server comprising:

a network connection for connecting the multimedia server to a data network, wherein the network is a TCP/IP network;

circuitry operable for communicating audio information with a telephone connected to the data network;

circuitry operable for sending a throttling signal onto the data network in response to receipt of a congestion message from the data network, wherein the throttling signal includes a mode level, wherein the sending circuitry will designate the mode level at a most aggressive mode as long as the congestion message is received within a specified time period.

68. (cancelled)

69. (original) The multimedia server as recited in claim 67, wherein the network is a packet switched network.

70. (original) The multimedia server as recited in claim 67, wherein the communicating circuitry further comprises circuitry operable for communicating the audio information using an IP protocol.

71. (cancelled)

72. (cancelled)

73. (previously amended) The multimedia server as recited in claim 67, wherein the throttling signal will switch to a least aggressive mode if the congestion message is not received within the specified time period.

74. (original) The multimedia server as recited in claim 73, wherein the throttling signal will contain a stop data throttling signal if the congestion message is not received within the specified time period while the mode level has been in the least aggressive mode.

75. (original) The multimedia server as recited in claim 67, further comprising:

a peripheral card adaptable for coupling to a telecommunications network.

76. (original) The multimedia server as recited in claim 75, wherein the telecommunications network is a public switched telephone network.

77. (original) The multimedia server as recited in claim 75, further comprising:

switching circuitry for communicating the audio information between the network connection and the peripheral card.

REMARKS

Claims 8-20, 23-64, 66-67, 69-70 and 73-77 are pending in the Application.

Claims 38, 43-45 and 56 stand rejected under 35 U.S.C. § 103(a) as being unpatentable over *Chen et al.* (U.S. Patent No. 5,751,791) in view of *O'Mahony* (U.S. Patent No. 5,878,120). Claim 38 has been amended to incorporate the limitations of claim 44. Applicants traverse the rejections of claims 38, 43-45 and 56.

Amended Claim 38 recites that "the throttling step further comprises the step of reducing a future amount of data from being transferred from the workstation if the amount of data exceeds a predetermined threshold." The Examiner rejects this claim limitation by taking Official Notice that it is well-known in the art of data flow control to reduce a future amount of data from being transferred from a workstation if the amount of data exceeds a predetermined threshold in order to prevent data congestion.

Applicants respectfully traverse the Examiner's taking of Official Notice. Official Notice unsupported by documentary evidence should only be taken by the examiner where the facts asserted to be well-known, or to be common knowledge in the art, are capable of instant and unquestionable demonstration as being well-known. MPEP § 2144.03. Applicants respectfully assert that reducing a future amount of data from being transferred from a workstation if the amount of data exceeds a predetermined threshold is not capable of instant and unquestionable demonstration as being well-known. It would not be appropriate for the examiner to take official notice of facts without citing a prior art reference where the facts asserted to be well-known are not capable of instant and unquestionable demonstration as being well-known. *Id.* Thus, Applicants respectfully assert that the Examiner must cite a prior art reference in support of the Examiner's taking of Official Notice.

The claims recite that data is throttled from the workstation to the telephone to increase a rate of transfer of the audio information during a step of communicating audio information between the telephone and a multimedia server, and this throttling further comprises reducing a future amount of

data from being transferred from the workstation if the amount of data exceeds a predetermined threshold. This is not well-known in the art. Furthermore, the claim specifically recites that such a throttling step, which further comprises the reducing step, is done to increase a rate of transfer of the audio information during a step of communicating audio information between the telephone and the multimedia server. It is not done in order to prevent data congestion, per se, contrary to the Examiner's assertion for why he is taking Official Notice. As a result of the foregoing, Applicants respectfully assert that Examiner has failed to assert a *prima facie* case of obviousness in rejecting amended claim 38.

With respect to claim 44, the Examiner has made the following assertion:

> Regarding claims 44 and 45, *Chen* discloses monitoring an amount of audio information received by the telephone from the multimedia server (fig. 9, circuit 936 monitoring Rx voice buffer 932 via signal line 935 to control the data flow, col. 14, lines 50-60).

First, the references to Figure 9 are to the *O'Mahony* reference, and not to the *Chen* reference. This circuitry in *O'Mahony* does not monitor an amount of audio information being received by the telephone from the multimedia server. Instead, when the system in *O'Mahony* desires to send audio information, it suspends the data transmission in step 857 (Figure 8b), and then transmits a special character in step 859, which is recognized by circuit 936 in Figure 9. Thus, there is no monitoring of an amount of audio information being received by the telephone, but instead circuit 936 merely looks for the reception of the special character sent by circuit 924 from the other side. *See* col. 13, lines 11-22 of *O'Mahony*. *See also* col. 14, lines 53-61.

As a result, one skilled in the art at the time the invention was made would not have been able to arrive at the invention specifically recited in claim 44, since the combination of *Chen* and *O'Mahony* does not teach or suggest all of the claim limitation.

With respect to claim 45, the Examiner is apparently equating the recited jitter buffer with buffer 932 disclosed in *O'Mahony*. Applicants respectfully traverse. Claim 45 is dependent upon

claim 44, and further recites that the monitoring step further comprises the step of monitoring a predetermined level within a jitter buffer. Buffer 932 is not a jitter buffer, and further this buffer 932 does not monitor an amount of audio information being received. Instead buffer 932 is merely there to receive the voice data from mux 934 when circuit 936 detects the special character. Buffer 932 is just temporary storage for the received audio data. As a result, one skilled in the art at the time the invention was made would not have been able to recreate the invention specifically recited in claim 45, since the combination of *Chen* and *O'Mahony* does not teach or suggest these claim limitations.

Claims 39-42 stand rejected under 35 U.S.C. § 103(a) as being unpatentable over *Chen* in view of *O'Mahony* and further in view of *Murphy* (U.S. Patent No. 6,856,613). In response, Applicants respectfully traverse these rejections. Since these claims depend on allowable claims, Applicants respectfully assert that these claims are also allowable over the cited prior art.

Claims 57-58 stand rejected under 35 U.S.C. § 103(a) as being unpatentable over *Lee* in view of *O'Mahony*. These claims have been cancelled. Therefore, these rejections are moot.

The Examiner has asserted that claims 73 and 74 are objected to as being dependant upon a rejected base claim. However, these claims are actually dependant upon allowable claims. Therefore these claims are allowable themselves.

In conclusion, as a result of the foregoing, Applicants respectfully assert that all of the claims in the application are now in condition for allowance.

Respectfully submitted,

WINSTEAD SECHREST & MINICK P.C.

Attorneys for Applicant

By:_____
Kelly K. Kordzik
Reg. No. 36,571

P.O. Box 50784
Dallas, Texas 75201
(512) 3702851

Austin_1\298026\1
16312-P005US 12/2/2005

PATENT APPLICATION FEE DETERMINATION RECORD
Effective October 1, 2000

Application or Docket Number: 09775018

CLAIMS AS FILED - PART I

	(Column 1)	(Column 2)
TOTAL CLAIMS 77		
FOR	NUMBER FILED	NUMBER EXTRA
TOTAL CHARGEABLE CLAIMS	77 minus 20=	57
INDEPENDENT CLAIMS	5 minus 3 =	2
MULTIPLE DEPENDENT CLAIM PRESENT		☐

* If the difference in column 1 is less than zero, enter "0" in column 2

SMALL ENTITY TYPE ☐ OR OTHER THAN SMALL ENTITY

RATE	FEE		RATE	FEE
BASIC FEE	655.00	OR	BASIC FEE	710.00
X$ 9=	513	OR	X$18=	
X40=	80	OR	X80=	
+135=		OR	+270=	
TOTAL	948	OR	TOTAL	

CLAIMS AS AMENDED - PART II

8/26/04

AMENDMENT A

	(Column 1) CLAIMS REMAINING AFTER AMENDMENT		(Column 2) HIGHEST NUMBER PREVIOUSLY PAID FOR	(Column 3) PRESENT EXTRA
Total	77	Minus	77	—
Independent	5	Minus	5	—
FIRST PRESENTATION OF MULTIPLE DEPENDENT CLAIM				☐

SMALL ENTITY OR OTHER THAN SMALL ENTITY

RATE	ADDITIONAL FEE		RATE	ADDITIONAL FEE
X$ 9=		OR	X$18=	
X40=		OR	X80=	
+135=		OR	+270=	
TOTAL ADDIT. FEE		OR	TOTAL ADDIT. FEE	

AMENDMENT B

	(Column 1) CLAIMS REMAINING AFTER AMENDMENT		(Column 2) HIGHEST NUMBER PREVIOUSLY PAID FOR	(Column 3) PRESENT EXTRA
Total	75	Minus	77	—
Independent	8	Minus	5	3
FIRST PRESENTATION OF MULTIPLE DEPENDENT CLAIM				☐

RATE	ADDITIONAL FEE		RATE	ADDITIONAL FEE
X$ 9=		OR	X$18=	
X40=		OR	X80=	30000
+135=		OR	+270=	
TOTAL ADDIT. FEE		OR	TOTAL ADDIT. FEE	30000

pd 3-24-05

12/7/05

AMENDMENT C

	(Column 1) CLAIMS REMAINING AFTER AMENDMENT		(Column 2) HIGHEST NUMBER PREVIOUSLY PAID FOR	(Column 3) PRESENT EXTRA
Total	60	Minus	77	
Independent	8	Minus	8	
FIRST PRESENTATION OF MULTIPLE DEPENDENT CLAIM				☐

RATE	ADDITIONAL FEE		RATE	ADDITIONAL FEE
X$ 9=		OR	X$18=	
X40=		OR	X80=	
+135=		OR	+270=	
TOTAL ADDIT. FEE		OR	TOTAL ADDIT. FEE	

* If the entry in column 1 is less than the entry in column 2, write "0" in column 3.
** If the "Highest Number Previously Paid For" IN THIS SPACE is less than 20, enter "20."
*** If the "Highest Number Previously Paid For" IN THIS SPACE is less than 3, enter "3."
The "Highest Number Previously Paid For" (Total or Independent) is the highest number found in the appropriate box in column 1.

FORM PTO-875
(Rev. 8/98)

Patent and Trademark Office, U.S. DEPARTMENT OF COMMERCE

CISCO EXHIBIT 1004
Page 324 of 345

UNITED STATES PATENT AND TRADEMARK OFFICE

UNITED STATES DEPARTMENT OF COMMERCE
United States Patent and Trademark Office
Address: COMMISSIONER FOR PATENTS
P.O. Box 1450
Alexandria, Virginia 22313-1450
www.uspto.gov

NOTICE OF ALLOWANCE AND FEE(S) DUE

29444 7590 02/10/2006

WINSTEAD SECHREST & MINICK P.C.
PO BOX 50784
DALLAS, TX 75201

EXAMINER	
NGUYEN, HANH N	
ART UNIT	PAPER NUMBER
2668	

DATE MAILED: 02/10/2006

APPLICATION NO.	FILING DATE	FIRST NAMED INVENTOR	ATTORNEY DOCKET NO.	CONFIRMATION NO.
09/775,018	02/01/2001	Eric G. Suder	16312-P005US	7490

TITLE OF INVENTION: QUALITY OF SERVICE IN A VOICE OVER IP TELEPHONE SYSTEM

APPLN. TYPE	SMALL ENTITY	ISSUE FEE	PUBLICATION FEE	TOTAL FEE(S) DUE	DATE DUE
nonprovisional	YES	$700	$0	$700	05/10/2006

THE APPLICATION IDENTIFIED ABOVE HAS BEEN EXAMINED AND IS ALLOWED FOR ISSUANCE AS A PATENT. PROSECUTION ON THE MERITS IS CLOSED. THIS NOTICE OF ALLOWANCE IS NOT A GRANT OF PATENT RIGHTS. THIS APPLICATION IS SUBJECT TO WITHDRAWAL FROM ISSUE AT THE INITIATIVE OF THE OFFICE OR UPON PETITION BY THE APPLICANT. SEE 37 CFR 1.313 AND MPEP 1308.

THE ISSUE FEE AND PUBLICATION FEE (IF REQUIRED) MUST BE PAID WITHIN THREE MONTHS FROM THE MAILING DATE OF THIS NOTICE OR THIS APPLICATION SHALL BE REGARDED AS ABANDONED. THIS STATUTORY PERIOD CANNOT BE EXTENDED. SEE 35 U.S.C. 151. THE ISSUE FEE DUE INDICATED ABOVE REFLECTS A CREDIT FOR ANY PREVIOUSLY PAID ISSUE FEE APPLIED IN THIS APPLICATION. THE PTOL-85B (OR AN EQUIVALENT) MUST BE RETURNED WITHIN THIS PERIOD EVEN IF NO FEE IS DUE OR THE APPLICATION WILL BE REGARDED AS ABANDONED.

HOW TO REPLY TO THIS NOTICE:

I. Review the SMALL ENTITY status shown above.

If the SMALL ENTITY is shown as YES, verify your current SMALL ENTITY status:

A. If the status is the same, pay the TOTAL FEE(S) DUE shown above.

B. If the status above is to be removed, check box 5b on Part B - Fee(s) Transmittal and pay the PUBLICATION FEE (if required) and twice the amount of the ISSUE FEE shown above, or

If the SMALL ENTITY is shown as NO:

A. Pay TOTAL FEE(S) DUE shown above, or

B. If applicant claimed SMALL ENTITY status before, or is now claiming SMALL ENTITY status, check box 5a on Part B - Fee(s) Transmittal and pay the PUBLICATION FEE (if required) and 1/2 the ISSUE FEE shown above.

II. PART B - FEE(S) TRANSMITTAL should be completed and returned to the United States Patent and Trademark Office (USPTO) with your ISSUE FEE and PUBLICATION FEE (if required). Even if the fee(s) have already been paid, Part B - Fee(s) Transmittal should be completed and returned. If you are charging the fee(s) to your deposit account, section "4b" of Part B - Fee(s) Transmittal should be completed and an extra copy of the form should be submitted.

III. All communications regarding this application must give the application number. Please direct all communications prior to issuance to Mail Stop ISSUE FEE unless advised to the contrary.

IMPORTANT REMINDER: Utility patents issuing on applications filed on or after Dec. 12, 1980 may require payment of maintenance fees. It is patentee's responsibility to ensure timely payment of maintenance fees when due.

PTOL-85 (Rev. 01/06) Approved for use through 04/30/2007.

PART B - FEE(S) TRANSMITTAL

Complete and send this form, together with applicable fee(s), to: Mail **Mail Stop ISSUE FEE**
Commissioner for Patents
P.O. Box 1450
Alexandria, Virginia 22313-1450
or Fax (571)-273-2885

INSTRUCTIONS: This form should be used for transmitting the ISSUE FEE and PUBLICATION FEE (if required). Blocks 1 through 5 should be completed where appropriate. All further correspondence including the Patent, advance orders and notification of maintenance fees will be mailed to the current correspondence address as indicated unless corrected below or directed otherwise in Block 1, by (a) specifying a new correspondence address; and/or (b) indicating a separate "FEE ADDRESS" for maintenance fee notifications.

CURRENT CORRESPONDENCE ADDRESS (Note: Use Block 1 for any change of address)

29444 7590 02/10/2006

WINSTEAD SECHREST & MINICK P.C.
PO BOX 50784
DALLAS, TX 75201

Note: A certificate of mailing can only be used for domestic mailings of the Fee(s) Transmittal. This certificate cannot be used for any other accompanying papers. Each additional paper, such as an assignment or formal drawing, must have its own certificate of mailing or transmission.

Certificate of Mailing or Transmission
I hereby certify that this Fee(s) Transmittal is being deposited with the United States Postal Service with sufficient postage for first class mail in an envelope addressed to the Mail Stop ISSUE FEE address above, or being facsimile transmitted to the USPTO (571) 273-2885, on the date indicated below.

(Depositor's name)
(Signature)
(Date)

APPLICATION NO.	FILING DATE	FIRST NAMED INVENTOR	ATTORNEY DOCKET NO.	CONFIRMATION NO.
09/775,018	02/01/2001	Eric G. Suder	16312-P005US	7490

TITLE OF INVENTION: QUALITY OF SERVICE IN A VOICE OVER IP TELEPHONE SYSTEM

APPLN. TYPE	SMALL ENTITY	ISSUE FEE	PUBLICATION FEE	TOTAL FEE(S) DUE	DATE DUE
nonprovisional	YES	$700	$0	$700	05/10/2006

EXAMINER	ART UNIT	CLASS-SUBCLASS
NGUYEN, HANH N	2668	370-225000

1. Change of correspondence address or indication of "Fee Address" (37 CFR 1.363).
☐ Change of correspondence address (or Change of Correspondence Address form PTO/SB/122) attached.
☐ "Fee Address" indication (or "Fee Address" Indication form PTO/SB/47; Rev 03-02 or more recent) attached. **Use of a Customer Number is required.**

2. For printing on the patent front page, list
(1) the names of up to 3 registered patent attorneys or agents OR, alternatively, 1 _____
(2) the name of a single firm (having as a member a registered attorney or agent) and the names of up to 2 registered patent attorneys or agents. If no name is listed, no name will be printed. 2 _____ 3 _____

3. ASSIGNEE NAME AND RESIDENCE DATA TO BE PRINTED ON THE PATENT (print or type)

PLEASE NOTE: Unless an assignee is identified below, no assignee data will appear on the patent. If an assignee is identified below, the document has been filed for recordation as set forth in 37 CFR 3.11. Completion of this form is NOT a substitute for filing an assignment.

(A) NAME OF ASSIGNEE (B) RESIDENCE: (CITY and STATE OR COUNTRY)

Please check the appropriate assignee category or categories (will not be printed on the patent) : ☐ Individual ☐ Corporation or other private group entity ☐ Government

4a. The following fee(s) are enclosed:
☐ Issue Fee
☐ Publication Fee (No small entity discount permitted)
☐ Advance Order - # of Copies _____

4b. Payment of Fee(s):
☐ A check in the amount of the fee(s) is enclosed.
☐ Payment by credit card. Form PTO-2038 is attached.
☐ The Director is hereby authorized by charge the required fee(s), or credit any overpayment, to Deposit Account Number _____ (enclose an extra copy of this form).

5. **Change in Entity Status** (from status indicated above)
☐ a. Applicant claims SMALL ENTITY status. See 37 CFR 1.27. ☐ b. Applicant is no longer claiming SMALL ENTITY status. See 37 CFR 1.27(g)(2).

The Director of the USPTO is requested to apply the Issue Fee and Publication Fee (if any) or to re-apply any previously paid issue fee to the application identified above. NOTE: The Issue Fee and Publication Fee (if required) will not be accepted from anyone other than the applicant; a registered attorney or agent; or the assignee or other party in interest as shown by the records of the United States Patent and Trademark Office.

Authorized Signature _____ Date _____

Typed or printed name _____ Registration No. _____

This collection of information is required by 37 CFR 1.311. The information is required to obtain or retain a benefit by the public which is to file (and by the USPTO to process) an application. Confidentiality is governed by 35 U.S.C. 122 and 37 CFR 1.14. This collection is estimated to take 12 minutes to complete, including gathering, preparing, and submitting the completed application form to the USPTO. Time will vary depending upon the individual case. Any comments on the amount of time you require to complete this form and/or suggestions for reducing this burden, should be sent to the Chief Information Officer, U.S. Patent and Trademark Office, U.S. Department of Commerce, P.O. Box 1450, Alexandria, Virginia 22313-1450. DO NOT SEND FEES OR COMPLETED FORMS TO THIS ADDRESS. SEND TO: Commissioner for Patents, P.O. Box 1450, Alexandria, Virginia 22313-1450.

Under the Paperwork Reduction Act of 1995, no persons are required to respond to a collection of information unless it displays a valid OMB control number.

UNITED STATES PATENT AND TRADEMARK OFFICE

UNITED STATES DEPARTMENT OF COMMERCE
United States Patent and Trademark Office
Address: COMMISSIONER FOR PATENTS
P.O. Box 1450
Alexandria, Virginia 22313-1450
www.uspto.gov

APPLICATION NO.	FILING DATE	FIRST NAMED INVENTOR	ATTORNEY DOCKET NO.	CONFIRMATION NO.
09/775,018	02/01/2001	Eric G. Suder	16312-P005US	7490

29444 7590 02/10/2006

WINSTEAD SECHREST & MINICK P.C.
PO BOX 50784
DALLAS, TX 75201

EXAMINER	
NGUYEN, HANH N	
ART UNIT	PAPER NUMBER
2668	

DATE MAILED: 02/10/2006

Determination of Patent Term Adjustment under 35 U.S.C. 154 (b)
(application filed on or after May 29, 2000)

The Patent Term Adjustment to date is 864 day(s). If the issue fee is paid on the date that is three months after the mailing date of this notice and the patent issues on the Tuesday before the date that is 28 weeks (six and a half months) after the mailing date of this notice, the Patent Term Adjustment will be 864 day(s).

If a Continued Prosecution Application (CPA) was filed in the above-identified application, the filing date that determines Patent Term Adjustment is the filing date of the most recent CPA.

Applicant will be able to obtain more detailed information by accessing the Patent Application Information Retrieval (PAIR) WEB site (http://pair.uspto.gov).

Any questions regarding the Patent Term Extension or Adjustment determination should be directed to the Office of Patent Legal Administration at (571)-272-7702. Questions relating to issue and publication fee payments should be directed to the Customer Service Center of the Office of Patent Publication at 1-(888)-786-0101 or (571)-272-4200.

PTOL-85 (Rev. 01/06) Approved for use through 04/30/2007.

Notice of Allowability	Application No.	Applicant(s)	
	09/775,018	SUDER ET AL.	
	Examiner	Art Unit	
	Hanh Nguyen	2668	

-- The MAILING DATE of this communication appears on the cover sheet with the correspondence address--

All claims being allowable, PROSECUTION ON THE MERITS IS (OR REMAINS) CLOSED in this application. If not included herewith (or previously mailed), a Notice of Allowance (PTOL-85) or other appropriate communication will be mailed in due course. **THIS NOTICE OF ALLOWABILITY IS NOT A GRANT OF PATENT RIGHTS.** This application is subject to withdrawal from issue at the initiative of the Office or upon petition by the applicant. See 37 CFR 1.313 and MPEP 1308.

1. ☒ This communication is responsive to *Amendment filed on 12/7/05*.

2. ☒ The allowed claim(s) is/are *Claims 8-20, 23-43, 45-56, 59-64, 66, 67, 69, 70 and 73-77 renumbered 1-23, 26, 24, 27, 25, 28-33, 36, 34, 37-46, 35 and 47-61 respectively*.

3. ☐ Acknowledgment is made of a claim for foreign priority under 35 U.S.C. § 119(a)-(d) or (f).
   a) ☐ All b) ☐ Some* c) ☐ None of the:
      1. ☐ Certified copies of the priority documents have been received.
      2. ☐ Certified copies of the priority documents have been received in Application No. _____ .
      3. ☐ Copies of the certified copies of the priority documents have been received in this national stage application from the International Bureau (PCT Rule 17.2(a)).

   * Certified copies not received: _____.

Applicant has THREE MONTHS FROM THE "MAILING DATE" of this communication to file a reply complying with the requirements noted below. Failure to timely comply will result in ABANDONMENT of this application.
THIS THREE-MONTH PERIOD IS NOT EXTENDABLE.

4. ☐ A SUBSTITUTE OATH OR DECLARATION must be submitted. Note the attached EXAMINER'S AMENDMENT or NOTICE OF INFORMAL PATENT APPLICATION (PTO-152) which gives reason(s) why the oath or declaration is deficient.

5. ☐ CORRECTED DRAWINGS (as "replacement sheets") must be submitted.
   (a) ☐ including changes required by the Notice of Draftsperson's Patent Drawing Review (PTO-948) attached
      1) ☐ hereto or 2) ☐ to Paper No./Mail Date _____.
   (b) ☐ including changes required by the attached Examiner's Amendment / Comment or in the Office action of Paper No./Mail Date _____.

   Identifying indicia such as the application number (see 37 CFR 1.84(c)) should be written on the drawings in the front (not the back) of each sheet. Replacement sheet(s) should be labeled as such in the header according to 37 CFR 1.121(d).

6. ☐ DEPOSIT OF and/or INFORMATION about the deposit of BIOLOGICAL MATERIAL must be submitted. Note the attached Examiner's comment regarding REQUIREMENT FOR THE DEPOSIT OF BIOLOGICAL MATERIAL.

Attachment(s)

1. ☐ Notice of References Cited (PTO-892)
2. ☐ Notice of Draftperson's Patent Drawing Review (PTO-948)
3. ☒ Information Disclosure Statements (PTO-1449 or PTO/SB/08), Paper No./Mail Date 4/9/01
4. ☐ Examiner's Comment Regarding Requirement for Deposit of Biological Material
5. ☐ Notice of Informal Patent Application (PTO-152)
6. ☐ Interview Summary (PTO-413), Paper No./Mail Date _____.
7. ☐ Examiner's Amendment/Comment
8. ☐ Examiner's Statement of Reasons for Allowance
9. ☐ Other _____.

HN guyen HANH NGUYEN
PRIMARY EXAMINER

4/9/01

In Place of FORM PTO-1449 (Modified)

LIST OF PATENTS AND PUBLICATIONS FOR APPLICANT'S INFORMATION DISCLOSURE STATEMENT

Serial No. 09/775,018
Applicant. Eric G. Suder et al
Filing Date· February 1, 2001
Group. ~~2661~~ 2668
Atty. Docket No.. 16312-P005US

Reference Designation

U.S. PATENT DOCUMENTS

Examiner Initial	Document Number	Date	Name	Class	Subclass	Filing Date if Appropriate
HN AAA	5,982,779	11/09/99	Krishnakumar et al.	370	447	
ABA						
ACA						
ADA						
AEA						
AFA						
AGA						
AHA						
AIA						
AJA						
AKA						

FOREIGN PATENT DOCUMENTS

Examiner Initial	Document Number	Date	Country	Class	Subclass	Translation Yes	Translation No
ALA							
AMA							
ANA							
AOA							
APA							

OTHER ART (Including Author, Title, Date, Pertinent Pages, Etc.)

Examiner Initial

HN ARA *Avaya Communication*, "Avaya IP Telephone," available via the Internet at www lucent com/enterprise/solutions/eclips/pdf/black_white_paper pdf, November 9, 2000

HN ASA *Avaya Communication*, "Quality of Service (QoS) considerations with 4600 Series IP Telephones," available via the Internet at www lucent com/enterprise/solutions/eclips/pdf/QuSwhite_paper pdf, January 29, 2000

~~HN~~ ATA

Examiner: HNguyen Date Considered: 2/8/06

EXAMINER· Initial if reference considered, whether or not citation is in conformance with MPEP 609, Draw line through citation if not in conformance and not considered. Include copy of this form with next communication to applicant.

:ODMA\PCDOCS\AUSTIN_1\162128\1
207 16312-Pu05US

PAGE 2/3 * RCVD AT 2/8/2006 2:49:40 PM [Eastern Standard Time] * SVR:USPTO-EFXRF-6/31 * DNIS:2733092 * CSID:+ * DURATION (mm-ss):01-40

Issue Classification	Application/Control No. 09/775,018	Applicant(s)/Patent under Reexamination SUDER ET AL.
	Examiner Hanh Nguyen	Art Unit 2668

ISSUE CLASSIFICATION

ORIGINAL		INTERNATIONAL CLASSIFICATION											
CLASS	SUBCLASS	CLAIMED					NON-CLAIMED						
370	493	H	04	L	12	/66					/		
CROSS REFERENCES		H	04	J	1	/02					/		
CLASS	SUBCLASS (ONE SUBCLASS PER BLOCK)												
370	352 496	H	04	J	1	/14					/		
379	93.29 93.09	H	04	M	11	/00					/		
						/					/		
						/					/		
						/					/		

(Assistant Examiner) (Date)

(Legal Instruments Examiner) 8/9/06 (Date)

Hanh Nguyen 2/8/06

(Primary Examiner) (Date)

HANH NGUYEN
PRIMARY EXAMINER

Total Claims Allowed: 61

O.G. Print Claim(s)	O.G. Print Fig.
1	1

☐ Claims renumbered in the same order as presented by applicant ☐ CPA ☐ T.D. ☐ R.1.47

Final	Original	Final	Original	Final	Original	Final	Original	Final	Original	Final	Original	Final	Original
	1	22	31	49	61		91		121		151		181
	2	23	32	50	62		92		122		152		182
	3	26	33	51	63		93		123		153		183
	4	24	34	52	64		94		124		154		184
	5	27	35		65		95		125		155		185
	6	25	36	53	66		96		126		156		186
	7	28	37	54	67		97		127		157		187
1	8	29	38		68		98		128		158		188
2	9	30	39	55	69		99		129		159		189
3	10	31	40	56	70		100		130		160		190
4	11	32	41		71		101		131		161		191
5	12	33	42		72		102		132		162		192
6	13	36	43	57	73		103		133		163		193
7	14		44	58	74		104		134		164		194
8	15	34	45	59	75		105		135		165		195
9	16	37	46	60	76		106		136		166		196
10	17	38	47	61	77		107		137		167		197
11	18	39	48		78		108		138		168		198
12	19	40	49		79		109		139		169		199
13	20	41	50		80		110		140		170		200
	21	42	51		81		111		141		171		201
	22	43	52		82		112		142		172		202
14	23	44	53		83		113		143		173		203
15	24	45	54		84		114		144		174		204
16	25	46	55		85		115		145		175		205
17	26	35	56		86		116		146		176		206
18	27		57		87		117		147		177		207
19	28		58		88		118		148		178		208
20	29	47	59		89		119		149		179		209
21	30	48	60		90		120		150		180		210

Index of Claims

Application/Control No.	Applicant(s)/Patent under Reexamination
09/775,018	SUDER ET AL.
Examiner	**Art Unit**
Hanh Nguyen	2668

√	Rejected	–	(Through numeral) Cancelled	N	Non-Elected	A	Appeal
=	Allowed	+	Restricted	I	Interference	O	Objected

Claim		Date
Final	Original	2/8/06
	1	
	2	
	3	
	4	
	5	
	6	
	7	
1	8	
2	9	
3	10	
4	11	
5	12	
6	13	
7	14	
8	15	
9	16	
10	17	
11	18	
12	19	
13	20	
	21	
	22	
14	23	
15	24	
16	25	
17	26	
18	27	
19	28	
20	29	
21	30	
22	31	
23	32	
26	33	
24	34	
27	35	
25	36	
28	37	
29	38	
30	39	
31	40	
32	41	
33	42	
36	43	
	44	
34	45	
37	46	
38	47	
39	48	
40	49	
41	50	

Claim		Date
Final	Original	2/8/06
42	51	
43	52	
44	53	
45	54	
46	55	
35	56	
	57	
	58	
47	59	
48	60	
49	61	
50	62	
51	63	
52	64	
	65	
53	66	
54	67	
	68	
55	69	
56	70	
	71	
	72	
57	73	
58	74	
59	75	
60	76	
61	77	
	78	
	79	
	80	
	81	
	82	
	83	
	84	
	85	
	86	
	87	
	88	
	89	
	90	
	91	
	92	
	93	
	94	
	95	
	96	
	97	
	98	
	99	
	100	

Claim		Date
Final	Original	
	101	
	102	
	103	
	104	
	105	
	106	
	107	
	108	
	109	
	110	
	111	
	112	
	113	
	114	
	115	
	116	
	117	
	118	
	119	
	120	
	121	
	122	
	123	
	124	
	125	
	126	
	127	
	128	
	129	
	130	
	131	
	132	
	133	
	134	
	135	
	136	
	137	
	138	
	139	
	140	
	141	
	142	
	143	
	144	
	145	
	146	
	147	
	148	
	149	
	150	

UNITED STATES PATENT AND TRADEMARK OFFICE

COMMISSIONER FOR PATENTS
UNITED STATES PATENT AND TRADEMARK OFFICE
WASHINGTON, D.C. 20231
www.uspto.gov

Bib Data Sheet

CONFIRMATION NO. 7490

SERIAL NUMBER	FILING DATE	CLASS	GROUP ART UNIT	ATTORNEY DOCKET NO.
09/775,018	02/01/2001 RULE	370	~~2661~~ 2668	16312-P005US

APPLICANTS

Eric G. Suder, Plano, TX;
Harold E.A. Hansen II, Plano, TX;

** CONTINUING DATA **********

** FOREIGN APPLICATIONS **********

IF REQUIRED, FOREIGN FILING LICENSE GRANTED ** 03/09/2001

** SMALL ENTITY **

		STATE OR COUNTRY	SHEETS DRAWING	TOTAL CLAIMS	INDEPENDENT CLAIMS
Foreign Priority claimed	☐ yes ☑ no	TX	13	~~77~~ 61	5
35 USC 119 (a-d) conditions met	☐ yes ☑ no ☐ Met after Allowance				
Verified and Acknowledged	Examiner's Signature / Initials				

ADDRESS

Kelly K. Kordzik
Suite 800
100 Congress Avenue
Austin , TX 78701

TITLE

Quality of service in a voice over IP telephone system

FILING FEE RECEIVED	FEES: Authority has been given in Paper	
1013	No. _____ to charge/credit DEPOSIT ACCOUNT No. _____ for following:	☐ All Fees ☐ 1.16 Fees (Filing) ☐ 1.17 Fees (Processing Ext. of time) ☐ 1.18 Fees (Issue) ☐ Other _____ ☐ Credit

Search Notes

Application/Control No.	Applicant(s)/Patent under Reexamination	
09/775,018	SUDER ET AL.	
Examiner	**Art Unit**	
Hanh Nguyen	2668	

SEARCHED			
Class	Subclass	Date	Examiner
370	352	2/8/2006	HN
	389		
	401		
	493		
	494		
	495		
	535		
	395.42		
	395.21		
	433		
	443		
	444		
	445		

INTERFERENCE SEARCHED			
Class	Subclass	Date	Examiner
370	**493**	2/8/2006	**HN**
	352		
379	93.09		

SEARCH NOTES (INCLUDING SEARCH STRATEGY)		
	DATE	EXMR
east	2/8/2006	HN

OIPE
MAY 08 2006
PATENT & TRADEMARK OFFICE

PART B - FEE(S) TRANSMITTAL

Complete and send this form, together with applicable fee(s), to: Mail **Mail Stop ISSUE FEE**
Commissioner for Patents
P.O. Box 1450
Alexandria, Virginia 22313-1450
or Fax (571)-273-2885

INSTRUCTIONS: This form should be used for transmitting the ISSUE FEE and PUBLICATION FEE (if required). Blocks 1 through 5 should be completed where appropriate. All further correspondence including the Patent, advance orders and notification of maintenance fees will be mailed to the current correspondence address as indicated unless corrected below or directed otherwise in Block 1, by (a) specifying a new correspondence address; and/or (b) indicating a separate "FEE ADDRESS" for maintenance fee notifications.

CURRENT CORRESPONDENCE ADDRESS (Note: Use Block 1 for any change of address)

29444 7590 02/10/2006

WINSTEAD SECHREST & MINICK P.C.
PO BOX 50784
DALLAS, TX 75201

Note: A certificate of mailing can only be used for domestic mailings of the Fee(s) Transmittal. This certificate cannot be used for any other accompanying papers. Each additional paper, such as an assignment or formal drawing, must have its own certificate of mailing or transmission.

Certificate of Mailing or Transmission
I hereby certify that this Fee(s) Transmittal is being deposited with the United States Postal Service with sufficient postage for first class mail in an envelope addressed to the Mail Stop ISSUE FEE address above, or being facsimile transmitted to the USPTO (571) 273-2885, on the date indicated below.

Toni Stanley	(Depositor's name)
Toni Stanley	(Signature)
5-3-06	(Date)

APPLICATION NO.	FILING DATE	FIRST NAMED INVENTOR	ATTORNEY DOCKET NO.	CONFIRMATION NO.
09/775,018	02/01/2001	Eric G. Suder	16312-P005US	7490

TITLE OF INVENTION: QUALITY OF SERVICE IN A VOICE OVER IP TELEPHONE SYSTEM

05/09/2006 CNGUYEN1 00000014 09775018
01 FC:2501 700.00 OP

APPLN. TYPE	SMALL ENTITY	ISSUE FEE	PUBLICATION FEE	TOTAL FEE(S) DUE	DATE DUE
nonprovisional	YES	$700	$0	$700	05/10/2006

EXAMINER	ART UNIT	CLASS-SUBCLASS
NGUYEN, HANH N	2668	370-225000

1. Change of correspondence address or indication of "Fee Address" (37 CFR 1.363).
☐ Change of correspondence address (or Change of Correspondence Address form PTO/SB/122) attached.
☐ "Fee Address" indication (or "Fee Address" Indication form PTO/SB/47; Rev 03-02 or more recent) attached. **Use of a Customer Number is required.**

2. For printing on the patent front page, list
(1) the names of up to 3 registered patent attorneys or agents OR, alternatively,
(2) the name of a single firm (having as a member a registered attorney or agent) and the names of up to 2 registered patent attorneys or agents. If no name is listed, no name will be printed.

1 Kelly K. Kordzik
2 Winstead Sechrest & Minick P.C.
3

3. ASSIGNEE NAME AND RESIDENCE DATA TO BE PRINTED ON THE PATENT (print or type)

PLEASE NOTE: Unless an assignee is identified below, no assignee data will appear on the patent. If an assignee is identified below, the document has been filed for recordation as set forth in 37 CFR 3.11. Completion of this form is NOT a substitute for filing an assignment.

(A) NAME OF ASSIGNEE: Estech Systems, Inc.

(B) RESIDENCE: (CITY and STATE OR COUNTRY): Plano, TX

Please check the appropriate assignee category or categories (will not be printed on the patent) : ☐ Individual ☒ Corporation or other private group entity ☐ Government

4a. The following fee(s) are enclosed:
☒ Issue Fee
☐ Publication Fee (No small entity discount permitted)
☐ Advance Order - # of Copies _____

4b. Payment of Fee(s):
☒ A check in the amount of the fee(s) is enclosed.
☐ Payment by credit card. Form PTO-2038 is attached.
☒ The Director is hereby authorized by charge the required fee(s), or credit any overpayment, to Deposit Account Number _____ (enclose an extra copy of this form).

5. **Change in Entity Status** (from status indicated above)
☐ a. Applicant claims SMALL ENTITY status. See 37 CFR 1.27.
☐ b. Applicant is no longer claiming SMALL ENTITY status. See 37 CFR 1.27(g)(2).

The Director of the USPTO is requested to apply the Issue Fee and Publication Fee (if any) or to re-apply any previously paid issue fee to the application identified above. NOTE: The Issue Fee and Publication Fee (if required) will not be accepted from anyone other than the applicant; a registered attorney or agent; or the assignee or other party in interest as shown by the records of the United States Patent and Trademark Office.

Authorized Signature _____ Date 5-3-06

Typed or printed name Kelly K. Kordzik Registration No. 36,571

This collection of information is required by 37 CFR 1.311. The information is required to obtain or retain a benefit by the public which is to file (and by the USPTO to process) an application. Confidentiality is governed by 35 U.S.C. 122 and 37 CFR 1.14. This collection is estimated to take 12 minutes to complete, including gathering, preparing, and submitting the completed application form to the USPTO. Time will vary depending upon the individual case. Any comments on the amount of time you require to complete this form and/or suggestions for reducing this burden, should be sent to the Chief Information Officer, U.S. Patent and Trademark Office, U.S. Department of Commerce, P.O. Box 1450, Alexandria, Virginia 22313-1450. DO NOT SEND FEES OR COMPLETED FORMS TO THIS ADDRESS. SEND TO: Commissioner for Patents, P.O. Box 1450, Alexandria, Virginia 22313-1450.

Under the Paperwork Reduction Act of 1995, no persons are required to respond to a collection of information unless it displays a valid OMB control number.

UNITED STATES PATENT AND TRADEMARK OFFICE

UNITED STATES DEPARTMENT OF COMMERCE
United States Patent and Trademark Office
Address: COMMISSIONER FOR PATENTS
P.O. Box 1450
Alexandria, Virginia 22313-1450
www.uspto.gov

APPLICATION NUMBER	PATENT NUMBER	GROUP ART UNIT	FILE WRAPPER LOCATION
09/775,018		2616	7420

Correspondence Address / Fee Address Change

The following fields have been set to Customer Number 29444 on 12/29/2005

- Correspondence Address
- Maintenance Fee Address

The address of record for Customer Number 29444 is:
WINSTEAD SECHREST & MINICK P.C.
PO BOX 50784
DALLAS,TX 75201

Electronic Acknowledgement Receipt	
EFS ID:	4213663
Application Number:	09775018
International Application Number:	
Confirmation Number:	7490
Title of Invention:	QUALITY OF SERVICE IN A VOICE OVER IP TELEPHONE SYSTEM
First Named Inventor/Applicant Name:	Eric G. Suder
Customer Number:	29444
Filer:	Kelly K. Kordzik/Kimberly Brown
Filer Authorized By:	Kelly K. Kordzik
Attorney Docket Number:	16312-P005US
Receipt Date:	31-OCT-2008
Filing Date:	01-FEB-2001
Time Stamp:	14:34:00
Application Type:	Utility under 35 USC 111(a)

Payment information:

Submitted with Payment	no

File Listing:

Document Number	Document Description	File Name	File Size(Bytes)/ Message Digest	Multi Part /.zip	Pages (if appl.)
1	Change of Address	21618-0005001_chgaddress.pdf	194751 871dded0ff4f4748bca9bba1a063a7dddceb5f4c	no	1

Warnings:
Information:

Total Files Size (in bytes):	194751

This Acknowledgement Receipt evidences receipt on the noted date by the USPTO of the indicated documents, characterized by the applicant, and including page counts, where applicable. It serves as evidence of receipt similar to a Post Card, as described in MPEP 503.

New Applications Under 35 U.S.C. 111
If a new application is being filed and the application includes the necessary components for a filing date (see 37 CFR 1.53(b)-(d) and MPEP 506), a Filing Receipt (37 CFR 1.54) will be issued in due course and the date shown on this Acknowledgement Receipt will establish the filing date of the application.

National Stage of an International Application under 35 U.S.C. 371
If a timely submission to enter the national stage of an international application is compliant with the conditions of 35 U.S.C. 371 and other applicable requirements a Form PCT/DO/EO/903 indicating acceptance of the application as a national stage submission under 35 U.S.C. 371 will be issued in addition to the Filing Receipt, in due course.

New International Application Filed with the USPTO as a Receiving Office
If a new international application is being filed and the international application includes the necessary components for an international filing date (see PCT Article 11 and MPEP 1810), a Notification of the International Application Number and of the International Filing Date (Form PCT/RO/105) will be issued in due course, subject to prescriptions concerning national security, and the date shown on this Acknowledgement Receipt will establish the international filing date of the application.

CHANGE OF CORRESPONDENCE ADDRESS
Patent

Address to:
Commissioner for Patents
P.O. Box 1450
Alexandria, VA 22313-1450

Patent Number	7,068,684
Issue Date	6/27/2006
Application Number	09/775,018
Filing Date	February 1, 2001
First Named Inventor	Suder; et al.
Attorney Docket Number	21618-0005001
Confirmation Number	7490

Please change the Correspondence Address for the above-identified application to:

☒ The address associated with Customer Number: **26201**

OR

☐ **Firm *or* Individual Name**

Address

City **State** **Zip**

Country

Telephone **Email**

This form cannot be used to change the data associated with a Customer Number. To change the data associated with an existing Customer Number use "Request for Customer Number Data Change" (PTO/SB/124).

This form will not affect any "fee address" provided for the above-identified patent. To change a "fee address" use the "Fee Address Indication Form" (PTO/SB/47).

I am the :

☐ Patentee.

☐ Assignee of record of the entire interest. See CFR 3.71. Statement under 37 CFR 3.73(b) is enclosed.

☒ Attorney or agent of record. Registration Number 36,571

Signature

Typed or Printed Name Kelly K. Kordzik

Date 10/28/2008 Telephone (512) 472-5070

NOTE: Signatures of all the inventors or assignees of record of the entire interest or their representative(s) are required. Submit multiple forms if more than one signature is required, see below*.

☒ *Total of 1 forms are submitted.

11059159.doc

AO 120 (Rev. 08/10)

TO:	REPORT ON THE FILING OR DETERMINATION OF AN ACTION REGARDING A PATENT OR TRADEMARK
Mail Stop 8 Director of the U.S. Patent and Trademark Office P.O. Box 1450 Alexandria, VA 22313-1450	

In Compliance with 35 U.S.C. § 290 and/or 15 U.S.C. § 1116 you are hereby advised that a court action has been filed in the U.S. District Court EASTERN DISTRICT OF TEXAS on the following

☐ Trademarks or ☑ Patents. (☐ the patent action involves 35 U.S.C. § 292.):

DOCKET NO.	DATE FILED	U.S. DISTRICT COURT
	4/28/2020	EASTERN DISTRICT OF TEXAS

PLAINTIFF	DEFENDANT
ESTECH SYSTEMS, INC.	WELLS FARGO & COMPANY and WELLS FARGO BANK, N.A.

	PATENT OR TRADEMARK NO.	DATE OF PATENT OR TRADEMARK	HOLDER OF PATENT OR TRADEMARK
1	8,391,298	3/5/2013	ESTECH SYSTEMS, INC.
2	7,068,684	6/27/2006	ESTECH SYSTEMS, INC.
3	6,067,349	5/23/2000	ESTECH SYSTEMS, INC.
4	7,123,699	10/17/2006	ESTECH SYSTEMS, INC.
5			

In the above—entitled case, the following patent(s)/ trademark(s) have been included:

DATE INCLUDED	INCLUDED BY ☐ Amendment ☐ Answer ☐ Cross Bill ☐ Other Pleading	
PATENT OR TRADEMARK NO.	DATE OF PATENT OR TRADEMARK	HOLDER OF PATENT OR TRADEMARK
1		
2		
3		
4		
5		

In the above—entitled case, the following decision has been rendered or judgement issued:

DECISION/JUDGEMENT

CLERK	(BY) DEPUTY CLERK	DATE

Copy 1—Upon initiation of action, mail this copy to Director Copy 3—Upon termination of action, mail this copy to Director
Copy 2—Upon filing document adding patent(s), mail this copy to Director Copy 4—Case file copy

AO 120 (Rev. 08/10)

TO:	REPORT ON THE FILING OR DETERMINATION OF AN ACTION REGARDING A PATENT OR TRADEMARK
Mail Stop 8 Director of the U.S. Patent and Trademark Office P.O. Box 1450 Alexandria, VA 22313-1450	

In Compliance with 35 U.S.C. § 290 and/or 15 U.S.C. § 1116 you are hereby advised that a court action has been filed in the U.S. District Court EASTERN DISTRICT OF TEXAS on the following

☐ Trademarks or ☑ Patents. (☐ the patent action involves 35 U.S.C. § 292.):

DOCKET NO.	DATE FILED	U.S. DISTRICT COURT
	4/24/2020	EASTERN DISTRICT OF TEXAS

PLAINTIFF	DEFENDANT
ESTECH SYSTEMS, INC.	PLAINSCAPITAL BANK

	PATENT OR TRADEMARK NO.	DATE OF PATENT OR TRADEMARK	HOLDER OF PATENT OR TRADEMARK
1	8,391,298	3/5/2013	Estech Systems, Inc.
2	7,068,684	6/27/2006	Estech Systems, Inc.
3	7,123,699	10/17/2006	Estech Systems, Inc.
4			
5			

In the above—entitled case, the following patent(s)/ trademark(s) have been included:

DATE INCLUDED	INCLUDED BY ☐ Amendment ☐ Answer ☐ Cross Bill ☐ Other Pleading	
PATENT OR TRADEMARK NO.	DATE OF PATENT OR TRADEMARK	HOLDER OF PATENT OR TRADEMARK
1		
2		
3		
4		
5		

In the above—entitled case, the following decision has been rendered or judgement issued:

DECISION/JUDGEMENT

CLERK	(BY) DEPUTY CLERK	DATE

Copy 1—Upon initiation of action, mail this copy to Director Copy 3—Upon termination of action, mail this copy to Director
Copy 2—Upon filing document adding patent(s), mail this copy to Director Copy 4—Case file copy

AO 120 (Rev. 08/10)

TO:	REPORT ON THE FILING OR DETERMINATION OF AN ACTION REGARDING A PATENT OR TRADEMARK
Mail Stop 8 Director of the U.S. Patent and Trademark Office P.O. Box 1450 Alexandria, VA 22313-1450	

In Compliance with 35 U.S.C. § 290 and/or 15 U.S.C. § 1116 you are hereby advised that a court action has been filed in the U.S. District Court EASTERN DISTRICT OF TEXAS on the following

☐ Trademarks or ☑ Patents. (☐ the patent action involves 35 U.S.C. § 292.):

DOCKET NO.	DATE FILED	U.S. DISTRICT COURT
	4/24/2020	EASTERN DISTRICT OF TEXAS

PLAINTIFF	DEFENDANT
ESTECH SYSTEMS, INC.	TARGET CORPORATION

	PATENT OR TRADEMARK NO.	DATE OF PATENT OR TRADEMARK	HOLDER OF PATENT OR TRADEMARK
1	8,391,298	3/5/2013	Estech Systems, Inc.
2	7,068,684	6/27/2006	Estech Systems, Inc.
3	7,123,699	10/17/2006	Estech Systems, Inc.
4	6,067,349	5/23/2000	Estech Systems, Inc.
5			

In the above—entitled case, the following patent(s)/ trademark(s) have been included:

DATE INCLUDED	INCLUDED BY ☐ Amendment ☐ Answer ☐ Cross Bill ☐ Other Pleading	
PATENT OR TRADEMARK NO.	DATE OF PATENT OR TRADEMARK	HOLDER OF PATENT OR TRADEMARK
1		
2		
3		
4		
5		

In the above—entitled case, the following decision has been rendered or judgement issued:

DECISION/JUDGEMENT

CLERK	(BY) DEPUTY CLERK	DATE

Copy 1—Upon initiation of action, mail this copy to Director Copy 3—Upon termination of action, mail this copy to Director
Copy 2—Upon filing document adding patent(s), mail this copy to Director Copy 4—Case file copy

AO 120 (Rev. 08/10)

TO:	REPORT ON THE FILING OR DETERMINATION OF AN ACTION REGARDING A PATENT OR TRADEMARK
Mail Stop 8 **Director of the U.S. Patent and Trademark Office** **P.O. Box 1450** **Alexandria, VA 22313-1450**	

In Compliance with 35 U.S.C. § 290 and/or 15 U.S.C. § 1116 you are hereby advised that a court action has been filed in the U.S. District Court EASTERN DISTRICT OF TEXAS on the following

☐ Trademarks or ☑ Patents. (☐ the patent action involves 35 U.S.C. § 292.):

DOCKET NO.	DATE FILED	U.S. DISTRICT COURT
	4/24/2020	EASTERN DISTRICT OF TEXAS

PLAINTIFF	DEFENDANT
ESTECH SYSTEMS, INC.	REGUS INTERNATIONAL LTD.

	PATENT OR TRADEMARK NO.	DATE OF PATENT OR TRADEMARK	HOLDER OF PATENT OR TRADEMARK
1	8,391,298	3/5/2013	Estech Systems, Inc.
2	7,068,684	6/27/2006	Estech Systems, Inc.
3	7,123,699	10/17/2006	Estech Systems, Inc.
4	6,067,349	5/23/2000	Estech Systems, Inc.
5			

In the above—entitled case, the following patent(s)/ trademark(s) have been included:

DATE INCLUDED	INCLUDED BY ☐ Amendment ☐ Answer ☐ Cross Bill ☐ Other Pleading	
PATENT OR TRADEMARK NO.	DATE OF PATENT OR TRADEMARK	HOLDER OF PATENT OR TRADEMARK
1		
2		
3		
4		
5		

In the above—entitled case, the following decision has been rendered or judgement issued:

DECISION/JUDGEMENT

CLERK	(BY) DEPUTY CLERK	DATE

Copy 1—Upon initiation of action, mail this copy to Director **Copy 3—Upon termination of action, mail this copy to Director**
Copy 2—Upon filing document adding patent(s), mail this copy to Director **Copy 4—Case file copy**

AO 120 (Rev. 08/10)

TO:	REPORT ON THE FILING OR DETERMINATION OF AN ACTION REGARDING A PATENT OR TRADEMARK
Mail Stop 8 **Director of the U.S. Patent and Trademark Office** **P.O. Box 1450** **Alexandria, VA 22313-1450**	

In Compliance with 35 U.S.C. § 290 and/or 15 U.S.C. § 1116 you are hereby advised that a court action has been filed in the U.S. District Court EASTERN DISTRICT OF TEXAS on the following

☐ Trademarks or ☑ Patents. (☐ the patent action involves 35 U.S.C. § 292.):

DOCKET NO.	DATE FILED	U.S. DISTRICT COURT
	4/27/2020	EASTERN DISTRICT OF TEXAS

PLAINTIFF	DEFENDANT
ESTECH SYSTEMS, INC.	BOKF, NATIONAL ASSOCIATION

	PATENT OR TRADEMARK NO.	DATE OF PATENT OR TRADEMARK	HOLDER OF PATENT OR TRADEMARK
1	8,391,298	3/5/2013	ESTECH SYSTEMS, INC.
2	7,068,684	6/27/2006	ESTECH SYSTEMS, INC.
3	7,123,699	10/17/2006	ESTECH SYSTEMS, INC.
4			
5			

In the above—entitled case, the following patent(s)/ trademark(s) have been included:

DATE INCLUDED	INCLUDED BY ☐ Amendment ☐ Answer ☐ Cross Bill ☐ Other Pleading	
PATENT OR TRADEMARK NO.	DATE OF PATENT OR TRADEMARK	HOLDER OF PATENT OR TRADEMARK
1		
2		
3		
4		
5		

In the above—entitled case, the following decision has been rendered or judgement issued:

DECISION/JUDGEMENT

CLERK	(BY) DEPUTY CLERK	DATE

Copy 1—Upon initiation of action, mail this copy to Director **Copy 3—Upon termination of action, mail this copy to Director**
Copy 2—Upon filing document adding patent(s), mail this copy to Director **Copy 4—Case file copy**

AO 120 (Rev. 08/10)

TO:	REPORT ON THE FILING OR DETERMINATION OF AN ACTION REGARDING A PATENT OR TRADEMARK
Mail Stop 8 Director of the U.S. Patent and Trademark Office P.O. Box 1450 Alexandria, VA 22313-1450	

In Compliance with 35 U.S.C. § 290 and/or 15 U.S.C. § 1116 you are hereby advised that a court action has been filed in the U.S. District Court EASTERN DISTRICT OF TEXAS on the following

☐ Trademarks or ☑ Patents. (☐ the patent action involves 35 U.S.C. § 292.):

DOCKET NO.	DATE FILED	U.S. DISTRICT COURT
	4/27/2020	EASTERN DISTRICT OF TEXAS

PLAINTIFF	DEFENDANT
ESTECH SYSTEMS, INC.	BBVA USA BANCSHARES, INC.

	PATENT OR TRADEMARK NO.	DATE OF PATENT OR TRADEMARK	HOLDER OF PATENT OR TRADEMARK
1	8,391,298	3/5/2013	ESTECH SYSTEMS, INC.
2	7,068,684	6/27/2006	ESTECH SYSTEMS, INC.
3	7,123,699	10/17/2006	ESTECH SYSTEMS, INC.
4			
5			

In the above—entitled case, the following patent(s)/ trademark(s) have been included:

DATE INCLUDED	INCLUDED BY ☐ Amendment ☐ Answer ☐ Cross Bill ☐ Other Pleading	
PATENT OR TRADEMARK NO.	DATE OF PATENT OR TRADEMARK	HOLDER OF PATENT OR TRADEMARK
1		
2		
3		
4		
5		

In the above—entitled case, the following decision has been rendered or judgement issued:

DECISION/JUDGEMENT

CLERK	(BY) DEPUTY CLERK	DATE

Copy 1—Upon initiation of action, mail this copy to Director Copy 3—Upon termination of action, mail this copy to Director
Copy 2—Upon filing document adding patent(s), mail this copy to Director Copy 4—Case file copy

AO 120 (Rev. 08/10)

TO:	REPORT ON THE FILING OR DETERMINATION OF AN ACTION REGARDING A PATENT OR TRADEMARK
Mail Stop 8 Director of the U.S. Patent and Trademark Office P.O. Box 1450 Alexandria, VA 22313-1450	

In Compliance with 35 U.S.C. § 290 and/or 15 U.S.C. § 1116 you are hereby advised that a court action has been filed in the U.S. District Court Western District of Texas on the following

☐ Trademarks or ☑ Patents. (☐ the patent action involves 35 U.S.C. § 292.):

DOCKET NO.	DATE FILED	U.S. DISTRICT COURT
	4/24/2020	Western District of Texas

PLAINTIFF	DEFENDANT
ESTECH SYSTEMS, INC.	OPEN MORTGAGE, LLC

	PATENT OR TRADEMARK NO.	DATE OF PATENT OR TRADEMARK	HOLDER OF PATENT OR TRADEMARK
1	8,391,298	3/5/2013	ESTECH SYSTEMS, INC.
2	7,068,684	6/27/2006	ESTECH SYSTEMS, INC.
3	6,067,349	5/23/2000	ETECH SYSTEMS, INC.
4	7,123,699	10/17/2006	ESTECH SYSTEMS, INC.
5			

In the above—entitled case, the following patent(s)/ trademark(s) have been included:

DATE INCLUDED	INCLUDED BY ☐ Amendment ☐ Answer ☐ Cross Bill ☐ Other Pleading	
PATENT OR TRADEMARK NO.	DATE OF PATENT OR TRADEMARK	HOLDER OF PATENT OR TRADEMARK
1		
2		
3		
4		
5		

In the above—entitled case, the following decision has been rendered or judgement issued:

DECISION/JUDGEMENT

CLERK	(BY) DEPUTY CLERK	DATE

Copy 1—Upon initiation of action, mail this copy to Director Copy 3—Upon termination of action, mail this copy to Director
Copy 2—Upon filing document adding patent(s), mail this copy to Director Copy 4—Case file copy