UNITED STATES PATENT AND TRADEMARK OFFICE

UNITED STATES DEPARTMENT OF COMMERCE
United States Patent and Trademark Office
Address: COMMISSIONER FOR PATENTS
P.O. Box 1450
Alexandria, Virginia 22313-1450
www.uspto.gov

APPLICATION NO.	ISSUE DATE	PATENT NO.	ATTORNEY DOCKET NO.	CONFIRMATION NO.
13/310,755	08/19/2014	8812993	NEONODE.P039	1066

75660 7590 07/30/2014

Soquel Group, LLC
P.O. Box 691
Soquel, CA 95073

ISSUE NOTIFICATION

The projected patent number and issue date are specified above.

Determination of Patent Term Adjustment under 35 U.S.C. 154 (b)
(application filed on or after May 29, 2000)

The Patent Term Adjustment is 0 day(s). Any patent to issue from the above-identified application will include an indication of the adjustment on the front page.

If a Continued Prosecution Application (CPA) was filed in the above-identified application, the filing date that determines Patent Term Adjustment is the filing date of the most recent CPA.

Applicant will be able to obtain more detailed information by accessing the Patent Application Information Retrieval (PAIR) WEB site (http://pair.uspto.gov).

Any questions regarding the Patent Term Extension or Adjustment determination should be directed to the Office of Patent Legal Administration at (571)-272-7702. Questions relating to issue and publication fee payments should be directed to the Application Assistance Unit (AAU) of the Office of Data Management (ODM) at (571)-272-4200.

APPLICANT(s) (Please see PAIR WEB site http://pair.uspto.gov for additional applicants):

Magnus Goertz, Lidingo, SWEDEN;

The United States represents the largest, most dynamic marketplace in the world and is an unparalleled location for business investment, innovation, and commercialization of new technologies. The USA offers tremendous resources and advantages for those who invest and manufacture goods here. Through SelectUSA, our nation works to encourage and facilitate business investment. To learn more about why the USA is the best country in the world to develop technology, manufacture products, and grow your business, visit SelectUSA.gov.

INFORMATION DISCLOSURE STATEMENT BY APPLICANT (Not for submission under 37 CFR 1.99)		
	Application Number	13310755
	Filing Date	2011-12-04
	First Named Inventor	Magnus Goertz
	Art Unit	2171
	Examiner Name	Ryan F. Pitaro
	Attorney Docket Number	NEONODE.P039

/R.P./	9	6690387	B2	2004-02-10	Zimmerman et al.	
/R.P./	10	6707449	B2	2004-03-16	Hinckley et al.	
/R.P./	11	6788292	B1	2004-09-07	Nako et al.	
/R.P./	12	6874683	B1	2005-04-05	Keronen et al.	
/R.P./	13	7441196	B2	2008-10-21	Gottfurcht et al.	
/R.P./	14	8120625	B2	2012-02-21	Hinckley	

If you wish to add additional U.S. Patent citation information please click the Add button. Add

U.S.PATENT APPLICATION PUBLICATIONS Remove

Examiner Initial*	Cite No	Publication Number	Kind Code[1]	Publication Date	Name of Patentee or Applicant of cited Document	Pages,Columns,Lines where Relevant Passages or Relevant Figures Appear
/R.P./	1	20010030641	A1	2001-10-18	Suzuki	
/R.P./	2	20010043189	A1	2001-11-22	Brisebois et al.	
/R.P./	3	~~20030066699~~	A1	2002-05-23	D'Agostini	20020060699

Change(s) applied to document,

/D.D./

7/8/2014

UNITED STATES PATENT AND TRADEMARK OFFICE

UNITED STATES DEPARTMENT OF COMMERCE
United States Patent and Trademark Office
Address: COMMISSIONER FOR PATENTS
P.O. Box 1450
Alexandria, Virginia 22313-1450
www.uspto.gov

APPLICATION NO.	FILING DATE	FIRST NAMED INVENTOR	ATTORNEY DOCKET NO.	CONFIRMATION NO.
13/310,755	12/04/2011	Magnus Goertz	NEONODE.P039	1066

75660 7590 07/23/2014

Soquel Group, LLC
P.O. Box 691
Soquel, CA 95073

EXAMINER	
PITARO, RYAN F	
ART UNIT	PAPER NUMBER
2171	

NOTIFICATION DATE	DELIVERY MODE
07/23/2014	ELECTRONIC

Please find below and/or attached an Office communication concerning this application or proceeding.

The time period for reply, if any, is set in the attached communication.

Notice of the Office communication was sent electronically on above-indicated "Notification Date" to the following e-mail address(es):

pto@soquelgroup.com
rblumberg@soquelgroup.com
mberger@soquelgroup.com

Response to Rule 312 Communication	Application No.	Applicant(s)
	13/310,755	MAGNUS G.
	Examiner	Art Unit

-- The MAILING DATE of this communication appears on the cover sheet with the correspondence address --

1. ☒ The amendment filed on *21 July 2014* under 37 CFR 1.312 has been considered, and has been:

a) ☒ entered.

b) ☐ entered as directed to matters of form not affecting the scope of the invention.

c) ☐ disapproved because the amendment was filed after the payment of the issue fee.
Any amendment filed after the date the issue fee is paid must be accompanied by a petition under 37 CFR 1.313(c)(1) and the required fee to withdraw the application from issue.

d) ☐ disapproved. See explanation below.

e) ☐ entered in part. See explanation below.

B.Crittenden

Publishing Division

UNITED STATES PATENT AND TRADEMARK OFFICE

UNITED STATES DEPARTMENT OF COMMERCE
United States Patent and Trademark Office
Address: COMMISSIONER FOR PATENTS
P.O. Box 1450
Alexandria, Virginia 22313-1450
www.uspto.gov

APPLICATION NO.	FILING DATE	FIRST NAMED INVENTOR	ATTORNEY DOCKET NO.	CONFIRMATION NO.
13/310,755	12/04/2011	Magnus Goertz	NEONODE.P039	1066

75660 7590 07/21/2014

Soquel Group, LLC
P.O. Box 691
Soquel, CA 95073

EXAMINER	
PITARO, RYAN F	
ART UNIT	PAPER NUMBER
2171	

NOTIFICATION DATE	DELIVERY MODE
07/21/2014	ELECTRONIC

Please find below and/or attached an Office communication concerning this application or proceeding.

The time period for reply, if any, is set in the attached communication.

Notice of the Office communication was sent electronically on above-indicated "Notification Date" to the following e-mail address(es):

pto@soquelgroup.com
rblumberg@soquelgroup.com
mberger@soquelgroup.com

UNITED STATES PATENT AND TRADEMARK OFFICE

Commissioner for Patents
United States Patent and Trademark Office
P.O. Box 1450
Alexandria, VA 22313-1450
www.uspto.gov

Application No. : 13310755
Applicant : Goertz
Filing Date : 12/04/2011
Date Mailed : 07/21/2014

NOTICE TO FILE CORRECTED APPLICATION PAPERS

Notice of Allowance Mailed

This application has been accorded an Allowance Date and is being prepared for issuance. The application, however, is incomplete for the reasons below.

Applicant is given two (2) months from the mail date of this Notice within which to respond. This time period for reply is extendable under 37 CFR 1.136(a) for only TWO additional MONTHS.

The informalities requiring correction are indicated in the attachment(s). If the informality pertains to the abstract, specification (including claims) or drawings, the informality must be corrected with an amendment in compliance with 37 CFR 1.121 (or, if the application is a reissue application, 37 CFR 1.173). Such an amendment may be filed after payment of the issue fee if limited to correction of informalities noted herein. See Waiver of 37 CFR 1.312 for Documents Required by the Office of Patent Publication, 1280 Off. Gaz. Patent Office 918 (March 23, 2004). In addition, if the informality is not corrected until after payment of the issue fee, for purposes of 35 U.S.C. 154(b)(1)(iv), "all outstanding requirements" will be considered to have been satisfied when the informality has been corrected. A failure to respond within the above-identified time period will result in the application being ABANDONED.

See attachment(s).

A copy of this notice MUST be returned with the reply. Please address response to "Mail Stop Issue Fee, Commissioner for Patents, P.O. Box 1450, Alexandria, VA 22313-1450".

/Kam Sin/
Publication Branch
Office of Data Management
(571) 272-4200

Application No. 13310755

IDENTIFICATION OF SPECIFICATION/DRAWING INCONSISTENCIES

☐ On Page of the specification there is a brief description of FIG. , but the drawings filed do not include a drawing with that designation. Applicant must respond either by supplying the omitted drawing or by amending the specification to remove all references to that drawing.

☒ The drawings filed 12/04/2011 include FIG. 14, but the specification's brief description of the drawings does not describe a drawing with that designation. Applicant must respond either by amending the specification to add a brief description of that drawing or by correcting the drawings to remove the drawing in question.

☐ Drawings are present in the application and are referred to in the detailed description of the invention, but the specification does not contain a brief description of the drawings as required by 37 CFR 1.74 and 37 CFR 1.77(b)(8).

☐ Page of the specification refers to FIG. , but no drawing with that designation is described in the brief description of the drawings and no drawing with that designation is present in the application. Applicant must respond either by amending the specification to remove all references to that drawing, or by supplying that drawing and amending the specification to add a brief description of it.

☐ OTHER:

☐ COMMENTS:

Attorney's Docket No.: NEONODE.P039 *PATENT*

IN THE UNITED STATES PATENT AND TRADEMARK OFFICE

In Re Patent Application of:	)	
	)	Examiner: Ryan F. Pitaro
Magnus Goertz	)	
	)	Art Unit: 2171
Application No: 13/310,755	)	
	)	
Filed: December 4, 2011	)	
	)	
For: USER INTERFACE	)	
	)	

Mail Stop AMENDMENT
Commissioner for Patents
P. O. Box 1450
Alexandria, VA 22313-1450

AMENDMENT AFTER ALLOWANCE UNDER 37 C.F.R. §1.312

In response to the Notice to File Corrected Application Papers of July 21, 2014, applicant respectfully requests that the above-identified application be amended as follows.

IN THE DESCRIPTION:

Please amend the specification as follows.

Please add the following text immediately after page 5, line 3:

-- Figure 14 shows a computer readable medium in the form of a solid state memory. --

If any matters can be resolved by telephone, applicant requests that the Patent and Trademark Office please contact applicant's representative at the telephone number listed below.

Respectfully submitted,

SOQUEL GROUP LLC

Dated: July 21, 2014

/Marc A. Berger/
Marc A. Berger
Reg. No. 44,029

P.O. Box 691
Soquel, CA 95073
(831) 426-8200
Customer No. 75660

Electronic Acknowledgement Receipt

EFS ID:	19627549
Application Number:	13310755
International Application Number:	
Confirmation Number:	1066
Title of Invention:	USER INTERFACE
First Named Inventor/Applicant Name:	Magnus Goertz
Customer Number:	75660
Filer:	Marc Aron Berger
Filer Authorized By:	
Attorney Docket Number:	NEONODE.P039
Receipt Date:	21-JUL-2014
Filing Date:	04-DEC-2011
Time Stamp:	08:38:00
Application Type:	Utility under 35 USC 111(a)

Payment information:

Submitted with Payment	no

File Listing:

Document Number	Document Description	File Name	File Size(Bytes)/ Message Digest	Multi Part /.zip	Pages (if appl.)
1	Post Allowance Communication - Incoming	NEONODE-P039_ReplyToNoticeToFileCorrectedApplicationPapers_07-21-2014.pdf	46322 7ff62b92a30fa0d862d1a071c9cea05ad0d30df1	no	1

Warnings:	
Information:	

2		NEONODE-P039_Amendment_07-21-2014.pdf	62301 a773ca07171d28153cebdba7038919f55d7ba004	yes	3

	Multipart Description/PDF files in .zip description		
	Document Description	**Start**	**End**
	Amendment after Notice of Allowance (Rule 312)	1	1
	Specification	2	2
	Applicant Arguments/Remarks Made in an Amendment	3	3

Warnings:	
Information:	
Total Files Size (in bytes):	108623

This Acknowledgement Receipt evidences receipt on the noted date by the USPTO of the indicated documents, characterized by the applicant, and including page counts, where applicable. It serves as evidence of receipt similar to a Post Card, as described in MPEP 503.

New Applications Under 35 U.S.C. 111
If a new application is being filed and the application includes the necessary components for a filing date (see 37 CFR 1.53(b)-(d) and MPEP 506), a Filing Receipt (37 CFR 1.54) will be issued in due course and the date shown on this Acknowledgement Receipt will establish the filing date of the application.

National Stage of an International Application under 35 U.S.C. 371
If a timely submission to enter the national stage of an international application is compliant with the conditions of 35 U.S.C. 371 and other applicable requirements a Form PCT/DO/EO/903 indicating acceptance of the application as a national stage submission under 35 U.S.C. 371 will be issued in addition to the Filing Receipt, in due course.

New International Application Filed with the USPTO as a Receiving Office
If a new international application is being filed and the international application includes the necessary components for an international filing date (see PCT Article 11 and MPEP 1810), a Notification of the International Application Number and of the International Filing Date (Form PCT/RO/105) will be issued in due course, subject to prescriptions concerning national security, and the date shown on this Acknowledgement Receipt will establish the international filing date of the application.

Attorney's Docket No.: NEONODE.P039 *PATENT*

IN THE UNITED STATES PATENT AND TRADEMARK OFFICE

In Re Patent Application of:	)	
	)	Examiner: Ryan F. Pitaro
Magnus Goertz	)	
	)	Art Unit: 2171
Application No: 13/310,755	)	
	)	
Filed: December 4, 2011	)	
	)	
For: USER INTERFACE	)	
	)	
	)	

Commissioner for Patents
P. O. Box 1450
Alexandria, VA 22313-1450

REPLY TO NOTICE TO FILE CORRECTED APPLICATION PAPERS

In response to the Notice to File Corrected Application Papers of July 21, 2014, applicant is submitting herewith an Amendment after Allowance with the required amendment to the specification.

If any matters can be resolved by telephone, applicant requests that the Patent and Trademark Office please contact applicant's representative at the telephone number listed below.

Respectfully submitted,
SOQUEL GROUP LLC

Dated: July 21, 2014

/Marc A. Berger/
Marc A. Berger
Reg. No. 44,029

P.O. Box 691
Soquel, CA 95073
(831) 426-8200
Customer No. 75660

PART B - FEE(S) TRANSMITTAL

Complete and send this form, together with applicable fee(s), to: Mail **Mail Stop ISSUE FEE**
Commissioner for Patents
P.O. Box 1450
Alexandria, Virginia 22313-1450
or Fax (571)-273-2885

INSTRUCTIONS: This form should be used for transmitting the ISSUE FEE and PUBLICATION FEE (if required). Blocks 1 through 5 should be completed where appropriate. All further correspondence including the Patent, advance orders and notification of maintenance fees will be mailed to the current correspondence address as indicated unless corrected below or directed otherwise in Block 1, by (a) specifying a new correspondence address; and/or (b) indicating a separate "FEE ADDRESS" for maintenance fee notifications.

CURRENT CORRESPONDENCE ADDRESS (Note: Use Block 1 for any change of address)

75660 7590 06/02/2014
Soquel Group, LLC
P.O. Box 691
Soquel, CA 95073

Note: A certificate of mailing can only be used for domestic mailings of the Fee(s) Transmittal. This certificate cannot be used for any other accompanying papers. Each additional paper, such as an assignment or formal drawing, must have its own certificate of mailing or transmission.

Certificate of Mailing or Transmission
I hereby certify that this Fee(s) Transmittal is being deposited with the United States Postal Service with sufficient postage for first class mail in an envelope addressed to the Mail Stop ISSUE FEE address above, or being facsimile transmitted to the USPTO (571) 273-2885, on the date indicated below.

(Depositor's name)
(Signature)
(Date)

APPLICATION NO.	FILING DATE	FIRST NAMED INVENTOR	ATTORNEY DOCKET NO.	CONFIRMATION NO.
13/310,755	12/04/2011	Magnus Goertz	NEONODE.P039	1066

TITLE OF INVENTION: USER INTERFACE

APPLN. TYPE	ENTITY STATUS	ISSUE FEE DUE	PUBLICATION FEE DUE	PREV. PAID ISSUE FEE	TOTAL FEE(S) DUE	DATE DUE
nonprovisional	UNDISCOUNTED	$960	$0	$0	$960	09/02/2014

EXAMINER	ART UNIT	CLASS-SUBCLASS
PITARO, RYAN F	2171	715-716000

1. Change of correspondence address or indication of "Fee Address" (37 CFR 1.363).
☐ Change of correspondence address (or Change of Correspondence Address form PTO/SB/122) attached.
☐ "Fee Address" indication (or "Fee Address" Indication form PTO/SB/47; Rev 03-02 or more recent) attached. **Use of a Customer Number is required.**

2. For printing on the patent front page, list
(1) The names of up to 3 registered patent attorneys or agents OR, alternatively,
(2) The name of a single firm (having as a member a registered attorney or agent) and the names of up to 2 registered patent attorneys or agents. If no name is listed, no name will be printed.
1 Soquel Group LLC
2
3

3. ASSIGNEE NAME AND RESIDENCE DATA TO BE PRINTED ON THE PATENT (print or type)

PLEASE NOTE: Unless an assignee is identified below, no assignee data will appear on the patent. If an assignee is identified below, the document has been filed for recordation as set forth in 37 CFR 3.11. Completion of this form is NOT a substitute for filing an assignment.

(A) NAME OF ASSIGNEE: Neonode Inc.
(B) RESIDENCE: (CITY and STATE OR COUNTRY): Santa Clara, CA

Please check the appropriate assignee category or categories (will not be printed on the patent): ☐ Individual ☒ Corporation or other private group entity ☐ Government

4a. The following fee(s) are submitted:
☒ Issue Fee
☒ Publication Fee (No small entity discount permitted)
☐ Advance Order - # of Copies _____

4b. Payment of Fee(s): **(Please first reapply any previously paid issue fee shown above)**
☐ A check is enclosed.
☐ Payment by credit card. Form PTO-2038 is attached.
☐ The Director is hereby authorized to charge the required fee(s), any deficiency, or credits any overpayment, to Deposit Account Number _____ (enclose an extra copy of this form).

5. **Change in Entity Status** (from status indicated above)
☐ Applicant certifying micro entity status. See 37 CFR 1.29 — NOTE: Absent a valid certification of Micro Entity Status (see forms PTO/SB/15A and 15B), issue fee payment in the micro entity amount will not be accepted at the risk of application abandonment.
☐ Applicant asserting small entity status. See 37 CFR 1.27 — NOTE: If the application was previously under micro entity status, checking this box will be taken to be a notification of loss of entitlement to micro entity status.
☐ Applicant changing to regular undiscounted fee status. — NOTE: Checking this box will be taken to be a notification of loss of entitlement to small or micro entity status, as applicable.

NOTE: This form must be signed in accordance with 37 CFR 1.31 and 1.33. See 37 CFR 1.4 for signature requirements and certifications.

Authorized Signature M. A. Berger — Date July 5, 2014
Typed or printed name Marc A. Berger — Registration No. 44029

PTOL-85 Part B (10-13) Approved for use through 10/31/2013. OMB 0651-0033 U.S. Patent and Trademark Office; U.S. DEPARTMENT OF COMMERCE

Attorney's Docket No.: NEONODE.P039 *PATENT*

IN THE UNITED STATES PATENT AND TRADEMARK OFFICE

In Re Patent Application of:	)	
	)	Examiner: Ryan F. Pitaro
Magnus Goertz	)	
	)	Art Unit: 2171
Application No: 13/310,755	)	
	)	
Filed: December 4, 2011	)	
	)	
For: USER INTERFACE	)	
	)	

Commissioner for Patents
P. O. Box 1450
Alexandria, VA 22313-1450

COMMENTS ON STATEMENT OF REASONS FOR ALLOWANCE

In the Notice of Allowability mailed on June 2, 2014, the Examiner allowed claims **21**, **37**, **39** – **42**, **46** and **47**. Applicant acknowledges the Examiner's Statements of Reasons for Allowance of the above-referenced patent application, and agrees that the claimed subject matter is patentable. However, applicant takes no position regarding the Reasons for Allowance presented by the Examiner other than the positions applicant may have previously taken during prosecution. Therefore, the Examiner's Reasons for Allowance should not be attributed to applicant as an indication of the basis for applicant's belief that the claims are patentable. Furthermore, applicant respectfully asserts that there may also be additional reasons for patentability of the claimed subject matter not explicitly stated in this record, and applicant does not waive its rights to such arguments by not further addressing such reasons herein.

Respectfully submitted,

SOQUEL GROUP LLC

Dated: July 5, 2014

/Marc A. Berger/
Marc A. Berger
Reg. No. 44,029

P.O. Box 691
Soquel, CA 95073
(831) 426-8200
Customer No. 75660

Electronic Patent Application Fee Transmittal	
Application Number:	13310755
Filing Date:	04-Dec-2011
Title of Invention:	USER INTERFACE
First Named Inventor/Applicant Name:	Magnus Goertz
Filer:	Marc Aron Berger
Attorney Docket Number:	NEONODE.P039
Filed as Large Entity	

Utility under 35 USC 111(a) Filing Fees

Description	Fee Code	Quantity	Amount	Sub-Total in USD($)
Basic Filing:				
Pages:				
Claims:				
Miscellaneous-Filing:				
Petition:				
Patent-Appeals-and-Interference:				
Post-Allowance-and-Post-Issuance:				
Utility Appl Issue Fee	1501	1	960	960
Publ. Fee- Early, Voluntary, or Normal	1504	1	0	0

Description	Fee Code	Quantity	Amount	Sub-Total in USD($)
Extension-of-Time:				
Miscellaneous:				
			Total in USD ($)	**960**

Electronic Acknowledgement Receipt	
EFS ID:	19498121
Application Number:	13310755
International Application Number:	
Confirmation Number:	1066
Title of Invention:	USER INTERFACE
First Named Inventor/Applicant Name:	Magnus Goertz
Customer Number:	75660
Filer:	Marc Aron Berger
Filer Authorized By:	
Attorney Docket Number:	NEONODE.P039
Receipt Date:	05-JUL-2014
Filing Date:	04-DEC-2011
Time Stamp:	16:44:38
Application Type:	Utility under 35 USC 111(a)

Payment information:

Submitted with Payment	yes
Payment Type	Credit Card
Payment was successfully received in RAM	$960
RAM confirmation Number	7556
Deposit Account	
Authorized User	

File Listing:

Document Number	Document Description	File Name	File Size(Bytes)/ Message Digest	Multi Part /.zip	Pages (if appl.)

1	Issue Fee Payment (PTO-85B)	NEONODE-P039_IssueFeeTransmittal_07-05-2014.pdf	750225 2e1445949652de284ed2b239dc2139206d0193b9	no	1
Warnings:					
Information:					
2	Post Allowance Communication - Incoming	NEONODE-P039_CommentsOnStatementOfReasonsForAllowance_07-05-2014.pdf	62515 eedff1508205d9d8b7c5acbf151343b99393edce	no	2
Warnings:					
Information:					
3	Fee Worksheet (SB06)	fee-info.pdf	31827 acf7c9f44692a1bf99df0c0a496cbc04e04a35ec	no	2
Warnings:					
Information:					
		Total Files Size (in bytes):	844567		

This Acknowledgement Receipt evidences receipt on the noted date by the USPTO of the indicated documents, characterized by the applicant, and including page counts, where applicable. It serves as evidence of receipt similar to a Post Card, as described in MPEP 503.

<u>New Applications Under 35 U.S.C. 111</u>
If a new application is being filed and the application includes the necessary components for a filing date (see 37 CFR 1.53(b)-(d) and MPEP 506), a Filing Receipt (37 CFR 1.54) will be issued in due course and the date shown on this Acknowledgement Receipt will establish the filing date of the application.

<u>National Stage of an International Application under 35 U.S.C. 371</u>
If a timely submission to enter the national stage of an international application is compliant with the conditions of 35 U.S.C. 371 and other applicable requirements a Form PCT/DO/EO/903 indicating acceptance of the application as a national stage submission under 35 U.S.C. 371 will be issued in addition to the Filing Receipt, in due course.

<u>New International Application Filed with the USPTO as a Receiving Office</u>
If a new international application is being filed and the international application includes the necessary components for an international filing date (see PCT Article 11 and MPEP 1810), a Notification of the International Application Number and of the International Filing Date (Form PCT/RO/105) will be issued in due course, subject to prescriptions concerning national security, and the date shown on this Acknowledgement Receipt will establish the international filing date of the application.

UNITED STATES PATENT AND TRADEMARK OFFICE

UNITED STATES DEPARTMENT OF COMMERCE
United States Patent and Trademark Office
Address: COMMISSIONER FOR PATENTS
P.O. Box 1450
Alexandria, Virginia 22313-1450
www.uspto.gov

NOTICE OF ALLOWANCE AND FEE(S) DUE

75660 7590 06/02/2014

Soquel Group, LLC
P.O. Box 691
Soquel, CA 95073

EXAMINER
PITARO, RYAN F

ART UNIT	PAPER NUMBER
2171	

DATE MAILED: 06/02/2014

APPLICATION NO.	FILING DATE	FIRST NAMED INVENTOR	ATTORNEY DOCKET NO.	CONFIRMATION NO.
13/310,755	12/04/2011	Magnus Goertz	NEONODE.P039	1066

TITLE OF INVENTION: USER INTERFACE

APPLN. TYPE	ENTITY STATUS	ISSUE FEE DUE	PUBLICATION FEE DUE	PREV. PAID ISSUE FEE	TOTAL FEE(S) DUE	DATE DUE
nonprovisional	UNDISCOUNTED	$960	$0	$0	$960	09/02/2014

THE APPLICATION IDENTIFIED ABOVE HAS BEEN EXAMINED AND IS ALLOWED FOR ISSUANCE AS A PATENT. PROSECUTION ON THE MERITS IS CLOSED. THIS NOTICE OF ALLOWANCE IS NOT A GRANT OF PATENT RIGHTS. THIS APPLICATION IS SUBJECT TO WITHDRAWAL FROM ISSUE AT THE INITIATIVE OF THE OFFICE OR UPON PETITION BY THE APPLICANT. SEE 37 CFR 1.313 AND MPEP 1308.

THE ISSUE FEE AND PUBLICATION FEE (IF REQUIRED) MUST BE PAID WITHIN THREE MONTHS FROM THE MAILING DATE OF THIS NOTICE OR THIS APPLICATION SHALL BE REGARDED AS ABANDONED. THIS STATUTORY PERIOD CANNOT BE EXTENDED. SEE 35 U.S.C. 151. THE ISSUE FEE DUE INDICATED ABOVE DOES NOT REFLECT A CREDIT FOR ANY PREVIOUSLY PAID ISSUE FEE IN THIS APPLICATION. IF AN ISSUE FEE HAS PREVIOUSLY BEEN PAID IN THIS APPLICATION (AS SHOWN ABOVE), THE RETURN OF PART B OF THIS FORM WILL BE CONSIDERED A REQUEST TO REAPPLY THE PREVIOUSLY PAID ISSUE FEE TOWARD THE ISSUE FEE NOW DUE.

HOW TO REPLY TO THIS NOTICE:

I. Review the ENTITY STATUS shown above. If the ENTITY STATUS is shown as SMALL or MICRO, verify whether entitlement to that entity status still applies.

If the ENTITY STATUS is the same as shown above, pay the TOTAL FEE(S) DUE shown above.

If the ENTITY STATUS is changed from that shown above, on PART B - FEE(S) TRANSMITTAL, complete section number 5 titled "Change in Entity Status (from status indicated above)".

For purposes of this notice, small entity fees are 1/2 the amount of undiscounted fees, and micro entity fees are 1/2 the amount of small entity fees.

II. PART B - FEE(S) TRANSMITTAL, or its equivalent, must be completed and returned to the United States Patent and Trademark Office (USPTO) with your ISSUE FEE and PUBLICATION FEE (if required). If you are charging the fee(s) to your deposit account, section "4b" of Part B - Fee(s) Transmittal should be completed and an extra copy of the form should be submitted. If an equivalent of Part B is filed, a request to reapply a previously paid issue fee must be clearly made, and delays in processing may occur due to the difficulty in recognizing the paper as an equivalent of Part B.

III. All communications regarding this application must give the application number. Please direct all communications prior to issuance to Mail Stop ISSUE FEE unless advised to the contrary.

IMPORTANT REMINDER: Utility patents issuing on applications filed on or after Dec. 12, 1980 may require payment of maintenance fees. It is patentee's responsibility to ensure timely payment of maintenance fees when due.

PART B - FEE(S) TRANSMITTAL

Complete and send this form, together with applicable fee(s), to: Mail **Mail Stop ISSUE FEE**
Commissioner for Patents
P.O. Box 1450
Alexandria, Virginia 22313-1450
or Fax (571)-273-2885

INSTRUCTIONS: This form should be used for transmitting the ISSUE FEE and PUBLICATION FEE (if required). Blocks 1 through 5 should be completed where appropriate. All further correspondence including the Patent, advance orders and notification of maintenance fees will be mailed to the current correspondence address as indicated unless corrected below or directed otherwise in Block 1, by (a) specifying a new correspondence address; and/or (b) indicating a separate "FEE ADDRESS" for maintenance fee notifications.

CURRENT CORRESPONDENCE ADDRESS (Note: Use Block 1 for any change of address)

75660 7590 06/02/2014
Soquel Group, LLC
P.O. Box 691
Soquel, CA 95073

Note: A certificate of mailing can only be used for domestic mailings of the Fee(s) Transmittal. This certificate cannot be used for any other accompanying papers. Each additional paper, such as an assignment or formal drawing, must have its own certificate of mailing or transmission.

Certificate of Mailing or Transmission
I hereby certify that this Fee(s) Transmittal is being deposited with the United States Postal Service with sufficient postage for first class mail in an envelope addressed to the Mail Stop ISSUE FEE address above, or being facsimile transmitted to the USPTO (571) 273-2885, on the date indicated below.

(Depositor's name)
(Signature)
(Date)

APPLICATION NO.	FILING DATE	FIRST NAMED INVENTOR	ATTORNEY DOCKET NO.	CONFIRMATION NO.
13/310,755	12/04/2011	Magnus Goertz	NEONODE.P039	1066

TITLE OF INVENTION: USER INTERFACE

APPLN. TYPE	ENTITY STATUS	ISSUE FEE DUE	PUBLICATION FEE DUE	PREV. PAID ISSUE FEE	TOTAL FEE(S) DUE	DATE DUE
nonprovisional	UNDISCOUNTED	$960	$0	$0	$960	09/02/2014

EXAMINER	ART UNIT	CLASS-SUBCLASS
PITARO, RYAN F	2171	715-716000

1. Change of correspondence address or indication of "Fee Address" (37 CFR 1.363).
❑ Change of correspondence address (or Change of Correspondence Address form PTO/SB/122) attached.
❑ "Fee Address" indication (or "Fee Address" Indication form PTO/SB/47; Rev 03-02 or more recent) attached. **Use of a Customer Number is required.**

2. For printing on the patent front page, list
(1) The names of up to 3 registered patent attorneys or agents OR, alternatively,
(2) The name of a single firm (having as a member a registered attorney or agent) and the names of up to 2 registered patent attorneys or agents. If no name is listed, no name will be printed.
1 _____
2 _____
3 _____

3. ASSIGNEE NAME AND RESIDENCE DATA TO BE PRINTED ON THE PATENT (print or type)

PLEASE NOTE: Unless an assignee is identified below, no assignee data will appear on the patent. If an assignee is identified below, the document has been filed for recordation as set forth in 37 CFR 3.11. Completion of this form is NOT a substitute for filing an assignment.

(A) NAME OF ASSIGNEE (B) RESIDENCE: (CITY and STATE OR COUNTRY)

Please check the appropriate assignee category or categories (will not be printed on the patent) : ❑ Individual ❑ Corporation or other private group entity ❑ Government

4a. The following fee(s) are submitted:
❑ Issue Fee
❑ Publication Fee (No small entity discount permitted)
❑ Advance Order - # of Copies _____

4b. Payment of Fee(s): (**Please first reapply any previously paid issue fee shown above**)
❑ A check is enclosed.
❑ Payment by credit card. Form PTO-2038 is attached.
❑ The Director is hereby authorized to charge the required fee(s), any deficiency, or credits any overpayment, to Deposit Account Number _____ (enclose an extra copy of this form).

5. **Change in Entity Status** (from status indicated above)
❑ Applicant certifying micro entity status. See 37 CFR 1.29 — NOTE: Absent a valid certification of Micro Entity Status (see forms PTO/SB/15A and 15B), issue fee payment in the micro entity amount will not be accepted at the risk of application abandonment.
❑ Applicant asserting small entity status. See 37 CFR 1.27 — NOTE: If the application was previously under micro entity status, checking this box will be taken to be a notification of loss of entitlement to micro entity status.
❑ Applicant changing to regular undiscounted fee status. — NOTE: Checking this box will be taken to be a notification of loss of entitlement to small or micro entity status, as applicable.

NOTE: This form must be signed in accordance with 37 CFR 1.31 and 1.33. See 37 CFR 1.4 for signature requirements and certifications.

Authorized Signature _____ Date _____

Typed or printed name _____ Registration No. _____

PTOL-85 Part B (10-13) Approved for use through 10/31/2013. OMB 0651-0033 U.S. Patent and Trademark Office; U.S. DEPARTMENT OF COMMERCE

UNITED STATES PATENT AND TRADEMARK OFFICE

UNITED STATES DEPARTMENT OF COMMERCE
United States Patent and Trademark Office
Address: COMMISSIONER FOR PATENTS
P.O. Box 1450
Alexandria, Virginia 22313-1450
www.uspto.gov

APPLICATION NO.	FILING DATE	FIRST NAMED INVENTOR	ATTORNEY DOCKET NO.	CONFIRMATION NO.
13/310,755	12/04/2011	Magnus Goertz	NEONODE.P039	1066

75660 7590 06/02/2014

Soquel Group, LLC
P.O. Box 691
Soquel, CA 95073

EXAMINER	
PITARO, RYAN F	
ART UNIT	PAPER NUMBER
2171	

DATE MAILED: 06/02/2014

Determination of Patent Term Adjustment under 35 U.S.C. 154 (b)
(Applications filed on or after May 29, 2000)

The Office has discontinued providing a Patent Term Adjustment (PTA) calculation with the Notice of Allowance.

Section 1(h)(2) of the AIA Technical Corrections Act amended 35 U.S.C. 154(b)(3)(B)(i) to eliminate the requirement that the Office provide a patent term adjustment determination with the notice of allowance. See Revisions to Patent Term Adjustment, 78 Fed. Reg. 19416, 19417 (Apr. 1, 2013). Therefore, the Office is no longer providing an initial patent term adjustment determination with the notice of allowance. The Office will continue to provide a patent term adjustment determination with the Issue Notification Letter that is mailed to applicant approximately three weeks prior to the issue date of the patent, and will include the patent term adjustment on the patent. Any request for reconsideration of the patent term adjustment determination (or reinstatement of patent term adjustment) should follow the process outlined in 37 CFR 1.705.

Any questions regarding the Patent Term Extension or Adjustment determination should be directed to the Office of Patent Legal Administration at (571)-272-7702. Questions relating to issue and publication fee payments should be directed to the Customer Service Center of the Office of Patent Publication at 1-(888)-786-0101 or (571)-272-4200.

OMB Clearance and PRA Burden Statement for PTOL-85 Part B

The Paperwork Reduction Act (PRA) of 1995 requires Federal agencies to obtain Office of Management and Budget approval before requesting most types of information from the public. When OMB approves an agency request to collect information from the public, OMB (i) provides a valid OMB Control Number and expiration date for the agency to display on the instrument that will be used to collect the information and (ii) requires the agency to inform the public about the OMB Control Number's legal significance in accordance with 5 CFR 1320.5(b).

The information collected by PTOL-85 Part B is required by 37 CFR 1.311. The information is required to obtain or retain a benefit by the public which is to file (and by the USPTO to process) an application. Confidentiality is governed by 35 U.S.C. 122 and 37 CFR 1.14. This collection is estimated to take 12 minutes to complete, including gathering, preparing, and submitting the completed application form to the USPTO. Time will vary depending upon the individual case. Any comments on the amount of time you require to complete this form and/or suggestions for reducing this burden, should be sent to the Chief Information Officer, U.S. Patent and Trademark Office, U.S. Department of Commerce, P.O. Box 1450, Alexandria, Virginia 22313-1450. DO NOT SEND FEES OR COMPLETED FORMS TO THIS ADDRESS. SEND TO: Commissioner for Patents, P.O. Box 1450, Alexandria, Virginia 22313-1450. Under the Paperwork Reduction Act of 1995, no persons are required to respond to a collection of information unless it displays a valid OMB control number.

Privacy Act Statement

The Privacy Act of 1974 (P.L. 93-579) requires that you be given certain information in connection with your submission of the attached form related to a patent application or patent. Accordingly, pursuant to the requirements of the Act, please be advised that: (1) the general authority for the collection of this information is 35 U.S.C. 2(b)(2); (2) furnishing of the information solicited is voluntary; and (3) the principal purpose for which the information is used by the U.S. Patent and Trademark Office is to process and/or examine your submission related to a patent application or patent. If you do not furnish the requested information, the U.S. Patent and Trademark Office may not be able to process and/or examine your submission, which may result in termination of proceedings or abandonment of the application or expiration of the patent.

The information provided by you in this form will be subject to the following routine uses:

1. The information on this form will be treated confidentially to the extent allowed under the Freedom of Information Act (5 U.S.C. 552) and the Privacy Act (5 U.S.C 552a). Records from this system of records may be disclosed to the Department of Justice to determine whether disclosure of these records is required by the Freedom of Information Act.
2. A record from this system of records may be disclosed, as a routine use, in the course of presenting evidence to a court, magistrate, or administrative tribunal, including disclosures to opposing counsel in the course of settlement negotiations.
3. A record in this system of records may be disclosed, as a routine use, to a Member of Congress submitting a request involving an individual, to whom the record pertains, when the individual has requested assistance from the Member with respect to the subject matter of the record.
4. A record in this system of records may be disclosed, as a routine use, to a contractor of the Agency having need for the information in order to perform a contract. Recipients of information shall be required to comply with the requirements of the Privacy Act of 1974, as amended, pursuant to 5 U.S.C. 552a(m).
5. A record related to an International Application filed under the Patent Cooperation Treaty in this system of records may be disclosed, as a routine use, to the International Bureau of the World Intellectual Property Organization, pursuant to the Patent Cooperation Treaty.
6. A record in this system of records may be disclosed, as a routine use, to another federal agency for purposes of National Security review (35 U.S.C. 181) and for review pursuant to the Atomic Energy Act (42 U.S.C. 218(c)).
7. A record from this system of records may be disclosed, as a routine use, to the Administrator, General Services, or his/her designee, during an inspection of records conducted by GSA as part of that agency's responsibility to recommend improvements in records management practices and programs, under authority of 44 U.S.C. 2904 and 2906. Such disclosure shall be made in accordance with the GSA regulations governing inspection of records for this purpose, and any other relevant (i.e., GSA or Commerce) directive. Such disclosure shall not be used to make determinations about individuals.
8. A record from this system of records may be disclosed, as a routine use, to the public after either publication of the application pursuant to 35 U.S.C. 122(b) or issuance of a patent pursuant to 35 U.S.C. 151. Further, a record may be disclosed, subject to the limitations of 37 CFR 1.14, as a routine use, to the public if the record was filed in an application which became abandoned or in which the proceedings were terminated and which application is referenced by either a published application, an application open to public inspection or an issued patent.
9. A record from this system of records may be disclosed, as a routine use, to a Federal, State, or local law enforcement agency, if the USPTO becomes aware of a violation or potential violation of law or regulation.

Notice of Allowability	Application No. 13/310,755	Applicant(s) GOERTZ, MAGNUS	
	Examiner RYAN PITARO	Art Unit 2171	AIA (First Inventor to File) Status No

-- The MAILING DATE of this communication appears on the cover sheet with the correspondence address--

All claims being allowable, PROSECUTION ON THE MERITS IS (OR REMAINS) CLOSED in this application. If not included herewith (or previously mailed), a Notice of Allowance (PTOL-85) or other appropriate communication will be mailed in due course. **THIS NOTICE OF ALLOWABILITY IS NOT A GRANT OF PATENT RIGHTS.** This application is subject to withdrawal from issue at the initiative of the Office or upon petition by the applicant. See 37 CFR 1.313 and MPEP 1308.

1. ☒ This communication is responsive to *the amendment filed 3/19/2014*.
   ☐ A declaration(s)/affidavit(s) under **37 CFR 1.130(b)** was/were filed on_____.
2. ☐ An election was made by the applicant in response to a restriction requirement set forth during the interview on _____; the restriction requirement and election have been incorporated into this action.
3. ☒ The allowed claim(s) is/are *21,37,39-42,46 and 47*. As a result of the allowed claim(s), you may be eligible to benefit from the **Patent Prosecution Highway** program at a participating intellectual property office for the corresponding application. For more information, please see http://www.uspto.gov/patents/init_events/pph/index.jsp or send an inquiry to PPHfeedback@uspto.gov .
4. ☐ Acknowledgment is made of a claim for foreign priority under 35 U.S.C. § 119(a)-(d) or (f).

   Certified copies:

   a) ☐ All b) ☐ Some *c) ☐ None of the:
   1. ☐ Certified copies of the priority documents have been received.
   2. ☐ Certified copies of the priority documents have been received in Application No. _____ .
   3. ☐ Copies of the certified copies of the priority documents have been received in this national stage application from the International Bureau (PCT Rule 17.2(a)).

   * Certified copies not received: _____.

Applicant has THREE MONTHS FROM THE "MAILING DATE" of this communication to file a reply complying with the requirements noted below. Failure to timely comply will result in ABANDONMENT of this application.
THIS THREE-MONTH PERIOD IS NOT EXTENDABLE.

5. ☐ CORRECTED DRAWINGS (as "replacement sheets") must be submitted.
   ☐ including changes required by the attached Examiner's Amendment / Comment or in the Office action of Paper No./Mail Date _____.

   Identifying indicia such as the application number (see 37 CFR 1.84(c)) should be written on the drawings in the front (not the back) of each sheet. Replacement sheet(s) should be labeled as such in the header according to 37 CFR 1.121(d).
6. ☐ DEPOSIT OF and/or INFORMATION about the deposit of BIOLOGICAL MATERIAL must be submitted. Note the attached Examiner's comment regarding REQUIREMENT FOR THE DEPOSIT OF BIOLOGICAL MATERIAL.

Attachment(s)

1. ☐ Notice of References Cited (PTO-892)
2. ☒ Information Disclosure Statements (PTO/SB/08), Paper No./Mail Date 5/20/2014
3. ☐ Examiner's Comment Regarding Requirement for Deposit of Biological Material
4. ☐ Interview Summary (PTO-413), Paper No./Mail Date _____ .
5. ☐ Examiner's Amendment/Comment
6. ☒ Examiner's Statement of Reasons for Allowance
7. ☐ Other _____.

/RYAN PITARO/
Primary Examiner, Art Unit 2171

The present application is being examined under the pre-AIA first to invent provisions.

This application is in condition for allowance except for the presence of claims 19-20,28-36 are directed to separate inventions are non-elected without traverse. Accordingly, claims 19-20, and 28-36 have been cancelled.

Allowable Subject Matter

Claims 21,37,39-42,46-47 are allowed.

The following is an examiner's statement of reasons for allowance: The prior art is silent in teaching an electronic device having a touch-sensitive display screen, cause the processor to enable a user interface of the device, the user interface comprising at least two states, namely, (a) a tap-present state, wherein a plurality of tap-activatable icons for a respective plurality of pre\- designated system functions are present, each system function being activated in response to a tap on its respective icon, and (b) a tap-absent state, wherein tap-activatable icons are absent but an otherwise- activatable graphic is present in a strip along at least one edge of the display screen for transitioning the user interface from the tap-absent state to the tap-present state in response to a multi-step user gesture comprising (i) an object touching the display screen within the strip, and (ii) the object gliding ~ on the display screen away from and out of the strip.

Any comments considered necessary by applicant must be submitted no later than the payment of the issue fee and, to avoid processing delays, should preferably accompany the issue fee. Such submissions should be clearly labeled "Comments on Statement of Reasons for Allowance."

Any inquiry concerning this communication or earlier communications from the examiner should be directed to RYAN PITARO whose telephone number is (571)272-4071. The examiner can normally be reached on 9:00am - 5:30pm Mondays through Fridays.

If attempts to reach the examiner by telephone are unsuccessful, the examiner's supervisor, Matt Kim can be reached on 571-272-4182. The fax phone number for the organization where this application or proceeding is assigned is 571-273-8300.

Information regarding the status of an application may be obtained from the Patent Application Information Retrieval (PAIR) system. Status information for published applications may be obtained from either Private PAIR or Public PAIR. Status information for unpublished applications is available through Private PAIR only. For more information about the PAIR system, see http://pair-direct.uspto.gov. Should you have questions on access to the Private PAIR system, contact the Electronic Business Center (EBC) at 866-217-9197 (toll-free). If you would like assistance from a USPTO Customer Service Representative or access to the automated information system, call 800-786-9199 (IN USA OR CANADA) or 571-272-1000.

/RYAN PITARO/
Primary Examiner, Art Unit 2171

EAST Search History

EAST Search History (Prior Art)

Ref #	Hits	Search Query	DBs	Default Operator	Plurals	Time Stamp
L1	8	("4847606" | "6664983" | "6765559").PN.	US-PGPUB; USPAT; FPRS; EPO; DERWENT	OR	ON	2014/05/28 14:02
L2	155	(strip zone region area) near3 edge same (slide glide swipe touch) and @ay<="2002" and ("715"/$.ccls. "345"/$.ccls.)	US-PGPUB; USPAT; FPRS; EPO; DERWENT	OR	ON	2014/05/28 14:06
L3	135	(activat$7 launch) with (alone "not" "without") with (click clicking tap tapping) and @ay<="2002"	US-PGPUB; USPAT; EPO; DERWENT; IBM_TDB	OR	ON	2014/05/28 14:08
L4	0	3 and 2	US-PGPUB; USPAT; EPO; DERWENT; IBM_TDB	OR	ON	2014/05/28 14:08
L5	228	(home) near (screen state) with transition	US-PGPUB; USPAT; EPO; DERWENT; IBM_TDB	OR	ON	2014/05/28 14:10
L6	0	5 and 2	US-PGPUB; USPAT; EPO; DERWENT; IBM_TDB	OR	ON	2014/05/28 14:10
L7	0	5 and 3	US-PGPUB; USPAT; EPO; DERWENT; IBM_TDB	OR	ON	2014/05/28 14:11
L8	16	(swipe slide glide) with gesture and "715"/$.ccls. and @ay<="2002"	US-PGPUB; USPAT; DERWENT; IBM_TDB	OR	ON	2014/05/28 14:11
L9	62	(strip zone region area) near3 edge same (slide glide swipe drag) and @ay<="2002" and ("715"/$.ccls. "345"/$.ccls.)	US-PGPUB; USPAT; FPRS; EPO; DERWENT	OR	ON	2014/05/28 14:11
L10	0	(strip zone region area) near3 edge same (slide glide swipe drag) with away and @ay<="2002" and ("715"/$.ccls. "345"/$.ccls.)	US-PGPUB; USPAT; FPRS; EPO; DERWENT	OR	ON	2014/05/28 14:11

L11	3	(strip zone region area) near3 edge same (slide glide swipe drag) with (out away) and @ay<="2002" and ("715"/$.ccls. "345"/$.ccls.)	US-PGPUB; USPAT; FPRS; EPO; DERWENT	OR	ON	2014/05/28 14:11
S1	2	"20080201637"	US-PGPUB; USPAT; EPO; DERWENT; IBM_TDB	OR	ON	2012/05/02 19:01
S2	2	"8015494"	US-PGPUB; USPAT; EPO; DERWENT; IBM_TDB	OR	ON	2012/05/02 19:14
S3	7	widget with combin$7 with clock	US-PGPUB; USPAT; EPO; DERWENT; IBM_TDB	OR	ON	2012/05/02 19:19
S4	4	"2008023528"	US-PGPUB; USPAT; EPO; DERWENT; IBM_TDB	OR	ON	2012/05/02 22:10
S5	2	"20080235285"	US-PGPUB; USPAT; EPO; DERWENT; IBM_TDB	OR	ON	2012/05/02 22:11
S6	4	slide with answer with (hang disconnect)	US-PGPUB; USPAT; EPO; DERWENT; IBM_TDB	OR	ON	2012/05/03 12:30
S7	500	slide with answer	US-PGPUB; USPAT; EPO; DERWENT; IBM_TDB	OR	ON	2012/05/03 12:30
S8	54	slide with answer and "715"/$.ccls.	US-PGPUB; USPAT; EPO; DERWENT; IBM_TDB	OR	ON	2012/05/03 12:30
S9	0	swipe with answer and "715"/$.ccls.	US-PGPUB; USPAT; EPO; DERWENT; IBM_TDB	OR	ON	2012/05/03 12:33
S10	2	"20120052920"	US-PGPUB; USPAT; EPO; DERWENT; IBM_TDB	OR	ON	2012/05/03 12:35
S11	2	answer with ignore with (slide swipe glide)	US-PGPUB; USPAT; EPO; DERWENT; IBM_TDB	OR	ON	2012/05/03 12:43

S12	7555	(keypad keyboard) with (input entry) with (mobile telephone phone) and @ay<="2002"	US-PGPUB; USPAT; EPO; DERWENT; IBM_TDB	OR	ON	2012/05/03 12:53
S13	348	(keypad keyboard) with (input entry) with (mobile telephone phone) and @ay<="2002" and "715"/$.ccls.	US-PGPUB; USPAT; EPO; DERWENT; IBM_TDB	OR	ON	2012/05/03 12:53
S14	263	(keypad keyboard) with (input entry) with (mobile telephone phone) and @ay<="2001" and "715"/$.ccls.	US-PGPUB; USPAT; EPO; DERWENT; IBM_TDB	OR	ON	2012/05/03 12:53
S15	71	(keypad keyboard) with (input entry) with (mobile telephone phone) with (number sms text) and @ay<="2001" and "715"/$.ccls.	US-PGPUB; USPAT; EPO; DERWENT; IBM_TDB	OR	ON	2012/05/03 12:54
S16	3	(touch virtual) near2(keypad keyboard) with (input entry) with (mobile telephone phone) with (number sms text) and @ay<="2001" and "715"/$.ccls.	US-PGPUB; USPAT; EPO; DERWENT; IBM_TDB	OR	ON	2012/05/03 12:54
S17	10	(touch virtual) near2(keypad keyboard) with (input entry) with (mobile telephone phone) and @ay<="2001" and "715"/$.ccls.	US-PGPUB; USPAT; EPO; DERWENT; IBM_TDB	OR	ON	2012/05/03 12:55
S18	18	(touch virtual) near2(keypad keyboard) with (input entry) with (mobile telephone phone) and @ay<="2002" and "715"/$.ccls.	US-PGPUB; USPAT; EPO; DERWENT; IBM_TDB	OR	ON	2012/05/03 12:56
S19	12	("20060088216" | "4763356" | "5159664" | "5363481" | "5500923" | "5974161" | "6084598" | "6243071" | "6424357" | "6791537" | "6810272" | "6944472").PN.	US-PGPUB; USPAT; USOCR	OR	ON	2012/05/03 12:57
S20	13	("4972496" | "5157783" | "5199104" | "5237651" | "5283864" | "5341293" | "5347295" | "5367453" | "5377281" | "5390281" | "5392387" | "5398310" | "5404442").PN.	US-PGPUB; USPAT; USOCR	OR	ON	2012/05/03 12:58
S21	2038	(smartphone (smart near phone)) and @ay<="2002"	US-PGPUB; USPAT; USOCR	OR	ON	2012/05/03 12:59
S22	88	(smartphone (smart near phone)) and @ay<="2002" and (touch virtual) near (keypad keyboard)	US-PGPUB; USPAT; USOCR	OR	ON	2012/05/03 13:00
S23	12	(smartphone (smart near phone)) and @ay<="2002" and (touch virtual) near (keypad keyboard) and sms	US-PGPUB; USPAT; USOCR	OR	ON	2012/05/03 13:01
S24	183	@ay<="2002" and (touch virtual) near (keypad keyboard) and sms	US-PGPUB; USPAT; USOCR	OR	ON	2012/05/03 13:03

S25	5	@ay<="2002" and (touch virtual) near (keypad keyboard) with sms	US-PGPUB; USPAT; USOCR	OR	ON	2012/05/03 13:04
S26	48	@ay<="2002" and (touch virtual) near (keypad keyboard) and sms with phone	US-PGPUB; USPAT; USOCR	OR	ON	2012/05/03 13:04
S27	185	save near4 text with application	US-PGPUB; USPAT; USOCR	OR	ON	2012/05/03 13:11
S28	52	save near4 text with application and @ay<="2002"	US-PGPUB; USPAT; USOCR	OR	ON	2012/05/03 13:12
S29	0	save near4 (string text) with application with (phone sms email) and @ay<="2002"	US-PGPUB; USPAT; USOCR	OR	ON	2012/05/03 13:13
S30	14	save near4 (string text) with (phone sms email) and @ay<="2002"	US-PGPUB; USPAT; USOCR	OR	ON	2012/05/03 13:13
S31	198	(string text) near input with (phone sms email) and @ay<="2002"	US-PGPUB; USPAT; USOCR	OR	ON	2012/05/03 13:15
S32	272	(string text) near2 input with (phone sms email) and @ay<="2002"	US-PGPUB; USPAT; USOCR	OR	ON	2012/05/03 13:16
S33	0	(string text) near2 input with execute with (phone sms email) and @ay<="2002"	US-PGPUB; USPAT; USOCR	OR	ON	2012/05/03 13:16
S34	16	(string text) near2 input with application with (phone sms email) and @ay<="2002"	US-PGPUB; USPAT; USOCR	OR	ON	2012/05/03 13:16
S35	6	(string text) near2 input with option with (phone call sms email) and @ay<="2002"	US-PGPUB; USPAT; USOCR	OR	ON	2012/05/03 13:19
S36	412	(string text) with option with (phone call sms email) and @ay<="2002"	US-PGPUB; USPAT; USOCR	OR	ON	2012/05/03 13:20
S37	43	(string text) with option with (phone call sms email) and @ay<="2002" and "715"/$.ccls.	US-PGPUB; USPAT; USOCR	OR	ON	2012/05/03 13:20
S38	99	(number) with option with (phone call sms email contact) and @ay<="2002" and "715"/$.ccls.	US-PGPUB; USPAT; USOCR	OR	ON	2012/05/03 13:22
S39	2	input near(number) with option with (phone call sms email contact) and @ay<="2002" and "715"/$.ccls.	US-PGPUB; USPAT; USOCR	OR	ON	2012/05/03 13:23
S40	105	input near3 (number) with (phone call sms email contact) and @ay<="2002" and "715"/$.ccls.	US-PGPUB; USPAT; USOCR	OR	ON	2012/05/03 13:25
S41	8	input near3 (number) with option with (phone call sms email contact) and @ay<="2002" and "715"/$.ccls.	US-PGPUB; USPAT; USOCR	OR	ON	2012/05/03 13:25
S42	5	field with (number) with option with (phone call sms email contact) and @ay<="2002" and "715"/$.ccls.	US-PGPUB; USPAT; USOCR	OR	ON	2012/05/03 13:26
S43	99	(number) with option with (phone call sms email contact) and @ay<="2002" and "715"/$.ccls.	US-PGPUB; USPAT; USOCR	OR	ON	2012/05/03 13:27

S44	11	(number) with option with list with (phone call sms email contact) and @ay<="2002" and "715"/$.ccls.	US-PGPUB; USPAT; USOCR	OR	ON	2012/05/03 13:27
S45	0	file near type with switch with (touch tap) and @ay<="2002"	US-PGPUB; USPAT; EPO; DERWENT; IBM_TDB	OR	ON	2012/05/03 14:07
S46	2202	type with switch with (touch tap) and @ay<="2002"	US-PGPUB; USPAT; EPO; DERWENT; IBM_TDB	OR	ON	2012/05/03 14:07
S47	57	(application file app icon) with type with switch with (touch tap) and @ay<="2002"	US-PGPUB; USPAT; EPO; DERWENT; IBM_TDB	OR	ON	2012/05/03 14:07
S48	46	(application file app icon) near switch with (touch tap) and @ay<="2002"	US-PGPUB; USPAT; EPO; DERWENT; IBM_TDB	OR	ON	2012/05/03 14:08
S49	39263	(application file app icon) with (second near2 (set subset)) switch with (touch tap) and @ay<="2002"	US-PGPUB; USPAT; EPO; DERWENT; IBM_TDB	OR	ON	2012/05/03 14:09
S50	13	(application file app icon) with (second near2 (set subset)) with (touch tap) and @ay<="2002"	US-PGPUB; USPAT; EPO; DERWENT; IBM_TDB	OR	ON	2012/05/03 14:09
S51	505	(application) with data with (second near2 (set subset)) and @ay<="2002"	US-PGPUB; USPAT; EPO; DERWENT; IBM_TDB	OR	ON	2012/05/03 14:13
S52	8	(application) with data with (second near2 (set subset)) with (switch) and @ay<="2002"	US-PGPUB; USPAT; EPO; DERWENT; IBM_TDB	OR	ON	2012/05/03 14:13
S53	0	(application) with data with (second near2 (set subset)) with (toggle) and @ay<="2002"	US-PGPUB; USPAT; EPO; DERWENT; IBM_TDB	OR	ON	2012/05/03 14:14
S54	41014	file near type (second near2 (set subset)) with (toggle) and @ay<="2002"	US-PGPUB; USPAT; EPO; DERWENT; IBM_TDB	OR	ON	2012/05/03 14:14
S55	0	file near type with (second near2 (set subset)) with (toggle) and @ay<="2002"	US-PGPUB; USPAT; EPO; DERWENT; IBM_TDB	OR	ON	2012/05/03 14:14
S56	2	file near type with (toggle) and @ay<="2002"	US-PGPUB; USPAT;	OR	ON	2012/05/03 14:14

			EPO; DERWENT; IBM_TDB			
S57	44	file near type with (switch) and @ay<="2002"	US-PGPUB; USPAT; EPO; DERWENT; IBM_TDB	OR	ON	2012/05/03 14:15
S58	3	"20080120576"	US-PGPUB; USPAT; EPO; DERWENT; IBM_TDB	OR	ON	2012/05/03 17:57
S59	2	"20080198178"	US-PGPUB; USPAT; EPO; DERWENT; IBM_TDB	OR	ON	2012/05/03 18:00
S60	42	zoom with circ$8 with boundary	US-PGPUB; USPAT; EPO; DERWENT; IBM_TDB	OR	ON	2012/05/03 18:01
S61	22	zoom with circ$8 with boundary and @ay<="2001"	US-PGPUB; USPAT; EPO; DERWENT; IBM_TDB	OR	ON	2012/05/03 18:01
S62	26	zoom with circ$8 with boundary and @ay<="2003"	US-PGPUB; USPAT; EPO; DERWENT; IBM_TDB	OR	ON	2012/05/03 18:01
S63	0	zoom$7 with circ$8 with boundary and @ay<="2003" and "715"/$.ccls.	US-PGPUB; USPAT; EPO; DERWENT; IBM_TDB	OR	ON	2012/05/03 18:01
S64	0	zoom$7 with clockwise with boundary and @ay<="2003" and "715"/$.ccls.	US-PGPUB; USPAT; EPO; DERWENT; IBM_TDB	OR	ON	2012/05/03 18:02
S65	0	zoom$7 with clockwise same boundary and @ay<="2003" and "715"/$.ccls.	US-PGPUB; USPAT; EPO; DERWENT; IBM_TDB	OR	ON	2012/05/03 18:02
S66	2	zoom$7 with circ$7 same boundary and @ay<="2003" and "715"/$.ccls.	US-PGPUB; USPAT; EPO; DERWENT; IBM_TDB	OR	ON	2012/05/03 18:02
S67	5	zoom$7 with (clockwise radial circ$7) same2 (perimter boundary) and @ay<="2003" and "715"/$.ccls.	US-PGPUB; USPAT; EPO; DERWENT; IBM_TDB	OR	ON	2012/05/03 18:04
S68	26	("20010009428" | "20020085037" | "20020101458" | "20020122072" |	US-PGPUB; USPAT;	OR	ON	2012/05/03 18:05

		"20040021647" | "4931783" | "5276795" | "5581670" | "5627960" | "5634064" | "5638523" | "5666499" | "5689667" | "5760773" | "5798752" | "6037937" | "6097387" | "6118427" | "6246411" | "6262719" | "6369837" | "6549219" | "6865719" | "6918091" | "6938221" | "7058902").PN.	USOCR			
S69	110	("5638523").URPN.	USPAT	OR	ON	2012/05/03 18:06
S70	0	lock with help with clock with setting	USPAT	OR	ON	2012/05/03 21:16
S71	1	"6346935".pn.	USPAT	OR	ON	2012/05/03 21:17
S72	6	"20040021643"	US-PGPUB; USPAT; EPO; JPO; DERWENT; IBM_TDB	OR	ON	2012/05/03 21:18
S73	2	"20020027549"	US-PGPUB; USPAT; EPO; JPO; DERWENT; IBM_TDB	OR	ON	2012/05/03 21:19
S74	0	profile with application with each with user	US-PGPUB; USPAT; EPO; JPO; DERWENT; IBM_TDB	OR	ON	2012/05/03 21:47
S75	16148	profile with application with user	US-PGPUB; USPAT; EPO; JPO; DERWENT; IBM_TDB	OR	ON	2012/05/03 21:47
S76	339	profile with application with multiple near3 user	US-PGPUB; USPAT; EPO; JPO; DERWENT; IBM_TDB	OR	ON	2012/05/03 21:47
S77	43	profile with application with multiple near3 user and "715"/$.ccls.	US-PGPUB; USPAT; EPO; JPO; DERWENT; IBM_TDB	OR	ON	2012/05/03 21:47
S78	1	profile with icons with multiple near3 user and "715"/$.ccls.	US-PGPUB; USPAT; EPO; JPO; DERWENT; IBM_TDB	OR	ON	2012/05/03 21:51
S79	38	(application software program apps widgets) with multiple near3 user near3 profile and "715"/$.ccls.	US-PGPUB; USPAT; EPO; JPO; DERWENT; IBM_TDB	OR	ON	2012/05/03 21:52
S80	2	"5914709".pn.	US-PGPUB; USPAT; EPO; JPO; DERWENT; IBM_TDB	OR	ON	2012/05/03 22:05

S81	2	"6292179".pn.	US-PGPUB; USPAT; EPO; JPO; DERWENT; IBM_TDB	OR	ON	2012/05/03 22:05
S82	2	"5618232".pn.	US-PGPUB; USPAT; EPO; JPO; DERWENT; IBM_TDB	OR	ON	2012/05/03 22:06
S83	2	"20050253818"	US-PGPUB; USPAT; EPO; JPO; DERWENT; IBM_TDB	OR	ON	2012/05/03 22:06
S84	2	"7030861".pn.	US-PGPUB; USPAT; EPO; JPO; DERWENT; IBM_TDB	OR	ON	2012/05/03 22:07
S85	2	"5603053".pn.	US-PGPUB; USPAT; EPO; JPO; DERWENT; IBM_TDB	OR	ON	2012/05/03 22:07
S86	64	"240336"	US-PGPUB; USPAT; EPO; DERWENT; IBM_TDB	OR	ON	2012/05/03 22:31
S87	2	"240336"	EPO	OR	ON	2012/05/03 22:31
S88	1	"20070252822"	US-PGPUB; USPAT; USOCR	OR	ON	2012/05/09 09:52
S89	1	"20100056221"	US-PGPUB; USPAT; USOCR	OR	ON	2012/05/09 10:00
S90	3	"7475333"	US-PGPUB; USPAT; USOCR	OR	ON	2012/05/09 11:08
S91	1	"20060236264"	US-PGPUB; USPAT; USOCR	OR	ON	2012/05/09 14:13
S92	1	"5933141".pn.	US-PGPUB; USPAT; USOCR	OR	ON	2012/05/09 14:28
S93	1	"20090328122"	US-PGPUB; USPAT; USOCR	OR	ON	2012/05/09 15:05
S94	1	"20080261569"	US-PGPUB; USPAT; USOCR	OR	ON	2012/05/09 15:29
S95	1	"7797226".pn.	US-PGPUB; USPAT; USOCR	OR	ON	2012/05/09 15:57
S96	1	"5347295".pn.	US-PGPUB; USPAT;	OR	ON	2012/05/10 13:54

			USOCR			
S97	1	"5491495".pn.	US-PGPUB; USPAT; USOCR	OR	ON	2012/05/10 14:19
S98	1	"6954904".pn.	US-PGPUB; USPAT; USOCR	OR	ON	2012/05/10 18:16
S99	561	simics	US-PGPUB; USPAT; USOCR	OR	ON	2012/05/10 19:13
S100	1	simics and virtutech.as.	US-PGPUB; USPAT; USOCR	OR	ON	2012/05/10 19:13
S101	3	simics and "715"/$.ccls.	US-PGPUB; USPAT; USOCR	OR	ON	2012/05/10 19:13
S102	10	swipe with home near screen	US-PGPUB; USPAT; EPO; DERWENT; IBM_TDB	OR	ON	2012/09/11 15:10
S103	42	(gesture glide flick swipe) with home near screen	US-PGPUB; USPAT; EPO; DERWENT; IBM_TDB	OR	ON	2012/09/11 15:11
S104	0	(gesture glide flick swipe) with home near screen and @ay<="2002"	US-PGPUB; USPAT; EPO; DERWENT; IBM_TDB	OR	ON	2012/09/11 15:12
S105	99	(gesture glide flick swipe) with home and @ay<="2002"	US-PGPUB; USPAT; EPO; DERWENT; IBM_TDB	OR	ON	2012/09/11 15:12
S106	16	("5500935" | "5760773" | "20060267966" | "20050050476" | "20040021643" | "20050134578" | "5926178" | "20050190147").PN.	US-PGPUB; USPAT; EPO; DERWENT; IBM_TDB	OR	ON	2012/09/11 15:15
S107	453	activat$7 with home near3 (state screen)	US-PGPUB; USPAT; EPO; DERWENT; IBM_TDB	OR	ON	2012/09/11 15:21
S108	3	activat$7 with home near3 (state screen) with (gesture flick swipe finger glide)	US-PGPUB; USPAT; EPO; DERWENT; IBM_TDB	OR	ON	2012/09/11 15:21
S109	8615	activat$7 with (gesture flick swipe finger glide) and @ay<="2002"	US-PGPUB; USPAT; EPO; DERWENT; IBM_TDB	OR	ON	2012/09/11 15:24
S110	50	activat$7 with (gesture flick swipe finger glide) with icon and @ay<="2002"	US-PGPUB; USPAT; EPO;	OR	ON	2012/09/11 15:25

			DERWENT; IBM_TDB			
S111	5	("5345543" | "5347295" | "5386219" | "5398310" | "5404442").PN.	US-PGPUB; USPAT; USOCR	OR	ON	2012/09/11 15:33
S112	76	(start activat$7 switch) with (drag dragging slide sliding swiping gliding gesture flick swipe finger glide) with (home main idle start) near3 (screen page) and @ay<="2002"	US-PGPUB; USPAT; EPO; DERWENT; IBM_TDB	OR	ON	2012/09/11 15:40
S113	101	(start activat$7 switch) with (drag dragging slide sliding swiping gliding gesture flick swipe finger glide stroke) with (home main idle start) near3 (screen page) and @ay<="2002"	US-PGPUB; USPAT; EPO; DERWENT; IBM_TDB	OR	ON	2012/09/11 15:47
S114	2	"7657849".pn.	US-PGPUB; USPAT; EPO; DERWENT; IBM_TDB	OR	ON	2012/09/11 15:49
S115	47	("20010011308" | "20010012022" | "20020015024" | "20020196274" | "20030142138" | "20040030934" | "20040034801" | "20040085351" | "20040088568" | "20040230843" | "20040250138" | "20040260955" | "20040268267" | "20050050477" | "20050060554" | "20050079896" | "20050212760" | "20050216862" | "20050248542" | "20050253817" | "20050264833" | "20060174339" | "20060267955" | "20080034292" | "20080072172" | "5465084" | "5559961" | "5677710" | "5821933" | "5907327" | "6151208" | "6160555" | "6192478" | "6249606" | "6323846" | "6347290" | "6421453" | "6570557" | "6573883" | "6633310" | "6677932" | "6720860" | "6735695" | "7124433" | "7151843" | "7174462" | "7263670").PN.	US-PGPUB; USPAT; USOCR	OR	ON	2012/09/11 15:49
S116	0	(shortcut) with (drag dragging slide sliding swiping gliding gesture flick swipe finger glide stroke) with (home main idle start) near3 (screen page) and @ay<="2002"	US-PGPUB; USPAT; EPO; DERWENT; IBM_TDB	OR	ON	2012/09/11 15:56
S117	0	(short$cut) with (drag dragging slide sliding swiping gliding gesture flick swipe finger glide stroke) with (home main idle start) near3 (screen page) and @ay<="2002"	US-PGPUB; USPAT; EPO; DERWENT; IBM_TDB	OR	ON	2012/09/11 15:56
S118	114	(short$cut) with (drag dragging slide sliding swiping gliding gesture flick swipe finger glide stroke) and @ay<="2002"	US-PGPUB; USPAT; EPO; DERWENT; IBM_TDB	OR	ON	2012/09/11 15:56
S119	2	"20080010294"	US-PGPUB; USPAT; EPO;	OR	ON	2012/09/12 11:58

			DERWENT; IBM_TDB			
S120	766	(trend trending) with tag	US-PGPUB; USPAT; EPO; DERWENT; IBM_TDB	OR	ON	2012/09/12 12:05
S121	20	(trend trending) with tag and "715"/$.ccls.	US-PGPUB; USPAT; EPO; DERWENT; IBM_TDB	OR	ON	2012/09/12 12:05
S122	3	(trend trending) with tag same (alert notif$7 indicat$7) and "715"/$.ccls.	US-PGPUB; USPAT; EPO; DERWENT; IBM_TDB	OR	ON	2012/09/12 12:07
S123	2	"20090292723"	US-PGPUB; USPAT; EPO; DERWENT; IBM_TDB	OR	ON	2012/09/12 14:14
S124	3	"20080178067"	US-PGPUB; USPAT; EPO; DERWENT; IBM_TDB	OR	ON	2012/09/12 14:22
S125	107	"5276785"	US-PGPUB; USPAT; EPO; DERWENT; IBM_TDB	OR	ON	2012/09/13 12:24
S126	2	"5276785".pn.	US-PGPUB; USPAT; EPO; DERWENT; IBM_TDB	OR	ON	2012/09/13 12:24
S127	3	"20080040668"	US-PGPUB; USPAT; EPO; DERWENT; IBM_TDB	OR	ON	2012/09/13 12:59
S128	25	email with automatic with (greetin signature)	US-PGPUB; USPAT; EPO; DERWENT; IBM_TDB	OR	ON	2012/09/13 13:15
S129	59	email with automatic with (greeting signature)	US-PGPUB; USPAT; EPO; DERWENT; IBM_TDB	OR	ON	2012/09/13 13:18
S130	3	"20080040668"	US-PGPUB; USPAT; EPO; DERWENT; IBM_TDB	OR	ON	2012/09/13 13:35
S131	2	"20100191701"	US-PGPUB; USPAT; EPO;	OR	ON	2012/09/13 13:35

			DERWENT; IBM_TDB			
S132	2	"20100191701"	US-PGPUB; USPAT; EPO; DERWENT; IBM_TDB	OR	ON	2012/09/13 13:41
S133	3	"20070263822"	US-PGPUB; USPAT; EPO; DERWENT; IBM_TDB	OR	ON	2012/09/13 14:56
S134	2	"20080082627"	US-PGPUB; USPAT; EPO; DERWENT; IBM_TDB	OR	ON	2012/09/13 15:31
S135	2	"20060149630"	US-PGPUB; USPAT; EPO; DERWENT; IBM_TDB	OR	ON	2012/09/13 15:31
S136	101	(start activat$7 switch launch) with (drag dragging slide sliding swiping gliding gesture flick swipe finger glide stroke) with (home main idle start) near3 (screen page) and @ay<="2002"	US-PGPUB; USPAT; EPO; DERWENT; IBM_TDB	OR	ON	2012/09/14 10:44
S137	364	(start activat$7 switch launch) with (drag dragging slide sliding swiping gliding gesture flick swipe glide stroke) with (icon) and @ay<="2002"	US-PGPUB; USPAT; EPO; DERWENT; IBM_TDB	OR	ON	2012/09/14 10:51
S138	2225	(start activat$7 switch launch) with (drag dragging slide sliding swiping gliding gesture flick swipe glide stroke) with (edge) and @ay<="2002"	US-PGPUB; USPAT; EPO; DERWENT; IBM_TDB	OR	ON	2012/09/14 10:58
S139	5	(start activat$7 switch launch) with (drag dragging slide sliding swiping gliding gesture flick swipe glide stroke) with (edge corner) near screen and @ay<="2002"	US-PGPUB; USPAT; EPO; DERWENT; IBM_TDB	OR	ON	2012/09/14 10:59
S140	11	(start activat$7 switch launch) with (drag dragging slide sliding swiping gliding gesture flick swipe glide stroke) with (edge corner) near3 screen and @ay<="2002"	US-PGPUB; USPAT; EPO; DERWENT; IBM_TDB	OR	ON	2012/09/14 11:00
S141	30	(start activat$7 switch launch) with (drag dragging slide sliding swiping gliding gesture flick swipe glide stroke) with (edge corner) and "715"/$.ccls. and @ay<="2002"	US-PGPUB; USPAT; EPO; DERWENT; IBM_TDB	OR	ON	2012/09/14 11:03
S142	16	("20020063696" | "20020109677" | "5644628" | "5745116" | "5943039" | "6037937" | "6310610" | "6618063").PN.	US-PGPUB; USPAT; EPO; DERWENT; IBM_TDB	OR	ON	2012/09/14 11:54
S143	2	("8127141").PN.	US-PGPUB; USPAT;	OR	ON	2012/09/14 12:02

			EPO; DERWENT; IBM_TDB			
S144	2	swipe near gesture and @ay<="2002"	US-PGPUB; USPAT; EPO; DERWENT; IBM_TDB	OR	ON	2012/09/14 12:03
S145	1141	(start activat$7 switch launch) with (drag dragging slide sliding swiping gliding gesture flick swipe glide stroke) and "715"/$.ccls. and @ay<="2002"	US-PGPUB; USPAT; EPO; DERWENT; IBM_TDB	OR	ON	2012/09/14 12:10
S146	437	(activat$7 switch launch) with (slide sliding swiping gliding gesture flick swipe glide stroke) and "715"/$.ccls. and @ay<="2002"	US-PGPUB; USPAT; EPO; DERWENT; IBM_TDB	OR	ON	2012/09/14 12:10
S147	350	(activat$7 switch launch) with (slide sliding swiping gliding flick swipe glide stroke) and "715"/$.ccls. and @ay<="2002"	US-PGPUB; USPAT; EPO; DERWENT; IBM_TDB	OR	ON	2012/09/14 12:11
S148	206	(activat$7 switch launch) with (slide sliding swiping gliding flick swipe glide) and "715"/$.ccls. and @ay<="2002"	US-PGPUB; USPAT; EPO; DERWENT; IBM_TDB	OR	ON	2012/09/14 12:11
S149	56	(activat$7 switch launch) with (sliding swiping gliding flick swipe glide) and "715"/$.ccls. and @ay<="2002"	US-PGPUB; USPAT; EPO; DERWENT; IBM_TDB	OR	ON	2012/09/14 12:11
S150	0	(activat$7 switch launch) with (sliding swiping gliding flick swipe glide) same desk with accessories and "715"/$.ccls. and @ay<="2002"	US-PGPUB; USPAT; EPO; DERWENT; IBM_TDB	OR	ON	2012/09/14 15:31
S151	0	(activat$7 switch launch) with (sliding swiping gliding flick swipe glide) same desk with "accessories." and @ay<="2002"	US-PGPUB; USPAT; EPO; DERWENT; IBM_TDB	OR	ON	2012/09/14 15:31
S152	1	(activat$7 switch launch) with (sliding swiping gliding flick swipe glide) same desk with accessories and @ay<="2002"	US-PGPUB; USPAT; EPO; DERWENT; IBM_TDB	OR	ON	2012/09/14 15:31
S153	14905	"swipe!"	US-PGPUB; USPAT; EPO; DERWENT; IBM_TDB	OR	ON	2012/09/14 15:31
S154	0	"swipe" with DA	US-PGPUB; USPAT; EPO; DERWENT; IBM_TDB	OR	ON	2012/09/14 15:32
S155	0	"swipe" with Desk near accessor$6	US-PGPUB; USPAT;	OR	ON	2012/09/14 15:32

			EPO; DERWENT; IBM_TDB			
S156	0	launch with desk near accessor$6	US-PGPUB; USPAT; EPO; DERWENT; IBM_TDB	OR	ON	2012/09/14 15:32
S157	0	shortcut with (sliding swiping gliding flick swipe glide) and "715"/$.ccls. and @ay<="2002"	US-PGPUB; USPAT; EPO; DERWENT; IBM_TDB	OR	ON	2012/09/14 15:33
S158	2	short$cut with (sliding swiping gliding flick swipe glide) and "715"/$.ccls. and @ay<="2002"	US-PGPUB; USPAT; EPO; DERWENT; IBM_TDB	OR	ON	2012/09/14 15:34
S159	1007	(home desktop) with (sliding swiping gliding flick swipe glide) and @ay<="2002"	US-PGPUB; USPAT; EPO; DERWENT; IBM_TDB	OR	ON	2012/09/17 12:55
S160	8	(home desktop) with (sliding swiping gliding flick swipe glide) and @ay<="2002" and "715"/$.ccls.	US-PGPUB; USPAT; EPO; DERWENT; IBM_TDB	OR	ON	2012/09/17 12:55
S161	0	(home desktop) with (sliding swiping gliding flick swipe glide) with (activat$6 launch short$cut) and @ay<="2002" and "715"/$.ccls.	US-PGPUB; USPAT; EPO; DERWENT; IBM_TDB	OR	ON	2012/09/17 13:31
S162	17	(home desktop) with (sliding swiping gliding flick swipe glide) with (activat$6 launch short$cut) and @ay<="2002"	US-PGPUB; USPAT; EPO; DERWENT; IBM_TDB	OR	ON	2012/09/17 13:31
S163	27	(sliding swiping gliding flick swipe glide) with (activat$6 launch short$cut) and @ay<="2002" and "715"/$.ccls.	US-PGPUB; USPAT; EPO; DERWENT; IBM_TDB	OR	ON	2012/09/17 13:32
S164	81	"5886697"	US-PGPUB; USPAT; EPO; DERWENT; IBM_TDB	OR	ON	2012/09/17 13:50
S165	2	"5886697".pn.	US-PGPUB; USPAT; EPO; DERWENT; IBM_TDB	OR	ON	2012/09/17 13:50
S166	19034809	(activat$7 switch launch) with (app application software icon) with "not" with (click tap)@ay<="2002"	US-PGPUB; USPAT; EPO; DERWENT; IBM_TDB	OR	ON	2012/09/17 14:46
S167	0	(activat$7 switch launch) with (app application software icon) with "not"	US-PGPUB; USPAT;	OR	ON	2012/09/17 14:46

		with (click tap) and @ay<="2002"	EPO; DERWENT; IBM_TDB			
S168	0	(activat$7 switch launch) with "not" with (click tap) and @ay<="2002"	US-PGPUB; USPAT; EPO; DERWENT; IBM_TDB	OR	ON	2012/09/17 14:46
S169	0	(activat$7 switch launch) with "not" with (click clicking tap tapping) and @ay<="2002"	US-PGPUB; USPAT; EPO; DERWENT; IBM_TDB	OR	ON	2012/09/17 14:46
S170	0	(activat$7 launch) with "not" with (click clicking tap tapping) and @ay<="2002"	US-PGPUB; USPAT; EPO; DERWENT; IBM_TDB	OR	ON	2012/09/17 14:47
S171	135	(activat$7 launch) with (alone "not" "without") with (click clicking tap tapping) and @ay<="2002"	US-PGPUB; USPAT; EPO; DERWENT; IBM_TDB	OR	ON	2012/09/17 14:47
S172	23	("20020087661" | "20030200505" | "5600778" | "5689667" | "5721853" | "5745116" | "5790115" | "5805167" | "6028271" | "6057844" | "6094197" | "6101498" | "6104400" | "6239803" | "6337698" | "6429846" | "6445383" | "6496206" | "6618063" | "6707443" | "6819345" | "6915489" | "7003734").PN.	US-PGPUB; USPAT; USOCR	OR	ON	2012/09/17 15:04
S173	16	("20020063696" | "20020109677" | "5745116" | "5943039" | "6037937" | "6310610" | "6618063" | "7199786").PN.	US-PGPUB; USPAT; EPO; DERWENT; IBM_TDB	OR	ON	2013/02/21 12:48
S174	2	"5406307".pn.	US-PGPUB; USPAT; EPO; DERWENT; IBM_TDB	OR	ON	2013/02/21 12:51
S175	166	(home) near (screen state) with transition	US-PGPUB; USPAT; EPO; DERWENT; IBM_TDB	OR	ON	2013/02/21 13:14
S176	31	(home) near (screen state) with transition and "715"/$.ccls.	US-PGPUB; USPAT; EPO; DERWENT; IBM_TDB	OR	ON	2013/02/21 13:27
S177	2	"8127141".pn.	US-PGPUB; USPAT; EPO; DERWENT; IBM_TDB	OR	ON	2013/02/21 13:30
S178	10	("20010009583" | "5465084" | "5588056" | "5699514" | "5928364"	US-PGPUB; USPAT;	OR	ON	2013/02/21 13:31

		| "5991882" | "6212638" | "6253248" | "6574377" | "7219368").PN.	USOCR			
S179	467	disable near touch	US-PGPUB; USPAT; USOCR	OR	ON	2013/02/21 13:33
S180	3422	"20080903"	US-PGPUB; USPAT; USOCR	OR	ON	2013/02/21 13:39
S181	3289	"20080903"	EPO	OR	ON	2013/02/21 13:39
S182	0	"200800903"	EPO	OR	ON	2013/02/21 13:39
S183	0	"200800903"	US-PGPUB; USPAT; EPO; IBM_TDB	OR	ON	2013/02/21 13:39
S184	0	"2007150842"	US-PGPUB; USPAT; EPO; IBM_TDB	OR	ON	2013/02/21 13:40
S185	2	"20070150842"	US-PGPUB; USPAT; EPO; IBM_TDB	OR	ON	2013/02/21 13:40
S186	0	"20050322549"	US-PGPUB; USPAT; EPO; IBM_TDB	OR	ON	2013/02/21 13:41
S187	0	"200500322549"	US-PGPUB; USPAT; EPO; IBM_TDB	OR	ON	2013/02/21 13:41
S188	0	"20050322549"	US-PGPUB; USPAT; EPO; DERWENT; IBM_TDB	OR	ON	2013/02/21 13:41
S189	34	"6392999"	US-PGPUB; USPAT; EPO; DERWENT; IBM_TDB	OR	ON	2013/02/21 13:46
S190	2	"6392999".pn.	US-PGPUB; USPAT; EPO; DERWENT; IBM_TDB	OR	ON	2013/02/21 13:46
S191	2	"5619555".pn.	US-PGPUB; USPAT; EPO; DERWENT; IBM_TDB	OR	ON	2013/02/21 13:48
S192	69	"5644628"	US-PGPUB; USPAT; EPO; DERWENT; IBM_TDB	OR	ON	2013/02/21 13:49

S193	2	"5644628".pn.	US-PGPUB; USPAT; EPO; DERWENT; IBM_TDB	OR	ON	2013/02/21 13:49
S194	2	"5701340".pn.	US-PGPUB; USPAT; EPO; DERWENT; IBM_TDB	OR	ON	2013/02/21 13:49
S195	2	"6570557".pn.	US-PGPUB; USPAT; EPO; DERWENT; IBM_TDB	OR	ON	2013/02/21 13:50
S196	0	"67271932".pn.	US-PGPUB; USPAT; EPO; DERWENT; IBM_TDB	OR	ON	2013/02/21 13:57
S197	141	(UI GUI) with lock and "715"/$.ccls.	US-PGPUB; USPAT; EPO; DERWENT; IBM_TDB	OR	ON	2013/02/21 14:04
S198	34	(UI GUI) with lock and "715"/$.ccls. and @ay<="2002"	US-PGPUB; USPAT; EPO; DERWENT; IBM_TDB	OR	ON	2013/02/21 14:09
S199	147	(UI GUI screen) with lock and "715"/$.ccls. and @ay<="2002"	US-PGPUB; USPAT; EPO; DERWENT; IBM_TDB	OR	ON	2013/02/21 14:09
S200	6	(UI GUI screen) with (unlock lock) same (gesture slide glide swipe) and "715"/$.ccls. and @ay<="2002"	US-PGPUB; USPAT; EPO; DERWENT; IBM_TDB	OR	ON	2013/02/21 14:10
S201	11	(UI GUI screen state) with (home) same (gesture slide glide swipe) and "715"/$.ccls. and @ay<="2002"	US-PGPUB; USPAT; EPO; DERWENT; IBM_TDB	OR	ON	2013/02/21 14:15
S202	44	(UI GUI screen state) with (main home) same (gesture slide glide swipe) and "715"/$.ccls. and @ay<="2002"	US-PGPUB; USPAT; EPO; DERWENT; IBM_TDB	OR	ON	2013/02/21 14:15
S203	2	(UI GUI screen state) with (unlock) same (gesture slide glide swipe) and "715"/$.ccls. and @ay<="2002"	US-PGPUB; USPAT; EPO; DERWENT; IBM_TDB	OR	ON	2013/02/21 14:23
S204	39	(UI GUI screen state) with (unlock) and "715"/$.ccls. and @ay<="2002"	US-PGPUB; USPAT; EPO; DERWENT; IBM_TDB	OR	ON	2013/02/21 14:27

S205	236	(UI GUI screen state) with (lock) and "715"/$.ccls. and @ay<="2002"	US-PGPUB; USPAT; EPO; DERWENT; IBM_TDB	OR	ON	2013/02/21 14:27
S206	0	(UI GUI screen state) with (lock) with remove and "715"/$.ccls. and @ay<="2002"	US-PGPUB; USPAT; EPO; DERWENT; IBM_TDB	OR	ON	2013/02/21 14:27
S207	236	(UI GUI screen state) with (lock) and "715"/$.ccls. and @ay<="2002"	US-PGPUB; USPAT; EPO; DERWENT; IBM_TDB	OR	ON	2013/02/21 14:27
S208	2	(UI GUI screen state) with (lock) with blank and "715"/$.ccls. and @ay<="2002"	US-PGPUB; USPAT; EPO; DERWENT; IBM_TDB	OR	ON	2013/02/21 14:28
S209	236	(UI GUI screen state) with (lock) and "715"/$.ccls. and @ay<="2002"	US-PGPUB; USPAT; EPO; DERWENT; IBM_TDB	OR	ON	2013/02/21 14:30
S210	2	"6812940".pn.	US-PGPUB; USPAT; EPO; DERWENT; IBM_TDB	OR	ON	2013/02/21 14:54
S211	3	("4825019" | "5825353" | "6408191").PN.	US-PGPUB; USPAT; USOCR	OR	ON	2013/02/21 14:54
S212	5	(unlock) same (gesture slide glide swipe) and "715"/$.ccls. and @ay<="2002"	US-PGPUB; USPAT; EPO; DERWENT; IBM_TDB	OR	ON	2013/02/21 15:02
S213	17	(unlock) same2 (gesture slide glide swipe) and "715"/$.ccls. and @ay<="2002"	US-PGPUB; USPAT; EPO; DERWENT; IBM_TDB	OR	ON	2013/02/21 15:03
S214	32	(log$in) same2 (gesture slide glide swipe) and "715"/$.ccls. and @ay<="2002"	US-PGPUB; USPAT; EPO; DERWENT; IBM_TDB	OR	ON	2013/02/21 15:05
S215	2	(log$in) with (gesture slide glide swipe) and "715"/$.ccls. and @ay<="2002"	US-PGPUB; USPAT; EPO; DERWENT; IBM_TDB	OR	ON	2013/02/21 15:05
S216	93768	(log$in) with2 (gesture slide glide swipe) and "715"/$.ccls. and @ay<="2002"	US-PGPUB; USPAT; EPO; DERWENT; IBM_TDB	OR	ON	2013/02/21 15:06
S217	10	(log$in) same (gesture slide glide swipe) and "715"/$.ccls. and	US-PGPUB; USPAT;	OR	ON	2013/02/21 15:06

		@ay<="2002"	EPO; DERWENT; IBM_TDB			
S218	519381	grid (gesture slide glide swipe) and "715"/$.ccls. and @ay<="2002"	US-PGPUB; USPAT; EPO; DERWENT; IBM_TDB	OR	ON	2013/02/21 15:08
S219	15	grid with (gesture slide glide swipe) and "715"/$.ccls. and @ay<="2002"	US-PGPUB; USPAT; EPO; DERWENT; IBM_TDB	OR	ON	2013/02/21 15:08
S220	10198	expan$7 with vertical with horizontal	US-PGPUB; USPAT; EPO; DERWENT; IBM_TDB	OR	ON	2013/02/22 11:06
S221	13124	expan$7 with vertical$4 with horizontal$4	US-PGPUB; USPAT; EPO; DERWENT; IBM_TDB	OR	ON	2013/02/22 11:06
S222	250	expan$7 with vertical$4 with horizontal$4 and "715"/$.ccls.	US-PGPUB; USPAT; EPO; DERWENT; IBM_TDB	OR	ON	2013/02/22 11:06
S223	2	expan$7 with vertical$4 with horizontal$4 with toggle and "715"/$.ccls.	US-PGPUB; USPAT; EPO; DERWENT; IBM_TDB	OR	ON	2013/02/22 11:12
S224	3	expan$7 with vertical$4 with horizontal$4 with (switch toggle) and "715"/$.ccls.	US-PGPUB; USPAT; EPO; DERWENT; IBM_TDB	OR	ON	2013/02/22 11:14
S225	14	menu with vertical$4 with horizontal$4 with (switch toggle) and "715"/$.ccls.	US-PGPUB; USPAT; EPO; DERWENT; IBM_TDB	OR	ON	2013/02/22 11:15
S226	2	menu with inline with (switch toggle) and "715"/$.ccls.	US-PGPUB; USPAT; EPO; DERWENT; IBM_TDB	OR	ON	2013/02/22 11:21
S227	1	(pop$out side) with inline with (switch toggle) and "715"/$.ccls.	US-PGPUB; USPAT; EPO; DERWENT; IBM_TDB	OR	ON	2013/02/22 11:22
S228	1	(pop$out side) with inline with (switch toggle orientation) and "715"/$.ccls.	US-PGPUB; USPAT; EPO; DERWENT; IBM_TDB	OR	ON	2013/02/22 11:22
S229	12	(pop$out side) with expan$7 with (switch toggle orientation) and	US-PGPUB; USPAT;	OR	ON	2013/02/22 11:24

		"715"/$.ccls.	EPO; DERWENT; IBM_TDB			
S230	18	(horizontal vertical side) with expan$7 with (switch toggle orientation) and "715"/$.ccls.	US-PGPUB; USPAT; EPO; DERWENT; IBM_TDB	OR	ON	2013/02/22 11:25
S231	24	(horizontal$ vertical$ side) with expan$7 with (switch toggle orientation) and "715"/$.ccls.	US-PGPUB; USPAT; EPO; DERWENT; IBM_TDB	OR	ON	2013/02/22 11:25
S232	6	("2005/0149873").URPN.	USPAT	OR	ON	2013/02/22 11:26
S233	1	pitaro.xa,xp. and expan$7 with horizont$7	USPAT	OR	ON	2013/02/22 11:28
S234	68	pitaro.xa,xp. and expan$7	USPAT	OR	ON	2013/02/22 11:29
S235	34	pitaro.xa,xp. and (tree hiearch$6)	USPAT	OR	ON	2013/02/22 11:36
S236	36	pitaro.xa,xp. and horizont$5 with vertical$6	USPAT	OR	ON	2013/02/22 11:38
S237	36	tree same horizont$7 with vertical$7 with expan$7	USPAT	OR	ON	2013/02/22 11:40
S238	64	tree same horizont$7 with vertical$7 with expan$7	US-PGPUB; USPAT; DERWENT; IBM_TDB	OR	ON	2013/02/22 11:40
S239	16	tree same horizont$7 with vertical$7 with expan$7 and "715"/$.ccls.	US-PGPUB; USPAT; DERWENT; IBM_TDB	OR	ON	2013/02/22 11:41
S240	3	Pitaro.xa,xp. and pivot	US-PGPUB; USPAT; DERWENT; IBM_TDB	OR	ON	2013/02/22 11:41
S241	2124	(hierach$8 tree) with pivot	US-PGPUB; USPAT; DERWENT; IBM_TDB	OR	ON	2013/02/22 11:42
S242	8	(hierach$8 tree) with pivot and "715"/$.ccls.	US-PGPUB; USPAT; DERWENT; IBM_TDB	OR	ON	2013/02/22 11:42
S243	196	(hierach$8 tree) and pivot and "715"/$.ccls.	US-PGPUB; USPAT; DERWENT; IBM_TDB	OR	ON	2013/02/22 11:44
S244	28	(hierach$8 tree) and pivot near point and "715"/$.ccls.	US-PGPUB; USPAT; DERWENT; IBM_TDB	OR	ON	2013/02/22 11:44
S245	3	(propagat$ interpolat$6 infer$8) with keyframes with (intermediate middle) and "715"/$.ccls.	US-PGPUB; USPAT; DERWENT; IBM_TDB	OR	ON	2013/02/22 11:51
S246	3	(propagat$ interpolat$6 infer$8) with	US-PGPUB;	OR	ON	2013/02/22

		key$frames with (intermediate middle) and "715"/$.ccls.	USPAT; DERWENT; IBM_TDB			11:52
S247	13	(propagat$ interpolat$6 infer$8) with (((r representative key) near frame) key$frames) with (intermediate middle) and "715"/$.ccls.	US-PGPUB; USPAT; DERWENT; IBM_TDB	OR	ON	2013/02/22 11:53
S248	54	overlap$7 with window with resize	US-PGPUB; USPAT; DERWENT; IBM_TDB	OR	ON	2013/02/22 12:02
S249	0	overlap$7 with window with resize same threshold	US-PGPUB; USPAT; DERWENT; IBM_TDB	OR	ON	2013/02/22 12:02
S250	133	overlap$7 with (object element window) with (size resize) same threshold	US-PGPUB; USPAT; DERWENT; IBM_TDB	OR	ON	2013/02/22 12:02
S251	11	overlap$7 with (object element window) with (size resize) same threshold and "715"/$.ccls.	US-PGPUB; USPAT; DERWENT; IBM_TDB	OR	ON	2013/02/22 12:04
S252	3	overlap$7 with (object element window) with (overlap$6) near2 threshold and "715"/$.ccls.	US-PGPUB; USPAT; DERWENT; IBM_TDB	OR	ON	2013/02/22 12:15
S253	3	(object element window) with (overlap$6) near2 threshold and "715"/$.ccls.	US-PGPUB; USPAT; DERWENT; IBM_TDB	OR	ON	2013/02/22 12:15
S254	139	grid with application with icons	US-PGPUB; USPAT; DERWENT; IBM_TDB	OR	ON	2013/02/22 12:23
S255	0	grid with application with icons and "7156"/$.ccls.	US-PGPUB; USPAT; DERWENT; IBM_TDB	OR	ON	2013/02/22 12:23
S256	54	grid with application with icons and "715"/$.ccls.	US-PGPUB; USPAT; DERWENT; IBM_TDB	OR	ON	2013/02/22 12:23
S257	2	"20060041848"	US-PGPUB; USPAT; DERWENT; IBM_TDB	OR	ON	2013/02/22 13:41
S258	3	"20050039137"	US-PGPUB; USPAT; DERWENT; IBM_TDB	OR	ON	2013/02/22 13:42
S259	2	"20020015064".pn.	US-PGPUB; USPAT; DERWENT; IBM_TDB	OR	ON	2013/02/24 21:32
S260	2	"20020015064"	US-PGPUB; USPAT; DERWENT; IBM_TDB	OR	ON	2013/02/24 21:33

S261	817	(swipe) near gesture	US-PGPUB; USPAT; DERWENT; IBM_TDB	OR	ON	2013/02/24 21:49
S262	390	(swipe) near gesture and "715"/$.ccls.	US-PGPUB; USPAT; DERWENT; IBM_TDB	OR	ON	2013/02/24 21:49
S263	2	(swipe) near gesture and "715"/$.ccls. and @ay<="2002"	US-PGPUB; USPAT; DERWENT; IBM_TDB	OR	ON	2013/02/24 21:49
S264	5	(swipe slide glide) near gesture and "715"/$.ccls. and @ay<="2002"	US-PGPUB; USPAT; DERWENT; IBM_TDB	OR	ON	2013/02/24 21:51
S265	6	(swipe slide glide) near3 gesture and "715"/$.ccls. and @ay<="2002"	US-PGPUB; USPAT; DERWENT; IBM_TDB	OR	ON	2013/02/24 21:52
S266	16	(swipe slide glide) with gesture and "715"/$.ccls. and @ay<="2002"	US-PGPUB; USPAT; DERWENT; IBM_TDB	OR	ON	2013/02/24 21:52
S267	0	(swipe slide glide) with away with icon and "715"/$.ccls. and @ay<="2002"	US-PGPUB; USPAT; DERWENT; IBM_TDB	OR	ON	2013/02/24 21:56
S268	26793	application with icon	US-PGPUB; USPAT; EPO; DERWENT; IBM_TDB	OR	ON	2013/02/24 22:13
S269	1722	application with icon with bar	US-PGPUB; USPAT; EPO; DERWENT; IBM_TDB	OR	ON	2013/02/24 22:13
S270	657	application with icon with bar and "715"/$.ccls.	US-PGPUB; USPAT; EPO; DERWENT; IBM_TDB	OR	ON	2013/02/24 22:13
S271	183	application with icon with bar and "715"/$.ccls. and @ay<="2002"	US-PGPUB; USPAT; EPO; DERWENT; IBM_TDB	OR	ON	2013/02/24 22:14
S272	62	lock with path and "715"/$.ccls.	US-PGPUB; USPAT; EPO; DERWENT; IBM_TDB	OR	ON	2013/02/24 22:15
S273	0	lock with path with trace and "715"/$.ccls.	US-PGPUB; USPAT; EPO; DERWENT; IBM_TDB	OR	ON	2013/02/24 22:18
S274	1	(unlock lock) with path with trace	US-PGPUB;	OR	ON	2013/02/24

		and "715"/$.ccls.	USPAT; EPO; DERWENT; IBM_TDB			22:18
S275	12	(unlock lock) with trace and "715"/$.ccls.	US-PGPUB; USPAT; EPO; DERWENT; IBM_TDB	OR	ON	2013/02/24 22:20
S276	2	"5559961".pn.	US-PGPUB; USPAT; EPO; DERWENT; IBM_TDB	OR	ON	2013/02/24 22:30
S277	252	graphical near password	US-PGPUB; USPAT; EPO; DERWENT; IBM_TDB	OR	ON	2013/02/24 22:30
S278	37	graphical near password and "715"/$.ccls.	US-PGPUB; USPAT; EPO; DERWENT; IBM_TDB	OR	ON	2013/02/24 22:30
S279	13	graphical near password and "715"/$.ccls. and @ay<="2002"	US-PGPUB; USPAT; EPO; DERWENT; IBM_TDB	OR	ON	2013/02/24 22:31
S280	81	("5559961").URPN.	USPAT	OR	ON	2013/02/24 22:34
S281	10	("20020029341" | "20040085351" | "20040245352" | "5406307" | "5559961" | "5796183" | "6209104" | "6476797" | "6720860" | "6862687").PN.	US-PGPUB; USPAT; USOCR	OR	ON	2013/02/24 22:41
S282	1	"7818691".pn.	US-PGPUB; USPAT; USOCR	OR	ON	2013/02/24 22:49
S283	114	main near menu with bar and "715"/$.ccls. and @ay<="2002"	US-PGPUB; USPAT; EPO; DERWENT; IBM_TDB	OR	ON	2013/02/25 10:39
S284	0	main near menu with bar and "715"/864.ccls. and @ay<="2002"	US-PGPUB; USPAT; EPO; DERWENT; IBM_TDB	OR	ON	2013/02/25 10:42
S285	85	bar and "715"/864.ccls. and @ay<="2002"	US-PGPUB; USPAT; EPO; DERWENT; IBM_TDB	OR	ON	2013/02/25 10:42
S286	146	mode and "715"/864.ccls. and @ay<="2002"	US-PGPUB; USPAT; EPO; DERWENT; IBM_TDB	OR	ON	2013/02/25 10:44

S287	0	"13345383"	USPAT	OR	OFF	2013/07/23 11:15
S288	646	threshold with distance with edge	USPAT	OR	OFF	2013/07/23 11:18
S289	24	threshold with distance with edge and "715"/$.ccls.	USPAT	OR	OFF	2013/07/23 11:18
S290	61	threshold with distance with edge and "715"/$.ccls.	US-PGPUB; USPAT; USOCR; EPO; DERWENT	OR	OFF	2013/07/23 11:19
S291	2	threshold with distance near second with edge and "715"/$.ccls.	US-PGPUB; USPAT; USOCR; EPO; DERWENT	OR	OFF	2013/07/23 11:21
S292	5	threshold with distance near2 second with edge and "715"/$.ccls.	US-PGPUB; USPAT; USOCR; EPO; DERWENT	OR	OFF	2013/07/23 11:22
S293	2	"7665043".pn.	US-PGPUB; USPAT; USOCR; EPO; DERWENT	OR	OFF	2013/07/23 11:41
S294	16	("5785439" | "5821930" | "5898434" | "6304261" | "6646633" | "7304638").PN.	US-PGPUB; USPAT; USOCR; EPO; DERWENT	OR	OFF	2013/07/23 11:44
S295	1	"20060156256"	USPAT	OR	OFF	2013/07/23 12:32
S296	1	"20050079896"	USPAT	OR	OFF	2013/07/23 12:33
S297	1	"5406307".PN.	USPAT	OR	OFF	2013/07/23 14:31
S298	1	"7665043".pn.	USPAT	OR	OFF	2013/07/23 14:49
S299	4	("20040085351" | "20050253817" | "20060012577" | "20060117197").PN.	US-PGPUB; USPAT; USOCR	OR	ON	2013/12/01 22:32
S300	7249	touch with strip	US-PGPUB; USPAT; FPRS; EPO; DERWENT	OR	ON	2013/12/01 22:33
S301	33	touch with strip with (drag slide glide) and @ay<="2002"	US-PGPUB; USPAT; FPRS; EPO; DERWENT	OR	ON	2013/12/01 22:35
S302	221	touch with (edge strip) with (drag slide glide) and @ay<="2002"	US-PGPUB; USPAT; FPRS; EPO; DERWENT	OR	ON	2013/12/01 22:36
S303	27	touch with (edge strip) with (drag	US-PGPUB;	OR	ON	2013/12/01

		slide glide) and @ay<="2002" and ("715"/$.ccls. "345"/$.ccls.)	USPAT; FPRS; EPO; DERWENT			22:36
S304	421	(edge strip) with (drag slide glide) and @ay<="2002" and ("715"/$.ccls. "345"/$.ccls.)	US-PGPUB; USPAT; FPRS; EPO; DERWENT	OR	ON	2013/12/01 22:40
S305	1226	(edge strip) with (drag slide glide swipe touch) and @ay<="2002" and ("715"/$.ccls. "345"/$.ccls.)	US-PGPUB; USPAT; FPRS; EPO; DERWENT	OR	ON	2013/12/01 22:40
S306	602	(edge strip) near3 (drag slide glide swipe touch) and @ay<="2002" and ("715"/$.ccls. "345"/$.ccls.)	US-PGPUB; USPAT; FPRS; EPO; DERWENT	OR	ON	2013/12/01 22:41
S307	5	(edge strip) near3 (drag slide glide swipe touch) same lock and @ay<="2002" and ("715"/$.ccls. "345"/$.ccls.)	US-PGPUB; USPAT; FPRS; EPO; DERWENT	OR	ON	2013/12/01 22:41
S308	2	(strip) with (drag slide glide swipe touch) same lock and @ay<="2002" and ("715"/$.ccls. "345"/$.ccls.)	US-PGPUB; USPAT; FPRS; EPO; DERWENT	OR	ON	2013/12/01 22:42
S309	20	(strip) with (drag slide glide swipe touch) with edge and @ay<="2002" and ("715"/$.ccls. "345"/$.ccls.)	US-PGPUB; USPAT; FPRS; EPO; DERWENT	OR	ON	2013/12/01 22:43
S310	2	(strip) with (drag slide glide swipe touch) with gesture and @ay<="2002" and ("715"/$.ccls. "345"/$.ccls.)	US-PGPUB; USPAT; FPRS; EPO; DERWENT	OR	ON	2013/12/01 22:48
S311	236	(strip) with (drag slide glide swipe touch gesture) and @ay<="2002" and ("715"/$.ccls. "345"/$.ccls.)	US-PGPUB; USPAT; FPRS; EPO; DERWENT	OR	ON	2013/12/01 22:49
S312	1274	(strip edge) with (drag slide glide swipe touch gesture) and @ay<="2002" and ("715"/$.ccls. "345"/$.ccls.)	US-PGPUB; USPAT; FPRS; EPO; DERWENT	OR	ON	2013/12/01 22:49
S313	251	(strip edge) with (drag slide glide swipe touch gesture) with display and @ay<="2002" and ("715"/$.ccls. "345"/$.ccls.)	US-PGPUB; USPAT; FPRS; EPO; DERWENT	OR	ON	2013/12/01 22:50
S314	5	(strip zone region area) near edge with (drag slide glide swipe touch gesture) with display and @ay<="2002" and ("715"/$.ccls. "345"/$.ccls.)	US-PGPUB; USPAT; FPRS; EPO; DERWENT	OR	ON	2013/12/01 22:57
S315	8	(strip zone region area) near edge	US-PGPUB;	OR	ON	2013/12/01

		same touch with display and @ay<="2002" and ("715"/$.ccls. "345"/$.ccls.)	USPAT; FPRS; EPO; DERWENT			23:01
S316	129	(strip zone region area) near3 edge same touch and @ay<="2002" and ("715"/$.ccls. "345"/$.ccls.)	US-PGPUB; USPAT; FPRS; EPO; DERWENT	OR	ON	2013/12/01 23:03
S317	2	"5821930".pn.	US-PGPUB; USPAT; FPRS; EPO; DERWENT	OR	ON	2013/12/01 23:09
S318	2	"5406307".pn.	US-PGPUB; USPAT; FPRS; EPO; DERWENT	OR	ON	2013/12/01 23:11

EAST Search History (Interference)

Ref #	Hits	Search Query	DBs	Default Operator	Plurals	Time Stamp
L12	101	(strip zone region area) near3 edge same (slide glide swipe drag) with (out away).clm.	US-PGPUB; USPAT; UPAD	OR	ON	2014/05/28 14:12
L13	89	(strip zone region area) near3 edge with (slide glide swipe drag) with (out away).clm.	US-PGPUB; USPAT; UPAD	OR	ON	2014/05/28 14:12
L14	0	tap near (present active) with (strip zone region area) near3 edge with (slide glide swipe drag) with (out away).clm.	US-PGPUB; USPAT; UPAD	OR	ON	2014/05/28 14:13
L15	0	tap near (present active absent) with (strip zone region area) near3 edge with (slide glide swipe drag) with (out away).clm.	US-PGPUB; USPAT; UPAD	OR	ON	2014/05/28 14:13
L16	5	lock with (strip zone region area) near3 edge with (slide glide swipe drag) with (out away).clm.	US-PGPUB; USPAT; UPAD	OR	ON	2014/05/28 14:13

5/28/2014 2:13:52 PM
C:\Users\rpitaro\Documents\EAST\Workspaces\13310755.wsp

Issue Classification	Application/Control No.	Applicant(s)/Patent Under Reexamination
	13310755	GOERTZ, MAGNUS
	Examiner	**Art Unit**
	RYAN PITARO	2171

CPC						
Symbol					**Type**	**Version**
G06F		3	/	0481	I	2013-01-01
G06F		3	/	0488	F	2013-01-01
			/			
			/			
			/			
			/			
			/			
			/			
			/			
			/			
			/			
			/			
			/			
			/			

CPC Combination Sets							
Symbol					**Type**	**Set**	**Ranking**	**Version**
			/					
			/					

NONE (Assistant Examiner)	(Date)	**Total Claims Allowed:** 8	
/RYAN PITARO/ Primary Examiner.Art Unit 2171 (Primary Examiner)	05/28/2014 (Date)	O.G. Print Claim(s) 21	O.G. Print Figure 3

U.S. Patent and Trademark Office — Part of Paper No. 20140528

Issue Classification	Application/Control No.	Applicant(s)/Patent Under Reexamination
	13310755	GOERTZ, MAGNUS
	Examiner	Art Unit
	RYAN PITARO	2171

US ORIGINAL CLASSIFICATION		INTERNATIONAL CLASSIFICATION	
CLASS	SUBCLASS	CLAIMED	NON-CLAIMED
715	863	G 0 6 F 3 / 00 (2006.01.01)	

CROSS REFERENCE(S)					
CLASS	SUBCLASS (ONE SUBCLASS PER BLOCK)				
715	764	864			

NONE	Total Claims Allowed:	
(Assistant Examiner) (Date)	8	
/RYAN PITARO/ Primary Examiner.Art Unit 2171 05/28/2014	O.G. Print Claim(s)	O.G. Print Figure
(Primary Examiner) (Date)	21	3

Issue Classification	Application/Control No.	Applicant(s)/Patent Under Reexamination
	13310755	GOERTZ, MAGNUS
	Examiner	Art Unit
	RYAN PITARO	2171

☒ Claims renumbered in the same order as presented by applicant ☐ CPA ☐ T.D. ☐ R.1.47

Final	Original	Final	Original	Final	Original	Final	Original	Final	Original	Final	Original	Final	Original	Final	Original

NONE (Assistant Examiner)	(Date)	Total Claims Allowed: 8	
/RYAN PITARO/ Primary Examiner.Art Unit 2171 (Primary Examiner)	05/28/2014 (Date)	O.G. Print Claim(s) 21	O.G. Print Figure 3

U.S. Patent and Trademark Office Part of Paper No. 20140528

PTO/SB/08a (01-10)
Approved for use through 07/31/2012. OMB 0651-0031
U.S. Patent and Trademark Office; U.S. DEPARTMENT OF COMMERCE

Under the Paperwork Reduction Act of 1995, no persons are required to respond to a collection of information unless it contains a valid OMB control number.

INFORMATION DISCLOSURE STATEMENT BY APPLICANT
(Not for submission under 37 CFR 1.99)

Application Number	13310755
Filing Date	2011-12-04
First Named Inventor	Magnus Goertz
Art Unit	2171
Examiner Name	Ryan F. Pitaro
Attorney Docket Number	NEONODE.P039

U.S.PATENTS Remove

Examiner Initial*	Cite No	Patent Number	Kind Code[1]	Issue Date	Name of Patentee or Applicant of cited Document	Pages,Columns,Lines where Relevant Passages or Relevant Figures Appear
/R.P./	1	4847606	A	1989-07-11	Beiswenger	
/R.P./	2	6664983	B2	2003-12-16	Ludoplh	
/R.P./	3	6765559	B2	2004-07-20	Hayakawa	

If you wish to add additional U.S. Patent citation information please click the Add button. Add

U.S.PATENT APPLICATION PUBLICATIONS Remove

Examiner Initial*	Cite No	Publication Number	Kind Code[1]	Publication Date	Name of Patentee or Applicant of cited Document	Pages,Columns,Lines where Relevant Passages or Relevant Figures Appear
	1					

If you wish to add additional U.S. Published Application citation information please click the Add button. Add

FOREIGN PATENT DOCUMENTS Remove

Examiner Initial*	Cite No	Foreign Document Number[3]	Country Code[2] i	Kind Code[4]	Publication Date	Name of Patentee or Applicant of cited Document	Pages,Columns,Lines where Relevant Passages or Relevant Figures Appear	T[5]
	1							☐

INFORMATION DISCLOSURE STATEMENT BY APPLICANT (**Not for submission under 37 CFR 1.99)**		
	Application Number	13310755
	Filing Date	2011-12-04
	First Named Inventor	Magnus Goertz
	Art Unit	2171
	Examiner Name	Ryan F. Pitaro
	Attorney Docket Number	NEONODE.P039

If you wish to add additional Foreign Patent Document citation information please click the Add button **Add**

NON-PATENT LITERATURE DOCUMENTS **Remove**

Examiner Initials*	Cite No	Include name of the author (in CAPITAL LETTERS), title of the article (when appropriate), title of the item (book, magazine, journal, serial, symposium, catalog, etc), date, pages(s), volume-issue number(s), publisher, city and/or country where published.	T[5]
/R.P./	1	Launch 'em, Synergy Solutions Inc., October 8, 2001	☐

If you wish to add additional non-patent literature document citation information please click the Add button **Add**

EXAMINER SIGNATURE

Examiner Signature	/Ryan Pitaro/	Date Considered	05/28/2014

*EXAMINER: Initial if reference considered, whether or not citation is in conformance with MPEP 609. Draw line through a citation if not in conformance and not considered. Include copy of this form with next communication to applicant.

[1] See Kind Codes of USPTO Patent Documents at www.USPTO.GOV or MPEP 901.04. [2] Enter office that issued the document, by the two-letter code (WIPO Standard ST.3). [3] For Japanese patent documents, the indication of the year of the reign of the Emperor must precede the serial number of the patent document. [4] Kind of document by the appropriate symbols as indicated on the document under WIPO Standard ST.16 if possible. [5] Applicant is to place a check mark here if English language translation is attached.

INFORMATION DISCLOSURE STATEMENT BY APPLICANT (**Not for submission under 37 CFR 1.99)**		
	Application Number	13310755
	Filing Date	2011-12-04
	First Named Inventor	Magnus Goertz
	Art Unit	2171
	Examiner Name	Ryan F. Pitaro
	Attorney Docket Number	NEONODE.P039

CERTIFICATION STATEMENT

Please see 37 CFR 1.97 and 1.98 to make the appropriate selection(s):

☐ That each item of information contained in the information disclosure statement was first cited in any communication from a foreign patent office in a counterpart foreign application not more than three months prior to the filing of the information disclosure statement. See 37 CFR 1.97(e)(1).

OR

☐ That no item of information contained in the information disclosure statement was cited in a communication from a foreign patent office in a counterpart foreign application, and, to the knowledge of the person signing the certification after making reasonable inquiry, no item of information contained in the information disclosure statement was known to any individual designated in 37 CFR 1.56(c) more than three months prior to the filing of the information disclosure statement. See 37 CFR 1.97(e)(2).

☐ See attached certification statement.

☒ The fee set forth in 37 CFR 1.17 (p) has been submitted herewith.

☒ A certification statement is not submitted herewith.

SIGNATURE

A signature of the applicant or representative is required in accordance with CFR 1.33, 10.18. Please see CFR 1.4(d) for the form of the signature.

Signature	/Marc A. Berger/	Date (YYYY-MM-DD)	2014-05-20
Name/Print	Marc A. Berger	Registration Number	44029

This collection of information is required by 37 CFR 1.97 and 1.98. The information is required to obtain or retain a benefit by the public which is to file (and by the USPTO to process) an application. Confidentiality is governed by 35 U.S.C. 122 and 37 CFR 1.14. This collection is estimated to take 1 hour to complete, including gathering, preparing and submitting the completed application form to the USPTO. Time will vary depending upon the individual case. Any comments on the amount of time you require to complete this form and/or suggestions for reducing this burden, should be sent to the Chief Information Officer, U.S. Patent and Trademark Office, U.S. Department of Commerce, P.O. Box 1450, Alexandria, VA 22313-1450. DO NOT SEND FEES OR COMPLETED FORMS TO THIS ADDRESS. **SEND TO: Commissioner for Patents, P.O. Box 1450, Alexandria, VA 22313-1450.**

Privacy Act Statement

The Privacy Act of 1974 (P.L. 93-579) requires that you be given certain information in connection with your submission of the attached form related to a patent application or patent. Accordingly, pursuant to the requirements of the Act, please be advised that: (1) the general authority for the collection of this information is 35 U.S.C. 2(b)(2); (2) furnishing of the information solicited is voluntary; and (3) the principal purpose for which the information is used by the U.S. Patent and Trademark Office is to process and/or examine your submission related to a patent application or patent. If you do not furnish the requested information, the U.S. Patent and Trademark Office may not be able to process and/or examine your submission, which may result in termination of proceedings or abandonment of the application or expiration of the patent.

The information provided by you in this form will be subject to the following routine uses:

1. The information on this form will be treated confidentially to the extent allowed under the Freedom of Information Act (5 U.S.C. 552) and the Privacy Act (5 U.S.C. 552a). Records from this system of records may be disclosed to the Department of Justice to determine whether the Freedom of Information Act requires disclosure of these record s.

2. A record from this system of records may be disclosed, as a routine use, in the course of presenting evidence to a court, magistrate, or administrative tribunal, including disclosures to opposing counsel in the course of settlement negotiations.

3. A record in this system of records may be disclosed, as a routine use, to a Member of Congress submitting a request involving an individual, to whom the record pertains, when the individual has requested assistance from the Member with respect to the subject matter of the record.

4. A record in this system of records may be disclosed, as a routine use, to a contractor of the Agency having need for the information in order to perform a contract. Recipients of information shall be required to comply with the requirements of the Privacy Act of 1974, as amended, pursuant to 5 U.S.C. 552a(m).

5. A record related to an International Application filed under the Patent Cooperation Treaty in this system of records may be disclosed, as a routine use, to the International Bureau of the World Intellectual Property Organization, pursuant to the Patent Cooperation Treaty.

6. A record in this system of records may be disclosed, as a routine use, to another federal agency for purposes of National Security review (35 U.S.C. 181) and for review pursuant to the Atomic Energy Act (42 U.S.C. 218(c)).

7. A record from this system of records may be disclosed, as a routine use, to the Administrator, General Services, or his/her designee, during an inspection of records conducted by GSA as part of that agency's responsibility to recommend improvements in records management practices and programs, under authority of 44 U.S.C. 2904 and 2906. Such disclosure shall be made in accordance with the GSA regulations governing inspection of records for this purpose, and any other relevant (i.e., GSA or Commerce) directive. Such disclosure shall not be used to make determinations about individuals.

8. A record from this system of records may be disclosed, as a routine use, to the public after either publication of the application pursuant to 35 U.S.C. 122(b) or issuance of a patent pursuant to 35 U.S.C. 151. Further, a record may be disclosed, subject to the limitations of 37 CFR 1.14, as a routine use, to the public if the record was filed in an application which became abandoned or in which the proceedings were terminated and which application is referenced by either a published application, an application open to public inspections or an issued patent.

9. A record from this system of records may be disclosed, as a routine use, to a Federal, State, or local law enforcement agency, if the USPTO becomes aware of a violation or potential violation of law or regulation.

Search Notes	Application/Control No.	Applicant(s)/Patent Under Reexamination
	13310755	GOERTZ, MAGNUS
	Examiner	Art Unit
	RYAN PITARO	2171

CPC- SEARCHED		
Symbol	Date	Examiner

CPC COMBINATION SETS - SEARCHED		
Symbol	Date	Examiner

US CLASSIFICATION SEARCHED			
Class	Subclass	Date	Examiner
715	863	5/28/2014	RFP
715	864	5/28/2014	RFP
715	764	5/28/2014	RFP

SEARCH NOTES		
Search Notes	Date	Examiner
EAST	5/3/2012	RFP
Internet	5/3/2012	RFP
Inventor Name	5/3/2012	RFP
IEEE	5/3/2012	RFP
Update Search	9/17/2012	RFP
Update Search	2/22/2013	RFP
Update Search	7/23/2013	RFP
Update Search	12/1/2013	RFP
Update Search	5/28/2014	RFP

INTERFERENCE SEARCH			
US Class/ CPC Symbol	US Subclass / CPC Group	Date	Examiner
PG	PUB	5/28/2014	RFP

PTO/SB/08a (01-10)
Approved for use through 07/31/2012. OMB 0651-0031
U.S. Patent and Trademark Office; U.S. DEPARTMENT OF COMMERCE

Under the Paperwork Reduction Act of 1995, no persons are required to respond to a collection of information unless it contains a valid OMB control number.

INFORMATION DISCLOSURE STATEMENT BY APPLICANT
(Not for submission under 37 CFR 1.99)

Application Number	13310755
Filing Date	2011-12-04
First Named Inventor	Magnus Goertz
Art Unit	2171
Examiner Name	Ryan F. Pitaro
Attorney Docket Number	NEONODE.P039

U.S.PATENTS Remove

Examiner Initial*	Cite No	Patent Number	Kind Code[1]	Issue Date	Name of Patentee or Applicant of cited Document	Pages,Columns,Lines where Relevant Passages or Relevant Figures Appear
	1	4847606	A	1989-07-11	Beiswenger	
	2	6664983	B2	2003-12-16	Ludoplh	
	3	6765559	B2	2004-07-20	Hayakawa	

If you wish to add additional U.S. Patent citation information please click the Add button. Add

U.S.PATENT APPLICATION PUBLICATIONS Remove

Examiner Initial*	Cite No	Publication Number	Kind Code[1]	Publication Date	Name of Patentee or Applicant of cited Document	Pages,Columns,Lines where Relevant Passages or Relevant Figures Appear
	1					

If you wish to add additional U.S. Published Application citation information please click the Add button. Add

FOREIGN PATENT DOCUMENTS Remove

Examiner Initial*	Cite No	Foreign Document Number[3]	Country Code[2] i	Kind Code[4]	Publication Date	Name of Patentee or Applicant of cited Document	Pages,Columns,Lines where Relevant Passages or Relevant Figures Appear	T[5]
	1							☐

INFORMATION DISCLOSURE STATEMENT BY APPLICANT (**Not for submission under 37 CFR 1.99)**		
	Application Number	13310755
	Filing Date	2011-12-04
	First Named Inventor	Magnus Goertz
	Art Unit	2171
	Examiner Name	Ryan F. Pitaro
	Attorney Docket Number	NEONODE.P039

If you wish to add additional Foreign Patent Document citation information please click the Add button			Add
NON-PATENT LITERATURE DOCUMENTS			Remove
Examiner Initials*	Cite No	Include name of the author (in CAPITAL LETTERS), title of the article (when appropriate), title of the item (book, magazine, journal, serial, symposium, catalog, etc), date, pages(s), volume-issue number(s), publisher, city and/or country where published.	T[5]
	1	Launch 'em, Synergy Solutions Inc., October 8, 2001	☐
If you wish to add additional non-patent literature document citation information please click the Add button			Add

EXAMINER SIGNATURE			
Examiner Signature		Date Considered	

*EXAMINER: Initial if reference considered, whether or not citation is in conformance with MPEP 609. Draw line through a citation if not in conformance and not considered. Include copy of this form with next communication to applicant.

[1] See Kind Codes of USPTO Patent Documents at www.USPTO.GOV or MPEP 901.04. [2] Enter office that issued the document, by the two-letter code (WIPO Standard ST.3). [3] For Japanese patent documents, the indication of the year of the reign of the Emperor must precede the serial number of the patent document. [4] Kind of document by the appropriate symbols as indicated on the document under WIPO Standard ST.16 if possible. [5] Applicant is to place a check mark here if English language translation is attached.

INFORMATION DISCLOSURE STATEMENT BY APPLICANT (Not for submission under 37 CFR 1.99)		
	Application Number	13310755
	Filing Date	2011-12-04
	First Named Inventor	Magnus Goertz
	Art Unit	2171
	Examiner Name	Ryan F. Pitaro
	Attorney Docket Number	NEONODE.P039

CERTIFICATION STATEMENT

Please see 37 CFR 1.97 and 1.98 to make the appropriate selection(s):

☐ That each item of information contained in the information disclosure statement was first cited in any communication from a foreign patent office in a counterpart foreign application not more than three months prior to the filing of the information disclosure statement. See 37 CFR 1.97(e)(1).

OR

☐ That no item of information contained in the information disclosure statement was cited in a communication from a foreign patent office in a counterpart foreign application, and, to the knowledge of the person signing the certification after making reasonable inquiry, no item of information contained in the information disclosure statement was known to any individual designated in 37 CFR 1.56(c) more than three months prior to the filing of the information disclosure statement. See 37 CFR 1.97(e)(2).

☐ See attached certification statement.

☒ The fee set forth in 37 CFR 1.17 (p) has been submitted herewith.

☒ A certification statement is not submitted herewith.

SIGNATURE

A signature of the applicant or representative is required in accordance with CFR 1.33, 10.18. Please see CFR 1.4(d) for the form of the signature.

Signature	/Marc A. Berger/	Date (YYYY-MM-DD)	2014-05-20
Name/Print	Marc A. Berger	Registration Number	44029

This collection of information is required by 37 CFR 1.97 and 1.98. The information is required to obtain or retain a benefit by the public which is to file (and by the USPTO to process) an application. Confidentiality is governed by 35 U.S.C. 122 and 37 CFR 1.14. This collection is estimated to take 1 hour to complete, including gathering, preparing and submitting the completed application form to the USPTO. Time will vary depending upon the individual case. Any comments on the amount of time you require to complete this form and/or suggestions for reducing this burden, should be sent to the Chief Information Officer, U.S. Patent and Trademark Office, U.S. Department of Commerce, P.O. Box 1450, Alexandria, VA 22313-1450. DO NOT SEND FEES OR COMPLETED FORMS TO THIS ADDRESS. **SEND TO: Commissioner for Patents, P.O. Box 1450, Alexandria, VA 22313-1450.**

Privacy Act Statement

The Privacy Act of 1974 (P.L. 93-579) requires that you be given certain information in connection with your submission of the attached form related to a patent application or patent. Accordingly, pursuant to the requirements of the Act, please be advised that: (1) the general authority for the collection of this information is 35 U.S.C. 2(b)(2); (2) furnishing of the information solicited is voluntary; and (3) the principal purpose for which the information is used by the U.S. Patent and Trademark Office is to process and/or examine your submission related to a patent application or patent. If you do not furnish the requested information, the U.S. Patent and Trademark Office may not be able to process and/or examine your submission, which may result in termination of proceedings or abandonment of the application or expiration of the patent.

The information provided by you in this form will be subject to the following routine uses:

1. The information on this form will be treated confidentially to the extent allowed under the Freedom of Information Act (5 U.S.C. 552) and the Privacy Act (5 U.S.C. 552a). Records from this system of records may be disclosed to the Department of Justice to determine whether the Freedom of Information Act requires disclosure of these record s.

2. A record from this system of records may be disclosed, as a routine use, in the course of presenting evidence to a court, magistrate, or administrative tribunal, including disclosures to opposing counsel in the course of settlement negotiations.

3. A record in this system of records may be disclosed, as a routine use, to a Member of Congress submitting a request involving an individual, to whom the record pertains, when the individual has requested assistance from the Member with respect to the subject matter of the record.

4. A record in this system of records may be disclosed, as a routine use, to a contractor of the Agency having need for the information in order to perform a contract. Recipients of information shall be required to comply with the requirements of the Privacy Act of 1974, as amended, pursuant to 5 U.S.C. 552a(m).

5. A record related to an International Application filed under the Patent Cooperation Treaty in this system of records may be disclosed, as a routine use, to the International Bureau of the World Intellectual Property Organization, pursuant to the Patent Cooperation Treaty.

6. A record in this system of records may be disclosed, as a routine use, to another federal agency for purposes of National Security review (35 U.S.C. 181) and for review pursuant to the Atomic Energy Act (42 U.S.C. 218(c)).

7. A record from this system of records may be disclosed, as a routine use, to the Administrator, General Services, or his/her designee, during an inspection of records conducted by GSA as part of that agency's responsibility to recommend improvements in records management practices and programs, under authority of 44 U.S.C. 2904 and 2906. Such disclosure shall be made in accordance with the GSA regulations governing inspection of records for this purpose, and any other relevant (i.e., GSA or Commerce) directive. Such disclosure shall not be used to make determinations about individuals.

8. A record from this system of records may be disclosed, as a routine use, to the public after either publication of the application pursuant to 35 U.S.C. 122(b) or issuance of a patent pursuant to 35 U.S.C. 151. Further, a record may be disclosed, subject to the limitations of 37 CFR 1.14, as a routine use, to the public if the record was filed in an application which became abandoned or in which the proceedings were terminated and which application is referenced by either a published application, an application open to public inspections or an issued patent.

9. A record from this system of records may be disclosed, as a routine use, to a Federal, State, or local law enforcement agency, if the USPTO becomes aware of a violation or potential violation of law or regulation.

Electronic Patent Application Fee Transmittal	
Application Number:	13310755
Filing Date:	04-Dec-2011
Title of Invention:	USER INTERFACE
First Named Inventor/Applicant Name:	Magnus Goertz
Filer:	Marc Aron Berger
Attorney Docket Number:	NEONODE.P039
Filed as Large Entity	

Utility under 35 USC 111(a) Filing Fees

Description	Fee Code	Quantity	Amount	Sub-Total in USD($)
Basic Filing:				
Pages:				
Claims:				
Miscellaneous-Filing:				
Petition:				
Patent-Appeals-and-Interference:				
Post-Allowance-and-Post-Issuance:				
Extension-of-Time:				

Description	Fee Code	Quantity	Amount	Sub-Total in USD($)
Miscellaneous:				
Submission- Information Disclosure Stmt	1806	1	180	180
		Total in USD ($)		**180**

Electronic Acknowledgement Receipt	
EFS ID:	19076994
Application Number:	13310755
International Application Number:	
Confirmation Number:	1066
Title of Invention:	USER INTERFACE
First Named Inventor/Applicant Name:	Magnus Goertz
Customer Number:	75660
Filer:	Marc Aron Berger
Filer Authorized By:	
Attorney Docket Number:	NEONODE.P039
Receipt Date:	20-MAY-2014
Filing Date:	04-DEC-2011
Time Stamp:	13:21:41
Application Type:	Utility under 35 USC 111(a)

Payment information:

Submitted with Payment	yes
Payment Type	Credit Card
Payment was successfully received in RAM	$180
RAM confirmation Number	10749
Deposit Account	
Authorized User	

File Listing:

Document Number	Document Description	File Name	File Size(Bytes)/ Message Digest	Multi Part /.zip	Pages (if appl.)

1	Information Disclosure Statement (IDS) Form (SB08)	NEONODE-P039_InformationDisclosureStatement_05-20-2014.pdf	612308 5eb0b1cc82a3218e13d11eba43828d8cdf688254	no	4
Warnings:					
Information:					
2	Non Patent Literature	LAUNCHEM-2.pdf	867711 5c076304b325ec169533f4b310e759829e0f3b5d	no	20
Warnings:					
Information:					
3	Fee Worksheet (SB06)	fee-info.pdf	30279 13e22673d52e93c4fa7d06fcb26aa2ce027e4402	no	2
Warnings:					
Information:					
			Total Files Size (in bytes):	1510298	

This Acknowledgement Receipt evidences receipt on the noted date by the USPTO of the indicated documents, characterized by the applicant, and including page counts, where applicable. It serves as evidence of receipt similar to a Post Card, as described in MPEP 503.

New Applications Under 35 U.S.C. 111
If a new application is being filed and the application includes the necessary components for a filing date (see 37 CFR 1.53(b)-(d) and MPEP 506), a Filing Receipt (37 CFR 1.54) will be issued in due course and the date shown on this Acknowledgement Receipt will establish the filing date of the application.

National Stage of an International Application under 35 U.S.C. 371
If a timely submission to enter the national stage of an international application is compliant with the conditions of 35 U.S.C. 371 and other applicable requirements a Form PCT/DO/EO/903 indicating acceptance of the application as a national stage submission under 35 U.S.C. 371 will be issued in addition to the Filing Receipt, in due course.

New International Application Filed with the USPTO as a Receiving Office
If a new international application is being filed and the international application includes the necessary components for an international filing date (see PCT Article 11 and MPEP 1810), a Notification of the International Application Number and of the International Filing Date (Form PCT/RO/105) will be issued in due course, subject to prescriptions concerning national security, and the date shown on this Acknowledgement Receipt will establish the international filing date of the application.

Attorney's Docket No.: NEONODE.P039 *PATENT*

IN THE UNITED STATES PATENT AND TRADEMARK OFFICE

In Re Patent Application of:	)	
	)	Examiner: Ryan F. Pitaro
Magnus Goertz	)	
	)	Art Unit: 2171
Application No: 13/310,755	)	
	)	
Filed: December 4, 2011	)	
	)	
For: USER INTERFACE	)	
	)	

Mail Stop AMENDMENT
Commissioner for Patents
P. O. Box 1450
Alexandria, VA 22313-1450

AMENDMENT AND RESPONSE TO OFFICE ACTION

UNDER 37 C.F.R. §1.111

In response to the outstanding Office action dated December 4, 2013 (the "Office Action") and pursuant to 37 C.F.R. §1.111, applicant respectfully requests that the above-identified application be amended as follows. The fee for a one-month extension of time to respond is being submitted herewith.

IN THE CLAIMS:

Please substitute the following claims for the claims with the same number.

1. – **18.** (canceled)

19. (withdrawn) A non-transitory computer readable medium storing computer program code which, when executed by a mobile handheld device that has a touch sensitive display, instructs the device (i) to display a notification of an incoming phone call, and (ii) to accept the call in response to a multi-step operation comprising an object touching the touch sensitive display, and the object gliding along the touch sensitive display in a specific direction.

20. (withdrawn) The computer readable medium of claim **19**, wherein the program code instructs the device (iii) to disconnect the call in response to a multi-step operation comprising an object touching the touch sensitive area, and the object gliding the object along the touch sensitive display in a direction opposite to the specific direction.

21. (currently amended) A non-transitory computer readable medium storing instructions, which, when executed by a processor of an electronic device having a touch-sensitive display screen, cause the processor to enable a user interface of the device, the user interface comprising at least two states, namely, (a) a tap-present state, wherein a plurality of tap-activatable icons for a respective plurality of pre-designated system functions are present, each system function being activated in response to a tap on its respective icon, and (b) a tap-absent state, wherein tap-activatable icons are absent but an otherwise-

activatable graphic is present in a strip along at least one edge of the display screen for transitioning the user interface from the tap-absent state to the tap-present state in response to a multi-step user gesture comprising (i) an object touching the display screen within the strip, and (ii) the object gliding ~~along~~ on the display screen away from ~~the touched location~~ and out of the strip.

22. – **27.** (canceled)

28. (withdrawn) A computer readable medium storing computer program code, which, when executed by a mobile handheld device having a touch sensitive display, instructs the device (i) to display a list of files of a first type, and (ii) to change the list to display files of a second type in response to a tap on the display.

29. (withdrawn) The computer readable medium of claim **28**, wherein the computer program code instructs the device to (iii) display a representation of a file type, and wherein the device changes the list in response to a tap on the representation of the file type.

30. (withdrawn) The computer readable medium of claim **28**, wherein the files of the first type are data files, and the files of the second type are application files.

31. (withdrawn) A computer readable medium storing computer program code, which, when executed by a mobile handheld device that has a touch sensitive display, instructs the device to (i) to display a data input keypad for a user to enter data, and to display a text field for entered data, (ii) to display representations of a plurality of applications, and (iii) to activate

one of the applications and to have the application use the entered data, in response to a tap on its representation.

32. (withdrawn) The computer readable medium of claim **31**, wherein the plurality of applications includes a telephone application that uses the entered data as a telephone number.

33. (withdrawn) The computer readable medium of claim **31**, wherein the plurality of applications includes a text messaging application that uses the entered data as a text message.

34. (withdrawn) The computer readable medium of claim **33**, wherein the text messaging application is a short messaging service (SMS) application.

35. (withdrawn) The computer readable medium of claim **33**, wherein the text messaging application is an e-mail application.

36. (withdrawn) The computer readable medium of claim **31**, wherein the plurality of applications includes a contact list application that stores the entered data as retrievable contact information.

37. (previously presented) The computer readable medium of claim **21**, wherein any state transition elicited by a user gesture that begins at a location at which the otherwise-activatable graphic is provided, transitions to the tap-present state.

38. (canceled)

39. (previously presented) The computer readable medium of claim **21**, wherein the tap-present state does not display the tap-activatable icons within a window frame.

40. (previously presented) The computer readable medium of claim **21**, wherein the plurality of pre-designated system functions comprises a help function.

41. (previously presented) The computer readable medium of claim **21**, wherein the plurality of pre-designated system functions comprises a clock function.

42. (previously presented) The computer readable medium of claim **21**, wherein the plurality of pre-designated system functions comprises an alarm function.

43 - **45.** (canceled)

46. (previously presented) The computer readable medium of claim **21**, wherein the strip is less than a thumb's width wide within the display screen.

47. (currently amended) The computer readable medium of claim **21**, wherein the multi-step user gesture comprises (i) the object touching the otherwise-activatable graphic, and (ii) the object gliding ~~along~~ on the display screen away from ~~the touched location~~ and out of the strip.

REMARKS

Applicant expresses appreciation to the Examiner for the courtesy of an interview granted to applicant's representatives Marc A. Berger (Reg. No. 44,029) and Joseph Shain. The interview was held by telephone on March 19, 2014. The substance of the interview focused on proposed amendments to claim **21** vis-à-vis the reference of Brisebois et al., US Publication No. 2001/0043189 A1 ("Brisebois").

Applicant's representative has carefully studied the outstanding Office Action. The present amendment is intended to place the application in condition for allowance and is believed to overcome all of the rejections made by the Office Action. Favorable reconsideration and allowance of the application are respectfully requested.

Applicant has canceled claims **43** - **45** without disclaimer of the ability to pursue the subject matter of these claims in a continuation, divisional or other application. Applicant has amended claims **21** and **47** without disclaiming the right to pursue the subject matter of these claims prior to amendment. No new matter has been introduced, and support for the claim amendments is provided below. Claims **21**, **37**, **39** – **42**, **46** and **47** are presented for examination.

Claim Rejections – 35 U.S.C. §112

On pages 2 and 3, the Office Action has rejected claims **43** – **45** under 35 U.S.C. §112(a) as failing to comply with the written description requirement. Applicant has canceled claims **43** – **45** without acquiescence to the Office Action's reasons for rejection, and respectfully submits that rejection of these claims is thus rendered moot.

Claim Rejections – 35 U.S.C. §103

On pages 3 - 7, the Office Action has rejected claims **21**, **37**, **39** and **43** – **47** under 35 U.S.C. §103(a) as being unpatentable over Hansen, US Patent No. 5,821,930 ("Hansen") in view of Hirayama et al., US Patent No. 5,406,307 ("Hirayama"), and in view of Brisebois. Applicant has canceled claims **43** – **45** without acquiescence to the Office Action's reasons for rejection, and respectfully submits that rejection of these claims is thus rendered moot.

On pages 7 and 8, the Office Action has rejected claims **40** and **41** under 35 U.S.C. §103(a) as being unpatentable over Hansen in view of Hirayama and Brisebois, and in view of Pogue, Palm Pilot: The Ultimate Guide, 2nd Edition ("Pogue").

On pages 8 and 9, the Office Action has rejected claim **42** under 35 U.S.C. §103(a) as being unpatentable over Hansen in view of Hirayama and Brisebois, and in view of Carlson, Visual Quickstart Guide: Palm Organizers ("Carlson").

Brief Discussion of Applied References

The reference of Hirayama was discussed in applicant's response filed on May 3, 2013. The reference of Carlson was discussed in applicant's response filed on July 3, 2012. The reference of Pogue was discussed in applicant's response filed on December 20, 2012. The reference of Hansen was discussed in applicant's response filed on October 25, 2013.

Brisebois describes an input device in the form of a flexible active edge around the perimeter of a display, which responds to touch and pressure (Brisebois/ paragraphs [0027], [0030] and [0031]; element 120 of FIG. 1; FIGS. 2a and 3a; elements 420 and 430 of FIGS. 4a and 4b; element 520 of FIG. 5a). The active edge provides two-step

user interface functionality, whereby a first function is implemented when a pressure or touch is applied to an area of the active edge, and a second function is implemented when additional pressure is applied to the same area (Brisebois/ paragraphs [0036], [0043], [0044], [0053], [0054], [0058], [0059], [0063] and [0066]; FIGS. 2b, 2c; 3b, 3c and 6).

Response to Claim Rejections – 35 U.S.C. §103

In rejecting claim **21**, the Office Action asserts that the combination of Brisebois with Hansen and Hirayama teaches the claimed feature of "*a multi-step user gesture comprising (i) an object touching the display screen within the strip, and (ii) the object gliding along the display screen away from the touched location*". In fact, Brisebois makes it clear that any sweeping gesture must be performed along the active edge in order to be processed. Inter alia, Brisebois states that

- "*The smoothness of upper surface 205 allows a user to drag their finger or other instrument along flexible strip 200 in a sweeping motion*" (paragraph [0039], emphasis added);
- "*The smoothness of upper surface 305 allows users to drag their finger or other instrument along flexible strip 300 in a sweeping motion*" (paragraph [0048], emphasis added);
- "*… users can drag their finger down or up active edge user input device 420 to scroll through the sub-categories*" (paragraph [0057], emphasis added); and
- "*… the user can scroll through the list by dragging (e.g., touching or slightly pressing) a finger or other instrument in an upward or downward motion across the surface of active edge input device 520*" (paragraph [0064], emphasis added).

In order to further clarify the distinction of the claimed subject matter over the applied references, applicant has amended claim **21** to recite that the object glides away from and out of the strip.

Applicant respectfully submits that the combination of Brisebois with Hansen and Hirayama fails to show or suggest this feature, since application of Brisebois requires use of the flexible strip 200 or 300 shown in FIG. 2a or FIG. 3a of Brisebois, which would fail to process an object touching the display screen within the strip, and gliding on the display screen away from and out of the strip.

The rejections of the claims under 35 U.S.C. §103 will now be addressed specifically.

Claims 21, 37, 39 – 42, 46 and 47

Independent claim **21** for a computer readable storage medium, as amended, recites the feature of

"*a tap-absent state, wherein tap-activatable icons are absent but an otherwise-activatable graphic is present in a strip along at least one edge of the display screen for transitioning the user interface from the tap-absent state to the tap-present state in response to a multi-step user gesture comprising (i) an object touching the display screen within the strip, and (ii) the object gliding on the display screen away from and out of the strip*".

As explained above, this feature is neither shown nor suggested in Hansen, Hirayama, Brisebois, Pogue or Carlson.

Because claims **37**, **39** – **42**, **46** and **47** depend from claim **21** and include additional features, applicant respectfully submits that claims **37**, **39** – **42**, **46** and **47** are not anticipated or rendered

obvious by Hansen, Hirayama, Brisebois, Pogue or Carlson, taken alone or in combination.

Accordingly claims **21**, **37**, **39** – **42**, **46** and **47** are deemed to be allowable.

Support for New and Amended Claims in Original Specification

Independent claim **21** for a computer readable storage medium has been amended to include the feature that the object glides on the display screen away from and out of the strip. This feature is supported in the original specification at least by page 5, lines 24 - 27, and by FIGS. 1 and 2, which show finger 4 gliding away from and out of menu area 2.

Dependent claim **47** has been amended to include the feature that the object glides on the display screen away from and out of the strip. This feature is supported in the original specification at least by page 5, lines 24 - 27, and by FIGS. 1 and 2, which show finger 4 gliding away from and out of menu area 2.

For the foregoing reasons, applicant respectfully submits that the applicable rejections have been overcome and that the claims are in condition for allowance.

If any matters can be resolved by telephone, applicant requests that the Patent and Trademark Office please contact applicant's representative at the telephone number listed below.

Respectfully submitted,

SOQUEL GROUP LLC

Dated: March 19, 2014

/Marc A. Berger/
Marc A. Berger
Reg. No. 44,029

P.O. Box 691
Soquel, CA 95073
(831) 426-8200
Customer No. 75660

Electronic Patent Application Fee Transmittal	
Application Number:	13310755
Filing Date:	04-Dec-2011
Title of Invention:	USER INTERFACE
First Named Inventor/Applicant Name:	Magnus Goertz
Filer:	Marc Aron Berger
Attorney Docket Number:	NEONODE.P039
Filed as Large Entity	

Utility under 35 USC 111(a) Filing Fees

Description	Fee Code	Quantity	Amount	Sub-Total in USD($)
Basic Filing:				
Pages:				
Claims:				
Miscellaneous-Filing:				
Petition:				
Patent-Appeals-and-Interference:				
Post-Allowance-and-Post-Issuance:				
Extension-of-Time:				
Extension - 1 month with $0 paid	1251	1	200	200

Description	Fee Code	Quantity	Amount	Sub-Total in USD($)
Miscellaneous:				
			Total in USD ($)	**200**

Electronic Acknowledgement Receipt	
EFS ID:	18522684
Application Number:	13310755
International Application Number:	
Confirmation Number:	1066
Title of Invention:	USER INTERFACE
First Named Inventor/Applicant Name:	Magnus Goertz
Customer Number:	75660
Filer:	Marc Aron Berger
Filer Authorized By:	
Attorney Docket Number:	NEONODE.P039
Receipt Date:	19-MAR-2014
Filing Date:	04-DEC-2011
Time Stamp:	14:25:10
Application Type:	Utility under 35 USC 111(a)

Payment information:

Submitted with Payment	yes
Payment Type	Credit Card
Payment was successfully received in RAM	$200
RAM confirmation Number	693
Deposit Account	
Authorized User	

File Listing:

Document Number	Document Description	File Name	File Size(Bytes)/ Message Digest	Multi Part /.zip	Pages (if appl.)

1		NEONODE-P039_Amendment_03-19-2014.pdf	114693 94604b648d0d796a62ecfc676e4c0581f6df28d0	yes	11

	Multipart Description/PDF files in .zip description		
	Document Description	**Start**	**End**
	Amendment/Req. Reconsideration-After Non-Final Reject	1	1
	Claims	2	5
	Applicant Arguments/Remarks Made in an Amendment	6	11

Warnings:

Information:

2	Fee Worksheet (SB06)	fee-info.pdf	30259 5687ba05a51e00994ecd233501eabdc5a7224def	no	2

Warnings:

Information:

Total Files Size (in bytes):	144952

This Acknowledgement Receipt evidences receipt on the noted date by the USPTO of the indicated documents, characterized by the applicant, and including page counts, where applicable. It serves as evidence of receipt similar to a Post Card, as described in MPEP 503.

New Applications Under 35 U.S.C. 111
If a new application is being filed and the application includes the necessary components for a filing date (see 37 CFR 1.53(b)-(d) and MPEP 506), a Filing Receipt (37 CFR 1.54) will be issued in due course and the date shown on this Acknowledgement Receipt will establish the filing date of the application.

National Stage of an International Application under 35 U.S.C. 371
If a timely submission to enter the national stage of an international application is compliant with the conditions of 35 U.S.C. 371 and other applicable requirements a Form PCT/DO/EO/903 indicating acceptance of the application as a national stage submission under 35 U.S.C. 371 will be issued in addition to the Filing Receipt, in due course.

New International Application Filed with the USPTO as a Receiving Office
If a new international application is being filed and the international application includes the necessary components for an international filing date (see PCT Article 11 and MPEP 1810), a Notification of the International Application Number and of the International Filing Date (Form PCT/RO/105) will be issued in due course, subject to prescriptions concerning national security, and the date shown on this Acknowledgement Receipt will establish the international filing date of the application.

PTO/SB/06 (09-11)
Approved for use through 1/31/2014. OMB 0651-0032
U.S. Patent and Trademark Office; U.S. DEPARTMENT OF COMMERCE
Under the Paperwork Reduction Act of 1995, no persons are required to respond to a collection of information unless it displays a valid OMB control number.

PATENT APPLICATION FEE DETERMINATION RECORD Substitute for Form PTO-875	Application or Docket Number 13/310,755	Filing Date 12/04/2011	☐ To be Mailed

ENTITY: ☒ LARGE ☐ SMALL ☐ MICRO

APPLICATION AS FILED – PART I

FOR	(Column 1) NUMBER FILED	(Column 2) NUMBER EXTRA	RATE ($)	FEE ($)
☐ BASIC FEE (37 CFR 1.16(a), (b), or (c))	N/A	N/A	N/A	
☐ SEARCH FEE (37 CFR 1.16(k), (i), or (m))	N/A	N/A	N/A	
☐ EXAMINATION FEE (37 CFR 1.16(o), (p), or (q))	N/A	N/A	N/A	
TOTAL CLAIMS (37 CFR 1.16(i))	minus 20 =	*	X $ =	
INDEPENDENT CLAIMS (37 CFR 1.16(h))	minus 3 =	*	X $ =	
☐ APPLICATION SIZE FEE (37 CFR 1.16(s))	If the specification and drawings exceed 100 sheets of paper, the application size fee due is $310 ($155 for small entity) for each additional 50 sheets or fraction thereof. See 35 U.S.C. 41(a)(1)(G) and 37 CFR 1.16(s).			
☐ MULTIPLE DEPENDENT CLAIM PRESENT (37 CFR 1.16(j))				
* If the difference in column 1 is less than zero, enter "0" in column 2.			TOTAL	

APPLICATION AS AMENDED – PART II

AMENDMENT		(Column 1) CLAIMS REMAINING AFTER AMENDMENT		(Column 2) HIGHEST NUMBER PREVIOUSLY PAID FOR	(Column 3) PRESENT EXTRA	RATE ($)	ADDITIONAL FEE ($)
	Total (37 CFR 1.16(i))	*	Minus	**	=	X $ =	
	Independent (37 CFR 1.16(h))	*	Minus	***	=	X $ =	
	☐ Application Size Fee (37 CFR 1.16(s))						
	☐ FIRST PRESENTATION OF MULTIPLE DEPENDENT CLAIM (37 CFR 1.16(j))						
						TOTAL ADD'L FEE	

AMENDMENT	03/19/2014	(Column 1) CLAIMS REMAINING AFTER AMENDMENT		(Column 2) HIGHEST NUMBER PREVIOUSLY PAID FOR	(Column 3) PRESENT EXTRA	RATE ($)	ADDITIONAL FEE ($)
	Total (37 CFR 1.16(i))	* 19	Minus	** 20	= 0	X $80 =	0
	Independent (37 CFR 1.16(h))	* 4	Minus	*** 4	= 0	X $420 =	0
	☐ Application Size Fee (37 CFR 1.16(s))						
	☐ FIRST PRESENTATION OF MULTIPLE DEPENDENT CLAIM (37 CFR 1.16(j))						
						TOTAL ADD'L FEE	**0**

* If the entry in column 1 is less than the entry in column 2, write "0" in column 3.
** If the "Highest Number Previously Paid For" IN THIS SPACE is less than 20, enter "20".
*** If the "Highest Number Previously Paid For" IN THIS SPACE is less than 3, enter "3".
The "Highest Number Previously Paid For" (Total or Independent) is the highest number found in the appropriate box in column 1.

LIE
/Chantae Dessau/

This collection of information is required by 37 CFR 1.16. The information is required to obtain or retain a benefit by the public which is to file (and by the USPTO to process) an application. Confidentiality is governed by 35 U.S.C. 122 and 37 CFR 1.14. This collection is estimated to take 12 minutes to complete, including gathering, preparing, and submitting the completed application form to the USPTO. Time will vary depending upon the individual case. Any comments on the amount of time you require to complete this form and/or suggestions for reducing this burden, should be sent to the Chief Information Officer, U.S. Patent and Trademark Office, U.S. Department of Commerce, P.O. Box 1450, Alexandria, VA 22313-1450. DO NOT SEND FEES OR COMPLETED FORMS TO THIS ADDRESS. **SEND TO: Commissioner for Patents, P.O. Box 1450, Alexandria, VA 22313-1450.**
If you need assistance in completing the form, call 1-800-PTO-9199 and select option 2.

UNITED STATES PATENT AND TRADEMARK OFFICE

UNITED STATES DEPARTMENT OF COMMERCE
United States Patent and Trademark Office
Address: COMMISSIONER FOR PATENTS
P.O. Box 1450
Alexandria, Virginia 22313-1450
www.uspto.gov

APPLICATION NO.	FILING DATE	FIRST NAMED INVENTOR	ATTORNEY DOCKET NO.	CONFIRMATION NO.
13/310,755	12/04/2011	Magnus Goertz	NEONODE.P039	1066

75660 7590 12/04/2013

Soquel Group, LLC
P.O. Box 691
Soquel, CA 95073

EXAMINER	
PITARO, RYAN F	
ART UNIT	PAPER NUMBER
2171	

NOTIFICATION DATE	DELIVERY MODE
12/04/2013	ELECTRONIC

Please find below and/or attached an Office communication concerning this application or proceeding.

The time period for reply, if any, is set in the attached communication.

Notice of the Office communication was sent electronically on above-indicated "Notification Date" to the following e-mail address(es):

pto@soquelgroup.com
rblumberg@soquelgroup.com
mberger@soquelgroup.com

Office Action Summary	Application No. 13/310,755	Applicant(s) GOERTZ, MAGNUS	
	Examiner RYAN PITARO	Art Unit 2171	AIA (First Inventor to File) Status No

-- The MAILING DATE of this communication appears on the cover sheet with the correspondence address --

Period for Reply

A SHORTENED STATUTORY PERIOD FOR REPLY IS SET TO EXPIRE *3* MONTHS FROM THE MAILING DATE OF THIS COMMUNICATION.

- Extensions of time may be available under the provisions of 37 CFR 1.136(a). In no event, however, may a reply be timely filed after SIX (6) MONTHS from the mailing date of this communication.
- If NO period for reply is specified above, the maximum statutory period will apply and will expire SIX (6) MONTHS from the mailing date of this communication.
- Failure to reply within the set or extended period for reply will, by statute, cause the application to become ABANDONED (35 U.S.C. § 133). Any reply received by the Office later than three months after the mailing date of this communication, even if timely filed, may reduce any earned patent term adjustment. See 37 CFR 1.704(b).

Status

1)☒ Responsive to communication(s) filed on *10/29/2013*.

☐ A declaration(s)/affidavit(s) under **37 CFR 1.130(b)** was/were filed on _____.

2a)☐ This action is **FINAL**. 2b)☒ This action is non-final.

3)☐ An election was made by the applicant in response to a restriction requirement set forth during the interview on _____; the restriction requirement and election have been incorporated into this action.

4)☐ Since this application is in condition for allowance except for formal matters, prosecution as to the merits is closed in accordance with the practice under *Ex parte Quayle*, 1935 C.D. 11, 453 O.G. 213.

Disposition of Claims*

5)☒ Claim(s) *19-21,28-37 and 39-47* is/are pending in the application.

5a) Of the above claim(s) *19,20 and 28-36* is/are withdrawn from consideration.

6)☐ Claim(s) _____ is/are allowed.

7)☐ Claim(s) *21 and 37-47* is/are rejected.

8)☐ Claim(s) _____ is/are objected to.

9)☐ Claim(s) _____ are subject to restriction and/or election requirement.

* If any claims have been determined allowable, you may be eligible to benefit from the **Patent Prosecution Highway** program at a participating intellectual property office for the corresponding application. For more information, please see http://www.uspto.gov/patents/init_events/pph/index.jsp or send an inquiry to PPHfeedback@uspto.gov.

Application Papers

10)☐ The specification is objected to by the Examiner.

11)☐ The drawing(s) filed on _____ is/are: a)☐ accepted or b)☐ objected to by the Examiner.

Applicant may not request that any objection to the drawing(s) be held in abeyance. See 37 CFR 1.85(a).

Replacement drawing sheet(s) including the correction is required if the drawing(s) is objected to. See 37 CFR 1.121(d).

Priority under 35 U.S.C. § 119

12)☐ Acknowledgment is made of a claim for foreign priority under 35 U.S.C. § 119(a)-(d) or (f).

Certified copies:

a)☐ All b)☐ Some** c)☐ None of the:

1.☐ Certified copies of the priority documents have been received.

2.☐ Certified copies of the priority documents have been received in Application No. _____.

3.☐ Copies of the certified copies of the priority documents have been received in this National Stage application from the International Bureau (PCT Rule 17.2(a)).

** See the attached detailed Office action for a list of the certified copies not received.

Attachment(s)

1) ☒ Notice of References Cited (PTO-892)

2) ☒ Information Disclosure Statement(s) (PTO/SB/08a and/or PTO/SB/08b) Paper No(s)/Mail Date *10/25/2013*.

3) ☐ Interview Summary (PTO-413) Paper No(s)/Mail Date. _____ .

4) ☐ Other: _____.

The present application is being examined under the pre-AIA first to invent provisions.

Claim Rejections - 35 USC § 112

The following is a quotation of 35 U.S.C. 112(a):
(a) IN GENERAL.—The specification shall contain a written description of the invention, and of the manner and process of making and using it, in such full, clear, concise, and exact terms as to enable any person skilled in the art to which it pertains, or with which it is most nearly connected, to make and use the same, and shall set forth the best mode contemplated by the inventor or joint inventor of carrying out the invention.

The following is a quotation of 35 U.S.C. 112 (pre-AIA), first paragraph:
The specification shall contain a written description of the invention, and of the manner and process of making and using it, in such full, clear, concise, and exact terms as to enable any person skilled in the art to which it pertains, or with which it is most nearly connected, to make and use the same and shall set forth the best mode contemplated by the inventor of carrying out his invention.

Claims 43-45 are rejected under 35 U.S.C. 112(a) or 35 U.S.C. 112 (pre-AIA), first paragraph, as failing to comply with the written description requirement. The claim(s) contains subject matter which was not described in the specification in such a way as to reasonably convey to one skilled in the relevant art that the inventor or a joint inventor, or for pre-AIA the inventor(s), at the time the application was filed, had possession of the claimed invention.

The availability, public knowledge, or involvement of a password/passcode has not been described in such a way as to reasonably convey to one skilled in the relevant art that the inventor or a joint inventor, or for pre-AIA the inventor(s), at the time the application was filed, had possession of the claimed invention. There is no mention of the subject matter described in claims 43-45 on page 2 of the specification lines 25-28 where the applicant alleges it can be found. Figure 2 at best shows a key (216), but fails

to mention if this key represents a password/passcode/lock/unlock feature, let alone if a password is user-specific, or a gesture is publicly available etc.

Claim Rejections - 35 USC § 103

The following is a quotation of pre-AIA 35 U.S.C. 103(a) which forms the basis for all obviousness rejections set forth in this Office action:

> (a) A patent may not be obtained though the invention is not identically disclosed or described as set forth in section 102 of this title, if the differences between the subject matter sought to be patented and the prior art are such that the subject matter as a whole would have been obvious at the time the invention was made to a person having ordinary skill in the art to which said subject matter pertains. Patentability shall not be negatived by the manner in which the invention was made.

Claims 21, 37 and 39, 43-47 are rejected under pre-AIA 35 U.S.C. 103(a) as being unpatentable over Hansen (“Hansen”, US 5,821,930) in view of Hirayama et al (“Hirayama”, US 5,406,307) in view of Brisebois et al ("Brisebois", US 2001/0043189).

As per claim 21, Hansen teaches a non-transitory computer readable medium storing instructions, which when executed by a processor of an electronic device having a touch-sensitive surface, cause the processor to enable a user interface of the device, (Column 3 lines 49- Column 4 lines 4) the user interface comprising at least two states, namely (a) tap-present state, wherein a plurality of tap-activatable icons for a respective plurality of pre-designated functions are present, each system function being activated in response to a tap on its respective icon (Figure 3B, Column 5 lines 14-25), and (b) a tap absent state, wherein tap-activatable icons are absent (Figure 3A, Column 5 lines 6-13), for transitioning the user interface from the tap-absent state to the tap-present state

in response to a multi-step user gesture comprising (i) an object touching the touch sensitive surface at a location, and (ii) the object gliding along the touch sensitive surface away from the touched location (Column 4 lines 34-48, The user touches the touch sensitive screen near a predetermined area, then draw his/her finger across the touch sensitive screen. See also Column 5 lines 6-25).

Hansen fails to distinctly point out a multi-step user gesture at an otherwise-activatable graphic. However, Hirayama teaches activating utilizing a multi-step user gesture comprising an object touching the touch sensitive surface at a location where an otherwise-activatable graphic is provided, and the object gliding along the touch sensitive area away from the touched location (Figure 3A, Column 4 lines 61-Column 5 lines 13, If the user moves the point of the pen to the display without being separated therefrom after having touched the desired icon with the point of the pen and takes the point of the pen off the surface of the input tablet, an enlarged from of the processing display mode of the desired icon is automatically displayed on the display portion).

Therefore it would have been obvious to one of ordinary skill in the art at the time of the invention to combine the teaching of Hirayama with the teaching of Hansen. Motivation to do so would have been to provide way for the user to enable the preferred mode such that it is unlikely to be carried out through unintentional movement or touching. Furthermore the predetermined area of Hansen is unknown to the user since it is not displayed, by adding the graphic indicator of Hirayama the user will not have to guess the predetermined area location.

Hansen-Hirayama fails to teach a touch sensitive strip along at least one edge of the display screen. However, Brisebois teaches a strip along at least one edge of the display screen ([0039],[0057] see Figure 1 flexible strip on active edge. A user can touch or press an area of active edge input device, in addition users can drag their finger down or up. The smoothness of upper surface allows users to drag their finger or other instrument along flexible strip in a sweeping motion. See also [0058] two step functionality). Therefore it would have been obvious to one of ordinary skill in the art at the time of the invention to combine the teaching of Brisebois with the method of non-transitory medium of Hansen-Hirayama. Motivation to do so would have been to support key travel, programmability, ease of use, and adaptability to variety of applications. The active edge user interface is designed as a universal interface that can operate in any graphical user interface environment [0028]. When coupled with the interfaces of Hansen and Hirayama which include interactive elements along an edge of the interface.

As per claim 37, Hirayama teaches the computer readable medium of claim 21, wherein any state transition elicited by a user gesture that begins at a location at which the otherwise-activatable graphic is provided, transitions to the tap-present state (Figure 3A, Column 4 lines 61-Column 5 lines 13, If the user moves the point of the pen to the display without being separated therefrom after having touched the desired icon with the point of the pen and takes the point of the pen off the surface of the input tablet, an

enlarged from of the processing display mode of the desired icon is automatically displayed on the display portion).

As per claim 39, Hansen teaches the computer readable medium of claim 21, wherein the tap-present state does not display the tap-activatable icons within a window frame (Figure 3B).

As per claim 43, Hansen teaches the computer readable medium of claim 21, wherein a description of the multi-step user gesture is publicly available (Column 4 lines 34-48, The user touches the touch sensitive screen near a predetermined area, then draw his/her finger across the touch sensitive screen. See also (Column 5 lines 6-25).

As per claim 44, Hansen teaches the computer readable medium of claim 21, wherein the multi-step user gesture does not require non-public knowledge (Column 4 lines 34-48, The user touches the touch sensitive screen near a predetermined area, then draw his/her finger across the touch sensitive screen. See also (Column 5 lines 6-25).

As per claim 45, Hansen teaches the computer readable medium of claim 21, wherein the multi-step user gesture does not involve a user-specific password or passcode (Column 4 lines 34-48, The user touches the touch sensitive screen near a

predetermined area, then draw his/her finger across the touch sensitive screen. See also (Column 5 lines 6-25).

As per claim 46, Brisebois teaches the computer readable medium of claim 21, wherein the strip is less than a thumb's width wide within the display screen (Figure 1).

As per claim 47, Hirayama teaches the computer readable medium of claim 21, wherein the multi-step user gesture comprises (i) the object touching the otherwise-activatable graphic, and (ii) the object gliding along the display screen away from the touched location (Figure 3A, Column 4 lines 61-Column 5 lines 13, If the user moves the point of the pen to the display without being separated therefrom after having touched the desired icon with the point of the pen and takes the point of the pen off the surface of the input tablet, an enlarged from of the processing display mode of the desired icon is automatically displayed on the display portion).

Claims 40 and 41 are rejected pre-AIA 35 U.S.C. 103(a) as being unpatentable over Hansen (“Hansen”, US 5,821,930) in view of Hirayama et al (“Hirayama”, US 5,406,307) in view of Brisebois et al ("Brisebois", US 2001/0043189) in view of Pogue, David (“Pogue", “Palm Pilot: The Ultimate Guide, 2nd Edition).

As per claim 40, Hansen-Hirayama fails to specifically teach a help function. However, Pogue teaches the computer readable medium of claim 21, wherein the

plurality of pre-designated system functions comprises a help function (Pogue, Page 29, Graffiti Help). Therefore it would have been obvious to one of ordinary skill in the art at the time of the invention to combine the teaching of Pogue with the medium of Hansen-Hirayama. Motivation to do so would have been to provide the user with a multitude of different functions so that the capabilities of the handheld computer are vast.

As per claim 41, Pogue teaches computer readable medium of claim 21, wherein the plurality of pre-designated system functions comprises a clock function (Pogue, Page 519, Clock Hack).

Claim 42 is rejected pre-AIA 35 U.S.C. 103(a) as being unpatentable over Hansen (“Hansen”, US 5,821,930) in view of Hirayama et al (“Hirayama”, US 5,406,307) in view of Brisebois et al ("Brisebois", US 2001/0043189) in view of Carlson, Jeff (“Carlson”, Visual Quickstart Guide Palm Organizers).

As per claim 42, Hansen-Hirayama fails to specifically teach an alarm function. However, Carlson teaches the computer readable medium of claim 21, wherein the plurality of pre-designated system functions comprises an alarm function (Page 47, Figure 2.26 Alarm Hack). Therefore it would have been obvious to one of ordinary skill in the art at the time of the invention to combine the teaching of Carlson with the medium of Hansen-Hirayama. Motivation to do so would have been to provide the user

with a multitude of different functions so that the capabilities of the handheld computer are vast.

Response to Arguments

Applicant's arguments with respect to claims 21,37,39-47 have been considered but are moot because the arguments do not apply to any of the references being used in the current rejection.

Conclusion

Any inquiry concerning this communication or earlier communications from the examiner should be directed to RYAN PITARO whose telephone number is (571)272-4071. The examiner can normally be reached on 9:00am - 5:30pm Mondays through Fridays.

If attempts to reach the examiner by telephone are unsuccessful, the examiner's supervisor, Matt Kim can be reached on 571-272-4182. The fax phone number for the organization where this application or proceeding is assigned is 571-273-8300.

Information regarding the status of an application may be obtained from the Patent Application Information Retrieval (PAIR) system. Status information for published applications may be obtained from either Private PAIR or Public PAIR. Status information for unpublished applications is available through Private PAIR only. For more information about the PAIR system, see http://pair-direct.uspto.gov. Should you have questions on access to the Private PAIR system, contact the Electronic Business Center (EBC) at 866-217-9197 (toll-free). If you would like assistance from a USPTO Customer Service Representative or access to the automated information system, call 800-786-9199 (IN USA OR CANADA) or 571-272-1000.

/Ryan F Pitaro/
Primary Examiner, Art Unit 2171

Notice of References Cited	Application/Control No. 13/310,755	Applicant(s)/Patent Under Reexamination GOERTZ, MAGNUS	
	Examiner RYAN PITARO	Art Unit 2171	Page 1 of 1

U.S. PATENT DOCUMENTS

*		Document Number Country Code-Number-Kind Code	Date MM-YYYY	Name	Classification
*	A	US-5,594,471 A	01-1997	Deeran et al.	345/173
*	B	US-2001/0043189 A1	11-2001	BRISEBOIS et al.	345/156
*	C	US-2003/0206162 A1	11-2003	Roberts, Jerry B.	345/173
*	D	US-7,231,231 B2	06-2007	Kokko et al.	455/566
	E	US-			
	F	US-			
	G	US-			
	H	US-			
	I	US-			
	J	US-			
	K	US-			
	L	US-			
	M	US-			

FOREIGN PATENT DOCUMENTS

*		Document Number Country Code-Number-Kind Code	Date MM-YYYY	Country	Name	Classification
	N					
	O					
	P					
	Q					
	R					
	S					
	T					

NON-PATENT DOCUMENTS

*		Include as applicable: Author, Title Date, Publisher, Edition or Volume, Pertinent Pages)
	U	
	V	
	W	
	X	

*A copy of this reference is not being furnished with this Office action. (See MPEP § 707.05(a).)
Dates in MM-YYYY format are publication dates. Classifications may be US or foreign.

EAST Search History

EAST Search History (Prior Art)

Ref #	Hits	Search Query	DBs	Default Operator	Plurals	Time Stamp
S1	2	"20080201637"	US-PGPUB; USPAT; EPO; DERWENT; IBM_TDB	OR	ON	2012/05/02 19:01
S2	2	"8015494"	US-PGPUB; USPAT; EPO; DERWENT; IBM_TDB	OR	ON	2012/05/02 19:14
S3	7	widget with combin$7 with clock	US-PGPUB; USPAT; EPO; DERWENT; IBM_TDB	OR	ON	2012/05/02 19:19
S4	4	"2008023528"	US-PGPUB; USPAT; EPO; DERWENT; IBM_TDB	OR	ON	2012/05/02 22:10
S5	2	"20080235285"	US-PGPUB; USPAT; EPO; DERWENT; IBM_TDB	OR	ON	2012/05/02 22:11
S6	4	slide with answer with (hang disconnect)	US-PGPUB; USPAT; EPO; DERWENT; IBM_TDB	OR	ON	2012/05/03 12:30
S7	500	slide with answer	US-PGPUB; USPAT; EPO; DERWENT; IBM_TDB	OR	ON	2012/05/03 12:30
S8	54	slide with answer and "715"/$.ccls.	US-PGPUB; USPAT; EPO; DERWENT; IBM_TDB	OR	ON	2012/05/03 12:30
S9	0	swipe with answer and "715"/$.ccls.	US-PGPUB; USPAT; EPO; DERWENT; IBM_TDB	OR	ON	2012/05/03 12:33
S10	2	"20120052920"	US-PGPUB; USPAT; EPO; DERWENT; IBM_TDB	OR	ON	2012/05/03 12:35

S11	2	answer with ignore with (slide swipe glide)	US-PGPUB; USPAT; EPO; DERWENT; IBM_TDB	OR	ON	2012/05/03 12:43
S12	7555	(keypad keyboard) with (input entry) with (mobile telephone phone) and @ay<="2002"	US-PGPUB; USPAT; EPO; DERWENT; IBM_TDB	OR	ON	2012/05/03 12:53
S13	348	(keypad keyboard) with (input entry) with (mobile telephone phone) and @ay<="2002" and "715"/$.ccls.	US-PGPUB; USPAT; EPO; DERWENT; IBM_TDB	OR	ON	2012/05/03 12:53
S14	263	(keypad keyboard) with (input entry) with (mobile telephone phone) and @ay<="2001" and "715"/$.ccls.	US-PGPUB; USPAT; EPO; DERWENT; IBM_TDB	OR	ON	2012/05/03 12:53
S15	71	(keypad keyboard) with (input entry) with (mobile telephone phone) with (number sms text) and @ay<="2001" and "715"/$.ccls.	US-PGPUB; USPAT; EPO; DERWENT; IBM_TDB	OR	ON	2012/05/03 12:54
S16	3	(touch virtual) near2(keypad keyboard) with (input entry) with (mobile telephone phone) with (number sms text) and @ay<="2001" and "715"/$.ccls.	US-PGPUB; USPAT; EPO; DERWENT; IBM_TDB	OR	ON	2012/05/03 12:54
S17	10	(touch virtual) near2(keypad keyboard) with (input entry) with (mobile telephone phone) and @ay<="2001" and "715"/$.ccls.	US-PGPUB; USPAT; EPO; DERWENT; IBM_TDB	OR	ON	2012/05/03 12:55
S18	18	(touch virtual) near2(keypad keyboard) with (input entry) with (mobile telephone phone) and @ay<="2002" and "715"/$.ccls.	US-PGPUB; USPAT; EPO; DERWENT; IBM_TDB	OR	ON	2012/05/03 12:56
S19	12	("20060088216" | "4763356" | "5159664" | "5363481" | "5500923" | "5974161" | "6084598" | "6243071" | "6424357" | "6791537" | "6810272" | "6944472").PN.	US-PGPUB; USPAT; USOCR	OR	ON	2012/05/03 12:57
S20	13	("4972496" | "5157783" | "5199104" | "5237651" | "5283864" | "5341293" | "5347295" | "5367453" | "5377281" | "5390281" | "5392387" | "5398310" | "5404442").PN.	US-PGPUB; USPAT; USOCR	OR	ON	2012/05/03 12:58
S21	2038	(smartphone (smart near phone)) and @ay<="2002"	US-PGPUB; USPAT; USOCR	OR	ON	2012/05/03 12:59
S22	88	(smartphone (smart near phone)) and @ay<="2002" and (touch virtual) near (keypad keyboard)	US-PGPUB; USPAT; USOCR	OR	ON	2012/05/03 13:00
S23	12	(smartphone (smart near phone)) and @ay<="2002" and (touch	US-PGPUB; USPAT;	OR	ON	2012/05/03 13:01

		virtual) near (keypad keyboard) and sms	USOCR			
S24	183	@ay<="2002" and (touch virtual) near (keypad keyboard) and sms	US-PGPUB; USPAT; USOCR	OR	ON	2012/05/03 13:03
S25	5	@ay<="2002" and (touch virtual) near (keypad keyboard) with sms	US-PGPUB; USPAT; USOCR	OR	ON	2012/05/03 13:04
S26	48	@ay<="2002" and (touch virtual) near (keypad keyboard) and sms with phone	US-PGPUB; USPAT; USOCR	OR	ON	2012/05/03 13:04
S27	185	save near4 text with application	US-PGPUB; USPAT; USOCR	OR	ON	2012/05/03 13:11
S28	52	save near4 text with application and @ay<="2002"	US-PGPUB; USPAT; USOCR	OR	ON	2012/05/03 13:12
S29	0	save near4 (string text) with application with (phone sms email) and @ay<="2002"	US-PGPUB; USPAT; USOCR	OR	ON	2012/05/03 13:13
S30	14	save near4 (string text) with (phone sms email) and @ay<="2002"	US-PGPUB; USPAT; USOCR	OR	ON	2012/05/03 13:13
S31	198	(string text) near input with (phone sms email) and @ay<="2002"	US-PGPUB; USPAT; USOCR	OR	ON	2012/05/03 13:15
S32	272	(string text) near2 input with (phone sms email) and @ay<="2002"	US-PGPUB; USPAT; USOCR	OR	ON	2012/05/03 13:16
S33	0	(string text) near2 input with execute with (phone sms email) and @ay<="2002"	US-PGPUB; USPAT; USOCR	OR	ON	2012/05/03 13:16
S34	16	(string text) near2 input with application with (phone sms email) and @ay<="2002"	US-PGPUB; USPAT; USOCR	OR	ON	2012/05/03 13:16
S35	6	(string text) near2 input with option with (phone call sms email) and @ay<="2002"	US-PGPUB; USPAT; USOCR	OR	ON	2012/05/03 13:19
S36	412	(string text) with option with (phone call sms email) and @ay<="2002"	US-PGPUB; USPAT; USOCR	OR	ON	2012/05/03 13:20
S37	43	(string text) with option with (phone call sms email) and @ay<="2002" and "715"/$.ccls.	US-PGPUB; USPAT; USOCR	OR	ON	2012/05/03 13:20
S38	99	(number) with option with (phone call sms email contact) and @ay<="2002" and "715"/$.ccls.	US-PGPUB; USPAT; USOCR	OR	ON	2012/05/03 13:22
S39	2	input near(number) with option with (phone call sms email contact) and @ay<="2002" and "715"/$.ccls.	US-PGPUB; USPAT; USOCR	OR	ON	2012/05/03 13:23
S40	105	input near3 (number) with (phone call sms email contact) and @ay<="2002" and "715"/$.ccls.	US-PGPUB; USPAT; USOCR	OR	ON	2012/05/03 13:25
S41	8	input near3 (number) with option with (phone call sms email contact) and @ay<="2002" and "715"/$.ccls.	US-PGPUB; USPAT; USOCR	OR	ON	2012/05/03 13:25
S42	5	field with (number) with option with	US-PGPUB;	OR	ON	2012/05/03

		(phone call sms email contact) and @ay<="2002" and "715"/$.ccls.	USPAT; USOCR			13:26
S43	99	(number) with option with (phone call sms email contact) and @ay<="2002" and "715"/$.ccls.	US-PGPUB; USPAT; USOCR	OR	ON	2012/05/03 13:27
S44	11	(number) with option with list with (phone call sms email contact) and @ay<="2002" and "715"/$.ccls.	US-PGPUB; USPAT; USOCR	OR	ON	2012/05/03 13:27
S45	0	file near type with switch with (touch tap) and @ay<="2002"	US-PGPUB; USPAT; EPO; DERWENT; IBM_TDB	OR	ON	2012/05/03 14:07
S46	2202	type with switch with (touch tap) and @ay<="2002"	US-PGPUB; USPAT; EPO; DERWENT; IBM_TDB	OR	ON	2012/05/03 14:07
S47	57	(application file app icon) with type with switch with (touch tap) and @ay<="2002"	US-PGPUB; USPAT; EPO; DERWENT; IBM_TDB	OR	ON	2012/05/03 14:07
S48	46	(application file app icon) near switch with (touch tap) and @ay<="2002"	US-PGPUB; USPAT; EPO; DERWENT; IBM_TDB	OR	ON	2012/05/03 14:08
S49	39263	(application file app icon) with (second near2 (set subset)) switch with (touch tap) and @ay<="2002"	US-PGPUB; USPAT; EPO; DERWENT; IBM_TDB	OR	ON	2012/05/03 14:09
S50	13	(application file app icon) with (second near2 (set subset)) with (touch tap) and @ay<="2002"	US-PGPUB; USPAT; EPO; DERWENT; IBM_TDB	OR	ON	2012/05/03 14:09
S51	505	(application) with data with (second near2 (set subset)) and @ay<="2002"	US-PGPUB; USPAT; EPO; DERWENT; IBM_TDB	OR	ON	2012/05/03 14:13
S52	8	(application) with data with (second near2 (set subset)) with (switch) and @ay<="2002"	US-PGPUB; USPAT; EPO; DERWENT; IBM_TDB	OR	ON	2012/05/03 14:13
S53	0	(application) with data with (second near2 (set subset)) with (toggle) and @ay<="2002"	US-PGPUB; USPAT; EPO; DERWENT; IBM_TDB	OR	ON	2012/05/03 14:14
S54	41014	file near type (second near2 (set subset)) with (toggle) and @ay<="2002"	US-PGPUB; USPAT; EPO; DERWENT; IBM_TDB	OR	ON	2012/05/03 14:14
S55	0	file near type with (second near2	US-PGPUB;	OR	ON	2012/05/03

		(set subset)) with (toggle) and @ay<="2002"	USPAT; EPO; DERWENT; IBM_TDB			14:14
S56	2	file near type with (toggle) and @ay<="2002"	US-PGPUB; USPAT; EPO; DERWENT; IBM_TDB	OR	ON	2012/05/03 14:14
S57	44	file near type with (switch) and @ay<="2002"	US-PGPUB; USPAT; EPO; DERWENT; IBM_TDB	OR	ON	2012/05/03 14:15
S58	3	"20080120576"	US-PGPUB; USPAT; EPO; DERWENT; IBM_TDB	OR	ON	2012/05/03 17:57
S59	2	"20080198178"	US-PGPUB; USPAT; EPO; DERWENT; IBM_TDB	OR	ON	2012/05/03 18:00
S60	42	zoom with circ$8 with boundary	US-PGPUB; USPAT; EPO; DERWENT; IBM_TDB	OR	ON	2012/05/03 18:01
S61	22	zoom with circ$8 with boundary and @ay<="2001"	US-PGPUB; USPAT; EPO; DERWENT; IBM_TDB	OR	ON	2012/05/03 18:01
S62	26	zoom with circ$8 with boundary and @ay<="2003"	US-PGPUB; USPAT; EPO; DERWENT; IBM_TDB	OR	ON	2012/05/03 18:01
S63	0	zoom$7 with circ$8 with boundary and @ay<="2003" and "715"/$.ccls.	US-PGPUB; USPAT; EPO; DERWENT; IBM_TDB	OR	ON	2012/05/03 18:01
S64	0	zoom$7 with clockwise with boundary and @ay<="2003" and "715"/$.ccls.	US-PGPUB; USPAT; EPO; DERWENT; IBM_TDB	OR	ON	2012/05/03 18:02
S65	0	zoom$7 with clockwise same boundary and @ay<="2003" and "715"/$.ccls.	US-PGPUB; USPAT; EPO; DERWENT; IBM_TDB	OR	ON	2012/05/03 18:02
S66	2	zoom$7 with circ$7 same boundary and @ay<="2003" and "715"/$.ccls.	US-PGPUB; USPAT; EPO; DERWENT; IBM_TDB	OR	ON	2012/05/03 18:02
S67	5	zoom$7 with (clockwise radial circ$7)	US-PGPUB;	OR	ON	2012/05/03

		same2 (perimter boundary) and @ay<="2003" and "715"/$.ccls.	USPAT; EPO; DERWENT; IBM_TDB			18:04
S68	26	("20010009428" | "20020085037" | "20020101458" | "20020122072" | "20040021647" | "4931783" | "5276795" | "5581670" | "5627960" | "5634064" | "5638523" | "5666499" | "5689667" | "5760773" | "5798752" | "6037937" | "6097387" | "6118427" | "6246411" | "6262719" | "6369837" | "6549219" | "6865719" | "6918091" | "6938221" | "7058902").PN.	US-PGPUB; USPAT; USOCR	OR	ON	2012/05/03 18:05
S69	110	("5638523").URPN.	USPAT	OR	ON	2012/05/03 18:06
S70	0	lock with help with clock with setting	USPAT	OR	ON	2012/05/03 21:16
S71	1	"6346935".pn.	USPAT	OR	ON	2012/05/03 21:17
S72	6	"20040021643"	US-PGPUB; USPAT; EPO; JPO; DERWENT; IBM_TDB	OR	ON	2012/05/03 21:18
S73	2	"20020027549"	US-PGPUB; USPAT; EPO; JPO; DERWENT; IBM_TDB	OR	ON	2012/05/03 21:19
S74	0	profile with application with each with user	US-PGPUB; USPAT; EPO; JPO; DERWENT; IBM_TDB	OR	ON	2012/05/03 21:47
S75	16148	profile with application with user	US-PGPUB; USPAT; EPO; JPO; DERWENT; IBM_TDB	OR	ON	2012/05/03 21:47
S76	339	profile with application with multiple near3 user	US-PGPUB; USPAT; EPO; JPO; DERWENT; IBM_TDB	OR	ON	2012/05/03 21:47
S77	43	profile with application with multiple near3 user and "715"/$.ccls.	US-PGPUB; USPAT; EPO; JPO; DERWENT; IBM_TDB	OR	ON	2012/05/03 21:47
S78	1	profile with icons with multiple near3 user and "715"/$.ccls.	US-PGPUB; USPAT; EPO; JPO; DERWENT; IBM_TDB	OR	ON	2012/05/03 21:51
S79	38	(application software program apps widgets) with multiple near3 user near3 profile and "715"/$.ccls.	US-PGPUB; USPAT; EPO; JPO; DERWENT;	OR	ON	2012/05/03 21:52

			IBM_TDB			
S80	2	"5914709".pn.	US-PGPUB; USPAT; EPO; JPO; DERWENT; IBM_TDB	OR	ON	2012/05/03 22:05
S81	2	"6292179".pn.	US-PGPUB; USPAT; EPO; JPO; DERWENT; IBM_TDB	OR	ON	2012/05/03 22:05
S82	2	"5618232".pn.	US-PGPUB; USPAT; EPO; JPO; DERWENT; IBM_TDB	OR	ON	2012/05/03 22:06
S83	2	"20050253818"	US-PGPUB; USPAT; EPO; JPO; DERWENT; IBM_TDB	OR	ON	2012/05/03 22:06
S84	2	"7030861".pn.	US-PGPUB; USPAT; EPO; JPO; DERWENT; IBM_TDB	OR	ON	2012/05/03 22:07
S85	2	"5603053".pn.	US-PGPUB; USPAT; EPO; JPO; DERWENT; IBM_TDB	OR	ON	2012/05/03 22:07
S86	64	"240336"	US-PGPUB; USPAT; EPO; DERWENT; IBM_TDB	OR	ON	2012/05/03 22:31
S87	2	"240336"	EPO	OR	ON	2012/05/03 22:31
S88	1	"20070252822"	US-PGPUB; USPAT; USOCR	OR	ON	2012/05/09 09:52
S89	1	"20100056221"	US-PGPUB; USPAT; USOCR	OR	ON	2012/05/09 10:00
S90	3	"7475333"	US-PGPUB; USPAT; USOCR	OR	ON	2012/05/09 11:08
S91	1	"20060236264"	US-PGPUB; USPAT; USOCR	OR	ON	2012/05/09 14:13
S92	1	"5933141".pn.	US-PGPUB; USPAT; USOCR	OR	ON	2012/05/09 14:28
S93	1	"20090328122"	US-PGPUB; USPAT; USOCR	OR	ON	2012/05/09 15:05
S94	1	"20080261569"	US-PGPUB; USPAT;	OR	ON	2012/05/09 15:29

			USOCR			
S95	1	"7797226".pn.	US-PGPUB; USPAT; USOCR	OR	ON	2012/05/09 15:57
S96	1	"5347295".pn.	US-PGPUB; USPAT; USOCR	OR	ON	2012/05/10 13:54
S97	1	"5491495".pn.	US-PGPUB; USPAT; USOCR	OR	ON	2012/05/10 14:19
S98	1	"6954904".pn.	US-PGPUB; USPAT; USOCR	OR	ON	2012/05/10 18:16
S99	561	simics	US-PGPUB; USPAT; USOCR	OR	ON	2012/05/10 19:13
S100	1	simics and virtutech.as.	US-PGPUB; USPAT; USOCR	OR	ON	2012/05/10 19:13
S101	3	simics and "715"/$.ccls.	US-PGPUB; USPAT; USOCR	OR	ON	2012/05/10 19:13
S102	10	swipe with home near screen	US-PGPUB; USPAT; EPO; DERWENT; IBM_TDB	OR	ON	2012/09/11 15:10
S103	42	(gesture glide flick swipe) with home near screen	US-PGPUB; USPAT; EPO; DERWENT; IBM_TDB	OR	ON	2012/09/11 15:11
S104	0	(gesture glide flick swipe) with home near screen and @ay<="2002"	US-PGPUB; USPAT; EPO; DERWENT; IBM_TDB	OR	ON	2012/09/11 15:12
S105	99	(gesture glide flick swipe) with home and @ay<="2002"	US-PGPUB; USPAT; EPO; DERWENT; IBM_TDB	OR	ON	2012/09/11 15:12
S106	16	("5500935" | "5760773" | "20060267966" | "20050050476" | "20040021643" | "20050134578" | "5926178" | "20050190147").PN.	US-PGPUB; USPAT; EPO; DERWENT; IBM_TDB	OR	ON	2012/09/11 15:15
S107	453	activat$7 with home near3 (state screen)	US-PGPUB; USPAT; EPO; DERWENT; IBM_TDB	OR	ON	2012/09/11 15:21
S108	3	activat$7 with home near3 (state screen) with (gesture flick swipe finger glide)	US-PGPUB; USPAT; EPO; DERWENT; IBM_TDB	OR	ON	2012/09/11 15:21
S109	8615	activat$7 with (gesture flick swipe	US-PGPUB;	OR	ON	2012/09/11

		finger glide) and @ay<="2002"	USPAT; EPO; DERWENT; IBM_TDB			15:24
S110	50	activat$7 with (gesture flick swipe finger glide) with icon and @ay<="2002"	US-PGPUB; USPAT; EPO; DERWENT; IBM_TDB	OR	ON	2012/09/11 15:25
S111	5	("5345543" | "5347295" | "5386219" | "5398310" | "5404442").PN.	US-PGPUB; USPAT; USOCR	OR	ON	2012/09/11 15:33
S112	76	(start activat$7 switch) with (drag dragging slide sliding swiping gliding gesture flick swipe finger glide) with (home main idle start) near3 (screen page) and @ay<="2002"	US-PGPUB; USPAT; EPO; DERWENT; IBM_TDB	OR	ON	2012/09/11 15:40
S113	101	(start activat$7 switch) with (drag dragging slide sliding swiping gliding gesture flick swipe finger glide stroke) with (home main idle start) near3 (screen page) and @ay<="2002"	US-PGPUB; USPAT; EPO; DERWENT; IBM_TDB	OR	ON	2012/09/11 15:47
S114	2	"7657849".pn.	US-PGPUB; USPAT; EPO; DERWENT; IBM_TDB	OR	ON	2012/09/11 15:49
S115	47	("20010011308" | "20010012022" | "20020015024" | "20020196274" | "20030142138" | "20040030934" | "20040034801" | "20040085351" | "20040088568" | "20040230843" | "20040250138" | "20040260955" | "20040268267" | "20050050477" | "20050060554" | "20050079896" | "20050212760" | "20050216862" | "20050248542" | "20050253817" | "20050264833" | "20060174339" | "20060267955" | "20080034292" | "20080072172" | "5465084" | "5559961" | "5677710" | "5821933" | "5907327" | "6151208" | "6160555" | "6192478" | "6249606" | "6323846" | "6347290" | "6421453" | "6570557" | "6573883" | "6633310" | "6677932" | "6720860" | "6735695" | "7124433" | "7151843" | "7174462" | "7263670").PN.	US-PGPUB; USPAT; USOCR	OR	ON	2012/09/11 15:49
S116	0	(shortcut) with (drag dragging slide sliding swiping gliding gesture flick swipe finger glide stroke) with (home main idle start) near3 (screen page) and @ay<="2002"	US-PGPUB; USPAT; EPO; DERWENT; IBM_TDB	OR	ON	2012/09/11 15:56
S117	0	(short$cut) with (drag dragging slide sliding swiping gliding gesture flick swipe finger glide stroke) with (home main idle start) near3 (screen page) and @ay<="2002"	US-PGPUB; USPAT; EPO; DERWENT; IBM_TDB	OR	ON	2012/09/11 15:56
S118	114	(short$cut) with (drag dragging slide	US-PGPUB;	OR	ON	2012/09/11

		sliding swiping gliding gesture flick swipe finger glide stroke) and @ay<="2002"	USPAT; EPO; DERWENT; IBM_TDB			15:56
S119	2	"20080010294"	US-PGPUB; USPAT; EPO; DERWENT; IBM_TDB	OR	ON	2012/09/12 11:58
S120	766	(trend trending) with tag	US-PGPUB; USPAT; EPO; DERWENT; IBM_TDB	OR	ON	2012/09/12 12:05
S121	20	(trend trending) with tag and "715"/$.ccls.	US-PGPUB; USPAT; EPO; DERWENT; IBM_TDB	OR	ON	2012/09/12 12:05
S122	3	(trend trending) with tag same (alert notif$7 indicat$7) and "715"/$.ccls.	US-PGPUB; USPAT; EPO; DERWENT; IBM_TDB	OR	ON	2012/09/12 12:07
S123	2	"20090292723"	US-PGPUB; USPAT; EPO; DERWENT; IBM_TDB	OR	ON	2012/09/12 14:14
S124	3	"20080178067"	US-PGPUB; USPAT; EPO; DERWENT; IBM_TDB	OR	ON	2012/09/12 14:22
S125	107	"5276785"	US-PGPUB; USPAT; EPO; DERWENT; IBM_TDB	OR	ON	2012/09/13 12:24
S126	2	"5276785".pn.	US-PGPUB; USPAT; EPO; DERWENT; IBM_TDB	OR	ON	2012/09/13 12:24
S127	3	"20080040668"	US-PGPUB; USPAT; EPO; DERWENT; IBM_TDB	OR	ON	2012/09/13 12:59
S128	25	email with automatic with (greetin signature)	US-PGPUB; USPAT; EPO; DERWENT; IBM_TDB	OR	ON	2012/09/13 13:15
S129	59	email with automatic with (greeting signature)	US-PGPUB; USPAT; EPO; DERWENT; IBM_TDB	OR	ON	2012/09/13 13:18
S130	3	"20080040668"	US-PGPUB;	OR	ON	2012/09/13

			USPAT; EPO; DERWENT; IBM_TDB			13:35
S131	2	"20100191701"	US-PGPUB; USPAT; EPO; DERWENT; IBM_TDB	OR	ON	2012/09/13 13:35
S132	2	"20100191701"	US-PGPUB; USPAT; EPO; DERWENT; IBM_TDB	OR	ON	2012/09/13 13:41
S133	3	"20070263822"	US-PGPUB; USPAT; EPO; DERWENT; IBM_TDB	OR	ON	2012/09/13 14:56
S134	2	"20080082627"	US-PGPUB; USPAT; EPO; DERWENT; IBM_TDB	OR	ON	2012/09/13 15:31
S135	2	"20060149630"	US-PGPUB; USPAT; EPO; DERWENT; IBM_TDB	OR	ON	2012/09/13 15:31
S136	101	(start activat$7 switch launch) with (drag dragging slide sliding swiping gliding gesture flick swipe finger glide stroke) with (home main idle start) near3 (screen page) and @ay<="2002"	US-PGPUB; USPAT; EPO; DERWENT; IBM_TDB	OR	ON	2012/09/14 10:44
S137	364	(start activat$7 switch launch) with (drag dragging slide sliding swiping gliding gesture flick swipe glide stroke) with (icon) and @ay<="2002"	US-PGPUB; USPAT; EPO; DERWENT; IBM_TDB	OR	ON	2012/09/14 10:51
S138	2225	(start activat$7 switch launch) with (drag dragging slide sliding swiping gliding gesture flick swipe glide stroke) with (edge) and @ay<="2002"	US-PGPUB; USPAT; EPO; DERWENT; IBM_TDB	OR	ON	2012/09/14 10:58
S139	5	(start activat$7 switch launch) with (drag dragging slide sliding swiping gliding gesture flick swipe glide stroke) with (edge corner) near screen and @ay<="2002"	US-PGPUB; USPAT; EPO; DERWENT; IBM_TDB	OR	ON	2012/09/14 10:59
S140	11	(start activat$7 switch launch) with (drag dragging slide sliding swiping gliding gesture flick swipe glide stroke) with (edge corner) near3 screen and @ay<="2002"	US-PGPUB; USPAT; EPO; DERWENT; IBM_TDB	OR	ON	2012/09/14 11:00
S141	30	(start activat$7 switch launch) with (drag dragging slide sliding swiping gliding gesture flick swipe glide stroke) with (edge corner) and "715"/$.ccls. and @ay<="2002"	US-PGPUB; USPAT; EPO; DERWENT; IBM_TDB	OR	ON	2012/09/14 11:03

S142	16	("20020063696" | "20020109677" | "5644628" | "5745116" | "5943039" | "6037937" | "6310610" | "6618063").PN.	US-PGPUB; USPAT; EPO; DERWENT; IBM_TDB	OR	ON	2012/09/14 11:54
S143	2	("8127141").PN.	US-PGPUB; USPAT; EPO; DERWENT; IBM_TDB	OR	ON	2012/09/14 12:02
S144	2	swipe near gesture and @ay<="2002"	US-PGPUB; USPAT; EPO; DERWENT; IBM_TDB	OR	ON	2012/09/14 12:03
S145	1141	(start activat$7 switch launch) with (drag dragging slide sliding swiping gliding gesture flick swipe glide stroke) and "715"/$.ccls. and @ay<="2002"	US-PGPUB; USPAT; EPO; DERWENT; IBM_TDB	OR	ON	2012/09/14 12:10
S146	437	(activat$7 switch launch) with (slide sliding swiping gliding gesture flick swipe glide stroke) and "715"/$.ccls. and @ay<="2002"	US-PGPUB; USPAT; EPO; DERWENT; IBM_TDB	OR	ON	2012/09/14 12:10
S147	350	(activat$7 switch launch) with (slide sliding swiping gliding flick swipe glide stroke) and "715"/$.ccls. and @ay<="2002"	US-PGPUB; USPAT; EPO; DERWENT; IBM_TDB	OR	ON	2012/09/14 12:11
S148	206	(activat$7 switch launch) with (slide sliding swiping gliding flick swipe glide) and "715"/$.ccls. and @ay<="2002"	US-PGPUB; USPAT; EPO; DERWENT; IBM_TDB	OR	ON	2012/09/14 12:11
S149	56	(activat$7 switch launch) with (sliding swiping gliding flick swipe glide) and "715"/$.ccls. and @ay<="2002"	US-PGPUB; USPAT; EPO; DERWENT; IBM_TDB	OR	ON	2012/09/14 12:11
S150	0	(activat$7 switch launch) with (sliding swiping gliding flick swipe glide) same desk with accessories and "715"/$.ccls. and @ay<="2002"	US-PGPUB; USPAT; EPO; DERWENT; IBM_TDB	OR	ON	2012/09/14 15:31
S151	0	(activat$7 switch launch) with (sliding swiping gliding flick swipe glide) same desk with "accessories." and @ay<="2002"	US-PGPUB; USPAT; EPO; DERWENT; IBM_TDB	OR	ON	2012/09/14 15:31
S152	1	(activat$7 switch launch) with (sliding swiping gliding flick swipe glide) same desk with accessories and @ay<="2002"	US-PGPUB; USPAT; EPO; DERWENT; IBM_TDB	OR	ON	2012/09/14 15:31
S153	14905	"swipe!"	US-PGPUB; USPAT; EPO; DERWENT; IBM_TDB	OR	ON	2012/09/14 15:31

S154	0	"swipe" with DA	US-PGPUB; USPAT; EPO; DERWENT; IBM_TDB	OR	ON	2012/09/14 15:32
S155	0	"swipe" with Desk near accessor$6	US-PGPUB; USPAT; EPO; DERWENT; IBM_TDB	OR	ON	2012/09/14 15:32
S156	0	launch with desk near accessor$6	US-PGPUB; USPAT; EPO; DERWENT; IBM_TDB	OR	ON	2012/09/14 15:32
S157	0	shortcut with (sliding swiping gliding flick swipe glide) and "715"/$.ccls. and @ay<="2002"	US-PGPUB; USPAT; EPO; DERWENT; IBM_TDB	OR	ON	2012/09/14 15:33
S158	2	short$cut with (sliding swiping gliding flick swipe glide) and "715"/$.ccls. and @ay<="2002"	US-PGPUB; USPAT; EPO; DERWENT; IBM_TDB	OR	ON	2012/09/14 15:34
S159	1007	(home desktop) with (sliding swiping gliding flick swipe glide) and @ay<="2002"	US-PGPUB; USPAT; EPO; DERWENT; IBM_TDB	OR	ON	2012/09/17 12:55
S160	8	(home desktop) with (sliding swiping gliding flick swipe glide) and @ay<="2002" and "715"/$.ccls.	US-PGPUB; USPAT; EPO; DERWENT; IBM_TDB	OR	ON	2012/09/17 12:55
S161	0	(home desktop) with (sliding swiping gliding flick swipe glide) with (activat$6 launch short$cut) and @ay<="2002" and "715"/$.ccls.	US-PGPUB; USPAT; EPO; DERWENT; IBM_TDB	OR	ON	2012/09/17 13:31
S162	17	(home desktop) with (sliding swiping gliding flick swipe glide) with (activat$6 launch short$cut) and @ay<="2002"	US-PGPUB; USPAT; EPO; DERWENT; IBM_TDB	OR	ON	2012/09/17 13:31
S163	27	(sliding swiping gliding flick swipe glide) with (activat$6 launch short$cut) and @ay<="2002" and "715"/$.ccls.	US-PGPUB; USPAT; EPO; DERWENT; IBM_TDB	OR	ON	2012/09/17 13:32
S164	81	"5886697"	US-PGPUB; USPAT; EPO; DERWENT; IBM_TDB	OR	ON	2012/09/17 13:50
S165	2	"5886697".pn.	US-PGPUB; USPAT; EPO; DERWENT; IBM_TDB	OR	ON	2012/09/17 13:50

S166	19034809	(activat$7 switch launch) with (app application software icon) with "not" with (click tap)@ay<="2002"	US-PGPUB; USPAT; EPO; DERWENT; IBM_TDB	OR	ON	2012/09/17 14:46
S167	0	(activat$7 switch launch) with (app application software icon) with "not" with (click tap) and @ay<="2002"	US-PGPUB; USPAT; EPO; DERWENT; IBM_TDB	OR	ON	2012/09/17 14:46
S168	0	(activat$7 switch launch) with "not" with (click tap) and @ay<="2002"	US-PGPUB; USPAT; EPO; DERWENT; IBM_TDB	OR	ON	2012/09/17 14:46
S169	0	(activat$7 switch launch) with "not" with (click clicking tap tapping) and @ay<="2002"	US-PGPUB; USPAT; EPO; DERWENT; IBM_TDB	OR	ON	2012/09/17 14:46
S170	0	(activat$7 launch) with "not" with (click clicking tap tapping) and @ay<="2002"	US-PGPUB; USPAT; EPO; DERWENT; IBM_TDB	OR	ON	2012/09/17 14:47
S171	135	(activat$7 launch) with (alone "not" "without") with (click clicking tap tapping) and @ay<="2002"	US-PGPUB; USPAT; EPO; DERWENT; IBM_TDB	OR	ON	2012/09/17 14:47
S172	23	("20020087661" | "20030200505" | "5600778" | "5689667" | "5721853" | "5745116" | "5790115" | "5805167" | "6028271" | "6057844" | "6094197" | "6101498" | "6104400" | "6239803" | "6337698" | "6429846" | "6445383" | "6496206" | "6618063" | "6707443" | "6819345" | "6915489" | "7003734").PN.	US-PGPUB; USPAT; USOCR	OR	ON	2012/09/17 15:04
S173	16	("20020063696" | "20020109677" | "5745116" | "5943039" | "6037937" | "6310610" | "6618063" | "7199786").PN.	US-PGPUB; USPAT; EPO; DERWENT; IBM_TDB	OR	ON	2013/02/21 12:48
S174	2	"5406307".pn.	US-PGPUB; USPAT; EPO; DERWENT; IBM_TDB	OR	ON	2013/02/21 12:51
S175	166	(home) near (screen state) with transition	US-PGPUB; USPAT; EPO; DERWENT; IBM_TDB	OR	ON	2013/02/21 13:14
S176	31	(home) near (screen state) with transition and "715"/$.ccls.	US-PGPUB; USPAT; EPO; DERWENT; IBM_TDB	OR	ON	2013/02/21 13:27

S177	2	"8127141".pn.	US-PGPUB; USPAT; EPO; DERWENT; IBM_TDB	OR	ON	2013/02/21 13:30
S178	10	("20010009583" | "5465084" | "5588056" | "5699514" | "5928364" | "5991882" | "6212638" | "6253248" | "6574377" | "7219368").PN.	US-PGPUB; USPAT; USOCR	OR	ON	2013/02/21 13:31
S179	467	disable near touch	US-PGPUB; USPAT; USOCR	OR	ON	2013/02/21 13:33
S180	3422	"20080903"	US-PGPUB; USPAT; USOCR	OR	ON	2013/02/21 13:39
S181	3289	"20080903"	EPO	OR	ON	2013/02/21 13:39
S182	0	"200800903"	EPO	OR	ON	2013/02/21 13:39
S183	0	"200800903"	US-PGPUB; USPAT; EPO; IBM_TDB	OR	ON	2013/02/21 13:39
S184	0	"2007150842"	US-PGPUB; USPAT; EPO; IBM_TDB	OR	ON	2013/02/21 13:40
S185	2	"20070150842"	US-PGPUB; USPAT; EPO; IBM_TDB	OR	ON	2013/02/21 13:40
S186	0	"20050322549"	US-PGPUB; USPAT; EPO; IBM_TDB	OR	ON	2013/02/21 13:41
S187	0	"200500322549"	US-PGPUB; USPAT; EPO; IBM_TDB	OR	ON	2013/02/21 13:41
S188	0	"20050322549"	US-PGPUB; USPAT; EPO; DERWENT; IBM_TDB	OR	ON	2013/02/21 13:41
S189	34	"6392999"	US-PGPUB; USPAT; EPO; DERWENT; IBM_TDB	OR	ON	2013/02/21 13:46
S190	2	"6392999".pn.	US-PGPUB; USPAT; EPO; DERWENT; IBM_TDB	OR	ON	2013/02/21 13:46
S191	2	"5619555".pn.	US-PGPUB; USPAT; EPO; DERWENT;	OR	ON	2013/02/21 13:48

			IBM_TDB			
S192	69	"5644628"	US-PGPUB; USPAT; EPO; DERWENT; IBM_TDB	OR	ON	2013/02/21 13:49
S193	2	"5644628".pn.	US-PGPUB; USPAT; EPO; DERWENT; IBM_TDB	OR	ON	2013/02/21 13:49
S194	2	"5701340".pn.	US-PGPUB; USPAT; EPO; DERWENT; IBM_TDB	OR	ON	2013/02/21 13:49
S195	2	"6570557".pn.	US-PGPUB; USPAT; EPO; DERWENT; IBM_TDB	OR	ON	2013/02/21 13:50
S196	0	"67271932".pn.	US-PGPUB; USPAT; EPO; DERWENT; IBM_TDB	OR	ON	2013/02/21 13:57
S197	141	(UI GUI) with lock and "715"/$.ccls.	US-PGPUB; USPAT; EPO; DERWENT; IBM_TDB	OR	ON	2013/02/21 14:04
S198	34	(UI GUI) with lock and "715"/$.ccls. and @ay<="2002"	US-PGPUB; USPAT; EPO; DERWENT; IBM_TDB	OR	ON	2013/02/21 14:09
S199	147	(UI GUI screen) with lock and "715"/$.ccls. and @ay<="2002"	US-PGPUB; USPAT; EPO; DERWENT; IBM_TDB	OR	ON	2013/02/21 14:09
S200	6	(UI GUI screen) with (unlock lock) same (gesture slide glide swipe) and "715"/$.ccls. and @ay<="2002"	US-PGPUB; USPAT; EPO; DERWENT; IBM_TDB	OR	ON	2013/02/21 14:10
S201	11	(UI GUI screen state) with (home) same (gesture slide glide swipe) and "715"/$.ccls. and @ay<="2002"	US-PGPUB; USPAT; EPO; DERWENT; IBM_TDB	OR	ON	2013/02/21 14:15
S202	44	(UI GUI screen state) with (main home) same (gesture slide glide swipe) and "715"/$.ccls. and @ay<="2002"	US-PGPUB; USPAT; EPO; DERWENT; IBM_TDB	OR	ON	2013/02/21 14:15
S203	2	(UI GUI screen state) with (unlock) same (gesture slide glide swipe) and "715"/$.ccls. and @ay<="2002"	US-PGPUB; USPAT; EPO; DERWENT;	OR	ON	2013/02/21 14:23

			IBM_TDB			
S204	39	(UI GUI screen state) with (unlock) and "715"/$.ccls. and @ay<="2002"	US-PGPUB; USPAT; EPO; DERWENT; IBM_TDB	OR	ON	2013/02/21 14:27
S205	236	(UI GUI screen state) with (lock) and "715"/$.ccls. and @ay<="2002"	US-PGPUB; USPAT; EPO; DERWENT; IBM_TDB	OR	ON	2013/02/21 14:27
S206	0	(UI GUI screen state) with (lock) with remove and "715"/$.ccls. and @ay<="2002"	US-PGPUB; USPAT; EPO; DERWENT; IBM_TDB	OR	ON	2013/02/21 14:27
S207	236	(UI GUI screen state) with (lock) and "715"/$.ccls. and @ay<="2002"	US-PGPUB; USPAT; EPO; DERWENT; IBM_TDB	OR	ON	2013/02/21 14:27
S208	2	(UI GUI screen state) with (lock) with blank and "715"/$.ccls. and @ay<="2002"	US-PGPUB; USPAT; EPO; DERWENT; IBM_TDB	OR	ON	2013/02/21 14:28
S209	236	(UI GUI screen state) with (lock) and "715"/$.ccls. and @ay<="2002"	US-PGPUB; USPAT; EPO; DERWENT; IBM_TDB	OR	ON	2013/02/21 14:30
S210	2	"6812940".pn.	US-PGPUB; USPAT; EPO; DERWENT; IBM_TDB	OR	ON	2013/02/21 14:54
S211	3	("4825019" | "5825353" | "6408191").PN.	US-PGPUB; USPAT; USOCR	OR	ON	2013/02/21 14:54
S212	5	(unlock) same (gesture slide glide swipe) and "715"/$.ccls. and @ay<="2002"	US-PGPUB; USPAT; EPO; DERWENT; IBM_TDB	OR	ON	2013/02/21 15:02
S213	17	(unlock) same2 (gesture slide glide swipe) and "715"/$.ccls. and @ay<="2002"	US-PGPUB; USPAT; EPO; DERWENT; IBM_TDB	OR	ON	2013/02/21 15:03
S214	32	(log$in) same2 (gesture slide glide swipe) and "715"/$.ccls. and @ay<="2002"	US-PGPUB; USPAT; EPO; DERWENT; IBM_TDB	OR	ON	2013/02/21 15:05
S215	2	(log$in) with (gesture slide glide swipe) and "715"/$.ccls. and @ay<="2002"	US-PGPUB; USPAT; EPO; DERWENT; IBM_TDB	OR	ON	2013/02/21 15:05

S216	93768	(log$in) with2 (gesture slide glide swipe) and "715"/$.ccls. and @ay<="2002"	US-PGPUB; USPAT; EPO; DERWENT; IBM_TDB	OR	ON	2013/02/21 15:06
S217	10	(log$in) same (gesture slide glide swipe) and "715"/$.ccls. and @ay<="2002"	US-PGPUB; USPAT; EPO; DERWENT; IBM_TDB	OR	ON	2013/02/21 15:06
S218	519381	grid (gesture slide glide swipe) and "715"/$.ccls. and @ay<="2002"	US-PGPUB; USPAT; EPO; DERWENT; IBM_TDB	OR	ON	2013/02/21 15:08
S219	15	grid with (gesture slide glide swipe) and "715"/$.ccls. and @ay<="2002"	US-PGPUB; USPAT; EPO; DERWENT; IBM_TDB	OR	ON	2013/02/21 15:08
S220	10198	expan$7 with vertical with horizontal	US-PGPUB; USPAT; EPO; DERWENT; IBM_TDB	OR	ON	2013/02/22 11:06
S221	13124	expan$7 with vertical$4 with horizontal$4	US-PGPUB; USPAT; EPO; DERWENT; IBM_TDB	OR	ON	2013/02/22 11:06
S222	250	expan$7 with vertical$4 with horizontal$4 and "715"/$.ccls.	US-PGPUB; USPAT; EPO; DERWENT; IBM_TDB	OR	ON	2013/02/22 11:06
S223	2	expan$7 with vertical$4 with horizontal$4 with toggle and "715"/$.ccls.	US-PGPUB; USPAT; EPO; DERWENT; IBM_TDB	OR	ON	2013/02/22 11:12
S224	3	expan$7 with vertical$4 with horizontal$4 with (switch toggle) and "715"/$.ccls.	US-PGPUB; USPAT; EPO; DERWENT; IBM_TDB	OR	ON	2013/02/22 11:14
S225	14	menu with vertical$4 with horizontal$4 with (switch toggle) and "715"/$.ccls.	US-PGPUB; USPAT; EPO; DERWENT; IBM_TDB	OR	ON	2013/02/22 11:15
S226	2	menu with inline with (switch toggle) and "715"/$.ccls.	US-PGPUB; USPAT; EPO; DERWENT; IBM_TDB	OR	ON	2013/02/22 11:21
S227	1	(pop$out side) with inline with (switch toggle) and "715"/$.ccls.	US-PGPUB; USPAT; EPO; DERWENT; IBM_TDB	OR	ON	2013/02/22 11:22

S228	1	(pop$out side) with inline with (switch toggle orientation) and "715"/$.ccls.	US-PGPUB; USPAT; EPO; DERWENT; IBM_TDB	OR	ON	2013/02/22 11:22
S229	12	(pop$out side) with expan$7 with (switch toggle orientation) and "715"/$.ccls.	US-PGPUB; USPAT; EPO; DERWENT; IBM_TDB	OR	ON	2013/02/22 11:24
S230	18	(horizontal vertical side) with expan$7 with (switch toggle orientation) and "715"/$.ccls.	US-PGPUB; USPAT; EPO; DERWENT; IBM_TDB	OR	ON	2013/02/22 11:25
S231	24	(horizontal$ vertical$ side) with expan$7 with (switch toggle orientation) and "715"/$.ccls.	US-PGPUB; USPAT; EPO; DERWENT; IBM_TDB	OR	ON	2013/02/22 11:25
S232	6	("2005/0149873").URPN.	USPAT	OR	ON	2013/02/22 11:26
S233	1	pitaro.xa,xp. and expan$7 with horizont$7	USPAT	OR	ON	2013/02/22 11:28
S234	68	pitaro.xa,xp. and expan$7	USPAT	OR	ON	2013/02/22 11:29
S235	34	pitaro.xa,xp. and (tree hiearch$6)	USPAT	OR	ON	2013/02/22 11:36
S236	36	pitaro.xa,xp. and horizont$5 with vertical$6	USPAT	OR	ON	2013/02/22 11:38
S237	36	tree same horizont$7 with vertical$7 with expan$7	USPAT	OR	ON	2013/02/22 11:40
S238	64	tree same horizont$7 with vertical$7 with expan$7	US-PGPUB; USPAT; DERWENT; IBM_TDB	OR	ON	2013/02/22 11:40
S239	16	tree same horizont$7 with vertical$7 with expan$7 and "715"/$.ccls.	US-PGPUB; USPAT; DERWENT; IBM_TDB	OR	ON	2013/02/22 11:41
S240	3	Pitaro.xa,xp. and pivot	US-PGPUB; USPAT; DERWENT; IBM_TDB	OR	ON	2013/02/22 11:41
S241	2124	(hierach$8 tree) with pivot	US-PGPUB; USPAT; DERWENT; IBM_TDB	OR	ON	2013/02/22 11:42
S242	8	(hierach$8 tree) with pivot and "715"/$.ccls.	US-PGPUB; USPAT; DERWENT; IBM_TDB	OR	ON	2013/02/22 11:42
S243	196	(hierach$8 tree) and pivot and "715"/$.ccls.	US-PGPUB; USPAT; DERWENT; IBM_TDB	OR	ON	2013/02/22 11:44
S244	28	(hierach$8 tree) and pivot near point and "715"/$.ccls.	US-PGPUB; USPAT;	OR	ON	2013/02/22 11:44

			DERWENT; IBM_TDB			
S245	3	(propagat$ interpolat$6 infer$8) with keyframes with (intermediate middle) and "715"/$.ccls.	US-PGPUB; USPAT; DERWENT; IBM_TDB	OR	ON	2013/02/22 11:51
S246	3	(propagat$ interpolat$6 infer$8) with key$frames with (intermediate middle) and "715"/$.ccls.	US-PGPUB; USPAT; DERWENT; IBM_TDB	OR	ON	2013/02/22 11:52
S247	13	(propagat$ interpolat$6 infer$8) with (((r representative key) near frame) key$frames) with (intermediate middle) and "715"/$.ccls.	US-PGPUB; USPAT; DERWENT; IBM_TDB	OR	ON	2013/02/22 11:53
S248	54	overlap$7 with window with resize	US-PGPUB; USPAT; DERWENT; IBM_TDB	OR	ON	2013/02/22 12:02
S249	0	overlap$7 with window with resize same threshold	US-PGPUB; USPAT; DERWENT; IBM_TDB	OR	ON	2013/02/22 12:02
S250	133	overlap$7 with (object element window) with (size resize) same threshold	US-PGPUB; USPAT; DERWENT; IBM_TDB	OR	ON	2013/02/22 12:02
S251	11	overlap$7 with (object element window) with (size resize) same threshold and "715"/$.ccls.	US-PGPUB; USPAT; DERWENT; IBM_TDB	OR	ON	2013/02/22 12:04
S252	3	overlap$7 with (object element window) with (overlap$6) near2 threshold and "715"/$.ccls.	US-PGPUB; USPAT; DERWENT; IBM_TDB	OR	ON	2013/02/22 12:15
S253	3	(object element window) with (overlap$6) near2 threshold and "715"/$.ccls.	US-PGPUB; USPAT; DERWENT; IBM_TDB	OR	ON	2013/02/22 12:15
S254	139	grid with application with icons	US-PGPUB; USPAT; DERWENT; IBM_TDB	OR	ON	2013/02/22 12:23
S255	0	grid with application with icons and "7156"/$.ccls.	US-PGPUB; USPAT; DERWENT; IBM_TDB	OR	ON	2013/02/22 12:23
S256	54	grid with application with icons and "715"/$.ccls.	US-PGPUB; USPAT; DERWENT; IBM_TDB	OR	ON	2013/02/22 12:23
S257	2	"20060041848"	US-PGPUB; USPAT; DERWENT; IBM_TDB	OR	ON	2013/02/22 13:41
S258	3	"20050039137"	US-PGPUB; USPAT; DERWENT; IBM_TDB	OR	ON	2013/02/22 13:42

S259	2	"20020015064".pn.	US-PGPUB; USPAT; DERWENT; IBM_TDB	OR	ON	2013/02/24 21:32
S260	2	"20020015064"	US-PGPUB; USPAT; DERWENT; IBM_TDB	OR	ON	2013/02/24 21:33
S261	817	(swipe) near gesture	US-PGPUB; USPAT; DERWENT; IBM_TDB	OR	ON	2013/02/24 21:49
S262	390	(swipe) near gesture and "715"/$.ccls.	US-PGPUB; USPAT; DERWENT; IBM_TDB	OR	ON	2013/02/24 21:49
S263	2	(swipe) near gesture and "715"/$.ccls. and @ay<="2002"	US-PGPUB; USPAT; DERWENT; IBM_TDB	OR	ON	2013/02/24 21:49
S264	5	(swipe slide glide) near gesture and "715"/$.ccls. and @ay<="2002"	US-PGPUB; USPAT; DERWENT; IBM_TDB	OR	ON	2013/02/24 21:51
S265	6	(swipe slide glide) near3 gesture and "715"/$.ccls. and @ay<="2002"	US-PGPUB; USPAT; DERWENT; IBM_TDB	OR	ON	2013/02/24 21:52
S266	16	(swipe slide glide) with gesture and "715"/$.ccls. and @ay<="2002"	US-PGPUB; USPAT; DERWENT; IBM_TDB	OR	ON	2013/02/24 21:52
S267	0	(swipe slide glide) with away with icon and "715"/$.ccls. and @ay<="2002"	US-PGPUB; USPAT; DERWENT; IBM_TDB	OR	ON	2013/02/24 21:56
S268	26793	application with icon	US-PGPUB; USPAT; EPO; DERWENT; IBM_TDB	OR	ON	2013/02/24 22:13
S269	1722	application with icon with bar	US-PGPUB; USPAT; EPO; DERWENT; IBM_TDB	OR	ON	2013/02/24 22:13
S270	657	application with icon with bar and "715"/$.ccls.	US-PGPUB; USPAT; EPO; DERWENT; IBM_TDB	OR	ON	2013/02/24 22:13
S271	183	application with icon with bar and "715"/$.ccls. and @ay<="2002"	US-PGPUB; USPAT; EPO; DERWENT; IBM_TDB	OR	ON	2013/02/24 22:14
S272	62	lock with path and "715"/$.ccls.	US-PGPUB; USPAT; EPO;	OR	ON	2013/02/24 22:15

			DERWENT; IBM_TDB			
S273	0	lock with path with trace and "715"/$.ccls.	US-PGPUB; USPAT; EPO; DERWENT; IBM_TDB	OR	ON	2013/02/24 22:18
S274	1	(unlock lock) with path with trace and "715"/$.ccls.	US-PGPUB; USPAT; EPO; DERWENT; IBM_TDB	OR	ON	2013/02/24 22:18
S275	12	(unlock lock) with trace and "715"/$.ccls.	US-PGPUB; USPAT; EPO; DERWENT; IBM_TDB	OR	ON	2013/02/24 22:20
S276	2	"5559961".pn.	US-PGPUB; USPAT; EPO; DERWENT; IBM_TDB	OR	ON	2013/02/24 22:30
S277	252	graphical near password	US-PGPUB; USPAT; EPO; DERWENT; IBM_TDB	OR	ON	2013/02/24 22:30
S278	37	graphical near password and "715"/$.ccls.	US-PGPUB; USPAT; EPO; DERWENT; IBM_TDB	OR	ON	2013/02/24 22:30
S279	13	graphical near password and "715"/$.ccls. and @ay<="2002"	US-PGPUB; USPAT; EPO; DERWENT; IBM_TDB	OR	ON	2013/02/24 22:31
S280	81	("5559961").URPN.	USPAT	OR	ON	2013/02/24 22:34
S281	10	("20020029341" | "20040085351" | "20040245352" | "5406307" | "5559961" | "5796183" | "6209104" | "6476797" | "6720860" | "6862687").PN.	US-PGPUB; USPAT; USOCR	OR	ON	2013/02/24 22:41
S282	1	"7818691".pn.	US-PGPUB; USPAT; USOCR	OR	ON	2013/02/24 22:49
S283	114	main near menu with bar and "715"/$.ccls. and @ay<="2002"	US-PGPUB; USPAT; EPO; DERWENT; IBM_TDB	OR	ON	2013/02/25 10:39
S284	0	main near menu with bar and "715"/864.ccls. and @ay<="2002"	US-PGPUB; USPAT; EPO; DERWENT; IBM_TDB	OR	ON	2013/02/25 10:42
S285	85	bar and "715"/864.ccls. and @ay<="2002"	US-PGPUB; USPAT;	OR	ON	2013/02/25 10:42

			EPO; DERWENT; IBM_TDB			
S286	146	mode and "715"/864.ccls. and @ay<="2002"	US-PGPUB; USPAT; EPO; DERWENT; IBM_TDB	OR	ON	2013/02/25 10:44
S287	0	"13345383"	USPAT	OR	OFF	2013/07/23 11:15
S288	646	threshold with distance with edge	USPAT	OR	OFF	2013/07/23 11:18
S289	24	threshold with distance with edge and "715"/$.ccls.	USPAT	OR	OFF	2013/07/23 11:18
S290	61	threshold with distance with edge and "715"/$.ccls.	US-PGPUB; USPAT; USOCR; EPO; DERWENT	OR	OFF	2013/07/23 11:19
S291	2	threshold with distance near second with edge and "715"/$.ccls.	US-PGPUB; USPAT; USOCR; EPO; DERWENT	OR	OFF	2013/07/23 11:21
S292	5	threshold with distance near2 second with edge and "715"/$.ccls.	US-PGPUB; USPAT; USOCR; EPO; DERWENT	OR	OFF	2013/07/23 11:22
S293	2	"7665043".pn.	US-PGPUB; USPAT; USOCR; EPO; DERWENT	OR	OFF	2013/07/23 11:41
S294	16	("5785439" | "5821930" | "5898434" | "6304261" | "6646633" | "7304638").PN.	US-PGPUB; USPAT; USOCR; EPO; DERWENT	OR	OFF	2013/07/23 11:44
S295	1	"20060156256"	USPAT	OR	OFF	2013/07/23 12:32
S296	1	"20050079896"	USPAT	OR	OFF	2013/07/23 12:33
S297	1	"5406307".PN.	USPAT	OR	OFF	2013/07/23 14:31
S298	1	"7665043".pn.	USPAT	OR	OFF	2013/07/23 14:49
S299	4	("20040085351" | "20050253817" | "20060012577" | "20060117197").PN.	US-PGPUB; USPAT; USOCR	OR	ON	2013/12/01 22:32
S300	7249	touch with strip	US-PGPUB; USPAT; FPRS; EPO; DERWENT	OR	ON	2013/12/01 22:33
S301	33	touch with strip with (drag slide glide) and @ay<="2002"	US-PGPUB; USPAT; FPRS;	OR	ON	2013/12/01 22:35

			EPO; DERWENT			
S302	221	touch with (edge strip) with (drag slide glide) and @ay<="2002"	US-PGPUB; USPAT; FPRS; EPO; DERWENT	OR	ON	2013/12/01 22:36
S303	27	touch with (edge strip) with (drag slide glide) and @ay<="2002" and ("715"/$.ccls. "345"/$.ccls.)	US-PGPUB; USPAT; FPRS; EPO; DERWENT	OR	ON	2013/12/01 22:36
S304	421	(edge strip) with (drag slide glide) and @ay<="2002" and ("715"/$.ccls. "345"/$.ccls.)	US-PGPUB; USPAT; FPRS; EPO; DERWENT	OR	ON	2013/12/01 22:40
S305	1226	(edge strip) with (drag slide glide swipe touch) and @ay<="2002" and ("715"/$.ccls. "345"/$.ccls.)	US-PGPUB; USPAT; FPRS; EPO; DERWENT	OR	ON	2013/12/01 22:40
S306	602	(edge strip) near3 (drag slide glide swipe touch) and @ay<="2002" and ("715"/$.ccls. "345"/$.ccls.)	US-PGPUB; USPAT; FPRS; EPO; DERWENT	OR	ON	2013/12/01 22:41
S307	5	(edge strip) near3 (drag slide glide swipe touch) same lock and @ay<="2002" and ("715"/$.ccls. "345"/$.ccls.)	US-PGPUB; USPAT; FPRS; EPO; DERWENT	OR	ON	2013/12/01 22:41
S308	2	(strip) with (drag slide glide swipe touch) same lock and @ay<="2002" and ("715"/$.ccls. "345"/$.ccls.)	US-PGPUB; USPAT; FPRS; EPO; DERWENT	OR	ON	2013/12/01 22:42
S309	20	(strip) with (drag slide glide swipe touch) with edge and @ay<="2002" and ("715"/$.ccls. "345"/$.ccls.)	US-PGPUB; USPAT; FPRS; EPO; DERWENT	OR	ON	2013/12/01 22:43
S310	2	(strip) with (drag slide glide swipe touch) with gesture and @ay<="2002" and ("715"/$.ccls. "345"/$.ccls.)	US-PGPUB; USPAT; FPRS; EPO; DERWENT	OR	ON	2013/12/01 22:48
S311	236	(strip) with (drag slide glide swipe touch gesture) and @ay<="2002" and ("715"/$.ccls. "345"/$.ccls.)	US-PGPUB; USPAT; FPRS; EPO; DERWENT	OR	ON	2013/12/01 22:49
S312	1274	(strip edge) with (drag slide glide swipe touch gesture) and @ay<="2002" and ("715"/$.ccls. "345"/$.ccls.)	US-PGPUB; USPAT; FPRS; EPO; DERWENT	OR	ON	2013/12/01 22:49
S313	251	(strip edge) with (drag slide glide swipe touch gesture) with display and @ay<="2002" and ("715"/$.ccls.	US-PGPUB; USPAT; FPRS;	OR	ON	2013/12/01 22:50

		"345"/$.ccls.)	EPO; DERWENT			
S314	5	(strip zone region area) near edge with (drag slide glide swipe touch gesture) with display and @ay<="2002" and ("715"/$.ccls. "345"/$.ccls.)	US-PGPUB; USPAT; FPRS; EPO; DERWENT	OR	ON	2013/12/01 22:57
S315	8	(strip zone region area) near edge same touch with display and @ay<="2002" and ("715"/$.ccls. "345"/$.ccls.)	US-PGPUB; USPAT; FPRS; EPO; DERWENT	OR	ON	2013/12/01 23:01
S316	129	(strip zone region area) near3 edge same touch and @ay<="2002" and ("715"/$.ccls. "345"/$.ccls.)	US-PGPUB; USPAT; FPRS; EPO; DERWENT	OR	ON	2013/12/01 23:03
S317	2	"5821930".pn.	US-PGPUB; USPAT; FPRS; EPO; DERWENT	OR	ON	2013/12/01 23:09
S318	2	"5406307".pn.	US-PGPUB; USPAT; FPRS; EPO; DERWENT	OR	ON	2013/12/01 23:11

EAST Search History (Interference)

<This search history is empty>

12/2/2013 12:14:28 AM
C:\Users\rpitaro\Documents\EAST\Workspaces\13310755.wsp

PTO/SB/08a (01-10)
Approved for use through 07/31/2012. OMB 0651-0031
U.S. Patent and Trademark Office; U.S. DEPARTMENT OF COMMERCE

Under the Paperwork Reduction Act of 1995, no persons are required to respond to a collection of information unless it contains a valid OMB control number.

INFORMATION DISCLOSURE STATEMENT BY APPLICANT

(Not for submission under 37 CFR 1.99)

Application Number	13710755
Filing Date	2011-12-04
First Named Inventor	Magnus Goertz
Art Unit	2171
Examiner Name	Ryan F. Pitaro
Attorney Docket Number	NEONODE.P039

U.S.PATENTS

Examiner Initial*	Cite No	Patent Number	Kind Code[1]	Issue Date	Name of Patentee or Applicant of cited Document	Pages,Columns,Lines where Relevant Passages or Relevant Figures Appear
/R.P./	1	6765559	B2	2004-07-20	Hayakawa	
/R.P./	2	6664983	B2	2003-12-16	Ludoplh	

If you wish to add additional U.S. Patent citation information please click the Add button.

U.S.PATENT APPLICATION PUBLICATIONS

Examiner Initial*	Cite No	Publication Number	Kind Code[1]	Publication Date	Name of Patentee or Applicant of cited Document	Pages,Columns,Lines where Relevant Passages or Relevant Figures Appear
	1					

If you wish to add additional U.S. Published Application citation information please click the Add button.

FOREIGN PATENT DOCUMENTS

Examiner Initial*	Cite No	Foreign Document Number[3]	Country Code[2] i	Kind Code[4]	Publication Date	Name of Patentee or Applicant of cited Document	Pages,Columns,Lines where Relevant Passages or Relevant Figures Appear	T[5]
	1							☐

If you wish to add additional Foreign Patent Document citation information please click the Add button

NON-PATENT LITERATURE DOCUMENTS

INFORMATION DISCLOSURE STATEMENT BY APPLICANT (**Not for submission under 37 CFR 1.99**)		
	Application Number	13710755
	Filing Date	2011-12-04
	First Named Inventor	Magnus Goertz
	Art Unit	2171
	Examiner Name	Ryan F. Pitaro
	Attorney Docket Number	NEONODE.P039

Examiner Initials*	Cite No	Include name of the author (in CAPITAL LETTERS), title of the article (when appropriate), title of the item (book, magazine, journal, serial, symposium, catalog, etc), date, pages(s), volume-issue number(s), publisher, city and/or country where published.	T[5]
/R.P./	1	Launch 'em 3.02, October 8, 2001, Synergy Solutions Inc., pages 1 - 20.	☐

If you wish to add additional non-patent literature document citation information please click the Add button

EXAMINER SIGNATURE

Examiner Signature	/Ryan Pitaro/	Date Considered	12/02/2013

*EXAMINER: Initial if reference considered, whether or not citation is in conformance with MPEP 609. Draw line through a citation if not in conformance and not considered. Include copy of this form with next communication to applicant.

[1] See Kind Codes of USPTO Patent Documents at www.USPTO.GOV or MPEP 901.04. [2] Enter office that issued the document, by the two-letter code (WIPO Standard ST.3). [3] For Japanese patent documents, the indication of the year of the reign of the Emperor must precede the serial number of the patent document. [4] Kind of document by the appropriate symbols as indicated on the document under WIPO Standard ST.16 if possible. [5] Applicant is to place a check mark here if English language translation is attached.

INFORMATION DISCLOSURE STATEMENT BY APPLICANT (**Not for submission under 37 CFR 1.99**)		
	Application Number	13710755
	Filing Date	2011-12-04
	First Named Inventor	Magnus Goertz
	Art Unit	2171
	Examiner Name	Ryan F. Pitaro
	Attorney Docket Number	NEONODE.P039

CERTIFICATION STATEMENT

Please see 37 CFR 1.97 and 1.98 to make the appropriate selection(s):

☐ That each item of information contained in the information disclosure statement was first cited in any communication from a foreign patent office in a counterpart foreign application not more than three months prior to the filing of the information disclosure statement. See 37 CFR 1.97(e)(1).

OR

☐ That no item of information contained in the information disclosure statement was cited in a communication from a foreign patent office in a counterpart foreign application, and, to the knowledge of the person signing the certification after making reasonable inquiry, no item of information contained in the information disclosure statement was known to any individual designated in 37 CFR 1.56(c) more than three months prior to the filing of the information disclosure statement. See 37 CFR 1.97(e)(2).

☐ See attached certification statement.

☒ The fee set forth in 37 CFR 1.17 (p) has been submitted herewith.

☒ A certification statement is not submitted herewith.

SIGNATURE

A signature of the applicant or representative is required in accordance with CFR 1.33, 10.18. Please see CFR 1.4(d) for the form of the signature.

Signature	/Marc A. Berger/	Date (YYYY-MM-DD)	2013-10-25
Name/Print	Marc A. Berger	Registration Number	44029

This collection of information is required by 37 CFR 1.97 and 1.98. The information is required to obtain or retain a benefit by the public which is to file (and by the USPTO to process) an application. Confidentiality is governed by 35 U.S.C. 122 and 37 CFR 1.14. This collection is estimated to take 1 hour to complete, including gathering, preparing and submitting the completed application form to the USPTO. Time will vary depending upon the individual case. Any comments on the amount of time you require to complete this form and/or suggestions for reducing this burden, should be sent to the Chief Information Officer, U.S. Patent and Trademark Office, U.S. Department of Commerce, P.O. Box 1450, Alexandria, VA 22313-1450. DO NOT SEND FEES OR COMPLETED FORMS TO THIS ADDRESS. **SEND TO: Commissioner for Patents, P.O. Box 1450, Alexandria, VA 22313-1450.**

Privacy Act Statement

The Privacy Act of 1974 (P.L. 93-579) requires that you be given certain information in connection with your submission of the attached form related to a patent application or patent. Accordingly, pursuant to the requirements of the Act, please be advised that: (1) the general authority for the collection of this information is 35 U.S.C. 2(b)(2); (2) furnishing of the information solicited is voluntary; and (3) the principal purpose for which the information is used by the U.S. Patent and Trademark Office is to process and/or examine your submission related to a patent application or patent. If you do not furnish the requested information, the U.S. Patent and Trademark Office may not be able to process and/or examine your submission, which may result in termination of proceedings or abandonment of the application or expiration of the patent.

The information provided by you in this form will be subject to the following routine uses:

1. The information on this form will be treated confidentially to the extent allowed under the Freedom of Information Act (5 U.S.C. 552) and the Privacy Act (5 U.S.C. 552a). Records from this system of records may be disclosed to the Department of Justice to determine whether the Freedom of Information Act requires disclosure of these record s.

2. A record from this system of records may be disclosed, as a routine use, in the course of presenting evidence to a court, magistrate, or administrative tribunal, including disclosures to opposing counsel in the course of settlement negotiations.

3. A record in this system of records may be disclosed, as a routine use, to a Member of Congress submitting a request involving an individual, to whom the record pertains, when the individual has requested assistance from the Member with respect to the subject matter of the record.

4. A record in this system of records may be disclosed, as a routine use, to a contractor of the Agency having need for the information in order to perform a contract. Recipients of information shall be required to comply with the requirements of the Privacy Act of 1974, as amended, pursuant to 5 U.S.C. 552a(m).

5. A record related to an International Application filed under the Patent Cooperation Treaty in this system of records may be disclosed, as a routine use, to the International Bureau of the World Intellectual Property Organization, pursuant to the Patent Cooperation Treaty.

6. A record in this system of records may be disclosed, as a routine use, to another federal agency for purposes of National Security review (35 U.S.C. 181) and for review pursuant to the Atomic Energy Act (42 U.S.C. 218(c)).

7. A record from this system of records may be disclosed, as a routine use, to the Administrator, General Services, or his/her designee, during an inspection of records conducted by GSA as part of that agency's responsibility to recommend improvements in records management practices and programs, under authority of 44 U.S.C. 2904 and 2906. Such disclosure shall be made in accordance with the GSA regulations governing inspection of records for this purpose, and any other relevant (i.e., GSA or Commerce) directive. Such disclosure shall not be used to make determinations about individuals.

8. A record from this system of records may be disclosed, as a routine use, to the public after either publication of the application pursuant to 35 U.S.C. 122(b) or issuance of a patent pursuant to 35 U.S.C. 151. Further, a record may be disclosed, subject to the limitations of 37 CFR 1.14, as a routine use, to the public if the record was filed in an application which became abandoned or in which the proceedings were terminated and which application is referenced by either a published application, an application open to public inspections or an issued patent.

9. A record from this system of records may be disclosed, as a routine use, to a Federal, State, or local law enforcement agency, if the USPTO becomes aware of a violation or potential violation of law or regulation.

Index of Claims	Application/Control No.	Applicant(s)/Patent Under Reexamination
	13310755	GOERTZ, MAGNUS
	Examiner	Art Unit
	RYAN PITARO	2171

✓	Rejected	-	Cancelled	N	Non-Elected	A	Appeal
=	Allowed	÷	Restricted	I	Interference	O	Objected

☐ Claims renumbered in the same order as presented by applicant ☐ CPA ☐ T.D. ☐ R.1.47

CLAIM		DATE								
Final	Original	05/03/2012	09/17/2012	02/25/2013	07/23/2013	12/02/2013				
	1	-	-	-	-	-				
	2	-	-	-	-	-				
	3	-	-	-	-	-				
	4	-	-	-	-	-				
	5	-	-	-	-	-				
	6	-	-	-	-	-				
	7	-	-	-	-	-				
	8	-	-	-	-	-				
	9	-	-	-	-	-				
	10	-	-	-	-	-				
	11	-	-	-	-	-				
	12	-	-	-	-	-				
	13	-	-	-	-	-				
	14	-	-	-	-	-				
	15	-	-	-	-	-				
	16	-	-	-	-	-				
	17	-	-	-	-	-				
	18	-	-	-	-	-				
	19	✓	N	N	N	N				
	20	✓	N	N	N	N				
	21	✓	✓	✓	✓	✓				
	22	✓	-	-	-	-				
	23	✓	-	-	-	-				
	24	✓	-	-	-	-				
	25	✓	-	-	-	-				
	26	✓	-	-	-	-				
	27	✓	-	-	-	-				
	28	✓	N	N	N	N				
	29	✓	N	N	N	N				
	30	✓	N	N	N	N				
	31	✓	N	N	N	N				
	32	✓	N	N	N	N				
	33	✓	N	N	N	N				
	34	✓	N	N	N	N				
	35	✓	N	N	N	N				
	36	✓	N	N	N	N				

Index of Claims	Application/Control No.	Applicant(s)/Patent Under Reexamination
	13310755	GOERTZ, MAGNUS
	Examiner	**Art Unit**
	RYAN PITARO	2171

✓	Rejected	-	Cancelled	N	Non-Elected	A	Appeal
=	Allowed	÷	Restricted	I	Interference	O	Objected

☐ Claims renumbered in the same order as presented by applicant ☐ CPA ☐ T.D. ☐ R.1.47

CLAIM		DATE								
Final	Original	05/03/2012	09/17/2012	02/25/2013	07/23/2013	12/02/2013				
	37		✓	✓	✓	✓				
	38		✓	-	-	-				
	39		✓	✓	✓	✓				
	40		✓	✓	✓	✓				
	41		✓	✓	✓	✓				
	42		✓	✓	✓	✓				
	43				✓	✓				
	44				✓	✓				
	45				✓	✓				
	46					✓				
	47					✓				

Search Notes	Application/Control No.	Applicant(s)/Patent Under Reexamination
	13310755	GOERTZ, MAGNUS
	Examiner	Art Unit
	RYAN PITARO	2171

CPC- SEARCHED		
Symbol	Date	Examiner

CPC COMBINATION SETS - SEARCHED		
Symbol	Date	Examiner

US CLASSIFICATION SEARCHED			
Class	Subclass	Date	Examiner

SEARCH NOTES		
Search Notes	Date	Examiner
EAST	5/3/2012	RFP
Internet	5/3/2012	RFP
Inventor Name	5/3/2012	RFP
IEEE	5/3/2012	RFP
Update Search	9/17/2012	RFP
Update Search	2/22/2013	RFP
Update Search	7/23/2013	RFP
Update Search	12/1/2013	RFP

INTERFERENCE SEARCH			
US Class/ CPC Symbol	US Subclass / CPC Group	Date	Examiner

UNITED STATES PATENT AND TRADEMARK OFFICE

UNITED STATES DEPARTMENT OF COMMERCE
United States Patent and Trademark Office
Address: COMMISSIONER FOR PATENTS
P.O. Box 1450
Alexandria, Virginia 22313-1450
www.uspto.gov

APPLICATION NO.	FILING DATE	FIRST NAMED INVENTOR	ATTORNEY DOCKET NO.	CONFIRMATION NO.
13/310,755	12/04/2011	Magnus Goertz	NEONODE.P039	1066

75660 7590 10/31/2013

Soquel Group, LLC
P.O. Box 691
Soquel, CA 95073

EXAMINER	
PITARO, RYAN F	
ART UNIT	PAPER NUMBER
2171	

NOTIFICATION DATE	DELIVERY MODE
10/31/2013	ELECTRONIC

Please find below and/or attached an Office communication concerning this application or proceeding.

The time period for reply, if any, is set in the attached communication.

Notice of the Office communication was sent electronically on above-indicated "Notification Date" to the following e-mail address(es):

pto@soquelgroup.com
rblumberg@soquelgroup.com
mberger@soquelgroup.com

Examiner-Initiated Interview Summary	Application No.	Applicant(s)	
	13/310,755	GOERTZ, MAGNUS	
	Examiner	Art Unit	
	RYAN PITARO	2171	

All participants (applicant, applicant's representative, PTO personnel):

(1) *Ryan Pitaro*. (3)_____.

(2) *Marc Berger*. (4)_____.

Date of Interview: *28 October 2013*.

Type: ☒ Telephonic ☐ Video Conference
☐ Personal [copy given to: ☐ applicant ☐ applicant's representative]

Exhibit shown or demonstration conducted: ☐ Yes ☐ No.
If Yes, brief description: _____.

Issues Discussed ☐101 ☐112 ☐102 ☐103 ☐Others
(For each of the checked box(es) above, please describe below the issue and detailed description of the discussion)

Claim(s) discussed: _____.

Identification of prior art discussed: _____.

Substance of Interview
(For each issue discussed, provide a detailed description and indicate if agreement was reached. Some topics may include: identification or clarification of a reference or a portion thereof, claim interpretation, proposed amendments, arguments of any applied references etc...)

Applicants' request for entry into AFCP 2.0 is acknowledged, but it is respectfully submitted that the amendment filed on October 25, 2013 will not be entered as the newly added features require further search and/or consideration.

Further, the Examiner notes that the new features require further search and/or consideration beyond the terms of AFCP 2.0. While it is respectfully noted that Compact Prosecution is the top goal of the Patent Office and the After Final Consideration Pilot program, the examiner makes every effort to achieve the goals of the program. However, it is respectfully noted that each of independent claims which would require further search and/or consideration beyond the alloted time period given under the AFCP 2.0.

Applicants representative is, as always, welcome to contact the Examiner and discuss the substance of the case upon maintenance/satisfaction of pendency requirements for the case..

Applicant recordation instructions: It is not necessary for applicant to provide a separate record of the substance of interview.

Examiner recordation instructions: Examiners must summarize the substance of any interview of record. A complete and proper recordation of the substance of an interview should include the items listed in MPEP 713.04 for complete and proper recordation including the identification of the general thrust of each argument or issue discussed, a general indication of any other pertinent matters discussed regarding patentability and the general results or outcome of the interview, to include an indication as to whether or not agreement was reached on the issues raised.

☐ Attachment

/Ryan F Pitaro/ Primary Examiner, Art Unit 2171	

Advisory Action Before the Filing of an Appeal Brief	**Application No.** 13/310,755	**Applicant(s)** GOERTZ, MAGNUS	
	Examiner RYAN PITARO	**Art Unit** 2171	**AIA (First Inventor to File) Status** No

--The MAILING DATE of this communication appears on the cover sheet with the correspondence address --

THE REPLY FILED 25 October 2013 FAILS TO PLACE THIS APPLICATION IN CONDITION FOR ALLOWANCE.

NO NOTICE OF APPEAL FILED

1. ☐ The reply was filed after a final rejection. No Notice of Appeal has been filed. To avoid abandonment of this application, applicant must timely file one of the following replies: (1) an amendment, affidavit, or other evidence, which places the application in condition for allowance; (2) a Notice of Appeal (with appeal fee) in compliance with 37 CFR 41.31; or (3) a Request for Continued Examination (RCE) in compliance with 37 CFR 1.114 if this is a utility or plant application. Note that RCEs are not permitted in design applications. The reply must be filed within one of the following time periods:
   a) ☐ The period for reply expires _____months from the mailing date of the final rejection.
   b) ☒ The period for reply expires on: (1) the mailing date of this Advisory Action; or (2) the date set forth in the final rejection, whichever is later. In no event, however, will the statutory period for reply expire later than SIX MONTHS from the mailing date of the final rejection.
   c) ☐ A prior Advisory Action was mailed more than 3 months after the mailing date of the final rejection in response to a first after-final reply filed within 2 months of the mailing date of the final rejection. The current period for reply expires months from the mailing date of *the prior Advisory Action* or SIX MONTHS from the mailing date of the final rejection, whichever is earlier.

   Examiner Note: If box 1 is checked, check either box (a), (b) or (c). ONLY CHECK BOX (b) WHEN THIS ADVISORY ACTION IS THE FIRST RESPONSE TO APPLICANT'S FIRST AFTER-FINAL REPLY WHICH WAS FILED WITHIN TWO MONTHS OF THE FINAL REJECTION. ONLY CHECK BOX (c) IN THE LIMITED SITUATION SET FORTH UNDER BOX (c). See MPEP 706.07(f).

Extensions of time may be obtained under 37 CFR 1.136(a). The date on which the petition under 37 CFR 1.136(a) and the appropriate extension fee have been filed is the date for purposes of determining the period of extension and the corresponding amount of the fee. The appropriate extension fee under 37 CFR 1.17(a) is calculated from: (1) the expiration date of the shortened statutory period for reply originally set in the final Office action; or (2) as set forth in (b) or (c) above, if checked. Any reply received by the Office later than three months after the mailing date of the final rejection, even if timely filed, may reduce any earned patent term adjustment. See 37 CFR 1.704(b).

NOTICE OF APPEAL

2. ☐ The Notice of Appeal was filed on _____. A brief in compliance with 37 CFR 41.37 must be filed within two months of the date of filing the Notice of Appeal (37 CFR 41.37(a)), or any extension thereof (37 CFR 41.37(e)), to avoid dismissal of the appeal. Since a Notice of Appeal has been filed, any reply must be filed within the time period set forth in 37 CFR 41.37(a).

AMENDMENTS

3. ☒ The proposed amendments filed after a final rejection, but prior to the date of filing a brief, will not be entered because
   a) ☒ They raise new issues that would require further consideration and/or search (see NOTE below);
   b) ☐ They raise the issue of new matter (see NOTE below);
   c) ☐ They are not deemed to place the application in better form for appeal by materially reducing or simplifying the issues for appeal; and/or
   d) ☐ They present additional claims without canceling a corresponding number of finally rejected claims.

   NOTE: *See Continuation Sheet*. (See 37 CFR 1.116 and 41.33(a)).
4. ☐ The amendments are not in compliance with 37 CFR 1.121. See attached Notice of Non-Compliant Amendment (PTOL-324).
5. ☐ Applicant's reply has overcome the following rejection(s): _____.
6. ☐ Newly proposed or amended claim(s) _____ would be allowable if submitted in a separate, timely filed amendment canceling the non-allowable claim(s).
7. ☒ For purposes of appeal, the proposed amendment(s): (a) ☒ will not be entered, or (b) ☐ will be entered, and an explanation of how the new or amended claims would be rejected is provided below or appended.

AFFIDAVIT OR OTHER EVIDENCE

8. ☐ A declaration(s)/affidavit(s) under **37 CFR 1.130(b)** was/were filed on _____.
9. ☐ The affidavit or other evidence filed after final action, but before or on the date of filing a Notice of Appeal will not be entered because applicant failed to provide a showing of good and sufficient reasons why the affidavit or other evidence is necessary and was not earlier presented. See 37 CFR 1.116(e).
10. ☐ The affidavit or other evidence filed after the date of filing the Notice of Appeal, but prior to the date of filing a brief, will not be entered because the affidavit or other evidence failed to overcome all rejections under appeal and/or appellant fails to provide a showing of good and sufficient reasons why it is necessary and was not earlier presented. See 37 CFR 41.33(d)(1).
11. ☐ The affidavit or other evidence is entered. An explanation of the status of the claims after entry is below or attached.

REQUEST FOR RECONSIDERATION/OTHER

12. ☐ The request for reconsideration has been considered but does NOT place the application in condition for allowance because: _____.
13. ☐ Note the attached Information *Disclosure Statement*(s). (PTO/SB/08) Paper No(s). _____
14. ☐ Other: _____.

STATUS OF CLAIMS

15. The status of the claim(s) is (or will be) as follows:
    Claim(s) allowed: .
    Claim(s) objected to: .
    Claim(s) rejected: .
    Claim(s) withdrawn from consideration: .

Continuation of 3. NOTE: Applicants' request for entry into AFCP 2.0 is acknowledged, but it is respectfully submitted that the amendment filed on October 25, 2013 will not be entered as the newly added features require further search and/or consideration.

Further, the Examiner notes that the new features require further search and/or consideration beyond the terms of AFCP 2.0. While it is respectfully noted that Compact Prosecution is the top goal of the Patent Office and the After Final Consideration Pilot program, the examiner makes every effort to achieve the goals of the program. However, it is respectfully noted that each of independent claims which would require further search and/or consideration beyond the alloted time period given under the AFCP 2.0.

Applicants representative is, as always, welcome to contact the Examiner and discuss the substance of the case upon maintenance/satisfaction of pendency requirements for the case..

Examiner-Initiated Interview Summary	Application No.	Applicant(s)	
	13/310,755	GOERTZ, MAGNUS	
	Examiner	Art Unit	
	RYAN PITARO	2171	

All participants (applicant, applicant's representative, PTO personnel):

(1) *Ryan Pitaro*. (3)_____.

(2) *Marc Berger*. (4)_____.

Date of Interview: *28 October 2013*.

Type: ☒ Telephonic ☐ Video Conference
☐ Personal [copy given to: ☐ applicant ☐ applicant's representative]

Exhibit shown or demonstration conducted: ☐ Yes ☐ No.
If Yes, brief description: _____.

Issues Discussed ☐101 ☐112 ☐102 ☐103 ☐Others
(For each of the checked box(es) above, please describe below the issue and detailed description of the discussion)

Claim(s) discussed: _____.

Identification of prior art discussed: _____.

Substance of Interview
(For each issue discussed, provide a detailed description and indicate if agreement was reached. Some topics may include: identification or clarification of a reference or a portion thereof, claim interpretation, proposed amendments, arguments of any applied references etc...)

Applicants' request for entry into AFCP 2.0 is acknowledged, but it is respectfully submitted that the amendment filed on October 25, 2013 will not be entered as the newly added features require further search and/or consideration.

Further, the Examiner notes that the new features require further search and/or consideration beyond the terms of AFCP 2.0. While it is respectfully noted that Compact Prosecution is the top goal of the Patent Office and the After Final Consideration Pilot program, the examiner makes every effort to achieve the goals of the program. However, it is respectfully noted that each of independent claims which would require further search and/or consideration beyond the alloted time period given under the AFCP 2.0.

Applicants representative is, as always, welcome to contact the Examiner and discuss the substance of the case upon maintenance/satisfaction of pendency requirements for the case..

Applicant recordation instructions: It is not necessary for applicant to provide a separate record of the substance of interview.

Examiner recordation instructions: Examiners must summarize the substance of any interview of record. A complete and proper recordation of the substance of an interview should include the items listed in MPEP 713.04 for complete and proper recordation including the identification of the general thrust of each argument or issue discussed, a general indication of any other pertinent matters discussed regarding patentability and the general results or outcome of the interview, to include an indication as to whether or not agreement was reached on the issues raised.

☐ Attachment

/Ryan F Pitaro/ Primary Examiner, Art Unit 2171	

Attorney's Docket No.: NEONODE.P039 *PATENT*

IN THE UNITED STATES PATENT AND TRADEMARK OFFICE

In Re Patent Application of:	)	
	)	Examiner: Ryan F. Pitaro
Magnus Goertz	)	
	)	Art Unit: 2171
Application No: 13/310,755	)	
	)	
Filed: December 4, 2011	)	
	)	
For: USER INTERFACE	)	
	)	DO NOT ENTER: /R.P./

Mail Stop AMENDMENT
Commissioner for Patents
P. O. Box 1450
Alexandria, VA 22313-1450

10/28/2013

AMENDMENT AND RESPONSE TO OFFICE ACTION

UNDER 37 C.F.R. §1.116

In response to the outstanding Final Office action dated July 29, 2013 (the "Office Action") and pursuant to 37 C.F.R. §1.116, applicants respectfully request that the above-identified application be amended as follows. A Request For Consideration Under The After Final Consideration Pilot Program 2.0 is being filed herewith.

Doc code: RCEX
Doc description: Request for Continued Examination (RCE)

PTO/SB/30EFS (07-09)
Approved for use through 07/31/2012. OMB 0651-0031
U.S. Patent and Trademark Office; U.S. DEPARTMENT OF COMMERCE
Under the Paperwork Reduction Act of 1995, no persons are required to respond to a collection of information unless it contains a valid OMB control number.

REQUEST FOR CONTINUED EXAMINATION(RCE)TRANSMITTAL
(Submitted Only via EFS-Web)

Application Number	13310755	Filing Date	2011-12-04	Docket Number (if applicable)	NEONODE.P039	Art Unit	2171
First Named Inventor	Magnus Goertz			Examiner Name	Ryan F. Pitaro		

This is a Request for Continued Examination (RCE) under 37 CFR 1.114 of the above-identified application.
Request for Continued Examination (RCE) practice under 37 CFR 1.114 does not apply to any utility or plant application filed prior to June 8, 1995, or to any design application. The Instruction Sheet for this form is located at WWW.USPTO.GOV

SUBMISSION REQUIRED UNDER 37 CFR 1.114

Note: If the RCE is proper, any previously filed unentered amendments and amendments enclosed with the RCE will be entered in the order in which they were filed unless applicant instructs otherwise. If applicant does not wish to have any previously filed unentered amendment(s) entered, applicant must request non-entry of such amendment(s).

☒ Previously submitted. If a final Office action is outstanding, any amendments filed after the final Office action may be considered as a submission even if this box is not checked.

☐ Consider the arguments in the Appeal Brief or Reply Brief previously filed on _____

☐ Other _____

☐ Enclosed

☐ Amendment/Reply

☐ Information Disclosure Statement (IDS)

☐ Affidavit(s)/ Declaration(s)

☐ Other _____

MISCELLANEOUS

☐ Suspension of action on the above-identified application is requested under 37 CFR 1.103(c) for a period of months _____
(Period of suspension shall not exceed 3 months; Fee under 37 CFR 1.17(i) required)

☐ Other _____

FEES

☐ **The RCE fee under 37 CFR 1.17(e) is required by 37 CFR 1.114 when the RCE is filed.**
The Director is hereby authorized to charge any underpayment of fees, or credit any overpayments, to Deposit Account No _____

SIGNATURE OF APPLICANT, ATTORNEY, OR AGENT REQUIRED

☒ Patent Practitioner Signature

☐ Applicant Signature

PTO/SB/30EFS (07-09)
Approved for use through 07/31/2012. OMB 0651-0031
U.S. Patent and Trademark Office; U.S. DEPARTMENT OF COMMERCE
Under the Paperwork Reduction Act of 1995, no persons are required to respond to a collection of information unless it contains a valid OMB control number.

Signature of Registered U.S. Patent Practitioner			
Signature	/Marc A. Berger/	Date (YYYY-MM-DD)	2013-10-29
Name	Marc A. Berger	Registration Number	44029

This collection of information is required by 37 CFR 1.114. The information is required to obtain or retain a benefit by the public which is to file (and by the USPTO to process) an application. Confidentiality is governed by 35 U.S.C. 122 and 37 CFR 1.11 and 1.14. This collection is estimated to take 12 minutes to complete, including gathering, preparing, and submitting the completed application form to the USPTO. Time will vary depending upon the individual case. Any comments on the amount of time you require to complete this form and/or suggestions for reducing this burden, should be sent to the Chief Information Officer, U.S. Patent and Trademark Office, U.S. Department of Commerce, P.O. Box 1450, Alexandria, VA 22313-1450.

If you need assistance in completing the form, call 1-800-PTO-9199 and select option 2.

Privacy Act Statement

The Privacy Act of 1974 (P.L. 93-579) requires that you be given certain information in connection with your submission of the attached form related to a patent application or patent. Accordingly, pursuant to the requirements of the Act, please be advised that: (1) the general authority for the collection of this information is 35 U.S.C. 2(b)(2); (2) furnishing of the information solicited is voluntary; and (3) the principal purpose for which the information is used by the U.S. Patent and Trademark Office is to process and/or examine your submission related to a patent application or patent. If you do not furnish the requested information, the U.S. Patent and Trademark Office may not be able to process and/or examine your submission, which may result in termination of proceedings or abandonment of the application or expiration of the patent.

The information provided by you in this form will be subject to the following routine uses:

1. The information on this form will be treated confidentially to the extent allowed under the Freedom of Information Act (5 U.S.C. 552) and the Privacy Act (5 U.S.C. 552a). Records from this system of records may be disclosed to the Department of Justice to determine whether the Freedom of Information Act requires disclosure of these records.

2. A record from this system of records may be disclosed, as a routine use, in the course of presenting evidence to a court, magistrate, or administrative tribunal, including disclosures to opposing counsel in the course of settlement negotiations.

3. A record in this system of records may be disclosed, as a routine use, to a Member of Congress submitting a request involving an individual, to whom the record pertains, when the individual has requested assistance from the Member with respect to the subject matter of the record.

4. A record in this system of records may be disclosed, as a routine use, to a contractor of the Agency having need for the information in order to perform a contract. Recipients of information shall be required to comply with the requirements of the Privacy Act of 1974, as amended, pursuant to 5 U.S.C. 552a(m).

5. A record related to an International Application filed under the Patent Cooperation Treaty in this system of records may be disclosed, as a routine use, to the International Bureau of the World Intellectual Property Organization, pursuant to the Patent Cooperation Treaty.

6. A record in this system of records may be disclosed, as a routine use, to another federal agency for purposes of National Security review (35 U.S.C. 181) and for review pursuant to the Atomic Energy Act (42 U.S.C. 218(c)).

7. A record from this system of records may be disclosed, as a routine use, to the Administrator, General Services, or his/her designee, during an inspection of records conducted by GSA as part of that agency's responsibility to recommend improvements in records management practices and programs, under authority of 44 U.S.C. 2904 and 2906. Such disclosure shall be made in accordance with the GSA regulations governing inspection of records for this purpose, and any other relevant (i.e., GSA or Commerce) directive. Such disclosure shall not be used to make determinations about individuals.

8. A record from this system of records may be disclosed, as a routine use, to the public after either publication of the application pursuant to 35 U.S.C. 122(b) or issuance of a patent pursuant to 35 U.S.C. 151. Further, a record may be disclosed, subject to the limitations of 37 CFR 1.14, as a routine use, to the public if the record was filed in an application which became abandoned or in which the proceedings were terminated and which application is referenced by either a published application, an application open to public inspections or an issued patent.

9. A record from this system of records may be disclosed, as a routine use, to a Federal, State, or local law enforcement agency, if the USPTO becomes aware of a violation or potential violation of law or regulation.

Electronic Patent Application Fee Transmittal	
Application Number:	13310755
Filing Date:	04-Dec-2011
Title of Invention:	USER INTERFACE
First Named Inventor/Applicant Name:	Magnus Goertz
Filer:	Marc Aron Berger
Attorney Docket Number:	NEONODE.P039
Filed as Large Entity	

Utility under 35 USC 111(a) Filing Fees

Description	Fee Code	Quantity	Amount	Sub-Total in USD($)
Basic Filing:				
Pages:				
Claims:				
Miscellaneous-Filing:				
Petition:				
Patent-Appeals-and-Interference:				
Post-Allowance-and-Post-Issuance:				
Extension-of-Time:				

Description	Fee Code	Quantity	Amount	Sub-Total in USD($)
Miscellaneous:				
RCE - 2nd and Subsequent Request	1820	1	1700	1700
		Total in USD ($)		**1700**

Electronic Acknowledgement Receipt	
EFS ID:	17255983
Application Number:	13310755
International Application Number:	
Confirmation Number:	1066
Title of Invention:	USER INTERFACE
First Named Inventor/Applicant Name:	Magnus Goertz
Customer Number:	75660
Filer:	Marc Aron Berger
Filer Authorized By:	
Attorney Docket Number:	NEONODE.P039
Receipt Date:	29-OCT-2013
Filing Date:	04-DEC-2011
Time Stamp:	15:09:23
Application Type:	Utility under 35 USC 111(a)

Payment information:

Submitted with Payment	yes
Payment Type	Credit Card
Payment was successfully received in RAM	$1700
RAM confirmation Number	1866
Deposit Account	
Authorized User	

File Listing:

Document Number	Document Description	File Name	File Size(Bytes)/ Message Digest	Multi Part /.zip	Pages (if appl.)

1	Request for Continued Examination (RCE)	NEONODE-P039_RequestForContinuedExamination_29OCT2013.pdf	697568 538a3c85a91ef68c8a4796070b854c714b47af04	no	3
Warnings:					
Information:					
2	Fee Worksheet (SB06)	fee-info.pdf	29987 01c37ce8a3c0c0b4953e2f6e5e56753bd72cfe65	no	2
Warnings:					
Information:					
		Total Files Size (in bytes):	727555		

This Acknowledgement Receipt evidences receipt on the noted date by the USPTO of the indicated documents, characterized by the applicant, and including page counts, where applicable. It serves as evidence of receipt similar to a Post Card, as described in MPEP 503.

<u>New Applications Under 35 U.S.C. 111</u>
If a new application is being filed and the application includes the necessary components for a filing date (see 37 CFR 1.53(b)-(d) and MPEP 506), a Filing Receipt (37 CFR 1.54) will be issued in due course and the date shown on this Acknowledgement Receipt will establish the filing date of the application.

<u>National Stage of an International Application under 35 U.S.C. 371</u>
If a timely submission to enter the national stage of an international application is compliant with the conditions of 35 U.S.C. 371 and other applicable requirements a Form PCT/DO/EO/903 indicating acceptance of the application as a national stage submission under 35 U.S.C. 371 will be issued in addition to the Filing Receipt, in due course.

<u>New International Application Filed with the USPTO as a Receiving Office</u>
If a new international application is being filed and the international application includes the necessary components for an international filing date (see PCT Article 11 and MPEP 1810), a Notification of the International Application Number and of the International Filing Date (Form PCT/RO/105) will be issued in due course, subject to prescriptions concerning national security, and the date shown on this Acknowledgement Receipt will establish the international filing date of the application.

UNITED STATES PATENT AND TRADEMARK OFFICE

UNITED STATES DEPARTMENT OF COMMERCE
United States Patent and Trademark Office
Address: COMMISSIONER FOR PATENTS
P.O. Box 1450
Alexandria, Virginia 22313-1450
www.uspto.gov

APPLICATION NO.	FILING DATE	FIRST NAMED INVENTOR	ATTORNEY DOCKET NO.	CONFIRMATION NO.
13/310,755	12/04/2011	Magnus Goertz	NEONODE.P039	1066

75660 7590 10/25/2013

Soquel Group, LLC
P.O. Box 691
Soquel, CA 95073

EXAMINER	
PITARO, RYAN F	
ART UNIT	PAPER NUMBER
2171	

NOTIFICATION DATE	DELIVERY MODE
10/25/2013	ELECTRONIC

Please find below and/or attached an Office communication concerning this application or proceeding.

The time period for reply, if any, is set in the attached communication.

Notice of the Office communication was sent electronically on above-indicated "Notification Date" to the following e-mail address(es):

pto@soquelgroup.com
rblumberg@soquelgroup.com
mberger@soquelgroup.com

Applicant-Initiated Interview Summary	**Application No.** 13/310,755	**Applicant(s)** GOERTZ, MAGNUS	
	Examiner RYAN PITARO	**Art Unit** 2171	

All participants (applicant, applicant's representative, PTO personnel):

(1) *RYAN PITARO*. (3)_____.

(2) *Joseph Shain*. (4)_____.

Date of Interview: *08 October 2013*.

Type: ☐ Telephonic ☐ Video Conference
☒ Personal [copy given to: ☒ applicant ☐ applicant's representative]

Exhibit shown or demonstration conducted: ☐ Yes ☐ No.
If Yes, brief description: _____.

Issues Discussed ☐101 ☐112 ☐102 ☐103 ☐Others
(For each of the checked box(es) above, please describe below the issue and detailed description of the discussion)

Claim(s) discussed: _____.

Identification of prior art discussed: _____.

Substance of Interview
(For each issue discussed, provide a detailed description and indicate if agreement was reached. Some topics may include: identification or clarification of a reference or a portion thereof, claim interpretation, proposed amendments, arguments of any applied references etc...)

Discussed possible amendments to the claims in order to advance prosecution. No agreement was reached. .

Applicant recordation instructions: The formal written reply to the last Office action must include the substance of the interview. (See MPEP section 713.04). If a reply to the last Office action has already been filed, applicant is given a non-extendable period of the longer of one month or thirty days from this interview date, or the mailing date of this interview summary form, whichever is later, to file a statement of the substance of the interview

Examiner recordation instructions: Examiners must summarize the substance of any interview of record. A complete and proper recordation of the substance of an interview should include the items listed in MPEP 713.04 for complete and proper recordation including the identification of the general thrust of each argument or issue discussed, a general indication of any other pertinent matters discussed regarding patentability and the general results or outcome of the interview, to include an indication as to whether or not agreement was reached on the issues raised.

☐ Attachment

/Ryan F Pitaro/ Primary Examiner, Art Unit 2171	

Summary of Record of Interview Requirements

Manual of Patent Examining Procedure (MPEP), Section 713.04, Substance of Interview Must be Made of Record
A complete written statement as to the substance of any face-to-face, video conference, or telephone interview with regard to an application must be made of record in the application whether or not an agreement with the examiner was reached at the interview.

Title 37 Code of Federal Regulations (CFR) § 1.133 Interviews
Paragraph (b)

In every instance where reconsideration is requested in view of an interview with an examiner, a complete written statement of the reasons presented at the interview as warranting favorable action must be filed by the applicant. An interview does not remove the necessity for reply to Office action as specified in §§ 1.111, 1.135. (35 U.S.C. 132)

37 CFR §1.2 Business to be transacted in writing.
All business with the Patent or Trademark Office should be transacted in writing. The personal attendance of applicants or their attorneys or agents at the Patent and Trademark Office is unnecessary. The action of the Patent and Trademark Office will be based exclusively on the written record in the Office. No attention will be paid to any alleged oral promise, stipulation, or understanding in relation to which there is disagreement or doubt.

———

The action of the Patent and Trademark Office cannot be based exclusively on the written record in the Office if that record is itself incomplete through the failure to record the substance of interviews.

It is the responsibility of the applicant or the attorney or agent to make the substance of an interview of record in the application file, unless the examiner indicates he or she will do so. It is the examiner's responsibility to see that such a record is made and to correct material inaccuracies which bear directly on the question of patentability.

Examiners must complete an Interview Summary Form for each interview held where a matter of substance has been discussed during the interview by checking the appropriate boxes and filling in the blanks. Discussions regarding only procedural matters, directed solely to restriction requirements for which interview recordation is otherwise provided for in Section 812.01 of the Manual of Patent Examining Procedure, or pointing out typographical errors or unreadable script in Office actions or the like, are excluded from the interview recordation procedures below. Where the substance of an interview is completely recorded in an Examiners Amendment, no separate Interview Summary Record is required.

The Interview Summary Form shall be given an appropriate Paper No., placed in the right hand portion of the file, and listed on the "Contents" section of the file wrapper. In a personal interview, a duplicate of the Form is given to the applicant (or attorney or agent) at the conclusion of the interview. In the case of a telephone or video-conference interview, the copy is mailed to the applicant's correspondence address either with or prior to the next official communication. If additional correspondence from the examiner is not likely before an allowance or if other circumstances dictate, the Form should be mailed promptly after the interview rather than with the next official communication.

The Form provides for recordation of the following information:
- Application Number (Series Code and Serial Number)
- Name of applicant
- Name of examiner
- Date of interview
- Type of interview (telephonic, video-conference, or personal)
- Name of participant(s) (applicant, attorney or agent, examiner, other PTO personnel, etc.)
- An indication whether or not an exhibit was shown or a demonstration conducted
- An identification of the specific prior art discussed
- An indication whether an agreement was reached and if so, a description of the general nature of the agreement (may be by attachment of a copy of amendments or claims agreed as being allowable). Note: Agreement as to allowability is tentative and does not restrict further action by the examiner to the contrary.
- The signature of the examiner who conducted the interview (if Form is not an attachment to a signed Office action)

It is desirable that the examiner orally remind the applicant of his or her obligation to record the substance of the interview of each case. It should be noted, however, that the Interview Summary Form will not normally be considered a complete and proper recordation of the interview unless it includes, or is supplemented by the applicant or the examiner to include, all of the applicable items required below concerning the substance of the interview.

A complete and proper recordation of the substance of any interview should include at least the following applicable items:
1) A brief description of the nature of any exhibit shown or any demonstration conducted,
2) an identification of the claims discussed,
3) an identification of the specific prior art discussed,
4) an identification of the principal proposed amendments of a substantive nature discussed, unless these are already described on the Interview Summary Form completed by the Examiner,
5) a brief identification of the general thrust of the principal arguments presented to the examiner,
   (The identification of arguments need not be lengthy or elaborate. A verbatim or highly detailed description of the arguments is not required. The identification of the arguments is sufficient if the general nature or thrust of the principal arguments made to the examiner can be understood in the context of the application file. Of course, the applicant may desire to emphasize and fully describe those arguments which he or she feels were or might be persuasive to the examiner.)
6) a general indication of any other pertinent matters discussed, and
7) if appropriate, the general results or outcome of the interview unless already described in the Interview Summary Form completed by the examiner.

Examiners are expected to carefully review the applicant's record of the substance of an interview. If the record is not complete and accurate, the examiner will give the applicant an extendable one month time period to correct the record.

Examiner to Check for Accuracy

If the claims are allowable for other reasons of record, the examiner should send a letter setting forth the examiner's version of the statement attributed to him or her. If the record is complete and accurate, the examiner should place the indication, "Interview Record OK" on the paper recording the substance of the interview along with the date and the examiner's initials.

Attorney's Docket No.: NEONODE.P039 *PATENT*

IN THE UNITED STATES PATENT AND TRADEMARK OFFICE

In Re Patent Application of:	)	
	)	Examiner: Ryan F. Pitaro
Magnus Goertz	)	
	)	Art Unit: 2171
Application No: 13/310,755	)	
	)	
Filed: December 4, 2011	)	
	)	
For: USER INTERFACE	)	
	)	

Mail Stop AMENDMENT
Commissioner for Patents
P. O. Box 1450
Alexandria, VA 22313-1450

AMENDMENT AND RESPONSE TO OFFICE ACTION

UNDER 37 C.F.R. §1.116

In response to the outstanding Final Office action dated July 29, 2013 (the "Office Action") and pursuant to 37 C.F.R. §1.116, applicants respectfully request that the above-identified application be amended as follows. A Request For Consideration Under The After Final Consideration Pilot Program 2.0 is being filed herewith.

IN THE CLAIMS:

Please substitute the following claims for the claims with the same number.

1. – **18.** (canceled)

19. (withdrawn) A non-transitory computer readable medium storing computer program code which, when executed by a mobile handheld device that has a touch sensitive display, instructs the device (i) to display a notification of an incoming phone call, and (ii) to accept the call in response to a multi-step operation comprising an object touching the touch sensitive display, and the object gliding along the touch sensitive display in a specific direction.

20. (withdrawn) The computer readable medium of claim **19**, wherein the program code instructs the device (iii) to disconnect the call in response to a multi-step operation comprising an object touching the touch sensitive area, and the object gliding the object along the touch sensitive display in a direction opposite to the specific direction.

21. (currently amended) A non-transitory computer readable medium storing instructions, which, when executed by a processor of an electronic device having a touch-sensitive ~~surface~~ display screen, cause the processor to enable a user interface of the device, the user interface comprising at least two states, namely, (a) a tap-present state, wherein a plurality of tap-activatable icons for a respective plurality of pre-designated system functions are present, each system function being activated in response to a tap on its respective icon, and (b) a tap-absent state, wherein tap-activatable icons are absent but an otherwise-

activatable graphic is present in a strip along at least one edge of the display screen for transitioning the user interface from the tap-absent state to the tap-present state in response to a multi-step user gesture comprising (i) an object touching the ~~touch-sensitive surface at a location where the otherwise-activatable graphic is provided~~ display screen within the strip, and (ii) the object gliding along the ~~touch-sensitive surface~~ display screen away from the touched location.

22. – **27.** (canceled)

28. (withdrawn) A computer readable medium storing computer program code, which, when executed by a mobile handheld device having a touch sensitive display, instructs the device (i) to display a list of files of a first type, and (ii) to change the list to display files of a second type in response to a tap on the display.

29. (withdrawn) The computer readable medium of claim **28**, wherein the computer program code instructs the device to (iii) display a representation of a file type, and wherein the device changes the list in response to a tap on the representation of the file type.

30. (withdrawn) The computer readable medium of claim **28**, wherein the files of the first type are data files, and the files of the second type are application files.

31. (withdrawn) A computer readable medium storing computer program code, which, when executed by a mobile handheld device that has a touch sensitive display, instructs the device to (i) to display a data input keypad for a user to enter data, and to display a text field for entered data, (ii) to

display representations of a plurality of applications, and (iii) to activate one of the applications and to have the application use the entered data, in response to a tap on its representation.

32. (withdrawn) The computer readable medium of claim **31**, wherein the plurality of applications includes a telephone application that uses the entered data as a telephone number.

33. (withdrawn) The computer readable medium of claim **31**, wherein the plurality of applications includes a text messaging application that uses the entered data as a text message.

34. (withdrawn) The computer readable medium of claim **33**, wherein the text messaging application is a short messaging service (SMS) application.

35. (withdrawn) The computer readable medium of claim **33**, wherein the text messaging application is an e-mail application.

36. (withdrawn) The computer readable medium of claim **31**, wherein the plurality of applications includes a contact list application that stores the entered data as retrievable contact information.

37. (previously presented) The computer readable medium of claim **21**, wherein any state transition elicited by a user gesture that begins at a location at which the otherwise-activatable graphic is provided, transitions to the tap-present state.

38. (canceled)

39. (previously presented) The computer readable medium of claim **21**, wherein the tap-present state does not display the tap-activatable icons within a window frame.

40. (previously presented) The computer readable medium of claim **21**, wherein the plurality of pre-designated system functions comprises a help function.

41. (previously presented) The computer readable medium of claim **21**, wherein the plurality of pre-designated system functions comprises a clock function.

42. (previously presented) The computer readable medium of claim **21**, wherein the plurality of pre-designated system functions comprises an alarm function.

43. (previously presented) The computer readable medium of claim **21**, wherein a description of the multi-step user gesture is publicly available.

44. (previously presented) The computer readable medium of claim **21**, wherein the multi-step user gesture does not require non-public knowledge.

45. (previously presented) The computer readable medium of claim **21**, wherein the multi-step user gesture does not involve a user-specific password or passcode.

Please add the following new claims.

46. (new) The computer readable medium of claim **21**, wherein the strip is less than a thumb's width wide within the display screen.

47. (new) The computer readable medium of claim **21**, wherein the multi-step user gesture comprises (i) the object touching the otherwise-activatable graphic, and (ii) the object gliding along the display screen away from the touched location.

REMARKS

Applicant expresses appreciation to the Examiner for the courtesy of an interview granted to applicant's representative Joseph Shain. The interview was held in person on October 8, 2013. The substance of the interview focused on proposed amendments to claim **21**, and is summarized in the Examiner's Interview Summary mailed on October 25, 2013.

Applicant's representative has carefully studied the outstanding Office Action. The present amendment is intended to place the application in condition for allowance and is believed to overcome all of the rejections made by the Office Action. Favorable reconsideration and allowance of the application are respectfully requested.

Applicant has amended claim **21** without disclaiming the right to pursue the subject matter of this claim prior to amendment. Applicant has added new claims **46** and **47**. No new matter has been introduced, and support for the claim amendments and the new claims is provided below. Claims **21**, **37** and **39** – **47** are presented for examination.

Claim Rejections – 35 U.S.C. §112

On pages 2 and 3, the Office Action has rejected claims **43** – **45** under 35 U.S.C. §112(a) as failing to comply with the written description requirement.

The Office Action has indicated that "*The availability, public knowledge, or involvement of a password/passcode has not been described in such a way …*". The Office Action further indicates that FIG. 2, cited in applicant's response of May 3, 2013, shows a key icon 216 but fails to mention if this key represents a passcode feature. Applicant

respectfully submits that key icon 216 is shown in FIG. 3, whereas applicant had cited FIG. 2, as explained in what follows.

Claims **43** – **45** depend from independent claim **21**, and are directed at a user interface gesture that is provided for transitioning a graphical user interface from a tap-absent state to a tap-present state. Claim **21** is silent with regard to whether the gesture is user-specific or generic. Claims **43** – **45** recite additional features such that only embodiments in which the transition gesture does not require a user-specific password or passcode are included. Applicant respectfully submits that this feature of a generic user interface gesture that is not a user-specific password or passcode, and therefore is publicly available and does not require non-public knowledge, is supported by FIG. 2, which illustrates a single, one-stroke gesture (A) – (B) performed by thumb 4, and by page 2, lines 25 – 28, that describe this gesture.

Claim Rejections – 35 U.S.C. §103

On pages 3 - 6, the Office Action has rejected claims **21**, **37**, **39** and **43** – **45** under 35 U.S.C. §103(a) as being unpatentable over Hansen, US Patent No. 5,821,930 ("Hansen") in view of Hirayama et al., US Patent No. 5,406,307 ("Hirayama").

On pages 6 and 7, the Office Action has rejected claims **40** and **41** under 35 U.S.C. §103(a) as being unpatentable over Hansen in view of Hirayama, and in view of Pogue, Palm Pilot: The Ultimate Guide, 2nd Edition ("Pogue").

On page 7, the Office Action has rejected claim **42** under 35 U.S.C. §103(a) as being unpatentable over Hansen in view of Hirayama, and in view of Carlson, Palm Organizers: Visual Quickstart Guide Palm Organizers ("Carlson").

Brief Discussion of Applied References

The reference of **Hirayama** was discussed in applicant's response filed on May 3, 2013. The reference of **Carlson** was discussed in applicant's response filed on July 3, 2012. The reference of **Pogue** was discussed in applicant's response filed on December 20, 2012.

Hansen teaches an enhancement for conventional graphical user interfaces (GUI) of touch screen computer systems by adding a two-step process to open a working window for certain applications within a conventional windows-based computer system (Hansen/ FIGS. 3A - 3C). Thus, a computer system according to Hansen runs a conventional graphical user interface (GUI) of a touch screen computer system; e.g., windows w1 and w2 commonly displayed by conventional computer systems (Hansen/ col. 5, lines 9 – 13; FIG. 3A). In addition to the conventional GUI, Hansen provides a predetermined area along one side of the screen (Hansen/ col. 6, line 65 – col. 7, line 5; FIG. 4A, step 106), in which a user slides his finger horizontally from the predetermined area to the interior of the screen (Hansen/ col. 7, lines 36 – 49; FIG. 4A, steps 106 – 114) to open a vertical row of function icons (Hansen/ col. 7, lines 47 – 49; FIG. 4A, step 120). A tap on one of the icons (Hansen/ col. 7, lines 50 – 54; FIG. 4A, step 122) opens a working window for the tapped icon's application (Hansen/ col. 7, line 66 – col. 8, line 5; FIG. 4A, steps 124 - 126). To close the working window application, the user slides his finger horizontally from the working window to the predetermined area (Hansen/ col. 10, lines 45 – 48; FIG. 4B).

Response to Claim Rejections – 35 U.S.C. §103

In rejecting claim **21**, the Office Action cites Hansen FIG. 3A as teaching a tap-absent state wherein tap-activatable icons are absent. Applicant respectfully submits that, as illustrated in FIG. 3A, tap-activatable icons are present prior to opening Hansen's vertical row of function icons 50. FIG. 3A in Hansen illustrates windows w1 and w2. In every windows-based GUI, each window includes at least an icon for closing the window. FIG. 1 below illustrates the elements of a standard window.

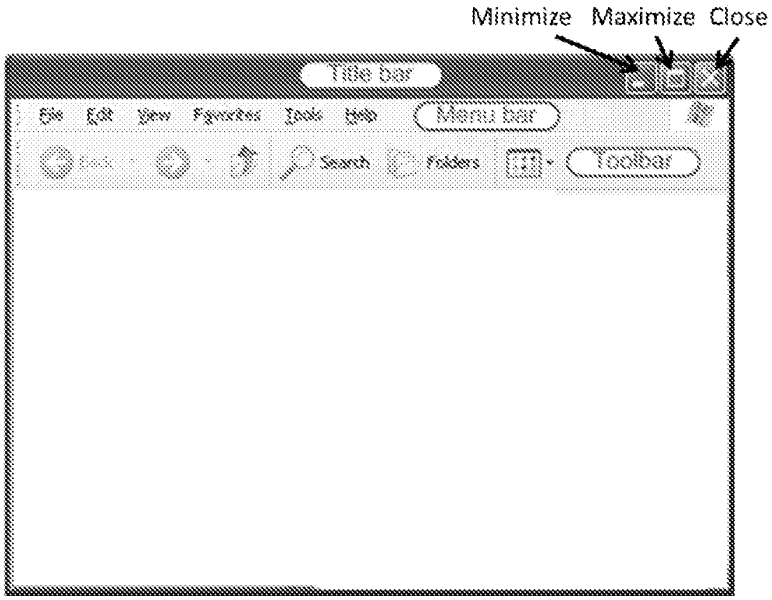

FIG. 1: standard window components

Three tap-activatable icons, to close, maximize and minimize the window, respectively, are located at the right end of the window's title bar shown in FIG. 1. Applicant respectfully submits that <u>at least</u> these icons are present in windows w1 and w2 in Hansen's FIG. 3A. Moreover, applicant respectfully submits that Hansen's computer system, prior to opening windows w1 and w2, provides tap-activatable icons for opening these windows, as is commonplace in prior art computer GUI's:

"FIG. 3A illustrates the video monitor 30 before the user has drawn the first predetermined input stroke to bring forth the working window. The video monitor 30 is showing any of a number of windows w1, w2 as are commonly displayed by a computer system."

Windows w1 and w2 are not Hansen's full-screen working window (Hansen/ FIG. 3C) opened by Hansen's two-step, slide-and-tap process.

Regarding the reference of Pogue, applicant respectfully submits that Pogue's Ronomatic stroke begins in the Graffiti writing area below the screen (Pogue, section 2.1.7) which is not a display. By contrast, the touch-and-glide gesture according to amended claim **21** begins with *"an object **touching the display screen within the strip**"* (emphasis added).

The rejections of the claims under 35 U.S.C. §103 will now be addressed specifically.

Claims 21, 37 and 39 - 47

Independent claim **21** for a computer readable storage medium, as amended, recites the features of

"a tap-absent state, wherein tap-activatable icons are absent but an otherwise-activatable graphic is present in a strip along at least one edge of the display screen for transitioning the user interface from the tap-absent state to the tap-present state in response to a multi-step user gesture comprising (i) an object touching the display screen within the strip, and (ii) the object gliding along the display screen away from the touched location".

As explained above, these features are neither shown nor suggested in Hansen, Hirayama, Pogue or Carlson.

Because claims **37** and **39** – **47** depend from claim **21** and include additional features, applicants respectfully submit that claims **37** and **39** – **47** are not anticipated or rendered obvious by Hansen, Hirayama, Pogue or Carlson, taken alone or in combination.

Accordingly claims **21**, **37** and **39** – **47** are deemed to be allowable.

Support for New and Amended Claims in Original Specification

Independent claim **21** for a computer readable storage medium has been amended to include the feature of an electronic device having a touch-sensitive display screen. This feature is supported in the original specification at least by page 5, lines 5 – 11.

Claim **21** has also been amended to include the feature that the otherwise-activatable graphic is present in a strip along at least one edge of the display screen. This feature is supported in the original specification at least by page 5, lines 5 – 11, and by FIG. 1.

Claim **21** has also been amended to include the feature that the multi-step user gesture includes an object touching the display screen within the strip. This feature is supported in the original specification at least by FIG. 2.

New dependent claim **46** is supported in the original specification at least by FIGS. 8 – 13.

New dependent claim **47** is supported in the original specification at least by page 2, lines 25 – 28 and by page 5, lines 24 - 27.

For the foregoing reasons, applicant respectfully submits that the applicable rejections have been overcome and that the claims are in condition for allowance.

If any matters can be resolved by telephone, applicant requests that the Patent and Trademark Office please contact applicant's representative at the telephone number listed below.

Respectfully submitted,

SOQUEL GROUP LLC

Dated: October 25, 2013

/Marc A. Berger/
Marc A. Berger
Reg. No. 44,029

P.O. Box 691
Soquel, CA 95073
(831) 426-8200
Customer No. 75660

Doc Code: A.NE.AFCP
Document Description: After Final Consideration Pilot Program Request

PTO/SB/434 (05-13)

CERTIFICATION AND REQUEST FOR CONSIDERATION UNDER THE AFTER FINAL CONSIDERATION PILOT PROGRAM 2.0

Practitioner Docket No.:	Application No.:	Filing Date:
NEONODE.P039	13/310,755	December 4, 2011
First Named Inventor:	**Title:**	
Magnus Goertz	USER INTERFACE	

APPLICANT HEREBY CERTIFIES THE FOLLOWING AND REQUESTS CONSIDERATION UNDER THE AFTER FINAL CONSIDERATION PILOT PROGRAM 2.0 (AFCP 2.0) OF THE ACCOMPANYING RESPONSE UNDER 37 CFR 1.116.

1. The above-identified application is (i) an original utility, plant, or design nonprovisional application filed under 35 U.S.C. 111(a) [a continuing application (*e.g.*, a continuation or divisional application) is filed under 35 U.S.C. 111(a) and is eligible under (i)], or (ii) an international application that has entered the national stage in compliance with 35 U.S.C. 371(c).
2. The above-identified application contains an outstanding final rejection.
3. Submitted herewith is a response under 37 CFR 1.116 to the outstanding final rejection. The response includes an amendment to at least one independent claim, and the amendment does not broaden the scope of the independent claim in any aspect.
4. This certification and request for consideration under AFCP 2.0 is the only AFCP 2.0 certification and request filed in response to the outstanding final rejection.
5. Applicant is willing and available to participate in any interview requested by the examiner concerning the present response.
6. This certification and request is being filed electronically using the Office's electronic filing system (EFS-Web).
7. Any fees that would be necessary consistent with current practice concerning responses after final rejection under 37 CFR 1.116, *e.g.*, extension of time fees, are being concurrently filed herewith. [There is no additional fee required to request consideration under AFCP 2.0.]
8. By filing this certification and request, applicant acknowledges the following:
   - Reissue applications and reexamination proceedings are not eligible to participate in AFCP 2.0.
   - The examiner will verify that the AFCP 2.0 submission is compliant, *i.e.*, that the requirements of the program have been met (see items 1 to 7 above). For compliant submissions:
     - The examiner will review the response under 37 CFR 1.116 to determine if additional search and/or consideration (i) is necessitated by the amendment and (ii) could be completed within the time allotted under AFCP 2.0. If additional search and/or consideration is required but cannot be completed within the allotted time, the examiner will process the submission consistent with current practice concerning responses after final rejection under 37 CFR 1.116, *e.g.*, by mailing an advisory action.
     - If the examiner determines that the amendment does not necessitate additional search and/or consideration, or if the examiner determines that additional search and/or consideration is required and could be completed within the allotted time, then the examiner will consider whether the amendment places the application in condition for allowance (after completing the additional search and/or consideration, if required). If the examiner determines that the amendment does not place the application in condition for allowance, then the examiner will contact the applicant and request an interview.
       - The interview will be conducted by the examiner, and if the examiner does not have negotiation authority, a primary examiner and/or supervisory patent examiner will also participate.
       - If the applicant declines the interview, or if the interview cannot be scheduled within ten (10) calendar days from the date that the examiner first contacts the applicant, then the examiner will proceed consistent with current practice concerning responses after final rejection under 37 CFR 1.116.

Signature	Date
/Marc A. Berger/	October 25, 2013
Name (Print/Typed) Marc A. Berger	Practitioner Registration No. 44029

Note: *This form must be signed in accordance with 37 CFR 1.33. See 37 CFR 1.4(d) for signature requirements and certifications. Submit multiple forms if more than one signature is required, see below*.*

☐ * Total of _____ forms are submitted.

Privacy Act Statement

The **Privacy Act of 1974 (P.L. 93-579)** requires that you be given certain information in connection with your submission of the attached form related to a patent application or patent. Accordingly, pursuant to the requirements of the Act, please be advised that: (1) the general authority for the collection of this information is 35 U.S.C. 2(b)(2); (2) furnishing of the information solicited is voluntary; and (3) the principal purpose for which the information is used by the U.S. Patent and Trademark Office is to process and/or examine your submission related to a patent application or patent. If you do not furnish the requested information, the U.S. Patent and Trademark Office may not be able to process and/or examine your submission, which may result in termination of proceedings or abandonment of the application or expiration of the patent.

The information provided by you in this form will be subject to the following routine uses:

1. The information on this form will be treated confidentially to the extent allowed under the Freedom of Information Act (5 U.S.C. 552) and the Privacy Act (5 U.S.C 552a). Records from this system of records may be disclosed to the Department of Justice to determine whether disclosure of these records is required by the Freedom of Information Act.
2. A record from this system of records may be disclosed, as a routine use, in the course of presenting evidence to a court, magistrate, or administrative tribunal, including disclosures to opposing counsel in the course of settlement negotiations.
3. A record in this system of records may be disclosed, as a routine use, to a Member of Congress submitting a request involving an individual, to whom the record pertains, when the individual has requested assistance from the Member with respect to the subject matter of the record.
4. A record in this system of records may be disclosed, as a routine use, to a contractor of the Agency having need for the information in order to perform a contract. Recipients of information shall be required to comply with the requirements of the Privacy Act of 1974, as amended, pursuant to 5 U.S.C. 552a(m).
5. A record related to an International Application filed under the Patent Cooperation Treaty in this system of records may be disclosed, as a routine use, to the International Bureau of the World Intellectual Property Organization, pursuant to the Patent Cooperation Treaty.
6. A record in this system of records may be disclosed, as a routine use, to another federal agency for purposes of National Security review (35 U.S.C. 181) and for review pursuant to the Atomic Energy Act (42 U.S.C. 218(c)).
7. A record from this system of records may be disclosed, as a routine use, to the Administrator, General Services, or his/her designee, during an inspection of records conducted by GSA as part of that agency's responsibility to recommend improvements in records management practices and programs, under authority of 44 U.S.C. 2904 and 2906. Such disclosure shall be made in accordance with the GSA regulations governing inspection of records for this purpose, and any other relevant (*i.e.*, GSA or Commerce) directive. Such disclosure shall not be used to make determinations about individuals.
8. A record from this system of records may be disclosed, as a routine use, to the public after either publication of the application pursuant to 35 U.S.C. 122(b) or issuance of a patent pursuant to 35 U.S.C. 151. Further, a record may be disclosed, subject to the limitations of 37 CFR 1.14, as a routine use, to the public if the record was filed in an application which became abandoned or in which the proceedings were terminated and which application is referenced by either a published application, an application open to public inspection or an issued patent.
9. A record from this system of records may be disclosed, as a routine use, to a Federal, State, or local law enforcement agency, if the USPTO becomes aware of a violation or potential violation of law or regulation.

PTO/SB/08a (01-10)
Approved for use through 07/31/2012. OMB 0651-0031
U.S. Patent and Trademark Office; U.S. DEPARTMENT OF COMMERCE

Under the Paperwork Reduction Act of 1995, no persons are required to respond to a collection of information unless it contains a valid OMB control number.

INFORMATION DISCLOSURE STATEMENT BY APPLICANT

(Not for submission under 37 CFR 1.99)

Application Number	13710755
Filing Date	2011-12-04
First Named Inventor	Magnus Goertz
Art Unit	2171
Examiner Name	Ryan F. Pitaro
Attorney Docket Number	NEONODE.P039

U.S.PATENTS

Examiner Initial*	Cite No	Patent Number	Kind Code[1]	Issue Date	Name of Patentee or Applicant of cited Document	Pages,Columns,Lines where Relevant Passages or Relevant Figures Appear
	1	6765559	B2	2004-07-20	Hayakawa	
	2	6664983	B2	2003-12-16	Ludoplh	

If you wish to add additional U.S. Patent citation information please click the Add button.

U.S.PATENT APPLICATION PUBLICATIONS

Examiner Initial*	Cite No	Publication Number	Kind Code[1]	Publication Date	Name of Patentee or Applicant of cited Document	Pages,Columns,Lines where Relevant Passages or Relevant Figures Appear
	1					

If you wish to add additional U.S. Published Application citation information please click the Add button.

FOREIGN PATENT DOCUMENTS

Examiner Initial*	Cite No	Foreign Document Number[3]	Country Code[2] ¡	Kind Code[4]	Publication Date	Name of Patentee or Applicant of cited Document	Pages,Columns,Lines where Relevant Passages or Relevant Figures Appear	T[5]
	1							☐

If you wish to add additional Foreign Patent Document citation information please click the Add button

NON-PATENT LITERATURE DOCUMENTS

INFORMATION DISCLOSURE STATEMENT BY APPLICANT (**Not for submission under 37 CFR 1.99**)		
	Application Number	13710755
	Filing Date	2011-12-04
	First Named Inventor	Magnus Goertz
	Art Unit	2171
	Examiner Name	Ryan F. Pitaro
	Attorney Docket Number	NEONODE.P039

Examiner Initials*	Cite No	Include name of the author (in CAPITAL LETTERS), title of the article (when appropriate), title of the item (book, magazine, journal, serial, symposium, catalog, etc), date, pages(s), volume-issue number(s), publisher, city and/or country where published.	T[5]
	1	Launch 'em 3.02, October 8, 2001, Synergy Solutions Inc., pages 1 - 20.	☐

If you wish to add additional non-patent literature document citation information please click the Add button

EXAMINER SIGNATURE

Examiner Signature		Date Considered	

*EXAMINER: Initial if reference considered, whether or not citation is in conformance with MPEP 609. Draw line through a citation if not in conformance and not considered. Include copy of this form with next communication to applicant.

[1] See Kind Codes of USPTO Patent Documents at www.USPTO.GOV or MPEP 901.04. [2] Enter office that issued the document, by the two-letter code (WIPO Standard ST.3). [3] For Japanese patent documents, the indication of the year of the reign of the Emperor must precede the serial number of the patent document. [4] Kind of document by the appropriate symbols as indicated on the document under WIPO Standard ST.16 if possible. [5] Applicant is to place a check mark here if English language translation is attached.

INFORMATION DISCLOSURE STATEMENT BY APPLICANT (**Not for submission under 37 CFR 1.99**)		
	Application Number	13710755
	Filing Date	2011-12-04
	First Named Inventor	Magnus Goertz
	Art Unit	2171
	Examiner Name	Ryan F. Pitaro
	Attorney Docket Number	NEONODE.P039

CERTIFICATION STATEMENT

Please see 37 CFR 1.97 and 1.98 to make the appropriate selection(s):

☐ That each item of information contained in the information disclosure statement was first cited in any communication from a foreign patent office in a counterpart foreign application not more than three months prior to the filing of the information disclosure statement. See 37 CFR 1.97(e)(1).

OR

☐ That no item of information contained in the information disclosure statement was cited in a communication from a foreign patent office in a counterpart foreign application, and, to the knowledge of the person signing the certification after making reasonable inquiry, no item of information contained in the information disclosure statement was known to any individual designated in 37 CFR 1.56(c) more than three months prior to the filing of the information disclosure statement. See 37 CFR 1.97(e)(2).

☐ See attached certification statement.

☒ The fee set forth in 37 CFR 1.17 (p) has been submitted herewith.

☒ A certification statement is not submitted herewith.

SIGNATURE

A signature of the applicant or representative is required in accordance with CFR 1.33, 10.18. Please see CFR 1.4(d) for the form of the signature.

Signature	/Marc A. Berger/	Date (YYYY-MM-DD)	2013-10-25
Name/Print	Marc A. Berger	Registration Number	44029

This collection of information is required by 37 CFR 1.97 and 1.98. The information is required to obtain or retain a benefit by the public which is to file (and by the USPTO to process) an application. Confidentiality is governed by 35 U.S.C. 122 and 37 CFR 1.14. This collection is estimated to take 1 hour to complete, including gathering, preparing and submitting the completed application form to the USPTO. Time will vary depending upon the individual case. Any comments on the amount of time you require to complete this form and/or suggestions for reducing this burden, should be sent to the Chief Information Officer, U.S. Patent and Trademark Office, U.S. Department of Commerce, P.O. Box 1450, Alexandria, VA 22313-1450. DO NOT SEND FEES OR COMPLETED FORMS TO THIS ADDRESS. **SEND TO: Commissioner for Patents, P.O. Box 1450, Alexandria, VA 22313-1450.**

Privacy Act Statement

The Privacy Act of 1974 (P.L. 93-579) requires that you be given certain information in connection with your submission of the attached form related to a patent application or patent. Accordingly, pursuant to the requirements of the Act, please be advised that: (1) the general authority for the collection of this information is 35 U.S.C. 2(b)(2); (2) furnishing of the information solicited is voluntary; and (3) the principal purpose for which the information is used by the U.S. Patent and Trademark Office is to process and/or examine your submission related to a patent application or patent. If you do not furnish the requested information, the U.S. Patent and Trademark Office may not be able to process and/or examine your submission, which may result in termination of proceedings or abandonment of the application or expiration of the patent.

The information provided by you in this form will be subject to the following routine uses:

1. The information on this form will be treated confidentially to the extent allowed under the Freedom of Information Act (5 U.S.C. 552) and the Privacy Act (5 U.S.C. 552a). Records from this system of records may be disclosed to the Department of Justice to determine whether the Freedom of Information Act requires disclosure of these record s.

2. A record from this system of records may be disclosed, as a routine use, in the course of presenting evidence to a court, magistrate, or administrative tribunal, including disclosures to opposing counsel in the course of settlement negotiations.

3. A record in this system of records may be disclosed, as a routine use, to a Member of Congress submitting a request involving an individual, to whom the record pertains, when the individual has requested assistance from the Member with respect to the subject matter of the record.

4. A record in this system of records may be disclosed, as a routine use, to a contractor of the Agency having need for the information in order to perform a contract. Recipients of information shall be required to comply with the requirements of the Privacy Act of 1974, as amended, pursuant to 5 U.S.C. 552a(m).

5. A record related to an International Application filed under the Patent Cooperation Treaty in this system of records may be disclosed, as a routine use, to the International Bureau of the World Intellectual Property Organization, pursuant to the Patent Cooperation Treaty.

6. A record in this system of records may be disclosed, as a routine use, to another federal agency for purposes of National Security review (35 U.S.C. 181) and for review pursuant to the Atomic Energy Act (42 U.S.C. 218(c)).

7. A record from this system of records may be disclosed, as a routine use, to the Administrator, General Services, or his/her designee, during an inspection of records conducted by GSA as part of that agency's responsibility to recommend improvements in records management practices and programs, under authority of 44 U.S.C. 2904 and 2906. Such disclosure shall be made in accordance with the GSA regulations governing inspection of records for this purpose, and any other relevant (i.e., GSA or Commerce) directive. Such disclosure shall not be used to make determinations about individuals.

8. A record from this system of records may be disclosed, as a routine use, to the public after either publication of the application pursuant to 35 U.S.C. 122(b) or issuance of a patent pursuant to 35 U.S.C. 151. Further, a record may be disclosed, subject to the limitations of 37 CFR 1.14, as a routine use, to the public if the record was filed in an application which became abandoned or in which the proceedings were terminated and which application is referenced by either a published application, an application open to public inspections or an issued patent.

9. A record from this system of records may be disclosed, as a routine use, to a Federal, State, or local law enforcement agency, if the USPTO becomes aware of a violation or potential violation of law or regulation.

Electronic Patent Application Fee Transmittal	
Application Number:	13310755
Filing Date:	04-Dec-2011
Title of Invention:	USER INTERFACE
First Named Inventor/Applicant Name:	Magnus Goertz
Filer:	Marc Aron Berger
Attorney Docket Number:	NEONODE.P039
Filed as Large Entity	

Utility under 35 USC 111(a) Filing Fees

Description	Fee Code	Quantity	Amount	Sub-Total in USD($)
Basic Filing:				
Pages:				
Claims:				
Claims in Excess of 20	1202	2	80	160
Miscellaneous-Filing:				
Petition:				
Patent-Appeals-and-Interference:				
Post-Allowance-and-Post-Issuance:				
Extension-of-Time:				

Description	Fee Code	Quantity	Amount	Sub-Total in USD($)
Miscellaneous:				
Submission- Information Disclosure Stmt	1806	1	180	180
		Total in USD ($)		**340**

Electronic Acknowledgement Receipt	
EFS ID:	17225191
Application Number:	13310755
International Application Number:	
Confirmation Number:	1066
Title of Invention:	USER INTERFACE
First Named Inventor/Applicant Name:	Magnus Goertz
Customer Number:	75660
Filer:	Marc Aron Berger
Filer Authorized By:	
Attorney Docket Number:	NEONODE.P039
Receipt Date:	25-OCT-2013
Filing Date:	04-DEC-2011
Time Stamp:	05:13:48
Application Type:	Utility under 35 USC 111(a)

Payment information:

Submitted with Payment	yes
Payment Type	Credit Card
Payment was successfully received in RAM	$340
RAM confirmation Number	8652
Deposit Account	
Authorized User	

File Listing:

Document Number	Document Description	File Name	File Size(Bytes)/ Message Digest	Multi Part /.zip	Pages (if appl.)

1		NEONODE-P039_Amendment_10-25-2013.pdf	329437 079de9742f7cb9bef2d6ef968d6228ac0a0d2a15	yes	13

	Multipart Description/PDF files in .zip description		
	Document Description	**Start**	**End**
	Response After Final Action	1	1
	Claims	2	6
	Applicant Arguments/Remarks Made in an Amendment	7	13

Warnings:					
Information:					
2	After Final Consideration Program Request	NEONODE-P039_AfterFinalConsideration_10-25-2013.pdf	226035 2e52bff3b32aee2be1ac685db585a04b024dfe3a	no	2
Warnings:					
Information:					
3	Information Disclosure Statement (IDS) Form (SB08)	NEONODE-P039_InformationDisclosureStatement_10-25-2013.pdf	69869 6dabdca3d15cf195384736c165d02848038c5a8f	no	4
Warnings:					
Information:					
This is not an USPTO supplied IDS fillable form					
4	Non Patent Literature	LAUNCHEM-2.pdf	867711 5c076304b325ec169533f4b310e759829e0f3b5d	no	20
Warnings:					
Information:					
5	Fee Worksheet (SB06)	fee-info.pdf	31888 a75c4ad744de169f9b1e6af98ba0c718ec4bcb4b	no	2
Warnings:					
Information:					
			Total Files Size (in bytes):	1524940	

This Acknowledgement Receipt evidences receipt on the noted date by the USPTO of the indicated documents, characterized by the applicant, and including page counts, where applicable. It serves as evidence of receipt similar to a Post Card, as described in MPEP 503.

New Applications Under 35 U.S.C. 111
If a new application is being filed and the application includes the necessary components for a filing date (see 37 CFR 1.53(b)-(d) and MPEP 506), a Filing Receipt (37 CFR 1.54) will be issued in due course and the date shown on this Acknowledgement Receipt will establish the filing date of the application.

National Stage of an International Application under 35 U.S.C. 371
If a timely submission to enter the national stage of an international application is compliant with the conditions of 35 U.S.C. 371 and other applicable requirements a Form PCT/DO/EO/903 indicating acceptance of the application as a national stage submission under 35 U.S.C. 371 will be issued in addition to the Filing Receipt, in due course.

New International Application Filed with the USPTO as a Receiving Office
If a new international application is being filed and the international application includes the necessary components for an international filing date (see PCT Article 11 and MPEP 1810), a Notification of the International Application Number and of the International Filing Date (Form PCT/RO/105) will be issued in due course, subject to prescriptions concerning national security, and the date shown on this Acknowledgement Receipt will establish the international filing date of the application.

PTO/SB/06 (09-11)
Approved for use through 1/31/2014. OMB 0651-0032
U.S. Patent and Trademark Office; U.S. DEPARTMENT OF COMMERCE
Under the Paperwork Reduction Act of 1995, no persons are required to respond to a collection of information unless it displays a valid OMB control number.

PATENT APPLICATION FEE DETERMINATION RECORD Substitute for Form PTO-875	Application or Docket Number 13/310,755	Filing Date 12/04/2011	☐ To be Mailed

ENTITY: ☒ LARGE ☐ SMALL ☐ MICRO

APPLICATION AS FILED – PART I

	(Column 1)	(Column 2)		
FOR	NUMBER FILED	NUMBER EXTRA	RATE ($)	FEE ($)
☐ BASIC FEE (37 CFR 1.16(a), (b), or (c))	N/A	N/A	N/A	
☐ SEARCH FEE (37 CFR 1.16(k), (i), or (m))	N/A	N/A	N/A	
☐ EXAMINATION FEE (37 CFR 1.16(o), (p), or (q))	N/A	N/A	N/A	
TOTAL CLAIMS (37 CFR 1.16(i))	minus 20 =	*	X $ =	
INDEPENDENT CLAIMS (37 CFR 1.16(h))	minus 3 =	*	X $ =	
☐ APPLICATION SIZE FEE (37 CFR 1.16(s))	If the specification and drawings exceed 100 sheets of paper, the application size fee due is $310 ($155 for small entity) for each additional 50 sheets or fraction thereof. See 35 U.S.C. 41(a)(1)(G) and 37 CFR 1.16(s).			
☐ MULTIPLE DEPENDENT CLAIM PRESENT (37 CFR 1.16(j))				
* If the difference in column 1 is less than zero, enter "0" in column 2.			TOTAL	

APPLICATION AS AMENDED – PART II

AMENDMENT	10/25/2013	(Column 1) CLAIMS REMAINING AFTER AMENDMENT		(Column 2) HIGHEST NUMBER PREVIOUSLY PAID FOR	(Column 3) PRESENT EXTRA	RATE ($)	ADDITIONAL FEE ($)
	Total (37 CFR 1.16(i))	* 22	Minus	** 20	= 2	X $80 =	160
	Independent (37 CFR 1.16(h))	* 4	Minus	***4	= 0	X $420 =	0
	☐ Application Size Fee (37 CFR 1.16(s))						
	☐ FIRST PRESENTATION OF MULTIPLE DEPENDENT CLAIM (37 CFR 1.16(j))						
						TOTAL ADD'L FEE	**160**

AMENDMENT		(Column 1) CLAIMS REMAINING AFTER AMENDMENT		(Column 2) HIGHEST NUMBER PREVIOUSLY PAID FOR	(Column 3) PRESENT EXTRA	RATE ($)	ADDITIONAL FEE ($)
	Total (37 CFR 1.16(i))	*	Minus	**	=	X $ =	
	Independent (37 CFR 1.16(h))	*	Minus	***	=	X $ =	
	☐ Application Size Fee (37 CFR 1.16(s))						
	☐ FIRST PRESENTATION OF MULTIPLE DEPENDENT CLAIM (37 CFR 1.16(j))						
						TOTAL ADD'L FEE	

* If the entry in column 1 is less than the entry in column 2, write "0" in column 3.
** If the "Highest Number Previously Paid For" IN THIS SPACE is less than 20, enter "20".
*** If the "Highest Number Previously Paid For" IN THIS SPACE is less than 3, enter "3".
The "Highest Number Previously Paid For" (Total or Independent) is the highest number found in the appropriate box in column 1.

LIE
/DALE A. HALL/

This collection of information is required by 37 CFR 1.16. The information is required to obtain or retain a benefit by the public which is to file (and by the USPTO to process) an application. Confidentiality is governed by 35 U.S.C. 122 and 37 CFR 1.14. This collection is estimated to take 12 minutes to complete, including gathering, preparing, and submitting the completed application form to the USPTO. Time will vary depending upon the individual case. Any comments on the amount of time you require to complete this form and/or suggestions for reducing this burden, should be sent to the Chief Information Officer, U.S. Patent and Trademark Office, U.S. Department of Commerce, P.O. Box 1450, Alexandria, VA 22313-1450. DO NOT SEND FEES OR COMPLETED FORMS TO THIS ADDRESS. **SEND TO: Commissioner for Patents, P.O. Box 1450, Alexandria, VA 22313-1450.**
If you need assistance in completing the form, call 1-800-PTO-9199 and select option 2.

UNITED STATES PATENT AND TRADEMARK OFFICE

UNITED STATES DEPARTMENT OF COMMERCE
United States Patent and Trademark Office
Address: COMMISSIONER FOR PATENTS
P.O. Box 1450
Alexandria, Virginia 22313-1450
www.uspto.gov

APPLICATION NO.	FILING DATE	FIRST NAMED INVENTOR	ATTORNEY DOCKET NO.	CONFIRMATION NO.
13/310,755	12/04/2011	Magnus Goertz	NEONODE.P039	1066

75660 7590 07/29/2013

Soquel Group, LLC
P.O. Box 691
Soquel, CA 95073

EXAMINER	
PITARO, RYAN F	
ART UNIT	PAPER NUMBER
2171	

NOTIFICATION DATE	DELIVERY MODE
07/29/2013	ELECTRONIC

Please find below and/or attached an Office communication concerning this application or proceeding.

The time period for reply, if any, is set in the attached communication.

Notice of the Office communication was sent electronically on above-indicated "Notification Date" to the following e-mail address(es):

pto@soquelgroup.com
rblumberg@soquelgroup.com
mberger@soquelgroup.com

Office Action Summary	Application No. 13/310,755	Applicant(s) GOERTZ, MAGNUS	
	Examiner RYAN PITARO	Art Unit 2171	AIA (First Inventor to File) Status No

-- The MAILING DATE of this communication appears on the cover sheet with the correspondence address --

Period for Reply

A SHORTENED STATUTORY PERIOD FOR REPLY IS SET TO EXPIRE *3* MONTH(S) OR THIRTY (30) DAYS, WHICHEVER IS LONGER, FROM THE MAILING DATE OF THIS COMMUNICATION.

- Extensions of time may be available under the provisions of 37 CFR 1.136(a). In no event, however, may a reply be timely filed after SIX (6) MONTHS from the mailing date of this communication.
- If NO period for reply is specified above, the maximum statutory period will apply and will expire SIX (6) MONTHS from the mailing date of this communication.
- Failure to reply within the set or extended period for reply will, by statute, cause the application to become ABANDONED (35 U.S.C. § 133). Any reply received by the Office later than three months after the mailing date of this communication, even if timely filed, may reduce any earned patent term adjustment. See 37 CFR 1.704(b).

Status

1)☒ Responsive to communication(s) filed on *5 May 2013*.

☐ A declaration(s)/affidavit(s) under **37 CFR 1.130(b)** was/were filed on _____.

2a)☒ This action is **FINAL**. 2b)☐ This action is non-final.

3)☐ An election was made by the applicant in response to a restriction requirement set forth during the interview on _____; the restriction requirement and election have been incorporated into this action.

4)☐ Since this application is in condition for allowance except for formal matters, prosecution as to the merits is closed in accordance with the practice under *Ex parte Quayle*, 1935 C.D. 11, 453 O.G. 213.

Disposition of Claims

5)☒ Claim(s) *19-21,28-37 and 39-45* is/are pending in the application.

5a) Of the above claim(s) *19,20 and 28-36* is/are withdrawn from consideration.

6)☐ Claim(s) _____ is/are allowed.

7)☒ Claim(s) *21 and 37-45* is/are rejected.

8)☐ Claim(s) _____ is/are objected to.

9)☐ Claim(s) _____ are subject to restriction and/or election requirement.

* If any claims have been determined allowable, you may be eligible to benefit from the **Patent Prosecution Highway** program at a participating intellectual property office for the corresponding application. For more information, please see http://www.uspto.gov/patents/init_events/pph/index.jsp or send an inquiry to PPHfeedback@uspto.gov.

Application Papers

10)☐ The specification is objected to by the Examiner.

11)☐ The drawing(s) filed on _____ is/are: a)☐ accepted or b)☐ objected to by the Examiner.

Applicant may not request that any objection to the drawing(s) be held in abeyance. See 37 CFR 1.85(a).

Replacement drawing sheet(s) including the correction is required if the drawing(s) is objected to. See 37 CFR 1.121(d).

Priority under 35 U.S.C. § 119

12)☐ Acknowledgment is made of a claim for foreign priority under 35 U.S.C. § 119(a)-(d) or (f).

Certified copies:

a)☐ All b)☐ Some * c)☐ None of the:

1.☐ Certified copies of the priority documents have been received.

2.☐ Certified copies of the priority documents have been received in Application No. _____.

3.☐ Copies of the certified copies of the priority documents have been received in this National Stage application from the International Bureau (PCT Rule 17.2(a)).

* See the attached detailed Office action for a list of the certified copies not received.

Attachment(s)

1) ☐ Notice of References Cited (PTO-892)

2) ☒ Information Disclosure Statement(s) (PTO/SB/08) Paper No(s)/Mail Date *4/14/2013*.

3) ☐ Interview Summary (PTO-413) Paper No(s)/Mail Date. _____ .

4) ☐ Other: _____.

Response to Amendment

This action is in response to the amendment filed 5/14/2013. Claims 21, 37, and 39 were amended. Claims 43-45 were added as new. This action is Final.

Claim Rejections - 35 USC § 112

The following is a quotation of 35 U.S.C. 112(a):
(a) IN GENERAL.—The specification shall contain a written description of the invention, and of the manner and process of making and using it, in such full, clear, concise, and exact terms as to enable any person skilled in the art to which it pertains, or with which it is most nearly connected, to make and use the same, and shall set forth the best mode contemplated by the inventor or joint inventor of carrying out the invention.

The following is a quotation of 35 U.S.C. 112 (pre-AIA), first paragraph:
The specification shall contain a written description of the invention, and of the manner and process of making and using it, in such full, clear, concise, and exact terms as to enable any person skilled in the art to which it pertains, or with which it is most nearly connected, to make and use the same and shall set forth the best mode contemplated by the inventor of carrying out his invention.

Claims 43-45 are rejected under 35 U.S.C. 112(a) or 35 U.S.C. 112 (pre-AIA), first paragraph, as failing to comply with the written description requirement. The claim(s) contains subject matter which was not described in the specification in such a way as to reasonably convey to one skilled in the relevant art that the inventor or a joint inventor, or for pre-AIA the inventor(s), at the time the application was filed, had possession of the claimed invention.

The availability, public knowledge, or involvement of a password/passcode has not been described in such a way as to reasonably convey to one skilled in the relevant art that the inventor or a joint inventor, or for pre-AIA the inventor(s), at the time the application was filed, had possession of the claimed invention. There is no mention of the subject matter described in claims 43-45 on page 2 of the specification lines 25-28

where the applicant alleges it can be found. Figure 2 at best shows a key (216), but fails to mention if this key represents a password/passcode/lock/unlock feature, let alone if a password is user-specific, or a gesture is publicly available etc.

Claim Rejections - 35 USC § 103

The following is a quotation of 35 U.S.C. 103(a) which forms the basis for all obviousness rejections set forth in this Office action:

> (a) A patent may not be obtained though the invention is not identically disclosed or described as set forth in section 102 of this title, if the differences between the subject matter sought to be patented and the prior art are such that the subject matter as a whole would have been obvious at the time the invention was made to a person having ordinary skill in the art to which said subject matter pertains. Patentability shall not be negatived by the manner in which the invention was made.

Claims 21, 37and 39 are rejected under 35 U.S.C. 103(a) as being unpatentable over Hansen (“Hansen”, US 5,821,930) in view of Hirayama et al (“Hirayama”, US 5,406,307).

As per claim 21, Hansen teaches a non-transitory computer readable medium storing instructions, which when executed by a processor of an electronic device having a touch-sensitive surface, cause the processor to enable a user interface of the device, (Column 3 lines 49- Column 4 lines 4) the user interface comprising at least two states, namely (a) tap-present state, wherein a plurality of tap-activatable icons for a respective plurality of pre-designated functions are present, each system function being activated

in response to a tap on its respective icon (Figure 3B, Column 5 lines 14-25), and (b) a tap absent state, wherein tap-activatable icons are absent (Figure 3A, Column 5 lines 6-13), for transitioning the user interface from the tap-absent state to the tap-present state in response to a multi-step user gesture comprising (i) an object touching the touch sensitive surface at a location, and (ii) the object gliding along the touch sensitive surface away from the touched location (Column 4 lines 34-48, The user touches the touch sensitive screen near a predetermined area, then draw his/her finger across the touch sensitive screen. See also Column 5 lines 6-25).

Hansen fails to distinctly point out a multi-step user gesture at an otherwise-activatable graphic. However, Hirayama teaches activating utilizing a multi-step user gesture comprising an object touching the touch sensitive surface at a location where an otherwise-activatable graphic is provided, and the object gliding along the touch sensitive area away from the touched location (Figure 3A, Column 4 lines 61-Column 5 lines 13, If the user moves the point of the pen to the display without being separated therefrom after having touched the desired icon with the point of the pen and takes the point of the pen off the surface of the input tablet, an enlarged from of the processing display mode of the desired icon is automatically displayed on the display portion).

Therefore it would have been obvious to one of ordinary skill in the art at the time of the invention to combine the teaching of Hirayama with the teaching of Hansen. Motivation to do so would have been to provide way for the user to enable the preferred mode such that it is unlikely to be carried out through unintentional movement or touching. Furthermore the predetermined area of Hansen is unknown to the user since

it is not displayed, by adding the graphic indicator of Hirayama the user will not have to guess the predetermined area location.

As per claim 37, Hirayama teaches the computer readable medium of claim 21, wherein any state transition elicited by a user gesture that begins at a location at which the otherwise-activatable graphic is provided, transitions to the tap-present state (Figure 3A, Column 4 lines 61-Column 5 lines 13, If the user moves the point of the pen to the display without being separated therefrom after having touched the desired icon with the point of the pen and takes the point of the pen off the surface of the input tablet, an enlarged from of the processing display mode of the desired icon is automatically displayed on the display portion).

As per claim 39, Hansen teaches the computer readable medium of claim 21, wherein the tap-present state does not display the tap-activatable icons within a window frame (Figure 3B).

As per claim 43, Hansen teaches the computer readable medium of claim 21, wherein a description of the multi-step user gesture is publicly available (Column 4 lines 34-48, The user touches the touch sensitive screen near a predetermined area, then draw his/her finger across the touch sensitive screen. See also (Column 5 lines 6-25).

As per claim 44, Hansen teaches the computer readable medium of claim 21, wherein the multi-step user gesture does not require non-public knowledge (Column 4 lines 34-48, The user touches the touch sensitive screen near a predetermined area, then draw his/her finger across the touch sensitive screen. See also (Column 5 lines 6-25).

As per claim 45, Hansen teaches the computer readable medium of claim 21, wherein the multi-step user gesture does not involve a user-specific password or passcode (Column 4 lines 34-48, The user touches the touch sensitive screen near a predetermined area, then draw his/her finger across the touch sensitive screen. See also (Column 5 lines 6-25).

Claims 40 and 41 are rejected under 35 U.S.C. 103(a) as being unpatentable over Hansen (“Hansen”, US 5,821,930) in view of Hirayama et al (“Hirayama”, US 5,406,307) in view of Pogue, David (“Pogue", “Palm Pilot: The Ultimate Guide, 2nd Edition).

As per claim 40, Hansen-Hirayama fails to specifically teach a help function. However, Pogue teaches the computer readable medium of claim 21, wherein the plurality of pre-designated system functions comprises a help function (Pogue, Page 29, Graffiti Help). Therefore it would have been obvious to one of ordinary skill in the art at

the time of the invention to combine the teaching of Pogue with the medium of Hansen-Hirayama. Motivation to do so would have been to provide the user with a multitude of different functions so that the capabilities of the handheld computer are vast.

As per claim 41, Pogue teaches computer readable medium of claim 21, wherein the plurality of pre-designated system functions comprises a clock function (Pogue, Page 519, Clock Hack).

Claim 42 is rejected under 35 U.S.C. 103(a) as being unpatentable over Hansen ("Hansen", US 5,821,930) in view of Hirayama et al ("Hirayama", US 5,406,307) in view of Carlson, Jeff ("Carlson", Visual Quickstart Guide Palm Organizers).

As per claim 42, Hansen-Hirayama fails to specifically teach an alarm function. However, Carlson teaches the computer readable medium of claim 21, wherein the plurality of pre-designated system functions comprises an alarm function (Page 47, Figure 2.26 Alarm Hack). Therefore it would have been obvious to one of ordinary skill in the art at the time of the invention to combine the teaching of Carlson with the medium of Hansen-Hirayama. Motivation to do so would have been to provide the user with a multitude of different functions so that the capabilities of the handheld computer are vast.

Response to Arguments

Applicant's arguments with respect to claims 21,37,39-45 have been considered but are moot because the arguments do not apply to any of the references being used in the current rejection.

Conclusion

Applicant's amendment necessitated the new ground(s) of rejection presented in this Office action. Accordingly, **THIS ACTION IS MADE FINAL**. See MPEP § 706.07(a). Applicant is reminded of the extension of time policy as set forth in 37 CFR 1.136(a).

A shortened statutory period for reply to this final action is set to expire THREE MONTHS from the mailing date of this action. In the event a first reply is filed within TWO MONTHS of the mailing date of this final action and the advisory action is not mailed until after the end of the THREE-MONTH shortened statutory period, then the shortened statutory period will expire on the date the advisory action is mailed, and any extension fee pursuant to 37 CFR 1.136(a) will be calculated from the mailing date of the advisory action. In no event, however, will the statutory period for reply expire later than SIX MONTHS from the date of this final action.

Any inquiry concerning this communication or earlier communications from the examiner should be directed to RYAN PITARO whose telephone number is (571)272-

4071. The examiner can normally be reached on 9:00am - 5:30pm Mondays through Fridays.

If attempts to reach the examiner by telephone are unsuccessful, the examiner's supervisor, Matt Kim can be reached on 571-272-4182. The fax phone number for the organization where this application or proceeding is assigned is 571-273-8300.

Information regarding the status of an application may be obtained from the Patent Application Information Retrieval (PAIR) system. Status information for published applications may be obtained from either Private PAIR or Public PAIR. Status information for unpublished applications is available through Private PAIR only. For more information about the PAIR system, see http://pair-direct.uspto.gov. Should you have questions on access to the Private PAIR system, contact the Electronic Business Center (EBC) at 866-217-9197 (toll-free). If you would like assistance from a USPTO Customer Service Representative or access to the automated information system, call 800-786-9199 (IN USA OR CANADA) or 571-272-1000.

/Ryan F Pitaro/
Primary Examiner, Art Unit 2171

Search Notes	Application/Control No.	Applicant(s)/Patent Under Reexamination
	13310755	GOERTZ, MAGNUS
	Examiner	Art Unit
	RYAN PITARO	2171

CPC- SEARCHED		
Symbol	Date	Examiner

CPC COMBINATION SETS - SEARCHED		
Symbol	Date	Examiner

US CLASSIFICATION SEARCHED			
Class	Subclass	Date	Examiner

SEARCH NOTES		
Search Notes	Date	Examiner
EAST	5/3/2012	RFP
Internet	5/3/2012	RFP
Inventor Name	5/3/2012	RFP
IEEE	5/3/2012	RFP
Update Search	9/17/2012	RFP
Update Search	2/22/2013	RFP
Update Search	7/23/2013	RFP

INTERFERENCE SEARCH			
US Class/ CPC Symbol	US Subclass / CPC Group	Date	Examiner

PTO/SB/08a (01-10)
Approved for use through 07/31/2012. OMB 0651-0031
U.S. Patent and Trademark Office; U.S. DEPARTMENT OF COMMERCE

Under the Paperwork Reduction Act of 1995, no persons are required to respond to a collection of information unless it contains a valid OMB control number.

INFORMATION DISCLOSURE STATEMENT BY APPLICANT
(Not for submission under 37 CFR 1.99)

Application Number	13310755
Filing Date	2011-12-04
First Named Inventor	Magnus Goertz
Art Unit	2171
Examiner Name	Ryan F. Pitaro
Attorney Docket Number	NEONODE.P039

U.S.PATENTS

Examiner Initial*	Cite No	Patent Number	Kind Code[1]	Issue Date	Name of Patentee or Applicant of cited Document	Pages,Columns,Lines where Relevant Passages or Relevant Figures Appear
/R.P./	1	5785439	A	1998-07-28	Bowen	
/R.P./	2	5821930	A	1998-10-13	Hansen	
/R.P./	3	5898434	A	1999-04-27	Small et al.	
/R.P./	4	6304261	B1	2001-10-16	Shields et al.	
/R.P./	5	6646633	B1	2003-11-11	Nicolas	
/R.P./	6	7304638	B2	2007-12-04	Murphy	

If you wish to add additional U.S. Patent citation information please click the Add button.

U.S.PATENT APPLICATION PUBLICATIONS

Examiner Initial*	Cite No	Publication Number	Kind Code[1]	Publication Date	Name of Patentee or Applicant of cited Document	Pages,Columns,Lines where Relevant Passages or Relevant Figures Appear

INFORMATION DISCLOSURE STATEMENT BY APPLICANT (**Not for submission under 37 CFR 1.99**)		
	Application Number	13310755
	Filing Date	2011-12-04
	First Named Inventor	Magnus Goertz
	Art Unit	2171
	Examiner Name	Ryan F. Pitaro
	Attorney Docket Number	NEONODE.P039

	1					

If you wish to add additional U.S. Published Application citation information please click the Add button.

FOREIGN PATENT DOCUMENTS

Examiner Initial*	Cite No	Foreign Document Number[3]	Country Code[2] ¡	Kind Code[4]	Publication Date	Name of Patentee or Applicant of cited Document	Pages,Columns,Lines where Relevant Passages or Relevant Figures Appear	T[5]
	1							☐

If you wish to add additional Foreign Patent Document citation information please click the Add button

NON-PATENT LITERATURE DOCUMENTS

Examiner Initials*	Cite No	Include name of the author (in CAPITAL LETTERS), title of the article (when appropriate), title of the item (book, magazine, journal, serial, symposium, catalog, etc), date, pages(s), volume-issue number(s), publisher, city and/or country where published.	T[5]
	1		☐

If you wish to add additional non-patent literature document citation information please click the Add button

EXAMINER SIGNATURE

Examiner Signature	/Ryan Pitaro/	Date Considered	07/23/2013

*EXAMINER: Initial if reference considered, whether or not citation is in conformance with MPEP 609. Draw line through a citation if not in conformance and not considered. Include copy of this form with next communication to applicant.

[1] See Kind Codes of USPTO Patent Documents at www.USPTO.GOV or MPEP 901.04. [2] Enter office that issued the document, by the two-letter code (WIPO Standard ST.3). [3] For Japanese patent documents, the indication of the year of the reign of the Emperor must precede the serial number of the patent document. [4] Kind of document by the appropriate symbols as indicated on the document under WIPO Standard ST.16 if possible. [5] Applicant is to place a check mark here if English language translation is attached.

INFORMATION DISCLOSURE STATEMENT BY APPLICANT (**Not for submission under 37 CFR 1.99**)		
	Application Number	13310755
	Filing Date	2011-12-04
	First Named Inventor	Magnus Goertz
	Art Unit	2171
	Examiner Name	Ryan F. Pitaro
	Attorney Docket Number	NEONODE.P039

CERTIFICATION STATEMENT

Please see 37 CFR 1.97 and 1.98 to make the appropriate selection(s):

☐ That each item of information contained in the information disclosure statement was first cited in any communication from a foreign patent office in a counterpart foreign application not more than three months prior to the filing of the information disclosure statement. See 37 CFR 1.97(e)(1).

OR

☐ That no item of information contained in the information disclosure statement was cited in a communication from a foreign patent office in a counterpart foreign application, and, to the knowledge of the person signing the certification after making reasonable inquiry, no item of information contained in the information disclosure statement was known to any individual designated in 37 CFR 1.56(c) more than three months prior to the filing of the information disclosure statement. See 37 CFR 1.97(e)(2).

☐ See attached certification statement.

☒ The fee set forth in 37 CFR 1.17 (p) has been submitted herewith.

☒ A certification statement is not submitted herewith.

SIGNATURE

A signature of the applicant or representative is required in accordance with CFR 1.33, 10.18. Please see CFR 1.4(d) for the form of the signature.

Signature	/Marc A. Berger/	Date (YYYY-MM-DD)	2013-04-14
Name/Print	Marc A. Berger	Registration Number	44029

This collection of information is required by 37 CFR 1.97 and 1.98. The information is required to obtain or retain a benefit by the public which is to file (and by the USPTO to process) an application. Confidentiality is governed by 35 U.S.C. 122 and 37 CFR 1.14. This collection is estimated to take 1 hour to complete, including gathering, preparing and submitting the completed application form to the USPTO. Time will vary depending upon the individual case. Any comments on the amount of time you require to complete this form and/or suggestions for reducing this burden, should be sent to the Chief Information Officer, U.S. Patent and Trademark Office, U.S. Department of Commerce, P.O. Box 1450, Alexandria, VA 22313-1450. DO NOT SEND FEES OR COMPLETED FORMS TO THIS ADDRESS. **SEND TO: Commissioner for Patents, P.O. Box 1450, Alexandria, VA 22313-1450.**

Privacy Act Statement

The Privacy Act of 1974 (P.L. 93-579) requires that you be given certain information in connection with your submission of the attached form related to a patent application or patent. Accordingly, pursuant to the requirements of the Act, please be advised that: (1) the general authority for the collection of this information is 35 U.S.C. 2(b)(2); (2) furnishing of the information solicited is voluntary; and (3) the principal purpose for which the information is used by the U.S. Patent and Trademark Office is to process and/or examine your submission related to a patent application or patent. If you do not furnish the requested information, the U.S. Patent and Trademark Office may not be able to process and/or examine your submission, which may result in termination of proceedings or abandonment of the application or expiration of the patent.

The information provided by you in this form will be subject to the following routine uses:

1. The information on this form will be treated confidentially to the extent allowed under the Freedom of Information Act (5 U.S.C. 552) and the Privacy Act (5 U.S.C. 552a). Records from this system of records may be disclosed to the Department of Justice to determine whether the Freedom of Information Act requires disclosure of these record s.

2. A record from this system of records may be disclosed, as a routine use, in the course of presenting evidence to a court, magistrate, or administrative tribunal, including disclosures to opposing counsel in the course of settlement negotiations.

3. A record in this system of records may be disclosed, as a routine use, to a Member of Congress submitting a request involving an individual, to whom the record pertains, when the individual has requested assistance from the Member with respect to the subject matter of the record.

4. A record in this system of records may be disclosed, as a routine use, to a contractor of the Agency having need for the information in order to perform a contract. Recipients of information shall be required to comply with the requirements of the Privacy Act of 1974, as amended, pursuant to 5 U.S.C. 552a(m).

5. A record related to an International Application filed under the Patent Cooperation Treaty in this system of records may be disclosed, as a routine use, to the International Bureau of the World Intellectual Property Organization, pursuant to the Patent Cooperation Treaty.

6. A record in this system of records may be disclosed, as a routine use, to another federal agency for purposes of National Security review (35 U.S.C. 181) and for review pursuant to the Atomic Energy Act (42 U.S.C. 218(c)).

7. A record from this system of records may be disclosed, as a routine use, to the Administrator, General Services, or his/her designee, during an inspection of records conducted by GSA as part of that agency's responsibility to recommend improvements in records management practices and programs, under authority of 44 U.S.C. 2904 and 2906. Such disclosure shall be made in accordance with the GSA regulations governing inspection of records for this purpose, and any other relevant (i.e., GSA or Commerce) directive. Such disclosure shall not be used to make determinations about individuals.

8. A record from this system of records may be disclosed, as a routine use, to the public after either publication of the application pursuant to 35 U.S.C. 122(b) or issuance of a patent pursuant to 35 U.S.C. 151. Further, a record may be disclosed, subject to the limitations of 37 CFR 1.14, as a routine use, to the public if the record was filed in an application which became abandoned or in which the proceedings were terminated and which application is referenced by either a published application, an application open to public inspections or an issued patent.

9. A record from this system of records may be disclosed, as a routine use, to a Federal, State, or local law enforcement agency, if the USPTO becomes aware of a violation or potential violation of law or regulation.

EAST Search History

EAST Search History (Prior Art)

Ref #	Hits	Search Query	DBs	Default Operator	Plurals	Time Stamp
S1	2	"20080201637"	US-PGPUB; USPAT; EPO; DERWENT; IBM_TDB	OR	ON	2012/05/02 19:01
S2	2	"8015494"	US-PGPUB; USPAT; EPO; DERWENT; IBM_TDB	OR	ON	2012/05/02 19:14
S3	7	widget with combin$7 with clock	US-PGPUB; USPAT; EPO; DERWENT; IBM_TDB	OR	ON	2012/05/02 19:19
S4	4	"2008023528"	US-PGPUB; USPAT; EPO; DERWENT; IBM_TDB	OR	ON	2012/05/02 22:10
S5	2	"20080235285"	US-PGPUB; USPAT; EPO; DERWENT; IBM_TDB	OR	ON	2012/05/02 22:11
S6	4	slide with answer with (hang disconnect)	US-PGPUB; USPAT; EPO; DERWENT; IBM_TDB	OR	ON	2012/05/03 12:30
S7	500	slide with answer	US-PGPUB; USPAT; EPO; DERWENT; IBM_TDB	OR	ON	2012/05/03 12:30
S8	54	slide with answer and "715"/$.ccls.	US-PGPUB; USPAT; EPO; DERWENT; IBM_TDB	OR	ON	2012/05/03 12:30
S9	0	swipe with answer and "715"/$.ccls.	US-PGPUB; USPAT; EPO; DERWENT; IBM_TDB	OR	ON	2012/05/03 12:33
S10	2	"20120052920"	US-PGPUB; USPAT; EPO; DERWENT; IBM_TDB	OR	ON	2012/05/03 12:35

S11	2	answer with ignore with (slide swipe glide)	US-PGPUB; USPAT; EPO; DERWENT; IBM_TDB	OR	ON	2012/05/03 12:43
S12	7555	(keypad keyboard) with (input entry) with (mobile telephone phone) and @ay<="2002"	US-PGPUB; USPAT; EPO; DERWENT; IBM_TDB	OR	ON	2012/05/03 12:53
S13	348	(keypad keyboard) with (input entry) with (mobile telephone phone) and @ay<="2002" and "715"/$.ccls.	US-PGPUB; USPAT; EPO; DERWENT; IBM_TDB	OR	ON	2012/05/03 12:53
S14	263	(keypad keyboard) with (input entry) with (mobile telephone phone) and @ay<="2001" and "715"/$.ccls.	US-PGPUB; USPAT; EPO; DERWENT; IBM_TDB	OR	ON	2012/05/03 12:53
S15	71	(keypad keyboard) with (input entry) with (mobile telephone phone) with (number sms text) and @ay<="2001" and "715"/$.ccls.	US-PGPUB; USPAT; EPO; DERWENT; IBM_TDB	OR	ON	2012/05/03 12:54
S16	3	(touch virtual) near2(keypad keyboard) with (input entry) with (mobile telephone phone) with (number sms text) and @ay<="2001" and "715"/$.ccls.	US-PGPUB; USPAT; EPO; DERWENT; IBM_TDB	OR	ON	2012/05/03 12:54
S17	10	(touch virtual) near2(keypad keyboard) with (input entry) with (mobile telephone phone) and @ay<="2001" and "715"/$.ccls.	US-PGPUB; USPAT; EPO; DERWENT; IBM_TDB	OR	ON	2012/05/03 12:55
S18	18	(touch virtual) near2(keypad keyboard) with (input entry) with (mobile telephone phone) and @ay<="2002" and "715"/$.ccls.	US-PGPUB; USPAT; EPO; DERWENT; IBM_TDB	OR	ON	2012/05/03 12:56
S19	12	("20060088216" | "4763356" | "5159664" | "5363481" | "5500923" | "5974161" | "6084598" | "6243071" | "6424357" | "6791537" | "6810272" | "6944472").PN.	US-PGPUB; USPAT; USOCR	OR	ON	2012/05/03 12:57
S20	13	("4972496" | "5157783" | "5199104" | "5237651" | "5283864" | "5341293" | "5347295" | "5367453" | "5377281" | "5390281" | "5392387" | "5398310" | "5404442").PN.	US-PGPUB; USPAT; USOCR	OR	ON	2012/05/03 12:58
S21	2038	(smartphone (smart near phone)) and @ay<="2002"	US-PGPUB; USPAT; USOCR	OR	ON	2012/05/03 12:59
S22	88	(smartphone (smart near phone)) and @ay<="2002" and (touch virtual) near (keypad keyboard)	US-PGPUB; USPAT; USOCR	OR	ON	2012/05/03 13:00
S23	12	(smartphone (smart near phone)) and @ay<="2002" and (touch	US-PGPUB; USPAT;	OR	ON	2012/05/03 13:01

		virtual) near (keypad keyboard) and sms	USOCR			
S24	183	@ay<="2002" and (touch virtual) near (keypad keyboard) and sms	US-PGPUB; USPAT; USOCR	OR	ON	2012/05/03 13:03
S25	5	@ay<="2002" and (touch virtual) near (keypad keyboard) with sms	US-PGPUB; USPAT; USOCR	OR	ON	2012/05/03 13:04
S26	48	@ay<="2002" and (touch virtual) near (keypad keyboard) and sms with phone	US-PGPUB; USPAT; USOCR	OR	ON	2012/05/03 13:04
S27	185	save near4 text with application	US-PGPUB; USPAT; USOCR	OR	ON	2012/05/03 13:11
S28	52	save near4 text with application and @ay<="2002"	US-PGPUB; USPAT; USOCR	OR	ON	2012/05/03 13:12
S29	0	save near4 (string text) with application with (phone sms email) and @ay<="2002"	US-PGPUB; USPAT; USOCR	OR	ON	2012/05/03 13:13
S30	14	save near4 (string text) with (phone sms email) and @ay<="2002"	US-PGPUB; USPAT; USOCR	OR	ON	2012/05/03 13:13
S31	198	(string text) near input with (phone sms email) and @ay<="2002"	US-PGPUB; USPAT; USOCR	OR	ON	2012/05/03 13:15
S32	272	(string text) near2 input with (phone sms email) and @ay<="2002"	US-PGPUB; USPAT; USOCR	OR	ON	2012/05/03 13:16
S33	0	(string text) near2 input with execute with (phone sms email) and @ay<="2002"	US-PGPUB; USPAT; USOCR	OR	ON	2012/05/03 13:16
S34	16	(string text) near2 input with application with (phone sms email) and @ay<="2002"	US-PGPUB; USPAT; USOCR	OR	ON	2012/05/03 13:16
S35	6	(string text) near2 input with option with (phone call sms email) and @ay<="2002"	US-PGPUB; USPAT; USOCR	OR	ON	2012/05/03 13:19
S36	412	(string text) with option with (phone call sms email) and @ay<="2002"	US-PGPUB; USPAT; USOCR	OR	ON	2012/05/03 13:20
S37	43	(string text) with option with (phone call sms email) and @ay<="2002" and "715"/$.ccls.	US-PGPUB; USPAT; USOCR	OR	ON	2012/05/03 13:20
S38	99	(number) with option with (phone call sms email contact) and @ay<="2002" and "715"/$.ccls.	US-PGPUB; USPAT; USOCR	OR	ON	2012/05/03 13:22
S39	2	input near(number) with option with (phone call sms email contact) and @ay<="2002" and "715"/$.ccls.	US-PGPUB; USPAT; USOCR	OR	ON	2012/05/03 13:23
S40	105	input near3 (number) with (phone call sms email contact) and @ay<="2002" and "715"/$.ccls.	US-PGPUB; USPAT; USOCR	OR	ON	2012/05/03 13:25
S41	8	input near3 (number) with option with (phone call sms email contact) and @ay<="2002" and "715"/$.ccls.	US-PGPUB; USPAT; USOCR	OR	ON	2012/05/03 13:25
S42	5	field with (number) with option with	US-PGPUB;	OR	ON	2012/05/03

		(phone call sms email contact) and @ay<="2002" and "715"/$.ccls.	USPAT; USOCR			13:26
S43	99	(number) with option with (phone call sms email contact) and @ay<="2002" and "715"/$.ccls.	US-PGPUB; USPAT; USOCR	OR	ON	2012/05/03 13:27
S44	11	(number) with option with list with (phone call sms email contact) and @ay<="2002" and "715"/$.ccls.	US-PGPUB; USPAT; USOCR	OR	ON	2012/05/03 13:27
S45	0	file near type with switch with (touch tap) and @ay<="2002"	US-PGPUB; USPAT; EPO; DERWENT; IBM_TDB	OR	ON	2012/05/03 14:07
S46	2202	type with switch with (touch tap) and @ay<="2002"	US-PGPUB; USPAT; EPO; DERWENT; IBM_TDB	OR	ON	2012/05/03 14:07
S47	57	(application file app icon) with type with switch with (touch tap) and @ay<="2002"	US-PGPUB; USPAT; EPO; DERWENT; IBM_TDB	OR	ON	2012/05/03 14:07
S48	46	(application file app icon) near switch with (touch tap) and @ay<="2002"	US-PGPUB; USPAT; EPO; DERWENT; IBM_TDB	OR	ON	2012/05/03 14:08
S49	39263	(application file app icon) with (second near2 (set subset)) switch with (touch tap) and @ay<="2002"	US-PGPUB; USPAT; EPO; DERWENT; IBM_TDB	OR	ON	2012/05/03 14:09
S50	13	(application file app icon) with (second near2 (set subset)) with (touch tap) and @ay<="2002"	US-PGPUB; USPAT; EPO; DERWENT; IBM_TDB	OR	ON	2012/05/03 14:09
S51	505	(application) with data with (second near2 (set subset)) and @ay<="2002"	US-PGPUB; USPAT; EPO; DERWENT; IBM_TDB	OR	ON	2012/05/03 14:13
S52	8	(application) with data with (second near2 (set subset)) with (switch) and @ay<="2002"	US-PGPUB; USPAT; EPO; DERWENT; IBM_TDB	OR	ON	2012/05/03 14:13
S53	0	(application) with data with (second near2 (set subset)) with (toggle) and @ay<="2002"	US-PGPUB; USPAT; EPO; DERWENT; IBM_TDB	OR	ON	2012/05/03 14:14
S54	41014	file near type (second near2 (set subset)) with (toggle) and @ay<="2002"	US-PGPUB; USPAT; EPO; DERWENT; IBM_TDB	OR	ON	2012/05/03 14:14
S55	0	file near type with (second near2	US-PGPUB;	OR	ON	2012/05/03

		(set subset)) with (toggle) and @ay<="2002"	USPAT; EPO; DERWENT; IBM_TDB			14:14
S56	2	file near type with (toggle) and @ay<="2002"	US-PGPUB; USPAT; EPO; DERWENT; IBM_TDB	OR	ON	2012/05/03 14:14
S57	44	file near type with (switch) and @ay<="2002"	US-PGPUB; USPAT; EPO; DERWENT; IBM_TDB	OR	ON	2012/05/03 14:15
S58	3	"20080120576"	US-PGPUB; USPAT; EPO; DERWENT; IBM_TDB	OR	ON	2012/05/03 17:57
S59	2	"20080198178"	US-PGPUB; USPAT; EPO; DERWENT; IBM_TDB	OR	ON	2012/05/03 18:00
S60	42	zoom with circ$8 with boundary	US-PGPUB; USPAT; EPO; DERWENT; IBM_TDB	OR	ON	2012/05/03 18:01
S61	22	zoom with circ$8 with boundary and @ay<="2001"	US-PGPUB; USPAT; EPO; DERWENT; IBM_TDB	OR	ON	2012/05/03 18:01
S62	26	zoom with circ$8 with boundary and @ay<="2003"	US-PGPUB; USPAT; EPO; DERWENT; IBM_TDB	OR	ON	2012/05/03 18:01
S63	0	zoom$7 with circ$8 with boundary and @ay<="2003" and "715"/$.ccls.	US-PGPUB; USPAT; EPO; DERWENT; IBM_TDB	OR	ON	2012/05/03 18:01
S64	0	zoom$7 with clockwise with boundary and @ay<="2003" and "715"/$.ccls.	US-PGPUB; USPAT; EPO; DERWENT; IBM_TDB	OR	ON	2012/05/03 18:02
S65	0	zoom$7 with clockwise same boundary and @ay<="2003" and "715"/$.ccls.	US-PGPUB; USPAT; EPO; DERWENT; IBM_TDB	OR	ON	2012/05/03 18:02
S66	2	zoom$7 with circ$7 same boundary and @ay<="2003" and "715"/$.ccls.	US-PGPUB; USPAT; EPO; DERWENT; IBM_TDB	OR	ON	2012/05/03 18:02
S67	5	zoom$7 with (clockwise radial circ$7)	US-PGPUB;	OR	ON	2012/05/03

		same2 (perimter boundary) and @ay<="2003" and "715"/$.ccls.	USPAT; EPO; DERWENT; IBM_TDB			18:04
S68	26	("20010009428" | "20020085037" | "20020101458" | "20020122072" | "20040021647" | "4931783" | "5276795" | "5581670" | "5627960" | "5634064" | "5638523" | "5666499" | "5689667" | "5760773" | "5798752" | "6037937" | "6097387" | "6118427" | "6246411" | "6262719" | "6369837" | "6549219" | "6865719" | "6918091" | "6938221" | "7058902").PN.	US-PGPUB; USPAT; USOCR	OR	ON	2012/05/03 18:05
S69	110	("5638523").URPN.	USPAT	OR	ON	2012/05/03 18:06
S70	0	lock with help with clock with setting	USPAT	OR	ON	2012/05/03 21:16
S71	1	"6346935".pn.	USPAT	OR	ON	2012/05/03 21:17
S72	6	"20040021643"	US-PGPUB; USPAT; EPO; JPO; DERWENT; IBM_TDB	OR	ON	2012/05/03 21:18
S73	2	"20020027549"	US-PGPUB; USPAT; EPO; JPO; DERWENT; IBM_TDB	OR	ON	2012/05/03 21:19
S74	0	profile with application with each with user	US-PGPUB; USPAT; EPO; JPO; DERWENT; IBM_TDB	OR	ON	2012/05/03 21:47
S75	16148	profile with application with user	US-PGPUB; USPAT; EPO; JPO; DERWENT; IBM_TDB	OR	ON	2012/05/03 21:47
S76	339	profile with application with multiple near3 user	US-PGPUB; USPAT; EPO; JPO; DERWENT; IBM_TDB	OR	ON	2012/05/03 21:47
S77	43	profile with application with multiple near3 user and "715"/$.ccls.	US-PGPUB; USPAT; EPO; JPO; DERWENT; IBM_TDB	OR	ON	2012/05/03 21:47
S78	1	profile with icons with multiple near3 user and "715"/$.ccls.	US-PGPUB; USPAT; EPO; JPO; DERWENT; IBM_TDB	OR	ON	2012/05/03 21:51
S79	38	(application software program apps widgets) with multiple near3 user near3 profile and "715"/$.ccls.	US-PGPUB; USPAT; EPO; JPO; DERWENT;	OR	ON	2012/05/03 21:52

			IBM_TDB			
S80	2	"5914709".pn.	US-PGPUB; USPAT; EPO; JPO; DERWENT; IBM_TDB	OR	ON	2012/05/03 22:05
S81	2	"6292179".pn.	US-PGPUB; USPAT; EPO; JPO; DERWENT; IBM_TDB	OR	ON	2012/05/03 22:05
S82	2	"5618232".pn.	US-PGPUB; USPAT; EPO; JPO; DERWENT; IBM_TDB	OR	ON	2012/05/03 22:06
S83	2	"20050253818"	US-PGPUB; USPAT; EPO; JPO; DERWENT; IBM_TDB	OR	ON	2012/05/03 22:06
S84	2	"7030861".pn.	US-PGPUB; USPAT; EPO; JPO; DERWENT; IBM_TDB	OR	ON	2012/05/03 22:07
S85	2	"5603053".pn.	US-PGPUB; USPAT; EPO; JPO; DERWENT; IBM_TDB	OR	ON	2012/05/03 22:07
S86	64	"240336"	US-PGPUB; USPAT; EPO; DERWENT; IBM_TDB	OR	ON	2012/05/03 22:31
S87	2	"240336"	EPO	OR	ON	2012/05/03 22:31
S88	1	"20070252822"	US-PGPUB; USPAT; USOCR	OR	ON	2012/05/09 09:52
S89	1	"20100056221"	US-PGPUB; USPAT; USOCR	OR	ON	2012/05/09 10:00
S90	3	"7475333"	US-PGPUB; USPAT; USOCR	OR	ON	2012/05/09 11:08
S91	1	"20060236264"	US-PGPUB; USPAT; USOCR	OR	ON	2012/05/09 14:13
S92	1	"5933141".pn.	US-PGPUB; USPAT; USOCR	OR	ON	2012/05/09 14:28
S93	1	"20090328122"	US-PGPUB; USPAT; USOCR	OR	ON	2012/05/09 15:05
S94	1	"20080261569"	US-PGPUB; USPAT;	OR	ON	2012/05/09 15:29

			USOCR			
S95	1	"7797226".pn.	US-PGPUB; USPAT; USOCR	OR	ON	2012/05/09 15:57
S96	1	"5347295".pn.	US-PGPUB; USPAT; USOCR	OR	ON	2012/05/10 13:54
S97	1	"5491495".pn.	US-PGPUB; USPAT; USOCR	OR	ON	2012/05/10 14:19
S98	1	"6954904".pn.	US-PGPUB; USPAT; USOCR	OR	ON	2012/05/10 18:16
S99	561	simics	US-PGPUB; USPAT; USOCR	OR	ON	2012/05/10 19:13
S100	1	simics and virtutech.as.	US-PGPUB; USPAT; USOCR	OR	ON	2012/05/10 19:13
S101	3	simics and "715"/$.ccls.	US-PGPUB; USPAT; USOCR	OR	ON	2012/05/10 19:13
S102	10	swipe with home near screen	US-PGPUB; USPAT; EPO; DERWENT; IBM_TDB	OR	ON	2012/09/11 15:10
S103	42	(gesture glide flick swipe) with home near screen	US-PGPUB; USPAT; EPO; DERWENT; IBM_TDB	OR	ON	2012/09/11 15:11
S104	0	(gesture glide flick swipe) with home near screen and @ay<="2002"	US-PGPUB; USPAT; EPO; DERWENT; IBM_TDB	OR	ON	2012/09/11 15:12
S105	99	(gesture glide flick swipe) with home and @ay<="2002"	US-PGPUB; USPAT; EPO; DERWENT; IBM_TDB	OR	ON	2012/09/11 15:12
S106	16	("5500935" | "5760773" | "20060267966" | "20050050476" | "20040021643" | "20050134578" | "5926178" | "20050190147").PN.	US-PGPUB; USPAT; EPO; DERWENT; IBM_TDB	OR	ON	2012/09/11 15:15
S107	453	activat$7 with home near3 (state screen)	US-PGPUB; USPAT; EPO; DERWENT; IBM_TDB	OR	ON	2012/09/11 15:21
S108	3	activat$7 with home near3 (state screen) with (gesture flick swipe finger glide)	US-PGPUB; USPAT; EPO; DERWENT; IBM_TDB	OR	ON	2012/09/11 15:21
S109	8615	activat$7 with (gesture flick swipe	US-PGPUB;	OR	ON	2012/09/11

		finger glide) and @ay<="2002"	USPAT; EPO; DERWENT; IBM_TDB			15:24
S110	50	activat$7 with (gesture flick swipe finger glide) with icon and @ay<="2002"	US-PGPUB; USPAT; EPO; DERWENT; IBM_TDB	OR	ON	2012/09/11 15:25
S111	5	("5345543" | "5347295" | "5386219" | "5398310" | "5404442").PN.	US-PGPUB; USPAT; USOCR	OR	ON	2012/09/11 15:33
S112	76	(start activat$7 switch) with (drag dragging slide sliding swiping gliding gesture flick swipe finger glide) with (home main idle start) near3 (screen page) and @ay<="2002"	US-PGPUB; USPAT; EPO; DERWENT; IBM_TDB	OR	ON	2012/09/11 15:40
S113	101	(start activat$7 switch) with (drag dragging slide sliding swiping gliding gesture flick swipe finger glide stroke) with (home main idle start) near3 (screen page) and @ay<="2002"	US-PGPUB; USPAT; EPO; DERWENT; IBM_TDB	OR	ON	2012/09/11 15:47
S114	2	"7657849".pn.	US-PGPUB; USPAT; EPO; DERWENT; IBM_TDB	OR	ON	2012/09/11 15:49
S115	47	("20010011308" | "20010012022" | "20020015024" | "20020196274" | "20030142138" | "20040030934" | "20040034801" | "20040085351" | "20040088568" | "20040230843" | "20040250138" | "20040260955" | "20040268267" | "20050050477" | "20050060554" | "20050079896" | "20050212760" | "20050216862" | "20050248542" | "20050253817" | "20050264833" | "20060174339" | "20060267955" | "20080034292" | "20080072172" | "5465084" | "5559961" | "5677710" | "5821933" | "5907327" | "6151208" | "6160555" | "6192478" | "6249606" | "6323846" | "6347290" | "6421453" | "6570557" | "6573883" | "6633310" | "6677932" | "6720860" | "6735695" | "7124433" | "7151843" | "7174462" | "7263670").PN.	US-PGPUB; USPAT; USOCR	OR	ON	2012/09/11 15:49
S116	0	(shortcut) with (drag dragging slide sliding swiping gliding gesture flick swipe finger glide stroke) with (home main idle start) near3 (screen page) and @ay<="2002"	US-PGPUB; USPAT; EPO; DERWENT; IBM_TDB	OR	ON	2012/09/11 15:56
S117	0	(short$cut) with (drag dragging slide sliding swiping gliding gesture flick swipe finger glide stroke) with (home main idle start) near3 (screen page) and @ay<="2002"	US-PGPUB; USPAT; EPO; DERWENT; IBM_TDB	OR	ON	2012/09/11 15:56
S118	114	(short$cut) with (drag dragging slide	US-PGPUB;	OR	ON	2012/09/11

		sliding swiping gliding gesture flick swipe finger glide stroke) and @ay<="2002"	USPAT; EPO; DERWENT; IBM_TDB			15:56
S119	2	"20080010294"	US-PGPUB; USPAT; EPO; DERWENT; IBM_TDB	OR	ON	2012/09/12 11:58
S120	766	(trend trending) with tag	US-PGPUB; USPAT; EPO; DERWENT; IBM_TDB	OR	ON	2012/09/12 12:05
S121	20	(trend trending) with tag and "715"/$.ccls.	US-PGPUB; USPAT; EPO; DERWENT; IBM_TDB	OR	ON	2012/09/12 12:05
S122	3	(trend trending) with tag same (alert notif$7 indicat$7) and "715"/$.ccls.	US-PGPUB; USPAT; EPO; DERWENT; IBM_TDB	OR	ON	2012/09/12 12:07
S123	2	"20090292723"	US-PGPUB; USPAT; EPO; DERWENT; IBM_TDB	OR	ON	2012/09/12 14:14
S124	3	"20080178067"	US-PGPUB; USPAT; EPO; DERWENT; IBM_TDB	OR	ON	2012/09/12 14:22
S125	107	"5276785"	US-PGPUB; USPAT; EPO; DERWENT; IBM_TDB	OR	ON	2012/09/13 12:24
S126	2	"5276785".pn.	US-PGPUB; USPAT; EPO; DERWENT; IBM_TDB	OR	ON	2012/09/13 12:24
S127	3	"20080040668"	US-PGPUB; USPAT; EPO; DERWENT; IBM_TDB	OR	ON	2012/09/13 12:59
S128	25	email with automatic with (greetin signature)	US-PGPUB; USPAT; EPO; DERWENT; IBM_TDB	OR	ON	2012/09/13 13:15
S129	59	email with automatic with (greeting signature)	US-PGPUB; USPAT; EPO; DERWENT; IBM_TDB	OR	ON	2012/09/13 13:18
S130	3	"20080040668"	US-PGPUB;	OR	ON	2012/09/13

			USPAT; EPO; DERWENT; IBM_TDB			13:35
S131	2	"20100191701"	US-PGPUB; USPAT; EPO; DERWENT; IBM_TDB	OR	ON	2012/09/13 13:35
S132	2	"20100191701"	US-PGPUB; USPAT; EPO; DERWENT; IBM_TDB	OR	ON	2012/09/13 13:41
S133	3	"20070263822"	US-PGPUB; USPAT; EPO; DERWENT; IBM_TDB	OR	ON	2012/09/13 14:56
S134	2	"20080082627"	US-PGPUB; USPAT; EPO; DERWENT; IBM_TDB	OR	ON	2012/09/13 15:31
S135	2	"20060149630"	US-PGPUB; USPAT; EPO; DERWENT; IBM_TDB	OR	ON	2012/09/13 15:31
S136	101	(start activat$7 switch launch) with (drag dragging slide sliding swiping gliding gesture flick swipe finger glide stroke) with (home main idle start) near3 (screen page) and @ay<="2002"	US-PGPUB; USPAT; EPO; DERWENT; IBM_TDB	OR	ON	2012/09/14 10:44
S137	364	(start activat$7 switch launch) with (drag dragging slide sliding swiping gliding gesture flick swipe glide stroke) with (icon) and @ay<="2002"	US-PGPUB; USPAT; EPO; DERWENT; IBM_TDB	OR	ON	2012/09/14 10:51
S138	2225	(start activat$7 switch launch) with (drag dragging slide sliding swiping gliding gesture flick swipe glide stroke) with (edge) and @ay<="2002"	US-PGPUB; USPAT; EPO; DERWENT; IBM_TDB	OR	ON	2012/09/14 10:58
S139	5	(start activat$7 switch launch) with (drag dragging slide sliding swiping gliding gesture flick swipe glide stroke) with (edge corner) near screen and @ay<="2002"	US-PGPUB; USPAT; EPO; DERWENT; IBM_TDB	OR	ON	2012/09/14 10:59
S140	11	(start activat$7 switch launch) with (drag dragging slide sliding swiping gliding gesture flick swipe glide stroke) with (edge corner) near3 screen and @ay<="2002"	US-PGPUB; USPAT; EPO; DERWENT; IBM_TDB	OR	ON	2012/09/14 11:00
S141	30	(start activat$7 switch launch) with (drag dragging slide sliding swiping gliding gesture flick swipe glide stroke) with (edge corner) and "715"/$.ccls. and @ay<="2002"	US-PGPUB; USPAT; EPO; DERWENT; IBM_TDB	OR	ON	2012/09/14 11:03

S142	16	("20020063696" | "20020109677" | "5644628" | "5745116" | "5943039" | "6037937" | "6310610" | "6618063").PN.	US-PGPUB; USPAT; EPO; DERWENT; IBM_TDB	OR	ON	2012/09/14 11:54
S143	2	("8127141").PN.	US-PGPUB; USPAT; EPO; DERWENT; IBM_TDB	OR	ON	2012/09/14 12:02
S144	2	swipe near gesture and @ay<="2002"	US-PGPUB; USPAT; EPO; DERWENT; IBM_TDB	OR	ON	2012/09/14 12:03
S145	1141	(start activat$7 switch launch) with (drag dragging slide sliding swiping gliding gesture flick swipe glide stroke) and "715"/$.ccls. and @ay<="2002"	US-PGPUB; USPAT; EPO; DERWENT; IBM_TDB	OR	ON	2012/09/14 12:10
S146	437	(activat$7 switch launch) with (slide sliding swiping gliding gesture flick swipe glide stroke) and "715"/$.ccls. and @ay<="2002"	US-PGPUB; USPAT; EPO; DERWENT; IBM_TDB	OR	ON	2012/09/14 12:10
S147	350	(activat$7 switch launch) with (slide sliding swiping gliding flick swipe glide stroke) and "715"/$.ccls. and @ay<="2002"	US-PGPUB; USPAT; EPO; DERWENT; IBM_TDB	OR	ON	2012/09/14 12:11
S148	206	(activat$7 switch launch) with (slide sliding swiping gliding flick swipe glide) and "715"/$.ccls. and @ay<="2002"	US-PGPUB; USPAT; EPO; DERWENT; IBM_TDB	OR	ON	2012/09/14 12:11
S149	56	(activat$7 switch launch) with (sliding swiping gliding flick swipe glide) and "715"/$.ccls. and @ay<="2002"	US-PGPUB; USPAT; EPO; DERWENT; IBM_TDB	OR	ON	2012/09/14 12:11
S150	0	(activat$7 switch launch) with (sliding swiping gliding flick swipe glide) same desk with accessories and "715"/$.ccls. and @ay<="2002"	US-PGPUB; USPAT; EPO; DERWENT; IBM_TDB	OR	ON	2012/09/14 15:31
S151	0	(activat$7 switch launch) with (sliding swiping gliding flick swipe glide) same desk with "accessories." and @ay<="2002"	US-PGPUB; USPAT; EPO; DERWENT; IBM_TDB	OR	ON	2012/09/14 15:31
S152	1	(activat$7 switch launch) with (sliding swiping gliding flick swipe glide) same desk with accessories and @ay<="2002"	US-PGPUB; USPAT; EPO; DERWENT; IBM_TDB	OR	ON	2012/09/14 15:31
S153	14905	"swipe!"	US-PGPUB; USPAT; EPO; DERWENT; IBM_TDB	OR	ON	2012/09/14 15:31

S154	0	"swipe" with DA	US-PGPUB; USPAT; EPO; DERWENT; IBM_TDB	OR	ON	2012/09/14 15:32
S155	0	"swipe" with Desk near accessor$6	US-PGPUB; USPAT; EPO; DERWENT; IBM_TDB	OR	ON	2012/09/14 15:32
S156	0	launch with desk near accessor$6	US-PGPUB; USPAT; EPO; DERWENT; IBM_TDB	OR	ON	2012/09/14 15:32
S157	0	shortcut with (sliding swiping gliding flick swipe glide) and "715"/$.ccls. and @ay<="2002"	US-PGPUB; USPAT; EPO; DERWENT; IBM_TDB	OR	ON	2012/09/14 15:33
S158	2	short$cut with (sliding swiping gliding flick swipe glide) and "715"/$.ccls. and @ay<="2002"	US-PGPUB; USPAT; EPO; DERWENT; IBM_TDB	OR	ON	2012/09/14 15:34
S159	1007	(home desktop) with (sliding swiping gliding flick swipe glide) and @ay<="2002"	US-PGPUB; USPAT; EPO; DERWENT; IBM_TDB	OR	ON	2012/09/17 12:55
S160	8	(home desktop) with (sliding swiping gliding flick swipe glide) and @ay<="2002" and "715"/$.ccls.	US-PGPUB; USPAT; EPO; DERWENT; IBM_TDB	OR	ON	2012/09/17 12:55
S161	0	(home desktop) with (sliding swiping gliding flick swipe glide) with (activat$6 launch short$cut) and @ay<="2002" and "715"/$.ccls.	US-PGPUB; USPAT; EPO; DERWENT; IBM_TDB	OR	ON	2012/09/17 13:31
S162	17	(home desktop) with (sliding swiping gliding flick swipe glide) with (activat$6 launch short$cut) and @ay<="2002"	US-PGPUB; USPAT; EPO; DERWENT; IBM_TDB	OR	ON	2012/09/17 13:31
S163	27	(sliding swiping gliding flick swipe glide) with (activat$6 launch short$cut) and @ay<="2002" and "715"/$.ccls.	US-PGPUB; USPAT; EPO; DERWENT; IBM_TDB	OR	ON	2012/09/17 13:32
S164	81	"5886697"	US-PGPUB; USPAT; EPO; DERWENT; IBM_TDB	OR	ON	2012/09/17 13:50
S165	2	"5886697".pn.	US-PGPUB; USPAT; EPO; DERWENT; IBM_TDB	OR	ON	2012/09/17 13:50

S166	19034809	(activat$7 switch launch) with (app application software icon) with "not" with (click tap)@ay<="2002"	US-PGPUB; USPAT; EPO; DERWENT; IBM_TDB	OR	ON	2012/09/17 14:46
S167	0	(activat$7 switch launch) with (app application software icon) with "not" with (click tap) and @ay<="2002"	US-PGPUB; USPAT; EPO; DERWENT; IBM_TDB	OR	ON	2012/09/17 14:46
S168	0	(activat$7 switch launch) with "not" with (click tap) and @ay<="2002"	US-PGPUB; USPAT; EPO; DERWENT; IBM_TDB	OR	ON	2012/09/17 14:46
S169	0	(activat$7 switch launch) with "not" with (click clicking tap tapping) and @ay<="2002"	US-PGPUB; USPAT; EPO; DERWENT; IBM_TDB	OR	ON	2012/09/17 14:46
S170	0	(activat$7 launch) with "not" with (click clicking tap tapping) and @ay<="2002"	US-PGPUB; USPAT; EPO; DERWENT; IBM_TDB	OR	ON	2012/09/17 14:47
S171	135	(activat$7 launch) with (alone "not" "without") with (click clicking tap tapping) and @ay<="2002"	US-PGPUB; USPAT; EPO; DERWENT; IBM_TDB	OR	ON	2012/09/17 14:47
S172	23	("20020087661" | "20030200505" | "5600778" | "5689667" | "5721853" | "5745116" | "5790115" | "5805167" | "6028271" | "6057844" | "6094197" | "6101498" | "6104400" | "6239803" | "6337698" | "6429846" | "6445383" | "6496206" | "6618063" | "6707443" | "6819345" | "6915489" | "7003734").PN.	US-PGPUB; USPAT; USOCR	OR	ON	2012/09/17 15:04
S173	16	("20020063696" | "20020109677" | "5745116" | "5943039" | "6037937" | "6310610" | "6618063" | "7199786").PN.	US-PGPUB; USPAT; EPO; DERWENT; IBM_TDB	OR	ON	2013/02/21 12:48
S174	2	"5406307".pn.	US-PGPUB; USPAT; EPO; DERWENT; IBM_TDB	OR	ON	2013/02/21 12:51
S175	166	(home) near (screen state) with transition	US-PGPUB; USPAT; EPO; DERWENT; IBM_TDB	OR	ON	2013/02/21 13:14
S176	31	(home) near (screen state) with transition and "715"/$.ccls.	US-PGPUB; USPAT; EPO; DERWENT; IBM_TDB	OR	ON	2013/02/21 13:27

S177	2	"8127141".pn.	US-PGPUB; USPAT; EPO; DERWENT; IBM_TDB	OR	ON	2013/02/21 13:30
S178	10	("20010009583" | "5465084" | "5588056" | "5699514" | "5928364" | "5991882" | "6212638" | "6253248" | "6574377" | "7219368").PN.	US-PGPUB; USPAT; USOCR	OR	ON	2013/02/21 13:31
S179	467	disable near touch	US-PGPUB; USPAT; USOCR	OR	ON	2013/02/21 13:33
S180	3422	"20080903"	US-PGPUB; USPAT; USOCR	OR	ON	2013/02/21 13:39
S181	3289	"20080903"	EPO	OR	ON	2013/02/21 13:39
S182	0	"200800903"	EPO	OR	ON	2013/02/21 13:39
S183	0	"200800903"	US-PGPUB; USPAT; EPO; IBM_TDB	OR	ON	2013/02/21 13:39
S184	0	"2007150842"	US-PGPUB; USPAT; EPO; IBM_TDB	OR	ON	2013/02/21 13:40
S185	2	"20070150842"	US-PGPUB; USPAT; EPO; IBM_TDB	OR	ON	2013/02/21 13:40
S186	0	"20050322549"	US-PGPUB; USPAT; EPO; IBM_TDB	OR	ON	2013/02/21 13:41
S187	0	"200500322549"	US-PGPUB; USPAT; EPO; IBM_TDB	OR	ON	2013/02/21 13:41
S188	0	"20050322549"	US-PGPUB; USPAT; EPO; DERWENT; IBM_TDB	OR	ON	2013/02/21 13:41
S189	34	"6392999"	US-PGPUB; USPAT; EPO; DERWENT; IBM_TDB	OR	ON	2013/02/21 13:46
S190	2	"6392999".pn.	US-PGPUB; USPAT; EPO; DERWENT; IBM_TDB	OR	ON	2013/02/21 13:46
S191	2	"5619555".pn.	US-PGPUB; USPAT; EPO; DERWENT;	OR	ON	2013/02/21 13:48

			IBM_TDB			
S192	69	"5644628"	US-PGPUB; USPAT; EPO; DERWENT; IBM_TDB	OR	ON	2013/02/21 13:49
S193	2	"5644628".pn.	US-PGPUB; USPAT; EPO; DERWENT; IBM_TDB	OR	ON	2013/02/21 13:49
S194	2	"5701340".pn.	US-PGPUB; USPAT; EPO; DERWENT; IBM_TDB	OR	ON	2013/02/21 13:49
S195	2	"6570557".pn.	US-PGPUB; USPAT; EPO; DERWENT; IBM_TDB	OR	ON	2013/02/21 13:50
S196	0	"67271932".pn.	US-PGPUB; USPAT; EPO; DERWENT; IBM_TDB	OR	ON	2013/02/21 13:57
S197	141	(UI GUI) with lock and "715"/$.ccls.	US-PGPUB; USPAT; EPO; DERWENT; IBM_TDB	OR	ON	2013/02/21 14:04
S198	34	(UI GUI) with lock and "715"/$.ccls. and @ay<="2002"	US-PGPUB; USPAT; EPO; DERWENT; IBM_TDB	OR	ON	2013/02/21 14:09
S199	147	(UI GUI screen) with lock and "715"/$.ccls. and @ay<="2002"	US-PGPUB; USPAT; EPO; DERWENT; IBM_TDB	OR	ON	2013/02/21 14:09
S200	6	(UI GUI screen) with (unlock lock) same (gesture slide glide swipe) and "715"/$.ccls. and @ay<="2002"	US-PGPUB; USPAT; EPO; DERWENT; IBM_TDB	OR	ON	2013/02/21 14:10
S201	11	(UI GUI screen state) with (home) same (gesture slide glide swipe) and "715"/$.ccls. and @ay<="2002"	US-PGPUB; USPAT; EPO; DERWENT; IBM_TDB	OR	ON	2013/02/21 14:15
S202	44	(UI GUI screen state) with (main home) same (gesture slide glide swipe) and "715"/$.ccls. and @ay<="2002"	US-PGPUB; USPAT; EPO; DERWENT; IBM_TDB	OR	ON	2013/02/21 14:15
S203	2	(UI GUI screen state) with (unlock) same (gesture slide glide swipe) and "715"/$.ccls. and @ay<="2002"	US-PGPUB; USPAT; EPO; DERWENT;	OR	ON	2013/02/21 14:23

			IBM_TDB			
S204	39	(UI GUI screen state) with (unlock) and "715"/$.ccls. and @ay<="2002"	US-PGPUB; USPAT; EPO; DERWENT; IBM_TDB	OR	ON	2013/02/21 14:27
S205	236	(UI GUI screen state) with (lock) and "715"/$.ccls. and @ay<="2002"	US-PGPUB; USPAT; EPO; DERWENT; IBM_TDB	OR	ON	2013/02/21 14:27
S206	0	(UI GUI screen state) with (lock) with remove and "715"/$.ccls. and @ay<="2002"	US-PGPUB; USPAT; EPO; DERWENT; IBM_TDB	OR	ON	2013/02/21 14:27
S207	236	(UI GUI screen state) with (lock) and "715"/$.ccls. and @ay<="2002"	US-PGPUB; USPAT; EPO; DERWENT; IBM_TDB	OR	ON	2013/02/21 14:27
S208	2	(UI GUI screen state) with (lock) with blank and "715"/$.ccls. and @ay<="2002"	US-PGPUB; USPAT; EPO; DERWENT; IBM_TDB	OR	ON	2013/02/21 14:28
S209	236	(UI GUI screen state) with (lock) and "715"/$.ccls. and @ay<="2002"	US-PGPUB; USPAT; EPO; DERWENT; IBM_TDB	OR	ON	2013/02/21 14:30
S210	2	"6812940".pn.	US-PGPUB; USPAT; EPO; DERWENT; IBM_TDB	OR	ON	2013/02/21 14:54
S211	3	("4825019" | "5825353" | "6408191").PN.	US-PGPUB; USPAT; USOCR	OR	ON	2013/02/21 14:54
S212	5	(unlock) same (gesture slide glide swipe) and "715"/$.ccls. and @ay<="2002"	US-PGPUB; USPAT; EPO; DERWENT; IBM_TDB	OR	ON	2013/02/21 15:02
S213	17	(unlock) same2 (gesture slide glide swipe) and "715"/$.ccls. and @ay<="2002"	US-PGPUB; USPAT; EPO; DERWENT; IBM_TDB	OR	ON	2013/02/21 15:03
S214	32	(log$in) same2 (gesture slide glide swipe) and "715"/$.ccls. and @ay<="2002"	US-PGPUB; USPAT; EPO; DERWENT; IBM_TDB	OR	ON	2013/02/21 15:05
S215	2	(log$in) with (gesture slide glide swipe) and "715"/$.ccls. and @ay<="2002"	US-PGPUB; USPAT; EPO; DERWENT; IBM_TDB	OR	ON	2013/02/21 15:05

S216	93768	(log$in) with2 (gesture slide glide swipe) and "715"/$.ccls. and @ay<="2002"	US-PGPUB; USPAT; EPO; DERWENT; IBM_TDB	OR	ON	2013/02/21 15:06
S217	10	(log$in) same (gesture slide glide swipe) and "715"/$.ccls. and @ay<="2002"	US-PGPUB; USPAT; EPO; DERWENT; IBM_TDB	OR	ON	2013/02/21 15:06
S218	519381	grid (gesture slide glide swipe) and "715"/$.ccls. and @ay<="2002"	US-PGPUB; USPAT; EPO; DERWENT; IBM_TDB	OR	ON	2013/02/21 15:08
S219	15	grid with (gesture slide glide swipe) and "715"/$.ccls. and @ay<="2002"	US-PGPUB; USPAT; EPO; DERWENT; IBM_TDB	OR	ON	2013/02/21 15:08
S220	10198	expan$7 with vertical with horizontal	US-PGPUB; USPAT; EPO; DERWENT; IBM_TDB	OR	ON	2013/02/22 11:06
S221	13124	expan$7 with vertical$4 with horizontal$4	US-PGPUB; USPAT; EPO; DERWENT; IBM_TDB	OR	ON	2013/02/22 11:06
S222	250	expan$7 with vertical$4 with horizontal$4 and "715"/$.ccls.	US-PGPUB; USPAT; EPO; DERWENT; IBM_TDB	OR	ON	2013/02/22 11:06
S223	2	expan$7 with vertical$4 with horizontal$4 with toggle and "715"/$.ccls.	US-PGPUB; USPAT; EPO; DERWENT; IBM_TDB	OR	ON	2013/02/22 11:12
S224	3	expan$7 with vertical$4 with horizontal$4 with (switch toggle) and "715"/$.ccls.	US-PGPUB; USPAT; EPO; DERWENT; IBM_TDB	OR	ON	2013/02/22 11:14
S225	14	menu with vertical$4 with horizontal$4 with (switch toggle) and "715"/$.ccls.	US-PGPUB; USPAT; EPO; DERWENT; IBM_TDB	OR	ON	2013/02/22 11:15
S226	2	menu with inline with (switch toggle) and "715"/$.ccls.	US-PGPUB; USPAT; EPO; DERWENT; IBM_TDB	OR	ON	2013/02/22 11:21
S227	1	(pop$out side) with inline with (switch toggle) and "715"/$.ccls.	US-PGPUB; USPAT; EPO; DERWENT; IBM_TDB	OR	ON	2013/02/22 11:22

S228	1	(pop$out side) with inline with (switch toggle orientation) and "715"/$.ccls.	US-PGPUB; USPAT; EPO; DERWENT; IBM_TDB	OR	ON	2013/02/22 11:22
S229	12	(pop$out side) with expan$7 with (switch toggle orientation) and "715"/$.ccls.	US-PGPUB; USPAT; EPO; DERWENT; IBM_TDB	OR	ON	2013/02/22 11:24
S230	18	(horizontal vertical side) with expan$7 with (switch toggle orientation) and "715"/$.ccls.	US-PGPUB; USPAT; EPO; DERWENT; IBM_TDB	OR	ON	2013/02/22 11:25
S231	24	(horizontal$ vertical$ side) with expan$7 with (switch toggle orientation) and "715"/$.ccls.	US-PGPUB; USPAT; EPO; DERWENT; IBM_TDB	OR	ON	2013/02/22 11:25
S232	6	("2005/0149873").URPN.	USPAT	OR	ON	2013/02/22 11:26
S233	1	pitaro.xa,xp. and expan$7 with horizont$7	USPAT	OR	ON	2013/02/22 11:28
S234	68	pitaro.xa,xp. and expan$7	USPAT	OR	ON	2013/02/22 11:29
S235	34	pitaro.xa,xp. and (tree hiearch$6)	USPAT	OR	ON	2013/02/22 11:36
S236	36	pitaro.xa,xp. and horizont$5 with vertical$6	USPAT	OR	ON	2013/02/22 11:38
S237	36	tree same horizont$7 with vertical$7 with expan$7	USPAT	OR	ON	2013/02/22 11:40
S238	64	tree same horizont$7 with vertical$7 with expan$7	US-PGPUB; USPAT; DERWENT; IBM_TDB	OR	ON	2013/02/22 11:40
S239	16	tree same horizont$7 with vertical$7 with expan$7 and "715"/$.ccls.	US-PGPUB; USPAT; DERWENT; IBM_TDB	OR	ON	2013/02/22 11:41
S240	3	Pitaro.xa,xp. and pivot	US-PGPUB; USPAT; DERWENT; IBM_TDB	OR	ON	2013/02/22 11:41
S241	2124	(hierach$8 tree) with pivot	US-PGPUB; USPAT; DERWENT; IBM_TDB	OR	ON	2013/02/22 11:42
S242	8	(hierach$8 tree) with pivot and "715"/$.ccls.	US-PGPUB; USPAT; DERWENT; IBM_TDB	OR	ON	2013/02/22 11:42
S243	196	(hierach$8 tree) and pivot and "715"/$.ccls.	US-PGPUB; USPAT; DERWENT; IBM_TDB	OR	ON	2013/02/22 11:44
S244	28	(hierach$8 tree) and pivot near point and "715"/$.ccls.	US-PGPUB; USPAT;	OR	ON	2013/02/22 11:44

			DERWENT; IBM_TDB			
S245	3	(propagat$ interpolat$6 infer$8) with keyframes with (intermediate middle) and "715"/$.ccls.	US-PGPUB; USPAT; DERWENT; IBM_TDB	OR	ON	2013/02/22 11:51
S246	3	(propagat$ interpolat$6 infer$8) with key$frames with (intermediate middle) and "715"/$.ccls.	US-PGPUB; USPAT; DERWENT; IBM_TDB	OR	ON	2013/02/22 11:52
S247	13	(propagat$ interpolat$6 infer$8) with (((r representative key) near frame) key$frames) with (intermediate middle) and "715"/$.ccls.	US-PGPUB; USPAT; DERWENT; IBM_TDB	OR	ON	2013/02/22 11:53
S248	54	overlap$7 with window with resize	US-PGPUB; USPAT; DERWENT; IBM_TDB	OR	ON	2013/02/22 12:02
S249	0	overlap$7 with window with resize same threshold	US-PGPUB; USPAT; DERWENT; IBM_TDB	OR	ON	2013/02/22 12:02
S250	133	overlap$7 with (object element window) with (size resize) same threshold	US-PGPUB; USPAT; DERWENT; IBM_TDB	OR	ON	2013/02/22 12:02
S251	11	overlap$7 with (object element window) with (size resize) same threshold and "715"/$.ccls.	US-PGPUB; USPAT; DERWENT; IBM_TDB	OR	ON	2013/02/22 12:04
S252	3	overlap$7 with (object element window) with (overlap$6) near2 threshold and "715"/$.ccls.	US-PGPUB; USPAT; DERWENT; IBM_TDB	OR	ON	2013/02/22 12:15
S253	3	(object element window) with (overlap$6) near2 threshold and "715"/$.ccls.	US-PGPUB; USPAT; DERWENT; IBM_TDB	OR	ON	2013/02/22 12:15
S254	139	grid with application with icons	US-PGPUB; USPAT; DERWENT; IBM_TDB	OR	ON	2013/02/22 12:23
S255	0	grid with application with icons and "7156"/$.ccls.	US-PGPUB; USPAT; DERWENT; IBM_TDB	OR	ON	2013/02/22 12:23
S256	54	grid with application with icons and "715"/$.ccls.	US-PGPUB; USPAT; DERWENT; IBM_TDB	OR	ON	2013/02/22 12:23
S257	2	"20060041848"	US-PGPUB; USPAT; DERWENT; IBM_TDB	OR	ON	2013/02/22 13:41
S258	3	"20050039137"	US-PGPUB; USPAT; DERWENT; IBM_TDB	OR	ON	2013/02/22 13:42

S259	2	"20020015064".pn.	US-PGPUB; USPAT; DERWENT; IBM_TDB	OR	ON	2013/02/24 21:32
S260	2	"20020015064"	US-PGPUB; USPAT; DERWENT; IBM_TDB	OR	ON	2013/02/24 21:33
S261	817	(swipe) near gesture	US-PGPUB; USPAT; DERWENT; IBM_TDB	OR	ON	2013/02/24 21:49
S262	390	(swipe) near gesture and "715"/$.ccls.	US-PGPUB; USPAT; DERWENT; IBM_TDB	OR	ON	2013/02/24 21:49
S263	2	(swipe) near gesture and "715"/$.ccls. and @ay<="2002"	US-PGPUB; USPAT; DERWENT; IBM_TDB	OR	ON	2013/02/24 21:49
S264	5	(swipe slide glide) near gesture and "715"/$.ccls. and @ay<="2002"	US-PGPUB; USPAT; DERWENT; IBM_TDB	OR	ON	2013/02/24 21:51
S265	6	(swipe slide glide) near3 gesture and "715"/$.ccls. and @ay<="2002"	US-PGPUB; USPAT; DERWENT; IBM_TDB	OR	ON	2013/02/24 21:52
S266	16	(swipe slide glide) with gesture and "715"/$.ccls. and @ay<="2002"	US-PGPUB; USPAT; DERWENT; IBM_TDB	OR	ON	2013/02/24 21:52
S267	0	(swipe slide glide) with away with icon and "715"/$.ccls. and @ay<="2002"	US-PGPUB; USPAT; DERWENT; IBM_TDB	OR	ON	2013/02/24 21:56
S268	26793	application with icon	US-PGPUB; USPAT; EPO; DERWENT; IBM_TDB	OR	ON	2013/02/24 22:13
S269	1722	application with icon with bar	US-PGPUB; USPAT; EPO; DERWENT; IBM_TDB	OR	ON	2013/02/24 22:13
S270	657	application with icon with bar and "715"/$.ccls.	US-PGPUB; USPAT; EPO; DERWENT; IBM_TDB	OR	ON	2013/02/24 22:13
S271	183	application with icon with bar and "715"/$.ccls. and @ay<="2002"	US-PGPUB; USPAT; EPO; DERWENT; IBM_TDB	OR	ON	2013/02/24 22:14
S272	62	lock with path and "715"/$.ccls.	US-PGPUB; USPAT; EPO;	OR	ON	2013/02/24 22:15

			DERWENT; IBM_TDB			
S273	0	lock with path with trace and "715"/$.ccls.	US-PGPUB; USPAT; EPO; DERWENT; IBM_TDB	OR	ON	2013/02/24 22:18
S274	1	(unlock lock) with path with trace and "715"/$.ccls.	US-PGPUB; USPAT; EPO; DERWENT; IBM_TDB	OR	ON	2013/02/24 22:18
S275	12	(unlock lock) with trace and "715"/$.ccls.	US-PGPUB; USPAT; EPO; DERWENT; IBM_TDB	OR	ON	2013/02/24 22:20
S276	2	"5559961".pn.	US-PGPUB; USPAT; EPO; DERWENT; IBM_TDB	OR	ON	2013/02/24 22:30
S277	252	graphical near password	US-PGPUB; USPAT; EPO; DERWENT; IBM_TDB	OR	ON	2013/02/24 22:30
S278	37	graphical near password and "715"/$.ccls.	US-PGPUB; USPAT; EPO; DERWENT; IBM_TDB	OR	ON	2013/02/24 22:30
S279	13	graphical near password and "715"/$.ccls. and @ay<="2002"	US-PGPUB; USPAT; EPO; DERWENT; IBM_TDB	OR	ON	2013/02/24 22:31
S280	81	("5559961").URPN.	USPAT	OR	ON	2013/02/24 22:34
S281	10	("20020029341" | "20040085351" | "20040245352" | "5406307" | "5559961" | "5796183" | "6209104" | "6476797" | "6720860" | "6862687").PN.	US-PGPUB; USPAT; USOCR	OR	ON	2013/02/24 22:41
S282	1	"7818691".pn.	US-PGPUB; USPAT; USOCR	OR	ON	2013/02/24 22:49
S283	114	main near menu with bar and "715"/$.ccls. and @ay<="2002"	US-PGPUB; USPAT; EPO; DERWENT; IBM_TDB	OR	ON	2013/02/25 10:39
S284	0	main near menu with bar and "715"/864.ccls. and @ay<="2002"	US-PGPUB; USPAT; EPO; DERWENT; IBM_TDB	OR	ON	2013/02/25 10:42
S285	85	bar and "715"/864.ccls. and @ay<="2002"	US-PGPUB; USPAT;	OR	ON	2013/02/25 10:42

			EPO; DERWENT; IBM_TDB			
S286	146	mode and "715"/864.ccls. and @ay<="2002"	US-PGPUB; USPAT; EPO; DERWENT; IBM_TDB	OR	ON	2013/02/25 10:44
S287	0	"13345383"	USPAT	OR	OFF	2013/07/23 11:15
S288	646	threshold with distance with edge	USPAT	OR	OFF	2013/07/23 11:18
S289	24	threshold with distance with edge and "715"/$.ccls.	USPAT	OR	OFF	2013/07/23 11:18
S290	61	threshold with distance with edge and "715"/$.ccls.	US-PGPUB; USPAT; USOCR; EPO; DERWENT	OR	OFF	2013/07/23 11:19
S291	2	threshold with distance near second with edge and "715"/$.ccls.	US-PGPUB; USPAT; USOCR; EPO; DERWENT	OR	OFF	2013/07/23 11:21
S292	5	threshold with distance near2 second with edge and "715"/$.ccls.	US-PGPUB; USPAT; USOCR; EPO; DERWENT	OR	OFF	2013/07/23 11:22
S293	2	"7665043".pn.	US-PGPUB; USPAT; USOCR; EPO; DERWENT	OR	OFF	2013/07/23 11:41
S294	16	("5785439" | "5821930" | "5898434" | "6304261" | "6646633" | "7304638").PN.	US-PGPUB; USPAT; USOCR; EPO; DERWENT	OR	OFF	2013/07/23 11:44
S295	1	"20060156256"	USPAT	OR	OFF	2013/07/23 12:32
S296	1	"20050079896"	USPAT	OR	OFF	2013/07/23 12:33
S297	1	"5406307".PN.	USPAT	OR	OFF	2013/07/23 14:31
S298	1	"7665043".pn.	USPAT	OR	OFF	2013/07/23 14:49

7/23/2013 5:29:46 PM
C:\Users\rpitaro\Documents\EAST\Workspaces\13310755.wsp

Index of Claims	Application/Control No.	Applicant(s)/Patent Under Reexamination
	13310755	GOERTZ, MAGNUS
	Examiner	Art Unit
	RYAN PITARO	2171

✓	Rejected	-	Cancelled	N	Non-Elected	A	Appeal
=	Allowed	÷	Restricted	I	Interference	O	Objected

☐ Claims renumbered in the same order as presented by applicant ☐ CPA ☐ T.D. ☐ R.1.47

CLAIM		DATE								
Final	Original	05/03/2012	09/17/2012	02/25/2013	07/23/2013					
	1	-	-	-	-					
	2	-	-	-	-					
	3	-	-	-	-					
	4	-	-	-	-					
	5	-	-	-	-					
	6	-	-	-	-					
	7	-	-	-	-					
	8	-	-	-	-					
	9	-	-	-	-					
	10	-	-	-	-					
	11	-	-	-	-					
	12	-	-	-	-					
	13	-	-	-	-					
	14	-	-	-	-					
	15	-	-	-	-					
	16	-	-	-	-					
	17	-	-	-	-					
	18	-	-	-	-					
	19	✓	N	N	N					
	20	✓	N	N	N					
	21	✓	✓	✓	✓					
	22	✓	-	-	-					
	23	✓	-	-	-					
	24	✓	-	-	-					
	25	✓	-	-	-					
	26	✓	-	-	-					
	27	✓	-	-	-					
	28	✓	N	N	N					
	29	✓	N	N	N					
	30	✓	N	N	N					
	31	✓	N	N	N					
	32	✓	N	N	N					
	33	✓	N	N	N					
	34	✓	N	N	N					
	35	✓	N	N	N					
	36	✓	N	N	N					

Index of Claims	Application/Control No.	Applicant(s)/Patent Under Reexamination
	13310755	GOERTZ, MAGNUS
	Examiner	Art Unit
	RYAN PITARO	2171

✓	Rejected	-	Cancelled	N	Non-Elected	A	Appeal
=	Allowed	÷	Restricted	I	Interference	O	Objected

☐ Claims renumbered in the same order as presented by applicant ☐ CPA ☐ T.D. ☐ R.1.47

CLAIM		DATE								
Final	Original	05/03/2012	09/17/2012	02/25/2013	07/23/2013					
	37		✓	✓	✓					
	38		✓	-	-					
	39		✓	✓	✓					
	40		✓	✓	✓					
	41		✓	✓	✓					
	42		✓	✓	✓					
	43				✓					
	44				✓					
	45				✓					

Attorney's Docket No.: NEONODE.P039 *PATENT*

IN THE UNITED STATES PATENT AND TRADEMARK OFFICE

In Re Patent Application of:	)	
	)	Examiner: Ryan F. Pitaro
Magnus Goertz	)	
	)	Art Unit: 2171
Application No: 13/310,755	)	
	)	
Filed: December 4, 2011	)	
	)	
For: USER INTERFACE	)	
	)	

Mail Stop AMENDMENT
Commissioner for Patents
P. O. Box 1450
Alexandria, VA 22313-1450

SUPPLEMENTAL AMENDMENT

Further to applicant's amendment filed on May 3, 2013, applicant respectfully requests that the above-identified application be further amended as follows.

IN THE CLAIMS:

Please substitute the following claims for the claims with the same number.

1. – **18.** (canceled)

19. (withdrawn) A non-transitory computer readable medium storing computer program code which, when executed by a mobile handheld device that has a touch sensitive display, instructs the device (i) to display a notification of an incoming phone call, and (ii) to accept the call in response to a multi-step operation comprising an object touching the touch sensitive display, and the object gliding along the touch sensitive display in a specific direction.

20. (withdrawn) The computer readable medium of claim **19**, wherein the program code instructs the device (iii) to disconnect the call in response to a multi-step operation comprising an object touching the touch sensitive area, and the object gliding the object along the touch sensitive display in a direction opposite to the specific direction.

21. (currently amended) A non-transitory computer readable medium storing instructions, which, when executed by a processor of an electronic device having a touch-sensitive surface, cause the processor to enable a user interface of the device, the user interface comprising at least two states, namely, (a) a tap-present state, wherein a plurality of tap-activatable icons for a respective plurality of pre-designated system functions are present, each system function being activated in response to a tap on its respective icon, and (b) a tap-absent state, wherein tap-activatable icons are absent but an otherwise-activatable graphic is

present for transitioning the user interface from the tap-absent state to the tap-present state in response to a multi-step user gesture comprising (i) an object touching the touch sensitive surface at a location where the otherwise-activatable graphic is provided, and (ii) the object gliding along the touch sensitive surface away from the touched location.

22. – **27.** (canceled)

28. (withdrawn) A computer readable medium storing computer program code, which, when executed by a mobile handheld device having a touch sensitive display, instructs the device (i) to display a list of files of a first type, and (ii) to change the list to display files of a second type in response to a tap on the display.

29. (withdrawn) The computer readable medium of claim **28**, wherein the computer program code instructs the device to (iii) display a representation of a file type, and wherein the device changes the list in response to a tap on the representation of the file type.

30. (withdrawn) The computer readable medium of claim **28**, wherein the files of the first type are data files, and the files of the second type are application files.

31. (withdrawn) A computer readable medium storing computer program code, which, when executed by a mobile handheld device that has a touch sensitive display, instructs the device to (i) to display a data input keypad for a user to enter data, and to display a text field for entered data, (ii) to display representations of a plurality of applications, and (iii) to activate

one of the applications and to have the application use the entered data, in response to a tap on its representation.

32. (withdrawn) The computer readable medium of claim **31**, wherein the plurality of applications includes a telephone application that uses the entered data as a telephone number.

33. (withdrawn) The computer readable medium of claim **31**, wherein the plurality of applications includes a text messaging application that uses the entered data as a text message.

34. (withdrawn) The computer readable medium of claim **33**, wherein the text messaging application is a short messaging service (SMS) application.

35. (withdrawn) The computer readable medium of claim **33**, wherein the text messaging application is an e-mail application.

36. (withdrawn) The computer readable medium of claim **31**, wherein the plurality of applications includes a contact list application that stores the entered data as retrievable contact information.

37. (previously presented) The computer readable medium of claim **21**, wherein any state transition elicited by a user gesture that begins at a location at which the otherwise-activatable graphic is provided, transitions to the tap-present state.

38. (canceled)

39. (previously presented) The computer readable medium of claim **21**, wherein the tap-present state does not display the tap-activatable icons within a window frame.

40. (previously presented) The computer readable medium of claim **21**, wherein the plurality of pre-designated system functions comprises a help function.

41. (previously presented) The computer readable medium of claim **21**, wherein the plurality of pre-designated system functions comprises a clock function.

42. (previously presented) The computer readable medium of claim **21**, wherein the plurality of pre-designated system functions comprises an alarm function.

43. (previously presented) The computer readable medium of claim **21**, wherein a description of the multi-step user gesture is publicly available.

44. (previously presented) The computer readable medium of claim **21**, wherein the multi-step user gesture does not require non-public knowledge.

45. (previously presented) The computer readable medium of claim **21**, wherein the multi-step user gesture does not involve a user-specific password or passcode.

REMARKS

Applicant has amended claim **21** to include the text -- having a touch-sensitive surface -- , which was inadvertently omitted from the amendment filed on May 3, 2013. Claims **21**, **37** and **39** – **45** are presented for examination.

If any matters can be resolved by telephone, applicant requests that the Patent and Trademark Office please contact applicant's representative at the telephone number listed below.

Respectfully submitted,

SOQUEL GROUP LLC

Dated: May 5, 2013

/Marc A. Berger/
Marc A. Berger
Reg. No. 44,029

P.O. Box 691
Soquel, CA 95073
(831) 426-8200
Customer No. 75660

Electronic Acknowledgement Receipt

EFS ID:	15692499
Application Number:	13310755
International Application Number:	
Confirmation Number:	1066
Title of Invention:	USER INTERFACE
First Named Inventor/Applicant Name:	Magnus Goertz
Customer Number:	75660
Filer:	Marc Aron Berger
Filer Authorized By:	
Attorney Docket Number:	NEONODE.P039
Receipt Date:	05-MAY-2013
Filing Date:	04-DEC-2011
Time Stamp:	03:29:25
Application Type:	Utility under 35 USC 111(a)

Payment information:

Submitted with Payment	no

File Listing:

Document Number	Document Description	File Name	File Size(Bytes)/ Message Digest	Multi Part /.zip	Pages (if appl.)
1		NEONODE-P039_SupplementalAmendment_05-05-2013.pdf	71477 aff78c54c33ac1e532641d335138ab4930f103aa	yes	6

	Multipart Description/PDF files in .zip description		
	Document Description	**Start**	**End**
	Supplemental Response or Supplemental Amendment	1	1
	Claims	2	5
	Applicant Arguments/Remarks Made in an Amendment	6	6
Warnings:			
Information:			
	Total Files Size (in bytes):	71477	

This Acknowledgement Receipt evidences receipt on the noted date by the USPTO of the indicated documents, characterized by the applicant, and including page counts, where applicable. It serves as evidence of receipt similar to a Post Card, as described in MPEP 503.

New Applications Under 35 U.S.C. 111
If a new application is being filed and the application includes the necessary components for a filing date (see 37 CFR 1.53(b)-(d) and MPEP 506), a Filing Receipt (37 CFR 1.54) will be issued in due course and the date shown on this Acknowledgement Receipt will establish the filing date of the application.

National Stage of an International Application under 35 U.S.C. 371
If a timely submission to enter the national stage of an international application is compliant with the conditions of 35 U.S.C. 371 and other applicable requirements a Form PCT/DO/EO/903 indicating acceptance of the application as a national stage submission under 35 U.S.C. 371 will be issued in addition to the Filing Receipt, in due course.

New International Application Filed with the USPTO as a Receiving Office
If a new international application is being filed and the international application includes the necessary components for an international filing date (see PCT Article 11 and MPEP 1810), a Notification of the International Application Number and of the International Filing Date (Form PCT/RO/105) will be issued in due course, subject to prescriptions concerning national security, and the date shown on this Acknowledgement Receipt will establish the international filing date of the application.

PTO/SB/06 (09-11)
Approved for use through 1/31/2014. OMB 0651-0032
U.S. Patent and Trademark Office; U.S. DEPARTMENT OF COMMERCE
Under the Paperwork Reduction Act of 1995, no persons are required to respond to a collection of information unless it displays a valid OMB control number.

PATENT APPLICATION FEE DETERMINATION RECORD Substitute for Form PTO-875	Application or Docket Number 13/310,755	Filing Date 12/04/2011	☐ To be Mailed

ENTITY: ☒ LARGE ☐ SMALL ☐ MICRO

APPLICATION AS FILED – PART I

	(Column 1)	(Column 2)		
FOR	NUMBER FILED	NUMBER EXTRA	RATE ($)	FEE ($)
☐ BASIC FEE (37 CFR 1.16(a), (b), or (c))	N/A	N/A	N/A	
☐ SEARCH FEE (37 CFR 1.16(k), (i), or (m))	N/A	N/A	N/A	
☐ EXAMINATION FEE (37 CFR 1.16(o), (p), or (q))	N/A	N/A	N/A	
TOTAL CLAIMS (37 CFR 1.16(i))	minus 20 =	*	X $ =	
INDEPENDENT CLAIMS (37 CFR 1.16(h))	minus 3 =	*	X $ =	
☐ APPLICATION SIZE FEE (37 CFR 1.16(s))	If the specification and drawings exceed 100 sheets of paper, the application size fee due is $310 ($155 for small entity) for each additional 50 sheets or fraction thereof. See 35 U.S.C. 41(a)(1)(G) and 37 CFR 1.16(s).			
☐ MULTIPLE DEPENDENT CLAIM PRESENT (37 CFR 1.16(j))				
* If the difference in column 1 is less than zero, enter "0" in column 2.			TOTAL	

APPLICATION AS AMENDED – PART II

AMENDMENT	05/05/2013	(Column 1) CLAIMS REMAINING AFTER AMENDMENT		(Column 2) HIGHEST NUMBER PREVIOUSLY PAID FOR	(Column 3) PRESENT EXTRA	RATE ($)	ADDITIONAL FEE ($)
	Total (37 CFR 1.16(i))	* 20	Minus	** 20	= 0	X $80 =	0
	Independent (37 CFR 1.16(h))	* 4	Minus	***4	= 0	X $420 =	0
	☐ Application Size Fee (37 CFR 1.16(s))						
	☐ FIRST PRESENTATION OF MULTIPLE DEPENDENT CLAIM (37 CFR 1.16(j))						
						TOTAL ADD'L FEE	0

AMENDMENT		(Column 1) CLAIMS REMAINING AFTER AMENDMENT		(Column 2) HIGHEST NUMBER PREVIOUSLY PAID FOR	(Column 3) PRESENT EXTRA	RATE ($)	ADDITIONAL FEE ($)
	Total (37 CFR 1.16(i))	*	Minus	**	=	X $ =	
	Independent (37 CFR 1.16(h))	*	Minus	***	=	X $ =	
	☐ Application Size Fee (37 CFR 1.16(s))						
	☐ FIRST PRESENTATION OF MULTIPLE DEPENDENT CLAIM (37 CFR 1.16(j))						
						TOTAL ADD'L FEE	

* If the entry in column 1 is less than the entry in column 2, write "0" in column 3.
** If the "Highest Number Previously Paid For" IN THIS SPACE is less than 20, enter "20".
*** If the "Highest Number Previously Paid For" IN THIS SPACE is less than 3, enter "3".
The "Highest Number Previously Paid For" (Total or Independent) is the highest number found in the appropriate box in column 1.

LIE
/DONNA 1. SMALLS LOGAN/

This collection of information is required by 37 CFR 1.16. The information is required to obtain or retain a benefit by the public which is to file (and by the USPTO to process) an application. Confidentiality is governed by 35 U.S.C. 122 and 37 CFR 1.14. This collection is estimated to take 12 minutes to complete, including gathering, preparing, and submitting the completed application form to the USPTO. Time will vary depending upon the individual case. Any comments on the amount of time you require to complete this form and/or suggestions for reducing this burden, should be sent to the Chief Information Officer, U.S. Patent and Trademark Office, U.S. Department of Commerce, P.O. Box 1450, Alexandria, VA 22313-1450. DO NOT SEND FEES OR COMPLETED FORMS TO THIS ADDRESS. **SEND TO: Commissioner for Patents, P.O. Box 1450, Alexandria, VA 22313-1450.**
If you need assistance in completing the form, call 1-800-PTO-9199 and select option 2.

Attorney's Docket No.: NEONODE.P039 *PATENT*

IN THE UNITED STATES PATENT AND TRADEMARK OFFICE

In Re Patent Application of:	)	
	)	Examiner: Ryan F. Pitaro
Magnus Goertz	)	
	)	Art Unit: 2171
Application No: 13/310,755	)	
	)	
Filed: December 4, 2011	)	
	)	
For: USER INTERFACE	)	
	)	

Mail Stop AMENDMENT
Commissioner for Patents
P. O. Box 1450
Alexandria, VA 22313-1450

AMENDMENT AND RESPONSE TO OFFICE ACTION

UNDER 37 C.F.R. §1.111

In response to the Office action dated March 4, 2013 (the "Office Action") and pursuant to 37 C.F.R. §1.111, applicant respectfully requests that the above-identified application be amended as follows.

IN THE CLAIMS:

Please substitute the following claims for the claims with the same number.

1. – **18.** (canceled)

19. (withdrawn) A non-transitory computer readable medium storing computer program code which, when executed by a mobile handheld device that has a touch sensitive display, instructs the device (i) to display a notification of an incoming phone call, and (ii) to accept the call in response to a multi-step operation comprising an object touching the touch sensitive display, and the object gliding along the touch sensitive display in a specific direction.

20. (withdrawn) The computer readable medium of claim **19**, wherein the program code instructs the device (iii) to disconnect the call in response to a multi-step operation comprising an object touching the touch sensitive area, and the object gliding the object along the touch sensitive display in a direction opposite to the specific direction.

21. (currently amended) A non-transitory computer readable medium storing instructions, which, when executed by a processor of an electronic device, cause the processor to enable a user interface of the device, the user interface comprising at least two states, namely, (a) a [[home]] tap-present ~~state comprising~~ state, wherein a plurality of tap-activatable icons for a respective plurality of pre-designated system functions are present, each system function being activated in response to a tap on its respective icon, and (b) a ~~tap-disabled~~ tap-absent state, wherein tap-activatable icons are absent but an otherwise-activatable

graphic is present~~, comprising a touch sensitive area in which is provided a graphic~~ for transitioning the user interface from the ~~tap-disabled~~ tap-absent state to the [[home]] tap-present state in response to a multi-step user gesture comprising (i) an object touching the touch sensitive [[area]] surface at a location where the otherwise-activatable graphic is provided, and (ii) the object gliding along the touch sensitive [[area]] surface away from the touched location.

22. – **27.** (canceled)

28. (withdrawn) A computer readable medium storing computer program code, which, when executed by a mobile handheld device having a touch sensitive display, instructs the device (i) to display a list of files of a first type, and (ii) to change the list to display files of a second type in response to a tap on the display.

29. (withdrawn) The computer readable medium of claim **28**, wherein the computer program code instructs the device to (iii) display a representation of a file type, and wherein the device changes the list in response to a tap on the representation of the file type.

30. (withdrawn) The computer readable medium of claim **28**, wherein the files of the first type are data files, and the files of the second type are application files.

31. (withdrawn) A computer readable medium storing computer program code, which, when executed by a mobile handheld device that has a touch sensitive display, instructs the device to (i) to display a data input keypad for a user to enter data, and to display a text field for entered data, (ii) to

display representations of a plurality of applications, and (iii) to activate one of the applications and to have the application use the entered data, in response to a tap on its representation.

32. (withdrawn) The computer readable medium of claim **31**, wherein the plurality of applications includes a telephone application that uses the entered data as a telephone number.

33. (withdrawn) The computer readable medium of claim **31**, wherein the plurality of applications includes a text messaging application that uses the entered data as a text message.

34. (withdrawn) The computer readable medium of claim **33**, wherein the text messaging application is a short messaging service (SMS) application.

35. (withdrawn) The computer readable medium of claim **33**, wherein the text messaging application is an e-mail application.

36. (withdrawn) The computer readable medium of claim **31**, wherein the plurality of applications includes a contact list application that stores the entered data as retrievable contact information.

37. (currently amended) The computer readable medium of claim **21**, wherein any state transition elicited by a user gesture that begins at a location at which the <u>otherwise-activatable</u> graphic is provided, transitions to the [[home]] <u>tap-present</u> state.

38. (canceled)

39. (currently amended) The computer readable medium of claim **21**, wherein the [[home]] tap-present state does not display the tap-activatable icons within a window frame.

40. (previously presented) The computer readable medium of claim **21**, wherein the plurality of pre-designated system functions comprises a help function.

41. (previously presented) The computer readable medium of claim **21**, wherein the plurality of pre-designated system functions comprises a clock function.

42. (previously presented) The computer readable medium of claim **21**, wherein the plurality of pre-designated system functions comprises an alarm function.

Please add the following new claims.

43. (new) The computer readable medium of claim **21**, wherein a description of the multi-step user gesture is publicly available.

44. (new) The computer readable medium of claim **21**, wherein the multi-step user gesture does not require non-public knowledge.

45. (new) The computer readable medium of claim **21**, wherein the multi-step user gesture does not involve a user-specific password or passcode.

REMARKS

Applicants express appreciation to the Examiner for the courtesy of an interview granted to applicant's representative Marc A. Berger (Reg. No. 44,029) and assignee's representative Joseph Shain. The interview was held by telephone on Thursday, May 2, 2013. The substance of the interview focused on proposed amendments to claim **21**.

Applicant's representative has carefully studied the outstanding Office Action. The present amendment is intended to place the application in condition for allowance and is believed to overcome all of the rejections made by the Office Action. Favorable reconsideration and allowance of the application are respectfully requested.

Applicant has amended claims **21**, **37** and **39** without disclaiming the right to pursue the subject matter of these claims prior to amendment. Applicant has added new claims **43** – **45**. No new matter has been introduced, and support for the claim amendments is provided below. Claims **21**, **37** and **39** – **45** are presented for examination.

Claim Rejections – 35 U.S.C. §112

On pages 2 and 3, the Office Action has rejected claim **21** under 35 U.S.C. §112(a) as failing to comply with the written description requirement.

The Office Action has indicated that "*The home state as described at best by the specification is a state comprising tap-activatable icons*". Applicant has amended claim **21**, without acquiescence to the Office Action's reason for rejection, to include the feature of a tap-present state wherein a plurality of tap-activatable icons for a respective plurality of pre-designated system functions are present, each system function being activated in response to a tap on its respective icon.

The Office Action has further indicated that "*There is no disclosure in the specification to describe that there is a state in which tap is disabled on the screen, only that tap-activatable icons are absent*". Applicant has amended claim **21**, without acquiescence to the Office Action's reason for rejection, to include the feature of a tap-absent state, wherein tap-activatable icons are absent.

The Office Action has further indicated that "*The multi-step gesture taught in the specification teaches activating … when a touch sensitive area detects a movement of an object with its starting point A within the representation of a function on the menu area 2 …*" Applicant has amended claim **21**, without acquiescence to the Office Action's reason for rejection, to include the feature of an otherwise-activatable graphic for transitioning the user interface from the tap-absent state to the tap-present state in response to a multi-step user gesture comprising (i) an object touching the touch sensitive surface at a location where the otherwise-activatable graphic is provided, and (ii) the object gliding along the touch sensitive surface away from the touched location.

Claim Rejections – 35 U.S.C. §103

On pages 4 - 6, the Office Action has rejected claims **21**, **37** and **39** under 35 U.S.C. §103(a) as being unpatentable over Kho, US Patent No. 7,665,043 ("Kho") in view of Hirayama et al., US Patent No. 5,406,307 ("Hirayama").

On pages 6 and 7, the Office Action has rejected claims **40** and **41** under 35 U.S.C. §103(a) as being unpatentable over Kho in view of Hirayama, and in view of Pogue, Palm Pilot: The Ultimate Guide, 2nd Edition ("Pogue").

On page 7, the Office Action has rejected claim **42** under 35 U.S.C. §103(a) as being unpatentable over Kho in view of

Hirayama, and in view of Carlson, Palm Organizers: Visual Quickstart Guide Palm Organizers ("Carlson").

Brief Discussion of Applied References

The reference of Carlson was discussed in applicant's response filed on July 3, 2012. The reference of Pogue was discussed in applicant's response filed on December 20, 2012.

Kho describes user interfaces for menus and applications, for handheld devices having touch screens (Kho/ col. 1, lines 12 – 19; col. 4, lines 18 – 26), and addresses the problem of how to reduce the number of times a user is required to tap or make contact with the screen (Kho/ col. 1, lines 42 – 44; col. 8, lines 34 - 41). Thus Kho replaces user interface actions conventionally performed through touch screen gestures, with pressing of mechanical buttons that are provided outside of the touch screen on the handheld device housing (Kho/ col. 2, lines 51 – 58; col. 4, lines 50 – 55; buttons 114 and 116 in FIG. 1A). Kho describes that when the handheld device is in a sleep/low-power mode, a user can both "wake up" the device and execute a specific application, such as a calendar or address book, by pressing a mechanical button that represents that application (Kho/ col. 7, lines 39 – 50). When the handheld device is in a normal power state, the mechanical buttons are used, instead of taps or slide gestures on the screen, for executing applications and for navigating screen menus (Kho/ col. 4, lines 50 – 67; col. 5, lines 15 – 19, 35 - 39 and 59 - 62).

Hirayama describes a stylus-based touch screen user interface (Hirayama/ Abstract, col. 1, lines 7 – 12 and 52 – 55; FIGS. 3A and 3B). The user interface includes a touch-sensitive strip along the top and right edges of the screen, on which icons are displayed (Hirayama/ strip 45 in FIG. 3A). A user touches one of the icons representing an

application with the point of the stylus and drags the icon to a location in the interior of the screen to expand the icon into an application window for the represented application (Hirayama/ col. 4, line 61 – col. 5, line 12). To reduce an open application window back into an icon, the user drags the open application window to strip 45 (Hirayama/ col. 6, lines 22 - 31).

Response to Claim Rejections – 35 U.S.C. §103

In rejecting claim **21**, the Office Action cites Kho as teaching the two states, and cites Hirayama as teaching the multi-step user gesture. The Office Action has associated the tap-disabled state with Kho's sleep/low power state.

I. Kho's sleep/low power state cannot correspond to the currently claimed tap-absent state.

Although Kho's sleep/lower power state does not have tap-activatable icons, neither does it have otherwise-activatable graphics. In distinction, the tap-absent state as currently claimed has an otherwise-activatable graphic.

II. The cited passage of Kho for the tap-disabled state relates to mechanical buttons, and not to touch-sensitive displayed buttons.

In rejecting claim **21** on page 4, the Office Action cites Kho, col. 4, lines 41 – 55, as teaching "*a touch sensitive area in which is provided a graphic for transitioning the user interface from the tap-disabled state to the home state*". However, applicant respectfully submits that the cited passage of Kho relates to application buttons 114 of FIG. 1A, which are mechanical buttons on the front panel of the

housing outside of the touch sensitive area, namely, outside of display 120 and dedicated input area 124. Kho states at col. 2, lines 54 - 58, "*In particular, a handheld computer is provided having a button set or other **mechanical** actuatable mechanism that can be used to navigate amongst menus and menu items, select menu items, and select to cancel the activation of a menu*" (emphasis added).

III. The combination of Kho and Hirayama applied by the Office Action is counter-intuitive.

Specifically, the Office Action is applying Hirayama's touch gesture to transition a device from a sleep/low-power mode to a power-on mode. However, Kho's mechanical button uses no power before it is actuated, whereas enabling Hirayama's touch gesture requires power to maintain touch sensitivity of a touch screen. This would defeat the purpose of the sleep/low-power mode.

Moreover, Kho is motivated by reducing the number of required touch screen taps and glides, and replacing them with mechanical button presses and, as such, Kho teaches away from applying Hirayama's touch gesture.

The rejections of the claims under 35 U.S.C. §103 will now be dealt with specifically.

Claims 21, 37 and 39 - 42

Independent claim **21** for a computer readable storage medium, as amended, recites the features of

"*a **tap-present state**, wherein a plurality of tap-activatable icons for a respective plurality of pre-designated system*

functions are present, each system function being activated in response to a tap on its respective icon", and

"*a **tap-absent state**, wherein tap-activatable icons are absent **but an otherwise-activatable graphic is present** for transitioning the user interface from the tap-absent state to the tap-present state in response to a multi-step user gesture comprising (i) an object touching the touch sensitive surface at a location where the otherwise-activatable graphic is provided, and (ii) the object gliding along the touch sensitive surface away from the touched location*"

As explained above, these features are neither shown nor suggested in Kho, Hirayama, Pogue or Carlson.

Because claims **37** and **39** – **45** depend from claim **21** and include additional features, applicants respectfully submit that claims **37** and **39** – **45** are not anticipated or rendered obvious by Kho, Hirayama, Pogue or Carlson, taken alone or in combination.

Accordingly claims **21**, **37** and **39** – **45** are deemed to be allowable.

Support for New and Amended Claims in Original Specification

Independent claim **21** for a computer readable storage medium has been amended to include the feature of a tap-present state, wherein a plurality of tap-activatable icons for a respective plurality of pre-designated system functions are present, each system function being activated in response to a tap on its respective icon. This feature is supported in the original specification at least by FIG. 3.

Claim **21** has also been amended to include the feature of a tap-absent state, wherein tap-activatable icons are absent but an otherwise-activatable graphic is present for transitioning the user

interface from the tap-absent state to the tap-present state. This feature is supported in the original specification at least by FIGS. 1 and 2.

New dependent claim **43** includes the feature that a description of the multi-step user gesture is publicly available. This feature is supported in the original specification at least by page 2, lines 25 – 28, and by FIG. 2, which present the multi-step gesture as a generic gesture, without a non-public component.

New dependent claim **44** includes the feature that the multi-step user gesture does not require non-public knowledge. This feature is supported in the original specification at least by page 2, lines 25 – 28, and by FIG. 2, which present the multi-step gesture as a generic gesture, without a non-public component.

New dependent claim **45** includes the feature that the multi-step user gesture does not involve a user-specific password or passcode. This feature is supported in the original specification at least by page 2, lines 25 – 28, and by FIG. 2, which present the multi-step gesture as a generic gesture, not associated with entering a user-specific password or passcode.

For the foregoing reasons, applicant respectfully submits that the applicable objections and rejections have been overcome and that the claims are in condition for allowance.

If any matters can be resolved by telephone, applicant requests that the Patent and Trademark Office please contact applicant's representative at the telephone number listed below.

Respectfully submitted,

SOQUEL GROUP LLC

Dated: May 3, 2013

/Marc A. Berger/
Marc A. Berger
Reg. No. 44,029

P.O. Box 691
Soquel, CA 95073
(831) 426-8200
Customer No. 75660

Electronic Patent Application Fee Transmittal

Application Number:	13310755
Filing Date:	04-Dec-2011
Title of Invention:	USER INTERFACE
First Named Inventor/Applicant Name:	Magnus Goertz
Filer:	Marc Aron Berger
Attorney Docket Number:	NEONODE.P039

Filed as Large Entity

Utility under 35 USC 111(a) Filing Fees

Description	Fee Code	Quantity	Amount	Sub-Total in USD($)
Basic Filing:				
Pages:				
Claims:				
Claims in Excess of 20	1202	3	80	240
Miscellaneous-Filing:				
Petition:				
Patent-Appeals-and-Interference:				
Post-Allowance-and-Post-Issuance:				
Extension-of-Time:				

Description	Fee Code	Quantity	Amount	Sub-Total in USD($)
Miscellaneous:				
			Total in USD ($)	**240**

Electronic Acknowledgement Receipt	
EFS ID:	15680708
Application Number:	13310755
International Application Number:	
Confirmation Number:	1066
Title of Invention:	USER INTERFACE
First Named Inventor/Applicant Name:	Magnus Goertz
Customer Number:	75660
Filer:	Marc Aron Berger
Filer Authorized By:	
Attorney Docket Number:	NEONODE.P039
Receipt Date:	03-MAY-2013
Filing Date:	04-DEC-2011
Time Stamp:	03:05:15
Application Type:	Utility under 35 USC 111(a)

Payment information:

Submitted with Payment	yes
Payment Type	Credit Card
Payment was successfully received in RAM	$240
RAM confirmation Number	6711
Deposit Account	
Authorized User	

File Listing:

Document Number	Document Description	File Name	File Size(Bytes)/ Message Digest	Multi Part /.zip	Pages (if appl.)

1		NEONODE-P039_Amendment_05-03-2013.pdf	125774 1e9ed7e90e84fbe3ee1f1dfd73493cf385f76db9	yes	14

	Multipart Description/PDF files in .zip description		
	Document Description	**Start**	**End**
	Amendment/Req. Reconsideration-After Non-Final Reject	1	1
	Claims	2	6
	Applicant Arguments/Remarks Made in an Amendment	7	14

Warnings:

Information:

2	Fee Worksheet (SB06)	fee-info.pdf	30138 84098a794aef73656cf229980c903496da7cd6e7	no	2

Warnings:

Information:

Total Files Size (in bytes):	155912

This Acknowledgement Receipt evidences receipt on the noted date by the USPTO of the indicated documents, characterized by the applicant, and including page counts, where applicable. It serves as evidence of receipt similar to a Post Card, as described in MPEP 503.

New Applications Under 35 U.S.C. 111
If a new application is being filed and the application includes the necessary components for a filing date (see 37 CFR 1.53(b)-(d) and MPEP 506), a Filing Receipt (37 CFR 1.54) will be issued in due course and the date shown on this Acknowledgement Receipt will establish the filing date of the application.

National Stage of an International Application under 35 U.S.C. 371
If a timely submission to enter the national stage of an international application is compliant with the conditions of 35 U.S.C. 371 and other applicable requirements a Form PCT/DO/EO/903 indicating acceptance of the application as a national stage submission under 35 U.S.C. 371 will be issued in addition to the Filing Receipt, in due course.

New International Application Filed with the USPTO as a Receiving Office
If a new international application is being filed and the international application includes the necessary components for an international filing date (see PCT Article 11 and MPEP 1810), a Notification of the International Application Number and of the International Filing Date (Form PCT/RO/105) will be issued in due course, subject to prescriptions concerning national security, and the date shown on this Acknowledgement Receipt will establish the international filing date of the application.

PTO/SB/06 (09-11)
Approved for use through 1/31/2014. OMB 0651-0032
U.S. Patent and Trademark Office; U.S. DEPARTMENT OF COMMERCE
Under the Paperwork Reduction Act of 1995, no persons are required to respond to a collection of information unless it displays a valid OMB control number.

PATENT APPLICATION FEE DETERMINATION RECORD Substitute for Form PTO-875	Application or Docket Number 13/310,755	Filing Date 12/04/2011	☐ To be Mailed

ENTITY: ☒ LARGE ☐ SMALL ☐ MICRO

APPLICATION AS FILED – PART I

FOR	(Column 1) NUMBER FILED	(Column 2) NUMBER EXTRA	RATE ($)	FEE ($)
☐ BASIC FEE (37 CFR 1.16(a), (b), or (c))	N/A	N/A	N/A	
☐ SEARCH FEE (37 CFR 1.16(k), (i), or (m))	N/A	N/A	N/A	
☐ EXAMINATION FEE (37 CFR 1.16(o), (p), or (q))	N/A	N/A	N/A	
TOTAL CLAIMS (37 CFR 1.16(i))	minus 20 = *		X $ =	
INDEPENDENT CLAIMS (37 CFR 1.16(h))	minus 3 = *		X $ =	
☐ APPLICATION SIZE FEE (37 CFR 1.16(s))	If the specification and drawings exceed 100 sheets of paper, the application size fee due is $310 ($155 for small entity) for each additional 50 sheets or fraction thereof. See 35 U.S.C. 41(a)(1)(G) and 37 CFR 1.16(s).			
☐ MULTIPLE DEPENDENT CLAIM PRESENT (37 CFR 1.16(j))				
* If the difference in column 1 is less than zero, enter "0" in column 2.			TOTAL	

APPLICATION AS AMENDED – PART II

AMENDMENT	05/03/2013	(Column 1) CLAIMS REMAINING AFTER AMENDMENT		(Column 2) HIGHEST NUMBER PREVIOUSLY PAID FOR	(Column 3) PRESENT EXTRA	RATE ($)	ADDITIONAL FEE ($)
	Total (37 CFR 1.16(i))	* 20	Minus	** 20	= 0	X $80 =	0
	Independent (37 CFR 1.16(h))	* 4	Minus	***4	= 0	X $420 =	0
	☐ Application Size Fee (37 CFR 1.16(s))						
	☐ FIRST PRESENTATION OF MULTIPLE DEPENDENT CLAIM (37 CFR 1.16(j))						
						TOTAL ADD'L FEE	0

AMENDMENT		(Column 1) CLAIMS REMAINING AFTER AMENDMENT		(Column 2) HIGHEST NUMBER PREVIOUSLY PAID FOR	(Column 3) PRESENT EXTRA	RATE ($)	ADDITIONAL FEE ($)
	Total (37 CFR 1.16(i))	*	Minus	**	=	X $ =	
	Independent (37 CFR 1.16(h))	*	Minus	***	=	X $ =	
	☐ Application Size Fee (37 CFR 1.16(s))						
	☐ FIRST PRESENTATION OF MULTIPLE DEPENDENT CLAIM (37 CFR 1.16(j))						
						TOTAL ADD'L FEE	

* If the entry in column 1 is less than the entry in column 2, write "0" in column 3.
** If the "Highest Number Previously Paid For" IN THIS SPACE is less than 20, enter "20".
*** If the "Highest Number Previously Paid For" IN THIS SPACE is less than 3, enter "3".
The "Highest Number Previously Paid For" (Total or Independent) is the highest number found in the appropriate box in column 1.

LIE
/DONNA 1. SMALLS LOGAN/

This collection of information is required by 37 CFR 1.16. The information is required to obtain or retain a benefit by the public which is to file (and by the USPTO to process) an application. Confidentiality is governed by 35 U.S.C. 122 and 37 CFR 1.14. This collection is estimated to take 12 minutes to complete, including gathering, preparing, and submitting the completed application form to the USPTO. Time will vary depending upon the individual case. Any comments on the amount of time you require to complete this form and/or suggestions for reducing this burden, should be sent to the Chief Information Officer, U.S. Patent and Trademark Office, U.S. Department of Commerce, P.O. Box 1450, Alexandria, VA 22313-1450. DO NOT SEND FEES OR COMPLETED FORMS TO THIS ADDRESS. **SEND TO: Commissioner for Patents, P.O. Box 1450, Alexandria, VA 22313-1450.**

If you need assistance in completing the form, call 1-800-PTO-9199 and select option 2.

PTO/SB/08a (01-10)
Approved for use through 07/31/2012. OMB 0651-0031
U.S. Patent and Trademark Office; U.S. DEPARTMENT OF COMMERCE

Under the Paperwork Reduction Act of 1995, no persons are required to respond to a collection of information unless it contains a valid OMB control number.

INFORMATION DISCLOSURE STATEMENT BY APPLICANT

(Not for submission under 37 CFR 1.99)

Application Number	13310755
Filing Date	2011-12-04
First Named Inventor	Magnus Goertz
Art Unit	2171
Examiner Name	Ryan F. Pitaro
Attorney Docket Number	NEONODE.P039

U.S.PATENTS

Examiner Initial*	Cite No	Patent Number	Kind Code[1]	Issue Date	Name of Patentee or Applicant of cited Document	Pages,Columns,Lines where Relevant Passages or Relevant Figures Appear
	1	5785439	A	1998-07-28	Bowen	
	2	5821930	A	1998-10-13	Hansen	
	3	5898434	A	1999-04-27	Small et al.	
	4	6304261	B1	2001-10-16	Shields et al.	
	5	6646633	B1	2003-11-11	Nicolas	
	6	7304638	B2	2007-12-04	Murphy	

If you wish to add additional U.S. Patent citation information please click the Add button.

U.S.PATENT APPLICATION PUBLICATIONS

Examiner Initial*	Cite No	Publication Number	Kind Code[1]	Publication Date	Name of Patentee or Applicant of cited Document	Pages,Columns,Lines where Relevant Passages or Relevant Figures Appear

INFORMATION DISCLOSURE STATEMENT BY APPLICANT (**Not for submission under 37 CFR 1.99**)		
	Application Number	13310755
	Filing Date	2011-12-04
	First Named Inventor	Magnus Goertz
	Art Unit	2171
	Examiner Name	Ryan F. Pitaro
	Attorney Docket Number	NEONODE.P039

	1					

If you wish to add additional U.S. Published Application citation information please click the Add button.

FOREIGN PATENT DOCUMENTS

Examiner Initial*	Cite No	Foreign Document Number[3]	Country Code[2] ¡	Kind Code[4]	Publication Date	Name of Patentee or Applicant of cited Document	Pages,Columns,Lines where Relevant Passages or Relevant Figures Appear	T[5]
	1							☐

If you wish to add additional Foreign Patent Document citation information please click the Add button

NON-PATENT LITERATURE DOCUMENTS

Examiner Initials*	Cite No	Include name of the author (in CAPITAL LETTERS), title of the article (when appropriate), title of the item (book, magazine, journal, serial, symposium, catalog, etc), date, pages(s), volume-issue number(s), publisher, city and/or country where published.	T[5]
	1		☐

If you wish to add additional non-patent literature document citation information please click the Add button

EXAMINER SIGNATURE

Examiner Signature		Date Considered	

*EXAMINER: Initial if reference considered, whether or not citation is in conformance with MPEP 609. Draw line through a citation if not in conformance and not considered. Include copy of this form with next communication to applicant.

[1] See Kind Codes of USPTO Patent Documents at www.USPTO.GOV or MPEP 901.04. [2] Enter office that issued the document, by the two-letter code (WIPO Standard ST.3). [3] For Japanese patent documents, the indication of the year of the reign of the Emperor must precede the serial number of the patent document. [4] Kind of document by the appropriate symbols as indicated on the document under WIPO Standard ST.16 if possible. [5] Applicant is to place a check mark here if English language translation is attached.

INFORMATION DISCLOSURE STATEMENT BY APPLICANT (**Not for submission under 37 CFR 1.99**)		
	Application Number	13310755
	Filing Date	2011-12-04
	First Named Inventor	Magnus Goertz
	Art Unit	2171
	Examiner Name	Ryan F. Pitaro
	Attorney Docket Number	NEONODE.P039

CERTIFICATION STATEMENT

Please see 37 CFR 1.97 and 1.98 to make the appropriate selection(s):

☐ That each item of information contained in the information disclosure statement was first cited in any communication from a foreign patent office in a counterpart foreign application not more than three months prior to the filing of the information disclosure statement. See 37 CFR 1.97(e)(1).

OR

☐ That no item of information contained in the information disclosure statement was cited in a communication from a foreign patent office in a counterpart foreign application, and, to the knowledge of the person signing the certification after making reasonable inquiry, no item of information contained in the information disclosure statement was known to any individual designated in 37 CFR 1.56(c) more than three months prior to the filing of the information disclosure statement. See 37 CFR 1.97(e)(2).

☐ See attached certification statement.

☒ The fee set forth in 37 CFR 1.17 (p) has been submitted herewith.

☒ A certification statement is not submitted herewith.

SIGNATURE

A signature of the applicant or representative is required in accordance with CFR 1.33, 10.18. Please see CFR 1.4(d) for the form of the signature.

Signature	/Marc A. Berger/	Date (YYYY-MM-DD)	2013-04-14
Name/Print	Marc A. Berger	Registration Number	44029

This collection of information is required by 37 CFR 1.97 and 1.98. The information is required to obtain or retain a benefit by the public which is to file (and by the USPTO to process) an application. Confidentiality is governed by 35 U.S.C. 122 and 37 CFR 1.14. This collection is estimated to take 1 hour to complete, including gathering, preparing and submitting the completed application form to the USPTO. Time will vary depending upon the individual case. Any comments on the amount of time you require to complete this form and/or suggestions for reducing this burden, should be sent to the Chief Information Officer, U.S. Patent and Trademark Office, U.S. Department of Commerce, P.O. Box 1450, Alexandria, VA 22313-1450. DO NOT SEND FEES OR COMPLETED FORMS TO THIS ADDRESS. **SEND TO: Commissioner for Patents, P.O. Box 1450, Alexandria, VA 22313-1450.**

Privacy Act Statement

The Privacy Act of 1974 (P.L. 93-579) requires that you be given certain information in connection with your submission of the attached form related to a patent application or patent. Accordingly, pursuant to the requirements of the Act, please be advised that: (1) the general authority for the collection of this information is 35 U.S.C. 2(b)(2); (2) furnishing of the information solicited is voluntary; and (3) the principal purpose for which the information is used by the U.S. Patent and Trademark Office is to process and/or examine your submission related to a patent application or patent. If you do not furnish the requested information, the U.S. Patent and Trademark Office may not be able to process and/or examine your submission, which may result in termination of proceedings or abandonment of the application or expiration of the patent.

The information provided by you in this form will be subject to the following routine uses:

1. The information on this form will be treated confidentially to the extent allowed under the Freedom of Information Act (5 U.S.C. 552) and the Privacy Act (5 U.S.C. 552a). Records from this system of records may be disclosed to the Department of Justice to determine whether the Freedom of Information Act requires disclosure of these record s.

2. A record from this system of records may be disclosed, as a routine use, in the course of presenting evidence to a court, magistrate, or administrative tribunal, including disclosures to opposing counsel in the course of settlement negotiations.

3. A record in this system of records may be disclosed, as a routine use, to a Member of Congress submitting a request involving an individual, to whom the record pertains, when the individual has requested assistance from the Member with respect to the subject matter of the record.

4. A record in this system of records may be disclosed, as a routine use, to a contractor of the Agency having need for the information in order to perform a contract. Recipients of information shall be required to comply with the requirements of the Privacy Act of 1974, as amended, pursuant to 5 U.S.C. 552a(m).

5. A record related to an International Application filed under the Patent Cooperation Treaty in this system of records may be disclosed, as a routine use, to the International Bureau of the World Intellectual Property Organization, pursuant to the Patent Cooperation Treaty.

6. A record in this system of records may be disclosed, as a routine use, to another federal agency for purposes of National Security review (35 U.S.C. 181) and for review pursuant to the Atomic Energy Act (42 U.S.C. 218(c)).

7. A record from this system of records may be disclosed, as a routine use, to the Administrator, General Services, or his/her designee, during an inspection of records conducted by GSA as part of that agency's responsibility to recommend improvements in records management practices and programs, under authority of 44 U.S.C. 2904 and 2906. Such disclosure shall be made in accordance with the GSA regulations governing inspection of records for this purpose, and any other relevant (i.e., GSA or Commerce) directive. Such disclosure shall not be used to make determinations about individuals.

8. A record from this system of records may be disclosed, as a routine use, to the public after either publication of the application pursuant to 35 U.S.C. 122(b) or issuance of a patent pursuant to 35 U.S.C. 151. Further, a record may be disclosed, subject to the limitations of 37 CFR 1.14, as a routine use, to the public if the record was filed in an application which became abandoned or in which the proceedings were terminated and which application is referenced by either a published application, an application open to public inspections or an issued patent.

9. A record from this system of records may be disclosed, as a routine use, to a Federal, State, or local law enforcement agency, if the USPTO becomes aware of a violation or potential violation of law or regulation.

Electronic Patent Application Fee Transmittal	
Application Number:	13310755
Filing Date:	04-Dec-2011
Title of Invention:	USER INTERFACE
First Named Inventor/Applicant Name:	Magnus Goertz
Filer:	Marc Aron Berger
Attorney Docket Number:	NEONODE.P039
Filed as Large Entity	

Utility under 35 USC 111(a) Filing Fees

Description	Fee Code	Quantity	Amount	Sub-Total in USD($)
Basic Filing:				
Pages:				
Claims:				
Miscellaneous-Filing:				
Petition:				
Patent-Appeals-and-Interference:				
Post-Allowance-and-Post-Issuance:				
Extension-of-Time:				

Description	Fee Code	Quantity	Amount	Sub-Total in USD($)
Miscellaneous:				
Submission- Information Disclosure Stmt	1806	1	180	180
		Total in USD ($)		**180**

Electronic Acknowledgement Receipt

EFS ID:	15511247
Application Number:	13310755
International Application Number:	
Confirmation Number:	1066
Title of Invention:	USER INTERFACE
First Named Inventor/Applicant Name:	Magnus Goertz
Customer Number:	75660
Filer:	Marc Aron Berger
Filer Authorized By:	
Attorney Docket Number:	NEONODE.P039
Receipt Date:	14-APR-2013
Filing Date:	04-DEC-2011
Time Stamp:	09:03:26
Application Type:	Utility under 35 USC 111(a)

Payment information:

Submitted with Payment	yes
Payment Type	Credit Card
Payment was successfully received in RAM	$180
RAM confirmation Number	7487
Deposit Account	
Authorized User	

File Listing:

Document Number	Document Description	File Name	File Size(Bytes)/ Message Digest	Multi Part /.zip	Pages (if appl.)

1	Information Disclosure Statement (IDS) Form (SB08)	NEONODE-P039_InformationDisclosureStatement_04-14-2013.pdf	70180 8d610595f0be2d87872bf485e970168ae9962039	no	4
Warnings:					
Information:					
This is not an USPTO supplied IDS fillable form					
2	Fee Worksheet (SB06)	fee-info.pdf	30280 6d894a5eaeb90f58fe60a1502984d50b23d39ebd	no	2
Warnings:					
Information:					
		Total Files Size (in bytes):	100460		

This Acknowledgement Receipt evidences receipt on the noted date by the USPTO of the indicated documents, characterized by the applicant, and including page counts, where applicable. It serves as evidence of receipt similar to a Post Card, as described in MPEP 503.

New Applications Under 35 U.S.C. 111
If a new application is being filed and the application includes the necessary components for a filing date (see 37 CFR 1.53(b)-(d) and MPEP 506), a Filing Receipt (37 CFR 1.54) will be issued in due course and the date shown on this Acknowledgement Receipt will establish the filing date of the application.

National Stage of an International Application under 35 U.S.C. 371
If a timely submission to enter the national stage of an international application is compliant with the conditions of 35 U.S.C. 371 and other applicable requirements a Form PCT/DO/EO/903 indicating acceptance of the application as a national stage submission under 35 U.S.C. 371 will be issued in addition to the Filing Receipt, in due course.

New International Application Filed with the USPTO as a Receiving Office
If a new international application is being filed and the international application includes the necessary components for an international filing date (see PCT Article 11 and MPEP 1810), a Notification of the International Application Number and of the International Filing Date (Form PCT/RO/105) will be issued in due course, subject to prescriptions concerning national security, and the date shown on this Acknowledgement Receipt will establish the international filing date of the application.

UNITED STATES PATENT AND TRADEMARK OFFICE

UNITED STATES DEPARTMENT OF COMMERCE
United States Patent and Trademark Office
Address: COMMISSIONER FOR PATENTS
P.O. Box 1450
Alexandria, Virginia 22313-1450
www.uspto.gov

APPLICATION NO.	FILING DATE	FIRST NAMED INVENTOR	ATTORNEY DOCKET NO.	CONFIRMATION NO.
13/310,755	12/04/2011	Magnus Goertz	NEONODE.P039	1066

75660 7590 03/04/2013

Soquel Group, LLC
P.O. Box 691
Soquel, CA 95073

EXAMINER	
PITARO, RYAN F	
ART UNIT	PAPER NUMBER
2171	

NOTIFICATION DATE	DELIVERY MODE
03/04/2013	ELECTRONIC

Please find below and/or attached an Office communication concerning this application or proceeding.

The time period for reply, if any, is set in the attached communication.

Notice of the Office communication was sent electronically on above-indicated "Notification Date" to the following e-mail address(es):

pto@soquelgroup.com
rblumberg@soquelgroup.com
mberger@soquelgroup.com

Office Action Summary	Application No.	Applicant(s)	
	13/310,755	GOERTZ, MAGNUS	
	Examiner	Art Unit	
	RYAN PITARO	2171	

-- The MAILING DATE of this communication appears on the cover sheet with the correspondence address --

Period for Reply

A SHORTENED STATUTORY PERIOD FOR REPLY IS SET TO EXPIRE 3 MONTH(S) OR THIRTY (30) DAYS, WHICHEVER IS LONGER, FROM THE MAILING DATE OF THIS COMMUNICATION.

- Extensions of time may be available under the provisions of 37 CFR 1.136(a). In no event, however, may a reply be timely filed after SIX (6) MONTHS from the mailing date of this communication.
- If NO period for reply is specified above, the maximum statutory period will apply and will expire SIX (6) MONTHS from the mailing date of this communication.
- Failure to reply within the set or extended period for reply will, by statute, cause the application to become ABANDONED (35 U.S.C. § 133). Any reply received by the Office later than three months after the mailing date of this communication, even if timely filed, may reduce any earned patent term adjustment. See 37 CFR 1.704(b).

Status

1)☐ Responsive to communication(s) filed on *20 December 2012*.

2a)☐ This action is **FINAL**. 2b)☒ This action is non-final.

3)☐ An election was made by the applicant in response to a restriction requirement set forth during the interview on _____; the restriction requirement and election have been incorporated into this action.

4)☐ Since this application is in condition for allowance except for formal matters, prosecution as to the merits is closed in accordance with the practice under *Ex parte Quayle*, 1935 C.D. 11, 453 O.G. 213.

Disposition of Claims

5)☒ Claim(s) *21,37 and 39-42* is/are pending in the application.

5a) Of the above claim(s) _____ is/are withdrawn from consideration.

6)☐ Claim(s) _____ is/are allowed.

7)☒ Claim(s) *21,37,39-42* is/are rejected.

8)☐ Claim(s) _____ is/are objected to.

9)☐ Claim(s) _____ are subject to restriction and/or election requirement.

* If any claims have been determined allowable, you may be eligible to benefit from the **Patent Prosecution Highway** program at a participating intellectual property office for the corresponding application. For more information, please see http://www.uspto.gov/patents/init_events/pph/index.jsp or send an inquiry to PPHfeedback@uspto.gov.

Application Papers

10)☐ The specification is objected to by the Examiner.

11)☐ The drawing(s) filed on _____ is/are: a)☐ accepted or b)☐ objected to by the Examiner.

Applicant may not request that any objection to the drawing(s) be held in abeyance. See 37 CFR 1.85(a).

Replacement drawing sheet(s) including the correction is required if the drawing(s) is objected to. See 37 CFR 1.121(d).

Priority under 35 U.S.C. § 119

12)☐ Acknowledgment is made of a claim for foreign priority under 35 U.S.C. § 119(a)-(d) or (f).

a)☐ All b)☐ Some * c)☐ None of:

1.☐ Certified copies of the priority documents have been received.

2.☐ Certified copies of the priority documents have been received in Application No. _____.

3.☐ Copies of the certified copies of the priority documents have been received in this National Stage application from the International Bureau (PCT Rule 17.2(a)).

* See the attached detailed Office action for a list of the certified copies not received.

Attachment(s)

1) ☒ Notice of References Cited (PTO-892)

2) ☒ Information Disclosure Statement(s) (PTO/SB/08) Paper No(s)/Mail Date *10/1/2012, 1/24/2013*.

3) ☐ Interview Summary (PTO-413) Paper No(s)/Mail Date. _____ .

4) ☐ Other: _____.

Response to Amendment

This action is in response to the amendment filed 12/2/2012. Claims 21 and 39 were amended. Claim 38 has been canceled. This action is non-final.

Claim Rejections - 35 USC § 112

The following is a quotation of 35 U.S.C. 112(a):
(a) IN GENERAL.—The specification shall contain a written description of the invention, and of the manner and process of making and using it, in such full, clear, concise, and exact terms as to enable any person skilled in the art to which it pertains, or with which it is most nearly connected, to make and use the same, and shall set forth the best mode contemplated by the inventor or joint inventor of carrying out the invention.

The following is a quotation of 35 U.S.C. 112 (pre-AIA), first paragraph:
The specification shall contain a written description of the invention, and of the manner and process of making and using it, in such full, clear, concise, and exact terms as to enable any person skilled in the art to which it pertains, or with which it is most nearly connected, to make and use the same and shall set forth the best mode contemplated by the inventor of carrying out his invention.

Claim 1 is rejected under 35 U.S.C. 112(a) or 35 U.S.C. 112 (pre-AIA), first paragraph, as failing to comply with the written description requirement. The claim(s) contains subject matter which was not described in the specification in such a way as to reasonably convey to one skilled in the relevant art that the inventor or a joint inventor, or for pre-AIA the inventor(s), at the time the application was filed, had possession of the claimed invention. Home state and a tap-disabled state have not been described in the specification in such a way to reasonably convey to one skilled art that the inventor has possession of the claim invention. The home state as described at best by the specification is a state comprising tap-activatable icons. However, home state shall be

given no such meaning as an initial or default state since it was not described in the specification. Similarly a tap-disabled state has not been described in the specification in such a way to reasonably convey to one skilled art that the inventor has possession of the claim invention. The tap-disabled state is at best a state wherein no icons are present on the screen. There is no disclosure in the specification to describe that there is a state which tap is disabled on the screen, only that tap-activatable icons are absent. Figure 1, 2, and 3 do not describe the states as claimed. Furthermore, Home and tap-disabled are completely absent from the specification.

The multi-step gesture taught in the specification with respect to figures 1 2 3 teaches activating one of three functions when a touch sensitive area detects a movement of an object with its starting point A within the representation of a function on the menu area 2 and with a direction from the menu area 2 to the display area 3.

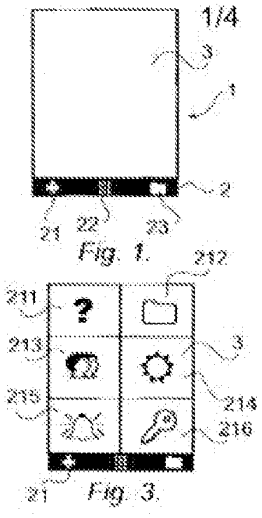

Fig. 1.

Fig. 3.

Claim Rejections - 35 USC § 103

The following is a quotation of 35 U.S.C. 103(a) which forms the basis for all obviousness rejections set forth in this Office action:

> (a) A patent may not be obtained though the invention is not identically disclosed or described as set forth in section 102 of this title, if the differences between the subject matter sought to be patented and the prior art are such that the subject matter as a whole would have been obvious at the time the invention was made to a person having ordinary skill in the art to which said subject matter pertains. Patentability shall not be negatived by the manner in which the invention was made.

Claims 21, 37and 39 are rejected under 35 U.S.C. 103(a) as being unpatentable over Kho ("Kho", US 7,665,043) in view of Hirayama et al ("Hirayama", US 5,406,307).

As per claim 21, Kho teaches a non-transitory computer readable medium storing instructions, which when executed by a processor of an electronic device, cause the processor to enable a user interface of the device, (Column 4 lines 18-26, handheld computing devices) the user interface comprising at least two states, namely (a) a home state comprising a plurality of tap-activatable icons for a respective plurality of pre-designated functions, each system function being activated in response to a tap on its respective icon (Figure 1A, icons present on the screen, notepad, memo pad, date book, etc.. activatable by tap.), and (b) a tap disabled state, wherein tap-activatable icons are absent, comprising a touch sensitive area in which is provided a graphic for transitioning the user interface from the tap-disabled state to the home state (Column 4 lines 41-55. The application buttons are used to operate applications. In one embodiment each application buttons is associated with an application. The handheld computer can be operated from a sleep or low-power mode into launching one of the

applications associated with the corresponding application button. Wherein the sleep mode or lower-power state is a mode wherein tap-activatable icons are absent.)

Kho fails to distinctly point out teaching transitioning from the tap-disabled state to the home state in response to a multi-step user gesture. However, Hirayama teaches activating utilizing a multi-step user gesture comprising an object touching the touch sensitive area at a location where the graphic is utilized, and the object gliding along the touch sensitive area away from the touched location (Figure 3A, Column 4 lines 61-Column 5 lines 13, If the user moves the point of the pen to the display without being separated therefrom after having touched the desired icon with the point of the pen and takes the point of the pen off the surface of the input tablet, an enlarged from of the processing display mode of the desired icon is automatically displayed on the display portion).

Therefore it would have been obvious to one of ordinary skill in the art at the time of the invention to combine the teaching of Hirayama with the teaching of Kho. Motivation to do so would have been to provide way for the user to enable the preferred mode such that it is unlikely to be carried out through unintentional movement or touching.

As per claim 37, Hirayama teaches the computer readable medium of claim 21, wherein any state transition elicited by a user gesture that begins at a location at which the graphic is provided, transitions to the home state (Figure 3A, Column 4 lines 61-Column 5 lines 13, If the user moves the point of the pen to the display without being

separated therefrom after having touched the desired icon with the point of the pen and takes the point of the pen off the surface of the input tablet, an enlarged from of the processing display mode of the desired icon is automatically displayed on the display portion).

As per claim 39, Kho teaches the computer readable medium of claim 21, wherein the home state does not display the tap-activatable icons within a window frame (Figure 1A, application screen).

Claims 40 and 41 are rejected under 35 U.S.C. 103(a) as being unpatentable over Kho (“Kho”, US 7,665,043) in view of Hirayama et al (“Hirayama”, US 5,406,307) in view of Pogue, David (“Pogue", “Palm Pilot: The Ultimate Guide, 2nd Edition).

As per claim 40, Kho-Hirayama fails to specifically teach a help function. However, Pogue teaches the computer readable medium of claim 21, wherein the plurality of pre-designated system functions comprises a help function (Pogue, Page 29, Graffiti Help). Therefore it would have been obvious to one of ordinary skill in the art at the time of the invention to combine the teaching of Pogue with the medium of Kho-Hirayama. Motivation to do so would have been to provide the user with a multitude of different functions so that the capabilities of the handheld computer are vast.

As per claim 41, Pogue teaches computer readable medium of claim 21, wherein the plurality of pre-designated system functions comprises a clock function (Pogue, Page 519, Clock Hack).

Claim 42 is rejected under 35 U.S.C. 103(a) as being unpatentable over Kho ("Kho", US 7,665,043) in view of Hirayama et al ("Hirayama", US 5,406,307) in view of Carlson, Jeff ("Carlson", Visual Quickstart Guide Palm Organizers).

As per claim 42, Kho-Hirayama fails to specifically teach an alarm function. However, Carlson teaches the computer readable medium of claim 21, wherein the plurality of pre-designated system functions comprises an alarm function (Page 47, Figure 2.26 Alarm Hack). Therefore it would have been obvious to one of ordinary skill in the art at the time of the invention to combine the teaching of Carlson with the medium of Kho-Hirayama. Motivation to do so would have been to provide the user with a multitude of different functions so that the capabilities of the handheld computer are vast.

Response to Arguments

Applicant's arguments with respect to claims 21,37,39-42 have been considered but are moot because the arguments do not apply to any of the references being used in the current rejection.

Conclusion

Any inquiry concerning this communication or earlier communications from the examiner should be directed to RYAN PITARO whose telephone number is (571)272-4071. The examiner can normally be reached on 9:00am - 5:30pm Mondays through Fridays.

If attempts to reach the examiner by telephone are unsuccessful, the examiner's supervisor, Matt Kim can be reached on 571-272-4182. The fax phone number for the organization where this application or proceeding is assigned is 571-273-8300.

Information regarding the status of an application may be obtained from the Patent Application Information Retrieval (PAIR) system. Status information for published applications may be obtained from either Private PAIR or Public PAIR. Status information for unpublished applications is available through Private PAIR only. For more information about the PAIR system, see http://pair-direct.uspto.gov. Should you have questions on access to the Private PAIR system, contact the Electronic Business Center (EBC) at 866-217-9197 (toll-free). If you would like assistance from a USPTO Customer Service Representative or access to the automated information system, call 800-786-9199 (IN USA OR CANADA) or 571-272-1000.

/Ryan F Pitaro/
Primary Examiner, Art Unit 2171

Notice of References Cited	Application/Control No. 13/310,755	Applicant(s)/Patent Under Reexamination GOERTZ, MAGNUS	
	Examiner RYAN PITARO	Art Unit 2171	Page 1 of 1

U.S. PATENT DOCUMENTS

*		Document Number Country Code-Number-Kind Code	Date MM-YYYY	Name	Classification
*	A	US-5,406,307 A	04-1995	Hirayama et al.	715/800
*	B	US-5,907,327 A	05-1999	Ogura et al.	715/764
*	C	US-2001/0000668 A1	05-2001	Bodnar, Eric O.	345/339
*	D	US-2001/0017934 A1	08-2001	Paloniemi et al.	382/107
*	E	US-2002/0029341 A1	03-2002	Juels et al.	713/184
*	F	US-2002/0054153 A1	05-2002	Arnold, Steve	345/810
*	G	US-6,573,883 B1	06-2003	Bartlett, Joel F.	345/156
*	H	US-2004/0001101 A1	01-2004	Trajkovic et al.	345/781
*	I	US-6,812,940 B2	11-2004	Arnold, Steve	715/817
*	J	US-7,046,232 B2	05-2006	Inagaki et al.	345/158
*	K	US-7,159,120 B2	01-2007	Muratov et al.	713/182
*	L	US-7,343,565 B2	03-2008	Ying et al.	715/780
*	M	US-7,665,043 B2	02-2010	Kho, Samuel	715/864

FOREIGN PATENT DOCUMENTS

*		Document Number Country Code-Number-Kind Code	Date MM-YYYY	Country	Name	Classification
	N					
	O					
	P					
	Q					
	R					
	S					
	T					

NON-PATENT DOCUMENTS

*		Include as applicable: Author, Title Date, Publisher, Edition or Volume, Pertinent Pages)
	U	
	V	
	W	
	X	

*A copy of this reference is not being furnished with this Office action. (See MPEP § 707.05(a).)
Dates in MM-YYYY format are publication dates. Classifications may be US or foreign.

EAST Search History

EAST Search History (Prior Art)

Ref #	Hits	Search Query	DBs	Default Operator	Plurals	Time Stamp
S1	2	"20080201637"	US-PGPUB; USPAT; EPO; DERWENT; IBM_TDB	OR	ON	2012/05/02 19:01
S2	2	"8015494"	US-PGPUB; USPAT; EPO; DERWENT; IBM_TDB	OR	ON	2012/05/02 19:14
S3	7	widget with combin$7 with clock	US-PGPUB; USPAT; EPO; DERWENT; IBM_TDB	OR	ON	2012/05/02 19:19
S4	4	"2008023528"	US-PGPUB; USPAT; EPO; DERWENT; IBM_TDB	OR	ON	2012/05/02 22:10
S5	2	"20080235285"	US-PGPUB; USPAT; EPO; DERWENT; IBM_TDB	OR	ON	2012/05/02 22:11
S6	4	slide with answer with (hang disconnect)	US-PGPUB; USPAT; EPO; DERWENT; IBM_TDB	OR	ON	2012/05/03 12:30
S7	500	slide with answer	US-PGPUB; USPAT; EPO; DERWENT; IBM_TDB	OR	ON	2012/05/03 12:30
S8	54	slide with answer and "715"/$.ccls.	US-PGPUB; USPAT; EPO; DERWENT; IBM_TDB	OR	ON	2012/05/03 12:30
S9	0	swipe with answer and "715"/$.ccls.	US-PGPUB; USPAT; EPO; DERWENT; IBM_TDB	OR	ON	2012/05/03 12:33
S10	2	"20120052920"	US-PGPUB; USPAT; EPO; DERWENT; IBM_TDB	OR	ON	2012/05/03 12:35

S11	2	answer with ignore with (slide swipe glide)	US-PGPUB; USPAT; EPO; DERWENT; IBM_TDB	OR	ON	2012/05/03 12:43
S12	7555	(keypad keyboard) with (input entry) with (mobile telephone phone) and @ay<="2002"	US-PGPUB; USPAT; EPO; DERWENT; IBM_TDB	OR	ON	2012/05/03 12:53
S13	348	(keypad keyboard) with (input entry) with (mobile telephone phone) and @ay<="2002" and "715"/$.ccls.	US-PGPUB; USPAT; EPO; DERWENT; IBM_TDB	OR	ON	2012/05/03 12:53
S14	263	(keypad keyboard) with (input entry) with (mobile telephone phone) and @ay<="2001" and "715"/$.ccls.	US-PGPUB; USPAT; EPO; DERWENT; IBM_TDB	OR	ON	2012/05/03 12:53
S15	71	(keypad keyboard) with (input entry) with (mobile telephone phone) with (number sms text) and @ay<="2001" and "715"/$.ccls.	US-PGPUB; USPAT; EPO; DERWENT; IBM_TDB	OR	ON	2012/05/03 12:54
S16	3	(touch virtual) near2(keypad keyboard) with (input entry) with (mobile telephone phone) with (number sms text) and @ay<="2001" and "715"/$.ccls.	US-PGPUB; USPAT; EPO; DERWENT; IBM_TDB	OR	ON	2012/05/03 12:54
S17	10	(touch virtual) near2(keypad keyboard) with (input entry) with (mobile telephone phone) and @ay<="2001" and "715"/$.ccls.	US-PGPUB; USPAT; EPO; DERWENT; IBM_TDB	OR	ON	2012/05/03 12:55
S18	18	(touch virtual) near2(keypad keyboard) with (input entry) with (mobile telephone phone) and @ay<="2002" and "715"/$.ccls.	US-PGPUB; USPAT; EPO; DERWENT; IBM_TDB	OR	ON	2012/05/03 12:56
S19	12	("20060088216" | "4763356" | "5159664" | "5363481" | "5500923" | "5974161" | "6084598" | "6243071" | "6424357" | "6791537" | "6810272" | "6944472").PN.	US-PGPUB; USPAT; USOCR	OR	ON	2012/05/03 12:57
S20	13	("4972496" | "5157783" | "5199104" | "5237651" | "5283864" | "5341293" | "5347295" | "5367453" | "5377281" | "5390281" | "5392387" | "5398310" | "5404442").PN.	US-PGPUB; USPAT; USOCR	OR	ON	2012/05/03 12:58
S21	2038	(smartphone (smart near phone)) and @ay<="2002"	US-PGPUB; USPAT; USOCR	OR	ON	2012/05/03 12:59
S22	88	(smartphone (smart near phone)) and @ay<="2002" and (touch virtual) near (keypad keyboard)	US-PGPUB; USPAT; USOCR	OR	ON	2012/05/03 13:00
S23	12	(smartphone (smart near phone)) and @ay<="2002" and (touch	US-PGPUB; USPAT;	OR	ON	2012/05/03 13:01

		virtual) near (keypad keyboard) and sms	USOCR			
S24	183	@ay<="2002" and (touch virtual) near (keypad keyboard) and sms	US-PGPUB; USPAT; USOCR	OR	ON	2012/05/03 13:03
S25	5	@ay<="2002" and (touch virtual) near (keypad keyboard) with sms	US-PGPUB; USPAT; USOCR	OR	ON	2012/05/03 13:04
S26	48	@ay<="2002" and (touch virtual) near (keypad keyboard) and sms with phone	US-PGPUB; USPAT; USOCR	OR	ON	2012/05/03 13:04
S27	185	save near4 text with application	US-PGPUB; USPAT; USOCR	OR	ON	2012/05/03 13:11
S28	52	save near4 text with application and @ay<="2002"	US-PGPUB; USPAT; USOCR	OR	ON	2012/05/03 13:12
S29	0	save near4 (string text) with application with (phone sms email) and @ay<="2002"	US-PGPUB; USPAT; USOCR	OR	ON	2012/05/03 13:13
S30	14	save near4 (string text) with (phone sms email) and @ay<="2002"	US-PGPUB; USPAT; USOCR	OR	ON	2012/05/03 13:13
S31	198	(string text) near input with (phone sms email) and @ay<="2002"	US-PGPUB; USPAT; USOCR	OR	ON	2012/05/03 13:15
S32	272	(string text) near2 input with (phone sms email) and @ay<="2002"	US-PGPUB; USPAT; USOCR	OR	ON	2012/05/03 13:16
S33	0	(string text) near2 input with execute with (phone sms email) and @ay<="2002"	US-PGPUB; USPAT; USOCR	OR	ON	2012/05/03 13:16
S34	16	(string text) near2 input with application with (phone sms email) and @ay<="2002"	US-PGPUB; USPAT; USOCR	OR	ON	2012/05/03 13:16
S35	6	(string text) near2 input with option with (phone call sms email) and @ay<="2002"	US-PGPUB; USPAT; USOCR	OR	ON	2012/05/03 13:19
S36	412	(string text) with option with (phone call sms email) and @ay<="2002"	US-PGPUB; USPAT; USOCR	OR	ON	2012/05/03 13:20
S37	43	(string text) with option with (phone call sms email) and @ay<="2002" and "715"/$.ccls.	US-PGPUB; USPAT; USOCR	OR	ON	2012/05/03 13:20
S38	99	(number) with option with (phone call sms email contact) and @ay<="2002" and "715"/$.ccls.	US-PGPUB; USPAT; USOCR	OR	ON	2012/05/03 13:22
S39	2	input near(number) with option with (phone call sms email contact) and @ay<="2002" and "715"/$.ccls.	US-PGPUB; USPAT; USOCR	OR	ON	2012/05/03 13:23
S40	105	input near3 (number) with (phone call sms email contact) and @ay<="2002" and "715"/$.ccls.	US-PGPUB; USPAT; USOCR	OR	ON	2012/05/03 13:25
S41	8	input near3 (number) with option with (phone call sms email contact) and @ay<="2002" and "715"/$.ccls.	US-PGPUB; USPAT; USOCR	OR	ON	2012/05/03 13:25
S42	5	field with (number) with option with	US-PGPUB;	OR	ON	2012/05/03

		(phone call sms email contact) and @ay<="2002" and "715"/$.ccls.	USPAT; USOCR			13:26
S43	99	(number) with option with (phone call sms email contact) and @ay<="2002" and "715"/$.ccls.	US-PGPUB; USPAT; USOCR	OR	ON	2012/05/03 13:27
S44	11	(number) with option with list with (phone call sms email contact) and @ay<="2002" and "715"/$.ccls.	US-PGPUB; USPAT; USOCR	OR	ON	2012/05/03 13:27
S45	0	file near type with switch with (touch tap) and @ay<="2002"	US-PGPUB; USPAT; EPO; DERWENT; IBM_TDB	OR	ON	2012/05/03 14:07
S46	2202	type with switch with (touch tap) and @ay<="2002"	US-PGPUB; USPAT; EPO; DERWENT; IBM_TDB	OR	ON	2012/05/03 14:07
S47	57	(application file app icon) with type with switch with (touch tap) and @ay<="2002"	US-PGPUB; USPAT; EPO; DERWENT; IBM_TDB	OR	ON	2012/05/03 14:07
S48	46	(application file app icon) near switch with (touch tap) and @ay<="2002"	US-PGPUB; USPAT; EPO; DERWENT; IBM_TDB	OR	ON	2012/05/03 14:08
S49	39263	(application file app icon) with (second near2 (set subset)) switch with (touch tap) and @ay<="2002"	US-PGPUB; USPAT; EPO; DERWENT; IBM_TDB	OR	ON	2012/05/03 14:09
S50	13	(application file app icon) with (second near2 (set subset)) with (touch tap) and @ay<="2002"	US-PGPUB; USPAT; EPO; DERWENT; IBM_TDB	OR	ON	2012/05/03 14:09
S51	505	(application) with data with (second near2 (set subset)) and @ay<="2002"	US-PGPUB; USPAT; EPO; DERWENT; IBM_TDB	OR	ON	2012/05/03 14:13
S52	8	(application) with data with (second near2 (set subset)) with (switch) and @ay<="2002"	US-PGPUB; USPAT; EPO; DERWENT; IBM_TDB	OR	ON	2012/05/03 14:13
S53	0	(application) with data with (second near2 (set subset)) with (toggle) and @ay<="2002"	US-PGPUB; USPAT; EPO; DERWENT; IBM_TDB	OR	ON	2012/05/03 14:14
S54	41014	file near type (second near2 (set subset)) with (toggle) and @ay<="2002"	US-PGPUB; USPAT; EPO; DERWENT; IBM_TDB	OR	ON	2012/05/03 14:14
S55	0	file near type with (second near2	US-PGPUB;	OR	ON	2012/05/03

		(set subset)) with (toggle) and @ay<="2002"	USPAT; EPO; DERWENT; IBM_TDB			14:14
S56	2	file near type with (toggle) and @ay<="2002"	US-PGPUB; USPAT; EPO; DERWENT; IBM_TDB	OR	ON	2012/05/03 14:14
S57	44	file near type with (switch) and @ay<="2002"	US-PGPUB; USPAT; EPO; DERWENT; IBM_TDB	OR	ON	2012/05/03 14:15
S58	3	"20080120576"	US-PGPUB; USPAT; EPO; DERWENT; IBM_TDB	OR	ON	2012/05/03 17:57
S59	2	"20080198178"	US-PGPUB; USPAT; EPO; DERWENT; IBM_TDB	OR	ON	2012/05/03 18:00
S60	42	zoom with circ$8 with boundary	US-PGPUB; USPAT; EPO; DERWENT; IBM_TDB	OR	ON	2012/05/03 18:01
S61	22	zoom with circ$8 with boundary and @ay<="2001"	US-PGPUB; USPAT; EPO; DERWENT; IBM_TDB	OR	ON	2012/05/03 18:01
S62	26	zoom with circ$8 with boundary and @ay<="2003"	US-PGPUB; USPAT; EPO; DERWENT; IBM_TDB	OR	ON	2012/05/03 18:01
S63	0	zoom$7 with circ$8 with boundary and @ay<="2003" and "715"/$.ccls.	US-PGPUB; USPAT; EPO; DERWENT; IBM_TDB	OR	ON	2012/05/03 18:01
S64	0	zoom$7 with clockwise with boundary and @ay<="2003" and "715"/$.ccls.	US-PGPUB; USPAT; EPO; DERWENT; IBM_TDB	OR	ON	2012/05/03 18:02
S65	0	zoom$7 with clockwise same boundary and @ay<="2003" and "715"/$.ccls.	US-PGPUB; USPAT; EPO; DERWENT; IBM_TDB	OR	ON	2012/05/03 18:02
S66	2	zoom$7 with circ$7 same boundary and @ay<="2003" and "715"/$.ccls.	US-PGPUB; USPAT; EPO; DERWENT; IBM_TDB	OR	ON	2012/05/03 18:02
S67	5	zoom$7 with (clockwise radial circ$7)	US-PGPUB;	OR	ON	2012/05/03

		same2 (perimter boundary) and @ay<="2003" and "715"/$.ccls.	USPAT; EPO; DERWENT; IBM_TDB			18:04
S68	26	("20010009428" | "20020085037" | "20020101458" | "20020122072" | "20040021647" | "4931783" | "5276795" | "5581670" | "5627960" | "5634064" | "5638523" | "5666499" | "5689667" | "5760773" | "5798752" | "6037937" | "6097387" | "6118427" | "6246411" | "6262719" | "6369837" | "6549219" | "6865719" | "6918091" | "6938221" | "7058902").PN.	US-PGPUB; USPAT; USOCR	OR	ON	2012/05/03 18:05
S69	110	("5638523").URPN.	USPAT	OR	ON	2012/05/03 18:06
S70	0	lock with help with clock with setting	USPAT	OR	ON	2012/05/03 21:16
S71	1	"6346935".pn.	USPAT	OR	ON	2012/05/03 21:17
S72	6	"20040021643"	US-PGPUB; USPAT; EPO; JPO; DERWENT; IBM_TDB	OR	ON	2012/05/03 21:18
S73	2	"20020027549"	US-PGPUB; USPAT; EPO; JPO; DERWENT; IBM_TDB	OR	ON	2012/05/03 21:19
S74	0	profile with application with each with user	US-PGPUB; USPAT; EPO; JPO; DERWENT; IBM_TDB	OR	ON	2012/05/03 21:47
S75	16148	profile with application with user	US-PGPUB; USPAT; EPO; JPO; DERWENT; IBM_TDB	OR	ON	2012/05/03 21:47
S76	339	profile with application with multiple near3 user	US-PGPUB; USPAT; EPO; JPO; DERWENT; IBM_TDB	OR	ON	2012/05/03 21:47
S77	43	profile with application with multiple near3 user and "715"/$.ccls.	US-PGPUB; USPAT; EPO; JPO; DERWENT; IBM_TDB	OR	ON	2012/05/03 21:47
S78	1	profile with icons with multiple near3 user and "715"/$.ccls.	US-PGPUB; USPAT; EPO; JPO; DERWENT; IBM_TDB	OR	ON	2012/05/03 21:51
S79	38	(application software program apps widgets) with multiple near3 user near3 profile and "715"/$.ccls.	US-PGPUB; USPAT; EPO; JPO; DERWENT;	OR	ON	2012/05/03 21:52

			IBM_TDB			
S80	2	"5914709".pn.	US-PGPUB; USPAT; EPO; JPO; DERWENT; IBM_TDB	OR	ON	2012/05/03 22:05
S81	2	"6292179".pn.	US-PGPUB; USPAT; EPO; JPO; DERWENT; IBM_TDB	OR	ON	2012/05/03 22:05
S82	2	"5618232".pn.	US-PGPUB; USPAT; EPO; JPO; DERWENT; IBM_TDB	OR	ON	2012/05/03 22:06
S83	2	"20050253818"	US-PGPUB; USPAT; EPO; JPO; DERWENT; IBM_TDB	OR	ON	2012/05/03 22:06
S84	2	"7030861".pn.	US-PGPUB; USPAT; EPO; JPO; DERWENT; IBM_TDB	OR	ON	2012/05/03 22:07
S85	2	"5603053".pn.	US-PGPUB; USPAT; EPO; JPO; DERWENT; IBM_TDB	OR	ON	2012/05/03 22:07
S86	64	"240336"	US-PGPUB; USPAT; EPO; DERWENT; IBM_TDB	OR	ON	2012/05/03 22:31
S87	2	"240336"	EPO	OR	ON	2012/05/03 22:31
S88	1	"20070252822"	US-PGPUB; USPAT; USOCR	OR	ON	2012/05/09 09:52
S89	1	"20100056221"	US-PGPUB; USPAT; USOCR	OR	ON	2012/05/09 10:00
S90	3	"7475333"	US-PGPUB; USPAT; USOCR	OR	ON	2012/05/09 11:08
S91	1	"20060236264"	US-PGPUB; USPAT; USOCR	OR	ON	2012/05/09 14:13
S92	1	"5933141".pn.	US-PGPUB; USPAT; USOCR	OR	ON	2012/05/09 14:28
S93	1	"20090328122"	US-PGPUB; USPAT; USOCR	OR	ON	2012/05/09 15:05
S94	1	"20080261569"	US-PGPUB; USPAT;	OR	ON	2012/05/09 15:29

			USOCR			
S95	1	"7797226".pn.	US-PGPUB; USPAT; USOCR	OR	ON	2012/05/09 15:57
S96	1	"5347295".pn.	US-PGPUB; USPAT; USOCR	OR	ON	2012/05/10 13:54
S97	1	"5491495".pn.	US-PGPUB; USPAT; USOCR	OR	ON	2012/05/10 14:19
S98	1	"6954904".pn.	US-PGPUB; USPAT; USOCR	OR	ON	2012/05/10 18:16
S99	561	simics	US-PGPUB; USPAT; USOCR	OR	ON	2012/05/10 19:13
S100	1	simics and virtutech.as.	US-PGPUB; USPAT; USOCR	OR	ON	2012/05/10 19:13
S101	3	simics and "715"/$.ccls.	US-PGPUB; USPAT; USOCR	OR	ON	2012/05/10 19:13
S102	10	swipe with home near screen	US-PGPUB; USPAT; EPO; DERWENT; IBM_TDB	OR	ON	2012/09/11 15:10
S103	42	(gesture glide flick swipe) with home near screen	US-PGPUB; USPAT; EPO; DERWENT; IBM_TDB	OR	ON	2012/09/11 15:11
S104	0	(gesture glide flick swipe) with home near screen and @ay<="2002"	US-PGPUB; USPAT; EPO; DERWENT; IBM_TDB	OR	ON	2012/09/11 15:12
S105	99	(gesture glide flick swipe) with home and @ay<="2002"	US-PGPUB; USPAT; EPO; DERWENT; IBM_TDB	OR	ON	2012/09/11 15:12
S106	16	("5500935" | "5760773" | "20060267966" | "20050050476" | "20040021643" | "20050134578" | "5926178" | "20050190147").PN.	US-PGPUB; USPAT; EPO; DERWENT; IBM_TDB	OR	ON	2012/09/11 15:15
S107	453	activat$7 with home near3 (state screen)	US-PGPUB; USPAT; EPO; DERWENT; IBM_TDB	OR	ON	2012/09/11 15:21
S108	3	activat$7 with home near3 (state screen) with (gesture flick swipe finger glide)	US-PGPUB; USPAT; EPO; DERWENT; IBM_TDB	OR	ON	2012/09/11 15:21
S109	8615	activat$7 with (gesture flick swipe	US-PGPUB;	OR	ON	2012/09/11

		finger glide) and @ay<="2002"	USPAT; EPO; DERWENT; IBM_TDB			15:24
S110	50	activat$7 with (gesture flick swipe finger glide) with icon and @ay<="2002"	US-PGPUB; USPAT; EPO; DERWENT; IBM_TDB	OR	ON	2012/09/11 15:25
S111	5	("5345543" | "5347295" | "5386219" | "5398310" | "5404442").PN.	US-PGPUB; USPAT; USOCR	OR	ON	2012/09/11 15:33
S112	76	(start activat$7 switch) with (drag dragging slide sliding swiping gliding gesture flick swipe finger glide) with (home main idle start) near3 (screen page) and @ay<="2002"	US-PGPUB; USPAT; EPO; DERWENT; IBM_TDB	OR	ON	2012/09/11 15:40
S113	101	(start activat$7 switch) with (drag dragging slide sliding swiping gliding gesture flick swipe finger glide stroke) with (home main idle start) near3 (screen page) and @ay<="2002"	US-PGPUB; USPAT; EPO; DERWENT; IBM_TDB	OR	ON	2012/09/11 15:47
S114	2	"7657849".pn.	US-PGPUB; USPAT; EPO; DERWENT; IBM_TDB	OR	ON	2012/09/11 15:49
S115	47	("20010011308" | "20010012022" | "20020015024" | "20020196274" | "20030142138" | "20040030934" | "20040034801" | "20040085351" | "20040088568" | "20040230843" | "20040250138" | "20040260955" | "20040268267" | "20050050477" | "20050060554" | "20050079896" | "20050212760" | "20050216862" | "20050248542" | "20050253817" | "20050264833" | "20060174339" | "20060267955" | "20080034292" | "20080072172" | "5465084" | "5559961" | "5677710" | "5821933" | "5907327" | "6151208" | "6160555" | "6192478" | "6249606" | "6323846" | "6347290" | "6421453" | "6570557" | "6573883" | "6633310" | "6677932" | "6720860" | "6735695" | "7124433" | "7151843" | "7174462" | "7263670").PN.	US-PGPUB; USPAT; USOCR	OR	ON	2012/09/11 15:49
S116	0	(shortcut) with (drag dragging slide sliding swiping gliding gesture flick swipe finger glide stroke) with (home main idle start) near3 (screen page) and @ay<="2002"	US-PGPUB; USPAT; EPO; DERWENT; IBM_TDB	OR	ON	2012/09/11 15:56
S117	0	(short$cut) with (drag dragging slide sliding swiping gliding gesture flick swipe finger glide stroke) with (home main idle start) near3 (screen page) and @ay<="2002"	US-PGPUB; USPAT; EPO; DERWENT; IBM_TDB	OR	ON	2012/09/11 15:56
S118	114	(short$cut) with (drag dragging slide	US-PGPUB;	OR	ON	2012/09/11

		sliding swiping gliding gesture flick swipe finger glide stroke) and @ay<="2002"	USPAT; EPO; DERWENT; IBM_TDB			15:56
S119	2	"20080010294"	US-PGPUB; USPAT; EPO; DERWENT; IBM_TDB	OR	ON	2012/09/12 11:58
S120	766	(trend trending) with tag	US-PGPUB; USPAT; EPO; DERWENT; IBM_TDB	OR	ON	2012/09/12 12:05
S121	20	(trend trending) with tag and "715"/$.ccls.	US-PGPUB; USPAT; EPO; DERWENT; IBM_TDB	OR	ON	2012/09/12 12:05
S122	3	(trend trending) with tag same (alert notif$7 indicat$7) and "715"/$.ccls.	US-PGPUB; USPAT; EPO; DERWENT; IBM_TDB	OR	ON	2012/09/12 12:07
S123	2	"20090292723"	US-PGPUB; USPAT; EPO; DERWENT; IBM_TDB	OR	ON	2012/09/12 14:14
S124	3	"20080178067"	US-PGPUB; USPAT; EPO; DERWENT; IBM_TDB	OR	ON	2012/09/12 14:22
S125	107	"5276785"	US-PGPUB; USPAT; EPO; DERWENT; IBM_TDB	OR	ON	2012/09/13 12:24
S126	2	"5276785".pn.	US-PGPUB; USPAT; EPO; DERWENT; IBM_TDB	OR	ON	2012/09/13 12:24
S127	3	"20080040668"	US-PGPUB; USPAT; EPO; DERWENT; IBM_TDB	OR	ON	2012/09/13 12:59
S128	25	email with automatic with (greetin signature)	US-PGPUB; USPAT; EPO; DERWENT; IBM_TDB	OR	ON	2012/09/13 13:15
S129	59	email with automatic with (greeting signature)	US-PGPUB; USPAT; EPO; DERWENT; IBM_TDB	OR	ON	2012/09/13 13:18
S130	3	"20080040668"	US-PGPUB;	OR	ON	2012/09/13

			USPAT; EPO; DERWENT; IBM_TDB			13:35
S131	2	"20100191701"	US-PGPUB; USPAT; EPO; DERWENT; IBM_TDB	OR	ON	2012/09/13 13:35
S132	2	"20100191701"	US-PGPUB; USPAT; EPO; DERWENT; IBM_TDB	OR	ON	2012/09/13 13:41
S133	3	"20070263822"	US-PGPUB; USPAT; EPO; DERWENT; IBM_TDB	OR	ON	2012/09/13 14:56
S134	2	"20080082627"	US-PGPUB; USPAT; EPO; DERWENT; IBM_TDB	OR	ON	2012/09/13 15:31
S135	2	"20060149630"	US-PGPUB; USPAT; EPO; DERWENT; IBM_TDB	OR	ON	2012/09/13 15:31
S136	101	(start activat$7 switch launch) with (drag dragging slide sliding swiping gliding gesture flick swipe finger glide stroke) with (home main idle start) near3 (screen page) and @ay<="2002"	US-PGPUB; USPAT; EPO; DERWENT; IBM_TDB	OR	ON	2012/09/14 10:44
S137	364	(start activat$7 switch launch) with (drag dragging slide sliding swiping gliding gesture flick swipe glide stroke) with (icon) and @ay<="2002"	US-PGPUB; USPAT; EPO; DERWENT; IBM_TDB	OR	ON	2012/09/14 10:51
S138	2225	(start activat$7 switch launch) with (drag dragging slide sliding swiping gliding gesture flick swipe glide stroke) with (edge) and @ay<="2002"	US-PGPUB; USPAT; EPO; DERWENT; IBM_TDB	OR	ON	2012/09/14 10:58
S139	5	(start activat$7 switch launch) with (drag dragging slide sliding swiping gliding gesture flick swipe glide stroke) with (edge corner) near screen and @ay<="2002"	US-PGPUB; USPAT; EPO; DERWENT; IBM_TDB	OR	ON	2012/09/14 10:59
S140	11	(start activat$7 switch launch) with (drag dragging slide sliding swiping gliding gesture flick swipe glide stroke) with (edge corner) near3 screen and @ay<="2002"	US-PGPUB; USPAT; EPO; DERWENT; IBM_TDB	OR	ON	2012/09/14 11:00
S141	30	(start activat$7 switch launch) with (drag dragging slide sliding swiping gliding gesture flick swipe glide stroke) with (edge corner) and "715"/$.ccls. and @ay<="2002"	US-PGPUB; USPAT; EPO; DERWENT; IBM_TDB	OR	ON	2012/09/14 11:03

S142	16	("20020063696" | "20020109677" | "5644628" | "5745116" | "5943039" | "6037937" | "6310610" | "6618063").PN.	US-PGPUB; USPAT; EPO; DERWENT; IBM_TDB	OR	ON	2012/09/14 11:54
S143	2	("8127141").PN.	US-PGPUB; USPAT; EPO; DERWENT; IBM_TDB	OR	ON	2012/09/14 12:02
S144	2	swipe near gesture and @ay<="2002"	US-PGPUB; USPAT; EPO; DERWENT; IBM_TDB	OR	ON	2012/09/14 12:03
S145	1141	(start activat$7 switch launch) with (drag dragging slide sliding swiping gliding gesture flick swipe glide stroke) and "715"/$.ccls. and @ay<="2002"	US-PGPUB; USPAT; EPO; DERWENT; IBM_TDB	OR	ON	2012/09/14 12:10
S146	437	(activat$7 switch launch) with (slide sliding swiping gliding gesture flick swipe glide stroke) and "715"/$.ccls. and @ay<="2002"	US-PGPUB; USPAT; EPO; DERWENT; IBM_TDB	OR	ON	2012/09/14 12:10
S147	350	(activat$7 switch launch) with (slide sliding swiping gliding flick swipe glide stroke) and "715"/$.ccls. and @ay<="2002"	US-PGPUB; USPAT; EPO; DERWENT; IBM_TDB	OR	ON	2012/09/14 12:11
S148	206	(activat$7 switch launch) with (slide sliding swiping gliding flick swipe glide) and "715"/$.ccls. and @ay<="2002"	US-PGPUB; USPAT; EPO; DERWENT; IBM_TDB	OR	ON	2012/09/14 12:11
S149	56	(activat$7 switch launch) with (sliding swiping gliding flick swipe glide) and "715"/$.ccls. and @ay<="2002"	US-PGPUB; USPAT; EPO; DERWENT; IBM_TDB	OR	ON	2012/09/14 12:11
S150	0	(activat$7 switch launch) with (sliding swiping gliding flick swipe glide) same desk with accessories and "715"/$.ccls. and @ay<="2002"	US-PGPUB; USPAT; EPO; DERWENT; IBM_TDB	OR	ON	2012/09/14 15:31
S151	0	(activat$7 switch launch) with (sliding swiping gliding flick swipe glide) same desk with "accessories." and @ay<="2002"	US-PGPUB; USPAT; EPO; DERWENT; IBM_TDB	OR	ON	2012/09/14 15:31
S152	1	(activat$7 switch launch) with (sliding swiping gliding flick swipe glide) same desk with accessories and @ay<="2002"	US-PGPUB; USPAT; EPO; DERWENT; IBM_TDB	OR	ON	2012/09/14 15:31
S153	14905	"swipe!"	US-PGPUB; USPAT; EPO; DERWENT; IBM_TDB	OR	ON	2012/09/14 15:31

S154	0	"swipe" with DA	US-PGPUB; USPAT; EPO; DERWENT; IBM_TDB	OR	ON	2012/09/14 15:32
S155	0	"swipe" with Desk near accessor$6	US-PGPUB; USPAT; EPO; DERWENT; IBM_TDB	OR	ON	2012/09/14 15:32
S156	0	launch with desk near accessor$6	US-PGPUB; USPAT; EPO; DERWENT; IBM_TDB	OR	ON	2012/09/14 15:32
S157	0	shortcut with (sliding swiping gliding flick swipe glide) and "715"/$.ccls. and @ay<="2002"	US-PGPUB; USPAT; EPO; DERWENT; IBM_TDB	OR	ON	2012/09/14 15:33
S158	2	short$cut with (sliding swiping gliding flick swipe glide) and "715"/$.ccls. and @ay<="2002"	US-PGPUB; USPAT; EPO; DERWENT; IBM_TDB	OR	ON	2012/09/14 15:34
S159	1007	(home desktop) with (sliding swiping gliding flick swipe glide) and @ay<="2002"	US-PGPUB; USPAT; EPO; DERWENT; IBM_TDB	OR	ON	2012/09/17 12:55
S160	8	(home desktop) with (sliding swiping gliding flick swipe glide) and @ay<="2002" and "715"/$.ccls.	US-PGPUB; USPAT; EPO; DERWENT; IBM_TDB	OR	ON	2012/09/17 12:55
S161	0	(home desktop) with (sliding swiping gliding flick swipe glide) with (activat$6 launch short$cut) and @ay<="2002" and "715"/$.ccls.	US-PGPUB; USPAT; EPO; DERWENT; IBM_TDB	OR	ON	2012/09/17 13:31
S162	17	(home desktop) with (sliding swiping gliding flick swipe glide) with (activat$6 launch short$cut) and @ay<="2002"	US-PGPUB; USPAT; EPO; DERWENT; IBM_TDB	OR	ON	2012/09/17 13:31
S163	27	(sliding swiping gliding flick swipe glide) with (activat$6 launch short$cut) and @ay<="2002" and "715"/$.ccls.	US-PGPUB; USPAT; EPO; DERWENT; IBM_TDB	OR	ON	2012/09/17 13:32
S164	81	"5886697"	US-PGPUB; USPAT; EPO; DERWENT; IBM_TDB	OR	ON	2012/09/17 13:50
S165	2	"5886697".pn.	US-PGPUB; USPAT; EPO; DERWENT; IBM_TDB	OR	ON	2012/09/17 13:50

S166	19034809	(activat$7 switch launch) with (app application software icon) with "not" with (click tap)@ay<="2002"	US-PGPUB; USPAT; EPO; DERWENT; IBM_TDB	OR	ON	2012/09/17 14:46
S167	0	(activat$7 switch launch) with (app application software icon) with "not" with (click tap) and @ay<="2002"	US-PGPUB; USPAT; EPO; DERWENT; IBM_TDB	OR	ON	2012/09/17 14:46
S168	0	(activat$7 switch launch) with "not" with (click tap) and @ay<="2002"	US-PGPUB; USPAT; EPO; DERWENT; IBM_TDB	OR	ON	2012/09/17 14:46
S169	0	(activat$7 switch launch) with "not" with (click clicking tap tapping) and @ay<="2002"	US-PGPUB; USPAT; EPO; DERWENT; IBM_TDB	OR	ON	2012/09/17 14:46
S170	0	(activat$7 launch) with "not" with (click clicking tap tapping) and @ay<="2002"	US-PGPUB; USPAT; EPO; DERWENT; IBM_TDB	OR	ON	2012/09/17 14:47
S171	135	(activat$7 launch) with (alone "not" "without") with (click clicking tap tapping) and @ay<="2002"	US-PGPUB; USPAT; EPO; DERWENT; IBM_TDB	OR	ON	2012/09/17 14:47
S172	23	("20020087661" | "20030200505" | "5600778" | "5689667" | "5721853" | "5745116" | "5790115" | "5805167" | "6028271" | "6057844" | "6094197" | "6101498" | "6104400" | "6239803" | "6337698" | "6429846" | "6445383" | "6496206" | "6618063" | "6707443" | "6819345" | "6915489" | "7003734").PN.	US-PGPUB; USPAT; USOCR	OR	ON	2012/09/17 15:04
S173	16	("20020063696" | "20020109677" | "5745116" | "5943039" | "6037937" | "6310610" | "6618063" | "7199786").PN.	US-PGPUB; USPAT; EPO; DERWENT; IBM_TDB	OR	ON	2013/02/21 12:48
S174	2	"5406307".pn.	US-PGPUB; USPAT; EPO; DERWENT; IBM_TDB	OR	ON	2013/02/21 12:51
S175	166	(home) near (screen state) with transition	US-PGPUB; USPAT; EPO; DERWENT; IBM_TDB	OR	ON	2013/02/21 13:14
S176	31	(home) near (screen state) with transition and "715"/$.ccls.	US-PGPUB; USPAT; EPO; DERWENT; IBM_TDB	OR	ON	2013/02/21 13:27

S177	2	"8127141".pn.	US-PGPUB; USPAT; EPO; DERWENT; IBM_TDB	OR	ON	2013/02/21 13:30
S178	10	("20010009583" | "5465084" | "5588056" | "5699514" | "5928364" | "5991882" | "6212638" | "6253248" | "6574377" | "7219368").PN.	US-PGPUB; USPAT; USOCR	OR	ON	2013/02/21 13:31
S179	467	disable near touch	US-PGPUB; USPAT; USOCR	OR	ON	2013/02/21 13:33
S180	3422	"20080903"	US-PGPUB; USPAT; USOCR	OR	ON	2013/02/21 13:39
S181	3289	"20080903"	EPO	OR	ON	2013/02/21 13:39
S182	0	"200800903"	EPO	OR	ON	2013/02/21 13:39
S183	0	"200800903"	US-PGPUB; USPAT; EPO; IBM_TDB	OR	ON	2013/02/21 13:39
S184	0	"2007150842"	US-PGPUB; USPAT; EPO; IBM_TDB	OR	ON	2013/02/21 13:40
S185	2	"20070150842"	US-PGPUB; USPAT; EPO; IBM_TDB	OR	ON	2013/02/21 13:40
S186	0	"20050322549"	US-PGPUB; USPAT; EPO; IBM_TDB	OR	ON	2013/02/21 13:41
S187	0	"200500322549"	US-PGPUB; USPAT; EPO; IBM_TDB	OR	ON	2013/02/21 13:41
S188	0	"20050322549"	US-PGPUB; USPAT; EPO; DERWENT; IBM_TDB	OR	ON	2013/02/21 13:41
S189	34	"6392999"	US-PGPUB; USPAT; EPO; DERWENT; IBM_TDB	OR	ON	2013/02/21 13:46
S190	2	"6392999".pn.	US-PGPUB; USPAT; EPO; DERWENT; IBM_TDB	OR	ON	2013/02/21 13:46
S191	2	"5619555".pn.	US-PGPUB; USPAT; EPO; DERWENT;	OR	ON	2013/02/21 13:48

			IBM_TDB			
S192	69	"5644628"	US-PGPUB; USPAT; EPO; DERWENT; IBM_TDB	OR	ON	2013/02/21 13:49
S193	2	"5644628".pn.	US-PGPUB; USPAT; EPO; DERWENT; IBM_TDB	OR	ON	2013/02/21 13:49
S194	2	"5701340".pn.	US-PGPUB; USPAT; EPO; DERWENT; IBM_TDB	OR	ON	2013/02/21 13:49
S195	2	"6570557".pn.	US-PGPUB; USPAT; EPO; DERWENT; IBM_TDB	OR	ON	2013/02/21 13:50
S196	0	"67271932".pn.	US-PGPUB; USPAT; EPO; DERWENT; IBM_TDB	OR	ON	2013/02/21 13:57
S197	141	(UI GUI) with lock and "715"/$.ccls.	US-PGPUB; USPAT; EPO; DERWENT; IBM_TDB	OR	ON	2013/02/21 14:04
S198	34	(UI GUI) with lock and "715"/$.ccls. and @ay<="2002"	US-PGPUB; USPAT; EPO; DERWENT; IBM_TDB	OR	ON	2013/02/21 14:09
S199	147	(UI GUI screen) with lock and "715"/$.ccls. and @ay<="2002"	US-PGPUB; USPAT; EPO; DERWENT; IBM_TDB	OR	ON	2013/02/21 14:09
S200	6	(UI GUI screen) with (unlock lock) same (gesture slide glide swipe) and "715"/$.ccls. and @ay<="2002"	US-PGPUB; USPAT; EPO; DERWENT; IBM_TDB	OR	ON	2013/02/21 14:10
S201	11	(UI GUI screen state) with (home) same (gesture slide glide swipe) and "715"/$.ccls. and @ay<="2002"	US-PGPUB; USPAT; EPO; DERWENT; IBM_TDB	OR	ON	2013/02/21 14:15
S202	44	(UI GUI screen state) with (main home) same (gesture slide glide swipe) and "715"/$.ccls. and @ay<="2002"	US-PGPUB; USPAT; EPO; DERWENT; IBM_TDB	OR	ON	2013/02/21 14:15
S203	2	(UI GUI screen state) with (unlock) same (gesture slide glide swipe) and "715"/$.ccls. and @ay<="2002"	US-PGPUB; USPAT; EPO; DERWENT;	OR	ON	2013/02/21 14:23

			IBM_TDB			
S204	39	(UI GUI screen state) with (unlock) and "715"/$.ccls. and @ay<="2002"	US-PGPUB; USPAT; EPO; DERWENT; IBM_TDB	OR	ON	2013/02/21 14:27
S205	236	(UI GUI screen state) with (lock) and "715"/$.ccls. and @ay<="2002"	US-PGPUB; USPAT; EPO; DERWENT; IBM_TDB	OR	ON	2013/02/21 14:27
S206	0	(UI GUI screen state) with (lock) with remove and "715"/$.ccls. and @ay<="2002"	US-PGPUB; USPAT; EPO; DERWENT; IBM_TDB	OR	ON	2013/02/21 14:27
S207	236	(UI GUI screen state) with (lock) and "715"/$.ccls. and @ay<="2002"	US-PGPUB; USPAT; EPO; DERWENT; IBM_TDB	OR	ON	2013/02/21 14:27
S208	2	(UI GUI screen state) with (lock) with blank and "715"/$.ccls. and @ay<="2002"	US-PGPUB; USPAT; EPO; DERWENT; IBM_TDB	OR	ON	2013/02/21 14:28
S209	236	(UI GUI screen state) with (lock) and "715"/$.ccls. and @ay<="2002"	US-PGPUB; USPAT; EPO; DERWENT; IBM_TDB	OR	ON	2013/02/21 14:30
S210	2	"6812940".pn.	US-PGPUB; USPAT; EPO; DERWENT; IBM_TDB	OR	ON	2013/02/21 14:54
S211	3	("4825019" | "5825353" | "6408191").PN.	US-PGPUB; USPAT; USOCR	OR	ON	2013/02/21 14:54
S212	5	(unlock) same (gesture slide glide swipe) and "715"/$.ccls. and @ay<="2002"	US-PGPUB; USPAT; EPO; DERWENT; IBM_TDB	OR	ON	2013/02/21 15:02
S213	17	(unlock) same2 (gesture slide glide swipe) and "715"/$.ccls. and @ay<="2002"	US-PGPUB; USPAT; EPO; DERWENT; IBM_TDB	OR	ON	2013/02/21 15:03
S214	32	(log$in) same2 (gesture slide glide swipe) and "715"/$.ccls. and @ay<="2002"	US-PGPUB; USPAT; EPO; DERWENT; IBM_TDB	OR	ON	2013/02/21 15:05
S215	2	(log$in) with (gesture slide glide swipe) and "715"/$.ccls. and @ay<="2002"	US-PGPUB; USPAT; EPO; DERWENT; IBM_TDB	OR	ON	2013/02/21 15:05

S216	93768	(log$in) with2 (gesture slide glide swipe) and "715"/$.ccls. and @ay<="2002"	US-PGPUB; USPAT; EPO; DERWENT; IBM_TDB	OR	ON	2013/02/21 15:06
S217	10	(log$in) same (gesture slide glide swipe) and "715"/$.ccls. and @ay<="2002"	US-PGPUB; USPAT; EPO; DERWENT; IBM_TDB	OR	ON	2013/02/21 15:06
S218	519381	grid (gesture slide glide swipe) and "715"/$.ccls. and @ay<="2002"	US-PGPUB; USPAT; EPO; DERWENT; IBM_TDB	OR	ON	2013/02/21 15:08
S219	15	grid with (gesture slide glide swipe) and "715"/$.ccls. and @ay<="2002"	US-PGPUB; USPAT; EPO; DERWENT; IBM_TDB	OR	ON	2013/02/21 15:08
S220	10198	expan$7 with vertical with horizontal	US-PGPUB; USPAT; EPO; DERWENT; IBM_TDB	OR	ON	2013/02/22 11:06
S221	13124	expan$7 with vertical$4 with horizontal$4	US-PGPUB; USPAT; EPO; DERWENT; IBM_TDB	OR	ON	2013/02/22 11:06
S222	250	expan$7 with vertical$4 with horizontal$4 and "715"/$.ccls.	US-PGPUB; USPAT; EPO; DERWENT; IBM_TDB	OR	ON	2013/02/22 11:06
S223	2	expan$7 with vertical$4 with horizontal$4 with toggle and "715"/$.ccls.	US-PGPUB; USPAT; EPO; DERWENT; IBM_TDB	OR	ON	2013/02/22 11:12
S224	3	expan$7 with vertical$4 with horizontal$4 with (switch toggle) and "715"/$.ccls.	US-PGPUB; USPAT; EPO; DERWENT; IBM_TDB	OR	ON	2013/02/22 11:14
S225	14	menu with vertical$4 with horizontal$4 with (switch toggle) and "715"/$.ccls.	US-PGPUB; USPAT; EPO; DERWENT; IBM_TDB	OR	ON	2013/02/22 11:15
S226	2	menu with inline with (switch toggle) and "715"/$.ccls.	US-PGPUB; USPAT; EPO; DERWENT; IBM_TDB	OR	ON	2013/02/22 11:21
S227	1	(pop$out side) with inline with (switch toggle) and "715"/$.ccls.	US-PGPUB; USPAT; EPO; DERWENT; IBM_TDB	OR	ON	2013/02/22 11:22

S228	1	(pop$out side) with inline with (switch toggle orientation) and "715"/$.ccls.	US-PGPUB; USPAT; EPO; DERWENT; IBM_TDB	OR	ON	2013/02/22 11:22
S229	12	(pop$out side) with expan$7 with (switch toggle orientation) and "715"/$.ccls.	US-PGPUB; USPAT; EPO; DERWENT; IBM_TDB	OR	ON	2013/02/22 11:24
S230	18	(horizontal vertical side) with expan$7 with (switch toggle orientation) and "715"/$.ccls.	US-PGPUB; USPAT; EPO; DERWENT; IBM_TDB	OR	ON	2013/02/22 11:25
S231	24	(horizontal$ vertical$ side) with expan$7 with (switch toggle orientation) and "715"/$.ccls.	US-PGPUB; USPAT; EPO; DERWENT; IBM_TDB	OR	ON	2013/02/22 11:25
S232	6	("2005/0149873").URPN.	USPAT	OR	ON	2013/02/22 11:26
S233	1	pitaro.xa,xp. and expan$7 with horizont$7	USPAT	OR	ON	2013/02/22 11:28
S234	68	pitaro.xa,xp. and expan$7	USPAT	OR	ON	2013/02/22 11:29
S235	34	pitaro.xa,xp. and (tree hiearch$6)	USPAT	OR	ON	2013/02/22 11:36
S236	36	pitaro.xa,xp. and horizont$5 with vertical$6	USPAT	OR	ON	2013/02/22 11:38
S237	36	tree same horizont$7 with vertical$7 with expan$7	USPAT	OR	ON	2013/02/22 11:40
S238	64	tree same horizont$7 with vertical$7 with expan$7	US-PGPUB; USPAT; DERWENT; IBM_TDB	OR	ON	2013/02/22 11:40
S239	16	tree same horizont$7 with vertical$7 with expan$7 and "715"/$.ccls.	US-PGPUB; USPAT; DERWENT; IBM_TDB	OR	ON	2013/02/22 11:41
S240	3	Pitaro.xa,xp. and pivot	US-PGPUB; USPAT; DERWENT; IBM_TDB	OR	ON	2013/02/22 11:41
S241	2124	(hierach$8 tree) with pivot	US-PGPUB; USPAT; DERWENT; IBM_TDB	OR	ON	2013/02/22 11:42
S242	8	(hierach$8 tree) with pivot and "715"/$.ccls.	US-PGPUB; USPAT; DERWENT; IBM_TDB	OR	ON	2013/02/22 11:42
S243	196	(hierach$8 tree) and pivot and "715"/$.ccls.	US-PGPUB; USPAT; DERWENT; IBM_TDB	OR	ON	2013/02/22 11:44
S244	28	(hierach$8 tree) and pivot near point and "715"/$.ccls.	US-PGPUB; USPAT;	OR	ON	2013/02/22 11:44

			DERWENT; IBM_TDB			
S245	3	(propagat$ interpolat$6 infer$8) with keyframes with (intermediate middle) and "715"/$.ccls.	US-PGPUB; USPAT; DERWENT; IBM_TDB	OR	ON	2013/02/22 11:51
S246	3	(propagat$ interpolat$6 infer$8) with key$frames with (intermediate middle) and "715"/$.ccls.	US-PGPUB; USPAT; DERWENT; IBM_TDB	OR	ON	2013/02/22 11:52
S247	13	(propagat$ interpolat$6 infer$8) with (((r representative key) near frame) key$frames) with (intermediate middle) and "715"/$.ccls.	US-PGPUB; USPAT; DERWENT; IBM_TDB	OR	ON	2013/02/22 11:53
S248	54	overlap$7 with window with resize	US-PGPUB; USPAT; DERWENT; IBM_TDB	OR	ON	2013/02/22 12:02
S249	0	overlap$7 with window with resize same threshold	US-PGPUB; USPAT; DERWENT; IBM_TDB	OR	ON	2013/02/22 12:02
S250	133	overlap$7 with (object element window) with (size resize) same threshold	US-PGPUB; USPAT; DERWENT; IBM_TDB	OR	ON	2013/02/22 12:02
S251	11	overlap$7 with (object element window) with (size resize) same threshold and "715"/$.ccls.	US-PGPUB; USPAT; DERWENT; IBM_TDB	OR	ON	2013/02/22 12:04
S252	3	overlap$7 with (object element window) with (overlap$6) near2 threshold and "715"/$.ccls.	US-PGPUB; USPAT; DERWENT; IBM_TDB	OR	ON	2013/02/22 12:15
S253	3	(object element window) with (overlap$6) near2 threshold and "715"/$.ccls.	US-PGPUB; USPAT; DERWENT; IBM_TDB	OR	ON	2013/02/22 12:15
S254	139	grid with application with icons	US-PGPUB; USPAT; DERWENT; IBM_TDB	OR	ON	2013/02/22 12:23
S255	0	grid with application with icons and "7156"/$.ccls.	US-PGPUB; USPAT; DERWENT; IBM_TDB	OR	ON	2013/02/22 12:23
S256	54	grid with application with icons and "715"/$.ccls.	US-PGPUB; USPAT; DERWENT; IBM_TDB	OR	ON	2013/02/22 12:23
S257	2	"20060041848"	US-PGPUB; USPAT; DERWENT; IBM_TDB	OR	ON	2013/02/22 13:41
S258	3	"20050039137"	US-PGPUB; USPAT; DERWENT; IBM_TDB	OR	ON	2013/02/22 13:42

S259	2	"20020015064".pn.	US-PGPUB; USPAT; DERWENT; IBM_TDB	OR	ON	2013/02/24 21:32
S260	2	"20020015064"	US-PGPUB; USPAT; DERWENT; IBM_TDB	OR	ON	2013/02/24 21:33
S261	817	(swipe) near gesture	US-PGPUB; USPAT; DERWENT; IBM_TDB	OR	ON	2013/02/24 21:49
S262	390	(swipe) near gesture and "715"/$.ccls.	US-PGPUB; USPAT; DERWENT; IBM_TDB	OR	ON	2013/02/24 21:49
S263	2	(swipe) near gesture and "715"/$.ccls. and @ay<="2002"	US-PGPUB; USPAT; DERWENT; IBM_TDB	OR	ON	2013/02/24 21:49
S264	5	(swipe slide glide) near gesture and "715"/$.ccls. and @ay<="2002"	US-PGPUB; USPAT; DERWENT; IBM_TDB	OR	ON	2013/02/24 21:51
S265	6	(swipe slide glide) near3 gesture and "715"/$.ccls. and @ay<="2002"	US-PGPUB; USPAT; DERWENT; IBM_TDB	OR	ON	2013/02/24 21:52
S266	16	(swipe slide glide) with gesture and "715"/$.ccls. and @ay<="2002"	US-PGPUB; USPAT; DERWENT; IBM_TDB	OR	ON	2013/02/24 21:52
S267	0	(swipe slide glide) with away with icon and "715"/$.ccls. and @ay<="2002"	US-PGPUB; USPAT; DERWENT; IBM_TDB	OR	ON	2013/02/24 21:56
S268	26793	application with icon	US-PGPUB; USPAT; EPO; DERWENT; IBM_TDB	OR	ON	2013/02/24 22:13
S269	1722	application with icon with bar	US-PGPUB; USPAT; EPO; DERWENT; IBM_TDB	OR	ON	2013/02/24 22:13
S270	657	application with icon with bar and "715"/$.ccls.	US-PGPUB; USPAT; EPO; DERWENT; IBM_TDB	OR	ON	2013/02/24 22:13
S271	183	application with icon with bar and "715"/$.ccls. and @ay<="2002"	US-PGPUB; USPAT; EPO; DERWENT; IBM_TDB	OR	ON	2013/02/24 22:14
S272	62	lock with path and "715"/$.ccls.	US-PGPUB; USPAT; EPO;	OR	ON	2013/02/24 22:15

			DERWENT; IBM_TDB			
S273	0	lock with path with trace and "715"/$.ccls.	US-PGPUB; USPAT; EPO; DERWENT; IBM_TDB	OR	ON	2013/02/24 22:18
S274	1	(unlock lock) with path with trace and "715"/$.ccls.	US-PGPUB; USPAT; EPO; DERWENT; IBM_TDB	OR	ON	2013/02/24 22:18
S275	12	(unlock lock) with trace and "715"/$.ccls.	US-PGPUB; USPAT; EPO; DERWENT; IBM_TDB	OR	ON	2013/02/24 22:20
S276	2	"5559961".pn.	US-PGPUB; USPAT; EPO; DERWENT; IBM_TDB	OR	ON	2013/02/24 22:30
S277	252	graphical near password	US-PGPUB; USPAT; EPO; DERWENT; IBM_TDB	OR	ON	2013/02/24 22:30
S278	37	graphical near password and "715"/$.ccls.	US-PGPUB; USPAT; EPO; DERWENT; IBM_TDB	OR	ON	2013/02/24 22:30
S279	13	graphical near password and "715"/$.ccls. and @ay<="2002"	US-PGPUB; USPAT; EPO; DERWENT; IBM_TDB	OR	ON	2013/02/24 22:31
S280	81	("5559961").URPN.	USPAT	OR	ON	2013/02/24 22:34
S281	10	("20020029341" | "20040085351" | "20040245352" | "5406307" | "5559961" | "5796183" | "6209104" | "6476797" | "6720860" | "6862687").PN.	US-PGPUB; USPAT; USOCR	OR	ON	2013/02/24 22:41
S282	1	"7818691".pn.	US-PGPUB; USPAT; USOCR	OR	ON	2013/02/24 22:49
S283	114	main near menu with bar and "715"/$.ccls. and @ay<="2002"	US-PGPUB; USPAT; EPO; DERWENT; IBM_TDB	OR	ON	2013/02/25 10:39
S284	0	main near menu with bar and "715"/864.ccls. and @ay<="2002"	US-PGPUB; USPAT; EPO; DERWENT; IBM_TDB	OR	ON	2013/02/25 10:42
S285	85	bar and "715"/864.ccls. and @ay<="2002"	US-PGPUB; USPAT;	OR	ON	2013/02/25 10:42

			EPO; DERWENT; IBM_TDB			
S286	146	mode and "715"/864.ccls. and @ay<="2002"	US-PGPUB; USPAT; EPO; DERWENT; IBM_TDB	OR	ON	2013/02/25 10:44

EAST Search History (Interference)

<This search history is empty>

2/25/2013 12:01:02 PM
C:\Users\rpitaro\Documents\EAST\Workspaces\13310755.wsp

PTO/SB/08a (01-10)
Approved for use through 07/31/2012. OMB 0651-0031
U.S. Patent and Trademark Office; U.S. DEPARTMENT OF COMMERCE

Under the Paperwork Reduction Act of 1995, no persons are required to respond to a collection of information unless it contains a valid OMB control number.

INFORMATION DISCLOSURE STATEMENT BY APPLICANT
(Not for submission under 37 CFR 1.99)

Application Number	13310755
Filing Date	2011-12-04
First Named Inventor	Magnus Goertz
Art Unit	2171
Examiner Name	Ryan F. Pitaro
Attorney Docket Number	NEONODE.P039

U.S.PATENTS Remove

Examiner Initial*	Cite No	Patent Number	Kind Code[1]	Issue Date	Name of Patentee or Applicant of cited Document	Pages,Columns,Lines where Relevant Passages or Relevant Figures Appear
/R.P./	1	5561758	A	1996-10-01	Hocker et al.	
/R.P./	2	5821933	A	1998-10-13	Keller et al.	
/R.P./	3	6925611	B2	2005-08-02	SanGiovanni	
/R.P./	4	7450114	B2	2008-11-11	Anwar	

If you wish to add additional U.S. Patent citation information please click the Add button. Add

U.S.PATENT APPLICATION PUBLICATIONS Remove

Examiner Initial*	Cite No	Publication Number	Kind Code[1]	Publication Date	Name of Patentee or Applicant of cited Document	Pages,Columns,Lines where Relevant Passages or Relevant Figures Appear
/R.P./	1	20010043198	A1	2001-11-22	Ludtke	
/R.P./	2	20040141010	A1	2004-07-22	Fitzmaurice et al.	Provisional application no. 60/419,144

If you wish to add additional U.S. Published Application citation information please click the Add button. Add

FOREIGN PATENT DOCUMENTS Remove

INFORMATION DISCLOSURE STATEMENT BY APPLICANT (Not for submission under 37 CFR 1.99)		
	Application Number	13310755
	Filing Date	2011-12-04
	First Named Inventor	Magnus Goertz
	Art Unit	2171
	Examiner Name	Ryan F. Pitaro
	Attorney Docket Number	NEONODE.P039

Examiner Initial*	Cite No	Foreign Document Number[3]	Country Code[2] i	Kind Code[4]	Publication Date	Name of Patentee or Applicant of cited Document	Pages,Columns,Lines where Relevant Passages or Relevant Figures Appear	T[5]
	1							☐

If you wish to add additional Foreign Patent Document citation information please click the Add button **Add**

NON-PATENT LITERATURE DOCUMENTS **Remove**

Examiner Initials*	Cite No	Include name of the author (in CAPITAL LETTERS), title of the article (when appropriate), title of the item (book, magazine, journal, serial, symposium, catalog, etc), date, pages(s), volume-issue number(s), publisher, city and/or country where published.	T[5]
/R.P./	1	Brad A. Myers, "Mobile Devices for Control", Mobile HCI 2002, F. Paterno (Ed.), LNCS 2411, pp. 1–8, 2002. Springer-Verlag, Berlin, Heidelberg.	☐
/R.P./	2	Brad A. Myers, Kin Pou Lie and Bo-Chieh Yang, "Two-Handed Input Using a PDA And a Mouse", CHI '2000, April 1-6, 2000, CHI Letters, Vol. 2, Issue 1, pp. 41-48, 2000, ACM, New York, NY, USA.	☐
/R.P./	3	Brad A. Myers, "Using Handhelds and PCs Together", Communications of the ACM, November 2001, Vol. 44, No. 11, pp. 34-41, ACM, New York, NY, USA.	☐
/R.P./	4	Gordon Kurtenbach and William Buxton, "User Learning and Performance with Marking Menus", CHI '94 Proceedings of the SIGCHI Conference on Human factors in Computing Systems, pp. 258-264, ACM, New York, NY, USA.	☐
/R.P./	5	Gordon Paul Kurtenbach, "The Design and Evaluation of Marking Menus", 1993. Doctoral Thesis, Graduate Department of Computer Science, University of Toronto.	☐
/R.P./	6	David A. Carr, "Specification of Interface Interaction Objects", CHI '94 Proceedings of the SIGCHI Conference on Human factors in Computing Systems, pp. 372-378, 1994, ACM, New York, NY, USA.	☐
/R.P./	7	David A. Carr, Ninad Jog, Harsha Prem Kumar, Marko Teittinen and Christopher Ahlberg, "Using Interaction Object Graphs to Specify Graphical Widgets", Tech. Rep. ISR-TR-94-69, September 1994, Institute for Systems Research, University of Maryland, College Park, MD.	☐

INFORMATION DISCLOSURE STATEMENT BY APPLICANT (Not for submission under 37 CFR 1.99)		
	Application Number	13310755
	Filing Date	2011-12-04
	First Named Inventor	Magnus Goertz
	Art Unit	2171
	Examiner Name	Ryan F. Pitaro
	Attorney Docket Number	NEONODE.P039

/R.P./	8	Catherine Plaisant and Daniel Wallace, "Touchscreen Toggle Switches: Push or Slide? Design Issues and Usability Study", Tech. Rep. CAR-TR-521, November, 1990, Human-Computer Interaction Laboratory,Center for Automation Research, Dept. of Psychology, University of Maryland, College Park, MD.	☐
/R.P./	9	Mark A. Tapia and Gordon Kurtenbach, "Some Design Refinements and Principles on the Appearance and Behavior of Marking Menus", UIST '95, pp. 189– 95, ACM New York, NY, USA.	☐
/R.P./	10	Michael McGuffin, Nicolas Burtnyk and Gordon Kurtenbach, "FaST Sliders: Integrating Marking Menus and the Adjustment of Continuous Values", Proc. Graphics Interface, May 2002, pp. 35-42.	☐

If you wish to add additional non-patent literature document citation information please click the Add button **Add**

EXAMINER SIGNATURE

Examiner Signature	/Ryan Pitaro/	Date Considered	02/25/2013

*EXAMINER: Initial if reference considered, whether or not citation is in conformance with MPEP 609. Draw line through a citation if not in conformance and not considered. Include copy of this form with next communication to applicant.

[1] See Kind Codes of USPTO Patent Documents at www.USPTO.GOV or MPEP 901.04. [2] Enter office that issued the document, by the two-letter code (WIPO Standard ST.3). [3] For Japanese patent documents, the indication of the year of the reign of the Emperor must precede the serial number of the patent document. [4] Kind of document by the appropriate symbols as indicated on the document under WIPO Standard ST.16 if possible. [5] Applicant is to place a check mark here if English language translation is attached.

INFORMATION DISCLOSURE STATEMENT BY APPLICANT (Not for submission under 37 CFR 1.99)		
	Application Number	13310755
	Filing Date	2011-12-04
	First Named Inventor	Magnus Goertz
	Art Unit	2171
	Examiner Name	Ryan F. Pitaro
	Attorney Docket Number	NEONODE.P039

CERTIFICATION STATEMENT

Please see 37 CFR 1.97 and 1.98 to make the appropriate selection(s):

☐ That each item of information contained in the information disclosure statement was first cited in any communication from a foreign patent office in a counterpart foreign application not more than three months prior to the filing of the information disclosure statement. See 37 CFR 1.97(e)(1).

OR

☐ That no item of information contained in the information disclosure statement was cited in a communication from a foreign patent office in a counterpart foreign application, and, to the knowledge of the person signing the certification after making reasonable inquiry, no item of information contained in the information disclosure statement was known to any individual designated in 37 CFR 1.56(c) more than three months prior to the filing of the information disclosure statement. See 37 CFR 1.97(e)(2).

☐ See attached certification statement.

☒ The fee set forth in 37 CFR 1.17 (p) has been submitted herewith.

☒ A certification statement is not submitted herewith.

SIGNATURE

A signature of the applicant or representative is required in accordance with CFR 1.33, 10.18. Please see CFR 1.4(d) for the form of the signature.

Signature	/Marc A. Berger/	Date (YYYY-MM-DD)	2012-10-01
Name/Print	Marc A. Berger	Registration Number	44029

This collection of information is required by 37 CFR 1.97 and 1.98. The information is required to obtain or retain a benefit by the public which is to file (and by the USPTO to process) an application. Confidentiality is governed by 35 U.S.C. 122 and 37 CFR 1.14. This collection is estimated to take 1 hour to complete, including gathering, preparing and submitting the completed application form to the USPTO. Time will vary depending upon the individual case. Any comments on the amount of time you require to complete this form and/or suggestions for reducing this burden, should be sent to the Chief Information Officer, U.S. Patent and Trademark Office, U.S. Department of Commerce, P.O. Box 1450, Alexandria, VA 22313-1450. DO NOT SEND FEES OR COMPLETED FORMS TO THIS ADDRESS. **SEND TO: Commissioner for Patents, P.O. Box 1450, Alexandria, VA 22313-1450.**

Privacy Act Statement

The Privacy Act of 1974 (P.L. 93-579) requires that you be given certain information in connection with your submission of the attached form related to a patent application or patent. Accordingly, pursuant to the requirements of the Act, please be advised that: (1) the general authority for the collection of this information is 35 U.S.C. 2(b)(2); (2) furnishing of the information solicited is voluntary; and (3) the principal purpose for which the information is used by the U.S. Patent and Trademark Office is to process and/or examine your submission related to a patent application or patent. If you do not furnish the requested information, the U.S. Patent and Trademark Office may not be able to process and/or examine your submission, which may result in termination of proceedings or abandonment of the application or expiration of the patent.

The information provided by you in this form will be subject to the following routine uses:

1. The information on this form will be treated confidentially to the extent allowed under the Freedom of Information Act (5 U.S.C. 552) and the Privacy Act (5 U.S.C. 552a). Records from this system of records may be disclosed to the Department of Justice to determine whether the Freedom of Information Act requires disclosure of these record s.

2. A record from this system of records may be disclosed, as a routine use, in the course of presenting evidence to a court, magistrate, or administrative tribunal, including disclosures to opposing counsel in the course of settlement negotiations.

3. A record in this system of records may be disclosed, as a routine use, to a Member of Congress submitting a request involving an individual, to whom the record pertains, when the individual has requested assistance from the Member with respect to the subject matter of the record.

4. A record in this system of records may be disclosed, as a routine use, to a contractor of the Agency having need for the information in order to perform a contract. Recipients of information shall be required to comply with the requirements of the Privacy Act of 1974, as amended, pursuant to 5 U.S.C. 552a(m).

5. A record related to an International Application filed under the Patent Cooperation Treaty in this system of records may be disclosed, as a routine use, to the International Bureau of the World Intellectual Property Organization, pursuant to the Patent Cooperation Treaty.

6. A record in this system of records may be disclosed, as a routine use, to another federal agency for purposes of National Security review (35 U.S.C. 181) and for review pursuant to the Atomic Energy Act (42 U.S.C. 218(c)).

7. A record from this system of records may be disclosed, as a routine use, to the Administrator, General Services, or his/her designee, during an inspection of records conducted by GSA as part of that agency's responsibility to recommend improvements in records management practices and programs, under authority of 44 U.S.C. 2904 and 2906. Such disclosure shall be made in accordance with the GSA regulations governing inspection of records for this purpose, and any other relevant (i.e., GSA or Commerce) directive. Such disclosure shall not be used to make determinations about individuals.

8. A record from this system of records may be disclosed, as a routine use, to the public after either publication of the application pursuant to 35 U.S.C. 122(b) or issuance of a patent pursuant to 35 U.S.C. 151. Further, a record may be disclosed, subject to the limitations of 37 CFR 1.14, as a routine use, to the public if the record was filed in an application which became abandoned or in which the proceedings were terminated and which application is referenced by either a published application, an application open to public inspections or an issued patent.

9. A record from this system of records may be disclosed, as a routine use, to a Federal, State, or local law enforcement agency, if the USPTO becomes aware of a violation or potential violation of law or regulation.

Search Notes	Application/Control No.	Applicant(s)/Patent Under Reexamination
	13310755	GOERTZ, MAGNUS
	Examiner	Art Unit
	RYAN PITARO	2171

CPC- SEARCHED		
Symbol	Date	Examiner

CPC COMBINATION SETS - SEARCHED		
Symbol	Date	Examiner

US CLASSIFICATION SEARCHED			
Class	Subclass	Date	Examiner

SEARCH NOTES		
Search Notes	Date	Examiner
EAST	5/3/2012	RFP
Internet	5/3/2012	RFP
Inventor Name	5/3/2012	RFP
IEEE	5/3/2012	RFP
Update Search	9/17/2012	RFP
Update Search	2/22/2013	RFP

INTERFERENCE SEARCH			
US Class/ CPC Symbol	US Subclass / CPC Group	Date	Examiner

Index of Claims	Application/Control No.	Applicant(s)/Patent Under Reexamination
	13310755	GOERTZ, MAGNUS
	Examiner	Art Unit
	RYAN PITARO	2171

✓	Rejected	-	Cancelled	N	Non-Elected	A	Appeal
=	Allowed	÷	Restricted	I	Interference	O	Objected

☐ Claims renumbered in the same order as presented by applicant ☐ CPA ☐ T.D. ☐ R.1.47

CLAIM		DATE								
Final	Original	05/03/2012	09/17/2012	02/25/2013						
	1	-	-	-						
	2	-	-	-						
	3	-	-	-						
	4	-	-	-						
	5	-	-	-						
	6	-	-	-						
	7	-	-	-						
	8	-	-	-						
	9	-	-	-						
	10	-	-	-						
	11	-	-	-						
	12	-	-	-						
	13	-	-	-						
	14	-	-	-						
	15	-	-	-						
	16	-	-	-						
	17	-	-	-						
	18	-	-	-						
	19	✓	N	N						
	20	✓	N	N						
	21	✓	✓	✓						
	22	✓	-	-						
	23	✓	-	-						
	24	✓	-	-						
	25	✓	-	-						
	26	✓	-	-						
	27	✓	-	-						
	28	✓	N	N						
	29	✓	N	N						
	30	✓	N	N						
	31	✓	N	N						
	32	✓	N	N						
	33	✓	N	N						
	34	✓	N	N						
	35	✓	N	N						
	36	✓	N	N						

Index of Claims	Application/Control No.	Applicant(s)/Patent Under Reexamination
	13310755	GOERTZ, MAGNUS
	Examiner	**Art Unit**
	RYAN PITARO	2171

✓	Rejected	-	Cancelled	N	Non-Elected	A	Appeal
=	Allowed	÷	Restricted	I	Interference	O	Objected

☐ Claims renumbered in the same order as presented by applicant ☐ CPA ☐ T.D. ☐ R.1.47

CLAIM		DATE								
Final	Original	05/03/2012	09/17/2012	02/25/2013						
	37		✓	✓						
	38		✓	-						
	39		✓	✓						
	40		✓	✓						
	41		✓	✓						
	42		✓	✓						

PTO/SB/08a (01-10)
Approved for use through 07/31/2012. OMB 0651-0031
U.S. Patent and Trademark Office; U.S. DEPARTMENT OF COMMERCE

Under the Paperwork Reduction Act of 1995, no persons are required to respond to a collection of information unless it contains a valid OMB control number.

INFORMATION DISCLOSURE STATEMENT BY APPLICANT
(Not for submission under 37 CFR 1.99)

Application Number	13310755
Filing Date	2011-12-04
First Named Inventor	Magnus Goertz
Art Unit	2171
Examiner Name	Ryan F. Pitaro
Attorney Docket Number	NEONODE.P039

U.S.PATENTS Remove

Examiner Initial*	Cite No	Patent Number	Kind Code[1]	Issue Date	Name of Patentee or Applicant of cited Document	Pages,Columns,Lines where Relevant Passages or Relevant Figures Appear
/R.P./	1	5745116	A	1998-04-28	Pisutha-Arnond	
/R.P./	2	5943039	A	1999-08-24	Anderson et al.	
/R.P./	3	6037937	A	2000-03-14	Beaton et al.	
/R.P./	4	6310610	B1	2001-10-30	Beaton et al.	
/R.P./	5	6618063	B1	2003-09-09	Kurtenbach	
/R.P./	6	7199786	B2	2007-04-03	Suraqui	

If you wish to add additional U.S. Patent citation information please click the Add button. Add

U.S.PATENT APPLICATION PUBLICATIONS Remove

Examiner Initial*	Cite No	Publication Number	Kind Code[1]	Publication Date	Name of Patentee or Applicant of cited Document	Pages,Columns,Lines where Relevant Passages or Relevant Figures Appear

INFORMATION DISCLOSURE STATEMENT BY APPLICANT (Not for submission under 37 CFR 1.99)		
	Application Number	13310755
	Filing Date	2011-12-04
	First Named Inventor	Magnus Goertz
	Art Unit	2171
	Examiner Name	Ryan F. Pitaro
	Attorney Docket Number	NEONODE.P039

/R.P./	1	20020063696	A1	2002-05-30	Kubo et al.	
/R.P./	2	20020109677	A1	2002-08-15	Taylor	

If you wish to add additional U.S. Published Application citation information please click the Add button. Add

FOREIGN PATENT DOCUMENTS Remove

Examiner Initial*	Cite No	Foreign Document Number[3]	Country Code[2] i	Kind Code[4]	Publication Date	Name of Patentee or Applicant of cited Document	Pages,Columns,Lines where Relevant Passages or Relevant Figures Appear	T[5]
	1							☐

If you wish to add additional Foreign Patent Document citation information please click the Add button Add

NON-PATENT LITERATURE DOCUMENTS Remove

Examiner Initials*	Cite No	Include name of the author (in CAPITAL LETTERS), title of the article (when appropriate), title of the item (book, magazine, journal, serial, symposium, catalog, etc), date, pages(s), volume-issue number(s), publisher, city and/or country where published.	T[5]
/R.P./	1	Harrison, Beverly L., Fishkin, Kenneth P., Gujar, Anuj, Mochon, Carlos and Want, Roy, Squeeze Me, Hold Me, Tilt Me! An Exploration of Manipulative User Interfaces, Proceeding of the CHI '98 Conference on Human Factors in Computing Systems, April 18-23, 1998, pages 17-24, ACM, Los Angeles, CA.	☐
/R.P./	2	Kurtenbach, Gordon P., Sellen, Abigail J. and Buxton, William A. S., An Empirical Evaluation of Some Articulatory and Cognitive Aspects of Marking Menus, Human-Computer Interaction, Volume 8, Issue 1, March 1993, pages 1-23, L. Erlbaum Associates Inc., Hillsdale, NJ.	☐
/R.P./	3	MacKenzie, I. Scott and Soukoreff, William, Text Entry for Mobile Computing: Models and Methods, Theory and Practice, Human-Computer Interaction, 2002, Volume 17, pages 147-198, L. Erlbaum Associates Inc., Hillsdale, NJ.	☐
/R.P./	4	Mynatt, Elizabeth D., Igarashi, Takeo, Edwards, W. Keith and LaMarca, Anthony, Flatland: New Dimensions in Office Whiteboards, Proceeding of the CHI '99 Conference on Human Factors in Computing Systems, May 15-20, 1999, pages 346-353, ACM, Pittsburgh, PA.	☐

INFORMATION DISCLOSURE STATEMENT BY APPLICANT (Not for submission under 37 CFR 1.99)		
	Application Number	13310755
	Filing Date	2011-12-04
	First Named Inventor	Magnus Goertz
	Art Unit	2171
	Examiner Name	Ryan F. Pitaro
	Attorney Docket Number	NEONODE.P039

/R.P./	5	Bier, Eric A., Fishkin, Ken, Pier, Ken and Stone, Maureen C., A Taxonomy Of See-Through Tools: The Video, Proceeding of the CHI '95 Mosaic of Creativity, May 7-11, 1995, pages 411-412, ACM, Denver, CO.	☐
/R.P./	6	Bier, Eric A., Stone, Maureen C., Fishkin, Ken, Buxton, William and Baudel, Thomas, A Taxonomy Of See-Through Tools, Conference on Human Factors in Computing Systems, CHI 1994, Boston, MA, April 24-28, 1994, Proceedings, pages 358-364. ACM, New York, NY.	☐
/R.P./	7	Damm, Christian Heide, Hansen, Klaus Marius and Thomsen, Michael, Tool Support for Cooperative Object-Oriented Design: Gesture Based Modeling on an Electronic Whiteboard, Proceeding of the CHI '00 Conference on Human Factors in Computing Systems, April 1-6, 2000, pages 518-525, ACM, New York, NY.	☐
/R.P./	8	Jermyn, Ian, Mayer Alain, Monrose, Fabian, Reiter, Michael K. and Rubin, Aviel D., The Design And Analysis Of Graphical Passwords, Proceedings of the 8th USENIX Security Symposium, Washington, D.C., USA, August 23–26, 1999.	☐
/R.P./	9	Kenwood KVT-911DVD Instruction Manual, 2001, Japan.	☐
/R.P./	10	Kurtenbach, Gordon and Buxton, William, The Limits Of Expert Performance Using Hierarchic Marking Menus, Proceedings from INTERCHI 93 - Conference on Human Factors in Computing Systems, Pages 482-487, ACM, New York, NY.	☐
/R.P./	11	Pirhonen, Antti, Brewster, Stephen and Holguin, Christopher, Gestural and Audio Metaphors as a Means of Control for Mobile Devices, Proceedings of the SIGCHI conference on Human factors in computing systems: Changing Our World, Changing Ourselves, Pages 291-298, ACM New York, NY.	☐

If you wish to add additional non-patent literature document citation information please click the Add button **Add**

EXAMINER SIGNATURE

Examiner Signature	/Ryan Pitaro/	Date Considered	02/25/2013

*EXAMINER: Initial if reference considered, whether or not citation is in conformance with MPEP 609. Draw line through a citation if not in conformance and not considered. Include copy of this form with next communication to applicant.

[1] See Kind Codes of USPTO Patent Documents at www.USPTO.GOV or MPEP 901.04. [2] Enter office that issued the document, by the two-letter code (WIPO Standard ST.3). [3] For Japanese patent documents, the indication of the year of the reign of the Emperor must precede the serial number of the patent document. [4] Kind of document by the appropriate symbols as indicated on the document under WIPO Standard ST.16 if possible. [5] Applicant is to place a check mark here if English language translation is attached.

INFORMATION DISCLOSURE STATEMENT BY APPLICANT (Not for submission under 37 CFR 1.99)		
	Application Number	13310755
	Filing Date	2011-12-04
	First Named Inventor	Magnus Goertz
	Art Unit	2171
	Examiner Name	Ryan F. Pitaro
	Attorney Docket Number	NEONODE.P039

CERTIFICATION STATEMENT

Please see 37 CFR 1.97 and 1.98 to make the appropriate selection(s):

☐ That each item of information contained in the information disclosure statement was first cited in any communication from a foreign patent office in a counterpart foreign application not more than three months prior to the filing of the information disclosure statement. See 37 CFR 1.97(e)(1).

OR

☐ That no item of information contained in the information disclosure statement was cited in a communication from a foreign patent office in a counterpart foreign application, and, to the knowledge of the person signing the certification after making reasonable inquiry, no item of information contained in the information disclosure statement was known to any individual designated in 37 CFR 1.56(c) more than three months prior to the filing of the information disclosure statement. See 37 CFR 1.97(e)(2).

☐ See attached certification statement.

☒ The fee set forth in 37 CFR 1.17 (p) has been submitted herewith.

☒ A certification statement is not submitted herewith.

SIGNATURE

A signature of the applicant or representative is required in accordance with CFR 1.33, 10.18. Please see CFR 1.4(d) for the form of the signature.

Signature	/Marc A. Berger/	Date (YYYY-MM-DD)	2013-01-24
Name/Print	Marc A. Berger	Registration Number	44029

This collection of information is required by 37 CFR 1.97 and 1.98. The information is required to obtain or retain a benefit by the public which is to file (and by the USPTO to process) an application. Confidentiality is governed by 35 U.S.C. 122 and 37 CFR 1.14. This collection is estimated to take 1 hour to complete, including gathering, preparing and submitting the completed application form to the USPTO. Time will vary depending upon the individual case. Any comments on the amount of time you require to complete this form and/or suggestions for reducing this burden, should be sent to the Chief Information Officer, U.S. Patent and Trademark Office, U.S. Department of Commerce, P.O. Box 1450, Alexandria, VA 22313-1450. DO NOT SEND FEES OR COMPLETED FORMS TO THIS ADDRESS. **SEND TO: Commissioner for Patents, P.O. Box 1450, Alexandria, VA 22313-1450.**

Privacy Act Statement

The Privacy Act of 1974 (P.L. 93-579) requires that you be given certain information in connection with your submission of the attached form related to a patent application or patent. Accordingly, pursuant to the requirements of the Act, please be advised that: (1) the general authority for the collection of this information is 35 U.S.C. 2(b)(2); (2) furnishing of the information solicited is voluntary; and (3) the principal purpose for which the information is used by the U.S. Patent and Trademark Office is to process and/or examine your submission related to a patent application or patent. If you do not furnish the requested information, the U.S. Patent and Trademark Office may not be able to process and/or examine your submission, which may result in termination of proceedings or abandonment of the application or expiration of the patent.

The information provided by you in this form will be subject to the following routine uses:

1. The information on this form will be treated confidentially to the extent allowed under the Freedom of Information Act (5 U.S.C. 552) and the Privacy Act (5 U.S.C. 552a). Records from this system of records may be disclosed to the Department of Justice to determine whether the Freedom of Information Act requires disclosure of these record s.

2. A record from this system of records may be disclosed, as a routine use, in the course of presenting evidence to a court, magistrate, or administrative tribunal, including disclosures to opposing counsel in the course of settlement negotiations.

3. A record in this system of records may be disclosed, as a routine use, to a Member of Congress submitting a request involving an individual, to whom the record pertains, when the individual has requested assistance from the Member with respect to the subject matter of the record.

4. A record in this system of records may be disclosed, as a routine use, to a contractor of the Agency having need for the information in order to perform a contract. Recipients of information shall be required to comply with the requirements of the Privacy Act of 1974, as amended, pursuant to 5 U.S.C. 552a(m).

5. A record related to an International Application filed under the Patent Cooperation Treaty in this system of records may be disclosed, as a routine use, to the International Bureau of the World Intellectual Property Organization, pursuant to the Patent Cooperation Treaty.

6. A record in this system of records may be disclosed, as a routine use, to another federal agency for purposes of National Security review (35 U.S.C. 181) and for review pursuant to the Atomic Energy Act (42 U.S.C. 218(c)).

7. A record from this system of records may be disclosed, as a routine use, to the Administrator, General Services, or his/her designee, during an inspection of records conducted by GSA as part of that agency's responsibility to recommend improvements in records management practices and programs, under authority of 44 U.S.C. 2904 and 2906. Such disclosure shall be made in accordance with the GSA regulations governing inspection of records for this purpose, and any other relevant (i.e., GSA or Commerce) directive. Such disclosure shall not be used to make determinations about individuals.

8. A record from this system of records may be disclosed, as a routine use, to the public after either publication of the application pursuant to 35 U.S.C. 122(b) or issuance of a patent pursuant to 35 U.S.C. 151. Further, a record may be disclosed, subject to the limitations of 37 CFR 1.14, as a routine use, to the public if the record was filed in an application which became abandoned or in which the proceedings were terminated and which application is referenced by either a published application, an application open to public inspections or an issued patent.

9. A record from this system of records may be disclosed, as a routine use, to a Federal, State, or local law enforcement agency, if the USPTO becomes aware of a violation or potential violation of law or regulation.

PTO/SB/08a (01-10)
Approved for use through 07/31/2012. OMB 0651-0031
U.S. Patent and Trademark Office; U.S. DEPARTMENT OF COMMERCE

Under the Paperwork Reduction Act of 1995, no persons are required to respond to a collection of information unless it contains a valid OMB control number.

INFORMATION DISCLOSURE STATEMENT BY APPLICANT
(Not for submission under 37 CFR 1.99)

Application Number	13310755
Filing Date	2011-12-04
First Named Inventor	Magnus Goertz
Art Unit	2171
Examiner Name	Ryan F. Pitaro
Attorney Docket Number	NEONODE.P039

U.S.PATENTS Remove

Examiner Initial*	Cite No	Patent Number	Kind Code[1]	Issue Date	Name of Patentee or Applicant of cited Document	Pages,Columns,Lines where Relevant Passages or Relevant Figures Appear
	1	5745116	A	1998-04-28	Pisutha-Arnond	
	2	5943039	A	1999-08-24	Anderson et al.	
	3	6037937	A	2000-03-14	Beaton et al.	
	4	6310610	B1	2001-10-30	Beaton et al.	
	5	6618063	B1	2003-09-09	Kurtenbach	
	6	7199786	B2	2007-04-03	Suraqui	

If you wish to add additional U.S. Patent citation information please click the Add button. Add

U.S.PATENT APPLICATION PUBLICATIONS Remove

Examiner Initial*	Cite No	Publication Number	Kind Code[1]	Publication Date	Name of Patentee or Applicant of cited Document	Pages,Columns,Lines where Relevant Passages or Relevant Figures Appear

INFORMATION DISCLOSURE STATEMENT BY APPLICANT (Not for submission under 37 CFR 1.99)		
	Application Number	13310755
	Filing Date	2011-12-04
	First Named Inventor	Magnus Goertz
	Art Unit	2171
	Examiner Name	Ryan F. Pitaro
	Attorney Docket Number	NEONODE.P039

	1	20020063696	A1	2002-05-30	Kubo et al.	
	2	20020109677	A1	2002-08-15	Taylor	

If you wish to add additional U.S. Published Application citation information please click the Add button. Add

FOREIGN PATENT DOCUMENTS Remove

Examiner Initial*	Cite No	Foreign Document Number[3]	Country Code[2] i	Kind Code[4]	Publication Date	Name of Patentee or Applicant of cited Document	Pages,Columns,Lines where Relevant Passages or Relevant Figures Appear	T[5]
	1							☐

If you wish to add additional Foreign Patent Document citation information please click the Add button Add

NON-PATENT LITERATURE DOCUMENTS Remove

Examiner Initials*	Cite No	Include name of the author (in CAPITAL LETTERS), title of the article (when appropriate), title of the item (book, magazine, journal, serial, symposium, catalog, etc), date, pages(s), volume-issue number(s), publisher, city and/or country where published.	T[5]
	1	Harrison, Beverly L., Fishkin, Kenneth P., Gujar, Anuj, Mochon, Carlos and Want, Roy, Squeeze Me, Hold Me, Tilt Me! An Exploration of Manipulative User Interfaces, Proceeding of the CHI '98 Conference on Human Factors in Computing Systems, April 18-23, 1998, pages 17-24, ACM, Los Angeles, CA.	☐
	2	Kurtenbach, Gordon P., Sellen, Abigail J. and Buxton, William A. S., An Empirical Evaluation of Some Articulatory and Cognitive Aspects of Marking Menus, Human-Computer Interaction, Volume 8, Issue 1, March 1993, pages 1-23, L. Erlbaum Associates Inc., Hillsdale, NJ.	☐
	3	MacKenzie, I. Scott and Soukoreff, William, Text Entry for Mobile Computing: Models and Methods, Theory and Practice, Human-Computer Interaction, 2002, Volume 17, pages 147-198, L. Erlbaum Associates Inc., Hillsdale, NJ.	☐
	4	Mynatt, Elizabeth D., Igarashi, Takeo, Edwards, W. Keith and LaMarca, Anthony, Flatland: New Dimensions in Office Whiteboards, Proceeding of the CHI '99 Conference on Human Factors in Computing Systems, May 15-20, 1999, pages 346-353, ACM, Pittsburgh, PA.	☐

INFORMATION DISCLOSURE STATEMENT BY APPLICANT (Not for submission under 37 CFR 1.99)		
	Application Number	13310755
	Filing Date	2011-12-04
	First Named Inventor	Magnus Goertz
	Art Unit	2171
	Examiner Name	Ryan F. Pitaro
	Attorney Docket Number	NEONODE.P039

	5	Bier, Eric A., Fishkin, Ken, Pier, Ken and Stone, Maureen C., A Taxonomy Of See-Through Tools: The Video, Proceeding of the CHI '95 Mosaic of Creativity, May 7-11, 1995, pages 411-412, ACM, Denver, CO.	☐
	6	Bier, Eric A., Stone, Maureen C., Fishkin, Ken, Buxton, William and Baudel, Thomas, A Taxonomy Of See-Through Tools, Conference on Human Factors in Computing Systems, CHI 1994, Boston, MA, April 24-28, 1994, Proceedings, pages 358-364. ACM, New York, NY.	☐
	7	Damm, Christian Heide, Hansen, Klaus Marius and Thomsen, Michael, Tool Support for Cooperative Object-Oriented Design: Gesture Based Modeling on an Electronic Whiteboard, Proceeding of the CHI '00 Conference on Human Factors in Computing Systems, April 1-6, 2000, pages 518-525, ACM, New York, NY.	☐
	8	Jermyn, Ian, Mayer Alain, Monrose, Fabian, Reiter, Michael K. and Rubin, Aviel D., The Design And Analysis Of Graphical Passwords, Proceedings of the 8th USENIX Security Symposium, Washington, D.C., USA, August 23–26, 1999.	☐
	9	Kenwood KVT-911DVD Instruction Manual, 2001, Japan.	☐
	10	Kurtenbach, Gordon and Buxton, William, The Limits Of Expert Performance Using Hierarchic Marking Menus, Proceedings from INTERCHI 93 - Conference on Human Factors in Computing Systems, Pages 482-487, ACM, New York, NY.	☐
	11	Pirhonen, Antti, Brewster, Stephen and Holguin, Christopher, Gestural and Audio Metaphors as a Means of Control for Mobile Devices, Proceedings of the SIGCHI conference on Human factors in computing systems: Changing Our World, Changing Ourselves, Pages 291-298, ACM New York, NY.	☐

If you wish to add additional non-patent literature document citation information please click the Add button Add

EXAMINER SIGNATURE

Examiner Signature		Date Considered	

*EXAMINER: Initial if reference considered, whether or not citation is in conformance with MPEP 609. Draw line through a citation if not in conformance and not considered. Include copy of this form with next communication to applicant.

[1] See Kind Codes of USPTO Patent Documents at www.USPTO.GOV or MPEP 901.04. [2] Enter office that issued the document, by the two-letter code (WIPO Standard ST.3). [3] For Japanese patent documents, the indication of the year of the reign of the Emperor must precede the serial number of the patent document. [4] Kind of document by the appropriate symbols as indicated on the document under WIPO Standard ST.16 if possible. [5] Applicant is to place a check mark here if English language translation is attached.

INFORMATION DISCLOSURE STATEMENT BY APPLICANT (Not for submission under 37 CFR 1.99)		
	Application Number	13310755
	Filing Date	2011-12-04
	First Named Inventor	Magnus Goertz
	Art Unit	2171
	Examiner Name	Ryan F. Pitaro
	Attorney Docket Number	NEONODE.P039

CERTIFICATION STATEMENT

Please see 37 CFR 1.97 and 1.98 to make the appropriate selection(s):

☐ That each item of information contained in the information disclosure statement was first cited in any communication from a foreign patent office in a counterpart foreign application not more than three months prior to the filing of the information disclosure statement. See 37 CFR 1.97(e)(1).

OR

☐ That no item of information contained in the information disclosure statement was cited in a communication from a foreign patent office in a counterpart foreign application, and, to the knowledge of the person signing the certification after making reasonable inquiry, no item of information contained in the information disclosure statement was known to any individual designated in 37 CFR 1.56(c) more than three months prior to the filing of the information disclosure statement. See 37 CFR 1.97(e)(2).

☐ See attached certification statement.

☒ The fee set forth in 37 CFR 1.17 (p) has been submitted herewith.

☒ A certification statement is not submitted herewith.

SIGNATURE

A signature of the applicant or representative is required in accordance with CFR 1.33, 10.18. Please see CFR 1.4(d) for the form of the signature.

Signature	/Marc A. Berger/	Date (YYYY-MM-DD)	2013-01-24
Name/Print	Marc A. Berger	Registration Number	44029

This collection of information is required by 37 CFR 1.97 and 1.98. The information is required to obtain or retain a benefit by the public which is to file (and by the USPTO to process) an application. Confidentiality is governed by 35 U.S.C. 122 and 37 CFR 1.14. This collection is estimated to take 1 hour to complete, including gathering, preparing and submitting the completed application form to the USPTO. Time will vary depending upon the individual case. Any comments on the amount of time you require to complete this form and/or suggestions for reducing this burden, should be sent to the Chief Information Officer, U.S. Patent and Trademark Office, U.S. Department of Commerce, P.O. Box 1450, Alexandria, VA 22313-1450. DO NOT SEND FEES OR COMPLETED FORMS TO THIS ADDRESS. **SEND TO: Commissioner for Patents, P.O. Box 1450, Alexandria, VA 22313-1450.**

Privacy Act Statement

The Privacy Act of 1974 (P.L. 93-579) requires that you be given certain information in connection with your submission of the attached form related to a patent application or patent. Accordingly, pursuant to the requirements of the Act, please be advised that: (1) the general authority for the collection of this information is 35 U.S.C. 2(b)(2); (2) furnishing of the information solicited is voluntary; and (3) the principal purpose for which the information is used by the U.S. Patent and Trademark Office is to process and/or examine your submission related to a patent application or patent. If you do not furnish the requested information, the U.S. Patent and Trademark Office may not be able to process and/or examine your submission, which may result in termination of proceedings or abandonment of the application or expiration of the patent.

The information provided by you in this form will be subject to the following routine uses:

1. The information on this form will be treated confidentially to the extent allowed under the Freedom of Information Act (5 U.S.C. 552) and the Privacy Act (5 U.S.C. 552a). Records from this system of records may be disclosed to the Department of Justice to determine whether the Freedom of Information Act requires disclosure of these record s.

2. A record from this system of records may be disclosed, as a routine use, in the course of presenting evidence to a court, magistrate, or administrative tribunal, including disclosures to opposing counsel in the course of settlement negotiations.

3. A record in this system of records may be disclosed, as a routine use, to a Member of Congress submitting a request involving an individual, to whom the record pertains, when the individual has requested assistance from the Member with respect to the subject matter of the record.

4. A record in this system of records may be disclosed, as a routine use, to a contractor of the Agency having need for the information in order to perform a contract. Recipients of information shall be required to comply with the requirements of the Privacy Act of 1974, as amended, pursuant to 5 U.S.C. 552a(m).

5. A record related to an International Application filed under the Patent Cooperation Treaty in this system of records may be disclosed, as a routine use, to the International Bureau of the World Intellectual Property Organization, pursuant to the Patent Cooperation Treaty.

6. A record in this system of records may be disclosed, as a routine use, to another federal agency for purposes of National Security review (35 U.S.C. 181) and for review pursuant to the Atomic Energy Act (42 U.S.C. 218(c)).

7. A record from this system of records may be disclosed, as a routine use, to the Administrator, General Services, or his/her designee, during an inspection of records conducted by GSA as part of that agency's responsibility to recommend improvements in records management practices and programs, under authority of 44 U.S.C. 2904 and 2906. Such disclosure shall be made in accordance with the GSA regulations governing inspection of records for this purpose, and any other relevant (i.e., GSA or Commerce) directive. Such disclosure shall not be used to make determinations about individuals.

8. A record from this system of records may be disclosed, as a routine use, to the public after either publication of the application pursuant to 35 U.S.C. 122(b) or issuance of a patent pursuant to 35 U.S.C. 151. Further, a record may be disclosed, subject to the limitations of 37 CFR 1.14, as a routine use, to the public if the record was filed in an application which became abandoned or in which the proceedings were terminated and which application is referenced by either a published application, an application open to public inspections or an issued patent.

9. A record from this system of records may be disclosed, as a routine use, to a Federal, State, or local law enforcement agency, if the USPTO becomes aware of a violation or potential violation of law or regulation.

Electronic Patent Application Fee Transmittal	
Application Number:	13310755
Filing Date:	04-Dec-2011
Title of Invention:	USER INTERFACE
First Named Inventor/Applicant Name:	Magnus Goertz
Filer:	Marc Aron Berger
Attorney Docket Number:	NEONODE.P039
Filed as Large Entity	

Utility under 35 USC 111(a) Filing Fees

Description	Fee Code	Quantity	Amount	Sub-Total in USD($)
Basic Filing:				
Pages:				
Claims:				
Miscellaneous-Filing:				
Petition:				
Patent-Appeals-and-Interference:				
Post-Allowance-and-Post-Issuance:				
Extension-of-Time:				

Description	Fee Code	Quantity	Amount	Sub-Total in USD($)
Miscellaneous:				
Submission- Information Disclosure Stmt	1806	1	180	180
		Total in USD ($)		**180**

Electronic Acknowledgement Receipt

EFS ID:	14778238
Application Number:	13310755
International Application Number:	
Confirmation Number:	1066
Title of Invention:	USER INTERFACE
First Named Inventor/Applicant Name:	Magnus Goertz
Customer Number:	75660
Filer:	Marc Aron Berger
Filer Authorized By:	
Attorney Docket Number:	NEONODE.P039
Receipt Date:	24-JAN-2013
Filing Date:	04-DEC-2011
Time Stamp:	11:32:13
Application Type:	Utility under 35 USC 111(a)

Payment information:

Submitted with Payment	yes
Payment Type	Credit Card
Payment was successfully received in RAM	$180
RAM confirmation Number	12320
Deposit Account	
Authorized User	

File Listing:

Document Number	Document Description	File Name	File Size(Bytes)/ Message Digest	Multi Part /.zip	Pages (if appl.)

1	Information Disclosure Statement (IDS) Form (SB08)	NEONODE-P039_InformationDisclosureStatement_01-24-2013.pdf	614072 f35cc440dfe16ee8f931a0ac75bfbb34eb162533	no	5
Warnings:					
Information:					
2	Non Patent Literature	HARRISON.pdf	1764540 10e2aa55b1536a83322152d8275540c46d0eaed3	no	8
Warnings:					
Information:					
3	Non Patent Literature	KURTENBACH-1.pdf	16689317 ca6cdfd7036c25c71d169d96d14ca7ac0ce2c7c1	no	24
Warnings:					
Information:					
4	Non Patent Literature	MACKENZIE.pdf	416241 47baba84a933d756c39e286e1734ec254bafd75f	no	53
Warnings:					
Information:					
5	Non Patent Literature	MYNATT.pdf	1771964 f58ca3e2c859bf261903d496fb5edf5b5f615c11	no	8
Warnings:					
Information:					
6	Non Patent Literature	BIER-1.pdf	4204350 d287781c0413c529e60e8a2f77c91765a5713495	no	2
Warnings:					
Information:					
7	Non Patent Literature	BIER-2.pdf	14908143 8a434875d8bccb83d23e282616579d04c46d4060	no	7
Warnings:					
Information:					
8	Non Patent Literature	DAMM.pdf	15932109 ef9161847a562de1cda9096646540e8a8bc46d51	no	8
Warnings:					
Information:					
9	Non Patent Literature	JERMYN.pdf	13049228 90b6af82786cf0ac67f1f07546afc98c90eb803d	no	15
Warnings:					
Information:					

10	Non Patent Literature	KENWOOD-1.pdf	6725991 55829e4c4868879064b979848f9f5764de3e6fb7	no	68
Warnings:					
Information:					
11	Non Patent Literature	KURTENBACH-2.pdf	10929364 bb486dc9f3ff2d921eea3ad9eef3cb49226ef87a	no	6
Warnings:					
Information:					
12	Non Patent Literature	PIRHONEN.pdf	182365 30bc65f86c770f06f3ad5da168c27ac80d077ac9	no	8
Warnings:					
Information:					
13	Fee Worksheet (SB06)	fee-info.pdf	30276 a11dd0520ac9ea3a6dd6f72604795681113 89efd	no	2
Warnings:					
Information:					
			Total Files Size (in bytes):	87217960	

This Acknowledgement Receipt evidences receipt on the noted date by the USPTO of the indicated documents, characterized by the applicant, and including page counts, where applicable. It serves as evidence of receipt similar to a Post Card, as described in MPEP 503.

New Applications Under 35 U.S.C. 111
If a new application is being filed and the application includes the necessary components for a filing date (see 37 CFR 1.53(b)-(d) and MPEP 506), a Filing Receipt (37 CFR 1.54) will be issued in due course and the date shown on this Acknowledgement Receipt will establish the filing date of the application.

National Stage of an International Application under 35 U.S.C. 371
If a timely submission to enter the national stage of an international application is compliant with the conditions of 35 U.S.C. 371 and other applicable requirements a Form PCT/DO/EO/903 indicating acceptance of the application as a national stage submission under 35 U.S.C. 371 will be issued in addition to the Filing Receipt, in due course.

New International Application Filed with the USPTO as a Receiving Office
If a new international application is being filed and the international application includes the necessary components for an international filing date (see PCT Article 11 and MPEP 1810), a Notification of the International Application Number and of the International Filing Date (Form PCT/RO/105) will be issued in due course, subject to prescriptions concerning national security, and the date shown on this Acknowledgement Receipt will establish the international filing date of the application.

PTO/SB/06 (07-06)
Approved for use through 1/31/2007. OMB 0651-0032
U.S. Patent and Trademark Office; U.S. DEPARTMENT OF COMMERCE
Under the Paperwork Reduction Act of 1995, no persons are required to respond to a collection of information unless it displays a valid OMB control number.

PATENT APPLICATION FEE DETERMINATION RECORD

Substitute for Form PTO-875

Application or Docket Number	Filing Date	☐ To be Mailed
13/310,755	12/04/2011	

APPLICATION AS FILED – PART I

	(Column 1)	(Column 2)	SMALL ENTITY ☐		OR	OTHER THAN SMALL ENTITY	
FOR	NUMBER FILED	NUMBER EXTRA	RATE ($)	FEE ($)		RATE ($)	FEE ($)
☐ BASIC FEE (37 CFR 1.16(a), (b), or (c))	N/A	N/A	N/A			N/A	
☐ SEARCH FEE (37 CFR 1.16(k), (i), or (m))	N/A	N/A	N/A			N/A	
☐ EXAMINATION FEE (37 CFR 1.16(o), (p), or (q))	N/A	N/A	N/A			N/A	
TOTAL CLAIMS (37 CFR 1.16(i))	minus 20 =	*	X $ =		OR	X $ =	
INDEPENDENT CLAIMS (37 CFR 1.16(h))	minus 3 =	*	X $ =			X $ =	
☐ APPLICATION SIZE FEE (37 CFR 1.16(s))	If the specification and drawings exceed 100 sheets of paper, the application size fee due is $250 ($125 for small entity) for each additional 50 sheets or fraction thereof. See 35 U.S.C. 41(a)(1)(G) and 37 CFR 1.16(s).						
☐ MULTIPLE DEPENDENT CLAIM PRESENT (37 CFR 1.16(j))							
* If the difference in column 1 is less than zero, enter "0" in column 2.			TOTAL			TOTAL	

APPLICATION AS AMENDED – PART II

AMENDMENT	01/24/2013	(Column 1) CLAIMS REMAINING AFTER AMENDMENT		(Column 2) HIGHEST NUMBER PREVIOUSLY PAID FOR	(Column 3) PRESENT EXTRA	SMALL ENTITY RATE ($)	ADDITIONAL FEE ($)	OR	OTHER THAN SMALL ENTITY RATE ($)	ADDITIONAL FEE ($)
	Total (37 CFR 1.16(i))	* 17	Minus	** 20	= 0	X $ =		OR	X $62=	0
	Independent (37 CFR 1.16(h))	* 4	Minus	***4	= 0	X $ =		OR	X $250=	0
	☐ Application Size Fee (37 CFR 1.16(s))									
	☐ FIRST PRESENTATION OF MULTIPLE DEPENDENT CLAIM (37 CFR 1.16(j))							OR		
						TOTAL ADD'L FEE		OR	TOTAL ADD'L FEE	0

AMENDMENT		(Column 1) CLAIMS REMAINING AFTER AMENDMENT		(Column 2) HIGHEST NUMBER PREVIOUSLY PAID FOR	(Column 3) PRESENT EXTRA	RATE ($)	ADDITIONAL FEE ($)	OR	RATE ($)	ADDITIONAL FEE ($)
	Total (37 CFR 1.16(i))	*	Minus	**	=	X $ =		OR	X $ =	
	Independent (37 CFR 1.16(h))	*	Minus	***	=	X $ =		OR	X $ =	
	☐ Application Size Fee (37 CFR 1.16(s))									
	☐ FIRST PRESENTATION OF MULTIPLE DEPENDENT CLAIM (37 CFR 1.16(j))							OR		
						TOTAL ADD'L FEE		OR	TOTAL ADD'L FEE	

* If the entry in column 1 is less than the entry in column 2, write "0" in column 3.

** If the "Highest Number Previously Paid For" IN THIS SPACE is less than 20, enter "20".

*** If the "Highest Number Previously Paid For" IN THIS SPACE is less than 3, enter "3".

The "Highest Number Previously Paid For" (Total or Independent) is the highest number found in the appropriate box in column 1.

Legal Instrument Examiner:
/FREDERICK BRISCOE/

This collection of information is required by 37 CFR 1.16. The information is required to obtain or retain a benefit by the public which is to file (and by the USPTO to process) an application. Confidentiality is governed by 35 U.S.C. 122 and 37 CFR 1.14. This collection is estimated to take 12 minutes to complete, including gathering, preparing, and submitting the completed application form to the USPTO. Time will vary depending upon the individual case. Any comments on the amount of time you require to complete this form and/or suggestions for reducing this burden, should be sent to the Chief Information Officer, U.S. Patent and Trademark Office, U.S. Department of Commerce, P.O. Box 1450, Alexandria, VA 22313-1450. DO NOT SEND FEES OR COMPLETED FORMS TO THIS ADDRESS. **SEND TO: Commissioner for Patents, P.O. Box 1450, Alexandria, VA 22313-1450.**

If you need assistance in completing the form, call 1-800-PTO-9199 and select option 2.

UNITED STATES PATENT AND TRADEMARK OFFICE

Commissioner for Patents
United States Patent and Trademark Office
P.O. Box 1450
Alexandria, VA 22313-1450
www.uspto.gov

Soquel Group, LLC
P.O. Box 691
Soquel CA 95073

MAILED
JAN 22 2013
OFFICE OF PETITIONS

Doc Code: TRACK1.GRANT

Decision Granting Request for Prioritized Examination (Track I or After RCE)	Application No.: 13/310,755

1. THE REQUEST FILED December 20, 2012 IS **GRANTED.**

The above-identified application has met the requirements for prioritized examination

A. ☐ for an original nonprovisional application (Track I).
B. ☒ for an application undergoing continued examination (RCE).

2. **The above-identified application will undergo prioritized examination.** The application will be accorded special status throughout its entire course of prosecution until one of the following occurs:

A. filing a **petition for extension of time** to extend the time period for filing a reply;
B. filing an **amendment to amend the application to contain more than four independent claims, more than thirty total claims**, or a multiple dependent claim;
C. filing a **request for continued examination**;
D. filing a notice of appeal;
E. filing a request for suspension of action;
F. mailing of a notice of allowance;
G. mailing of a final Office action;
H. completion of examination as defined in 37 CFR 41.102; or
I. abandonment of the application.

Telephone inquiries with regard to this decision should be directed to JoAnne Burke at 571-272-4584. In his/her absence, calls may be directed to Brian Brown, 571-272-5338.

/JoAnne Burke/
[*Signature*]

Petitions Examiner
(Title)

U.S. Patent and Trademark Office
PTO-2298 (Rev. 02-2012)

PTO/SB/30EFS (07-09)
Approved for use through 07/31/2012. OMB 0651-0031
U.S. Patent and Trademark Office; U.S. DEPARTMENT OF COMMERCE
Under the Paperwork Reduction Act of 1995, no persons are required to respond to a collection of information unless it contains a valid OMB control number.

REQUEST FOR CONTINUED EXAMINATION(RCE)TRANSMITTAL
(Submitted Only via EFS-Web)

Application Number	13/310,755	Filing Date	2011-12-04	Docket Number (if applicable)	NEONODE.P039	Art Unit	2171
First Named Inventor	Magnus Goertz			Examiner Name	Ryan F. Pitaro		

This is a Request for Continued Examination (RCE) under 37 CFR 1.114 of the above-identified application.
Request for Continued Examination (RCE) practice under 37 CFR 1.114 does not apply to any utility or plant application filed prior to June 8, 1995, or to any design application. The Instruction Sheet for this form is located at WWW.USPTO.GOV

SUBMISSION REQUIRED UNDER 37 CFR 1.114

Note: If the RCE is proper, any previously filed unentered amendments and amendments enclosed with the RCE will be entered in the order in which they were filed unless applicant instructs otherwise. If applicant does not wish to have any previously filed unentered amendment(s) entered, applicant must request non-entry of such amendment(s).

☐ Previously submitted. If a final Office action is outstanding, any amendments filed after the final Office action may be considered as a submission even if this box is not checked.

- ☐ Consider the arguments in the Appeal Brief or Reply Brief previously filed on _____
- ☐ Other _____

☒ Enclosed

- ☒ Amendment/Reply
- ☐ Information Disclosure Statement (IDS)
- ☐ Affidavit(s)/ Declaration(s)
- ☐ Other _____

MISCELLANEOUS

☐ Suspension of action on the above-identified application is requested under 37 CFR 1.103(c) for a period of months _____ (Period of suspension shall not exceed 3 months; Fee under 37 CFR 1.17(i) required)

☐ Other _____

FEES

☐ **The RCE fee under 37 CFR 1.17(e) is required by 37 CFR 1.114 when the RCE is filed.**
The Director is hereby authorized to charge any underpayment of fees, or credit any overpayments, to Deposit Account No _____

SIGNATURE OF APPLICANT, ATTORNEY, OR AGENT REQUIRED

☒ Patent Practitioner Signature

☐ Applicant Signature

PTO/SB/30EFS (07-09)
Approved for use through 07/31/2012. OMB 0651-0031
U.S. Patent and Trademark Office; U.S. DEPARTMENT OF COMMERCE
Under the Paperwork Reduction Act of 1995, no persons are required to respond to a collection of information unless it contains a valid OMB control number.

Signature of Registered U.S. Patent Practitioner			
Signature	/Marc A. Berger/	Date (YYYY-MM-DD)	2012-12-20
Name	Marc A. Berger	Registration Number	44029

This collection of information is required by 37 CFR 1.114. The information is required to obtain or retain a benefit by the public which is to file (and by the USPTO to process) an application. Confidentiality is governed by 35 U.S.C. 122 and 37 CFR 1.11 and 1.14. This collection is estimated to take 12 minutes to complete, including gathering, preparing, and submitting the completed application form to the USPTO. Time will vary depending upon the individual case. Any comments on the amount of time you require to complete this form and/or suggestions for reducing this burden, should be sent to the Chief Information Officer, U.S. Patent and Trademark Office, U.S. Department of Commerce, P.O. Box 1450, Alexandria, VA 22313-1450.

If you need assistance in completing the form, call 1-800-PTO-9199 and select option 2.

Privacy Act Statement

The Privacy Act of 1974 (P.L. 93-579) requires that you be given certain information in connection with your submission of the attached form related to a patent application or patent. Accordingly, pursuant to the requirements of the Act, please be advised that: (1) the general authority for the collection of this information is 35 U.S.C. 2(b)(2); (2) furnishing of the information solicited is voluntary; and (3) the principal purpose for which the information is used by the U.S. Patent and Trademark Office is to process and/or examine your submission related to a patent application or patent. If you do not furnish the requested information, the U.S. Patent and Trademark Office may not be able to process and/or examine your submission, which may result in termination of proceedings or abandonment of the application or expiration of the patent.

The information provided by you in this form will be subject to the following routine uses:

1. The information on this form will be treated confidentially to the extent allowed under the Freedom of Information Act (5 U.S.C. 552) and the Privacy Act (5 U.S.C. 552a). Records from this system of records may be disclosed to the Department of Justice to determine whether the Freedom of Information Act requires disclosure of these records.

2. A record from this system of records may be disclosed, as a routine use, in the course of presenting evidence to a court, magistrate, or administrative tribunal, including disclosures to opposing counsel in the course of settlement negotiations.

3. A record in this system of records may be disclosed, as a routine use, to a Member of Congress submitting a request involving an individual, to whom the record pertains, when the individual has requested assistance from the Member with respect to the subject matter of the record.

4. A record in this system of records may be disclosed, as a routine use, to a contractor of the Agency having need for the information in order to perform a contract. Recipients of information shall be required to comply with the requirements of the Privacy Act of 1974, as amended, pursuant to 5 U.S.C. 552a(m).

5. A record related to an International Application filed under the Patent Cooperation Treaty in this system of records may be disclosed, as a routine use, to the International Bureau of the World Intellectual Property Organization, pursuant to the Patent Cooperation Treaty.

6. A record in this system of records may be disclosed, as a routine use, to another federal agency for purposes of National Security review (35 U.S.C. 181) and for review pursuant to the Atomic Energy Act (42 U.S.C. 218(c)).

7. A record from this system of records may be disclosed, as a routine use, to the Administrator, General Services, or his/her designee, during an inspection of records conducted by GSA as part of that agency's responsibility to recommend improvements in records management practices and programs, under authority of 44 U.S.C. 2904 and 2906. Such disclosure shall be made in accordance with the GSA regulations governing inspection of records for this purpose, and any other relevant (i.e., GSA or Commerce) directive. Such disclosure shall not be used to make determinations about individuals.

8. A record from this system of records may be disclosed, as a routine use, to the public after either publication of the application pursuant to 35 U.S.C. 122(b) or issuance of a patent pursuant to 35 U.S.C. 151. Further, a record may be disclosed, subject to the limitations of 37 CFR 1.14, as a routine use, to the public if the record was filed in an application which became abandoned or in which the proceedings were terminated and which application is referenced by either a published application, an application open to public inspections or an issued patent.

9. A record from this system of records may be disclosed, as a routine use, to a Federal, State, or local law enforcement agency, if the USPTO becomes aware of a violation or potential violation of law or regulation.

Doc Code: TRACK1.REQ
Document Description: TrackOne Request

PTO/SB/424 (12-11)

CERTIFICATION AND REQUEST FOR PRIORITIZED EXAMINATION UNDER 37 CFR 1.102(e) (Page 1 of 1)

First Named Inventor:	Magnus Goertz	Nonprovisional Application Number (if known):	13/310,755
Title of Invention:	USER INTERFACE		

APPLICANT HEREBY CERTIFIES THE FOLLOWING AND REQUESTS PRIORITIZED EXAMINATION FOR THE ABOVE-IDENTIFIED APPLICATION.

1. The processing fee set forth in 37 CFR 1.17(i), the prioritized examination fee set forth in 37 CFR 1.17(c), and if not already paid, the publication fee set forth in 37 CFR 1.18(d) have been filed with the request. The basic filing fee, search fee, examination fee, and any required excess claims and application size fees are filed with the request or have been already been paid.

2. The application contains or is amended to contain no more than four independent claims and no more than thirty total claims, and no multiple dependent claims.

3. The applicable box is checked below:

I. ☐ Original Application (Track One) - Prioritized Examination under § 1.102(e)(1)

i. (a) The application is an original nonprovisional utility application filed under 35 U.S.C. 111(a). This certification and request is being filed with the utility application via EFS-Web.

---OR---

(b) The application is an original nonprovisional plant application filed under 35 U.S.C. 111(a). This certification and request is being filed with the plant application in paper.

ii. An executed oath or declaration under 37 CFR 1.63 is filed with the application.

II. ☑ Request for Continued Examination - Prioritized Examination under § 1.102(e)(2)

i. A request for continued examination has been filed with, or prior to, this form.
ii. If the application is a utility application, this certification and request is being filed via EFS-Web.
iii. The application is an original nonprovisional utility application filed under 35 U.S.C. 111(a), or is a national stage entry under 35 U.S.C. 371.
iv. This certification and request is being filed prior to the mailing of a first Office action responsive to the request for continued examination.
v. No prior request for continued examination has been granted prioritized examination status under 37 CFR 1.102(e)(2).

Signature	/Marc A. Berger/	Date	December 20, 2012
Name (Print/Typed)	Marc A. Berger	Practitioner Registration Number	44029

***Note**: Signatures of all the inventors or assignees of record of the entire interest or their representative(s) are required in accordance with 37 CFR 1.33 and 11.18. Please see 37 CFR 1.4(d) for the form of the signature. If necessary, submit multiple forms for more than one signature, see below*.*

☐ *Total of _____ forms are submitted.

Privacy Act Statement

The **Privacy Act of 1974** (**P.L. 93-579)** requires that you be given certain information in connection with your submission of the attached form related to a patent application or patent. Accordingly, pursuant to the requirements of the Act, please be advised that: (1) the general authority for the collection of this information is 35 U.S.C. 2(b)(2); (2) furnishing of the information solicited is voluntary; and (3) the principal purpose for which the information is used by the U.S. Patent and Trademark Office is to process and/or examine your submission related to a patent application or patent. If you do not furnish the requested information, the U.S. Patent and Trademark Office may not be able to process and/or examine your submission, which may result in termination of proceedings or abandonment of the application or expiration of the patent.

The information provided by you in this form will be subject to the following routine uses:

1. The information on this form will be treated confidentially to the extent allowed under the Freedom of Information Act (5 U.S.C. 552) and the Privacy Act (5 U.S.C 552a). Records from this system of records may be disclosed to the Department of Justice to determine whether disclosure of these records is required by the Freedom of Information Act.
2. A record from this system of records may be disclosed, as a routine use, in the course of presenting evidence to a court, magistrate, or administrative tribunal, including disclosures to opposing counsel in the course of settlement negotiations.
3. A record in this system of records may be disclosed, as a routine use, to a Member of Congress submitting a request involving an individual, to whom the record pertains, when the individual has requested assistance from the Member with respect to the subject matter of the record.
4. A record in this system of records may be disclosed, as a routine use, to a contractor of the Agency having need for the information in order to perform a contract. Recipients of information shall be required to comply with the requirements of the Privacy Act of 1974, as amended, pursuant to 5 U.S.C. 552a(m).
5. A record related to an International Application filed under the Patent Cooperation Treaty in this system of records may be disclosed, as a routine use, to the International Bureau of the World Intellectual Property Organization, pursuant to the Patent Cooperation Treaty.
6. A record in this system of records may be disclosed, as a routine use, to another federal agency for purposes of National Security review (35 U.S.C. 181) and for review pursuant to the Atomic Energy Act (42 U.S.C. 218(c)).
7. A record from this system of records may be disclosed, as a routine use, to the Administrator, General Services, or his/her designee, during an inspection of records conducted by GSA as part of that agency's responsibility to recommend improvements in records management practices and programs, under authority of 44 U.S.C. 2904 and 2906. Such disclosure shall be made in accordance with the GSA regulations governing inspection of records for this purpose, and any other relevant (*i.e.*, GSA or Commerce) directive. Such disclosure shall not be used to make determinations about individuals.
8. A record from this system of records may be disclosed, as a routine use, to the public after either publication of the application pursuant to 35 U.S.C. 122(b) or issuance of a patent pursuant to 35 U.S.C. 151. Further, a record may be disclosed, subject to the limitations of 37 CFR 1.14, as a routine use, to the public if the record was filed in an application which became abandoned or in which the proceedings were terminated and which application is referenced by either a published application, an application open to public inspection or an issued patent.
9. A record from this system of records may be disclosed, as a routine use, to a Federal, State, or local law enforcement agency, if the USPTO becomes aware of a violation or potential violation of law or regulation.

Attorney's Docket No.: NEONODE.P039 *PATENT*

IN THE UNITED STATES PATENT AND TRADEMARK OFFICE

In Re Patent Application of:	)	
	)	Examiner: Ryan F. Pitaro
Magnus Goertz	)	
	)	Art Unit: 2171
Application No: 13/310,755	)	
	)	
Filed: December 4, 2011	)	
	)	
For: USER INTERFACE	)	
_____	)	

Mail Stop AMENDMENT
Commissioner for Patents
P. O. Box 1450
Alexandria, VA 22313-1450

AMENDMENT AND RESPONSE TO OFFICE ACTION

UNDER 37 C.F.R. §1.114

In response to the final office action dated September 27, 2012 (the "Office Action") and pursuant to 37 C.F.R. §1.114, applicant respectfully requests that the above-identified application be amended as follows. A Request for Continued Examination is being filed herewith, and the requisite fee is being paid herewith.

IN THE CLAIMS:

Please cancel claim **38** without prejudice.

Please substitute the following claims for the claims with the same number.

1. – **18.** (canceled)

19. (withdrawn) A non-transitory computer readable medium storing computer program code which, when executed by a mobile handheld device that has a touch sensitive display, instructs the device (i) to display a notification of an incoming phone call, and (ii) to accept the call in response to a multi-step operation comprising an object touching the touch sensitive display, and the object gliding along the touch sensitive display in a specific direction.

20. (withdrawn) The computer readable medium of claim **19**, wherein the program code instructs the device (iii) to disconnect the call in response to a multi-step operation comprising an object touching the touch sensitive area, and the object gliding the object along the touch sensitive display in a direction opposite to the specific direction.

21. (currently amended) A non-transitory computer readable medium storing instructions, which, when executed by a processor of an electronic device, cause the processor to enable a user interface of the device, the user interface comprising at least two states, namely, (a) a home state ~~that presents controls~~ comprising a plurality of tap-activatable icons for a respective plurality of pre-designated system functions, [[and]] each system function being activated in response to a tap on its

respective icon, and (b) a tap-disabled state, wherein tap-activatable icons are absent, comprising a touch sensitive area in which is provided a graphic ~~associated with the home state is provided, wherein~~ for transitioning the user interface ~~transitions~~ from the tap-disabled state to the home state in response to a multi-step user gesture comprising (i) an object touching the touch sensitive area at a location where the graphic is provided, and (ii) the object gliding along the touch sensitive ~~display~~ area away from the touched location[[,]].

22. – **27.** (canceled)

28. (withdrawn) A computer readable medium storing computer program code, which, when executed by a mobile handheld device having a touch sensitive display, instructs the device (i) to display a list of files of a first type, and (ii) to change the list to display files of a second type in response to a tap on the display.

29. (withdrawn) The computer readable medium of claim **28**, wherein the computer program code instructs the device to (iii) display a representation of a file type, and wherein the device changes the list in response to a tap on the representation of the file type.

30. (withdrawn) The computer readable medium of claim **28**, wherein the files of the first type are data files, and the files of the second type are application files.

31. (withdrawn) A computer readable medium storing computer program code, which, when executed by a mobile handheld device that has a touch sensitive display, instructs the device to (i) to display a data input keypad

for a user to enter data, and to display a text field for entered data, (ii) to display representations of a plurality of applications, and (iii) to activate one of the applications and to have the application use the entered data, in response to a tap on its representation.

32. (withdrawn) The computer readable medium of claim **31**, wherein the plurality of applications includes a telephone application that uses the entered data as a telephone number.

33. (withdrawn) The computer readable medium of claim **31**, wherein the plurality of applications includes a text messaging application that uses the entered data as a text message.

34. (withdrawn) The computer readable medium of claim **33**, wherein the text messaging application is a short messaging service (SMS) application.

35. (withdrawn) The computer readable medium of claim **33**, wherein the text messaging application is an e-mail application.

36. (withdrawn) The computer readable medium of claim **31**, wherein the plurality of applications includes a contact list application that stores the entered data as retrievable contact information.

37. (previously presented) The computer readable medium of claim **21**, wherein any state transition elicited by a user gesture that begins at a location at which the graphic is provided, transitions to the home state.

38. (canceled)

39. (currently amended) The computer readable medium of claim **21**, wherein the home state does not ~~present controls~~ display the tap-activatable icons within a window frame.

40. (previously presented) The computer readable medium of claim **21**, wherein the plurality of pre-designated system functions comprises a help function.

41. (previously presented) The computer readable medium of claim **21**, wherein the plurality of pre-designated system functions comprises a clock function.

42. (previously presented) The computer readable medium of claim **21**, wherein the plurality of pre-designated system functions comprises an alarm function.

REMARKS

Applicants express appreciation to the Examiner for the courtesy of an interview granted to applicant's representative Marc A. Berger (Reg. No. 44,029) and assignee's representative Joseph Shain. The interview was held by telephone on Thursday, November 1, 2012. The substance of the interview focused on the references of Pogue, Palm Pilot: The Ultimate Guide, 2nd Edition ("Pogue"), and swipe_readme.txt ("Swipe").

Applicant's representative has carefully studied the outstanding Office Action. The present amendment is intended to place the application in condition for allowance and is believed to overcome all of the rejections made by the Office Action. Favorable reconsideration and allowance of the application are respectfully requested.

Applicant has canceled claim **38** without disclaimer of the ability to pursue the subject matter of this claim in a continuation, divisional or other application. Applicant has amended claims **21** and **39** without disclaiming the right to pursue the subject matter of these claims prior to amendment. No new matter has been introduced, and support for the claim amendments is provided below. Claims **21**, **37** and **39** – **42** are presented for examination.

Claim Rejections – 35 U.S.C. §103

On pages 2 – 4, the Office Action has rejected claims **21**, **40** and **41** under 35 U.S.C. §103(a) as being unpatentable over Pogue, in view of Swipe.

On page 4 and 5, the Office Action has rejected claims **39** and **42** under 35 U.S.C. §103(a) as being unpatentable over Pogue in

view of Swipe, and in view of Carlson, Palm Organizers: Visual Quickstart Guide Palm Organizers ("Carlson").

On page 5, the Office Action has rejected claim **37** under 35 U.S.C. §103(a) as being unpatentable over Pogue in view of Swipe, and in view of Gough et al., US Patent No. 5,603,053 ("Gough").

On page 6, the Office Action has rejected claim **38** under 35 U.S.C. §103(a) as being unpatentable over Pogue in view of Swipe, and in view of Irvine, US Patent No. 7,818,691 ("Irvine"). Applicant has canceled claim **38** without acquiescence to the Office Action's reasons for rejection, and submits that rejection of this claim is thus rendered moot.

Brief Discussion of Applied References

The references of **Carlson** and **Gough** were discussed in applicant's response filed on July 3, 2012.

Pogue is a user guide for the PALM PILOT®, which is a personal digital assistant (PDA) with a touch sensitive display (Pogue/ Section 1.1). The display is divided into an upper display area and a lower silkscreen and graffiti area. The silkscreen and graffiti area includes a central rectangular graffiti area for writing characters with a stylus (Pogue/ Section 2.1.7), and the central area is bordered on the left and right side by buttons, responsive to tap input, which are silkscreened on the display glass (Pogue/ Section 1.1.1.2 and FIG. 1.1, reproduced below). In FIGS. 2.5 and 3.2, Pogue depicts a one-stroke pen drag, or "Ronomatic stroke". The Ronomatic stroke begins in the central graffiti area and extends upward into the main screen area (Pogue/ Section 2.1.7 and Chapter 3 – "How to Learn Graffiti").

The PALM PILOT® provides four silkscreened touch screen buttons, one of which (the Applications button) is used for

launching an applications screen. The Ronomatic stroke is not associated with a representative graphic, and is used for launching one of the following secondary functions:

(i) turning a backlight on and off;

(ii) opening a keyboard;

(iii) opening a graffiti help;

(iv) locking the Palm; and

(v) sending a currently selected memo, to-do-item, calendar appointment or address book entry to a nearby Palm device within infrared range.

Figure 1.1. The fundamental components of the PalmPilot.

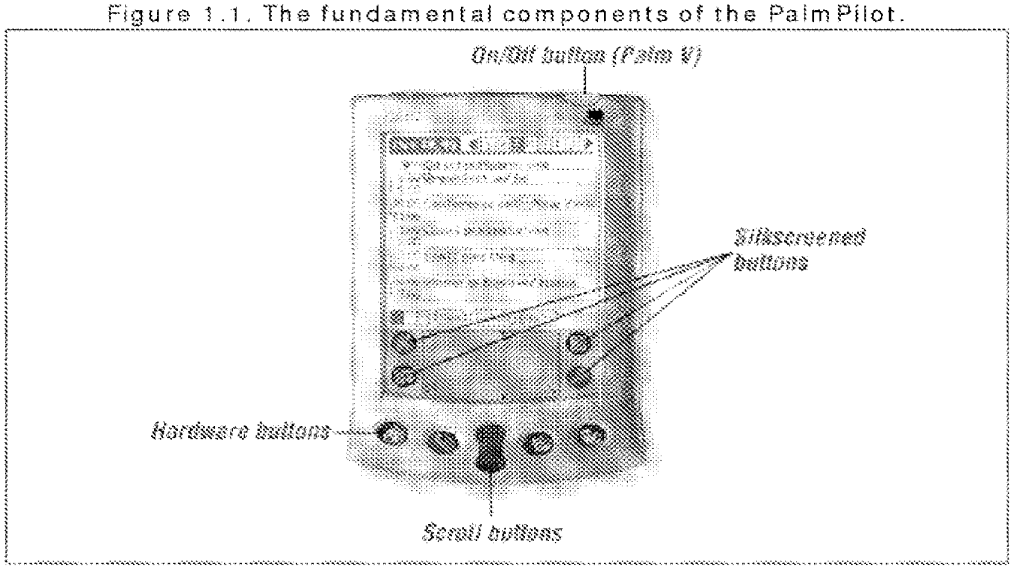

FIG. 1.1 from Pogue showing the Palm display with an upper main area and a lower graffiti and silkscreen area in which silkscreened buttons flank a rectangular graffiti area.

Swipe is an add-on program for the PALM PILOT® that enables activating functions in response to six stroke gestures across the Palm Pilot screen (Swipe/ page 1, first full paragraph). Three of the Swipe stroke gestures are from the lower left corner of the screen to one

of the other three corners; the other three Swipe stroke gestures are similar, except that they begin at the lower right corner of the screen (Swipe/ page 1, second full paragraph). In order for the Swipe program to enable these stroke gestures, a separate launcher program is required (Swipe/ page 2, first two full paragraphs; and "Desk Accessories", submitted in an IDS filed June 12, 2012, the section entitled "How it works" on pages 1 - 2). Swipe causes the launcher program to execute a Desk Accessory function in response to one of the Swipe gestures (ibid.).

Irvine describes a mouse-based graphical user interface whereby functions are activated in response to specific cursor movements instead of mouse clicks (Irvine/ col. 3, lines 16 - 23). In particular, when a mouse cursor passes over a function icon, instead of the user clicking a mouse button, markers are displayed on the screen; the user moves the cursor onto one or more of the markers in order to activate the icon's function (Irvine/ col. 19, line 62 - col. 20, line 24, and the definition of "pointer" in col. 16, lines 18 - 21). Irvine extends his invention to touch screens as well. In the case of a touch screen, Irvine's gesture is a series of touches or taps at the various indicated marker locations (Irvine/ col. 79, lines 1 – 16, 31 – 38 and 48 - 54).

Brief Discussion of Additional Reference

US Publication No. 2002/0015064 A1 to **Robotham** et al. ("Robotham"), cited in the Office Action, discusses a user interface for manipulating a graphic on a display (Robotham/ paragraph [0238]). Robotham discusses swipe and drag gestures for zooming in on a portion of an image (Robotham/ paragraphs [0254], [0269] and [0276]).

US Patent No. 8,127,141 to **Hyppönen** ("Hyppönen"), cited in applicant's Information Disclosure Statement of July 23, 2012, discusses a method of entering a password on a computer system by

manipulating a set of slider controls (Hyppönen/ col. 4, lines 27 – 78; Abstract). A user moves a selector on each slider with a pen or other pointer, and the final slider positions are combined into a password (Hyppönen/ col. 7, lines 14 – 17; FIGS. 2 and 3). Hyppönen transitions from a locked state to an unlocked state in response to entering a password, but not in response to a gesture (Hyppönen/ col. 8, lines 1 – 8).

Response to Office Action Rejections

Applicant has amended claim **21** to recite the feature of a tap-disabled state, wherein tap-activatable icons are absent, comprising a touch sensitive area in which is provided a graphic for transitioning the user interface from the tap-disabled state to the home state in response to a multi-step user gesture. Applicant respectfully submits that, in distinction, Carlson, Pogue, Swipe and Gough all include tap-activatable icons when a user gesture is performed. Thus the PALM PILOT®, discussed by Carlson, Pogue and Swipe, includes silkscreened buttons, shown in FIG. 1.1 above, that are activatable by a tap. Gough's keyboard icon is activatable by a tap gesture (Gough/ col. 6, lines 44 – 47).

On page 4, in rejecting claim **21** the Office Action states that "*the combination of Pogue and Swipe would have yielded predictable results, namely starting on the representation of the applications silk screen area, swiping up to launch the application main page*".

However, applicant respectfully submits that it was impossible at the time of the invention to use Swipe to transition to a home state as in claim **21**. Although Swipe states that "*all the normal actions are supported*", Swipe's intent is to the normal actions supported by the Ronomatic stroke namely,

(vi) turning a backlight on and off;

(vii) opening a keyboard;

(viii) opening a graffiti help;

(ix) locking the Palm; and

(x) sending a currently selected memo, to-do-item, calendar appointment or address book entry to a nearby Palm device within infrared range.

Swipe states, regarding the actions supported by Swipe (emphasis added):

"*You may choose what action to associate with each swipe from pop-up lists on the configuration screen. Choosing '- None -' will disable that swipe. The* ***five built-in actions*** *available are identical to the options available to the system action* [i.e., the Ronomatic stroke] *on a PalmOS v3.0 machine. Depending on your hardware, not all of these actions may be functional.*"

"*In addition, if you have any* ***Desk Accessories*** *(DA) installed on your machine, they will appear in the action list after the built in actions and separated by a line. A DA is a special kind of application that lets you check the date, see how much memory is available, look up a phone number, or practically anything else,* ***all without leaving the application you are currently working in****. To find out more about DA technology, visit the DA page at www.doublebang.com.*"

Activating a home state, as in claim **21**, is not one of the built in options for the Ronomatic stroke, nor is it a Desk Accessory, nor is it the result of activating a function that can be integrated with Swipe. Therefore, it was not possible at the time of the invention to use Swipe to transition to a home state.

Applicant further submits that at the time of the invention, tap gestures were the most intuitive gestures for selecting and activating graphic user interface elements on a touch screen. It was

therefore counterintuitive, at the time of the invention, to provide a graphic representation of a function in a touch screen user interface and not enable activating the function in response to a tap gesture on the representation. This argument is supported by US Patent No. 6,757,001 B2 to Allport, cited in the Office Action, which states that:

"However, for devices with graphical touch-screens, the natural interaction method is to point one's finger at an icon by touching the screen, and have it activated immediately. In this case, there is no distinction possible between "pointing" and "clicking". Some touch-screen-based applications do create this distinction using a pen, and requiring that the pen be tapped twice in quick succession in order to create a "click", whereas just touching the pen once to the touch-screen surface constitutes a "point". But this is an awkward interaction style, especially if one is using one's finger instead of a physical pen." (Allport/ col. 3, lines 40 – 50)

On page 6, in rejecting claim **38** the Office Action cites Irvine as teaching a click simulation event where a tap alone does not cause transition to the home state. However, the passage in Irvine cited by the Office Action (Irvine/ col. 8, lines 6 - 25) discusses a mouse-based user interface, not a touch screen (Irvine/ col. 5, lines 64 – 66 and col. 6, lines 20 - 23). Irvine replaces the *mouse-click* event with moving the mouse pointer on the screen (Irvine/ col. 7, line 66 - col. 8, line 2). Moreover, later in Irvine where a touch screen is discussed, Irvine explains that a touch screen is different than a mouse-based user interface in that the touch screen or touch pad does not require consecutive movement of the pointer (Irvine, col. 79, lines 1 - 8). Therefore, in distinction to <u>moving</u> the mouse cursor along the path indicated by the different screen markers, the programming of the movement of the pointer in a touch screen involves "*<u>jumping</u> to area 321,*

then area 322," (ibid.) in other words a series of taps. This is further evident from Irvine col. 79, lines 28 – 31, where Irvine explains that a sequence of button presses confirms the intended action. Thus, for a touch screen Irvine teaches touching an icon to activate the function represented by the icon, followed by a series of specific button presses to confirm that the function was intended. As such, applicant respectfully submits that Irvine does not teach disabling the standard touch gesture on a function representation, but only requiring additional tap gestures to confirm the function selection.

The rejections of the claims under 35 U.S.C. §103 will now be dealt with specifically.

Claims 21, 37 and 39 - 42

Independent claim **21** for a computer readable storage medium, as amended, recites the features of

"*a **home state** comprising a plurality of tap-activatable icons for a respective plurality of pre-designated system functions, each system function being activated in response to a tap on its respective icon*", and

"*a **tap-disabled state**, wherein tap-activatable icons are absent, comprising a touch sensitive area in which is provided a **graphic** for transitioning the user interface from the tap-disabled state to the home state in response to a multi-step user gesture comprising (i) an object **touching** the touch sensitive area at a location where the graphic is provided, **and** (ii) the object **gliding** along the touch sensitive area away from the touched location*".

As explained hereinabove, these features are neither shown nor suggested in Pogue, Swipe, Carlson, Gough or Irvine.

Because claims **37** and **39** – **42** depend from claim **21** and include additional features, applicants respectfully submit that claims **37** and **39** – **42** are not anticipated or rendered obvious by Pogue, Swipe, Carlson, Gough or Irvine, taken alone or in combination.

Accordingly claims **21**, **37** and **39** – **42** are deemed to be allowable.

Support for New and Amended Claims in Original Specification

Independent claim **21** for a computer readable storage medium has been amended to include the feature of a home state comprising a plurality of tap-activatable icons for a respective plurality of pre-designated system functions, each system function being activated in response to a tap on its respective icon. This feature is supported in the original specification at least by FIG. 3.

Claim **21** has also been amended to include the feature of a tap-disabled state, wherein tap-activatable icons are absent, comprising a touch sensitive area in which is provided a graphic for transitioning the user interface from the tap-disabled state to the home state in response to a touch-and-glide user gesture. This feature is supported in the original specification at least by FIG. 1. As explained in the specification at page 5, line 24 – page 6, line 11, activating graphic 21 of FIG. 1 by a touch-and-glide gesture causes the user interface to transition from FIG. 1 to FIG. 3. FIG. 1 shows the tap-disabled state, and FIG. 3 shows the home state.

For the foregoing reasons, applicants respectfully submit that the applicable objections and rejections have been overcome and that the claims are in condition for allowance.

If any matters can be resolved by telephone, applicants request that the Patent and Trademark Office please contact applicants' representative at the telephone number listed below.

Respectfully submitted,

SOQUEL GROUP LLC

Dated: December 20, 2012

/Marc A. Berger/
Marc A. Berger
Reg. No. 44,029

P.O. Box 691
Soquel, CA 95073
(831) 426-8200
Customer No. 75660

Electronic Patent Application Fee Transmittal

Application Number:	13310755
Filing Date:	04-Dec-2011
Title of Invention:	USER INTERFACE
First Named Inventor/Applicant Name:	Magnus Goertz
Filer:	Marc Aron Berger
Attorney Docket Number:	NEONODE.P039

Filed as Large Entity

Utility under 35 USC 111(a) Filing Fees

Description	Fee Code	Quantity	Amount	Sub-Total in USD($)
Basic Filing:				
Request for Prioritized Examination	1817	1	4800	4800
Pages:				
Claims:				
Miscellaneous-Filing:				
Processing Fee, except for Provis. apps	1808	1	130	130
Petition:				
Patent-Appeals-and-Interference:				
Post-Allowance-and-Post-Issuance:				

Description	Fee Code	Quantity	Amount	Sub-Total in USD($)
Extension-of-Time:				
Miscellaneous:				
Request for continued examination	1801	1	930	930
		Total in USD ($)		**5860**

Electronic Acknowledgement Receipt	
EFS ID:	14526271
Application Number:	13310755
International Application Number:	
Confirmation Number:	1066
Title of Invention:	USER INTERFACE
First Named Inventor/Applicant Name:	Magnus Goertz
Customer Number:	75660
Filer:	Marc Aron Berger
Filer Authorized By:	
Attorney Docket Number:	NEONODE.P039
Receipt Date:	20-DEC-2012
Filing Date:	04-DEC-2011
Time Stamp:	13:35:11
Application Type:	Utility under 35 USC 111(a)

Payment information:

Submitted with Payment	yes
Payment Type	Credit Card
Payment was successfully received in RAM	$5860
RAM confirmation Number	18793
Deposit Account	
Authorized User	

File Listing:

Document Number	Document Description	File Name	File Size(Bytes)/ Message Digest	Multi Part /.zip	Pages (if appl.)

1	Request for Continued Examination (RCE)	NEONODE-P039_RequestForContinuedExamination_20DEC2012.pdf	697831 ad954c79a9d14ed959466d1576c8f8d438b64a22	no	3
Warnings:					
Information:					
2	TrackOne Request	NEONODE-P039_TrackOneRequest_12-20-2012.pdf	140484 397bfd56c7f632bdff295baaf397786ffccc461b	no	2
Warnings:					
Information:					
3		NEONODE-P039_Amendment_12-20-2012.pdf	232539 cfd4e0e8791550ad0a5e370e73d9b5a9c9a6bf1d	yes	15

	Multipart Description/PDF files in .zip description		
	Document Description	**Start**	**End**
	Amendment Submitted/Entered with Filing of CPA/RCE	1	1
	Claims	2	5
	Applicant Arguments/Remarks Made in an Amendment	6	15

Warnings:					
Information:					
4	Fee Worksheet (SB06)	fee-info.pdf	33727 97e738218513450 29d6543759044 3dce1f68a300	no	2
Warnings:					
Information:					
			Total Files Size (in bytes):	1104581	

This Acknowledgement Receipt evidences receipt on the noted date by the USPTO of the indicated documents, characterized by the applicant, and including page counts, where applicable. It serves as evidence of receipt similar to a Post Card, as described in MPEP 503.

New Applications Under 35 U.S.C. 111
If a new application is being filed and the application includes the necessary components for a filing date (see 37 CFR 1.53(b)-(d) and MPEP 506), a Filing Receipt (37 CFR 1.54) will be issued in due course and the date shown on this Acknowledgement Receipt will establish the filing date of the application.

National Stage of an International Application under 35 U.S.C. 371
If a timely submission to enter the national stage of an international application is compliant with the conditions of 35 U.S.C. 371 and other applicable requirements a Form PCT/DO/EO/903 indicating acceptance of the application as a national stage submission under 35 U.S.C. 371 will be issued in addition to the Filing Receipt, in due course.

New International Application Filed with the USPTO as a Receiving Office
If a new international application is being filed and the international application includes the necessary components for an international filing date (see PCT Article 11 and MPEP 1810), a Notification of the International Application Number and of the International Filing Date (Form PCT/RO/105) will be issued in due course, subject to prescriptions concerning national security, and the date shown on this Acknowledgement Receipt will establish the international filing date of the application.

PTO/SB/08a (01-10)
Approved for use through 07/31/2012. OMB 0651-0031
U.S. Patent and Trademark Office; U.S. DEPARTMENT OF COMMERCE

Under the Paperwork Reduction Act of 1995, no persons are required to respond to a collection of information unless it contains a valid OMB control number.

INFORMATION DISCLOSURE STATEMENT BY APPLICANT

(Not for submission under 37 CFR 1.99)

Application Number	13310755
Filing Date	2011-12-04
First Named Inventor	Magnus Goertz
Art Unit	2171
Examiner Name	Ryan F. Pitaro
Attorney Docket Number	NEONODE.P039

U.S.PATENTS Remove

Examiner Initial*	Cite No	Patent Number	Kind Code[1]	Issue Date	Name of Patentee or Applicant of cited Document	Pages,Columns,Lines where Relevant Passages or Relevant Figures Appear
	1	5561758	A	1996-10-01	Hocker et al.	
	2	5821933	A	1998-10-13	Keller et al.	
	3	6925611	B2	2005-08-02	SanGiovanni	
	4	7450114	B2	2008-11-11	Anwar	

If you wish to add additional U.S. Patent citation information please click the Add button. Add

U.S.PATENT APPLICATION PUBLICATIONS Remove

Examiner Initial*	Cite No	Publication Number	Kind Code[1]	Publication Date	Name of Patentee or Applicant of cited Document	Pages,Columns,Lines where Relevant Passages or Relevant Figures Appear
	1	20010043198	A1	2001-11-22	Ludtke	
	2	20040141010	A1	2004-07-22	Fitzmaurice et al.	Provisional application no. 60/419,144

If you wish to add additional U.S. Published Application citation information please click the Add button. Add

FOREIGN PATENT DOCUMENTS Remove

INFORMATION DISCLOSURE STATEMENT BY APPLICANT (Not for submission under 37 CFR 1.99)		
	Application Number	13310755
	Filing Date	2011-12-04
	First Named Inventor	Magnus Goertz
	Art Unit	2171
	Examiner Name	Ryan F. Pitaro
	Attorney Docket Number	NEONODE.P039

Examiner Initial*	Cite No	Foreign Document Number[3]	Country Code[2] ¡	Kind Code[4]	Publication Date	Name of Patentee or Applicant of cited Document	Pages,Columns,Lines where Relevant Passages or Relevant Figures Appear	T[5]
	1							☐

If you wish to add additional Foreign Patent Document citation information please click the Add button Add

NON-PATENT LITERATURE DOCUMENTS Remove

Examiner Initials*	Cite No	Include name of the author (in CAPITAL LETTERS), title of the article (when appropriate), title of the item (book, magazine, journal, serial, symposium, catalog, etc), date, pages(s), volume-issue number(s), publisher, city and/or country where published.	T[5]
	1	Brad A. Myers, "Mobile Devices for Control", Mobile HCI 2002, F. Paterno (Ed.), LNCS 2411, pp. 1–8, 2002. Springer-Verlag, Berlin, Heidelberg.	☐
	2	Brad A. Myers, Kin Pou Lie and Bo-Chieh Yang, "Two-Handed Input Using a PDA And a Mouse", CHI '2000, April 1-6, 2000, CHI Letters, Vol. 2, Issue 1, pp. 41-48, 2000, ACM, New York, NY, USA.	☐
	3	Brad A. Myers, "Using Handhelds and PCs Together", Communications of the ACM, November 2001, Vol. 44, No. 11, pp. 34-41, ACM, New York, NY, USA.	☐
	4	Gordon Kurtenbach and William Buxton, "User Learning and Performance with Marking Menus", CHI '94 Proceedings of the SIGCHI Conference on Human factors in Computing Systems, pp. 258-264, ACM, New York, NY, USA.	☐
	5	Gordon Paul Kurtenbach, "The Design and Evaluation of Marking Menus", 1993. Doctoral Thesis, Graduate Department of Computer Science, University of Toronto.	☐
	6	David A. Carr, "Specification of Interface Interaction Objects", CHI '94 Proceedings of the SIGCHI Conference on Human factors in Computing Systems, pp. 372-378, 1994, ACM, New York, NY, USA.	☐
	7	David A. Carr, Ninad Jog, Harsha Prem Kumar, Marko Teittinen and Christopher Ahlberg, "Using Interaction Object Graphs to Specify Graphical Widgets", Tech. Rep. ISR-TR-94-69, September 1994, Institute for Systems Research, University of Maryland, College Park, MD.	☐

INFORMATION DISCLOSURE STATEMENT BY APPLICANT (Not for submission under 37 CFR 1.99)		
	Application Number	13310755
	Filing Date	2011-12-04
	First Named Inventor	Magnus Goertz
	Art Unit	2171
	Examiner Name	Ryan F. Pitaro
	Attorney Docket Number	NEONODE.P039

	8	Catherine Plaisant and Daniel Wallace, "Touchscreen Toggle Switches: Push or Slide? Design Issues and Usability Study", Tech. Rep. CAR-TR-521, November, 1990, Human-Computer Interaction Laboratory,Center for Automation Research, Dept. of Psychology, University of Maryland, College Park, MD.	☐
	9	Mark A. Tapia and Gordon Kurtenbach, "Some Design Refinements and Principles on the Appearance and Behavior of Marking Menus", UIST '95, pp. 189– 95, ACM New York, NY, USA.	☐
	10	Michael McGuffin, Nicolas Burtnyk and Gordon Kurtenbach, "FaST Sliders: Integrating Marking Menus and the Adjustment of Continuous Values", Proc. Graphics Interface, May 2002, pp. 35-42.	☐

If you wish to add additional non-patent literature document citation information please click the Add button Add

EXAMINER SIGNATURE

Examiner Signature		Date Considered	

*EXAMINER: Initial if reference considered, whether or not citation is in conformance with MPEP 609. Draw line through a citation if not in conformance and not considered. Include copy of this form with next communication to applicant.

[1] See Kind Codes of USPTO Patent Documents at www.USPTO.GOV or MPEP 901.04. [2] Enter office that issued the document, by the two-letter code (WIPO Standard ST.3). [3] For Japanese patent documents, the indication of the year of the reign of the Emperor must precede the serial number of the patent document. [4] Kind of document by the appropriate symbols as indicated on the document under WIPO Standard ST.16 if possible. [5] Applicant is to place a check mark here if English language translation is attached.

INFORMATION DISCLOSURE STATEMENT BY APPLICANT (Not for submission under 37 CFR 1.99)		
	Application Number	13310755
	Filing Date	2011-12-04
	First Named Inventor	Magnus Goertz
	Art Unit	2171
	Examiner Name	Ryan F. Pitaro
	Attorney Docket Number	NEONODE.P039

CERTIFICATION STATEMENT

Please see 37 CFR 1.97 and 1.98 to make the appropriate selection(s):

☐ That each item of information contained in the information disclosure statement was first cited in any communication from a foreign patent office in a counterpart foreign application not more than three months prior to the filing of the information disclosure statement. See 37 CFR 1.97(e)(1).

OR

☐ That no item of information contained in the information disclosure statement was cited in a communication from a foreign patent office in a counterpart foreign application, and, to the knowledge of the person signing the certification after making reasonable inquiry, no item of information contained in the information disclosure statement was known to any individual designated in 37 CFR 1.56(c) more than three months prior to the filing of the information disclosure statement. See 37 CFR 1.97(e)(2).

☐ See attached certification statement.

☒ The fee set forth in 37 CFR 1.17 (p) has been submitted herewith.

☒ A certification statement is not submitted herewith.

SIGNATURE

A signature of the applicant or representative is required in accordance with CFR 1.33, 10.18. Please see CFR 1.4(d) for the form of the signature.

Signature	/Marc A. Berger/	Date (YYYY-MM-DD)	2012-10-01
Name/Print	Marc A. Berger	Registration Number	44029

This collection of information is required by 37 CFR 1.97 and 1.98. The information is required to obtain or retain a benefit by the public which is to file (and by the USPTO to process) an application. Confidentiality is governed by 35 U.S.C. 122 and 37 CFR 1.14. This collection is estimated to take 1 hour to complete, including gathering, preparing and submitting the completed application form to the USPTO. Time will vary depending upon the individual case. Any comments on the amount of time you require to complete this form and/or suggestions for reducing this burden, should be sent to the Chief Information Officer, U.S. Patent and Trademark Office, U.S. Department of Commerce, P.O. Box 1450, Alexandria, VA 22313-1450. DO NOT SEND FEES OR COMPLETED FORMS TO THIS ADDRESS. **SEND TO: Commissioner for Patents, P.O. Box 1450, Alexandria, VA 22313-1450.**

Privacy Act Statement

The Privacy Act of 1974 (P.L. 93-579) requires that you be given certain information in connection with your submission of the attached form related to a patent application or patent. Accordingly, pursuant to the requirements of the Act, please be advised that: (1) the general authority for the collection of this information is 35 U.S.C. 2(b)(2); (2) furnishing of the information solicited is voluntary; and (3) the principal purpose for which the information is used by the U.S. Patent and Trademark Office is to process and/or examine your submission related to a patent application or patent. If you do not furnish the requested information, the U.S. Patent and Trademark Office may not be able to process and/or examine your submission, which may result in termination of proceedings or abandonment of the application or expiration of the patent.

The information provided by you in this form will be subject to the following routine uses:

1. The information on this form will be treated confidentially to the extent allowed under the Freedom of Information Act (5 U.S.C. 552) and the Privacy Act (5 U.S.C. 552a). Records from this system of records may be disclosed to the Department of Justice to determine whether the Freedom of Information Act requires disclosure of these record s.

2. A record from this system of records may be disclosed, as a routine use, in the course of presenting evidence to a court, magistrate, or administrative tribunal, including disclosures to opposing counsel in the course of settlement negotiations.

3. A record in this system of records may be disclosed, as a routine use, to a Member of Congress submitting a request involving an individual, to whom the record pertains, when the individual has requested assistance from the Member with respect to the subject matter of the record.

4. A record in this system of records may be disclosed, as a routine use, to a contractor of the Agency having need for the information in order to perform a contract. Recipients of information shall be required to comply with the requirements of the Privacy Act of 1974, as amended, pursuant to 5 U.S.C. 552a(m).

5. A record related to an International Application filed under the Patent Cooperation Treaty in this system of records may be disclosed, as a routine use, to the International Bureau of the World Intellectual Property Organization, pursuant to the Patent Cooperation Treaty.

6. A record in this system of records may be disclosed, as a routine use, to another federal agency for purposes of National Security review (35 U.S.C. 181) and for review pursuant to the Atomic Energy Act (42 U.S.C. 218(c)).

7. A record from this system of records may be disclosed, as a routine use, to the Administrator, General Services, or his/her designee, during an inspection of records conducted by GSA as part of that agency's responsibility to recommend improvements in records management practices and programs, under authority of 44 U.S.C. 2904 and 2906. Such disclosure shall be made in accordance with the GSA regulations governing inspection of records for this purpose, and any other relevant (i.e., GSA or Commerce) directive. Such disclosure shall not be used to make determinations about individuals.

8. A record from this system of records may be disclosed, as a routine use, to the public after either publication of the application pursuant to 35 U.S.C. 122(b) or issuance of a patent pursuant to 35 U.S.C. 151. Further, a record may be disclosed, subject to the limitations of 37 CFR 1.14, as a routine use, to the public if the record was filed in an application which became abandoned or in which the proceedings were terminated and which application is referenced by either a published application, an application open to public inspections or an issued patent.

9. A record from this system of records may be disclosed, as a routine use, to a Federal, State, or local law enforcement agency, if the USPTO becomes aware of a violation or potential violation of law or regulation.

Electronic Patent Application Fee Transmittal	
Application Number:	13310755
Filing Date:	04-Dec-2011
Title of Invention:	USER INTERFACE
First Named Inventor/Applicant Name:	Magnus Goertz
Filer:	Marc Aron Berger
Attorney Docket Number:	NEONODE.P039
Filed as Large Entity	

Utility under 35 USC 111(a) Filing Fees

Description	Fee Code	Quantity	Amount	Sub-Total in USD($)
Basic Filing:				
Pages:				
Claims:				
Miscellaneous-Filing:				
Petition:				
Patent-Appeals-and-Interference:				
Post-Allowance-and-Post-Issuance:				
Extension-of-Time:				

Description	Fee Code	Quantity	Amount	Sub-Total in USD($)
Miscellaneous:				
Submission- Information Disclosure Stmt	1806	1	180	180
		Total in USD ($)		**180**

Electronic Acknowledgement Receipt

EFS ID:	13884924
Application Number:	13310755
International Application Number:	
Confirmation Number:	1066
Title of Invention:	USER INTERFACE
First Named Inventor/Applicant Name:	Magnus Goertz
Customer Number:	75660
Filer:	Marc Aron Berger
Filer Authorized By:	
Attorney Docket Number:	NEONODE.P039
Receipt Date:	01-OCT-2012
Filing Date:	04-DEC-2011
Time Stamp:	18:21:56
Application Type:	Utility under 35 USC 111(a)

Payment information:

Submitted with Payment	yes
Payment Type	Credit Card
Payment was successfully received in RAM	$180
RAM confirmation Number	16437
Deposit Account	
Authorized User	

File Listing:

Document Number	Document Description	File Name	File Size(Bytes)/ Message Digest	Multi Part /.zip	Pages (if appl.)

1	Information Disclosure Statement (IDS) Form (SB08)	NEONODE-P039_InformationDisclosureStatement_10-01-2012.pdf	613732 6754ce305e1d0a2c25c807ac7ccadb9306b535e0	no	5
Warnings:					
Information:					
2	Non Patent Literature	MYERS-1.pdf	1302181 6a348671131c49495f3c7866d65f8ac8621633a3	no	8
Warnings:					
Information:					
3	Non Patent Literature	MYERS-2.pdf	16501343 27600dbb3d3c144405141ef38308dfc3bb5d0e8c	no	8
Warnings:					
Information:					
4	Non Patent Literature	MYERS-3.pdf	288076 c14ac5a330c8d0ebaabe56c6844412ecb7279708	no	8
Warnings:					
Information:					
5	Non Patent Literature	KURTENBACH-4.pdf	1370295 ee6583dc126b8b9f05353ad0c3c78179e8534019	no	201
Warnings:					
Information:					
6	Non Patent Literature	CARR-2.pdf	219276 879d05b59210bb57cc5c28a59322ff593578015b	no	32
Warnings:					
Information:					
7	Non Patent Literature	PLAISANT-2.pdf	809884 ebecb7822bd1d088692a3330719 2f95a2af37c94	no	11
Warnings:					
Information:					
8	Non Patent Literature	TAPIA.pdf	728359 3ede2537ed68cb103551ad602ea4519c7ebf4557	no	7
Warnings:					
Information:					
9	Non Patent Literature	MCGUFFIN.pdf	960899 beaf38503153a9b970d9ad612f7abf58fe719f17	no	7
Warnings:					
Information:					

10	Non Patent Literature	KURTENBACH-3.pdf	12111142 eb0f0c589fc3860ee2cc25872fc9e9c587cd95c5	no	7
Warnings:					
Information:					
11	Non Patent Literature	CARR-1.pdf	80806 5639faa99518cfee9d4573454e6003fd726b191a	no	11
Warnings:					
Information:					
12	Fee Worksheet (SB06)	fee-info.pdf	30276 bcd8f7c8463e60bb5790fcad1cd2a059d28aef99	no	2
Warnings:					
Information:					
		Total Files Size (in bytes):	35016269		

This Acknowledgement Receipt evidences receipt on the noted date by the USPTO of the indicated documents, characterized by the applicant, and including page counts, where applicable. It serves as evidence of receipt similar to a Post Card, as described in MPEP 503.

New Applications Under 35 U.S.C. 111
If a new application is being filed and the application includes the necessary components for a filing date (see 37 CFR 1.53(b)-(d) and MPEP 506), a Filing Receipt (37 CFR 1.54) will be issued in due course and the date shown on this Acknowledgement Receipt will establish the filing date of the application.

National Stage of an International Application under 35 U.S.C. 371
If a timely submission to enter the national stage of an international application is compliant with the conditions of 35 U.S.C. 371 and other applicable requirements a Form PCT/DO/EO/903 indicating acceptance of the application as a national stage submission under 35 U.S.C. 371 will be issued in addition to the Filing Receipt, in due course.

New International Application Filed with the USPTO as a Receiving Office
If a new international application is being filed and the international application includes the necessary components for an international filing date (see PCT Article 11 and MPEP 1810), a Notification of the International Application Number and of the International Filing Date (Form PCT/RO/105) will be issued in due course, subject to prescriptions concerning national security, and the date shown on this Acknowledgement Receipt will establish the international filing date of the application.

UNITED STATES PATENT AND TRADEMARK OFFICE

UNITED STATES DEPARTMENT OF COMMERCE
United States Patent and Trademark Office
Address: COMMISSIONER FOR PATENTS
P.O. Box 1450
Alexandria, Virginia 22313-1450
www.uspto.gov

APPLICATION NO.	FILING DATE	FIRST NAMED INVENTOR	ATTORNEY DOCKET NO.	CONFIRMATION NO.
13/310,755	12/04/2011	Magnus Goertz	NEONODE.P039	1066

75660 7590 09/27/2012

Soquel Group, LLC
P.O. Box 691
Soquel, CA 95073

EXAMINER	
PITARO, RYAN F	
ART UNIT	PAPER NUMBER
2171	

NOTIFICATION DATE	DELIVERY MODE
09/27/2012	ELECTRONIC

Please find below and/or attached an Office communication concerning this application or proceeding.

The time period for reply, if any, is set in the attached communication.

Notice of the Office communication was sent electronically on above-indicated "Notification Date" to the following e-mail address(es):

pto@soquelgroup.com
rblumberg@soquelgroup.com
mberger@soquelgroup.com

Office Action Summary	Application No.	Applicant(s)	
	13/310,755	GOERTZ, MAGNUS	
	Examiner	Art Unit	
	RYAN PITARO	2171	

-- The MAILING DATE of this communication appears on the cover sheet with the correspondence address --

Period for Reply

A SHORTENED STATUTORY PERIOD FOR REPLY IS SET TO EXPIRE 3 MONTH(S) OR THIRTY (30) DAYS, WHICHEVER IS LONGER, FROM THE MAILING DATE OF THIS COMMUNICATION.

- Extensions of time may be available under the provisions of 37 CFR 1.136(a). In no event, however, may a reply be timely filed after SIX (6) MONTHS from the mailing date of this communication.
- If NO period for reply is specified above, the maximum statutory period will apply and will expire SIX (6) MONTHS from the mailing date of this communication.
- Failure to reply within the set or extended period for reply will, by statute, cause the application to become ABANDONED (35 U.S.C. § 133). Any reply received by the Office later than three months after the mailing date of this communication, even if timely filed, may reduce any earned patent term adjustment. See 37 CFR 1.704(b).

Status

1)☒ Responsive to communication(s) filed on *03 July 2012*.

2a)☒ This action is **FINAL**. 2b)☐ This action is non-final.

3)☐ An election was made by the applicant in response to a restriction requirement set forth during the interview on _____; the restriction requirement and election have been incorporated into this action.

4)☐ Since this application is in condition for allowance except for formal matters, prosecution as to the merits is closed in accordance with the practice under *Ex parte Quayle*, 1935 C.D. 11, 453 O.G. 213.

Disposition of Claims

5)☒ Claim(s) *19-21 and 28-42* is/are pending in the application.

5a) Of the above claim(s) *19,20 and 28-36* is/are withdrawn from consideration.

6)☐ Claim(s) _____ is/are allowed.

7)☒ Claim(s) *21 and 37-42* is/are rejected.

8)☐ Claim(s) _____ is/are objected to.

9)☐ Claim(s) _____ are subject to restriction and/or election requirement.

Application Papers

10)☐ The specification is objected to by the Examiner.

11)☐ The drawing(s) filed on _____ is/are: a)☐ accepted or b)☐ objected to by the Examiner.

Applicant may not request that any objection to the drawing(s) be held in abeyance. See 37 CFR 1.85(a).

Replacement drawing sheet(s) including the correction is required if the drawing(s) is objected to. See 37 CFR 1.121(d).

12)☐ The oath or declaration is objected to by the Examiner. Note the attached Office Action or form PTO-152.

Priority under 35 U.S.C. § 119

13)☐ Acknowledgment is made of a claim for foreign priority under 35 U.S.C. § 119(a)-(d) or (f).

a)☐ All b)☐ Some * c)☐ None of:

1.☐ Certified copies of the priority documents have been received.

2.☐ Certified copies of the priority documents have been received in Application No. _____.

3.☐ Copies of the certified copies of the priority documents have been received in this National Stage application from the International Bureau (PCT Rule 17.2(a)).

* See the attached detailed Office action for a list of the certified copies not received.

Attachment(s)

1) ☒ Notice of References Cited (PTO-892)
2) ☐ Notice of Draftsperson's Patent Drawing Review (PTO-948)
3) ☒ Information Disclosure Statement(s) (PTO/SB/08) Paper No(s)/Mail Date *6/12/2012,7/23/2012,8/17/2012*.
4) ☐ Interview Summary (PTO-413) Paper No(s)/Mail Date. _____ .
5) ☐ Notice of Informal Patent Application
6) ☐ Other: _____.

Response to Amendment

This action is in response to the amendment filed 7/3/2012. In the Amendment claims 19,20,28-36 have been withdrawn. Claims 22-27 have been canceled. Claim 21 has been amended. Claims 37-42 were added as new. This action is final.

Claim Rejections - 35 USC § 103

The following is a quotation of 35 U.S.C. 103(a) which forms the basis for all obviousness rejections set forth in this Office action:

> (a) A patent may not be obtained though the invention is not identically disclosed or described as set forth in section 102 of this title, if the differences between the subject matter sought to be patented and the prior art are such that the subject matter as a whole would have been obvious at the time the invention was made to a person having ordinary skill in the art to which said subject matter pertains. Patentability shall not be negatived by the manner in which the invention was made.

Claims 21, 40-41 are rejected under 35 U.S.C. 103(a) as being unpatentable over Pogue, David (“Pogue", “Palm Pilot: The Ultimate Guide, 2nd Edition) in view of swipe_readme.txt., “swipe_readme.txt”).

As per claim 21, Pogue teaches a non-transitory computer readable medium storing instructions, which when executed by a processor of an electronic device (Palm VII), , cause the processor to enable a user interface of the device, the user interface comprising a home state that presents controls for a plurality of pre-designated system

functions (page 33 Applications screen) and a touch sensitive area in which a graphic associated with the home state is provided (Page 33, silk screen application icon) ,

wherein the user interface transitions to the application in response to (ii) the object gliding along the touch sensitive area away from the touched location (see page 28 Figure 2-5, Ronomatic Stroke).

Pogue teaches a stroke of activating an application which can be programmed to activate a homescreen (see page 28 and page 33, See applications silk screened button). However, Pogue does not expressly teach activating a homestate by touching a representation graphic and gliding along the touch sensitive area away from the touched location. Swipe teaches wherein the user interface transitions to the application in response to a multi-step user gesture comprising (i) an object touching the touch sensitive area at a location where the graphic is provided, and (ii) the object gliding along the touch sensitive area away from the touched location (page 1, Swipe allows you to define seven pen actions, each triggered by a simple and quick stroke of the pen. Each swipe is a single pen movement starting in the silkscreen area at the bottom of the device screen and moving into the upper half of the display, All of the normal actions are supported).

It would have been obvious to one of ordinary skill in the art at the time of the invention to combine the teaching of Swipe with the medium of Pogue. Motivation to do so would have been:

The Ronomatic Stroke is delightful and efficient. It's only fault is that there is only one. Swipe gives you six Ronomatic Strokes so that you can summon up to six different

functions, depending on the starting point and direction of drag. The combination of Pogue and Swipe would have yielded predictable results, namely starting on the representation of the applications silk screen area, swiping up to launch the application main page.

As per claim 40, Pogue teaches the computer readable medium of claim 21, wherein the plurality of pre-designated system functions comprises a help function (Pogue, Page 29, Graffiti Help,

As per claim 41, Pogue teaches computer readable medium of claim 21, wherein the plurality of pre-designated system functions comprises a clock function (Pogue, Page 519, Clock Hack).

Claims 39 and 42 are rejected under 35 U.S.C. 103(a) as being unpatentable over Pogue, David (“Pogue", “Palm Pilot: The Ultimate Guide, 2nd Edition) in view of swipe_readme.txt., “swipe_readme.txt”) in view of Carlson, Jeff (“Carlson”, Visual Quickstart Guide Palm Organizers).

As per claim 39, Pogue-Swipe does not expressly teach the application screen. Pogue describes the application shortcut, however Carlson teaches the computer readable medium of claim 21, wherein the home state does not present controls within a window frame (Page 47, Figure 2.36 Applications screen). Therefore it would have been obvious to one of ordinary skill in the art at the time of the invention to combine the

teaching of Carlson with the medium of Pogue-Swipe. Motivation to do so would have been to provide a clean starting screen for a user to select appropriate applications without additional screen clutter.

As per claim 42, Carlson teaches the computer readable medium of claim 21, wherein the plurality of pre-designated system functions comprises an alarm function (Page 47, Figure 2.26 Alarm Hack).

Claim 37 is rejected under 35 U.S.C. 103(a) as being unpatentable over Pogue, David (“Pogue", “Palm Pilot: The Ultimate Guide, 2nd Edition) in view of swipe_readme.txt., “swipe_readme.txt”) in view of Gough et al ("Gough", US 5603053).

As per claim 37, Pogue-Swipe teaches transitioning to a home state, But fails to distinctly point out any movement that beings at a location causes the transition. Gough teaches wherein any state transition elicited by a user gesture that begins at a location at which the graphic is provided, transitions to the application (Column 6 lines 29-40).

Therefore it would have been obvious to one of ordinary skill in the art at the time of the invention to combine the teaching of Pogue-Swipe with the teaching of Gough. Motivation to do so would have been to provide more control to a user.

Claim 38 is rejected under 35 U.S.C. 103(a) as being unpatentable over Pogue, David (“Pogue", “Palm Pilot: The Ultimate Guide, 2nd Edition) in view of swipe_readme.txt., “swipe_readme.txt”) in view of Irvine (“Irvine”, US 7818691).

As per claim 38, Pogue-Swipe fails to point out activating a function by gesture alone. However, Irvine teaches the click simulation event, wherein a tap alone on the graphic does not cause transition to the home state (Column 8 lines 6-25, Functions were previously only activated by the standard click or keyboard are now being activated by pointer movement alone.)

Therefore it would have been obvious to one of ordinary skill in the art at the time of the invention to combine the teaching of Irvine with the medium of Pogue-Swipe. Motivation to do so would have been to eliminate erroneous clicks not meant to trigger a function

Response to Arguments

Applicant’s arguments with respect to claims 21,37-42 have been considered but are moot because the arguments do not apply to any of the references being used in the current rejection.

Conclusion

Applicant's amendment necessitated the new ground(s) of rejection presented in this Office action. Accordingly, **THIS ACTION IS MADE FINAL**. See MPEP § 706.07(a). Applicant is reminded of the extension of time policy as set forth in 37 CFR 1.136(a).

A shortened statutory period for reply to this final action is set to expire THREE MONTHS from the mailing date of this action. In the event a first reply is filed within TWO MONTHS of the mailing date of this final action and the advisory action is not mailed until after the end of the THREE-MONTH shortened statutory period, then the shortened statutory period will expire on the date the advisory action is mailed, and any extension fee pursuant to 37 CFR 1.136(a) will be calculated from the mailing date of the advisory action. In no event, however, will the statutory period for reply expire later than SIX MONTHS from the date of this final action.

Any inquiry concerning this communication or earlier communications from the examiner should be directed to RYAN PITARO whose telephone number is (571)272-4071. The examiner can normally be reached on 9:00am - 5:30pm Mondays through Fridays.

If attempts to reach the examiner by telephone are unsuccessful, the examiner's supervisor, Matt Kim can be reached on 571-272-4182. The fax phone number for the organization where this application or proceeding is assigned is 571-273-8300.

Information regarding the status of an application may be obtained from the Patent Application Information Retrieval (PAIR) system. Status information for published applications may be obtained from either Private PAIR or Public PAIR. Status information for unpublished applications is available through Private PAIR only. For more information about the PAIR system, see http://pair-direct.uspto.gov. Should you have questions on access to the Private PAIR system, contact the Electronic Business Center (EBC) at 866-217-9197 (toll-free). If you would like assistance from a USPTO Customer Service Representative or access to the automated information system, call 800-786-9199 (IN USA OR CANADA) or 571-272-1000.

/Ryan F Pitaro/
Primary Examiner, Art Unit 2171

Notice of References Cited	Application/Control No. 13/310,755	Applicant(s)/Patent Under Reexamination GOERTZ, MAGNUS	
	Examiner RYAN PITARO	Art Unit 2171	Page 1 of 2

U.S. PATENT DOCUMENTS

*		Document Number Country Code-Number-Kind Code	Date MM-YYYY	Name	Classification
*	A	US-5,305,435 A	04-1994	Bronson, Barry	715/777
*	B	US-5,603,053 A	02-1997	Gough et al.	710/5
*	C	US-5,644,628 A	07-1997	Schwarzer et al.	379/93.19
*	D	US-6,088,032 A	07-2000	Mackinlay, Jock D.	715/848
*	E	US-2001/0028365 A1	10-2001	Ludolph, Frank	345/764
*	F	US-2002/0015064 A1	02-2002	Robotham et al.	345/863
*	G	US-2002/0060699 A1	05-2002	D'Agostini, Giovanni	345/783
*	H	US-2002/0135619 A1	09-2002	ALLPORT, DAVID E.	345/810
*	I	US-2002/0191029 A1	12-2002	Gillespie et al.	345/810
*	J	US-2003/0016253 A1	01-2003	Aoki et al.	345/863
*	K	US-6,549,217 B1	04-2003	De Greef et al.	715/745
*	L	US-6,757,001 B2	06-2004	Allport, David E.	715/840
*	M	US-2004/0119763 A1	06-2004	Mizobuchi et al.	345/863

FOREIGN PATENT DOCUMENTS

*		Document Number Country Code-Number-Kind Code	Date MM-YYYY	Country	Name	Classification
	N					
	O					
	P					
	Q					
	R					
	S					
	T					

NON-PATENT DOCUMENTS

*		Include as applicable: Author, Title Date, Publisher, Edition or Volume, Pertinent Pages)
	U	
	V	
	W	
	X	

*A copy of this reference is not being furnished with this Office action. (See MPEP § 707.05(a).)
Dates in MM-YYYY format are publication dates. Classifications may be US or foreign.

Notice of References Cited	Application/Control No. 13/310,755	Applicant(s)/Patent Under Reexamination GOERTZ, MAGNUS	
	Examiner RYAN PITARO	Art Unit 2171	Page 2 of 2

U.S. PATENT DOCUMENTS

*		Document Number Country Code-Number-Kind Code	Date MM-YYYY	Name	Classification
*	A	US-6,757,002 B1	06-2004	Oross et al.	715/864
*	B	US-2007/0263822 A1	11-2007	Chang et al.	379/202.01
*	C	US-7,818,691 B2	10-2010	Irvine, Nes Stewart	715/856
	D	US-			
	E	US-			
	F	US-			
	G	US-			
	H	US-			
	I	US-			
	J	US-			
	K	US-			
	L	US-			
	M	US-			

FOREIGN PATENT DOCUMENTS

*		Document Number Country Code-Number-Kind Code	Date MM-YYYY	Country	Name	Classification
	N					
	O					
	P					
	Q					
	R					
	S					
	T					

NON-PATENT DOCUMENTS

*		Include as applicable: Author, Title Date, Publisher, Edition or Volume, Pertinent Pages)
	U	
	V	
	W	
	X	

*A copy of this reference is not being furnished with this Office action. (See MPEP § 707.05(a).)
Dates in MM-YYYY format are publication dates. Classifications may be US or foreign.

Index of Claims	Application/Control No.	Applicant(s)/Patent Under Reexamination
	13310755	GOERTZ, MAGNUS
	Examiner	Art Unit
	RYAN PITARO	2171

✓	Rejected	-	Cancelled	N	Non-Elected	A	Appeal
=	Allowed	÷	Restricted	I	Interference	O	Objected

☐ Claims renumbered in the same order as presented by applicant ☐ CPA ☐ T.D. ☐ R.1.47

CLAIM		DATE								
Final	Original	05/03/2012	09/17/2012							
	1	-	-							
	2	-	-							
	3	-	-							
	4	-	-							
	5	-	-							
	6	-	-							
	7	-	-							
	8	-	-							
	9	-	-							
	10	-	-							
	11	-	-							
	12	-	-							
	13	-	-							
	14	-	-							
	15	-	-							
	16	-	-							
	17	-	-							
	18	-	-							
	19	✓	N							
	20	✓	N							
	21	✓	✓							
	22	✓	-							
	23	✓	-							
	24	✓	-							
	25	✓	-							
	26	✓	-							
	27	✓	-							
	28	✓	N							
	29	✓	N							
	30	✓	N							
	31	✓	N							
	32	✓	N							
	33	✓	N							
	34	✓	N							
	35	✓	N							
	36	✓	N							

Index of Claims	Application/Control No.	Applicant(s)/Patent Under Reexamination
	13310755	GOERTZ, MAGNUS
	Examiner	Art Unit
	RYAN PITARO	2171

✓	Rejected	-	Cancelled	N	Non-Elected	A	Appeal
=	Allowed	÷	Restricted	I	Interference	O	Objected

☐ Claims renumbered in the same order as presented by applicant ☐ CPA ☐ T.D. ☐ R.1.47

CLAIM		DATE								
Final	Original	05/03/2012	09/17/2012							
	37		✓							
	38		✓							
	39		✓							
	40		✓							
	41		✓							
	42		✓							

Search Notes	Application/Control No.	Applicant(s)/Patent Under Reexamination
	13310755	GOERTZ, MAGNUS
	Examiner	Art Unit
	RYAN PITARO	2171

SEARCHED			
Class	Subclass	Date	Examiner

SEARCH NOTES		
Search Notes	Date	Examiner
EAST	5/3/2012	RFP
Internet	5/3/2012	RFP
Inventor Name	5/3/2012	RFP
IEEE	5/3/2012	RFP
Update Search	9/17/2012	RFP

INTERFERENCE SEARCH			
Class	Subclass	Date	Examiner

PTO/SB/08a (01-10)
Approved for use through 07/31/2012. OMB 0651-0031
U.S. Patent and Trademark Office; U.S. DEPARTMENT OF COMMERCE
Under the Paperwork Reduction Act of 1995, no persons are required to respond to a collection of information unless it contains a valid OMB control number.

INFORMATION DISCLOSURE STATEMENT BY APPLICANT (**Not for submission under 37 CFR 1.99)**		
	Application Number	13310755
	Filing Date	2011-12-04
	First Named Inventor	Magnus Goertz
	Art Unit	2171
	Examiner Name	Ryan F. Pitaro
	Attorney Docket Number	NEONODE.P039

U.S.PATENTS						Remove
Examiner Initial*	Cite No	Patent Number	Kind Code[1]	Issue Date	Name of Patentee or Applicant of cited Document	Pages,Columns,Lines where Relevant Passages or Relevant Figures Appear
/R.P./	1	8127141	B2	2012-02-28	Hypponen	
If you wish to add additional U.S. Patent citation information please click the Add button.						Add

U.S.PATENT APPLICATION PUBLICATIONS						Remove
Examiner Initial*	Cite No	Publication Number	Kind Code[1]	Publication Date	Name of Patentee or Applicant of cited Document	Pages,Columns,Lines where Relevant Passages or Relevant Figures Appear
	1					
If you wish to add additional U.S. Published Application citation information please click the Add button.						Add

FOREIGN PATENT DOCUMENTS							Remove	
Examiner Initial*	Cite No	Foreign Document Number[3]	Country Code[2] i	Kind Code[4]	Publication Date	Name of Patentee or Applicant of cited Document	Pages,Columns,Lines where Relevant Passages or Relevant Figures Appear	T[5]
	1							☐
If you wish to add additional Foreign Patent Document citation information please click the Add button							Add	

NON-PATENT LITERATURE DOCUMENTS			Remove
Examiner Initials*	Cite No	Include name of the author (in CAPITAL LETTERS), title of the article (when appropriate), title of the item (book, magazine, journal, serial, symposium, catalog, etc), date, pages(s), volume-issue number(s), publisher, city and/or country where published.	T[5]

INFORMATION DISCLOSURE STATEMENT BY APPLICANT (Not for submission under 37 CFR 1.99)		
	Application Number	13310755
	Filing Date	2011-12-04
	First Named Inventor	Magnus Goertz
	Art Unit	2171
	Examiner Name	Ryan F. Pitaro
	Attorney Docket Number	NEONODE.P039

/R.P./	1	C. Plaisant and D. Wallace, "Touchscreen toggle design", CHI '92 Proceedings of the SIGCHI Conference on Human Factors in Computing Systems, May 3 - 7, 1992, Pages 667 – 668, ACM New York, NY, USA.	☐

If you wish to add additional non-patent literature document citation information please click the Add button **Add**

EXAMINER SIGNATURE

Examiner Signature	/Ryan Pitaro/	Date Considered	09/17/2012

*EXAMINER: Initial if reference considered, whether or not citation is in conformance with MPEP 609. Draw line through a citation if not in conformance and not considered. Include copy of this form with next communication to applicant.

[1] See Kind Codes of USPTO Patent Documents at www.USPTO.GOV or MPEP 901.04. [2] Enter office that issued the document, by the two-letter code (WIPO Standard ST.3). [3] For Japanese patent documents, the indication of the year of the reign of the Emperor must precede the serial number of the patent document. [4] Kind of document by the appropriate symbols as indicated on the document under WIPO Standard ST.16 if possible. [5] Applicant is to place a check mark here if English language translation is attached.

INFORMATION DISCLOSURE STATEMENT BY APPLICANT (Not for submission under 37 CFR 1.99)		
	Application Number	13310755
	Filing Date	2011-12-04
	First Named Inventor	Magnus Goertz
	Art Unit	2171
	Examiner Name	Ryan F. Pitaro
	Attorney Docket Number	NEONODE.P039

CERTIFICATION STATEMENT

Please see 37 CFR 1.97 and 1.98 to make the appropriate selection(s):

☐ That each item of information contained in the information disclosure statement was first cited in any communication from a foreign patent office in a counterpart foreign application not more than three months prior to the filing of the information disclosure statement. See 37 CFR 1.97(e)(1).

OR

☐ That no item of information contained in the information disclosure statement was cited in a communication from a foreign patent office in a counterpart foreign application, and, to the knowledge of the person signing the certification after making reasonable inquiry, no item of information contained in the information disclosure statement was known to any individual designated in 37 CFR 1.56(c) more than three months prior to the filing of the information disclosure statement. See 37 CFR 1.97(e)(2).

☐ See attached certification statement.

☒ The fee set forth in 37 CFR 1.17 (p) has been submitted herewith.

☒ A certification statement is not submitted herewith.

SIGNATURE

A signature of the applicant or representative is required in accordance with CFR 1.33, 10.18. Please see CFR 1.4(d) for the form of the signature.

Signature	/Marc A. Berger/	Date (YYYY-MM-DD)	2012-07-23
Name/Print	Marc A. Berger	Registration Number	44029

This collection of information is required by 37 CFR 1.97 and 1.98. The information is required to obtain or retain a benefit by the public which is to file (and by the USPTO to process) an application. Confidentiality is governed by 35 U.S.C. 122 and 37 CFR 1.14. This collection is estimated to take 1 hour to complete, including gathering, preparing and submitting the completed application form to the USPTO. Time will vary depending upon the individual case. Any comments on the amount of time you require to complete this form and/or suggestions for reducing this burden, should be sent to the Chief Information Officer, U.S. Patent and Trademark Office, U.S. Department of Commerce, P.O. Box 1450, Alexandria, VA 22313-1450. DO NOT SEND FEES OR COMPLETED FORMS TO THIS ADDRESS. **SEND TO: Commissioner for Patents, P.O. Box 1450, Alexandria, VA 22313-1450.**

Privacy Act Statement

The Privacy Act of 1974 (P.L. 93-579) requires that you be given certain information in connection with your submission of the attached form related to a patent application or patent. Accordingly, pursuant to the requirements of the Act, please be advised that: (1) the general authority for the collection of this information is 35 U.S.C. 2(b)(2); (2) furnishing of the information solicited is voluntary; and (3) the principal purpose for which the information is used by the U.S. Patent and Trademark Office is to process and/or examine your submission related to a patent application or patent. If you do not furnish the requested information, the U.S. Patent and Trademark Office may not be able to process and/or examine your submission, which may result in termination of proceedings or abandonment of the application or expiration of the patent.

The information provided by you in this form will be subject to the following routine uses:

1. The information on this form will be treated confidentially to the extent allowed under the Freedom of Information Act (5 U.S.C. 552) and the Privacy Act (5 U.S.C. 552a). Records from this system of records may be disclosed to the Department of Justice to determine whether the Freedom of Information Act requires disclosure of these record s.

2. A record from this system of records may be disclosed, as a routine use, in the course of presenting evidence to a court, magistrate, or administrative tribunal, including disclosures to opposing counsel in the course of settlement negotiations.

3. A record in this system of records may be disclosed, as a routine use, to a Member of Congress submitting a request involving an individual, to whom the record pertains, when the individual has requested assistance from the Member with respect to the subject matter of the record.

4. A record in this system of records may be disclosed, as a routine use, to a contractor of the Agency having need for the information in order to perform a contract. Recipients of information shall be required to comply with the requirements of the Privacy Act of 1974, as amended, pursuant to 5 U.S.C. 552a(m).

5. A record related to an International Application filed under the Patent Cooperation Treaty in this system of records may be disclosed, as a routine use, to the International Bureau of the World Intellectual Property Organization, pursuant to the Patent Cooperation Treaty.

6. A record in this system of records may be disclosed, as a routine use, to another federal agency for purposes of National Security review (35 U.S.C. 181) and for review pursuant to the Atomic Energy Act (42 U.S.C. 218(c)).

7. A record from this system of records may be disclosed, as a routine use, to the Administrator, General Services, or his/her designee, during an inspection of records conducted by GSA as part of that agency's responsibility to recommend improvements in records management practices and programs, under authority of 44 U.S.C. 2904 and 2906. Such disclosure shall be made in accordance with the GSA regulations governing inspection of records for this purpose, and any other relevant (i.e., GSA or Commerce) directive. Such disclosure shall not be used to make determinations about individuals.

8. A record from this system of records may be disclosed, as a routine use, to the public after either publication of the application pursuant to 35 U.S.C. 122(b) or issuance of a patent pursuant to 35 U.S.C. 151. Further, a record may be disclosed, subject to the limitations of 37 CFR 1.14, as a routine use, to the public if the record was filed in an application which became abandoned or in which the proceedings were terminated and which application is referenced by either a published application, an application open to public inspections or an issued patent.

9. A record from this system of records may be disclosed, as a routine use, to a Federal, State, or local law enforcement agency, if the USPTO becomes aware of a violation or potential violation of law or regulation.

EAST Search History

EAST Search History (Prior Art)

Ref #	Hits	Search Query	DBs	Default Operator	Plurals	Time Stamp
L1	1007	(home desktop) with (sliding swiping gliding flick swipe glide) and @ay<="2002"	US-PGPUB; USPAT; EPO; DERWENT; IBM_TDB	OR	ON	2012/09/17 12:55
L2	8	(home desktop) with (sliding swiping gliding flick swipe glide) and @ay<="2002" and "715"/$.ccls.	US-PGPUB; USPAT; EPO; DERWENT; IBM_TDB	OR	ON	2012/09/17 12:55
L3	0	(home desktop) with (sliding swiping gliding flick swipe glide) with (activat$6 launch short$cut) and @ay<="2002" and "715"/$.ccls.	US-PGPUB; USPAT; EPO; DERWENT; IBM_TDB	OR	ON	2012/09/17 13:31
L4	17	(home desktop) with (sliding swiping gliding flick swipe glide) with (activat$6 launch short$cut) and @ay<="2002"	US-PGPUB; USPAT; EPO; DERWENT; IBM_TDB	OR	ON	2012/09/17 13:31
L5	27	(sliding swiping gliding flick swipe glide) with (activat$6 launch short$cut) and @ay<="2002" and "715"/$.ccls.	US-PGPUB; USPAT; EPO; DERWENT; IBM_TDB	OR	ON	2012/09/17 13:32
L6	81	"5886697"	US-PGPUB; USPAT; EPO; DERWENT; IBM_TDB	OR	ON	2012/09/17 13:50
L7	2	"5886697".pn.	US-PGPUB; USPAT; EPO; DERWENT; IBM_TDB	OR	ON	2012/09/17 13:50
L8	19034809	(activat$7 switch launch) with (app application software icon) with "not" with (click tap)@ay<="2002"	US-PGPUB; USPAT; EPO; DERWENT; IBM_TDB	OR	ON	2012/09/17 14:46
L9	0	(activat$7 switch launch) with (app application software icon) with "not" with (click tap) and @ay<="2002"	US-PGPUB; USPAT; EPO; DERWENT; IBM_TDB	OR	ON	2012/09/17 14:46
L10	0	(activat$7 switch launch) with "not" with (click tap) and @ay<="2002"	US-PGPUB; USPAT; EPO; DERWENT; IBM_TDB	OR	ON	2012/09/17 14:46

L11	0	(activat$7 switch launch) with "not" with (click clicking tap tapping) and @ay<="2002"	US-PGPUB; USPAT; EPO; DERWENT; IBM_TDB	OR	ON	2012/09/17 14:46
L12	0	(activat$7 launch) with "not" with (click clicking tap tapping) and @ay<="2002"	US-PGPUB; USPAT; EPO; DERWENT; IBM_TDB	OR	ON	2012/09/17 14:47
L13	135	(activat$7 launch) with (alone "not" "without") with (click clicking tap tapping) and @ay<="2002"	US-PGPUB; USPAT; EPO; DERWENT; IBM_TDB	OR	ON	2012/09/17 14:47
L14	23	("20020087661" | "20030200505" | "5600778" | "5689667" | "5721853" | "5745116" | "5790115" | "5805167" | "6028271" | "6057844" | "6094197" | "6101498" | "6104400" | "6239803" | "6337698" | "6429846" | "6445383" | "6496206" | "6618063" | "6707443" | "6819345" | "6915489" | "7003734").PN.	US-PGPUB; USPAT; USOCR	OR	ON	2012/09/17 15:04
S1	2	"20080201637"	US-PGPUB; USPAT; EPO; DERWENT; IBM_TDB	OR	ON	2012/05/02 19:01
S2	2	"8015494"	US-PGPUB; USPAT; EPO; DERWENT; IBM_TDB	OR	ON	2012/05/02 19:14
S3	7	widget with combin$7 with clock	US-PGPUB; USPAT; EPO; DERWENT; IBM_TDB	OR	ON	2012/05/02 19:19
S4	4	"2008023528"	US-PGPUB; USPAT; EPO; DERWENT; IBM_TDB	OR	ON	2012/05/02 22:10
S5	2	"20080235285"	US-PGPUB; USPAT; EPO; DERWENT; IBM_TDB	OR	ON	2012/05/02 22:11
S6	4	slide with answer with (hang disconnect)	US-PGPUB; USPAT; EPO; DERWENT; IBM_TDB	OR	ON	2012/05/03 12:30
S7	500	slide with answer	US-PGPUB; USPAT; EPO; DERWENT; IBM_TDB	OR	ON	2012/05/03 12:30

S8	54	slide with answer and "715"/$.ccls.	US-PGPUB; USPAT; EPO; DERWENT; IBM_TDB	OR	ON	2012/05/03 12:30
S9	0	swipe with answer and "715"/$.ccls.	US-PGPUB; USPAT; EPO; DERWENT; IBM_TDB	OR	ON	2012/05/03 12:33
S10	2	"20120052920"	US-PGPUB; USPAT; EPO; DERWENT; IBM_TDB	OR	ON	2012/05/03 12:35
S11	2	answer with ignore with (slide swipe glide)	US-PGPUB; USPAT; EPO; DERWENT; IBM_TDB	OR	ON	2012/05/03 12:43
S12	7555	(keypad keyboard) with (input entry) with (mobile telephone phone) and @ay<="2002"	US-PGPUB; USPAT; EPO; DERWENT; IBM_TDB	OR	ON	2012/05/03 12:53
S13	348	(keypad keyboard) with (input entry) with (mobile telephone phone) and @ay<="2002" and "715"/$.ccls.	US-PGPUB; USPAT; EPO; DERWENT; IBM_TDB	OR	ON	2012/05/03 12:53
S14	263	(keypad keyboard) with (input entry) with (mobile telephone phone) and @ay<="2001" and "715"/$.ccls.	US-PGPUB; USPAT; EPO; DERWENT; IBM_TDB	OR	ON	2012/05/03 12:53
S15	71	(keypad keyboard) with (input entry) with (mobile telephone phone) with (number sms text) and @ay<="2001" and "715"/$.ccls.	US-PGPUB; USPAT; EPO; DERWENT; IBM_TDB	OR	ON	2012/05/03 12:54
S16	3	(touch virtual) near2(keypad keyboard) with (input entry) with (mobile telephone phone) with (number sms text) and @ay<="2001" and "715"/$.ccls.	US-PGPUB; USPAT; EPO; DERWENT; IBM_TDB	OR	ON	2012/05/03 12:54
S17	10	(touch virtual) near2(keypad keyboard) with (input entry) with (mobile telephone phone) and @ay<="2001" and "715"/$.ccls.	US-PGPUB; USPAT; EPO; DERWENT; IBM_TDB	OR	ON	2012/05/03 12:55
S18	18	(touch virtual) near2(keypad keyboard) with (input entry) with (mobile telephone phone) and @ay<="2002" and "715"/$.ccls.	US-PGPUB; USPAT; EPO; DERWENT; IBM_TDB	OR	ON	2012/05/03 12:56
S19	12	("20060088216" | "4763356" | "5159664" | "5363481" | "5500923" | "5974161" | "6084598" | "6243071" | "6424357" | "6791537" | "6810272" | "6944472").PN.	US-PGPUB; USPAT; USOCR	OR	ON	2012/05/03 12:57

S20	13	("4972496" | "5157783" | "5199104" | "5237651" | "5283864" | "5341293" | "5347295" | "5367453" | "5377281" | "5390281" | "5392387" | "5398310" | "5404442").PN.	US-PGPUB; USPAT; USOCR	OR	ON	2012/05/03 12:58
S21	2038	(smartphone (smart near phone)) and @ay<="2002"	US-PGPUB; USPAT; USOCR	OR	ON	2012/05/03 12:59
S22	88	(smartphone (smart near phone)) and @ay<="2002" and (touch virtual) near (keypad keyboard)	US-PGPUB; USPAT; USOCR	OR	ON	2012/05/03 13:00
S23	12	(smartphone (smart near phone)) and @ay<="2002" and (touch virtual) near (keypad keyboard) and sms	US-PGPUB; USPAT; USOCR	OR	ON	2012/05/03 13:01
S24	183	@ay<="2002" and (touch virtual) near (keypad keyboard) and sms	US-PGPUB; USPAT; USOCR	OR	ON	2012/05/03 13:03
S25	5	@ay<="2002" and (touch virtual) near (keypad keyboard) with sms	US-PGPUB; USPAT; USOCR	OR	ON	2012/05/03 13:04
S26	48	@ay<="2002" and (touch virtual) near (keypad keyboard) and sms with phone	US-PGPUB; USPAT; USOCR	OR	ON	2012/05/03 13:04
S27	185	save near4 text with application	US-PGPUB; USPAT; USOCR	OR	ON	2012/05/03 13:11
S28	52	save near4 text with application and @ay<="2002"	US-PGPUB; USPAT; USOCR	OR	ON	2012/05/03 13:12
S29	0	save near4 (string text) with application with (phone sms email) and @ay<="2002"	US-PGPUB; USPAT; USOCR	OR	ON	2012/05/03 13:13
S30	14	save near4 (string text) with (phone sms email) and @ay<="2002"	US-PGPUB; USPAT; USOCR	OR	ON	2012/05/03 13:13
S31	198	(string text) near input with (phone sms email) and @ay<="2002"	US-PGPUB; USPAT; USOCR	OR	ON	2012/05/03 13:15
S32	272	(string text) near2 input with (phone sms email) and @ay<="2002"	US-PGPUB; USPAT; USOCR	OR	ON	2012/05/03 13:16
S33	0	(string text) near2 input with execute with (phone sms email) and @ay<="2002"	US-PGPUB; USPAT; USOCR	OR	ON	2012/05/03 13:16
S34	16	(string text) near2 input with application with (phone sms email) and @ay<="2002"	US-PGPUB; USPAT; USOCR	OR	ON	2012/05/03 13:16
S35	6	(string text) near2 input with option with (phone call sms email) and @ay<="2002"	US-PGPUB; USPAT; USOCR	OR	ON	2012/05/03 13:19
S36	412	(string text) with option with (phone call sms email) and @ay<="2002"	US-PGPUB; USPAT; USOCR	OR	ON	2012/05/03 13:20
S37	43	(string text) with option with (phone call sms email) and @ay<="2002" and "715"/$.ccls.	US-PGPUB; USPAT; USOCR	OR	ON	2012/05/03 13:20

S38	99	(number) with option with (phone call sms email contact) and @ay<="2002" and "715"/$.ccls.	US-PGPUB; USPAT; USOCR	OR	ON	2012/05/03 13:22
S39	2	input near(number) with option with (phone call sms email contact) and @ay<="2002" and "715"/$.ccls.	US-PGPUB; USPAT; USOCR	OR	ON	2012/05/03 13:23
S40	105	input near3 (number) with (phone call sms email contact) and @ay<="2002" and "715"/$.ccls.	US-PGPUB; USPAT; USOCR	OR	ON	2012/05/03 13:25
S41	8	input near3 (number) with option with (phone call sms email contact) and @ay<="2002" and "715"/$.ccls.	US-PGPUB; USPAT; USOCR	OR	ON	2012/05/03 13:25
S42	5	field with (number) with option with (phone call sms email contact) and @ay<="2002" and "715"/$.ccls.	US-PGPUB; USPAT; USOCR	OR	ON	2012/05/03 13:26
S43	99	(number) with option with (phone call sms email contact) and @ay<="2002" and "715"/$.ccls.	US-PGPUB; USPAT; USOCR	OR	ON	2012/05/03 13:27
S44	11	(number) with option with list with (phone call sms email contact) and @ay<="2002" and "715"/$.ccls.	US-PGPUB; USPAT; USOCR	OR	ON	2012/05/03 13:27
S45	0	file near type with switch with (touch tap) and @ay<="2002"	US-PGPUB; USPAT; EPO; DERWENT; IBM_TDB	OR	ON	2012/05/03 14:07
S46	2202	type with switch with (touch tap) and @ay<="2002"	US-PGPUB; USPAT; EPO; DERWENT; IBM_TDB	OR	ON	2012/05/03 14:07
S47	57	(application file app icon) with type with switch with (touch tap) and @ay<="2002"	US-PGPUB; USPAT; EPO; DERWENT; IBM_TDB	OR	ON	2012/05/03 14:07
S48	46	(application file app icon) near switch with (touch tap) and @ay<="2002"	US-PGPUB; USPAT; EPO; DERWENT; IBM_TDB	OR	ON	2012/05/03 14:08
S49	39263	(application file app icon) with (second near2 (set subset)) switch with (touch tap) and @ay<="2002"	US-PGPUB; USPAT; EPO; DERWENT; IBM_TDB	OR	ON	2012/05/03 14:09
S50	13	(application file app icon) with (second near2 (set subset)) with (touch tap) and @ay<="2002"	US-PGPUB; USPAT; EPO; DERWENT; IBM_TDB	OR	ON	2012/05/03 14:09
S51	505	(application) with data with (second near2 (set subset)) and @ay<="2002"	US-PGPUB; USPAT; EPO; DERWENT; IBM_TDB	OR	ON	2012/05/03 14:13
S52	8	(application) with data with (second near2 (set subset)) with (switch) and	US-PGPUB; USPAT;	OR	ON	2012/05/03 14:13

		@ay<="2002"	EPO; DERWENT; IBM_TDB			
S53	0	(application) with data with (second near2 (set subset)) with (toggle) and @ay<="2002"	US-PGPUB; USPAT; EPO; DERWENT; IBM_TDB	OR	ON	2012/05/03 14:14
S54	41014	file near type (second near2 (set subset)) with (toggle) and @ay<="2002"	US-PGPUB; USPAT; EPO; DERWENT; IBM_TDB	OR	ON	2012/05/03 14:14
S55	0	file near type with (second near2 (set subset)) with (toggle) and @ay<="2002"	US-PGPUB; USPAT; EPO; DERWENT; IBM_TDB	OR	ON	2012/05/03 14:14
S56	2	file near type with (toggle) and @ay<="2002"	US-PGPUB; USPAT; EPO; DERWENT; IBM_TDB	OR	ON	2012/05/03 14:14
S57	44	file near type with (switch) and @ay<="2002"	US-PGPUB; USPAT; EPO; DERWENT; IBM_TDB	OR	ON	2012/05/03 14:15
S58	3	"20080120576"	US-PGPUB; USPAT; EPO; DERWENT; IBM_TDB	OR	ON	2012/05/03 17:57
S59	2	"20080198178"	US-PGPUB; USPAT; EPO; DERWENT; IBM_TDB	OR	ON	2012/05/03 18:00
S60	42	zoom with circ$8 with boundary	US-PGPUB; USPAT; EPO; DERWENT; IBM_TDB	OR	ON	2012/05/03 18:01
S61	22	zoom with circ$8 with boundary and @ay<="2001"	US-PGPUB; USPAT; EPO; DERWENT; IBM_TDB	OR	ON	2012/05/03 18:01
S62	26	zoom with circ$8 with boundary and @ay<="2003"	US-PGPUB; USPAT; EPO; DERWENT; IBM_TDB	OR	ON	2012/05/03 18:01
S63	0	zoom$7 with circ$8 with boundary and @ay<="2003" and "715"/$.ccls.	US-PGPUB; USPAT; EPO; DERWENT; IBM_TDB	OR	ON	2012/05/03 18:01
S64	0	zoom$7 with clockwise with boundary and @ay<="2003" and	US-PGPUB; USPAT;	OR	ON	2012/05/03 18:02

		"715"/$.ccls.	EPO; DERWENT; IBM_TDB			
S65	0	zoom$7 with clockwise same boundary and @ay<="2003" and "715"/$.ccls.	US-PGPUB; USPAT; EPO; DERWENT; IBM_TDB	OR	ON	2012/05/03 18:02
S66	2	zoom$7 with circ$7 same boundary and @ay<="2003" and "715"/$.ccls.	US-PGPUB; USPAT; EPO; DERWENT; IBM_TDB	OR	ON	2012/05/03 18:02
S67	5	zoom$7 with (clockwise radial circ$7) same2 (perimter boundary) and @ay<="2003" and "715"/$.ccls.	US-PGPUB; USPAT; EPO; DERWENT; IBM_TDB	OR	ON	2012/05/03 18:04
S68	26	("20010009428" | "20020085037" | "20020101458" | "20020122072" | "20040021647" | "4931783" | "5276795" | "5581670" | "5627960" | "5634064" | "5638523" | "5666499" | "5689667" | "5760773" | "5798752" | "6037937" | "6097387" | "6118427" | "6246411" | "6262719" | "6369837" | "6549219" | "6865719" | "6918091" | "6938221" | "7058902").PN.	US-PGPUB; USPAT; USOCR	OR	ON	2012/05/03 18:05
S69	110	("5638523").URPN.	USPAT	OR	ON	2012/05/03 18:06
S70	0	lock with help with clock with setting	USPAT	OR	ON	2012/05/03 21:16
S71	1	"6346935".pn.	USPAT	OR	ON	2012/05/03 21:17
S72	6	"20040021643"	US-PGPUB; USPAT; EPO; JPO; DERWENT; IBM_TDB	OR	ON	2012/05/03 21:18
S73	2	"20020027549"	US-PGPUB; USPAT; EPO; JPO; DERWENT; IBM_TDB	OR	ON	2012/05/03 21:19
S74	0	profile with application with each with user	US-PGPUB; USPAT; EPO; JPO; DERWENT; IBM_TDB	OR	ON	2012/05/03 21:47
S75	16148	profile with application with user	US-PGPUB; USPAT; EPO; JPO; DERWENT; IBM_TDB	OR	ON	2012/05/03 21:47
S76	339	profile with application with multiple near3 user	US-PGPUB; USPAT; EPO; JPO; DERWENT; IBM_TDB	OR	ON	2012/05/03 21:47

S77	43	profile with application with multiple near3 user and "715"/$.ccls.	US-PGPUB; USPAT; EPO; JPO; DERWENT; IBM_TDB	OR	ON	2012/05/03 21:47
S78	1	profile with icons with multiple near3 user and "715"/$.ccls.	US-PGPUB; USPAT; EPO; JPO; DERWENT; IBM_TDB	OR	ON	2012/05/03 21:51
S79	38	(application software program apps widgets) with multiple near3 user near3 profile and "715"/$.ccls.	US-PGPUB; USPAT; EPO; JPO; DERWENT; IBM_TDB	OR	ON	2012/05/03 21:52
S80	2	"5914709".pn.	US-PGPUB; USPAT; EPO; JPO; DERWENT; IBM_TDB	OR	ON	2012/05/03 22:05
S81	2	"6292179".pn.	US-PGPUB; USPAT; EPO; JPO; DERWENT; IBM_TDB	OR	ON	2012/05/03 22:05
S82	2	"5618232".pn.	US-PGPUB; USPAT; EPO; JPO; DERWENT; IBM_TDB	OR	ON	2012/05/03 22:06
S83	2	"20050253818"	US-PGPUB; USPAT; EPO; JPO; DERWENT; IBM_TDB	OR	ON	2012/05/03 22:06
S84	2	"7030861".pn.	US-PGPUB; USPAT; EPO; JPO; DERWENT; IBM_TDB	OR	ON	2012/05/03 22:07
S85	2	"5603053".pn.	US-PGPUB; USPAT; EPO; JPO; DERWENT; IBM_TDB	OR	ON	2012/05/03 22:07
S86	64	"240336"	US-PGPUB; USPAT; EPO; DERWENT; IBM_TDB	OR	ON	2012/05/03 22:31
S87	2	"240336"	EPO	OR	ON	2012/05/03 22:31
S88	1	"20070252822"	US-PGPUB; USPAT; USOCR	OR	ON	2012/05/09 09:52
S89	1	"20100056221"	US-PGPUB; USPAT; USOCR	OR	ON	2012/05/09 10:00
S90	3	"7475333"	US-PGPUB;	OR	ON	2012/05/09

			USPAT; USOCR			11:08
S91	1	"20060236264"	US-PGPUB; USPAT; USOCR	OR	ON	2012/05/09 14:13
S92	1	"5933141".pn.	US-PGPUB; USPAT; USOCR	OR	ON	2012/05/09 14:28
S93	1	"20090328122"	US-PGPUB; USPAT; USOCR	OR	ON	2012/05/09 15:05
S94	1	"20080261569"	US-PGPUB; USPAT; USOCR	OR	ON	2012/05/09 15:29
S95	1	"7797226".pn.	US-PGPUB; USPAT; USOCR	OR	ON	2012/05/09 15:57
S96	1	"5347295".pn.	US-PGPUB; USPAT; USOCR	OR	ON	2012/05/10 13:54
S97	1	"5491495".pn.	US-PGPUB; USPAT; USOCR	OR	ON	2012/05/10 14:19
S98	1	"6954904".pn.	US-PGPUB; USPAT; USOCR	OR	ON	2012/05/10 18:16
S99	561	simics	US-PGPUB; USPAT; USOCR	OR	ON	2012/05/10 19:13
S100	1	simics and virtutech.as.	US-PGPUB; USPAT; USOCR	OR	ON	2012/05/10 19:13
S101	3	simics and "715"/$.ccls.	US-PGPUB; USPAT; USOCR	OR	ON	2012/05/10 19:13
S102	10	swipe with home near screen	US-PGPUB; USPAT; EPO; DERWENT; IBM_TDB	OR	ON	2012/09/11 15:10
S103	42	(gesture glide flick swipe) with home near screen	US-PGPUB; USPAT; EPO; DERWENT; IBM_TDB	OR	ON	2012/09/11 15:11
S104	0	(gesture glide flick swipe) with home near screen and @ay<="2002"	US-PGPUB; USPAT; EPO; DERWENT; IBM_TDB	OR	ON	2012/09/11 15:12
S105	99	(gesture glide flick swipe) with home and @ay<="2002"	US-PGPUB; USPAT; EPO; DERWENT; IBM_TDB	OR	ON	2012/09/11 15:12
S106	16	("5500935" | "5760773" | "20060267966" | "20050050476" | "20040021643" | "20050134578" |	US-PGPUB; USPAT; EPO;	OR	ON	2012/09/11 15:15

		"5926178" | "20050190147").PN.	DERWENT; IBM_TDB			
S107	453	activat$7 with home near3 (state screen)	US-PGPUB; USPAT; EPO; DERWENT; IBM_TDB	OR	ON	2012/09/11 15:21
S108	3	activat$7 with home near3 (state screen) with (gesture flick swipe finger glide)	US-PGPUB; USPAT; EPO; DERWENT; IBM_TDB	OR	ON	2012/09/11 15:21
S109	8615	activat$7 with (gesture flick swipe finger glide) and @ay<="2002"	US-PGPUB; USPAT; EPO; DERWENT; IBM_TDB	OR	ON	2012/09/11 15:24
S110	50	activat$7 with (gesture flick swipe finger glide) with icon and @ay<="2002"	US-PGPUB; USPAT; EPO; DERWENT; IBM_TDB	OR	ON	2012/09/11 15:25
S111	5	("5345543" | "5347295" | "5386219" | "5398310" | "5404442").PN.	US-PGPUB; USPAT; USOCR	OR	ON	2012/09/11 15:33
S112	76	(start activat$7 switch) with (drag dragging slide sliding swiping gliding gesture flick swipe finger glide) with (home main idle start) near3 (screen page) and @ay<="2002"	US-PGPUB; USPAT; EPO; DERWENT; IBM_TDB	OR	ON	2012/09/11 15:40
S113	101	(start activat$7 switch) with (drag dragging slide sliding swiping gliding gesture flick swipe finger glide stroke) with (home main idle start) near3 (screen page) and @ay<="2002"	US-PGPUB; USPAT; EPO; DERWENT; IBM_TDB	OR	ON	2012/09/11 15:47
S114	2	"7657849".pn.	US-PGPUB; USPAT; EPO; DERWENT; IBM_TDB	OR	ON	2012/09/11 15:49
S115	47	("20010011308" | "20010012022" | "20020015024" | "20020196274" | "20030142138" | "20040030934" | "20040034801" | "20040085351" | "20040088568" | "20040230843" | "20040250138" | "20040260955" | "20040268267" | "20050050477" | "20050060554" | "20050079896" | "20050212760" | "20050216862" | "20050248542" | "20050253817" | "20050264833" | "20060174339" | "20060267955" | "20080034292" | "20080072172" | "5465084" | "5559961" | "5677710" | "5821933" | "5907327" | "6151208" | "6160555" | "6192478" | "6249606" | "6323846" | "6347290" | "6421453" | "6570557" | "6573883" | "6633310" | "6677932" | "6720860" | "6735695" | "7124433"	US-PGPUB; USPAT; USOCR	OR	ON	2012/09/11 15:49

		| "7151843" | "7174462" | "7263670").PN.				
S116	0	(shortcut) with (drag dragging slide sliding swiping gliding gesture flick swipe finger glide stroke) with (home main idle start) near3 (screen page) and @ay<="2002"	US-PGPUB; USPAT; EPO; DERWENT; IBM_TDB	OR	ON	2012/09/11 15:56
S117	0	(short$cut) with (drag dragging slide sliding swiping gliding gesture flick swipe finger glide stroke) with (home main idle start) near3 (screen page) and @ay<="2002"	US-PGPUB; USPAT; EPO; DERWENT; IBM_TDB	OR	ON	2012/09/11 15:56
S118	114	(short$cut) with (drag dragging slide sliding swiping gliding gesture flick swipe finger glide stroke) and @ay<="2002"	US-PGPUB; USPAT; EPO; DERWENT; IBM_TDB	OR	ON	2012/09/11 15:56
S119	2	"20080010294"	US-PGPUB; USPAT; EPO; DERWENT; IBM_TDB	OR	ON	2012/09/12 11:58
S120	766	(trend trending) with tag	US-PGPUB; USPAT; EPO; DERWENT; IBM_TDB	OR	ON	2012/09/12 12:05
S121	20	(trend trending) with tag and "715"/$.ccls.	US-PGPUB; USPAT; EPO; DERWENT; IBM_TDB	OR	ON	2012/09/12 12:05
S122	3	(trend trending) with tag same (alert notif$7 indicat$7) and "715"/$.ccls.	US-PGPUB; USPAT; EPO; DERWENT; IBM_TDB	OR	ON	2012/09/12 12:07
S123	2	"20090292723"	US-PGPUB; USPAT; EPO; DERWENT; IBM_TDB	OR	ON	2012/09/12 14:14
S124	3	"20080178067"	US-PGPUB; USPAT; EPO; DERWENT; IBM_TDB	OR	ON	2012/09/12 14:22
S125	107	"5276785"	US-PGPUB; USPAT; EPO; DERWENT; IBM_TDB	OR	ON	2012/09/13 12:24
S126	2	"5276785".pn.	US-PGPUB; USPAT; EPO; DERWENT; IBM_TDB	OR	ON	2012/09/13 12:24
S127	3	"20080040668"	US-PGPUB; USPAT; EPO;	OR	ON	2012/09/13 12:59

			DERWENT; IBM_TDB			
S128	25	email with automatic with (greetin signature)	US-PGPUB; USPAT; EPO; DERWENT; IBM_TDB	OR	ON	2012/09/13 13:15
S129	59	email with automatic with (greeting signature)	US-PGPUB; USPAT; EPO; DERWENT; IBM_TDB	OR	ON	2012/09/13 13:18
S130	3	"20080040668"	US-PGPUB; USPAT; EPO; DERWENT; IBM_TDB	OR	ON	2012/09/13 13:35
S131	2	"20100191701"	US-PGPUB; USPAT; EPO; DERWENT; IBM_TDB	OR	ON	2012/09/13 13:35
S132	2	"20100191701"	US-PGPUB; USPAT; EPO; DERWENT; IBM_TDB	OR	ON	2012/09/13 13:41
S133	3	"20070263822"	US-PGPUB; USPAT; EPO; DERWENT; IBM_TDB	OR	ON	2012/09/13 14:56
S134	2	"20080082627"	US-PGPUB; USPAT; EPO; DERWENT; IBM_TDB	OR	ON	2012/09/13 15:31
S135	2	"20060149630"	US-PGPUB; USPAT; EPO; DERWENT; IBM_TDB	OR	ON	2012/09/13 15:31
S136	101	(start activat$7 switch launch) with (drag dragging slide sliding swiping gliding gesture flick swipe finger glide stroke) with (home main idle start) near3 (screen page) and @ay<="2002"	US-PGPUB; USPAT; EPO; DERWENT; IBM_TDB	OR	ON	2012/09/14 10:44
S137	364	(start activat$7 switch launch) with (drag dragging slide sliding swiping gliding gesture flick swipe glide stroke) with (icon) and @ay<="2002"	US-PGPUB; USPAT; EPO; DERWENT; IBM_TDB	OR	ON	2012/09/14 10:51
S138	2225	(start activat$7 switch launch) with (drag dragging slide sliding swiping gliding gesture flick swipe glide stroke) with (edge) and @ay<="2002"	US-PGPUB; USPAT; EPO; DERWENT; IBM_TDB	OR	ON	2012/09/14 10:58
S139	5	(start activat$7 switch launch) with (drag dragging slide sliding swiping	US-PGPUB; USPAT;	OR	ON	2012/09/14 10:59

		gliding gesture flick swipe glide stroke) with (edge corner) near screen and @ay<="2002"	EPO; DERWENT; IBM_TDB			
S140	11	(start activat$7 switch launch) with (drag dragging slide sliding swiping gliding gesture flick swipe glide stroke) with (edge corner) near3 screen and @ay<="2002"	US-PGPUB; USPAT; EPO; DERWENT; IBM_TDB	OR	ON	2012/09/14 11:00
S141	30	(start activat$7 switch launch) with (drag dragging slide sliding swiping gliding gesture flick swipe glide stroke) with (edge corner) and "715"/$.ccls. and @ay<="2002"	US-PGPUB; USPAT; EPO; DERWENT; IBM_TDB	OR	ON	2012/09/14 11:03
S142	16	("20020063696" | "20020109677" | "5644628" | "5745116" | "5943039" | "6037937" | "6310610" | "6618063").PN.	US-PGPUB; USPAT; EPO; DERWENT; IBM_TDB	OR	ON	2012/09/14 11:54
S143	2	("8127141").PN.	US-PGPUB; USPAT; EPO; DERWENT; IBM_TDB	OR	ON	2012/09/14 12:02
S144	2	swipe near gesture and @ay<="2002"	US-PGPUB; USPAT; EPO; DERWENT; IBM_TDB	OR	ON	2012/09/14 12:03
S145	1141	(start activat$7 switch launch) with (drag dragging slide sliding swiping gliding gesture flick swipe glide stroke) and "715"/$.ccls. and @ay<="2002"	US-PGPUB; USPAT; EPO; DERWENT; IBM_TDB	OR	ON	2012/09/14 12:10
S146	437	(activat$7 switch launch) with (slide sliding swiping gliding gesture flick swipe glide stroke) and "715"/$.ccls. and @ay<="2002"	US-PGPUB; USPAT; EPO; DERWENT; IBM_TDB	OR	ON	2012/09/14 12:10
S147	350	(activat$7 switch launch) with (slide sliding swiping gliding flick swipe glide stroke) and "715"/$.ccls. and @ay<="2002"	US-PGPUB; USPAT; EPO; DERWENT; IBM_TDB	OR	ON	2012/09/14 12:11
S148	206	(activat$7 switch launch) with (slide sliding swiping gliding flick swipe glide) and "715"/$.ccls. and @ay<="2002"	US-PGPUB; USPAT; EPO; DERWENT; IBM_TDB	OR	ON	2012/09/14 12:11
S149	56	(activat$7 switch launch) with (sliding swiping gliding flick swipe glide) and "715"/$.ccls. and @ay<="2002"	US-PGPUB; USPAT; EPO; DERWENT; IBM_TDB	OR	ON	2012/09/14 12:11
S150	0	(activat$7 switch launch) with (sliding swiping gliding flick swipe glide) same desk with accessories and "715"/$.ccls. and @ay<="2002"	US-PGPUB; USPAT; EPO; DERWENT; IBM_TDB	OR	ON	2012/09/14 15:31
S151	0	(activat$7 switch launch) with (sliding swiping gliding flick swipe	US-PGPUB; USPAT;	OR	ON	2012/09/14 15:31

		glide) same desk with "accessories." and @ay<="2002"	EPO; DERWENT; IBM_TDB			
S152	1	(activat$7 switch launch) with (sliding swiping gliding flick swipe glide) same desk with accessories and @ay<="2002"	US-PGPUB; USPAT; EPO; DERWENT; IBM_TDB	OR	ON	2012/09/14 15:31
S153	14905	"swipe!"	US-PGPUB; USPAT; EPO; DERWENT; IBM_TDB	OR	ON	2012/09/14 15:31
S154	0	"swipe" with DA	US-PGPUB; USPAT; EPO; DERWENT; IBM_TDB	OR	ON	2012/09/14 15:32
S155	0	"swipe" with Desk near accessor$6	US-PGPUB; USPAT; EPO; DERWENT; IBM_TDB	OR	ON	2012/09/14 15:32
S156	0	launch with desk near accessor$6	US-PGPUB; USPAT; EPO; DERWENT; IBM_TDB	OR	ON	2012/09/14 15:32
S157	0	shortcut with (sliding swiping gliding flick swipe glide) and "715"/$.ccls. and @ay<="2002"	US-PGPUB; USPAT; EPO; DERWENT; IBM_TDB	OR	ON	2012/09/14 15:33
S158	2	short$cut with (sliding swiping gliding flick swipe glide) and "715"/$.ccls. and @ay<="2002"	US-PGPUB; USPAT; EPO; DERWENT; IBM_TDB	OR	ON	2012/09/14 15:34

EAST Search History (Interference)

<This search history is empty>

9/17/2012 3:35:41 PM
C:\Users\rpitaro\Documents\EAST\Workspaces\13310755.wsp

PTO/SB/08a (01-10)
Approved for use through 07/31/2012. OMB 0651-0031
U.S. Patent and Trademark Office; U.S. DEPARTMENT OF COMMERCE

Under the Paperwork Reduction Act of 1995, no persons are required to respond to a collection of information unless it contains a valid OMB control number.

INFORMATION DISCLOSURE STATEMENT BY APPLICANT
(Not for submission under 37 CFR 1.99)

Application Number	13310755
Filing Date	2011-12-04
First Named Inventor	Magnus Goertz
Art Unit	2171
Examiner Name	Ryan F. Pitaro
Attorney Docket Number	NEONODE.P039

U.S.PATENTS Remove

Examiner Initial*	Cite No	Patent Number	Kind Code[1]	Issue Date	Name of Patentee or Applicant of cited Document	Pages,Columns,Lines where Relevant Passages or Relevant Figures Appear
/R.P./	1	5644628	A	1997-07-01	Schwarzer et al.	
/R.P./	2	5745116	A	1998-04-28	Pisutha-Arnond	
/R.P./	3	5943039	A	1999-08-24	Anderson et al.	
/R.P./	4	6037937	A	2000-03-14	Beaton et al.	
/R.P./	5	6310610	B1	2001-10-30	Beaton et al.	
/R.P./	6	6618063	B1	2003-09-09	Kurtenbach	

If you wish to add additional U.S. Patent citation information please click the Add button. Add

U.S.PATENT APPLICATION PUBLICATIONS Remove

Examiner Initial*	Cite No	Publication Number	Kind Code[1]	Publication Date	Name of Patentee or Applicant of cited Document	Pages,Columns,Lines where Relevant Passages or Relevant Figures Appear

INFORMATION DISCLOSURE STATEMENT BY APPLICANT (Not for submission under 37 CFR 1.99)		
	Application Number	13310755
	Filing Date	2011-12-04
	First Named Inventor	Magnus Goertz
	Art Unit	2171
	Examiner Name	Ryan F. Pitaro
	Attorney Docket Number	NEONODE.P039

/R.P./	1	20020063696	A1	2002-05-30	Kubo et al.	
/R.P./	2	20020109677	A1	2002-08-15	Taylor	

If you wish to add additional U.S. Published Application citation information please click the Add button. Add

FOREIGN PATENT DOCUMENTS Remove

Examiner Initial*	Cite No	Foreign Document Number[3]	Country Code[2] i	Kind Code[4]	Publication Date	Name of Patentee or Applicant of cited Document	Pages,Columns,Lines where Relevant Passages or Relevant Figures Appear	T[5]
	1							☐

If you wish to add additional Foreign Patent Document citation information please click the Add button Add

NON-PATENT LITERATURE DOCUMENTS Remove

Examiner Initials*	Cite No	Include name of the author (in CAPITAL LETTERS), title of the article (when appropriate), title of the item (book, magazine, journal, serial, symposium, catalog, etc), date, pages(s), volume-issue number(s), publisher, city and/or country where published.	T[5]
/R.P./	1	Harrison, B. L., Fishkin, K. P., Gujar. A., Mochon, C. and Want, R., Squeeze Me, Hold Me, Tilt Me! An Exploration of Manipulative User Interfaces, Proceeding of the CHI '98 Conference on Human Factors in Computing Systems, ACM, Los Angeles, CA, April 18-23, 1998, pages 17-24.	☐
/R.P./	2	Kurtenbach, G. P., Sellen, A. J. and Buxton, W. A. S., An Empirical Evaluation of Some Articulatory and Cognitive Aspects of Marking Menus, Human-Computer Interaction, Volume 8, Issue 1, L. Erlbaum Associates Inc., Hillsdale, NJ, March 1993, Pages 1-23.	☐
/R.P./	3	MacKenzie, I. S. and Soukoreff, R. W., Text Entry for Mobile Computing: Models and Methods, Theory and Practice, Human-Computer Interaction, L. Erlbaum Associates Inc. Hillsdale, NJ, 2002, Volume 17, Pages 147-198.	☐
/R.P./	4	Mynatt, E. D., Igarashi, T., Edwards, W. K. and LaMarca, A., Flatland: New Dimensions in Office Whiteboards, Proceeding of the CHI '99 Conference on Human Factors in Computing Systems, ACM, New York, NY, May 15-20, 1999, pages 346-353.	☐

INFORMATION DISCLOSURE STATEMENT BY APPLICANT (Not for submission under 37 CFR 1.99)		
	Application Number	13310755
	Filing Date	2011-12-04
	First Named Inventor	Magnus Goertz
	Art Unit	2171
	Examiner Name	Ryan F. Pitaro
	Attorney Docket Number	NEONODE.P039

/R.P./	5	Bier, E. A., Fishkin, K., Pier, K. and Stone, M. C., A Taxonomy Of See-Through Tools: The Video, Proceeding of the CHI '95 Mosaic of Creativity, ACM, New York, NY, May 7-11, 1995, pages 411-412.	☐
/R.P./	6	Bier, E. A., Stone, M. C., Fishkin, K., Buxton, W. and Baudel, T., A Taxonomy Of See-Through Tools, Conference on Human Factors in Computing Systems, CHI '94, Boston, MA, ACM, New York, NY, April 24-28, 1994, pages 358-364.	☐
/R.P./	7	Damm, C. H., Hansen, K. M. and Thomsen, M., Tool Support for Cooperative Object-Oriented Design: Gesture Based Modeling on an Electronic Whiteboard, Proceeding of the CHI '00 Conference on Human Factors in Computing Systems, ACM, New York, NY, April 1-6, 2000, pages 518-525.	☐
/R.P./	8	Jermyn, I., Mayer, A., Monrose, F., Reiter, M. K. and Rubin, A. D., The Design And Analysis Of Graphical Passwords, Proceedings of the 8th USENIX Security Symposium, Washington, D.C., USA, August 23–26, 1999.	☐
/R.P./	9	Kenwood KVT-911DVD Instruction Manual, 2001, Japan.	☐
/R.P./	10	Kurtenbach, G. and Buxton, W., GORDON KURTENBACH AND WILLIAM BUXTON, The Limits Of Expert Performance Using Hierarchic Marking Menus, Proceedings from INTERCHI 93 - Conference on Human Factors in Computing Systems, ACM, New York, NY, April 24 - 29, 1993, pages 482-487.	☐
/R.P./	11	Pirhonen, A., Brewster, S. and Holguin, C., Gestural and Audio Metaphors as a Means of Control for Mobile Devices, Proceedings of the SIGCHI Conference on Human Factors in Computing Systems: Changing our World, Changing Ourselves, ACM New York, NY, pages 291-298.	☐

If you wish to add additional non-patent literature document citation information please click the Add button **Add**

EXAMINER SIGNATURE

Examiner Signature	/Ryan Pitaro/	Date Considered	09/17/2012

*EXAMINER: Initial if reference considered, whether or not citation is in conformance with MPEP 609. Draw line through a citation if not in conformance and not considered. Include copy of this form with next communication to applicant.

[1] See Kind Codes of USPTO Patent Documents at www.USPTO.GOV or MPEP 901.04. [2] Enter office that issued the document, by the two-letter code (WIPO Standard ST.3). [3] For Japanese patent documents, the indication of the year of the reign of the Emperor must precede the serial number of the patent document. [4] Kind of document by the appropriate symbols as indicated on the document under WIPO Standard ST.16 if possible. [5] Applicant is to place a check mark here if English language translation is attached.

INFORMATION DISCLOSURE STATEMENT BY APPLICANT (Not for submission under 37 CFR 1.99)		
	Application Number	13310755
	Filing Date	2011-12-04
	First Named Inventor	Magnus Goertz
	Art Unit	2171
	Examiner Name	Ryan F. Pitaro
	Attorney Docket Number	NEONODE.P039

CERTIFICATION STATEMENT

Please see 37 CFR 1.97 and 1.98 to make the appropriate selection(s):

☐ That each item of information contained in the information disclosure statement was first cited in any communication from a foreign patent office in a counterpart foreign application not more than three months prior to the filing of the information disclosure statement. See 37 CFR 1.97(e)(1).

OR

☐ That no item of information contained in the information disclosure statement was cited in a communication from a foreign patent office in a counterpart foreign application, and, to the knowledge of the person signing the certification after making reasonable inquiry, no item of information contained in the information disclosure statement was known to any individual designated in 37 CFR 1.56(c) more than three months prior to the filing of the information disclosure statement. See 37 CFR 1.97(e)(2).

☐ See attached certification statement.

☒ The fee set forth in 37 CFR 1.17 (p) has been submitted herewith.

☒ A certification statement is not submitted herewith.

SIGNATURE

A signature of the applicant or representative is required in accordance with CFR 1.33, 10.18. Please see CFR 1.4(d) for the form of the signature.

Signature	/Marc A. Berger/	Date (YYYY-MM-DD)	2012-08-17
Name/Print	Marc A. Berger	Registration Number	44029

This collection of information is required by 37 CFR 1.97 and 1.98. The information is required to obtain or retain a benefit by the public which is to file (and by the USPTO to process) an application. Confidentiality is governed by 35 U.S.C. 122 and 37 CFR 1.14. This collection is estimated to take 1 hour to complete, including gathering, preparing and submitting the completed application form to the USPTO. Time will vary depending upon the individual case. Any comments on the amount of time you require to complete this form and/or suggestions for reducing this burden, should be sent to the Chief Information Officer, U.S. Patent and Trademark Office, U.S. Department of Commerce, P.O. Box 1450, Alexandria, VA 22313-1450. DO NOT SEND FEES OR COMPLETED FORMS TO THIS ADDRESS. **SEND TO: Commissioner for Patents, P.O. Box 1450, Alexandria, VA 22313-1450.**

Privacy Act Statement

The Privacy Act of 1974 (P.L. 93-579) requires that you be given certain information in connection with your submission of the attached form related to a patent application or patent. Accordingly, pursuant to the requirements of the Act, please be advised that: (1) the general authority for the collection of this information is 35 U.S.C. 2(b)(2); (2) furnishing of the information solicited is voluntary; and (3) the principal purpose for which the information is used by the U.S. Patent and Trademark Office is to process and/or examine your submission related to a patent application or patent. If you do not furnish the requested information, the U.S. Patent and Trademark Office may not be able to process and/or examine your submission, which may result in termination of proceedings or abandonment of the application or expiration of the patent.

The information provided by you in this form will be subject to the following routine uses:

1. The information on this form will be treated confidentially to the extent allowed under the Freedom of Information Act (5 U.S.C. 552) and the Privacy Act (5 U.S.C. 552a). Records from this system of records may be disclosed to the Department of Justice to determine whether the Freedom of Information Act requires disclosure of these record s.

2. A record from this system of records may be disclosed, as a routine use, in the course of presenting evidence to a court, magistrate, or administrative tribunal, including disclosures to opposing counsel in the course of settlement negotiations.

3. A record in this system of records may be disclosed, as a routine use, to a Member of Congress submitting a request involving an individual, to whom the record pertains, when the individual has requested assistance from the Member with respect to the subject matter of the record.

4. A record in this system of records may be disclosed, as a routine use, to a contractor of the Agency having need for the information in order to perform a contract. Recipients of information shall be required to comply with the requirements of the Privacy Act of 1974, as amended, pursuant to 5 U.S.C. 552a(m).

5. A record related to an International Application filed under the Patent Cooperation Treaty in this system of records may be disclosed, as a routine use, to the International Bureau of the World Intellectual Property Organization, pursuant to the Patent Cooperation Treaty.

6. A record in this system of records may be disclosed, as a routine use, to another federal agency for purposes of National Security review (35 U.S.C. 181) and for review pursuant to the Atomic Energy Act (42 U.S.C. 218(c)).

7. A record from this system of records may be disclosed, as a routine use, to the Administrator, General Services, or his/her designee, during an inspection of records conducted by GSA as part of that agency's responsibility to recommend improvements in records management practices and programs, under authority of 44 U.S.C. 2904 and 2906. Such disclosure shall be made in accordance with the GSA regulations governing inspection of records for this purpose, and any other relevant (i.e., GSA or Commerce) directive. Such disclosure shall not be used to make determinations about individuals.

8. A record from this system of records may be disclosed, as a routine use, to the public after either publication of the application pursuant to 35 U.S.C. 122(b) or issuance of a patent pursuant to 35 U.S.C. 151. Further, a record may be disclosed, subject to the limitations of 37 CFR 1.14, as a routine use, to the public if the record was filed in an application which became abandoned or in which the proceedings were terminated and which application is referenced by either a published application, an application open to public inspections or an issued patent.

9. A record from this system of records may be disclosed, as a routine use, to a Federal, State, or local law enforcement agency, if the USPTO becomes aware of a violation or potential violation of law or regulation.

PTO/SB/08a (01-10)
Approved for use through 07/31/2012. OMB 0651-0031
U.S. Patent and Trademark Office; U.S. DEPARTMENT OF COMMERCE

Under the Paperwork Reduction Act of 1995, no persons are required to respond to a collection of information unless it contains a valid OMB control number.

INFORMATION DISCLOSURE STATEMENT BY APPLICANT
(Not for submission under 37 CFR 1.99)

Application Number	13310755
Filing Date	2011-12-04
First Named Inventor	Magnus Goertz
Art Unit	2171
Examiner Name	Ryan F. Pitaro
Attorney Docket Number	NEONODE.P039

U.S.PATENTS Remove

Examiner Initial*	Cite No	Patent Number	Kind Code[1]	Issue Date	Name of Patentee or Applicant of cited Document	Pages,Columns,Lines where Relevant Passages or Relevant Figures Appear
/R.P./	1	5463725	A	1995-10-31	Henckel et al.	
/R.P./	2	5748185	A	1998-05-05	Stephan et al.	
/R.P./	3	5889236	A	1999-03-30	Gillespie et al.	
/R.P./	4	5943044	A	1999-08-24	Martinelli et al.	
/R.P./	5	6340979	B1	2002-01-22	Beaton et al.	
/R.P./	6	6356287	B1	2002-03-12	Ruberry et al.	
/R.P./	7	6529920	B1	2003-03-04	Arons et al.	
/R.P./	8	6690365	B2	2004-02-10	Hinckley et al.	

INFORMATION DISCLOSURE STATEMENT BY APPLICANT (Not for submission under 37 CFR 1.99)		
	Application Number	13310755
	Filing Date	2011-12-04
	First Named Inventor	Magnus Goertz
	Art Unit	2171
	Examiner Name	Ryan F. Pitaro
	Attorney Docket Number	NEONODE.P039

/R.P./	9	6690387	B2	2004-02-10	Zimmerman et al.	
/R.P./	10	6707449	B2	2004-03-16	Hinckley et al.	
/R.P./	11	6788292	B1	2004-09-07	Nako et al.	
/R.P./	12	6874683	B1	2005-04-05	Keronen et al.	
/R.P./	13	7441196	B2	2008-10-21	Gottfurcht et al.	
/R.P./	14	8120625	B2	2012-02-21	Hinckley	

If you wish to add additional U.S. Patent citation information please click the Add button. Add

U.S.PATENT APPLICATION PUBLICATIONS Remove

Examiner Initial*	Cite No	Publication Number	Kind Code[1]	Publication Date	Name of Patentee or Applicant of cited Document	Pages,Columns,Lines where Relevant Passages or Relevant Figures Appear
/R.P./	1	20010030641	A1	2001-10-18	Suzuki	
/R.P./	2	20010043189	A1	2001-11-22	Brisebois et al.	
/R.P./	3	20030060699	A1	2002-05-23	D'Agostini	

INFORMATION DISCLOSURE STATEMENT BY APPLICANT (Not for submission under 37 CFR 1.99)		
	Application Number	13310755
	Filing Date	2011-12-04
	First Named Inventor	Magnus Goertz
	Art Unit	2171
	Examiner Name	Ryan F. Pitaro
	Attorney Docket Number	NEONODE.P039

/R.P./	4	20020075244	A1	2002-06-20	Tani et al.	
/R.P./	5	20030043207	A1	2003-03-06	Duarte	
/R.P./	6	20030076306	A1	2003-04-24	Zadesky et al.	
/R.P./	7	20030122787	A1	2003-07-03	Zimmerman et al.	
/R.P./	8	20040125143	A1	2004-07-01	Deaton et al.	

If you wish to add additional U.S. Published Application citation information please click the Add button. Add

FOREIGN PATENT DOCUMENTS Remove

Examiner Initial*	Cite No	Foreign Document Number[3]	Country Code[2] ¡	Kind Code[4]	Publication Date	Name of Patentee or Applicant of cited Document	Pages,Columns,Lines where Relevant Passages or Relevant Figures Appear	T[5]
	1							☐

If you wish to add additional Foreign Patent Document citation information please click the Add button Add

NON-PATENT LITERATURE DOCUMENTS Remove

Examiner Initials*	Cite No	Include name of the author (in CAPITAL LETTERS), title of the article (when appropriate), title of the item (book, magazine, journal, serial, symposium, catalog, etc), date, pages(s), volume-issue number(s), publisher, city and/or country where published.	T[5]
/R.P./	1	SwitchHack 1.62",January 17, 2001, downloaded from http://web.archive.org/web/200101170650/http://www.deskfree.com/switchhack.html	☐

INFORMATION DISCLOSURE STATEMENT BY APPLICANT (Not for submission under 37 CFR 1.99)		
	Application Number	13310755
	Filing Date	2011-12-04
	First Named Inventor	Magnus Goertz
	Art Unit	2171
	Examiner Name	Ryan F. Pitaro
	Attorney Docket Number	NEONODE.P039

/R.P./	2	swipe_readme.txt, May 8, 2001, downloaded in swipe.zip from http://web.archive.org/web/20010508013439/http://www.samsungshop.co.yu/palm/swipe.zip	☐
/R.P./	3	"Desk Accessories",October 18, 2000, downoaded from http://web.archive.org/web/20001018025151/http://www.doublebang.com/resources/da.html	☐
/R.P./	4	"Launch 'em 1.53", December 11, 1998, downloaded from http://www.5star-shareware.com/PDA/Palm/Utilities/launchem.html	☐
/R.P./	5	Pogue, David, Palm Pilot: The Ultimate Guide, 2nd Edition, 1999, O'Reilly and Associates, Inc., pages 19, 27-36, 38-47, 80, 113, 494, 507, 509, 519-520.	☐

If you wish to add additional non-patent literature document citation information please click the Add button Add

EXAMINER SIGNATURE

Examiner Signature	/Ryan Pitaro/	Date Considered	09/17/2012

*EXAMINER: Initial if reference considered, whether or not citation is in conformance with MPEP 609. Draw line through a citation if not in conformance and not considered. Include copy of this form with next communication to applicant.

[1] See Kind Codes of USPTO Patent Documents at www.USPTO.GOV or MPEP 901.04. [2] Enter office that issued the document, by the two-letter code (WIPO Standard ST.3). [3] For Japanese patent documents, the indication of the year of the reign of the Emperor must precede the serial number of the patent document. [4] Kind of document by the appropriate symbols as indicated on the document under WIPO Standard ST.16 if possible. [5] Applicant is to place a check mark here if English language translation is attached.

INFORMATION DISCLOSURE STATEMENT BY APPLICANT (Not for submission under 37 CFR 1.99)		
	Application Number	13310755
	Filing Date	2011-12-04
	First Named Inventor	Magnus Goertz
	Art Unit	2171
	Examiner Name	Ryan F. Pitaro
	Attorney Docket Number	NEONODE.P039

CERTIFICATION STATEMENT

Please see 37 CFR 1.97 and 1.98 to make the appropriate selection(s):

☐ That each item of information contained in the information disclosure statement was first cited in any communication from a foreign patent office in a counterpart foreign application not more than three months prior to the filing of the information disclosure statement. See 37 CFR 1.97(e)(1).

OR

☐ That no item of information contained in the information disclosure statement was cited in a communication from a foreign patent office in a counterpart foreign application, and, to the knowledge of the person signing the certification after making reasonable inquiry, no item of information contained in the information disclosure statement was known to any individual designated in 37 CFR 1.56(c) more than three months prior to the filing of the information disclosure statement. See 37 CFR 1.97(e)(2).

☐ See attached certification statement.

☒ The fee set forth in 37 CFR 1.17 (p) has been submitted herewith.

☒ A certification statement is not submitted herewith.

SIGNATURE

A signature of the applicant or representative is required in accordance with CFR 1.33, 10.18. Please see CFR 1.4(d) for the form of the signature.

Signature	/Marc A. Berger/	Date (YYYY-MM-DD)	2012-06-12
Name/Print	Marc A. Berger	Registration Number	44029

This collection of information is required by 37 CFR 1.97 and 1.98. The information is required to obtain or retain a benefit by the public which is to file (and by the USPTO to process) an application. Confidentiality is governed by 35 U.S.C. 122 and 37 CFR 1.14. This collection is estimated to take 1 hour to complete, including gathering, preparing and submitting the completed application form to the USPTO. Time will vary depending upon the individual case. Any comments on the amount of time you require to complete this form and/or suggestions for reducing this burden, should be sent to the Chief Information Officer, U.S. Patent and Trademark Office, U.S. Department of Commerce, P.O. Box 1450, Alexandria, VA 22313-1450. DO NOT SEND FEES OR COMPLETED FORMS TO THIS ADDRESS. **SEND TO: Commissioner for Patents, P.O. Box 1450, Alexandria, VA 22313-1450.**

Privacy Act Statement

The Privacy Act of 1974 (P.L. 93-579) requires that you be given certain information in connection with your submission of the attached form related to a patent application or patent. Accordingly, pursuant to the requirements of the Act, please be advised that: (1) the general authority for the collection of this information is 35 U.S.C. 2(b)(2); (2) furnishing of the information solicited is voluntary; and (3) the principal purpose for which the information is used by the U.S. Patent and Trademark Office is to process and/or examine your submission related to a patent application or patent. If you do not furnish the requested information, the U.S. Patent and Trademark Office may not be able to process and/or examine your submission, which may result in termination of proceedings or abandonment of the application or expiration of the patent.

The information provided by you in this form will be subject to the following routine uses:

1. The information on this form will be treated confidentially to the extent allowed under the Freedom of Information Act (5 U.S.C. 552) and the Privacy Act (5 U.S.C. 552a). Records from this system of records may be disclosed to the Department of Justice to determine whether the Freedom of Information Act requires disclosure of these record s.

2. A record from this system of records may be disclosed, as a routine use, in the course of presenting evidence to a court, magistrate, or administrative tribunal, including disclosures to opposing counsel in the course of settlement negotiations.

3. A record in this system of records may be disclosed, as a routine use, to a Member of Congress submitting a request involving an individual, to whom the record pertains, when the individual has requested assistance from the Member with respect to the subject matter of the record.

4. A record in this system of records may be disclosed, as a routine use, to a contractor of the Agency having need for the information in order to perform a contract. Recipients of information shall be required to comply with the requirements of the Privacy Act of 1974, as amended, pursuant to 5 U.S.C. 552a(m).

5. A record related to an International Application filed under the Patent Cooperation Treaty in this system of records may be disclosed, as a routine use, to the International Bureau of the World Intellectual Property Organization, pursuant to the Patent Cooperation Treaty.

6. A record in this system of records may be disclosed, as a routine use, to another federal agency for purposes of National Security review (35 U.S.C. 181) and for review pursuant to the Atomic Energy Act (42 U.S.C. 218(c)).

7. A record from this system of records may be disclosed, as a routine use, to the Administrator, General Services, or his/her designee, during an inspection of records conducted by GSA as part of that agency's responsibility to recommend improvements in records management practices and programs, under authority of 44 U.S.C. 2904 and 2906. Such disclosure shall be made in accordance with the GSA regulations governing inspection of records for this purpose, and any other relevant (i.e., GSA or Commerce) directive. Such disclosure shall not be used to make determinations about individuals.

8. A record from this system of records may be disclosed, as a routine use, to the public after either publication of the application pursuant to 35 U.S.C. 122(b) or issuance of a patent pursuant to 35 U.S.C. 151. Further, a record may be disclosed, subject to the limitations of 37 CFR 1.14, as a routine use, to the public if the record was filed in an application which became abandoned or in which the proceedings were terminated and which application is referenced by either a published application, an application open to public inspections or an issued patent.

9. A record from this system of records may be disclosed, as a routine use, to a Federal, State, or local law enforcement agency, if the USPTO becomes aware of a violation or potential violation of law or regulation.

PTO/SB/08a (01-10)
Approved for use through 07/31/2012. OMB 0651-0031
U.S. Patent and Trademark Office; U.S. DEPARTMENT OF COMMERCE

Under the Paperwork Reduction Act of 1995, no persons are required to respond to a collection of information unless it contains a valid OMB control number.

INFORMATION DISCLOSURE STATEMENT BY APPLICANT
(Not for submission under 37 CFR 1.99)

Application Number	13310755
Filing Date	2011-12-04
First Named Inventor	Magnus Goertz
Art Unit	2171
Examiner Name	Ryan F. Pitaro
Attorney Docket Number	NEONODE.P039

U.S.PATENTS Remove

Examiner Initial*	Cite No	Patent Number	Kind Code[1]	Issue Date	Name of Patentee or Applicant of cited Document	Pages,Columns,Lines where Relevant Passages or Relevant Figures Appear
	1	5644628	A	1997-07-01	Schwarzer et al.	
	2	5745116	A	1998-04-28	Pisutha-Arnond	
	3	5943039	A	1999-08-24	Anderson et al.	
	4	6037937	A	2000-03-14	Beaton et al.	
	5	6310610	B1	2001-10-30	Beaton et al.	
	6	6618063	B1	2003-09-09	Kurtenbach	

If you wish to add additional U.S. Patent citation information please click the Add button. Add

U.S.PATENT APPLICATION PUBLICATIONS Remove

Examiner Initial*	Cite No	Publication Number	Kind Code[1]	Publication Date	Name of Patentee or Applicant of cited Document	Pages,Columns,Lines where Relevant Passages or Relevant Figures Appear

INFORMATION DISCLOSURE STATEMENT BY APPLICANT (Not for submission under 37 CFR 1.99)		
	Application Number	13310755
	Filing Date	2011-12-04
	First Named Inventor	Magnus Goertz
	Art Unit	2171
	Examiner Name	Ryan F. Pitaro
	Attorney Docket Number	NEONODE.P039

	1	20020063696	A1	2002-05-30	Kubo et al.	
	2	20020109677	A1	2002-08-15	Taylor	

If you wish to add additional U.S. Published Application citation information please click the Add button. Add

FOREIGN PATENT DOCUMENTS Remove

Examiner Initial*	Cite No	Foreign Document Number[3]	Country Code[2] i	Kind Code[4]	Publication Date	Name of Patentee or Applicant of cited Document	Pages,Columns,Lines where Relevant Passages or Relevant Figures Appear	T[5]
	1							☐

If you wish to add additional Foreign Patent Document citation information please click the Add button Add

NON-PATENT LITERATURE DOCUMENTS Remove

Examiner Initials*	Cite No	Include name of the author (in CAPITAL LETTERS), title of the article (when appropriate), title of the item (book, magazine, journal, serial, symposium, catalog, etc), date, pages(s), volume-issue number(s), publisher, city and/or country where published.	T[5]
	1	Harrison, B. L., Fishkin, K. P., Gujar. A., Mochon, C. and Want, R., Squeeze Me, Hold Me, Tilt Me! An Exploration of Manipulative User Interfaces, Proceeding of the CHI '98 Conference on Human Factors in Computing Systems, ACM, Los Angeles, CA, April 18-23, 1998, pages 17-24.	☐
	2	Kurtenbach, G. P., Sellen, A. J. and Buxton, W. A. S., An Empirical Evaluation of Some Articulatory and Cognitive Aspects of Marking Menus, Human-Computer Interaction, Volume 8, Issue 1, L. Erlbaum Associates Inc., Hillsdale, NJ, March 1993, Pages 1-23.	☐
	3	MacKenzie, I. S. and Soukoreff, R. W., Text Entry for Mobile Computing: Models and Methods, Theory and Practice, Human-Computer Interaction, L. Erlbaum Associates Inc. Hillsdale, NJ, 2002, Volume 17, Pages 147-198.	☐
	4	Mynatt, E. D., Igarashi, T., Edwards, W. K. and LaMarca, A., Flatland: New Dimensions in Office Whiteboards, Proceeding of the CHI '99 Conference on Human Factors in Computing Systems, ACM, New York, NY, May 15-20, 1999, pages 346-353.	☐

INFORMATION DISCLOSURE STATEMENT BY APPLICANT (Not for submission under 37 CFR 1.99)		
	Application Number	13310755
	Filing Date	2011-12-04
	First Named Inventor	Magnus Goertz
	Art Unit	2171
	Examiner Name	Ryan F. Pitaro
	Attorney Docket Number	NEONODE.P039

	5	Bier, E. A., Fishkin, K., Pier, K. and Stone, M. C., A Taxonomy Of See-Through Tools: The Video, Proceeding of the CHI '95 Mosaic of Creativity, ACM, New York, NY, May 7-11, 1995, pages 411-412.	☐
	6	Bier, E. A., Stone, M. C., Fishkin, K., Buxton, W. and Baudel, T., A Taxonomy Of See-Through Tools, Conference on Human Factors in Computing Systems, CHI '94, Boston, MA, ACM, New York, NY, April 24-28, 1994, pages 358-364.	☐
	7	Damm, C. H., Hansen, K. M. and Thomsen, M., Tool Support for Cooperative Object-Oriented Design: Gesture Based Modeling on an Electronic Whiteboard, Proceeding of the CHI '00 Conference on Human Factors in Computing Systems, ACM, New York, NY, April 1-6, 2000, pages 518-525.	☐
	8	Jermyn, I., Mayer, A., Monrose, F., Reiter, M. K. and Rubin, A. D., The Design And Analysis Of Graphical Passwords, Proceedings of the 8th USENIX Security Symposium, Washington, D.C., USA, August 23–26, 1999.	☐
	9	Kenwood KVT-911DVD Instruction Manual, 2001, Japan.	☐
	10	Kurtenbach, G. and Buxton, W., GORDON KURTENBACH AND WILLIAM BUXTON, The Limits Of Expert Performance Using Hierarchic Marking Menus, Proceedings from INTERCHI 93 - Conference on Human Factors in Computing Systems, ACM, New York, NY, April 24 - 29, 1993, pages 482-487.	☐
	11	Pirhonen, A., Brewster, S. and Holguin, C., Gestural and Audio Metaphors as a Means of Control for Mobile Devices, Proceedings of the SIGCHI Conference on Human Factors in Computing Systems: Changing our World, Changing Ourselves, ACM New York, NY, pages 291-298.	☐

If you wish to add additional non-patent literature document citation information please click the Add button Add

EXAMINER SIGNATURE

Examiner Signature		Date Considered	

*EXAMINER: Initial if reference considered, whether or not citation is in conformance with MPEP 609. Draw line through a citation if not in conformance and not considered. Include copy of this form with next communication to applicant.

[1] See Kind Codes of USPTO Patent Documents at www.USPTO.GOV or MPEP 901.04. [2] Enter office that issued the document, by the two-letter code (WIPO Standard ST.3). [3] For Japanese patent documents, the indication of the year of the reign of the Emperor must precede the serial number of the patent document. [4] Kind of document by the appropriate symbols as indicated on the document under WIPO Standard ST.16 if possible. [5] Applicant is to place a check mark here if English language translation is attached.

INFORMATION DISCLOSURE STATEMENT BY APPLICANT (Not for submission under 37 CFR 1.99)		
	Application Number	13310755
	Filing Date	2011-12-04
	First Named Inventor	Magnus Goertz
	Art Unit	2171
	Examiner Name	Ryan F. Pitaro
	Attorney Docket Number	NEONODE.P039

CERTIFICATION STATEMENT

Please see 37 CFR 1.97 and 1.98 to make the appropriate selection(s):

☐ That each item of information contained in the information disclosure statement was first cited in any communication from a foreign patent office in a counterpart foreign application not more than three months prior to the filing of the information disclosure statement. See 37 CFR 1.97(e)(1).

OR

☐ That no item of information contained in the information disclosure statement was cited in a communication from a foreign patent office in a counterpart foreign application, and, to the knowledge of the person signing the certification after making reasonable inquiry, no item of information contained in the information disclosure statement was known to any individual designated in 37 CFR 1.56(c) more than three months prior to the filing of the information disclosure statement. See 37 CFR 1.97(e)(2).

☐ See attached certification statement.

☒ The fee set forth in 37 CFR 1.17 (p) has been submitted herewith.

☒ A certification statement is not submitted herewith.

SIGNATURE

A signature of the applicant or representative is required in accordance with CFR 1.33, 10.18. Please see CFR 1.4(d) for the form of the signature.

Signature	/Marc A. Berger/	Date (YYYY-MM-DD)	2012-08-17
Name/Print	Marc A. Berger	Registration Number	44029

This collection of information is required by 37 CFR 1.97 and 1.98. The information is required to obtain or retain a benefit by the public which is to file (and by the USPTO to process) an application. Confidentiality is governed by 35 U.S.C. 122 and 37 CFR 1.14. This collection is estimated to take 1 hour to complete, including gathering, preparing and submitting the completed application form to the USPTO. Time will vary depending upon the individual case. Any comments on the amount of time you require to complete this form and/or suggestions for reducing this burden, should be sent to the Chief Information Officer, U.S. Patent and Trademark Office, U.S. Department of Commerce, P.O. Box 1450, Alexandria, VA 22313-1450. DO NOT SEND FEES OR COMPLETED FORMS TO THIS ADDRESS. **SEND TO: Commissioner for Patents, P.O. Box 1450, Alexandria, VA 22313-1450.**

Privacy Act Statement

The Privacy Act of 1974 (P.L. 93-579) requires that you be given certain information in connection with your submission of the attached form related to a patent application or patent. Accordingly, pursuant to the requirements of the Act, please be advised that: (1) the general authority for the collection of this information is 35 U.S.C. 2(b)(2); (2) furnishing of the information solicited is voluntary; and (3) the principal purpose for which the information is used by the U.S. Patent and Trademark Office is to process and/or examine your submission related to a patent application or patent. If you do not furnish the requested information, the U.S. Patent and Trademark Office may not be able to process and/or examine your submission, which may result in termination of proceedings or abandonment of the application or expiration of the patent.

The information provided by you in this form will be subject to the following routine uses:

1. The information on this form will be treated confidentially to the extent allowed under the Freedom of Information Act (5 U.S.C. 552) and the Privacy Act (5 U.S.C. 552a). Records from this system of records may be disclosed to the Department of Justice to determine whether the Freedom of Information Act requires disclosure of these record s.

2. A record from this system of records may be disclosed, as a routine use, in the course of presenting evidence to a court, magistrate, or administrative tribunal, including disclosures to opposing counsel in the course of settlement negotiations.

3. A record in this system of records may be disclosed, as a routine use, to a Member of Congress submitting a request involving an individual, to whom the record pertains, when the individual has requested assistance from the Member with respect to the subject matter of the record.

4. A record in this system of records may be disclosed, as a routine use, to a contractor of the Agency having need for the information in order to perform a contract. Recipients of information shall be required to comply with the requirements of the Privacy Act of 1974, as amended, pursuant to 5 U.S.C. 552a(m).

5. A record related to an International Application filed under the Patent Cooperation Treaty in this system of records may be disclosed, as a routine use, to the International Bureau of the World Intellectual Property Organization, pursuant to the Patent Cooperation Treaty.

6. A record in this system of records may be disclosed, as a routine use, to another federal agency for purposes of National Security review (35 U.S.C. 181) and for review pursuant to the Atomic Energy Act (42 U.S.C. 218(c)).

7. A record from this system of records may be disclosed, as a routine use, to the Administrator, General Services, or his/her designee, during an inspection of records conducted by GSA as part of that agency's responsibility to recommend improvements in records management practices and programs, under authority of 44 U.S.C. 2904 and 2906. Such disclosure shall be made in accordance with the GSA regulations governing inspection of records for this purpose, and any other relevant (i.e., GSA or Commerce) directive. Such disclosure shall not be used to make determinations about individuals.

8. A record from this system of records may be disclosed, as a routine use, to the public after either publication of the application pursuant to 35 U.S.C. 122(b) or issuance of a patent pursuant to 35 U.S.C. 151. Further, a record may be disclosed, subject to the limitations of 37 CFR 1.14, as a routine use, to the public if the record was filed in an application which became abandoned or in which the proceedings were terminated and which application is referenced by either a published application, an application open to public inspections or an issued patent.

9. A record from this system of records may be disclosed, as a routine use, to a Federal, State, or local law enforcement agency, if the USPTO becomes aware of a violation or potential violation of law or regulation.

Electronic Patent Application Fee Transmittal	
Application Number:	13310755
Filing Date:	04-Dec-2011
Title of Invention:	USER INTERFACE
First Named Inventor/Applicant Name:	Magnus Goertz
Filer:	Marc Aron Berger
Attorney Docket Number:	NEONODE.P039
Filed as Large Entity	

Utility under 35 USC 111(a) Filing Fees

Description	Fee Code	Quantity	Amount	Sub-Total in USD($)
Basic Filing:				
Pages:				
Claims:				
Miscellaneous-Filing:				
Petition:				
Patent-Appeals-and-Interference:				
Post-Allowance-and-Post-Issuance:				
Extension-of-Time:				

Description	Fee Code	Quantity	Amount	Sub-Total in USD($)
Miscellaneous:				
Submission- Information Disclosure Stmt	1806	1	180	180
		Total in USD ($)		**180**

Electronic Acknowledgement Receipt

EFS ID:	13519876
Application Number:	13310755
International Application Number:	
Confirmation Number:	1066
Title of Invention:	USER INTERFACE
First Named Inventor/Applicant Name:	Magnus Goertz
Customer Number:	75660
Filer:	Marc Aron Berger
Filer Authorized By:	
Attorney Docket Number:	NEONODE.P039
Receipt Date:	17-AUG-2012
Filing Date:	04-DEC-2011
Time Stamp:	09:49:12
Application Type:	Utility under 35 USC 111(a)

Payment information:

Submitted with Payment	yes
Payment Type	Credit Card
Payment was successfully received in RAM	$180
RAM confirmation Number	7320
Deposit Account	
Authorized User	

File Listing:

Document Number	Document Description	File Name	File Size(Bytes)/ Message Digest	Multi Part /.zip	Pages (if appl.)

1	Information Disclosure Statement (IDS) Form (SB08)	NEONODE-P039_InformationDisclosureStatement_08-17-2012.pdf	614000 1339a34a42ca2c46474e7b6876cbefd24e608a31	no	5
Warnings:					
Information:					
2	Non Patent Literature	JERMYN.pdf	13049228 90b6af82786cf0ac67f1f07546afc98c90eb803d	no	15
Warnings:					
Information:					
3	Non Patent Literature	KURTENBACH-1.pdf	16689317 ca6cdfd7036c25c71d169d96d14ca7ac0ce2c7c1	no	24
Warnings:					
Information:					
4	Non Patent Literature	PIRHONEN.pdf	182365 30bc65f86c770f06f3ad5da168c27ac80d077ac9	no	8
Warnings:					
Information:					
5	Non Patent Literature	HARRISON.pdf	1764540 10e2aa55b1536a83322152d8275540c46d0eaed3	no	8
Warnings:					
Information:					
6	Non Patent Literature	MACKENZIE.pdf	416241 47baba84a933d756c39e286e1734ec254bafd75f	no	53
Warnings:					
Information:					
7	Non Patent Literature	MYNATT.pdf	1771964 f58ca3e2c859bf261903d496fb5edf5b5f615c11	no	8
Warnings:					
Information:					
8	Non Patent Literature	BIER-1.pdf	4204350 d287781c0413c529e60e8a2f77c91765a5713495	no	2
Warnings:					
Information:					
9	Non Patent Literature	BIER-2.pdf	14908143 8a434875d8bccb83d23e282616579d04c46d4060	no	7
Warnings:					
Information:					

10	Non Patent Literature	DAMM.pdf	15932109 ef9161847a562de1cda9096646540e8a8bc46d51	no	8
Warnings:					
Information:					
11	Non Patent Literature	KURTENBACH-2.pdf	10929364 bb486dc9f3ff2d921eea3ad9eef3cb49226ef87a	no	6
Warnings:					
Information:					
12	Non Patent Literature	KENWOOD-1.pdf	6725991 55829e4c4868879064b979848f9f5764de3e6fb7	no	68
Warnings:					
Information:					
13	Fee Worksheet (SB06)	fee-info.pdf	30276 72a3d87e4c846740d512a9694c8b21f20e09a77e	no	2
Warnings:					
Information:					
			Total Files Size (in bytes):	87217888	

This Acknowledgement Receipt evidences receipt on the noted date by the USPTO of the indicated documents, characterized by the applicant, and including page counts, where applicable. It serves as evidence of receipt similar to a Post Card, as described in MPEP 503.

<u>New Applications Under 35 U.S.C. 111</u>
If a new application is being filed and the application includes the necessary components for a filing date (see 37 CFR 1.53(b)-(d) and MPEP 506), a Filing Receipt (37 CFR 1.54) will be issued in due course and the date shown on this Acknowledgement Receipt will establish the filing date of the application.

<u>National Stage of an International Application under 35 U.S.C. 371</u>
If a timely submission to enter the national stage of an international application is compliant with the conditions of 35 U.S.C. 371 and other applicable requirements a Form PCT/DO/EO/903 indicating acceptance of the application as a national stage submission under 35 U.S.C. 371 will be issued in addition to the Filing Receipt, in due course.

<u>New International Application Filed with the USPTO as a Receiving Office</u>
If a new international application is being filed and the international application includes the necessary components for an international filing date (see PCT Article 11 and MPEP 1810), a Notification of the International Application Number and of the International Filing Date (Form PCT/RO/105) will be issued in due course, subject to prescriptions concerning national security, and the date shown on this Acknowledgement Receipt will establish the international filing date of the application.

PTO/SB/08a (01-10)
Approved for use through 07/31/2012. OMB 0651-0031
U.S. Patent and Trademark Office; U.S. DEPARTMENT OF COMMERCE
Under the Paperwork Reduction Act of 1995, no persons are required to respond to a collection of information unless it contains a valid OMB control number.

INFORMATION DISCLOSURE STATEMENT BY APPLICANT (**Not for submission under 37 CFR 1.99)**		
	Application Number	13310755
	Filing Date	2011-12-04
	First Named Inventor	Magnus Goertz
	Art Unit	2171
	Examiner Name	Ryan F. Pitaro
	Attorney Docket Number	NEONODE.P039

U.S.PATENTS						Remove
Examiner Initial*	Cite No	Patent Number	Kind Code[1]	Issue Date	Name of Patentee or Applicant of cited Document	Pages,Columns,Lines where Relevant Passages or Relevant Figures Appear
	1	8127141	B2	2012-02-28	Hypponen	
If you wish to add additional U.S. Patent citation information please click the Add button.						Add

U.S.PATENT APPLICATION PUBLICATIONS						Remove
Examiner Initial*	Cite No	Publication Number	Kind Code[1]	Publication Date	Name of Patentee or Applicant of cited Document	Pages,Columns,Lines where Relevant Passages or Relevant Figures Appear
	1					
If you wish to add additional U.S. Published Application citation information please click the Add button.						Add

FOREIGN PATENT DOCUMENTS							Remove	
Examiner Initial*	Cite No	Foreign Document Number[3]	Country Code[2] ¡	Kind Code[4]	Publication Date	Name of Patentee or Applicant of cited Document	Pages,Columns,Lines where Relevant Passages or Relevant Figures Appear	T[5]
	1							☐
If you wish to add additional Foreign Patent Document citation information please click the Add button							Add	

NON-PATENT LITERATURE DOCUMENTS			Remove
Examiner Initials*	Cite No	Include name of the author (in CAPITAL LETTERS), title of the article (when appropriate), title of the item (book, magazine, journal, serial, symposium, catalog, etc), date, pages(s), volume-issue number(s), publisher, city and/or country where published.	T[5]

INFORMATION DISCLOSURE STATEMENT BY APPLICANT (**Not for submission under 37 CFR 1.99)**		
	Application Number	13310755
	Filing Date	2011-12-04
	First Named Inventor	Magnus Goertz
	Art Unit	2171
	Examiner Name	Ryan F. Pitaro
	Attorney Docket Number	NEONODE.P039

	1	C. Plaisant and D. Wallace, "Touchscreen toggle design", CHI '92 Proceedings of the SIGCHI Conference on Human Factors in Computing Systems, May 3 - 7, 1992, Pages 667 – 668, ACM New York, NY, USA.	☐

If you wish to add additional non-patent literature document citation information please click the Add button Add

EXAMINER SIGNATURE

Examiner Signature		Date Considered	

*EXAMINER: Initial if reference considered, whether or not citation is in conformance with MPEP 609. Draw line through a citation if not in conformance and not considered. Include copy of this form with next communication to applicant.

[1] See Kind Codes of USPTO Patent Documents at www.USPTO.GOV or MPEP 901.04. [2] Enter office that issued the document, by the two-letter code (WIPO Standard ST.3). [3] For Japanese patent documents, the indication of the year of the reign of the Emperor must precede the serial number of the patent document. [4] Kind of document by the appropriate symbols as indicated on the document under WIPO Standard ST.16 if possible. [5] Applicant is to place a check mark here if English language translation is attached.

INFORMATION DISCLOSURE STATEMENT BY APPLICANT (Not for submission under 37 CFR 1.99)		
	Application Number	13310755
	Filing Date	2011-12-04
	First Named Inventor	Magnus Goertz
	Art Unit	2171
	Examiner Name	Ryan F. Pitaro
	Attorney Docket Number	NEONODE.P039

CERTIFICATION STATEMENT

Please see 37 CFR 1.97 and 1.98 to make the appropriate selection(s):

☐ That each item of information contained in the information disclosure statement was first cited in any communication from a foreign patent office in a counterpart foreign application not more than three months prior to the filing of the information disclosure statement. See 37 CFR 1.97(e)(1).

OR

☐ That no item of information contained in the information disclosure statement was cited in a communication from a foreign patent office in a counterpart foreign application, and, to the knowledge of the person signing the certification after making reasonable inquiry, no item of information contained in the information disclosure statement was known to any individual designated in 37 CFR 1.56(c) more than three months prior to the filing of the information disclosure statement. See 37 CFR 1.97(e)(2).

☐ See attached certification statement.

☒ The fee set forth in 37 CFR 1.17 (p) has been submitted herewith.

☒ A certification statement is not submitted herewith.

SIGNATURE

A signature of the applicant or representative is required in accordance with CFR 1.33, 10.18. Please see CFR 1.4(d) for the form of the signature.

Signature	/Marc A. Berger/	Date (YYYY-MM-DD)	2012-07-23
Name/Print	Marc A. Berger	Registration Number	44029

This collection of information is required by 37 CFR 1.97 and 1.98. The information is required to obtain or retain a benefit by the public which is to file (and by the USPTO to process) an application. Confidentiality is governed by 35 U.S.C. 122 and 37 CFR 1.14. This collection is estimated to take 1 hour to complete, including gathering, preparing and submitting the completed application form to the USPTO. Time will vary depending upon the individual case. Any comments on the amount of time you require to complete this form and/or suggestions for reducing this burden, should be sent to the Chief Information Officer, U.S. Patent and Trademark Office, U.S. Department of Commerce, P.O. Box 1450, Alexandria, VA 22313-1450. DO NOT SEND FEES OR COMPLETED FORMS TO THIS ADDRESS. **SEND TO: Commissioner for Patents, P.O. Box 1450, Alexandria, VA 22313-1450.**

Privacy Act Statement

The Privacy Act of 1974 (P.L. 93-579) requires that you be given certain information in connection with your submission of the attached form related to a patent application or patent. Accordingly, pursuant to the requirements of the Act, please be advised that: (1) the general authority for the collection of this information is 35 U.S.C. 2(b)(2); (2) furnishing of the information solicited is voluntary; and (3) the principal purpose for which the information is used by the U.S. Patent and Trademark Office is to process and/or examine your submission related to a patent application or patent. If you do not furnish the requested information, the U.S. Patent and Trademark Office may not be able to process and/or examine your submission, which may result in termination of proceedings or abandonment of the application or expiration of the patent.

The information provided by you in this form will be subject to the following routine uses:

1. The information on this form will be treated confidentially to the extent allowed under the Freedom of Information Act (5 U.S.C. 552) and the Privacy Act (5 U.S.C. 552a). Records from this system of records may be disclosed to the Department of Justice to determine whether the Freedom of Information Act requires disclosure of these record s.

2. A record from this system of records may be disclosed, as a routine use, in the course of presenting evidence to a court, magistrate, or administrative tribunal, including disclosures to opposing counsel in the course of settlement negotiations.

3. A record in this system of records may be disclosed, as a routine use, to a Member of Congress submitting a request involving an individual, to whom the record pertains, when the individual has requested assistance from the Member with respect to the subject matter of the record.

4. A record in this system of records may be disclosed, as a routine use, to a contractor of the Agency having need for the information in order to perform a contract. Recipients of information shall be required to comply with the requirements of the Privacy Act of 1974, as amended, pursuant to 5 U.S.C. 552a(m).

5. A record related to an International Application filed under the Patent Cooperation Treaty in this system of records may be disclosed, as a routine use, to the International Bureau of the World Intellectual Property Organization, pursuant to the Patent Cooperation Treaty.

6. A record in this system of records may be disclosed, as a routine use, to another federal agency for purposes of National Security review (35 U.S.C. 181) and for review pursuant to the Atomic Energy Act (42 U.S.C. 218(c)).

7. A record from this system of records may be disclosed, as a routine use, to the Administrator, General Services, or his/her designee, during an inspection of records conducted by GSA as part of that agency's responsibility to recommend improvements in records management practices and programs, under authority of 44 U.S.C. 2904 and 2906. Such disclosure shall be made in accordance with the GSA regulations governing inspection of records for this purpose, and any other relevant (i.e., GSA or Commerce) directive. Such disclosure shall not be used to make determinations about individuals.

8. A record from this system of records may be disclosed, as a routine use, to the public after either publication of the application pursuant to 35 U.S.C. 122(b) or issuance of a patent pursuant to 35 U.S.C. 151. Further, a record may be disclosed, subject to the limitations of 37 CFR 1.14, as a routine use, to the public if the record was filed in an application which became abandoned or in which the proceedings were terminated and which application is referenced by either a published application, an application open to public inspections or an issued patent.

9. A record from this system of records may be disclosed, as a routine use, to a Federal, State, or local law enforcement agency, if the USPTO becomes aware of a violation or potential violation of law or regulation.

Electronic Patent Application Fee Transmittal	
Application Number:	13310755
Filing Date:	04-Dec-2011
Title of Invention:	USER INTERFACE
First Named Inventor/Applicant Name:	Magnus Goertz
Filer:	Marc Aron Berger
Attorney Docket Number:	NEONODE.P039
Filed as Large Entity	

Utility under 35 USC 111(a) Filing Fees

Description	Fee Code	Quantity	Amount	Sub-Total in USD($)
Basic Filing:				
Pages:				
Claims:				
Miscellaneous-Filing:				
Petition:				
Patent-Appeals-and-Interference:				
Post-Allowance-and-Post-Issuance:				
Extension-of-Time:				

Description	Fee Code	Quantity	Amount	Sub-Total in USD($)
Miscellaneous:				
Submission- Information Disclosure Stmt	1806	1	180	180
		Total in USD ($)		**180**

Electronic Acknowledgement Receipt

EFS ID:	13309172
Application Number:	13310755
International Application Number:	
Confirmation Number:	1066
Title of Invention:	USER INTERFACE
First Named Inventor/Applicant Name:	Magnus Goertz
Customer Number:	75660
Filer:	Marc Aron Berger
Filer Authorized By:	
Attorney Docket Number:	NEONODE.P039
Receipt Date:	23-JUL-2012
Filing Date:	04-DEC-2011
Time Stamp:	02:46:15
Application Type:	Utility under 35 USC 111(a)

Payment information:

Submitted with Payment	yes
Payment Type	Credit Card
Payment was successfully received in RAM	$180
RAM confirmation Number	7894
Deposit Account	
Authorized User	

File Listing:

Document Number	Document Description	File Name	File Size(Bytes)/ Message Digest	Multi Part /.zip	Pages (if appl.)

1	Information Disclosure Statement (IDS) Form (SB08)	NEONODE-P039_InformationDisclosureStatement_07-23-2012.pdf	612688 00bb7f9f43694290fc5fb6694086a8d93fb7b334	no	4
Warnings:					
Information:					
2	Non Patent Literature	PLAISANT.pdf	4245348 c895f932134bbc3f0a83cf13ed75a1ed67abdd93	no	2
Warnings:					
Information:					
3	Fee Worksheet (SB06)	fee-info.pdf	30275 eb858d9dd3463f0e00926699c8779ab328e90447	no	2
Warnings:					
Information:					
			Total Files Size (in bytes):	4888311	

This Acknowledgement Receipt evidences receipt on the noted date by the USPTO of the indicated documents, characterized by the applicant, and including page counts, where applicable. It serves as evidence of receipt similar to a Post Card, as described in MPEP 503.

<u>New Applications Under 35 U.S.C. 111</u>
If a new application is being filed and the application includes the necessary components for a filing date (see 37 CFR 1.53(b)-(d) and MPEP 506), a Filing Receipt (37 CFR 1.54) will be issued in due course and the date shown on this Acknowledgement Receipt will establish the filing date of the application.

<u>National Stage of an International Application under 35 U.S.C. 371</u>
If a timely submission to enter the national stage of an international application is compliant with the conditions of 35 U.S.C. 371 and other applicable requirements a Form PCT/DO/EO/903 indicating acceptance of the application as a national stage submission under 35 U.S.C. 371 will be issued in addition to the Filing Receipt, in due course.

<u>New International Application Filed with the USPTO as a Receiving Office</u>
If a new international application is being filed and the international application includes the necessary components for an international filing date (see PCT Article 11 and MPEP 1810), a Notification of the International Application Number and of the International Filing Date (Form PCT/RO/105) will be issued in due course, subject to prescriptions concerning national security, and the date shown on this Acknowledgement Receipt will establish the international filing date of the application.

Attorney's Docket No.: NEONODE.P039 *PATENT*

IN THE UNITED STATES PATENT AND TRADEMARK OFFICE

In Re Patent Application of:	)	
	)	Examiner: Ryan F. Pitaro
Magnus Goertz	)	
	)	Art Unit: 2171
Application No: 13/310,755	)	
	)	
Filed: December 4, 2011	)	
	)	
For: USER INTERFACE	)	
_____	)	

Mail Stop AMENDMENT
Commissioner for Patents
P. O. Box 1450
Alexandria, VA 22313-1450

AMENDMENT AND RESPONSE TO OFFICE ACTION

UNDER 37 C.F.R. §1.111

In response to the Office Action dated May 11, 2012 and pursuant to 37 C.F.R. §1.111, applicant respectfully requests that the above-identified application be amended as follows.

IN THE CLAIMS:

Please withdraw claims **19**, **20** and **28** – **36**.

Please cancel claims **22** - **27** without prejudice.

Please substitute the following claims for the claims with the same number.

1. – **18.** (canceled)

19. (withdrawn) A non-transitory computer readable medium storing computer program code which, when executed by a mobile handheld device that has a touch sensitive display, instructs the device (i) to display a notification of an incoming phone call, and (ii) to accept the call in response to a multi-step operation comprising an object touching the touch sensitive display, and the object gliding along the touch sensitive display in a specific direction.

20. (withdrawn) The computer readable medium of claim **19**, wherein the program code instructs the device (iii) to disconnect the call in response to a multi-step operation comprising an object touching the touch sensitive area, and the object gliding the object along the touch sensitive display in a direction opposite to the specific direction.

21. (currently amended) A non-transitory computer readable medium storing ~~computer program code~~ instructions, which, when executed by a processor of ~~a mobile handheld device that has a touch sensitive display, instructs the device (i) to display a representation of a function in the touch sensitive display, (ii) to display a plurality of icons in the touch sensitive display, each icon representing an application,~~ an electronic device, cause the processor to enable a user interface of the

device, the user interface comprising a home state that presents controls for a plurality of pre-designated system functions, and a touch sensitive area in which a graphic associated with the home state is provided, wherein the user interface transitions to the home state in response to a multi-step ~~operation~~ user gesture comprising (i) an object touching the touch sensitive ~~display~~ area at a location where the ~~function representation~~ graphic is ~~displayed~~ provided, and (ii) the object gliding along the touch sensitive ~~display~~ area away from the touched location, ~~and (iii) to activate one of the applications in response to a tap on its icon~~.

22. – **27.** (canceled)

28. (withdrawn) A computer readable medium storing computer program code, which, when executed by a mobile handheld device having a touch sensitive display, instructs the device (i) to display a list of files of a first type, and (ii) to change the list to display files of a second type in response to a tap on the display.

29. (withdrawn) The computer readable medium of claim **28**, wherein the computer program code instructs the device to (iii) display a representation of a file type, and wherein the device changes the list in response to a tap on the representation of the file type.

30. (withdrawn) The computer readable medium of claim **28**, wherein the files of the first type are data files, and the files of the second type are application files.

31. (withdrawn) A computer readable medium storing computer program code, which, when executed by a mobile handheld device that has a touch sensitive display, instructs the device to (i) to display a data input keypad for a user to enter data, and to display a text field for entered data, (ii) to display representations of a plurality of applications, and (iii) to activate one of the applications and to have the application use the entered data, in response to a tap on its representation.

32. (withdrawn) The computer readable medium of claim **31**, wherein the plurality of applications includes a telephone application that uses the entered data as a telephone number.

33. (withdrawn) The computer readable medium of claim **31**, wherein the plurality of applications includes a text messaging application that uses the entered data as a text message.

34. (withdrawn) The computer readable medium of claim **33**, wherein the text messaging application is a short messaging service (SMS) application.

35. (withdrawn) The computer readable medium of claim **33**, wherein the text messaging application is an e-mail application.

36. (withdrawn) The computer readable medium of claim **31**, wherein the plurality of applications includes a contact list application that stores the entered data as retrievable contact information.

Please add the following new claims.

37. (new) The computer readable medium of claim **21**, wherein any state transition elicited by a user gesture that begins at a location at which the graphic is provided, transitions to the home state.

38. (new) The computer readable medium of claim **21**, wherein a tap alone on the graphic does not cause transition to the home state.

39. (new) The computer readable medium of claim **21**, wherein the home state does not present controls within a window frame.

40. (new) The computer readable medium of claim **21**, wherein the plurality of pre-designated system functions comprises a help function.

41. (new) The computer readable medium of claim **21**, wherein the plurality of pre-designated system functions comprises a clock function.

42. (new) The computer readable medium of claim **21**, wherein the plurality of pre-designated system functions comprises an alarm function.

REMARKS

Applicants express appreciation to the Examiner for the courtesy of an interview granted to applicant's representative Marc A. Berger (Reg. No. 44,029) and inventor Joseph Shain. The interview was held by telephone on Tuesday, May 8, 2012. The substance of the interview focused on proposed amendments to claim **21**, and the references of Carlson, Palm Organizers: Visual Quickstart Guide ("Carlson"), and Gough et al., US Patent No. 5,603,053 ("Gough").

Applicant's representative has carefully studied the outstanding Office Action. The present amendment is intended to place the application in condition for allowance and is believed to overcome all of the objections and rejections made by the Office Action. Favorable reconsideration and allowance of the application are respectfully requested.

Applicant has withdrawn claims **19**, **20** and **28** – **36** and has canceled claims **22** - **27** without disclaimer of the ability to pursue the subject matter of these claims in a continuation, divisional or other application. Applicant has amended claim **21** without disclaiming the right to pursue the subject matter of this claim prior to amendment. Applicant has added new claims **37** – **42**. No new matter has been introduced, and support for the new claims and the claim amendments is provided below. Claims **21** and **37** – **42** are presented for examination.

Claim Rejections – 35 U.S.C. §112

On page 2, the Office Action has rejected claims **19**, **20** and **27** under 35 U.S.C. §112, first paragraph, as failing to comply with the written description requirement and as failing to comply with the enablement requirement. Applicant has withdrawn claims **19** and **20** and

has canceled claim **27** without acquiescence to the Office Action's reasons for rejection, and respectfully submits that rejection of these claims is thus rendered moot.

Priority

On pages 2 and 3, the Office Action has asserted that claims **19** and **20** will not receive priority to the earlier filed application. Applicant has withdrawn claims **19** and **20** without acquiescence to the Office Action's assertion.

Elections/Restrictions

On pages 3 – 6, the Office Action has indicated that the claims include four distinct inventions, and has required restriction to one of the four inventions. Applicant hereby elects Invention II, claims **21** – **27**, without traverse.

Claim Rejections – 35 U.S.C. §101

On pages 6 and 7, the Office Action has rejected claims **21** – **36** under 35 U.S.C. §101 as being directed to non-statutory subject matter. Applicants have amended claim **21** to recite a non-transitory computer readable medium.

Claim Rejections – 35 U.S.C. §102

On pages 7 – 9, the Office Action has rejected claims **19** and **20** under 35 U.S.C. §102(e) as being anticipated by Tsuei, US Publication No. 2009/0285383 A1. Applicant has withdrawn claims **19** and **20** without acquiescence to the Office Action's reasons for rejection, and respectfully submits that rejection of these claims is thus rendered moot.

On pages 9 and 10, the Office Action has rejected claims **28** - **30** under 35 U.S.C. §102(e) as being anticipated by Ausems et al., US Publication No. 2003/0013483 A1. Applicant has withdrawn claims **28** - **30** without acquiescence to the Office Action's reasons for rejection, and respectfully submits that rejection of these claims is thus rendered moot.

Claim Rejections – 35 U.S.C. §103

On pages 10 – 12, the Office Action has rejected claims **21** – **26** under 35 U.S.C. §103(a) as being unpatentable over Pogue, Palm Pilot: The Ultimate Guide ("Pogue"), in view of Gough. Applicant notes that the references attributed to Pogue in the Office Action appear to correspond instead to Carlson, Palm Organizers: Visual Quickstart Guide ("Carlson"). As such, Applicant addresses Carlson instead of Pogue below. Applicant has canceled claims **22** - **26** without acquiescence to the Office Action's reasons for rejection, and respectfully submits that rejection of these claims is thus rendered moot.

On page 13, the Office Action has rejected claim **27** under 35 U.S.C. §103(a) as being unpatentable over Pogue, in view of De Greef et al., US Patent No. 6,549,217 ("De Greef"). Applicant has canceled claim **27** without acquiescence to the Office Action's reasons for rejection, and respectfully submits that rejection of this claim is thus rendered moot.

On pages 13 – 15, the Office Action has rejected claims **31**, **32**, **35** and **36** under 35 U.S.C. §103(a) as being unpatentable over Kraft et al., US Publication No. 2003/009512 A1 ("Kraft"), in view of Liao, US Publication No. 2004/0021681 A1 ("Liao"). Applicant has withdrawn claims **31**, **32**, **35** and **36** without acquiescence to the Office Action's

reasons for rejection, and respectfully submits that rejection of these claims is thus rendered moot.

On pages 15 and 16, the Office Action has rejected claims **33** and **34** under 35 U.S.C. §103(a) as being unpatentable over Kraft and Liao in view of Williams, US Patent No. 7,155,683 ("Williams"). Applicant has withdrawn claims **33** and **34** without acquiescence to the Office Action's reasons for rejection, and respectfully submits that rejection of these claims is thus rendered moot.

Brief Discussion of Applied References

Carlson is a user guide for the PALM PILOT®, which is a personal digital assistant PDA with a display glass comprising a touch screen. The PALM PILOT® touch screen is divided into two sections; namely, an upper display area, and a lower silkscreen and graffiti area. The silkscreen and graffiti area has a central area for writing characters with a stylus, bordered on the left and right sides by four buttons printed on the display glass. Each button activates a respective function in response to a tap on the button. The printed buttons provide fast access for popular functions, regardless of what is being displayed in the upper display area. The one-stroke pen drag described in Figure 2.22 of Carlson provides fast access to one additional function for which a representation is not provided.

Gough describes a method of launching an input utility in a windows-based user interface. Windows-based user interfaces provide a desktop work area in which a user opens an application in a window covering only a portion of the desktop. This allows the user to view the uncovered portion of the desktop while interacting with the open application. The user may want to position the application window at a specific location on the desktop such that the open window does not block

desktop information or other windows that the user wishes to view. In Gough, a keyboard input utility is opened in a window that covers a portion of the desktop (Gough/ keyboard image 60 in FIG. 4b). In order to enable the user to select a location on the desktop for opening the keyboard input utility window, Gough employs a user interface that presents a floating palette with an icon representing a keyboard input utility on the desktop (Gough/ palette 40 and icon 48 in FIGS. 2A and 2B). A user drags the icon representing the keyboard utility from the palette to a desired location on the desktop to open the keyboard input utility window at that location (Gough/ col. 2, lines 64 - 66; col. 6, lines 35 - 44; FIG. 8, step 128 and accompanying description at col. 8, line 60 - col. 9, line 6).

Gough can open the keyboard input utility in two ways; namely, by a tap, i.e., click, on the icon, or by dragging the icon from the palette to a desired location on the desktop. When activating the icon by a tap, the virtual keyboard is opened at a predetermined location on the desktop (Gough/ col. 6, lines 44 – 47). Activating the icon by a drag enables the user to position the virtual keyboard at a user-desired location on the desktop; namely, at the final location of the drag.

Brief Discussion of Additional References

Regarding novelty of the subject matter of claim **21**, applicant is also addressing the references of Beernink et al., US Patent No. 5,612,719 ("Beernink"), and Lee, US Patent No. 6,292,179 ("Lee"), which were disclosed in applicant's IDS filed on February 8, 2012; and Hirshberg, US Publication No. 2002/0027549 ("Hirshberg"), which was disclosed in applicant's IDS of December 4, 2011.

Beernink describes a gesture-sensitive button for a graphical user interface in a pen-based computer system. As pointed out

in Beernink, prior art buttons only perform a single function or process upon activation, and since it is desirable to provide a number of different functions, computer screens become littered with button images (Beernink/ col. 1, lines 61 – 66). In order to reduce the total number of buttons, Beernink describes a gesture-sensitive button capable of detecting more than one screen gesture. The gesture-sensitive button allows a single button to control a number of user functions and configurations, and reduces the number of button images required on the screen (Beernink/ col. 2, lines 7 – 12, 18, 19, 28 – 30 and 37 – 39; col. 6, lines 18 – 23). According to Beernink, the gesture for activating a function associated with a button is a tap gesture (Beernink/ col. 8, lines 19 – 21). Beernink uses a check-mark gesture and an X-mark gesture to enable/disable certain configuration options for the activated function. In particular, one of Beernink's buttons activates a function for recognition of text and graphics written by a user on the screen. In response to a check gesture, a pop-pup dialog box appears for configuring types of writing that are enabled, including formula, text and graphics (Beernink/ FIGS. 4b and 9). In response to an X-mark gesture, all forms of recognition are enabled (Beernink/ col. 8, lines 44 – 47). As such, Beernink relates to gestures that are used to enable or disable user interface options.

Lee describes a touch screen user interface for a compact multi-functional keypad that is operated using a stylus. Lee addresses the problem of how to effectively provide the multitude of different keys required for a full alphanumeric keypad on a small surface without reducing the key size to the extent that it is difficult to rapidly and accurate input data using the keys (Lee/ col. 1, lines 20 – 23). Lee also addresses a problem of the gesture-sensitive button of Beernink, whereby the second gesture opens a pop-up menu with additional options

for the user to select. As such, activation of a function in Beernink requires two steps; namely, (i) performing a check-mark or X-mark gesture, and (ii) selecting an option from the pop-up menu (Lee/ col. 1, lines 39 – 50). In order to overcome both of these problems, Lee describes grouping several characters, typically, 4 – 9 characters, in a single key (Lee/ keys 42, 52, 61, 71 and 81 in respective FIGS. 4 – 8). As such, the number of keys is reduced and the keys are large enough to facilitate easy key selection within the available area on a handheld device (Lee/ col. 7, lines 64 – 67). In order to enter a character using Lee, a user touches a key representing several characters with a stylus, and then drags the stylus in a particular direction to select one of the several characters. Thus Lee relates to sweep gestures for selecting a character for keyboard input.

Hirshberg describes a touch screen user interface for a compact multi-functional keypad that is operated using a finger. Like Lee, Hirshberg addresses the problem of how to effectively provide the 40 – 60 different keys required for a full alphanumeric keypad on a small surface that cannot reasonably accommodate this many keys (Hirshberg/ paragraph [0050]). And like Lee, Hirshberg describes grouping several characters, typically 4 – 6 characters, in a single key. As such, the number of keys is reduced, and the keys fit within an available area on a handheld device (Hirshberg/ paragraph [0051]). In order to enter a character using Hirshberg, a user touches a key representing several characters, and then drags his finger in a particular direction to select one of the several characters. Thus Hirshberg relates to sweep gestures for selecting a character for keyboard input.

In distinction to Beernink, Lee and Hirshberg, the subject matter of claim **21** includes the feature of a home state that presents controls for a plurality of pre-designated system functions, and

the feature that the user interface transitions to the home state in response to a multi-step user gesture comprising (i) an object touching the touch sensitive area at a location where the graphic is provided, and (ii) the object gliding along the touch sensitive area away from the touched location.

Response to Office Action Rejections

In order to further clarify the distinctions between the claimed subject matter and the applied references, applicants have amended claim **21** to include the feature of a home state that presents controls for a plurality of pre-designated system functions, and the feature that the user interface transitions to the home state in response to a multi-step user gesture comprising (i) an object touching the touch sensitive area at a location where the graphic is provided, and (ii) the object gliding along the touch sensitive area away from the touched location.

The touch-and-glide user gesture in Gough is used for opening a keypad. The one-stroke Palm gesture in Carlson is used for one of five options; namely, (1) turning a backlight on and off, (2) opening a keyboard, (3) opening a graffiti help, (4) locking the Palm, and (5) sending a currently selected memo, to-do-item, calendar appointment or address book entry to a nearby Palm device within infrared range. None of these functions transitions the user interface to a home state that presents controls for a plurality of pre-designated system functions.

The SwitchHack utility described on page 7 and in Figure 1.3 of Pogue opens a pop-up window within a running application that allows a user to toggle between the running application and a different application selected from a list of recently run applications. As

such, this utility does not transition the user interface to a home state that presents controls for a plurality of pre-designated system functions.

The Swipe utility launcher described on page 30 of Pogue allows a user to define up to seven pen actions, each triggered by a single pen movement, starting in the silkscreened area at the bottom of the Palm screen and moving into the upper half of the screen. The different strokes are distinguished by the direction and the start location of the swipe. However, this utility can only be configured to associate its various sweep gestures with the five options listed above, or with a desk accessory installed on the Palm. Desk accessories are applications that are coded so that they do not appear in the standard screen when a user taps the silkscreen applications button. E.g., a desk accessory may turn a backlight on, display a clock, lookup a phone number, or pop up a calculator. As such, this utility does not transition the user interface to a home state that presents controls for a plurality of pre-designated system functions.

The rejections of the claims under 35 U.S.C. §103 will now be dealt with specifically.

Claims 21 and 37 - 42

Independent claim **21** for a computer readable storage medium, as amended, recites the features of

"*the user interface comprising* ***a home state*** *that presents controls for* ***a plurality of pre-designated system functions***", and

"*the user interface* ***transitions to the home state in response to a multi-step user gesture*** *comprising (i) an object touching the touch sensitive area at a location where graphic is provided,*

and (ii) the object gliding along the touch sensitive area away from the touched location".

As explained hereinabove, these features are neither shown nor suggested in Carlson, Gough, Pogue, Beernink, Lee or Hirshberg.

Because claims **37** – **42** depend from claim **21** and include additional features, applicants respectfully submit that claims **37** – **42** are not anticipated or rendered obvious by Pogue, Gough, Beernink, Lee or Hirshberg, taken alone or in combination.

Accordingly claims **21** and **37** – **42** are deemed to be allowable.

Support for New and Amended Claims in Original Specification

Independent claim **21** for a computer readable storage medium has been amended to include the feature of a home state that presents controls for a plurality of system functions, and the feature that the user interface transitions to the home state in response to a multi-step user gesture comprising (i) an object touching the touch sensitive area at a location where the graphic is provided, and (ii) the object gliding along the touch sensitive area away from the touched location. This feature is supported in the original specification at least by page 5, line 24 - 27, by page 6, lines 8 – 11 and by FIGS. 1 - 3, which show that the user interface transitions to the home state of FIG. 3 in response to the multi-step gesture being applied at graphic 21 of FIG. 1.

New dependent claim **37** includes the feature that any state transition elicited by a user gesture that begins at a location at which the graphic is provided, transitions to the home state. This feature is supported in the original specification at least by page 6, lines 8 – 11 and by FIGS. 1 and 3. The only response associated with a gesture beginning at graphic 21 of FIG. 1 is a transition to the home state.

New dependent claim **38** includes the feature that a tap alone on the graphic does not cause transition to the home state. This feature is supported in the original specification at least by page 2, lines 25 – 28, which only describe a touch-and-glide gesture associated with graphic 21 for presenting controls.

New dependent claim **39** includes the feature that the home state does not present controls within a window frame. This feature is supported in the original specification at least by FIG. 3.

New dependent claims **40** - **42** include the features that the plurality of pre-designated system functions includes a help utility function, a clock function and an alarm function, respectively. These features are supported in the original specification at least by page 6, lines 10 and 11, and by elements 211 and 215 of FIG. 3.

For the foregoing reasons, applicants respectfully submit that the applicable objections and rejections have been overcome and that the claims are in condition for allowance.

If any matters can be resolved by telephone, applicants request that the Patent and Trademark Office please contact applicants' representative at the telephone number listed below.

Respectfully submitted,

SOQUEL GROUP LLC

Dated: July 3, 2012

/Marc A. Berger/
Marc A. Berger
Reg. No. 44,029

P.O. Box 691
Soquel, CA 95073
(831) 426-8200
Customer No. 75660

Electronic Acknowledgement Receipt

EFS ID:	13166222
Application Number:	13310755
International Application Number:	
Confirmation Number:	1066
Title of Invention:	USER INTERFACE
First Named Inventor/Applicant Name:	Magnus Goertz
Customer Number:	75660
Filer:	Marc Aron Berger
Filer Authorized By:	
Attorney Docket Number:	NEONODE.P039
Receipt Date:	03-JUL-2012
Filing Date:	04-DEC-2011
Time Stamp:	09:29:56
Application Type:	Utility under 35 USC 111(a)

Payment information:

Submitted with Payment	no

File Listing:

Document Number	Document Description	File Name	File Size(Bytes)/ Message Digest	Multi Part /.zip	Pages (if appl.)
1		NEONODE-P039_Amendment_07-03-2012.pdf	104077 5c245ba123b1d3becf9d68c7f8e1ea9c70d70473	yes	16

	Multipart Description/PDF files in .zip description		
	Document Description	**Start**	**End**
	Amendment/Req. Reconsideration-After Non-Final Reject	1	1
	Claims	2	5
	Applicant Arguments/Remarks Made in an Amendment	6	16
Warnings:			
Information:			
	Total Files Size (in bytes):	104077	

This Acknowledgement Receipt evidences receipt on the noted date by the USPTO of the indicated documents, characterized by the applicant, and including page counts, where applicable. It serves as evidence of receipt similar to a Post Card, as described in MPEP 503.

New Applications Under 35 U.S.C. 111
If a new application is being filed and the application includes the necessary components for a filing date (see 37 CFR 1.53(b)-(d) and MPEP 506), a Filing Receipt (37 CFR 1.54) will be issued in due course and the date shown on this Acknowledgement Receipt will establish the filing date of the application.

National Stage of an International Application under 35 U.S.C. 371
If a timely submission to enter the national stage of an international application is compliant with the conditions of 35 U.S.C. 371 and other applicable requirements a Form PCT/DO/EO/903 indicating acceptance of the application as a national stage submission under 35 U.S.C. 371 will be issued in addition to the Filing Receipt, in due course.

New International Application Filed with the USPTO as a Receiving Office
If a new international application is being filed and the international application includes the necessary components for an international filing date (see PCT Article 11 and MPEP 1810), a Notification of the International Application Number and of the International Filing Date (Form PCT/RO/105) will be issued in due course, subject to prescriptions concerning national security, and the date shown on this Acknowledgement Receipt will establish the international filing date of the application.

PTO/SB/06 (07-06)
Approved for use through 1/31/2007. OMB 0651-0032
U.S. Patent and Trademark Office; U.S. DEPARTMENT OF COMMERCE
Under the Paperwork Reduction Act of 1995, no persons are required to respond to a collection of information unless it displays a valid OMB control number.

PATENT APPLICATION FEE DETERMINATION RECORD

Substitute for Form PTO-875

Application or Docket Number	Filing Date	☐ To be Mailed
13/310,755	12/04/2011	

APPLICATION AS FILED – PART I

	(Column 1)	(Column 2)	SMALL ENTITY ☐		OR	OTHER THAN SMALL ENTITY	
FOR	NUMBER FILED	NUMBER EXTRA	RATE ($)	FEE ($)		RATE ($)	FEE ($)
☐ BASIC FEE (37 CFR 1.16(a), (b), or (c))	N/A	N/A	N/A			N/A	
☐ SEARCH FEE (37 CFR 1.16(k), (i), or (m))	N/A	N/A	N/A			N/A	
☐ EXAMINATION FEE (37 CFR 1.16(o), (p), or (q))	N/A	N/A	N/A			N/A	
TOTAL CLAIMS (37 CFR 1.16(i))	minus 20 =	*	X $ =		OR	X $ =	
INDEPENDENT CLAIMS (37 CFR 1.16(h))	minus 3 =	*	X $ =			X $ =	
☐ APPLICATION SIZE FEE (37 CFR 1.16(s))	If the specification and drawings exceed 100 sheets of paper, the application size fee due is $250 ($125 for small entity) for each additional 50 sheets or fraction thereof. See 35 U.S.C. 41(a)(1)(G) and 37 CFR 1.16(s).						
☐ MULTIPLE DEPENDENT CLAIM PRESENT (37 CFR 1.16(j))							
* If the difference in column 1 is less than zero, enter "0" in column 2.			TOTAL			TOTAL	

APPLICATION AS AMENDED – PART II

AMENDMENT	07/03/2012	(Column 1) CLAIMS REMAINING AFTER AMENDMENT		(Column 2) HIGHEST NUMBER PREVIOUSLY PAID FOR	(Column 3) PRESENT EXTRA	SMALL ENTITY RATE ($)	ADDITIONAL FEE ($)	OR	OTHER THAN SMALL ENTITY RATE ($)	ADDITIONAL FEE ($)
	Total (37 CFR 1.16(i))	* 18	Minus	** 20	= 0	X $ =		OR	X $60=	0
	Independent (37 CFR 1.16(h))	* 4	Minus	***4	= 0	X $ =		OR	X $250=	0
	☐ Application Size Fee (37 CFR 1.16(s))									
	☐ FIRST PRESENTATION OF MULTIPLE DEPENDENT CLAIM (37 CFR 1.16(j))							OR		
						TOTAL ADD'L FEE		OR	TOTAL ADD'L FEE	0

AMENDMENT		(Column 1) CLAIMS REMAINING AFTER AMENDMENT		(Column 2) HIGHEST NUMBER PREVIOUSLY PAID FOR	(Column 3) PRESENT EXTRA	RATE ($)	ADDITIONAL FEE ($)	OR	RATE ($)	ADDITIONAL FEE ($)
	Total (37 CFR 1.16(i))	*	Minus	**	=	X $ =		OR	X $ =	
	Independent (37 CFR 1.16(h))	*	Minus	***	=	X $ =		OR	X $ =	
	☐ Application Size Fee (37 CFR 1.16(s))									
	☐ FIRST PRESENTATION OF MULTIPLE DEPENDENT CLAIM (37 CFR 1.16(j))							OR		
						TOTAL ADD'L FEE		OR	TOTAL ADD'L FEE	

* If the entry in column 1 is less than the entry in column 2, write "0" in column 3.

** If the "Highest Number Previously Paid For" IN THIS SPACE is less than 20, enter "20".

*** If the "Highest Number Previously Paid For" IN THIS SPACE is less than 3, enter "3".

The "Highest Number Previously Paid For" (Total or Independent) is the highest number found in the appropriate box in column 1.

Legal Instrument Examiner:
/MARQUITA JONES/

This collection of information is required by 37 CFR 1.16. The information is required to obtain or retain a benefit by the public which is to file (and by the USPTO to process) an application. Confidentiality is governed by 35 U.S.C. 122 and 37 CFR 1.14. This collection is estimated to take 12 minutes to complete, including gathering, preparing, and submitting the completed application form to the USPTO. Time will vary depending upon the individual case. Any comments on the amount of time you require to complete this form and/or suggestions for reducing this burden, should be sent to the Chief Information Officer, U.S. Patent and Trademark Office, U.S. Department of Commerce, P.O. Box 1450, Alexandria, VA 22313-1450. DO NOT SEND FEES OR COMPLETED FORMS TO THIS ADDRESS. **SEND TO: Commissioner for Patents, P.O. Box 1450, Alexandria, VA 22313-1450.**

If you need assistance in completing the form, call 1-800-PTO-9199 and select option 2.

PTO/SB/08a (01-10)
Approved for use through 07/31/2012. OMB 0651-0031
U.S. Patent and Trademark Office; U.S. DEPARTMENT OF COMMERCE
Under the Paperwork Reduction Act of 1995, no persons are required to respond to a collection of information unless it contains a valid OMB control number.

INFORMATION DISCLOSURE STATEMENT BY APPLICANT (**Not for submission under 37 CFR 1.99)**		
	Application Number	13310755
	Filing Date	2011-12-04
	First Named Inventor	Magnus Goertz
	Art Unit	2171
	Examiner Name	Ryan F. Pitaro
	Attorney Docket Number	NEONODE.P039

U.S.PATENTS						Remove
Examiner Initial*	Cite No	Patent Number	Kind Code[1]	Issue Date	Name of Patentee or Applicant of cited Document	Pages,Columns,Lines where Relevant Passages or Relevant Figures Appear
	1	5463725	A	1995-10-31	Henckel et al.	
	2	5748185	A	1998-05-05	Stephan et al.	
	3	5889236	A	1999-03-30	Gillespie et al.	
	4	5943044	A	1999-08-24	Martinelli et al.	
	5	6340979	B1	2002-01-22	Beaton et al.	
	6	6356287	B1	2002-03-12	Ruberry et al.	
	7	6529920	B1	2003-03-04	Arons et al.	
	8	6690365	B2	2004-02-10	Hinckley et al.	

INFORMATION DISCLOSURE STATEMENT BY APPLICANT (Not for submission under 37 CFR 1.99)		
	Application Number	13310755
	Filing Date	2011-12-04
	First Named Inventor	Magnus Goertz
	Art Unit	2171
	Examiner Name	Ryan F. Pitaro
	Attorney Docket Number	NEONODE.P039

	9	6690387	B2	2004-02-10	Zimmerman et al.	
	10	6707449	B2	2004-03-16	Hinckley et al.	
	11	6788292	B1	2004-09-07	Nako et al.	
	12	6874683	B1	2005-04-05	Keronen et al.	
	13	7441196	B2	2008-10-21	Gottfurcht et al.	
	14	8120625	B2	2012-02-21	Hinckley	

If you wish to add additional U.S. Patent citation information please click the Add button. Add

U.S.PATENT APPLICATION PUBLICATIONS Remove

Examiner Initial*	Cite No	Publication Number	Kind Code[1]	Publication Date	Name of Patentee or Applicant of cited Document	Pages,Columns,Lines where Relevant Passages or Relevant Figures Appear
	1	20010030641	A1	2001-10-18	Suzuki	
	2	20010043189	A1	2001-11-22	Brisebois et al.	
	3	20030060699	A1	2002-05-23	D'Agostini	

INFORMATION DISCLOSURE STATEMENT BY APPLICANT (Not for submission under 37 CFR 1.99)		
	Application Number	13310755
	Filing Date	2011-12-04
	First Named Inventor	Magnus Goertz
	Art Unit	2171
	Examiner Name	Ryan F. Pitaro
	Attorney Docket Number	NEONODE.P039

	4	20020075244	A1	2002-06-20	Tani et al.	
	5	20030043207	A1	2003-03-06	Duarte	
	6	20030076306	A1	2003-04-24	Zadesky et al.	
	7	20030122787	A1	2003-07-03	Zimmerman et al.	
	8	20040125143	A1	2004-07-01	Deaton et al.	

If you wish to add additional U.S. Published Application citation information please click the Add button. Add

FOREIGN PATENT DOCUMENTS Remove

Examiner Initial*	Cite No	Foreign Document Number[3]	Country Code[2] ¡	Kind Code[4]	Publication Date	Name of Patentee or Applicant of cited Document	Pages,Columns,Lines where Relevant Passages or Relevant Figures Appear	T[5]
	1							☐

If you wish to add additional Foreign Patent Document citation information please click the Add button Add

NON-PATENT LITERATURE DOCUMENTS Remove

Examiner Initials*	Cite No	Include name of the author (in CAPITAL LETTERS), title of the article (when appropriate), title of the item (book, magazine, journal, serial, symposium, catalog, etc), date, pages(s), volume-issue number(s), publisher, city and/or country where published.	T[5]
	1	SwitchHack 1.62",January 17, 2001, downloaded from http://web.archive.org/web/200101170650/http://www.deskfree.com/switchhack.html	☐

INFORMATION DISCLOSURE STATEMENT BY APPLICANT (Not for submission under 37 CFR 1.99)		
	Application Number	13310755
	Filing Date	2011-12-04
	First Named Inventor	Magnus Goertz
	Art Unit	2171
	Examiner Name	Ryan F. Pitaro
	Attorney Docket Number	NEONODE.P039

	2	swipe_readme.txt, May 8, 2001, downloaded in swipe.zip from http://web.archive.org/web/20010508013439/http://www.samsungshop.co.yu/palm/swipe.zip	☐
	3	"Desk Accessories",October 18, 2000, downoaded from http://web.archive.org/web/20001018025151/http://www.doublebang.com/resources/da.html	☐
	4	"Launch 'em 1.53", December 11, 1998, downloaded from http://www.5star-shareware.com/PDA/Palm/Utilities/launchem.html	☐
	5	Pogue, David, Palm Pilot: The Ultimate Guide, 2nd Edition, 1999, O'Reilly and Associates, Inc., pages 19, 27-36, 38-47, 80, 113, 494, 507, 509, 519-520.	☐

If you wish to add additional non-patent literature document citation information please click the Add button Add

EXAMINER SIGNATURE

Examiner Signature		Date Considered	

*EXAMINER: Initial if reference considered, whether or not citation is in conformance with MPEP 609. Draw line through a citation if not in conformance and not considered. Include copy of this form with next communication to applicant.

[1] See Kind Codes of USPTO Patent Documents at www.USPTO.GOV or MPEP 901.04. [2] Enter office that issued the document, by the two-letter code (WIPO Standard ST.3). [3] For Japanese patent documents, the indication of the year of the reign of the Emperor must precede the serial number of the patent document. [4] Kind of document by the appropriate symbols as indicated on the document under WIPO Standard ST.16 if possible. [5] Applicant is to place a check mark here if English language translation is attached.

INFORMATION DISCLOSURE STATEMENT BY APPLICANT (Not for submission under 37 CFR 1.99)		
	Application Number	13310755
	Filing Date	2011-12-04
	First Named Inventor	Magnus Goertz
	Art Unit	2171
	Examiner Name	Ryan F. Pitaro
	Attorney Docket Number	NEONODE.P039

CERTIFICATION STATEMENT

Please see 37 CFR 1.97 and 1.98 to make the appropriate selection(s):

☐ That each item of information contained in the information disclosure statement was first cited in any communication from a foreign patent office in a counterpart foreign application not more than three months prior to the filing of the information disclosure statement. See 37 CFR 1.97(e)(1).

OR

☐ That no item of information contained in the information disclosure statement was cited in a communication from a foreign patent office in a counterpart foreign application, and, to the knowledge of the person signing the certification after making reasonable inquiry, no item of information contained in the information disclosure statement was known to any individual designated in 37 CFR 1.56(c) more than three months prior to the filing of the information disclosure statement. See 37 CFR 1.97(e)(2).

☐ See attached certification statement.

☒ The fee set forth in 37 CFR 1.17 (p) has been submitted herewith.

☒ A certification statement is not submitted herewith.

SIGNATURE

A signature of the applicant or representative is required in accordance with CFR 1.33, 10.18. Please see CFR 1.4(d) for the form of the signature.

Signature	/Marc A. Berger/	Date (YYYY-MM-DD)	2012-06-12
Name/Print	Marc A. Berger	Registration Number	44029

This collection of information is required by 37 CFR 1.97 and 1.98. The information is required to obtain or retain a benefit by the public which is to file (and by the USPTO to process) an application. Confidentiality is governed by 35 U.S.C. 122 and 37 CFR 1.14. This collection is estimated to take 1 hour to complete, including gathering, preparing and submitting the completed application form to the USPTO. Time will vary depending upon the individual case. Any comments on the amount of time you require to complete this form and/or suggestions for reducing this burden, should be sent to the Chief Information Officer, U.S. Patent and Trademark Office, U.S. Department of Commerce, P.O. Box 1450, Alexandria, VA 22313-1450. DO NOT SEND FEES OR COMPLETED FORMS TO THIS ADDRESS. **SEND TO: Commissioner for Patents, P.O. Box 1450, Alexandria, VA 22313-1450.**

Privacy Act Statement

The Privacy Act of 1974 (P.L. 93-579) requires that you be given certain information in connection with your submission of the attached form related to a patent application or patent. Accordingly, pursuant to the requirements of the Act, please be advised that: (1) the general authority for the collection of this information is 35 U.S.C. 2(b)(2); (2) furnishing of the information solicited is voluntary; and (3) the principal purpose for which the information is used by the U.S. Patent and Trademark Office is to process and/or examine your submission related to a patent application or patent. If you do not furnish the requested information, the U.S. Patent and Trademark Office may not be able to process and/or examine your submission, which may result in termination of proceedings or abandonment of the application or expiration of the patent.

The information provided by you in this form will be subject to the following routine uses:

1. The information on this form will be treated confidentially to the extent allowed under the Freedom of Information Act (5 U.S.C. 552) and the Privacy Act (5 U.S.C. 552a). Records from this system of records may be disclosed to the Department of Justice to determine whether the Freedom of Information Act requires disclosure of these record s.

2. A record from this system of records may be disclosed, as a routine use, in the course of presenting evidence to a court, magistrate, or administrative tribunal, including disclosures to opposing counsel in the course of settlement negotiations.

3. A record in this system of records may be disclosed, as a routine use, to a Member of Congress submitting a request involving an individual, to whom the record pertains, when the individual has requested assistance from the Member with respect to the subject matter of the record.

4. A record in this system of records may be disclosed, as a routine use, to a contractor of the Agency having need for the information in order to perform a contract. Recipients of information shall be required to comply with the requirements of the Privacy Act of 1974, as amended, pursuant to 5 U.S.C. 552a(m).

5. A record related to an International Application filed under the Patent Cooperation Treaty in this system of records may be disclosed, as a routine use, to the International Bureau of the World Intellectual Property Organization, pursuant to the Patent Cooperation Treaty.

6. A record in this system of records may be disclosed, as a routine use, to another federal agency for purposes of National Security review (35 U.S.C. 181) and for review pursuant to the Atomic Energy Act (42 U.S.C. 218(c)).

7. A record from this system of records may be disclosed, as a routine use, to the Administrator, General Services, or his/her designee, during an inspection of records conducted by GSA as part of that agency's responsibility to recommend improvements in records management practices and programs, under authority of 44 U.S.C. 2904 and 2906. Such disclosure shall be made in accordance with the GSA regulations governing inspection of records for this purpose, and any other relevant (i.e., GSA or Commerce) directive. Such disclosure shall not be used to make determinations about individuals.

8. A record from this system of records may be disclosed, as a routine use, to the public after either publication of the application pursuant to 35 U.S.C. 122(b) or issuance of a patent pursuant to 35 U.S.C. 151. Further, a record may be disclosed, subject to the limitations of 37 CFR 1.14, as a routine use, to the public if the record was filed in an application which became abandoned or in which the proceedings were terminated and which application is referenced by either a published application, an application open to public inspections or an issued patent.

9. A record from this system of records may be disclosed, as a routine use, to a Federal, State, or local law enforcement agency, if the USPTO becomes aware of a violation or potential violation of law or regulation.

Electronic Patent Application Fee Transmittal	
Application Number:	13310755
Filing Date:	04-Dec-2011
Title of Invention:	USER INTERFACE
First Named Inventor/Applicant Name:	Magnus Goertz
Filer:	Marc Aron Berger
Attorney Docket Number:	NEONODE.P039
Filed as Large Entity	

Utility under 35 USC 111(a) Filing Fees

Description	Fee Code	Quantity	Amount	Sub-Total in USD($)
Basic Filing:				
Pages:				
Claims:				
Miscellaneous-Filing:				
Petition:				
Patent-Appeals-and-Interference:				
Post-Allowance-and-Post-Issuance:				
Extension-of-Time:				

Description	Fee Code	Quantity	Amount	Sub-Total in USD($)
Miscellaneous:				
Submission- Information Disclosure Stmt	1806	1	180	180
		Total in USD ($)		**180**

Electronic Acknowledgement Receipt	
EFS ID:	12987644
Application Number:	13310755
International Application Number:	
Confirmation Number:	1066
Title of Invention:	USER INTERFACE
First Named Inventor/Applicant Name:	Magnus Goertz
Customer Number:	75660
Filer:	Marc Aron Berger
Filer Authorized By:	
Attorney Docket Number:	NEONODE.P039
Receipt Date:	12-JUN-2012
Filing Date:	04-DEC-2011
Time Stamp:	03:37:48
Application Type:	Utility under 35 USC 111(a)

Payment information:

Submitted with Payment	yes
Payment Type	Credit Card
Payment was successfully received in RAM	$180
RAM confirmation Number	7513
Deposit Account	
Authorized User	

File Listing:

Document Number	Document Description	File Name	File Size(Bytes)/ Message Digest	Multi Part /.zip	Pages (if appl.)

1	Information Disclosure Statement (IDS) Form (SB08)	NEONODE-P039_InformationDisclosureStatement_06-12-2012.pdf	613744 2fbf10a78073fc2b0527512d5effdd48876ecdae	no	6
Warnings:					
Information:					
2	Non Patent Literature	SWIPE.pdf	49148 7b00546c7cfd8135390c8bd0fb7fb316dc28b0bb	no	5
Warnings:					
Information:					
3	Non Patent Literature	DESKACCESSORY.pdf	1523403 d5302035a2e11e412e98a5860de00cb31ff73d06	no	3
Warnings:					
Information:					
4	Non Patent Literature	LAUNCHEM.pdf	93996 9c82877c8d17c4413008e8f9ebe27fd0e5b56f2a	no	1
Warnings:					
Information:					
5	Non Patent Literature	SWITCHHACK.pdf	1486285 be980dd2cf8f6514c1001323d23d992fdf604619	no	3
Warnings:					
Information:					
6	Non Patent Literature	POGUE-2.pdf	877232 74fdb992c25b9d2c2dd76739e64fcbcc395d707a	no	28
Warnings:					
Information:					
7	Fee Worksheet (SB06)	fee-info.pdf	30275 f8b12868b65b11d751cb1b632b489cc523b25ad0	no	2
Warnings:					
Information:					
			Total Files Size (in bytes):	4674083	

This Acknowledgement Receipt evidences receipt on the noted date by the USPTO of the indicated documents, characterized by the applicant, and including page counts, where applicable. It serves as evidence of receipt similar to a Post Card, as described in MPEP 503.

New Applications Under 35 U.S.C. 111
If a new application is being filed and the application includes the necessary components for a filing date (see 37 CFR 1.53(b)-(d) and MPEP 506), a Filing Receipt (37 CFR 1.54) will be issued in due course and the date shown on this Acknowledgement Receipt will establish the filing date of the application.

National Stage of an International Application under 35 U.S.C. 371
If a timely submission to enter the national stage of an international application is compliant with the conditions of 35 U.S.C. 371 and other applicable requirements a Form PCT/DO/EO/903 indicating acceptance of the application as a national stage submission under 35 U.S.C. 371 will be issued in addition to the Filing Receipt, in due course.

New International Application Filed with the USPTO as a Receiving Office
If a new international application is being filed and the international application includes the necessary components for an international filing date (see PCT Article 11 and MPEP 1810), a Notification of the International Application Number and of the International Filing Date (Form PCT/RO/105) will be issued in due course, subject to prescriptions concerning national security, and the date shown on this Acknowledgement Receipt will establish the international filing date of the application.

UNITED STATES PATENT AND TRADEMARK OFFICE

UNITED STATES DEPARTMENT OF COMMERCE
United States Patent and Trademark Office
Address: COMMISSIONER FOR PATENTS
P.O. Box 1450
Alexandria, Virginia 22313-1450
www.uspto.gov

APPLICATION NO.	FILING DATE	FIRST NAMED INVENTOR	ATTORNEY DOCKET NO.	CONFIRMATION NO.
13/310,755	12/04/2011	Magnus Goertz	NEONODE.P039	1066

75660 7590 05/11/2012

Soquel Group, LLC
P.O. Box 691
Soquel, CA 95073

EXAMINER	
PITARO, RYAN F	
ART UNIT	PAPER NUMBER
2171	

NOTIFICATION DATE	DELIVERY MODE
05/11/2012	ELECTRONIC

Please find below and/or attached an Office communication concerning this application or proceeding.

The time period for reply, if any, is set in the attached communication.

Notice of the Office communication was sent electronically on above-indicated "Notification Date" to the following e-mail address(es):

pto@soquelgroup.com
rblumberg@soquelgroup.com
mberger@soquelgroup.com

Office Action Summary	Application No.	Applicant(s)	
	13/310,755	GOERTZ, MAGNUS	
	Examiner	Art Unit	
	RYAN PITARO	2171	

-- The MAILING DATE of this communication appears on the cover sheet with the correspondence address --

Period for Reply

A SHORTENED STATUTORY PERIOD FOR REPLY IS SET TO EXPIRE 3 MONTH(S) OR THIRTY (30) DAYS, WHICHEVER IS LONGER, FROM THE MAILING DATE OF THIS COMMUNICATION.

- Extensions of time may be available under the provisions of 37 CFR 1.136(a). In no event, however, may a reply be timely filed after SIX (6) MONTHS from the mailing date of this communication.
- If NO period for reply is specified above, the maximum statutory period will apply and will expire SIX (6) MONTHS from the mailing date of this communication.
- Failure to reply within the set or extended period for reply will, by statute, cause the application to become ABANDONED (35 U.S.C. § 133). Any reply received by the Office later than three months after the mailing date of this communication, even if timely filed, may reduce any earned patent term adjustment. See 37 CFR 1.704(b).

Status

1)☒ Responsive to communication(s) filed on *28 December 2011*.

2a)☐ This action is **FINAL**. 2b)☒ This action is non-final.

3)☐ An election was made by the applicant in response to a restriction requirement set forth during the interview on _____; the restriction requirement and election have been incorporated into this action.

4)☐ Since this application is in condition for allowance except for formal matters, prosecution as to the merits is closed in accordance with the practice under *Ex parte Quayle*, 1935 C.D. 11, 453 O.G. 213.

Disposition of Claims

5)☒ Claim(s) *19-36* is/are pending in the application.

5a) Of the above claim(s) _____ is/are withdrawn from consideration.

6)☐ Claim(s) _____ is/are allowed.

7)☒ Claim(s) *19-36* is/are rejected.

8)☐ Claim(s) _____ is/are objected to.

9)☐ Claim(s) _____ are subject to restriction and/or election requirement.

Application Papers

10)☐ The specification is objected to by the Examiner.

11)☐ The drawing(s) filed on _____ is/are: a)☐ accepted or b)☐ objected to by the Examiner.

Applicant may not request that any objection to the drawing(s) be held in abeyance. See 37 CFR 1.85(a).

Replacement drawing sheet(s) including the correction is required if the drawing(s) is objected to. See 37 CFR 1.121(d).

12)☐ The oath or declaration is objected to by the Examiner. Note the attached Office Action or form PTO-152.

Priority under 35 U.S.C. § 119

13)☐ Acknowledgment is made of a claim for foreign priority under 35 U.S.C. § 119(a)-(d) or (f).

a)☐ All b)☐ Some * c)☐ None of:

1.☐ Certified copies of the priority documents have been received.

2.☐ Certified copies of the priority documents have been received in Application No. _____.

3.☐ Copies of the certified copies of the priority documents have been received in this National Stage application from the International Bureau (PCT Rule 17.2(a)).

* See the attached detailed Office action for a list of the certified copies not received.

Attachment(s)

1) ☒ Notice of References Cited (PTO-892)
2) ☐ Notice of Draftsperson's Patent Drawing Review (PTO-948)
3) ☒ Information Disclosure Statement(s) (PTO/SB/08) Paper No(s)/Mail Date *12/4/2011,2/8/2012*.
4) ☐ Interview Summary (PTO-413) Paper No(s)/Mail Date. _____ .
5) ☐ Notice of Informal Patent Application
6) ☐ Other: _____.

Claim Rejections - 35 USC § 112

The following is a quotation of the first paragraph of 35 U.S.C. 112:

> The specification shall contain a written description of the invention, and of the manner and process of making and using it, in such full, clear, concise, and exact terms as to enable any person skilled in the art to which it pertains, or with which it is most nearly connected, to make and use the same and shall set forth the best mode contemplated by the inventor of carrying out his invention.

Claims 19-20, 27 are rejected under 35 U.S.C. 112, first paragraph, as failing to comply with the written description requirement. The claim(s) contains subject matter which was not described in the specification in such a way as to reasonably convey to one skilled in the relevant art that the inventor(s), at the time the application was filed, had possession of the claimed invention.

Claims 19-20, 27 are rejected under 35 U.S.C. 112, first paragraph, as failing to comply with the enablement requirement. The claim(s) contains subject matter which was not described in the specification in such a way as to enable one skilled in the art to which it pertains, or with which it is most nearly connected, to make and/or use the invention.

Priority

The later-filed application must be an application for a patent for an invention which is also disclosed in the prior application (the parent or original nonprovisional application or provisional application). The disclosure of the invention in the parent

application and in the later-filed application must be sufficient to comply with the requirements of the first paragraph of 35 U.S.C. 112. See *Transco Products, Inc. v. Performance Contracting, Inc.*, 38 F.3d 551, 32 USPQ2d 1077 (Fed. Cir. 1994).

The disclosure of the prior-filed application, Application No. 10/315250, fails to provide adequate support or enablement in the manner provided by the first paragraph of 35 U.S.C. 112 for one or more claims of this application as pointed out above.

Claims 19-20, 27 have not met the requirements of the first paragraph 35 U.S.C. 112, as such the claims should be cancelled. Without conceding and solely in the interest of expediting prosecution Claims 19-20 will not receive priority to the earlier filed application and the claim's earliest effective filing date will be 12/4/2011 for purposes of art related rejections.

Election/Restrictions

Restriction to one of the following inventions is required under 35 U.S.C. 121:

I. Claims 19-20, drawn to Subcombination I, classified in class 715, subclass 833.

II. Claims 20-27, drawn to Subcombination II, classified in class 715, subclass 863.

III. Claims 28-30, drawn to Subcombination III, classified in class 715, subclass 841.

IV. Claims 31-36, drawn to Subcombination IV, classified in class 715, subclass 773.

The inventions are distinct, each from the other because of the following reasons:

Inventions I,II,III and IV are related as subcombinations disclosed as usable together in a single combination. The subcombinations are distinct if they do not overlap in scope and are not obvious variants, and if it is shown that at least one subcombination is separately usable.

In the instant case, subcombination I has separate utility such as an intuitive way of engaging/disengaging phone conversations preventing accidental answering.

In the instant case, subcombination II has separate utility such as intuitive function activation by gliding away.

In the instant case, subcombination III has separate utility such as switching between a plurality of applications.

In the instant case, subcombination IV has separate utility such as keypad entry.

See MPEP § 806.05(d).

Restriction for examination purposes as indicated is proper because all these inventions listed in this action are independent or distinct for the reasons given above and there would be a serious search and/or examination burden if restriction were not required because at least the following reason(s) apply:

Given the peculiar nature of the present applicant, Examiner, under great burden, has applied prior art with the election/restriction requirement in order to assist the Applicant in electing a group, since some of the groups are rejected under the first paragraph 35 U.S.C. 112. These groups may not be supported and therefore not eligible to be filed as a Continuation, Continuation-in-Part, and/or Divisional application. The Examiner has extended this courtesy in order to save the Applicant from filing erroneous continuing applications.

Applicant is advised that the reply to this requirement to be complete must include (i) an election of a invention to be examined even though the requirement may be traversed (37 CFR 1.143) **and (ii) identification of the claims encompassing the elected invention**.

The election of an invention may be made with or without traverse. To reserve a right to petition, the election must be made with traverse. If the reply does not distinctly and specifically point out supposed errors in the restriction requirement, the election shall be treated as an election without traverse. Traversal must be presented at the time of election in order to be considered timely. Failure to timely traverse the requirement will result in the loss of right to petition under 37 CFR 1.144. If claims are added after the election, applicant must indicate which of these claims are readable upon the elected invention.

Should applicant traverse on the ground that the inventions are not patentably distinct, applicant should submit evidence or identify such evidence now of record

showing the inventions to be obvious variants or clearly admit on the record that this is the case. In either instance, if the examiner finds one of the inventions unpatentable over the prior art, the evidence or admission may be used in a rejection under 35 U.S.C. 103(a) of the other invention.

The examiner has required restriction between subcombinations usable together. Where applicant elects a subcombination and claims thereto are subsequently found allowable, any claim(s) depending from or otherwise requiring all the limitations of the allowable subcombination will be examined for patentability in accordance with 37 CFR 1.104. See MPEP § 821.04(a).

Applicant is advised that if any claim presented in a continuation or divisional application is anticipated by, or includes all the limitations of, a claim that is allowable in the present application, such claim may be subject to provisional statutory and/or nonstatutory double patenting rejections over the claims of the instant application.

Claim Rejections - 35 USC § 101

35 U.S.C. 101 reads as follows:

> Whoever invents or discovers any new and useful process, machine, manufacture, or composition of matter, or any new and useful improvement thereof, may obtain a patent therefor, subject to the conditions and requirements of this title.

Claims 21-36 are rejected under 35 U.S.C. 101 because the claimed invention is directed to non-statutory subject matter.

As per claims 21-36 the applicant has failed to provide basis for the terminology "computer readable medium". Given the broadest reasonable interpretation, computer readable medium in meant to include a computer data signal embodied in a carrier

wave. Since propagation media in the context of this disclosure covers signals and carrier waves, which are not a manufacture within the meaning of 101, and electrical connection and optical fibers, on which the program is still unavailable to the processor, The program is still unable to act as a computer component and have its functionality realized and is therefore rejected under 101 as failing to be limited to embodiments which fall within a statutory category of invention.

Claim Rejections - 35 USC § 102

The following is a quotation of the appropriate paragraphs of 35 U.S.C. 102 that form the basis for the rejections under this section made in this Office action:

> A person shall be entitled to a patent unless –
>
> (b) the invention was patented or described in a printed publication in this or a foreign country or in public use or on sale in this country, more than one year prior to the date of application for patent in the United States.

Claims 19-20 are rejected under 35 U.S.C. 102(b) as being anticipated by Tsuei ("Tsuei", US 2009/0285383).

As per claim 19, Tsuei teaches a non-transitory computer readable medium storing computer program code which, when executed by a mobile handheld device that has a touch sensitive display, instructs the device (i) to display a notification of an incoming phone call (Figure 2, see Figure 3 step s310), and (ii) to accept the call in response to a multi-step operation comprising an object touching the touch sensitive

display, and the object gliding along the touch sensitive display in a specific direction (Figure 3 step S320, S340,S350, S380) .

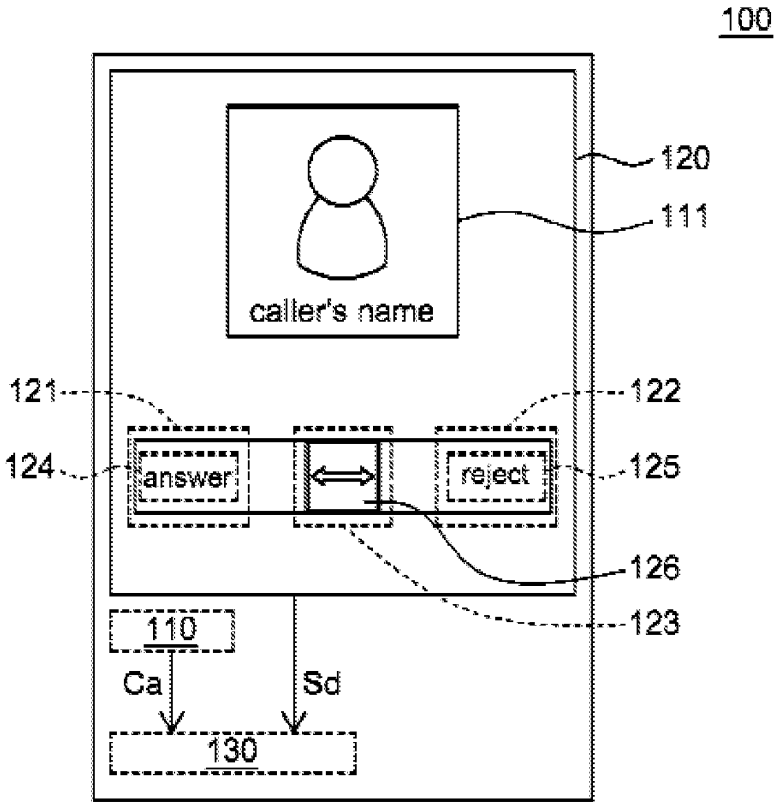

FIG. 2

As per claim 20, Tsuei teaches the computer readable medium of claim 19, wherein the program code instructs the device (iii) to disconnect the call in response to a multi-step operation comprising an object touching the touch sensitive area, and the

object gliding the object along the touch sensitive display in a direction opposite to the specific direction (Figure 3 Step S330, S360, S370, S390).

> (e) the invention was described in (1) an application for patent, published under section 122(b), by another filed in the United States before the invention by the applicant for patent or (2) a patent granted on an application for patent by another filed in the United States before the invention by the applicant for patent, except that an international application filed under the treaty defined in section 351(a) shall have the effects for purposes of this subsection of an application filed in the United States only if the international application designated the United States and was published under Article 21(2) of such treaty in the English language.

Claims 28-30 are rejected under 35 U.S.C. 102(e) as being anticipated by Ausems et al ("Ausems", US 2003/0013483).

As per claim 28, Ausems teaches a computer readable medium storing computer program code, which, when executed by a mobile handheld device having a touch sensitive display, instructs the device (i) to display a list of files of a first type, and (ii) to change the list to display files of a second type in response to a tap on the display (Figure 6-7, [0076] In this example, assume the user selected the "All" application group from menu 196. In response, the corresponding All Applications folder opened in a window 202 on display 106. These folders display images taken from icons associated with the applications that make up the group. The images can be selected and used to launch the associated application programs as is commonly done using icons.)

As per claim 29, Ausems teaches a computer readable medium of claim 28, wherein the computer program code instructs the device to (iii) display a representation of a file type, and wherein the device changes the list in response to a tap on the

representation of the file type (Figure 6, wherein a user selection of applications, games, my files, system will display icons for each corresponding group).

As per claim 30, Ausems teaches a computer readable medium of claim 28, wherein the files of the first type are data files, and the files of the second type are application files (Figure 6, My files, applications).

Claim Rejections - 35 USC § 103

The following is a quotation of 35 U.S.C. 103(a) which forms the basis for all obviousness rejections set forth in this Office action:

> (a) A patent may not be obtained though the invention is not identically disclosed or described as set forth in section 102 of this title, if the differences between the subject matter sought to be patented and the prior art are such that the subject matter as a whole would have been obvious at the time the invention was made to a person having ordinary skill in the art to which said subject matter pertains. Patentability shall not be negatived by the manner in which the invention was made.

Claims 21-26 are rejected under 35 U.S.C. 103(a) as being unpatentable over Pogue (“Pogue”, Palm Pilot: The Ultimate Guide) in view of Gough et al ("Gough", US 5,603,053).

As per claim 21, Pogue teaches a computer readable medium storing computer program code, which, when executed by a mobile handheld device that has a touch sensitive display, instructs the device (i) to display a representation of a function in the touch sensitive display (Page 47, bring up the applications screen by tapping the silkscreened Applications icon), (ii) to display a plurality of icons in the touch sensitive display, each icon representing an application, in response to a multi-step operation comprising an object touching the touch sensitive display at a location where the function representation is displayed (See Figure 2.35 and Figure 2.36), and (iii) to activate one of the applications in response to a tap on its icon (Page 47 Tap a program's name or icon to launch it).

Pogue teaches touch a location and gliding away to activate a feature (Figure 2.22), but fails to disclose activating a function by touching at a function representation and gliding away from the touch location.

However, Gough teaches activating a function by touching at a function representation and gliding away from the touch location (See Figure 4a-4b, Column 6 lines 29-54).

Therefore it would have been obvious to one of ordinary skill in the art at the time of the invention to combine the teaching of Gough with the medium of Pogue. Motivation to do so would have been to provide a way to ensure that the user intended to activate the function.

As per claim 22, Pogue teaches the computer readable medium of claim 21, wherein the plurality of applications includes a lock device application (Figure 2.35 Security).

As per claim 23, Pogue teaches the computer readable medium of claim 21, wherein the plurality of applications includes an alarm clock application (Figure 2.36 Alarm Hack).

As per claim 24, Pogue teaches the computer readable medium of claim 21, wherein the device comprises a clock, wherein the plurality of applications includes an application for setting the time for the clock (Figure 2.35 FPS Clock2).

As per claim 25, Pogue teaches the computer readable medium of claim 21, wherein the plurality of applications includes an application for configuring a background picture for the touch sensitive display (Figure 2.35 Preferences).

As per claim 26, Pogue fails to point out teaching a help application. However, OFFICIAL NOTICE is taken that a help app is notoriously well known in the art at the time of the invention and it would have been obvious to combine the teaching with the medium of Pogue. Motivation to do so would have been to assist new users in the event they are unsure of how to operate the device.

Claims 27 are rejected under 35 U.S.C. 103(a) as being unpatentable over Pogue (“Pogue”, Palm Pilot: The Ultimate Guide) in view of Gough et al ("Gough", US 5,603,053) in view of De Greef et al ("De Greef", US 6,549,217).

As per claim 27, Pogue fails to point out multiple users and configuring applications for each user. However, De Greef teaches computer readable medium of claim 21, wherein the device is alternately used by at least two users, and wherein the plurality of applications includes an application for configuring the unit for each user (Abstract, computer readable media containing software for saving multiple profiles. A saved profile indicates the arrangement of the users display devices available, including type, position, and size of open windows, as well as other of the user's preference parameters).

Therefore it would have been obvious to one of ordinary skill in the art at the time of the invention to combine the teaching of De Greef with the medium of Pogue. Motivation to do so would have been to allow for multiple users to utilize a single system while maintaining their preferences.

Claims 31-32,35-36 are rejected under 35 U.S.C. 103(a) as being unpatentable over Kraft et al (“Kraft”, US 2003/0095102) in view of Liao (“Liao”, US 2004/0021681) .

As per claim 31, Kraft teaches a computer readable medium storing computer program code, which, when executed by a mobile handheld device that has a touch sensitive display, instructs the device to (i) to display a data input keypad for a user to enter data (Figure 7, wherein user has entered a number), and to display a text field for entered data (Figure 7 item 51), (ii) to display representations of a plurality of applications (Figure 7 item 56 and 57), and (iii) to activate one of the applications and to have the application use the entered data, in response to a tap on its representation (Figure 7 item 56, wherein activation of the call soft-key will execute a call application. See also [0028] pass data strings directly to another client or application including phone book, notepad, calendar, internet)).

Kraft fails to teach the mobile handheld device being a touch sensitive display. However, Liao teaches a mobile handheld device having a touch sensitive display for entering keypad input data (Figure 6, [0011] the computer input user interface is selectable by the user from a plurality of input methods such as virtual keyboard...).

Therefore it would have been obvious to one of ordinary skill in the art at the time of the invention to combine the teaching of Liao with the medium of Kraft. Motivation to so would have been to eliminate hardware buttons that can fail after a certain number of actuations, and to give the device a cleaner look.

As per claim 32, Kraft teaches a computer readable medium of claim 31, wherein the plurality of applications includes a telephone application that uses the entered data

as a telephone number (Figure 7 item 56, wherein activation of the call soft-key will execute a call application).

As per claim 35, Liao teaches the computer readable medium of claim 33, wherein the text messaging application is an e-mail application ([0006] email functions).

As per claim 36, Kraft teaches a computer readable medium of claim 31, wherein the plurality of applications includes a contact list application that stores the entered data as retrievable contact information (Figure 7 item 56, wherein activation of the call soft-key will execute a call application. See also [0028] pass data strings directly to another client or application including phone book, notepad, calendar, internet)).

Claims 33-34 are rejected under 35 U.S.C. 103(a) as being unpatentable over Kraft et al (“Kraft”, US 2003/0095102) in view of Liao (“Liao”, US 2004/0021681) in view of Williams (“Williams”, US 7,155,683).

As per claim 33, Kraft fails to distinctly point out options including text messaging. However, Williams teaches the computer readable medium of claim 31, wherein the plurality of applications includes a text messaging application that uses the entered data as a text message (Column 5 lines 50-67, options softkey the user is offered a list of actions as “Send the text as an SMS”).

Therefore it would have been obvious to one of ordinary skill in the art at the time of the invention to combine the teaching of Williams with the medium of Kraft-Liao. Motivation to do so would have been to provide a quick and easy method to send a user a sms message.

As per claim 34, Kraft-Williams teaches the computer readable medium of claim 33, wherein the text messaging application is a short messaging service (SMS) application (Williams, Column 5 lines 50-67, options softkey the user is offered a list of actions as “Send the text as an SMS”).

Conclusion

Any inquiry concerning this communication or earlier communications from the examiner should be directed to RYAN PITARO whose telephone number is (571)272-4071. The examiner can normally be reached on 9:00am - 5:30pm Mondays through Fridays.

If attempts to reach the examiner by telephone are unsuccessful, the examiner’s supervisor, Matt Kim can be reached on 571-272-4182. The fax phone number for the organization where this application or proceeding is assigned is 571-273-8300.

Information regarding the status of an application may be obtained from the Patent Application Information Retrieval (PAIR) system. Status information for published applications may be obtained from either Private PAIR or Public PAIR. Status information for unpublished applications is available through Private PAIR only. For more information about the PAIR system, see http://pair-direct.uspto.gov. Should you have questions on access to the Private PAIR system, contact the Electronic Business Center (EBC) at 866-217-9197 (toll-free). If you would like assistance from a USPTO Customer Service Representative or access to the automated information system, call 800-786-9199 (IN USA OR CANADA) or 571-272-1000.

/Ryan F Pitaro/
Primary Examiner, Art Unit 2171

Notice of References Cited	Application/Control No. 13/310,755	Applicant(s)/Patent Under Reexamination GOERTZ, MAGNUS	
	Examiner RYAN PITARO	Art Unit 2171	Page 1 of 1

U.S. PATENT DOCUMENTS

*		Document Number Country Code-Number-Kind Code	Date MM-YYYY	Name	Classification
*	A	US-5,603,053 A	02-1997	Gough et al.	710/5
*	B	US-2002/0173300 A1	11-2002	Shtivelman et al.	455/418
*	C	US-2002/0191029 A1	12-2002	Gillespie et al.	345/810
*	D	US-2003/0013483 A1	01-2003	Ausems et al.	455/556
*	E	US-6,549,217 B1	04-2003	De Greef et al.	715/745
*	F	US-2003/0095102 A1	05-2003	Kraft et al.	345/168
*	G	US-2004/0021681 A1	02-2004	Liao, Chin-Hua Arthur	345/702
*	H	US-6,757,002 B1	06-2004	Oross et al.	715/864
*	I	US-7,007,239 B1	02-2006	Hawkins et al.	715/780
*	J	US-7,155,683 B1	12-2006	Williams, Stephen	715/816
*	K	US-7,283,845 B2	10-2007	De Bast, Christopher	455/566
*	L	US-2009/0285383 A1	11-2009	Tsuei, Yuan-Mao	379/242
	M	US-			

FOREIGN PATENT DOCUMENTS

*		Document Number Country Code-Number-Kind Code	Date MM-YYYY	Country	Name	Classification
	N					
	O					
	P					
	Q					
	R					
	S					
	T					

NON-PATENT DOCUMENTS

*		Include as applicable: Author, Title Date, Publisher, Edition or Volume, Pertinent Pages)
	U	
	V	
	W	
	X	

*A copy of this reference is not being furnished with this Office action. (See MPEP § 707.05(a).)
Dates in MM-YYYY format are publication dates. Classifications may be US or foreign.

EAST Search History

EAST Search History (Prior Art)

Ref #	Hits	Search Query	DBs	Default Operator	Plurals	Time Stamp
L1	0	lock with help with clock with setting	USPAT	OR	ON	2012/05/03 21:16
L2	1	"6346935".pn.	USPAT	OR	ON	2012/05/03 21:17
L3	6	"20040021643"	US-PGPUB; USPAT; EPO; JPO; DERWENT; IBM_TDB	OR	ON	2012/05/03 21:18
L4	2	"20020027549"	US-PGPUB; USPAT; EPO; JPO; DERWENT; IBM_TDB	OR	ON	2012/05/03 21:19
L5	0	profile with application with each with user	US-PGPUB; USPAT; EPO; JPO; DERWENT; IBM_TDB	OR	ON	2012/05/03 21:47
L6	16148	profile with application with user	US-PGPUB; USPAT; EPO; JPO; DERWENT; IBM_TDB	OR	ON	2012/05/03 21:47
L7	339	profile with application with multiple near3 user	US-PGPUB; USPAT; EPO; JPO; DERWENT; IBM_TDB	OR	ON	2012/05/03 21:47
L8	43	profile with application with multiple near3 user and "715"/$.ccls.	US-PGPUB; USPAT; EPO; JPO; DERWENT; IBM_TDB	OR	ON	2012/05/03 21:47
L9	1	profile with icons with multiple near3 user and "715"/$.ccls.	US-PGPUB; USPAT; EPO; JPO; DERWENT; IBM_TDB	OR	ON	2012/05/03 21:51
L10	38	(application software program apps widgets) with multiple near3 user near3 profile and "715"/$.ccls.	US-PGPUB; USPAT; EPO; JPO; DERWENT; IBM_TDB	OR	ON	2012/05/03 21:52
L11	2	"5914709".pn.	US-PGPUB; USPAT; EPO; JPO; DERWENT; IBM_TDB	OR	ON	2012/05/03 22:05

L12	2	"6292179".pn.	US-PGPUB; USPAT; EPO; JPO; DERWENT; IBM_TDB	OR	ON	2012/05/03 22:05
L13	2	"5618232".pn.	US-PGPUB; USPAT; EPO; JPO; DERWENT; IBM_TDB	OR	ON	2012/05/03 22:06
L14	2	"20050253818"	US-PGPUB; USPAT; EPO; JPO; DERWENT; IBM_TDB	OR	ON	2012/05/03 22:06
L15	2	"7030861".pn.	US-PGPUB; USPAT; EPO; JPO; DERWENT; IBM_TDB	OR	ON	2012/05/03 22:07
L16	2	"5603053".pn.	US-PGPUB; USPAT; EPO; JPO; DERWENT; IBM_TDB	OR	ON	2012/05/03 22:07
S1	2	"20080201637"	US-PGPUB; USPAT; EPO; DERWENT; IBM_TDB	OR	ON	2012/05/02 19:01
S2	2	"8015494"	US-PGPUB; USPAT; EPO; DERWENT; IBM_TDB	OR	ON	2012/05/02 19:14
S3	7	widget with combin$7 with clock	US-PGPUB; USPAT; EPO; DERWENT; IBM_TDB	OR	ON	2012/05/02 19:19
S4	4	"2008023528"	US-PGPUB; USPAT; EPO; DERWENT; IBM_TDB	OR	ON	2012/05/02 22:10
S5	2	"20080235285"	US-PGPUB; USPAT; EPO; DERWENT; IBM_TDB	OR	ON	2012/05/02 22:11
S6	4	slide with answer with (hang disconnect)	US-PGPUB; USPAT; EPO; DERWENT; IBM_TDB	OR	ON	2012/05/03 12:30
S7	500	slide with answer	US-PGPUB; USPAT; EPO; DERWENT; IBM_TDB	OR	ON	2012/05/03 12:30

S8	54	slide with answer and "715"/$.ccls.	US-PGPUB; USPAT; EPO; DERWENT; IBM_TDB	OR	ON	2012/05/03 12:30
S9	0	swipe with answer and "715"/$.ccls.	US-PGPUB; USPAT; EPO; DERWENT; IBM_TDB	OR	ON	2012/05/03 12:33
S10	2	"20120052920"	US-PGPUB; USPAT; EPO; DERWENT; IBM_TDB	OR	ON	2012/05/03 12:35
S11	2	answer with ignore with (slide swipe glide)	US-PGPUB; USPAT; EPO; DERWENT; IBM_TDB	OR	ON	2012/05/03 12:43
S12	7555	(keypad keyboard) with (input entry) with (mobile telephone phone) and @ay<="2002"	US-PGPUB; USPAT; EPO; DERWENT; IBM_TDB	OR	ON	2012/05/03 12:53
S13	348	(keypad keyboard) with (input entry) with (mobile telephone phone) and @ay<="2002" and "715"/$.ccls.	US-PGPUB; USPAT; EPO; DERWENT; IBM_TDB	OR	ON	2012/05/03 12:53
S14	263	(keypad keyboard) with (input entry) with (mobile telephone phone) and @ay<="2001" and "715"/$.ccls.	US-PGPUB; USPAT; EPO; DERWENT; IBM_TDB	OR	ON	2012/05/03 12:53
S15	71	(keypad keyboard) with (input entry) with (mobile telephone phone) with (number sms text) and @ay<="2001" and "715"/$.ccls.	US-PGPUB; USPAT; EPO; DERWENT; IBM_TDB	OR	ON	2012/05/03 12:54
S16	3	(touch virtual) near2(keypad keyboard) with (input entry) with (mobile telephone phone) with (number sms text) and @ay<="2001" and "715"/$.ccls.	US-PGPUB; USPAT; EPO; DERWENT; IBM_TDB	OR	ON	2012/05/03 12:54
S17	10	(touch virtual) near2(keypad keyboard) with (input entry) with (mobile telephone phone) and @ay<="2001" and "715"/$.ccls.	US-PGPUB; USPAT; EPO; DERWENT; IBM_TDB	OR	ON	2012/05/03 12:55
S18	18	(touch virtual) near2(keypad keyboard) with (input entry) with (mobile telephone phone) and @ay<="2002" and "715"/$.ccls.	US-PGPUB; USPAT; EPO; DERWENT; IBM_TDB	OR	ON	2012/05/03 12:56
S19	12	("20060088216" | "4763356" | "5159664" | "5363481" | "5500923" | "5974161" | "6084598" | "6243071" | "6424357" | "6791537" | "6810272" | "6944472").PN.	US-PGPUB; USPAT; USOCR	OR	ON	2012/05/03 12:57
S20	13	("4972496" | "5157783" | "5199104" |	US-PGPUB;	OR	ON	2012/05/03

		"5237651" | "5283864" | "5341293" | "5347295" | "5367453" | "5377281" | "5390281" | "5392387" | "5398310" | "5404442").PN.	USPAT; USOCR			12:58
S21	2038	(smartphone (smart near phone)) and @ay<="2002"	US-PGPUB; USPAT; USOCR	OR	ON	2012/05/03 12:59
S22	88	(smartphone (smart near phone)) and @ay<="2002" and (touch virtual) near (keypad keyboard)	US-PGPUB; USPAT; USOCR	OR	ON	2012/05/03 13:00
S23	12	(smartphone (smart near phone)) and @ay<="2002" and (touch virtual) near (keypad keyboard) and sms	US-PGPUB; USPAT; USOCR	OR	ON	2012/05/03 13:01
S24	183	@ay<="2002" and (touch virtual) near (keypad keyboard) and sms	US-PGPUB; USPAT; USOCR	OR	ON	2012/05/03 13:03
S25	5	@ay<="2002" and (touch virtual) near (keypad keyboard) with sms	US-PGPUB; USPAT; USOCR	OR	ON	2012/05/03 13:04
S26	48	@ay<="2002" and (touch virtual) near (keypad keyboard) and sms with phone	US-PGPUB; USPAT; USOCR	OR	ON	2012/05/03 13:04
S27	185	save near4 text with application	US-PGPUB; USPAT; USOCR	OR	ON	2012/05/03 13:11
S28	52	save near4 text with application and @ay<="2002"	US-PGPUB; USPAT; USOCR	OR	ON	2012/05/03 13:12
S29	0	save near4 (string text) with application with (phone sms email) and @ay<="2002"	US-PGPUB; USPAT; USOCR	OR	ON	2012/05/03 13:13
S30	14	save near4 (string text) with (phone sms email) and @ay<="2002"	US-PGPUB; USPAT; USOCR	OR	ON	2012/05/03 13:13
S31	198	(string text) near input with (phone sms email) and @ay<="2002"	US-PGPUB; USPAT; USOCR	OR	ON	2012/05/03 13:15
S32	272	(string text) near2 input with (phone sms email) and @ay<="2002"	US-PGPUB; USPAT; USOCR	OR	ON	2012/05/03 13:16
S33	0	(string text) near2 input with execute with (phone sms email) and @ay<="2002"	US-PGPUB; USPAT; USOCR	OR	ON	2012/05/03 13:16
S34	16	(string text) near2 input with application with (phone sms email) and @ay<="2002"	US-PGPUB; USPAT; USOCR	OR	ON	2012/05/03 13:16
S35	6	(string text) near2 input with option with (phone call sms email) and @ay<="2002"	US-PGPUB; USPAT; USOCR	OR	ON	2012/05/03 13:19
S36	412	(string text) with option with (phone call sms email) and @ay<="2002"	US-PGPUB; USPAT; USOCR	OR	ON	2012/05/03 13:20
S37	43	(string text) with option with (phone call sms email) and @ay<="2002" and "715"/$.ccls.	US-PGPUB; USPAT; USOCR	OR	ON	2012/05/03 13:20
S38	99	(number) with option with (phone call sms email contact) and @ay<="2002"	US-PGPUB; USPAT;	OR	ON	2012/05/03 13:22

		and "715"/$.ccls.	USOCR			
S39	2	input near(number) with option with (phone call sms email contact) and @ay<="2002" and "715"/$.ccls.	US-PGPUB; USPAT; USOCR	OR	ON	2012/05/03 13:23
S40	105	input near3 (number) with (phone call sms email contact) and @ay<="2002" and "715"/$.ccls.	US-PGPUB; USPAT; USOCR	OR	ON	2012/05/03 13:25
S41	8	input near3 (number) with option with (phone call sms email contact) and @ay<="2002" and "715"/$.ccls.	US-PGPUB; USPAT; USOCR	OR	ON	2012/05/03 13:25
S42	5	field with (number) with option with (phone call sms email contact) and @ay<="2002" and "715"/$.ccls.	US-PGPUB; USPAT; USOCR	OR	ON	2012/05/03 13:26
S43	99	(number) with option with (phone call sms email contact) and @ay<="2002" and "715"/$.ccls.	US-PGPUB; USPAT; USOCR	OR	ON	2012/05/03 13:27
S44	11	(number) with option with list with (phone call sms email contact) and @ay<="2002" and "715"/$.ccls.	US-PGPUB; USPAT; USOCR	OR	ON	2012/05/03 13:27
S45	0	file near type with switch with (touch tap) and @ay<="2002"	US-PGPUB; USPAT; EPO; DERWENT; IBM_TDB	OR	ON	2012/05/03 14:07
S46	2202	type with switch with (touch tap) and @ay<="2002"	US-PGPUB; USPAT; EPO; DERWENT; IBM_TDB	OR	ON	2012/05/03 14:07
S47	57	(application file app icon) with type with switch with (touch tap) and @ay<="2002"	US-PGPUB; USPAT; EPO; DERWENT; IBM_TDB	OR	ON	2012/05/03 14:07
S48	46	(application file app icon) near switch with (touch tap) and @ay<="2002"	US-PGPUB; USPAT; EPO; DERWENT; IBM_TDB	OR	ON	2012/05/03 14:08
S49	39263	(application file app icon) with (second near2 (set subset)) switch with (touch tap) and @ay<="2002"	US-PGPUB; USPAT; EPO; DERWENT; IBM_TDB	OR	ON	2012/05/03 14:09
S50	13	(application file app icon) with (second near2 (set subset)) with (touch tap) and @ay<="2002"	US-PGPUB; USPAT; EPO; DERWENT; IBM_TDB	OR	ON	2012/05/03 14:09
S51	505	(application) with data with (second near2 (set subset)) and @ay<="2002"	US-PGPUB; USPAT; EPO; DERWENT; IBM_TDB	OR	ON	2012/05/03 14:13
S52	8	(application) with data with (second near2 (set subset)) with (switch) and @ay<="2002"	US-PGPUB; USPAT; EPO; DERWENT; IBM_TDB	OR	ON	2012/05/03 14:13

S53	0	(application) with data with (second near2 (set subset)) with (toggle) and @ay<="2002"	US-PGPUB; USPAT; EPO; DERWENT; IBM_TDB	OR	ON	2012/05/03 14:14
S54	41014	file near type (second near2 (set subset)) with (toggle) and @ay<="2002"	US-PGPUB; USPAT; EPO; DERWENT; IBM_TDB	OR	ON	2012/05/03 14:14
S55	0	file near type with (second near2 (set subset)) with (toggle) and @ay<="2002"	US-PGPUB; USPAT; EPO; DERWENT; IBM_TDB	OR	ON	2012/05/03 14:14
S56	2	file near type with (toggle) and @ay<="2002"	US-PGPUB; USPAT; EPO; DERWENT; IBM_TDB	OR	ON	2012/05/03 14:14
S57	44	file near type with (switch) and @ay<="2002"	US-PGPUB; USPAT; EPO; DERWENT; IBM_TDB	OR	ON	2012/05/03 14:15
S58	3	"20080120576"	US-PGPUB; USPAT; EPO; DERWENT; IBM_TDB	OR	ON	2012/05/03 17:57
S59	2	"20080198178"	US-PGPUB; USPAT; EPO; DERWENT; IBM_TDB	OR	ON	2012/05/03 18:00
S60	42	zoom with circ$8 with boundary	US-PGPUB; USPAT; EPO; DERWENT; IBM_TDB	OR	ON	2012/05/03 18:01
S61	22	zoom with circ$8 with boundary and @ay<="2001"	US-PGPUB; USPAT; EPO; DERWENT; IBM_TDB	OR	ON	2012/05/03 18:01
S62	26	zoom with circ$8 with boundary and @ay<="2003"	US-PGPUB; USPAT; EPO; DERWENT; IBM_TDB	OR	ON	2012/05/03 18:01
S63	0	zoom$7 with circ$8 with boundary and @ay<="2003" and "715"/$.ccls.	US-PGPUB; USPAT; EPO; DERWENT; IBM_TDB	OR	ON	2012/05/03 18:01
S64	0	zoom$7 with clockwise with boundary and @ay<="2003" and "715"/$.ccls.	US-PGPUB; USPAT; EPO; DERWENT; IBM_TDB	OR	ON	2012/05/03 18:02

S65	0	zoom$7 with clockwise same boundary and @ay<="2003" and "715"/$.ccls.	US-PGPUB; USPAT; EPO; DERWENT; IBM_TDB	OR	ON	2012/05/03 18:02
S66	2	zoom$7 with circ$7 same boundary and @ay<="2003" and "715"/$.ccls.	US-PGPUB; USPAT; EPO; DERWENT; IBM_TDB	OR	ON	2012/05/03 18:02
S67	5	zoom$7 with (clockwise radial circ$7) same2 (perimter boundary) and @ay<="2003" and "715"/$.ccls.	US-PGPUB; USPAT; EPO; DERWENT; IBM_TDB	OR	ON	2012/05/03 18:04
S68	26	("20010009428" | "20020085037" | "20020101458" | "20020122072" | "20040021647" | "4931783" | "5276795" | "5581670" | "5627960" | "5634064" | "5638523" | "5666499" | "5689667" | "5760773" | "5798752" | "6037937" | "6097387" | "6118427" | "6246411" | "6262719" | "6369837" | "6549219" | "6865719" | "6918091" | "6938221" | "7058902").PN.	US-PGPUB; USPAT; USOCR	OR	ON	2012/05/03 18:05
S69	110	("5638523").URPN.	USPAT	OR	ON	2012/05/03 18:06

EAST Search History (Interference)

< This search history is empty>

5/3/2012 10:24:54 PM
C:\Users\rpitaro\Documents\EAST\Workspaces\13310755.wsp

PTO/SB/08a (01-10)
Approved for use through 07/31/2012. OMB 0651-0031
U.S. Patent and Trademark Office; U.S. DEPARTMENT OF COMMERCE
Under the Paperwork Reduction Act of 1995, no persons are required to respond to a collection of information unless it contains a valid OMB control number.

INFORMATION DISCLOSURE STATEMENT BY APPLICANT
(Not for submission under 37 CFR 1.99)

Application Number	13/310755
Filing Date	12/4/2011
First Named Inventor	Magnus Goertz
Art Unit	2171
Examiner Name	Ryan Pitaro
Attorney Docket Number	NEONODE.P039

U.S.PATENTS Remove

Examiner Initial*	Cite No	Patent Number	Kind Code[1]	Issue Date	Name of Patentee or Applicant of cited Document	Pages,Columns,Lines where Relevant Passages or Relevant Figures Appear
/R.P./	1	5053758	B1	1991-10-01	Cornett et al.	
	2	7159763	B2	2007-01-09	Yap et al.	
	3	7006077	B1	2006-02-28	Uusimaki	
	4	6597345	B2	2003-07-22	Hirshberg	
	5	6639584	B1	2003-10-28	Li	
	6	7225408	B2	2007-05-29	O'Rourke	
	7	6346935	B1	2002-02-12	Nakajima et al.	
	8	6085204	B1	2000-07-04	Chijiwa et al.	

INFORMATION DISCLOSURE STATEMENT BY APPLICANT (Not for submission under 37 CFR 1.99)		
	Application Number	
	Filing Date	
	First Named Inventor	Magnus Goertz
	Art Unit	
	Examiner Name	
	Attorney Docket Number	NEONODE.P039

/R.P./	9	7286063	B2	2007-10-23	Gauthey et al.	
	10	5956030	B1	1999-09-21	Conrad et al.	
	11	5900875	B1	1999-05-04	Haitani et al.	
	12	6988246	B2	2006-01-17	Kopitzke et al.	
	13	6727917	B1	2004-04-27	Chew et al.	
	14	6734883	B1	2004-05-11	Wynn et al.	
	15	6052279	B1	2000-04-18	Friend et al.	
	16	6542191	B1	2003-04-01	Yonezawa	
	17	6833827	B2	2004-12-21	Lui et al.	
	18	5406307	B1	1995-04-11	Hirayama et al.	
	19	7030861	B1	2006-04-18	Westerman et al.	

INFORMATION DISCLOSURE STATEMENT BY APPLICANT (Not for submission under 37 CFR 1.99)		
	Application Number	
	Filing Date	
	First Named Inventor	Magnus Goertz
	Art Unit	
	Examiner Name	
	Attorney Docket Number	NEONODE.P039

/R.P./	20	5603053	B1	1997-02-11	Gough et al.	
	21	7880724	B2	2011-02-01	Nguyen et al.	
	22	4790028	B1	1988-12-06	Ramage	
	23	5283558	B1	1994-02-01	Chan	
	24	5988645	B1	1999-11-23	Downing	
	25	5577733	B1	1996-11-26	Downing	
	26	4243879	B1	1981-01-06	Carroll et al.	
	27	5036187	B1	1991-07-30	Yoshida et al.	
	28	5194863	B1	1993-03-16	Barker et al.	
	29	5825352	B1	1998-10-20	Bisset et al.	
	30	4301447	B1	1981-11-17	Funk et al.	

INFORMATION DISCLOSURE STATEMENT BY APPLICANT (Not for submission under 37 CFR 1.99)		
	Application Number	
	Filing Date	
	First Named Inventor	Magnus Goertz
	Art Unit	
	Examiner Name	
	Attorney Docket Number	NEONODE.P039

If you wish to add additional U.S. Patent citation information please click the Add button. Add

U.S.PATENT APPLICATION PUBLICATIONS Remove

Examiner Initial*	Cite No	Publication Number	Kind Code[1]	Publication Date	Name of Patentee or Applicant of cited Document	Pages,Columns,Lines where Relevant Passages or Relevant Figures Appear
/R.P./	1	20020027549	A1	2002-03-07	Hirshberg	
	2	20040021643	A1	2004-02-05	Hoshino et al.	
	3	20050035956	A1	2005-02-17	Sinclair et al.	
	4	20020171691	A1	2002-11-21	Currans et al.	
	5	20040100510	A1	2004-05-27	Milic-Frayling et al.	
	6	20020046353	A1	2002-04-18	Kishimoto	
	7	20020002326	A1	2002-01-03	Causey, III et al.	
	8	20010002694	A1	2001-06-07	Nakazawa et al.	
	9	20010022579	A1	2001-09-20	Hirabayashi	

INFORMATION DISCLOSURE STATEMENT BY APPLICANT (Not for submission under 37 CFR 1.99)		
	Application Number	
	Filing Date	
	First Named Inventor	Magnus Goertz
	Art Unit	
	Examiner Name	
	Attorney Docket Number	NEONODE.P039

/R.P./	10	20010026268	A1	2001-10-04	Ito	
/R.P./	11	20010028344	A1	2001-10-11	Iwamoto et al.	
/R.P./	12	20010055006	A1	2001-12-27	Sano et al.	

If you wish to add additional U.S. Published Application citation information please click the Add button. Add

FOREIGN PATENT DOCUMENTS Remove

Examiner Initial*	Cite No	Foreign Document Number[3]	Country Code[2] ¡	Kind Code[4]	Publication Date	Name of Patentee or Applicant of cited Document	Pages,Columns,Lines where Relevant Passages or Relevant Figures Appear	T[5]
/R.P./	1	0 330 767	EP	B1	1989-09-06	PIONEER ELECTRONIC CORPORATION		☐
/R.P./	2	8600447	WO	A1	1986-01-16	AMP Inc.		☐
/R.P./	3	8600446	WO	A1	1986-01-16	AMP Inc.		☐

If you wish to add additional Foreign Patent Document citation information please click the Add button Add

NON-PATENT LITERATURE DOCUMENTS Remove

Examiner Initials*	Cite No	Include name of the author (in CAPITAL LETTERS), title of the article (when appropriate), title of the item (book, magazine, journal, serial, symposium, catalog, etc), date, pages(s), volume-issue number(s), publisher, city and/or country where published.	T[5]
/R.P./	1	CARLSON, JEFF, Visual Quickstart Guide Palm Organizers. Peachpit Press. 2000. Berkeley, CA. Pages xiii, 12, 25, 26, 28-30, 40, 47, 246 and 253.	☐

INFORMATION DISCLOSURE STATEMENT BY APPLICANT (Not for submission under 37 CFR 1.99)		
	Application Number	
	Filing Date	
	First Named Inventor	Magnus Goertz
	Art Unit	
	Examiner Name	
	Attorney Docket Number	NEONODE.P039

/R.P./	2	STREITELMEIER, JULIE, "Palm m100." The Gadgeteer. 2000. <http://www.the-gadgeteer.com/review/palm_m100_review> pages 1-8.	☐
/R.P./	3	VENOLIA ET AL., "T-Cube: A Fast, Self-Disclosing Pen-Based Alphabet." April 24, 1994. Pages 265-270.	☐
/R.P./	4	DULBERG, ET AL., An Imprecise Mouse Gesture for the Fast Activation of Controls. Interact 1999. Pages 1-8.	☐
/R.P./	5	POGUE, DAVID, Palm Pilot: The Ultimate Guide, 2nd Edition, 1998. O'Reilly and Associates, Inc. Pages 1-17.	☐

If you wish to add additional non-patent literature document citation information please click the Add button **Add**

EXAMINER SIGNATURE

Examiner Signature	/Ryan Pitaro/	Date Considered	05/03/2012

*EXAMINER: Initial if reference considered, whether or not citation is in conformance with MPEP 609. Draw line through a citation if not in conformance and not considered. Include copy of this form with next communication to applicant.

[1] See Kind Codes of USPTO Patent Documents at www.USPTO.GOV or MPEP 901.04. [2] Enter office that issued the document, by the two-letter code (WIPO Standard ST.3). [3] For Japanese patent documents, the indication of the year of the reign of the Emperor must precede the serial number of the patent document. [4] Kind of document by the appropriate symbols as indicated on the document under WIPO Standard ST.16 if possible. [5] Applicant is to place a check mark here if English language translation is attached.

INFORMATION DISCLOSURE STATEMENT BY APPLICANT (Not for submission under 37 CFR 1.99)		
	Application Number	
	Filing Date	
	First Named Inventor	Magnus Goertz
	Art Unit	
	Examiner Name	
	Attorney Docket Number	NEONODE.P039

CERTIFICATION STATEMENT

Please see 37 CFR 1.97 and 1.98 to make the appropriate selection(s):

☐ That each item of information contained in the information disclosure statement was first cited in any communication from a foreign patent office in a counterpart foreign application not more than three months prior to the filing of the information disclosure statement. See 37 CFR 1.97(e)(1).

OR

☐ That no item of information contained in the information disclosure statement was cited in a communication from a foreign patent office in a counterpart foreign application, and, to the knowledge of the person signing the certification after making reasonable inquiry, no item of information contained in the information disclosure statement was known to any individual designated in 37 CFR 1.56(c) more than three months prior to the filing of the information disclosure statement. See 37 CFR 1.97(e)(2).

☐ See attached certification statement.

☐ The fee set forth in 37 CFR 1.17 (p) has been submitted herewith.

☒ A certification statement is not submitted herewith.

SIGNATURE

A signature of the applicant or representative is required in accordance with CFR 1.33, 10.18. Please see CFR 1.4(d) for the form of the signature.

Signature	/Marc A. Berger/	Date (YYYY-MM-DD)	2011-12-04
Name/Print	Marc A. Berger	Registration Number	44029

This collection of information is required by 37 CFR 1.97 and 1.98. The information is required to obtain or retain a benefit by the public which is to file (and by the USPTO to process) an application. Confidentiality is governed by 35 U.S.C. 122 and 37 CFR 1.14. This collection is estimated to take 1 hour to complete, including gathering, preparing and submitting the completed application form to the USPTO. Time will vary depending upon the individual case. Any comments on the amount of time you require to complete this form and/or suggestions for reducing this burden, should be sent to the Chief Information Officer, U.S. Patent and Trademark Office, U.S. Department of Commerce, P.O. Box 1450, Alexandria, VA 22313-1450. DO NOT SEND FEES OR COMPLETED FORMS TO THIS ADDRESS. **SEND TO: Commissioner for Patents, P.O. Box 1450, Alexandria, VA 22313-1450.**

Privacy Act Statement

The Privacy Act of 1974 (P.L. 93-579) requires that you be given certain information in connection with your submission of the attached form related to a patent application or patent. Accordingly, pursuant to the requirements of the Act, please be advised that: (1) the general authority for the collection of this information is 35 U.S.C. 2(b)(2); (2) furnishing of the information solicited is voluntary; and (3) the principal purpose for which the information is used by the U.S. Patent and Trademark Office is to process and/or examine your submission related to a patent application or patent. If you do not furnish the requested information, the U.S. Patent and Trademark Office may not be able to process and/or examine your submission, which may result in termination of proceedings or abandonment of the application or expiration of the patent.

The information provided by you in this form will be subject to the following routine uses:

1. The information on this form will be treated confidentially to the extent allowed under the Freedom of Information Act (5 U.S.C. 552) and the Privacy Act (5 U.S.C. 552a). Records from this system of records may be disclosed to the Department of Justice to determine whether the Freedom of Information Act requires disclosure of these record s.

2. A record from this system of records may be disclosed, as a routine use, in the course of presenting evidence to a court, magistrate, or administrative tribunal, including disclosures to opposing counsel in the course of settlement negotiations.

3. A record in this system of records may be disclosed, as a routine use, to a Member of Congress submitting a request involving an individual, to whom the record pertains, when the individual has requested assistance from the Member with respect to the subject matter of the record.

4. A record in this system of records may be disclosed, as a routine use, to a contractor of the Agency having need for the information in order to perform a contract. Recipients of information shall be required to comply with the requirements of the Privacy Act of 1974, as amended, pursuant to 5 U.S.C. 552a(m).

5. A record related to an International Application filed under the Patent Cooperation Treaty in this system of records may be disclosed, as a routine use, to the International Bureau of the World Intellectual Property Organization, pursuant to the Patent Cooperation Treaty.

6. A record in this system of records may be disclosed, as a routine use, to another federal agency for purposes of National Security review (35 U.S.C. 181) and for review pursuant to the Atomic Energy Act (42 U.S.C. 218(c)).

7. A record from this system of records may be disclosed, as a routine use, to the Administrator, General Services, or his/her designee, during an inspection of records conducted by GSA as part of that agency's responsibility to recommend improvements in records management practices and programs, under authority of 44 U.S.C. 2904 and 2906. Such disclosure shall be made in accordance with the GSA regulations governing inspection of records for this purpose, and any other relevant (i.e., GSA or Commerce) directive. Such disclosure shall not be used to make determinations about individuals.

8. A record from this system of records may be disclosed, as a routine use, to the public after either publication of the application pursuant to 35 U.S.C. 122(b) or issuance of a patent pursuant to 35 U.S.C. 151. Further, a record may be disclosed, subject to the limitations of 37 CFR 1.14, as a routine use, to the public if the record was filed in an application which became abandoned or in which the proceedings were terminated and which application is referenced by either a published application, an application open to public inspections or an issued patent.

9. A record from this system of records may be disclosed, as a routine use, to a Federal, State, or local law enforcement agency, if the USPTO becomes aware of a violation or potential violation of law or regulation.

Index of Claims	Application/Control No.	Applicant(s)/Patent Under Reexamination
	13310755	GOERTZ, MAGNUS
	Examiner	Art Unit
	RYAN PITARO	2171

✓	Rejected	-	Cancelled	N	Non-Elected	A	Appeal
=	Allowed	÷	Restricted	I	Interference	O	Objected

☐ Claims renumbered in the same order as presented by applicant ☐ CPA ☐ T.D. ☐ R.1.47

CLAIM		DATE								
Final	Original	05/03/2012								
	1	-								
	2	-								
	3	-								
	4	-								
	5	-								
	6	-								
	7	-								
	8	-								
	9	-								
	10	-								
	11	-								
	12	-								
	13	-								
	14	-								
	15	-								
	16	-								
	17	-								
	18	-								
	19	✓								
	20	✓								
	21	✓								
	22	✓								
	23	✓								
	24	✓								
	25	✓								
	26	✓								
	27	✓								
	28	✓								
	29	✓								
	30	✓								
	31	✓								
	32	✓								
	33	✓								
	34	✓								
	35	✓								
	36	✓								

PTO/SB/08a (01-10)
Approved for use through 07/31/2012. OMB 0651-0031
U.S. Patent and Trademark Office; U.S. DEPARTMENT OF COMMERCE

Under the Paperwork Reduction Act of 1995, no persons are required to respond to a collection of information unless it contains a valid OMB control number.

INFORMATION DISCLOSURE STATEMENT BY APPLICANT
(Not for submission under 37 CFR 1.99)

Application Number	13310755
Filing Date	2011-12-04
First Named Inventor	Magnus Goertz
Art Unit	2617
Examiner Name	
Attorney Docket Number	NEONODE.P039

U.S.PATENTS Remove

Examiner Initial*	Cite No	Patent Number	Kind Code[1]	Issue Date	Name of Patentee or Applicant of cited Document	Pages,Columns,Lines where Relevant Passages or Relevant Figures Appear
/R.P./	1	5914709	B1	1999-06-22	Graham et al.	
/R.P./	2	6292179	B1	2001-09-18	Lee	
/R.P./	3	5618232	B1	1997-04-08	Martin	
/R.P./	4	5612719	B1	1997-03-18	Beernink et al.	

If you wish to add additional U.S. Patent citation information please click the Add button. Add

U.S.PATENT APPLICATION PUBLICATIONS Remove

Examiner Initial*	Cite No	Publication Number	Kind Code[1]	Publication Date	Name of Patentee or Applicant of cited Document	Pages,Columns,Lines where Relevant Passages or Relevant Figures Appear
/R.P./	1	20050253818	A1	2005-11-17	Nettamo	

If you wish to add additional U.S. Published Application citation information please click the Add button. Add

FOREIGN PATENT DOCUMENTS Remove

Examiner Initial*	Cite No	Foreign Document Number[3]	Country Code[2] i	Kind Code[4]	Publication Date	Name of Patentee or Applicant of cited Document	Pages,Columns,Lines where Relevant Passages or Relevant Figures Appear	T[5]

INFORMATION DISCLOSURE STATEMENT BY APPLICANT (Not for submission under 37 CFR 1.99)		
	Application Number	13310755
	Filing Date	2011-12-04
	First Named Inventor	Magnus Goertz
	Art Unit	2617
	Examiner Name	
	Attorney Docket Number	NEONODE.P039

/R.P./	1	0703525	EP	A1	1996-03-27	Aisin Aw Co., Ltd.		☐
/R.P./	2	0618528	EP	A1	1994-10-05	International Business Machines Corporation		☐
/R.P./	3	0513694	EP	A2	1992-11-19	Sony Corporation		☐

If you wish to add additional Foreign Patent Document citation information please click the Add button Add

NON-PATENT LITERATURE DOCUMENTS Remove

Examiner Initials*	Cite No	Include name of the author (in CAPITAL LETTERS), title of the article (when appropriate), title of the item (book, magazine, journal, serial, symposium, catalog, etc), date, pages(s), volume-issue number(s), publisher, city and/or country where published.	T[5]
	1		☐

If you wish to add additional non-patent literature document citation information please click the Add button Add

EXAMINER SIGNATURE

Examiner Signature	/Ryan Pitaro/	Date Considered	05/03/2012

*EXAMINER: Initial if reference considered, whether or not citation is in conformance with MPEP 609. Draw line through a citation if not in conformance and not considered. Include copy of this form with next communication to applicant.

[1] See Kind Codes of USPTO Patent Documents at www.USPTO.GOV or MPEP 901.04. [2] Enter office that issued the document, by the two-letter code (WIPO Standard ST.3). [3] For Japanese patent documents, the indication of the year of the reign of the Emperor must precede the serial number of the patent document. [4] Kind of document by the appropriate symbols as indicated on the document under WIPO Standard ST.16 if possible. [5] Applicant is to place a check mark here if English language translation is attached.

INFORMATION DISCLOSURE STATEMENT BY APPLICANT (Not for submission under 37 CFR 1.99)		
	Application Number	13310755
	Filing Date	2011-12-04
	First Named Inventor	Magnus Goertz
	Art Unit	2617
	Examiner Name	
	Attorney Docket Number	NEONODE.P039

CERTIFICATION STATEMENT

Please see 37 CFR 1.97 and 1.98 to make the appropriate selection(s):

☐ That each item of information contained in the information disclosure statement was first cited in any communication from a foreign patent office in a counterpart foreign application not more than three months prior to the filing of the information disclosure statement. See 37 CFR 1.97(e)(1).

OR

☐ That no item of information contained in the information disclosure statement was cited in a communication from a foreign patent office in a counterpart foreign application, and, to the knowledge of the person signing the certification after making reasonable inquiry, no item of information contained in the information disclosure statement was known to any individual designated in 37 CFR 1.56(c) more than three months prior to the filing of the information disclosure statement. See 37 CFR 1.97(e)(2).

☐ See attached certification statement.

☐ The fee set forth in 37 CFR 1.17 (p) has been submitted herewith.

☒ A certification statement is not submitted herewith.

SIGNATURE

A signature of the applicant or representative is required in accordance with CFR 1.33, 10.18. Please see CFR 1.4(d) for the form of the signature.

Signature	/Marc A. Berger/	Date (YYYY-MM-DD)	2012-02-08
Name/Print	Marc A. Berger	Registration Number	44029

This collection of information is required by 37 CFR 1.97 and 1.98. The information is required to obtain or retain a benefit by the public which is to file (and by the USPTO to process) an application. Confidentiality is governed by 35 U.S.C. 122 and 37 CFR 1.14. This collection is estimated to take 1 hour to complete, including gathering, preparing and submitting the completed application form to the USPTO. Time will vary depending upon the individual case. Any comments on the amount of time you require to complete this form and/or suggestions for reducing this burden, should be sent to the Chief Information Officer, U.S. Patent and Trademark Office, U.S. Department of Commerce, P.O. Box 1450, Alexandria, VA 22313-1450. DO NOT SEND FEES OR COMPLETED FORMS TO THIS ADDRESS. **SEND TO: Commissioner for Patents, P.O. Box 1450, Alexandria, VA 22313-1450.**

Privacy Act Statement

The Privacy Act of 1974 (P.L. 93-579) requires that you be given certain information in connection with your submission of the attached form related to a patent application or patent. Accordingly, pursuant to the requirements of the Act, please be advised that: (1) the general authority for the collection of this information is 35 U.S.C. 2(b)(2); (2) furnishing of the information solicited is voluntary; and (3) the principal purpose for which the information is used by the U.S. Patent and Trademark Office is to process and/or examine your submission related to a patent application or patent. If you do not furnish the requested information, the U.S. Patent and Trademark Office may not be able to process and/or examine your submission, which may result in termination of proceedings or abandonment of the application or expiration of the patent.

The information provided by you in this form will be subject to the following routine uses:

1. The information on this form will be treated confidentially to the extent allowed under the Freedom of Information Act (5 U.S.C. 552) and the Privacy Act (5 U.S.C. 552a). Records from this system of records may be disclosed to the Department of Justice to determine whether the Freedom of Information Act requires disclosure of these record s.

2. A record from this system of records may be disclosed, as a routine use, in the course of presenting evidence to a court, magistrate, or administrative tribunal, including disclosures to opposing counsel in the course of settlement negotiations.

3. A record in this system of records may be disclosed, as a routine use, to a Member of Congress submitting a request involving an individual, to whom the record pertains, when the individual has requested assistance from the Member with respect to the subject matter of the record.

4. A record in this system of records may be disclosed, as a routine use, to a contractor of the Agency having need for the information in order to perform a contract. Recipients of information shall be required to comply with the requirements of the Privacy Act of 1974, as amended, pursuant to 5 U.S.C. 552a(m).

5. A record related to an International Application filed under the Patent Cooperation Treaty in this system of records may be disclosed, as a routine use, to the International Bureau of the World Intellectual Property Organization, pursuant to the Patent Cooperation Treaty.

6. A record in this system of records may be disclosed, as a routine use, to another federal agency for purposes of National Security review (35 U.S.C. 181) and for review pursuant to the Atomic Energy Act (42 U.S.C. 218(c)).

7. A record from this system of records may be disclosed, as a routine use, to the Administrator, General Services, or his/her designee, during an inspection of records conducted by GSA as part of that agency's responsibility to recommend improvements in records management practices and programs, under authority of 44 U.S.C. 2904 and 2906. Such disclosure shall be made in accordance with the GSA regulations governing inspection of records for this purpose, and any other relevant (i.e., GSA or Commerce) directive. Such disclosure shall not be used to make determinations about individuals.

8. A record from this system of records may be disclosed, as a routine use, to the public after either publication of the application pursuant to 35 U.S.C. 122(b) or issuance of a patent pursuant to 35 U.S.C. 151. Further, a record may be disclosed, subject to the limitations of 37 CFR 1.14, as a routine use, to the public if the record was filed in an application which became abandoned or in which the proceedings were terminated and which application is referenced by either a published application, an application open to public inspections or an issued patent.

9. A record from this system of records may be disclosed, as a routine use, to a Federal, State, or local law enforcement agency, if the USPTO becomes aware of a violation or potential violation of law or regulation.

Search Notes	Application/Control No.	Applicant(s)/Patent Under Reexamination
	13310755	GOERTZ, MAGNUS
	Examiner	Art Unit
	RYAN PITARO	2171

SEARCHED			
Class	Subclass	Date	Examiner

SEARCH NOTES		
Search Notes	Date	Examiner
EAST	5/3/2012	RFP
Internet	5/3/2012	RFP
Inventor Name	5/3/2012	RFP
IEEE	5/3/2012	RFP

INTERFERENCE SEARCH			
Class	Subclass	Date	Examiner

UNITED STATES PATENT AND TRADEMARK OFFICE

UNITED STATES DEPARTMENT OF COMMERCE
United States Patent and Trademark Office
Address: COMMISSIONER FOR PATENTS
P.O. Box 1450
Alexandria, Virginia 22313-1450
www.uspto.gov

APPLICATION NO.	FILING DATE	FIRST NAMED INVENTOR	ATTORNEY DOCKET NO.	CONFIRMATION NO.
13/310,755	12/04/2011	Magnus Goertz	NEONODE.P039	1066

75660 7590 04/22/2012

Soquel Group, LLC
P.O. Box 691
Soquel, CA 95073

EXAMINER	
PITARO, RYAN F	
ART UNIT	PAPER NUMBER
2171	

NOTIFICATION DATE	DELIVERY MODE
04/22/2012	ELECTRONIC

Please find below and/or attached an Office communication concerning this application or proceeding.

The time period for reply, if any, is set in the attached communication.

Notice of the Office communication was sent electronically on above-indicated "Notification Date" to the following e-mail address(es):

pto@soquelgroup.com
rblumberg@soquelgroup.com
mberger@soquelgroup.com

Doc Code: TRACK1.GRANT

Decision Granting Request for Prioritized Examination (Track I or After RCE)	Application No.:13310755

1. THE REQUEST FILED December 4, 2011 IS **GRANTED.**

The above-identified application has met the requirements for prioritized examination

A. ☒ for an original nonprovisional application (Track I).
B. ☐ for an application undergoing continued examination (RCE).

2. **The above-identified application will undergo prioritized examination.** The application will be accorded special status throughout its entire course of prosecution until one of the following occurs:

A. filing a **petition for extension of time** to extend the time period for filing a reply;
B. filing an **amendment to amend the application to contain more than four independent claims, more than thirty total claims**, or a multiple dependent claim;
C. filing a **request for continued examination**;
D. filing a notice of appeal;
E. filing a request for suspension of action;
F. mailing of a notice of allowance;
G. mailing of a final Office action;
H. completion of examination as defined in 37 CFR 41.102; or
I. abandonment of the application.

Telephone inquiries with regard to this decision should be directed to Kakali Chaki at (571) 272-3719, Mondays – Fridays between 9 am and 5:30 pm. In her absence, calls may be directed to Mano Padmanabhan at (571)272-4210.

/Kakali Chaki/
Supervisory Patent Examiner, Art Unit 2122

UNITED STATES PATENT AND TRADEMARK OFFICE

UNITED STATES DEPARTMENT OF COMMERCE
United States Patent and Trademark Office
Address: COMMISSIONER FOR PATENTS
P.O. Box 1450
Alexandria, Virginia 22313-1450
www.uspto.gov

APPLICATION NUMBER	FILING OR 371(C) DATE	FIRST NAMED APPLICANT	ATTY. DOCKET NO./TITLE
13/310,755	12/04/2011	Magnus Goertz	NEONODE.P039

CONFIRMATION NO. 1066

75660
Soquel Group, LLC
P.O. Box 691
Soquel, CA 95073

PUBLICATION NOTICE

Title:USER INTERFACE

Publication No.US-2012-0094723-A1
Publication Date:04/19/2012

NOTICE OF PUBLICATION OF APPLICATION

The above-identified application will be electronically published as a patent application publication pursuant to 37 CFR 1.211, et seq. The patent application publication number and publication date are set forth above.

The publication may be accessed through the USPTO's publically available Searchable Databases via the Internet at www.uspto.gov. The direct link to access the publication is currently http://www.uspto.gov/patft/.

The publication process established by the Office does not provide for mailing a copy of the publication to applicant. A copy of the publication may be obtained from the Office upon payment of the appropriate fee set forth in 37 CFR 1.19(a)(1). Orders for copies of patent application publications are handled by the USPTO's Office of Public Records. The Office of Public Records can be reached by telephone at (703) 308-9726 or (800) 972-6382, by facsimile at (703) 305-8759, by mail addressed to the United States Patent and Trademark Office, Office of Public Records, Alexandria, VA 22313-1450 or via the Internet.

In addition, information on the status of the application, including the mailing date of Office actions and the dates of receipt of correspondence filed in the Office, may also be accessed via the Internet through the Patent Electronic Business Center at www.uspto.gov using the public side of the Patent Application Information and Retrieval (PAIR) system. The direct link to access this status information is currently http://pair.uspto.gov/. Prior to publication, such status information is confidential and may only be obtained by applicant using the private side of PAIR.

Further assistance in electronically accessing the publication, or about PAIR, is available by calling the Patent Electronic Business Center at 1-866-217-9197.

Office of Data Managment, Application Assistance Unit (571) 272-4000, or (571) 272-4200, or 1-888-786-0101

UNITED STATES PATENT AND TRADEMARK OFFICE

UNITED STATES DEPARTMENT OF COMMERCE
United States Patent and Trademark Office
Address: COMMISSIONER FOR PATENTS
P.O. Box 1450
Alexandria, Virginia 22313-1450
www.uspto.gov

APPLICATION NUMBER	FILING OR 371(C) DATE	FIRST NAMED APPLICANT	ATTY. DOCKET NO./TITLE
13/310,755	12/04/2011	Magnus Goertz	NEONODE.P039

CONFIRMATION NO. 1066

75660
Soquel Group, LLC
P.O. Box 691
Soquel, CA 95073

WITHDRAWAL NOTICE

OC000000053607208

Date Mailed: 04/10/2012

Letter Regarding a New Notice and/or the Status of the Application

If a new notice or Filing Receipt is enclosed, applicant may disregard the previous notice mailed on 01/09/2012. The time period for reply runs from the mail date of the new notice. Within the time period for reply, applicant is required to file a reply in compliance with the requirements set forth in the new notice to avoid abandonment of the application.

Registered users of EFS-Web may alternatively submit their reply to this notice via EFS-Web. https://sportal.uspto.gov/authenticate/AuthenticateUserLocalEPF.html

For more information about EFS-Web please call the USPTO Electronic Business Center at **1-866-217-9197** or visit our website at http://www.uspto.gov/ebc.

If the reply is not filed electronically via EFS-Web, the reply must be accompanied by a copy of the new notice.

If the Office previously granted a petition to withdraw the holding of abandonment or a petition to revive under 37 CFR 1.137, the status of the application has been returned to pending status.

/eggolla/

Office of Data Management, Application Assistance Unit (571) 272-4000, or (571) 272-4200, or 1-888-786-0101

PATENT APPLICATION FEE DETERMINATION RECORD

Substitute for Form PTO-875

Application or Docket Number: 13/310,755

APPLICATION AS FILED - PART I

FOR	(Column 1) NUMBER FILED	(Column 2) NUMBER EXTRA	SMALL ENTITY RATE($)	SMALL ENTITY FEE($)	OR	OTHER THAN SMALL ENTITY RATE($)	OTHER THAN SMALL ENTITY FEE($)
BASIC FEE (37 CFR 1.16(a), (b), or (c))	N/A	N/A	N/A			N/A	380
SEARCH FEE (37 CFR 1.16(k), (i), or (m))	N/A	N/A	N/A			N/A	620
EXAMINATION FEE (37 CFR 1.16(o), (p), or (q))	N/A	N/A	N/A			N/A	250
TOTAL CLAIMS (37 CFR 1.16(i))	18 minus 20 =	*			OR	x 60 =	0.00
INDEPENDENT CLAIMS (37 CFR 1.16(h))	4 minus 3 =	* 1				x 250 =	250
APPLICATION SIZE FEE (37 CFR 1.16(s))	If the specification and drawings exceed 100 sheets of paper, the application size fee due is $310 ($155 for small entity) for each additional 50 sheets or fraction thereof. See 35 U.S.C. 41(a)(1)(G) and 37 CFR 1.16(s).						0.00
MULTIPLE DEPENDENT CLAIM PRESENT (37 CFR 1.16(j))							0.00
* If the difference in column 1 is less than zero, enter "0" in column 2.			TOTAL			TOTAL	1500

APPLICATION AS AMENDED - PART II

		(Column 1) CLAIMS REMAINING AFTER AMENDMENT		(Column 2) HIGHEST NUMBER PREVIOUSLY PAID FOR	(Column 3) PRESENT EXTRA	SMALL ENTITY RATE($)	SMALL ENTITY ADDITIONAL FEE($)	OR	OTHER THAN SMALL ENTITY RATE($)	OTHER THAN SMALL ENTITY ADDITIONAL FEE($)
AMENDMENT A	Total (37 CFR 1.16(i))	*	Minus	**	=	x =		OR	x =	
	Independent (37 CFR 1.16(h))	*	Minus	***	=	x =		OR	x =	
	Application Size Fee (37 CFR 1.16(s))									
	FIRST PRESENTATION OF MULTIPLE DEPENDENT CLAIM (37 CFR 1.16(j))							OR		
						TOTAL ADD'L FEE		OR	TOTAL ADD'L FEE	

		(Column 1) CLAIMS REMAINING AFTER AMENDMENT		(Column 2) HIGHEST NUMBER PREVIOUSLY PAID FOR	(Column 3) PRESENT EXTRA	RATE($)	ADDITIONAL FEE($)	OR	RATE($)	ADDITIONAL FEE($)
AMENDMENT B	Total (37 CFR 1.16(i))	*	Minus	**	=	x =		OR	x =	
	Independent (37 CFR 1.16(h))	*	Minus	***	=	x =		OR	x =	
	Application Size Fee (37 CFR 1.16(s))									
	FIRST PRESENTATION OF MULTIPLE DEPENDENT CLAIM (37 CFR 1.16(j))							OR		
						TOTAL ADD'L FEE		OR	TOTAL ADD'L FEE	

* If the entry in column 1 is less than the entry in column 2, write "0" in column 3.

** If the "Highest Number Previously Paid For" IN THIS SPACE is less than 20, enter "20".

*** If the "Highest Number Previously Paid For" IN THIS SPACE is less than 3, enter "3".

The "Highest Number Previously Paid For" (Total or Independent) is the highest found in the appropriate box in column 1.

UNITED STATES PATENT AND TRADEMARK OFFICE

UNITED STATES DEPARTMENT OF COMMERCE
United States Patent and Trademark Office
Address: COMMISSIONER FOR PATENTS
P.O. Box 1450
Alexandria, Virginia 22313-1450
www.uspto.gov

APPLICATION NUMBER	FILING or 371(c) DATE	GRP ART UNIT	FIL FEE REC'D	ATTY.DOCKET.NO	TOT CLAIMS	IND CLAIMS
13/310,755	12/04/2011	2617	1800	NEONODE.P039	18	4

CONFIRMATION NO. 1066

75660
Soquel Group, LLC
P.O. Box 691
Soquel, CA 95073

FILING RECEIPT

Date Mailed: 04/10/2012

Receipt is acknowledged of this non-provisional patent application. The application will be taken up for examination in due course. Applicant will be notified as to the results of the examination. Any correspondence concerning the application must include the following identification information: the U.S. APPLICATION NUMBER, FILING DATE, NAME OF APPLICANT, and TITLE OF INVENTION. Fees transmitted by check or draft are subject to collection. Please verify the accuracy of the data presented on this receipt. **If an error is noted on this Filing Receipt, please submit a written request for a Filing Receipt Correction. Please provide a copy of this Filing Receipt with the changes noted thereon. If you received a "Notice to File Missing Parts" for this application, please submit any corrections to this Filing Receipt with your reply to the Notice. When the USPTO processes the reply to the Notice, the USPTO will generate another Filing Receipt incorporating the requested corrections**

Applicant(s)

Magnus Goertz, Lidingo, SWEDEN;

Assignment For Published Patent Application

NEONODE, INC., Santa Clara, CA

Power of Attorney: The patent practitioners associated with Customer Number 75660

Domestic Priority data as claimed by applicant

This application is a CON of 10/315,250 12/10/2002 PAT 8095879

Foreign Applications (You may be eligible to benefit from the **Patent Prosecution Highway** program at the USPTO. Please see http://www.uspto.gov for more information.)

If Required, Foreign Filing License Granted: 12/19/2011

The country code and number of your priority application, to be used for filing abroad under the Paris Convention, is **US 13/310,755**

Projected Publication Date: 04/19/2012

Non-Publication Request: No

Early Publication Request: No

Title

USER INTERFACE

Preliminary Class

455

PROTECTING YOUR INVENTION OUTSIDE THE UNITED STATES

Since the rights granted by a U.S. patent extend only throughout the territory of the United States and have no effect in a foreign country, an inventor who wishes patent protection in another country must apply for a patent in a specific country or in regional patent offices. Applicants may wish to consider the filing of an international application under the Patent Cooperation Treaty (PCT). An international (PCT) application generally has the same effect as a regular national patent application in each PCT-member country. The PCT process **simplifies** the filing of patent applications on the same invention in member countries, but **does not result** in a grant of "an international patent" and does not eliminate the need of applicants to file additional documents and fees in countries where patent protection is desired.

Almost every country has its own patent law, and a person desiring a patent in a particular country must make an application for patent in that country in accordance with its particular laws. Since the laws of many countries differ in various respects from the patent law of the United States, applicants are advised to seek guidance from specific foreign countries to ensure that patent rights are not lost prematurely.

Applicants also are advised that in the case of inventions made in the United States, the Director of the USPTO must issue a license before applicants can apply for a patent in a foreign country. The filing of a U.S. patent application serves as a request for a foreign filing license. The application's filing receipt contains further information and guidance as to the status of applicant's license for foreign filing.

Applicants may wish to consult the USPTO booklet, "General Information Concerning Patents" (specifically, the section entitled "Treaties and Foreign Patents") for more information on timeframes and deadlines for filing foreign patent applications. The guide is available either by contacting the USPTO Contact Center at 800-786-9199, or it can be viewed on the USPTO website at http://www.uspto.gov/web/offices/pac/doc/general/index.html.

For information on preventing theft of your intellectual property (patents, trademarks and copyrights), you may wish to consult the U.S. Government website, http://www.stopfakes.gov. Part of a Department of Commerce initiative, this website includes self-help "toolkits" giving innovators guidance on how to protect intellectual property in specific countries such as China, Korea and Mexico. For questions regarding patent enforcement issues, applicants may call the U.S. Government hotline at 1-866-999-HALT (1-866-999-4158).

LICENSE FOR FOREIGN FILING UNDER

Title 35, United States Code, Section 184

Title 37, Code of Federal Regulations, 5.11 & 5.15

GRANTED

The applicant has been granted a license under 35 U.S.C. 184, if the phrase "IF REQUIRED, FOREIGN FILING LICENSE GRANTED" followed by a date appears on this form. Such licenses are issued in all applications where the conditions for issuance of a license have been met, regardless of whether or not a license may be required as

set forth in 37 CFR 5.15. The scope and limitations of this license are set forth in 37 CFR 5.15(a) unless an earlier license has been issued under 37 CFR 5.15(b). The license is subject to revocation upon written notification. The date indicated is the effective date of the license, unless an earlier license of similar scope has been granted under 37 CFR 5.13 or 5.14.

This license is to be retained by the licensee and may be used at any time on or after the effective date thereof unless it is revoked. This license is automatically transferred to any related applications(s) filed under 37 CFR 1.53(d). This license is not retroactive.

The grant of a license does not in any way lessen the responsibility of a licensee for the security of the subject matter as imposed by any Government contract or the provisions of existing laws relating to espionage and the national security or the export of technical data. Licensees should apprise themselves of current regulations especially with respect to certain countries, of other agencies, particularly the Office of Defense Trade Controls, Department of State (with respect to Arms, Munitions and Implements of War (22 CFR 121-128)); the Bureau of Industry and Security, Department of Commerce (15 CFR parts 730-774); the Office of Foreign AssetsControl, Department of Treasury (31 CFR Parts 500+) and the Department of Energy.

NOT GRANTED

No license under 35 U.S.C. 184 has been granted at this time, if the phrase "IF REQUIRED, FOREIGN FILING LICENSE GRANTED" DOES NOT appear on this form. Applicant may still petition for a license under 37 CFR 5.12, if a license is desired before the expiration of 6 months from the filing date of the application. If 6 months has lapsed from the filing date of this application and the licensee has not received any indication of a secrecy order under 35 U.S.C. 181, the licensee may foreign file the application pursuant to 37 CFR 5.15(b).

SelectUSA

The United States represents the largest, most dynamic marketplace in the world and is an unparalleled location for business investment, innovation and commercialization of new technologies. The USA offers tremendous resources and advantages for those who invest and manufacture goods here. Through SelectUSA, our nation works to encourage, facilitate, and accelerate business investment. To learn more about why the USA is the best country in the world to develop technology, manufacture products, and grow your business, visit SelectUSA.gov.

UNITED STATES PATENT AND TRADEMARK OFFICE

UNITED STATES DEPARTMENT OF COMMERCE
United States Patent and Trademark Office
Address: COMMISSIONER FOR PATENTS
P.O. Box 1450
Alexandria, Virginia 22313-1450
www.uspto.gov

APPLICATION NUMBER	FILING OR 371(C) DATE	FIRST NAMED APPLICANT	ATTY. DOCKET NO./TITLE
13/310,755	12/04/2011	Magnus Goertz	NEONODE.P039

CONFIRMATION NO. 1066

75660
Soquel Group, LLC
P.O. Box 691
Soquel, CA 95073

WITHDRAWAL NOTICE

OC000000053607209

Date Mailed: 04/10/2012

Letter Regarding a New Notice and/or the Status of the Application

If a new notice or Filing Receipt is enclosed, applicant may disregard the previous notice mailed on 12/27/2011. The time period for reply runs from the mail date of the new notice. Within the time period for reply, applicant is required to file a reply in compliance with the requirements set forth in the new notice to avoid abandonment of the application.

Registered users of EFS-Web may alternatively submit their reply to this notice via EFS-Web. https://sportal.uspto.gov/authenticate/AuthenticateUserLocalEPF.html

For more information about EFS-Web please call the USPTO Electronic Business Center at **1-866-217-9197** or visit our website at http://www.uspto.gov/ebc.

If the reply is not filed electronically via EFS-Web, the reply must be accompanied by a copy of the new notice.

If the Office previously granted a petition to withdraw the holding of abandonment or a petition to revive under 37 CFR 1.137, the status of the application has been returned to pending status.

/eggolla/

Office of Data Management, Application Assistance Unit (571) 272-4000, or (571) 272-4200, or 1-888-786-0101

Attorney's Docket No.: NEONODE.P039 *PATENT*

IN THE UNITED STATES PATENT AND TRADEMARK OFFICE

In Re Patent Application of:	)	
	)	Examiner: N/A
Magnus Goertz	)	
	)	Art Unit: 2172
Application No: 13/310,755	)	
	)	
Filed: December 4, 2011	)	
	)	
For: USER INTERFACE	)	
	)	
	)	

Mail Stop AMENDMENT
Commissioner for Patents
P. O. Box 1450
Alexandria, VA 22313-1450

PRELIMINARY AMENDMENT

Prior to examination of the subject application, applicant requests that the application be amended as follows.

Adjustment date: 04/09/2012 MTEKLEMI
12/19/2011 MTEKLEMI 00000024 13310755
02 FC:1202 -60.00 OP
03 FC:1622 -190.00 OP

04/09/2012 MTEKLEMI 00000004 13310755
01 FC:1201 250.00 OP

Favorable allowance of the application is respectfully requested.

If any matters can be resolved by telephone, applicant requests that the Patent and Trademark Office please contact the applicant at the telephone number listed below.

Respectfully submitted,
SOQUEL GROUP LLC

Dated: December 28, 2011

/Marc A. Berger/
Marc A. Berger
Reg. No. 44,029

P.O. Box 691
Soquel, CA 95073
(831) 426-8200
Customer No. 75660

PTO/SB/08a (01-10)
Approved for use through 07/31/2012. OMB 0651-0031
U.S. Patent and Trademark Office; U.S. DEPARTMENT OF COMMERCE

Under the Paperwork Reduction Act of 1995, no persons are required to respond to a collection of information unless it contains a valid OMB control number.

INFORMATION DISCLOSURE STATEMENT BY APPLICANT

(Not for submission under 37 CFR 1.99)

Application Number	13310755
Filing Date	2011-12-04
First Named Inventor	Magnus Goertz
Art Unit	2617
Examiner Name	
Attorney Docket Number	NEONODE.P039

U.S.PATENTS Remove

Examiner Initial*	Cite No	Patent Number	Kind Code[1]	Issue Date	Name of Patentee or Applicant of cited Document	Pages,Columns,Lines where Relevant Passages or Relevant Figures Appear
	1	5914709	B1	1999-06-22	Graham et al.	
	2	6292179	B1	2001-09-18	Lee	
	3	5618232	B1	1997-04-08	Martin	
	4	5612719	B1	1997-03-18	Beernink et al.	

If you wish to add additional U.S. Patent citation information please click the Add button. Add

U.S.PATENT APPLICATION PUBLICATIONS Remove

Examiner Initial*	Cite No	Publication Number	Kind Code[1]	Publication Date	Name of Patentee or Applicant of cited Document	Pages,Columns,Lines where Relevant Passages or Relevant Figures Appear
	1	20050253818	A1	2005-11-17	Nettamo	

If you wish to add additional U.S. Published Application citation information please click the Add button. Add

FOREIGN PATENT DOCUMENTS Remove

Examiner Initial*	Cite No	Foreign Document Number[3]	Country Code[2] ¡	Kind Code[4]	Publication Date	Name of Patentee or Applicant of cited Document	Pages,Columns,Lines where Relevant Passages or Relevant Figures Appear	T[5]

INFORMATION DISCLOSURE STATEMENT BY APPLICANT (Not for submission under 37 CFR 1.99)		
	Application Number	13310755
	Filing Date	2011-12-04
	First Named Inventor	Magnus Goertz
	Art Unit	2617
	Examiner Name	
	Attorney Docket Number	NEONODE.P039

	1	0703525	EP	A1	1996-03-27	Aisin Aw Co., Ltd.		☐
	2	0618528	EP	A1	1994-10-05	International Business Machines Corporation		☐
	3	0513694	EP	A2	1992-11-19	Sony Corporation		☐

If you wish to add additional Foreign Patent Document citation information please click the Add button Add

NON-PATENT LITERATURE DOCUMENTS Remove

Examiner Initials*	Cite No	Include name of the author (in CAPITAL LETTERS), title of the article (when appropriate), title of the item (book, magazine, journal, serial, symposium, catalog, etc), date, pages(s), volume-issue number(s), publisher, city and/or country where published.	T[5]
	1		☐

If you wish to add additional non-patent literature document citation information please click the Add button Add

EXAMINER SIGNATURE

Examiner Signature		Date Considered	

*EXAMINER: Initial if reference considered, whether or not citation is in conformance with MPEP 609. Draw line through a citation if not in conformance and not considered. Include copy of this form with next communication to applicant.

[1] See Kind Codes of USPTO Patent Documents at www.USPTO.GOV or MPEP 901.04. [2] Enter office that issued the document, by the two-letter code (WIPO Standard ST.3). [3] For Japanese patent documents, the indication of the year of the reign of the Emperor must precede the serial number of the patent document. [4] Kind of document by the appropriate symbols as indicated on the document under WIPO Standard ST.16 if possible. [5] Applicant is to place a check mark here if English language translation is attached.

INFORMATION DISCLOSURE STATEMENT BY APPLICANT (Not for submission under 37 CFR 1.99)		
	Application Number	13310755
	Filing Date	2011-12-04
	First Named Inventor	Magnus Goertz
	Art Unit	2617
	Examiner Name	
	Attorney Docket Number	NEONODE.P039

CERTIFICATION STATEMENT

Please see 37 CFR 1.97 and 1.98 to make the appropriate selection(s):

☐ That each item of information contained in the information disclosure statement was first cited in any communication from a foreign patent office in a counterpart foreign application not more than three months prior to the filing of the information disclosure statement. See 37 CFR 1.97(e)(1).

OR

☐ That no item of information contained in the information disclosure statement was cited in a communication from a foreign patent office in a counterpart foreign application, and, to the knowledge of the person signing the certification after making reasonable inquiry, no item of information contained in the information disclosure statement was known to any individual designated in 37 CFR 1.56(c) more than three months prior to the filing of the information disclosure statement. See 37 CFR 1.97(e)(2).

☐ See attached certification statement.

☐ The fee set forth in 37 CFR 1.17 (p) has been submitted herewith.

☒ A certification statement is not submitted herewith.

SIGNATURE

A signature of the applicant or representative is required in accordance with CFR 1.33, 10.18. Please see CFR 1.4(d) for the form of the signature.

Signature	/Marc A. Berger/	Date (YYYY-MM-DD)	2012-02-08
Name/Print	Marc A. Berger	Registration Number	44029

This collection of information is required by 37 CFR 1.97 and 1.98. The information is required to obtain or retain a benefit by the public which is to file (and by the USPTO to process) an application. Confidentiality is governed by 35 U.S.C. 122 and 37 CFR 1.14. This collection is estimated to take 1 hour to complete, including gathering, preparing and submitting the completed application form to the USPTO. Time will vary depending upon the individual case. Any comments on the amount of time you require to complete this form and/or suggestions for reducing this burden, should be sent to the Chief Information Officer, U.S. Patent and Trademark Office, U.S. Department of Commerce, P.O. Box 1450, Alexandria, VA 22313-1450. DO NOT SEND FEES OR COMPLETED FORMS TO THIS ADDRESS. **SEND TO: Commissioner for Patents, P.O. Box 1450, Alexandria, VA 22313-1450.**

Privacy Act Statement

The Privacy Act of 1974 (P.L. 93-579) requires that you be given certain information in connection with your submission of the attached form related to a patent application or patent. Accordingly, pursuant to the requirements of the Act, please be advised that: (1) the general authority for the collection of this information is 35 U.S.C. 2(b)(2); (2) furnishing of the information solicited is voluntary; and (3) the principal purpose for which the information is used by the U.S. Patent and Trademark Office is to process and/or examine your submission related to a patent application or patent. If you do not furnish the requested information, the U.S. Patent and Trademark Office may not be able to process and/or examine your submission, which may result in termination of proceedings or abandonment of the application or expiration of the patent.

The information provided by you in this form will be subject to the following routine uses:

1. The information on this form will be treated confidentially to the extent allowed under the Freedom of Information Act (5 U.S.C. 552) and the Privacy Act (5 U.S.C. 552a). Records from this system of records may be disclosed to the Department of Justice to determine whether the Freedom of Information Act requires disclosure of these record s.

2. A record from this system of records may be disclosed, as a routine use, in the course of presenting evidence to a court, magistrate, or administrative tribunal, including disclosures to opposing counsel in the course of settlement negotiations.

3. A record in this system of records may be disclosed, as a routine use, to a Member of Congress submitting a request involving an individual, to whom the record pertains, when the individual has requested assistance from the Member with respect to the subject matter of the record.

4. A record in this system of records may be disclosed, as a routine use, to a contractor of the Agency having need for the information in order to perform a contract. Recipients of information shall be required to comply with the requirements of the Privacy Act of 1974, as amended, pursuant to 5 U.S.C. 552a(m).

5. A record related to an International Application filed under the Patent Cooperation Treaty in this system of records may be disclosed, as a routine use, to the International Bureau of the World Intellectual Property Organization, pursuant to the Patent Cooperation Treaty.

6. A record in this system of records may be disclosed, as a routine use, to another federal agency for purposes of National Security review (35 U.S.C. 181) and for review pursuant to the Atomic Energy Act (42 U.S.C. 218(c)).

7. A record from this system of records may be disclosed, as a routine use, to the Administrator, General Services, or his/her designee, during an inspection of records conducted by GSA as part of that agency's responsibility to recommend improvements in records management practices and programs, under authority of 44 U.S.C. 2904 and 2906. Such disclosure shall be made in accordance with the GSA regulations governing inspection of records for this purpose, and any other relevant (i.e., GSA or Commerce) directive. Such disclosure shall not be used to make determinations about individuals.

8. A record from this system of records may be disclosed, as a routine use, to the public after either publication of the application pursuant to 35 U.S.C. 122(b) or issuance of a patent pursuant to 35 U.S.C. 151. Further, a record may be disclosed, subject to the limitations of 37 CFR 1.14, as a routine use, to the public if the record was filed in an application which became abandoned or in which the proceedings were terminated and which application is referenced by either a published application, an application open to public inspections or an issued patent.

9. A record from this system of records may be disclosed, as a routine use, to a Federal, State, or local law enforcement agency, if the USPTO becomes aware of a violation or potential violation of law or regulation.

(19) Europäisches Patentamt
European Patent Office
Office européen des brevets

(11) Publication number: **0 513 694 A2**

(12) EUROPEAN PATENT APPLICATION

(21) Application number: **92107819.2**

(51) Int. Cl.[5]: **G06F 3/033**

(22) Date of filing: **08.05.92**

(30) Priority: **09.05.91 JP 133443/91**

(43) Date of publication of application:
19.11.92 Bulletin 92/47

(84) Designated Contracting States:
DE FR GB

(71) Applicant: **SONY CORPORATION**
7-35, Kitashinagawa 6-chome Shinagawa-ku
Tokyo(JP)

(72) Inventor: **Tanaka, Hidekazu**
c/o Sony Corporation, 7-35 Kitashinagawa 6-chome
Shinagawa-ku, Tokyo(JP)

(74) Representative: **Melzer, Wolfgang, Dipl.-Ing. et al**
Mitscherlich und Partner, Steinsdorfstrasse 10
W-8000 München 22(DE)

(54) Apparatus and method for inputting data.

(57) A data input apparatus comprising a pen for selectively indicating and inputting (1) desired data; a display unit (9) for displaying an image of the input data; a tablet (8) for obtaining coordinate data by indicating with the pen the position corresponding to a predetermined portion of a pattern displayed on the display unit (9); means for detecting the coordinate data in response to a downward press of the pen to the tablet (8), and further detecting the coordinate data in response to an upward lift of the pen from the tablet (8); means for setting a first region of a predetermined area in the tablet (8), and also setting a second region which includes the first region and has an area greater than that of the first region; and deciding means for accepting the input data in response to a downward press of the pen to the first region and thereafter settling the input data in response to an upward lift of the pen from the second region. The apparatus is capable of preventing unintentional cancel of the input data that may result from an accidental displacement of the pen-up region beyond the pen-down region, hence facilitating accurate input of data to consequently realize faster manipulation.

FIG. 1

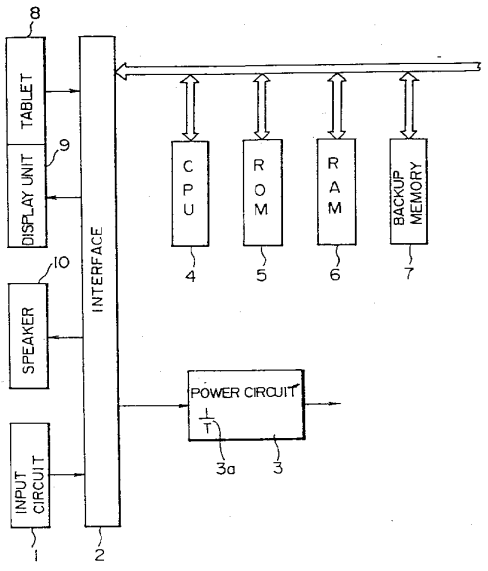

EP 0 513 694 A2

BACKGROUND OF THE INVENTION

1. Field of the Invention

The present invention relates to an apparatus and a method for inputting data by utilizing a pattern displayed on the screen of a display unit.

2. Description of the Prior Art

In an attempt to achieve dimensional reduction in a computer or the like, it has been known heretofore to employ an apparatus where a transparent tablet is stuck onto a display screen and, when a pen is brought down to a key-shaped pattern displayed on the screen, a coordinate signal corresponding to the position of the key is generated from the tablet so that the same effect as depression of the key is attained.

Fig. 8 shows an example of such apparatus, wherein the function of an electronic desk calculator is displayed on a screen, and an input accepted in accordance with a downward press of a pen to a button region is settled when the pen is lifted up from the same region. In such an apparatus, when the pen is pressed down to one button position for example, the button is displayed as a reversal image. The input is settled in response to a pen-up action while the displayed image is reversed again to the normal state, and the numerical input or input data to be processed is registered.

In case the input data is to be changed immediately after depressing the button because of an erroneous depression or some other reason, the input can be canceled by dragging the down-position pen to the outside of the button region and then lifting up the pen therefrom.

In such arrangement, the keyboard portion is displayed on the screen merely at the required time, so that it becomes possible to eliminate the necessity of the space for attaching the keyboard, to consequently form the structure in smaller dimensions. Furthermore, upon erroneous button depression or the like, the input data can be immediately canceled without the need of any particular manipulation to eventually enhance the handling convenience.

However, in a small-sized electronic notebook or the like, it is requisite to display individual buttons within a limited region due to the relationship to the display area. Particularly when the apparatus is manipulated fast, there may occur a fault that the pen-up region is deviated from the pen-down region by some shake of the user's hand and so forth. In such a case, the input is canceled contrary to the user's intention for execution of the process, and the same manipulation needs to be repeated.

OBJECT AND SUMMARY OF THE INVENTION

It is an object of the present invention to provide an improvement capable of preventing unintentional cancel of input data that may otherwise result from a deviation of a pen-up region from a pen-down region.

According to one aspect of the present invention, there is provided a data input apparatus which comprises a pen for selectively indicating and inputting desired data; a display unit for displaying an image of the input data; a tablet for obtaining coordinate data by indicating with the pen the position corresponding to a predetermined portion of a pattern displayed on the display unit; means for detecting the coordinate data in response to a downward press of the pen to the tablet, and further detecting the coordinate data in response to an upward lift of the pen from the tablet; means for setting a first region of a predetermined area in the tablet, and also setting a second region which includes the first region and has an area greater than that of the first region; and deciding means for accepting the input data in reponse to a downward press of the pen to the first region and thereafter settling the input data in response to an upward lift of the pen from the second region.

According to another aspect of the present invention, there is provided a method of inputting data by the use of a pen for selectively indicating and inputting desired data, a display unit for displaying an image of the input data, and a tablet for obtaining coordinate data by indicating with the pen the position corresponding to a predetermined portion of a pattern displayed on the display unit. The method comprises the steps of: detecting the coordinate data in response to a downward press of the pen to the tablet; deciding, in accordance with the result of such detection, that the indication signifies a first region corresponding to the position where a desired key is displayed on the display unit; accepting the input data in response to the result of the decision; deciding that the pen has been lifted up from a second region which includes the first region and has an area greater than that of the first region; and settling the input data in accordance with such decision.

Due to the constitution mentioned, the input data is retained when the pen pressed down to the first region is held within the second region which is wider than the first region, so that if the pen is displaced to the outside of the first region, an unintentional cancel of the input data can be prevented unless the pen is displaced beyond the second region.

The above and other features and advantages of the present invention will become apparent from the following description which will be given with

reference to the illustrative accompanying drawings.

BRIEF DESCRIPTION OF THE DRAWINGS

Fig. 1 is a block diagram of an exemplary embodiment representing the data input apparatus of the present invention;

Fig. 2 is a flow chart showing the procedure of an operation performed in the apparatus of Fig. 1;

Fig. 3 shows exemplary contents displayed on the screen prior to detection of a pen-down action;

Fig. 4 schematically illustrates a first region;

Fig. 5 schematically illustrates a second region;

Fig. 6 shows a display state where the pen has been pressed down to a button "5";

Fig. 7 shows a display state where the accepted input of the button "5" has been settled; and

Fig. 8 shows exemplary contents displayed on a screen in a conventional apparatus.

DESCRIPTION OF THE PREFERRED EMBODIMENT

Fig. 1 is a block diagram showing the constitution of an embodiment representing an electronic notebook to which the present invention is applied. In the diagram, an input circuit 1 incorporates a variety of switches including a power switch, and signals for actuating such switches are supplied thereto from a CPU 4 via an interface 2. A DC voltage obtained by rectifying and smoothing an AC power is supplied to a power circuit 3. The power circuit 3 has a battery 3a therein, and a voltage obtained from an AC power source is used as a system operating voltage. In case no voltage is supplied from the AC power source, the voltage obtained from the battery 3a is used as the system operating voltage.

To the interface 2, there are connected a tablet 8, a display unit 9 and a loudspeaker 10. Furthermore the CPU 4, a ROM 5, a RAM 6 and a backup memory 7 are also connected thereto via a bus line.

The tablet 8 is constituted by sticking transparent touch electrodes to a face of the display unit 9, and patterns of buttons or the like visually represented on the display unit 9 are used as input buttons of the tablet 8. When the user touches any pattern such as a button seen through the transparent electrode, a coordinate signal corresponding to the touched portion is supplied to the CPU 4 so that predetermined data is inputted.

In this manner, the tablet is so formed as to generate a coordinate signal corresponding to the portion touched by the user. For generation of such a signal, it is possible to employ either a pressure sensitive type which generates a signal in accordance with a variation in the pressure, or a capacitance type which generates a signal in accordance with a variation in the static capacitance.

Fig. 2 is a flow chart showing the procedure of a button tracing operation performed in the apparatus where the present invention is applied. In the process of the flow chart, the operation is started when the pen has been pressed down to a desired button (in an under-mentioned first region). As shown at step 100 in Fig. 2, a first region for recognizing a pen-down action is set with respect to the entire buttons, i.e., a display region is set for each button illustrated in Fig. 3. Taking a button "5" here as an example, the first region for this button is substantially rectangular as represented by a thick line in Fig. 4, and is defined by coordinates (x1, Y1) at the upper left corner and coordinates (x2, y2) at the lower right corner.

Subsequently at step 101, a second region for recognizing a pen-up action is set with respect to each of the buttons already set at step 100. As illustrated in Fig. 5, the second region includes the first region and is greater in area than the first region by a width w. The second region is shaped into a substantially rectangular pattern defined by coordinates (x3, y3) at the upper left corner and coordinates (x4, y4) at the lower right corner.

Next at step 102, a flag in each button is initialized (f = 0). In this state, a process of accepting a pen-down action is executed at step 103, where a decision is made to discriminate between a pen-down action and a pen-up action, and the coordinates (x, y) thereof are detected. In this case, the coordinates (x, y) are judged to be in which of the button regions set at step 100. (Coordinate detecting means)

The result of the detection at step 103 is decided at step 104. When the result of such decision signifies a pen-down action, a further decision is made at step 105 as to whether the coordinates detected at step 103 are within the pen-up region, i.e., the second region.

If the result of the decision at step 105 signifies that the pen-down coordinates are within the second region, another decision is made as to whether the flag is 0 or not. Since the flag has already been initialized at step 102, the flag is judged here to be 0. Therefore, at step 107, the flag is set to 1.

Then the displayed image of the button in the pen-down region (first region) is turned to a reversal image at step 108, and the operation returns to step 103. The state of the pen at this moment is detected at step 104, and if the pen-down action is continuously maintained, such state is judged at step 104. Thereafter a decision is made at step 105 as to whether the pen is still within the button-

up region or not.

Fig. 6 illustrates the displayed content in the stage of the operation mentioned. In this embodiment, there is shown an exemplary state where the button "5" is depressed and displayed as a reversal image.

Subsequently a decision is made at step 106 as to whether the flag is 0 or not. Since the flag has already been set to 1 at step 107, the flag is judged to be not 0 at this time, so that the operations returns to step 103. In this case, the displayed content remains unchanged.

During the continuous pen-down state, if the result of the decision signifies that the coordinates corresponding to the pen-down position at step 105 are outside the button-up region (second region), a further decision is made at step 115 as to whether the flag 1 is 1 or not. Since the flag is 1 at this moment as mentioned, the flag is set to 0 at step 116, and the state of the displayed content is reversed at step 108.

The displayed content is reversed to the former state of Fig. 3 by clearing the reversal display of the input data. This process is relevant to a manipulation performed when the input data is to be canceled because, for example, the pen was displaced to any position outside the first-depressed button region due to an accidental slip of the user's hand, or the data was inputted by an erroneous depression or the like. Even in such condition, the input of the preceding button can be accepted by reverting the pen from the down-position thereof to the former button-up region (second region).

Upon acceptance of the proper input, the user performs a pen-up action by lifting the pen upward from the tablet. Since the flag is set to 1 at step 107 in case the proper input is accepted, the flag is judged to be 1 at step 120, and then the displayed button is turned to a reversal image at step 121.

More specifically, the reversal image obtained by the pen-down action is reversed again to the former state, whereby the reversal display is cleared. The depression of the button is recognized through such process and, as shown in Fig. 7, the displayed image of the button "5" is reversed to the former state, while the accepted input data "5" is settled and displayed in the window 21.

Meanwhile, when the pen is shifted to any position outside the second region, the flag is set to 0 at step 116, so that if the pen is lifted up in such a state, the flag is judged to be not 1 at step 120 (deciding means). Accordingly the result of the decision signifies that no button has been depressed at this moment.

The description given above can be summarized as follows.

Upon detection of a pen-down action to the first region of a desired button, a decision is made as to which button has been depressed, and the depressed button (first region) is displayed as a reversal image. In case any wrong button is displayed due to an erroneous depression or insufficient detection precision, the input manipulation can be canceled by first shifting the pen from the down-position to the outside of the second region and then lifting up the pen therefrom.

Even if the pen is accidentally displaced to the outside of the first region by some shake of the user's hand or the like, the selected input is retained effective unless the pen is displaced beyond the second region which is dimensionally greater than the first region. And even when the reversal image of the button is deleted with a displacement to the outside of the second region, the reversal image of the button is displayed again by reverting the pen to the first region while holding the pen in its down-state, whereby the input is accepted.

If the pen is lifted up with the input accepted, the reversal display of the button is deleted, and the input from the button is settled. At this time, even if the pen is positioned outside the first region, the input is processed as effective data unless the pen is further displaced outside the second region, so that there never occurs an unintentional cancel of the input.

According to the present invention, as described hereinabove, the input data is retained, in response to the detection of a pen-down action to a desired pattern, in the area wider than the pen-down region. Therefore, even in an apparatus having a small-sized display device, unintentional cancel of the input is hardly induced to consequently achieve an advantage of facilitating accurate input of data, whereby it is rendered possible to attain faster manipulation of the apparatus.

Claims

1. A data input apparatus with pen means comprising:

a pen for selectively indicating and inputting (1) desired data;

a display unit (9) for displaying an image of the input data;

a tablet (8) for obtaining coordinate data by indicating with said pen the position corresponding to a predetermined portion of a pattern displayed on said display unit (9);

means (2, 4) for detecting the coordinate data in response to a downward press of said pen to said tablet (8), and further detecting the coordinate data in response to an upward lift of said pen from said tablet (8);

means for setting a first region of a predetermined area in said tablet (8), and also

setting a second region which includes said first region and has an area greater than that of said first region; and

deciding means for accepting the input data in response to a downward press of said pen to said first region and thereafter settling said input data in response to an upward lift of said pen from said second region.

2. The apparatus according to claim 1, wherein said tablet (8) is superposed on said display unit (9) in such a manner that the displayed image on said display unit (9) is rendered visible through said tablet (8).

3. The apparatus according to claim 1 or 2, wherein said deciding means is so formed as not to execute said data settling process if said pen is lifted upward from any position outside said second region after the input data is accepted with the downward press of said pen to said first region, and said means executes a predetermined process without any indication of data by said pen.

4. The apparatus according to anyone of claims 1 to 3, wherein said predetermined portion is displayed in the shape of a key on said display unit (9), and said first region is so set as to be equal to said key-shaped portion.

5. The apparatus according to claim 4, further having display control means which controls the display state in such a manner that the displayed image of said key is reversed when said input data is accepted from said deciding means, and is reversed again to the former state when said input data is settled.

6. The apparatus according to anyone of claims 1 to 5, wherein said apparatus is a small-sized portable computer.

7. A method of inputting data by the use of a pen for selectively indicating and inputting (1) desired data, a display unit (9) for displaying an image of the input data, and a tablet (8) for obtaining coordinate data by indicating with said pen the position corresponding to a predetermined portion of a pattern displayed on said display unit (9), said method comprising the steps of:

detecting the coordinate data in response to a downward press of said pen to said tablet (8);

deciding, in accordance with the result of such detection, that the indication signifies a first region corresponding to the position where a desired key is displayed on said display unit (9);

accepting the input data in response to the result of the decision;

deciding that said pen has been lifted up from a second region which includes said first region and has an area greater than that of said first region; and

settling the input data in accordance with such decision.

FIG. 1

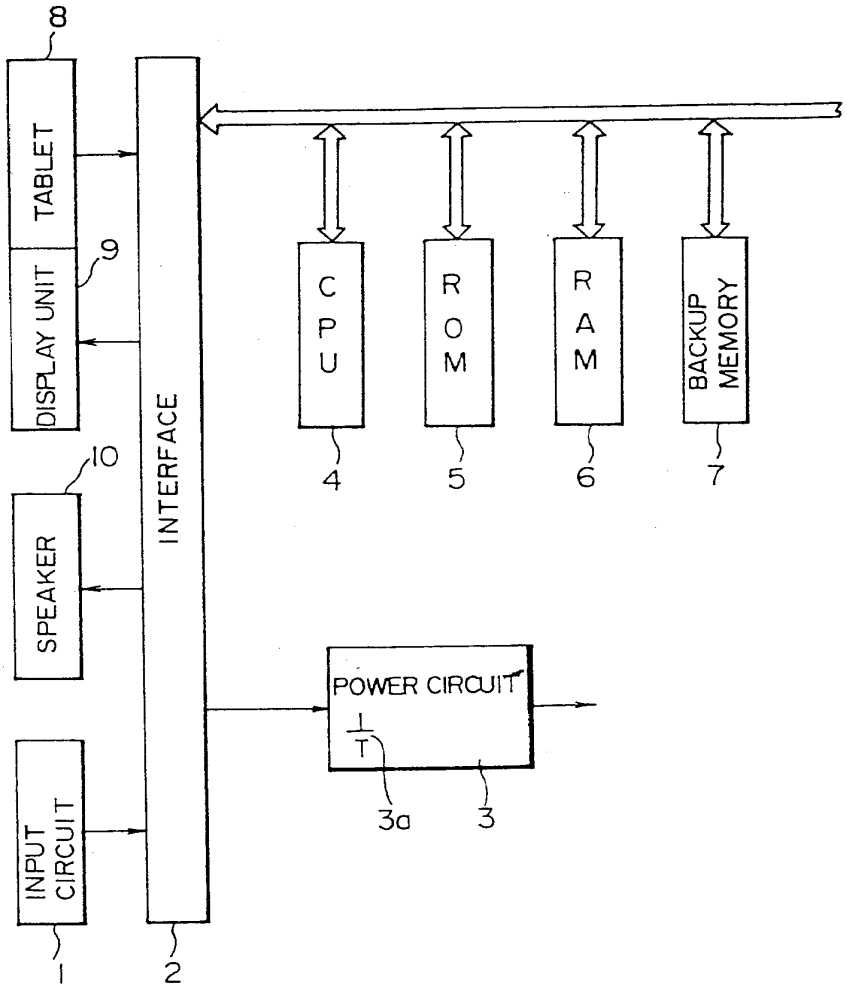
8
TABLET
9
DISPLAY UNIT
10
SPEAKER
INPUT CIRCUIT
1
INTERFACE
2
CPU
4
ROM
5
RAM
6
BACKUP MEMORY
7
POWER CIRCUIT
T
3a
3

FIG. 2

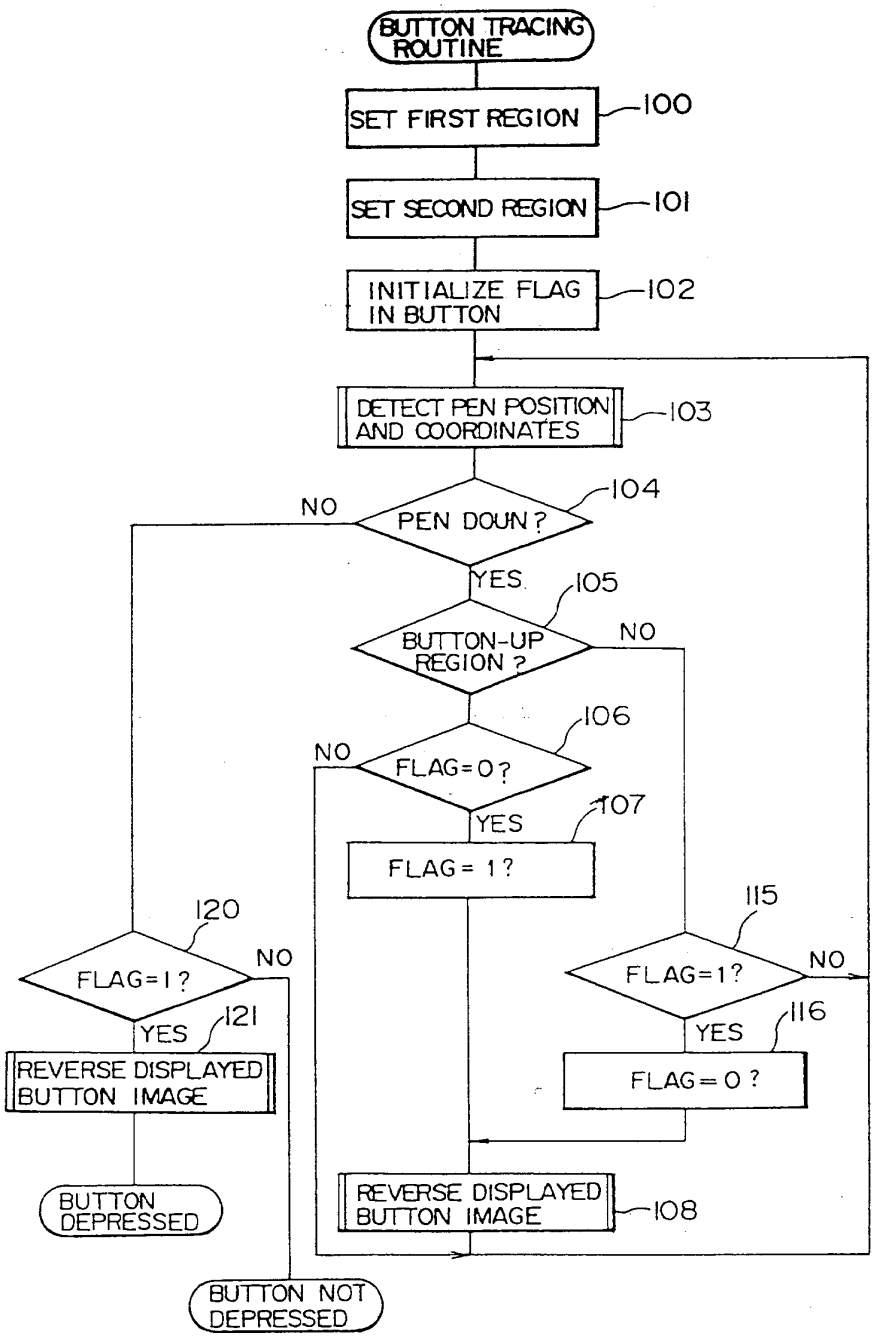
BUTTON TRACING ROUTINE
SET FIRST REGION
100
SET SECOND REGION
101
INITIALIZE FLAG IN BUTTON
102
DETECT PEN POSITION AND COORDINATES
103
PEN DOUN ?
104
NO
YES
BUTTON-UP REGION ?
105
NO
FLAG=0?
106
NO
YES
FLAG=1?
107
FLAG=1?
120
NO
YES
121
REVERSE DISPLAYED BUTTON IMAGE
BUTTON DEPRESSED
BUTTON NOT DEPRESSED
FLAG=1?
115
NO
YES
116
FLAG=0?
REVERSE DISPLAYED BUTTON IMAGE
108

FIG. 3

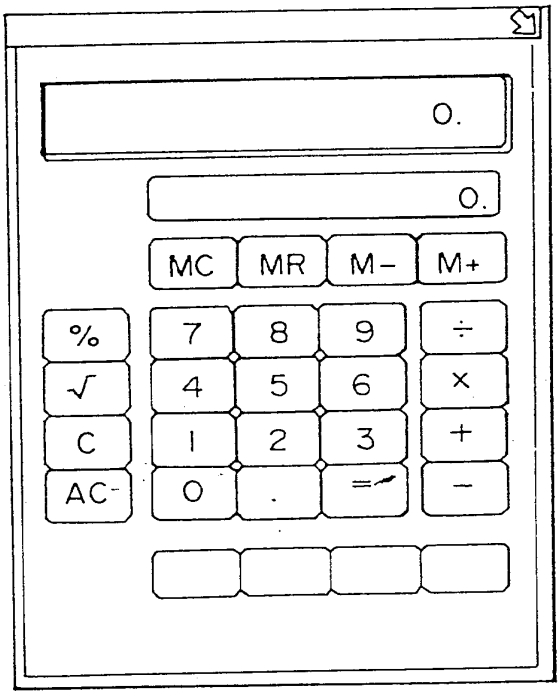

FIG. 4

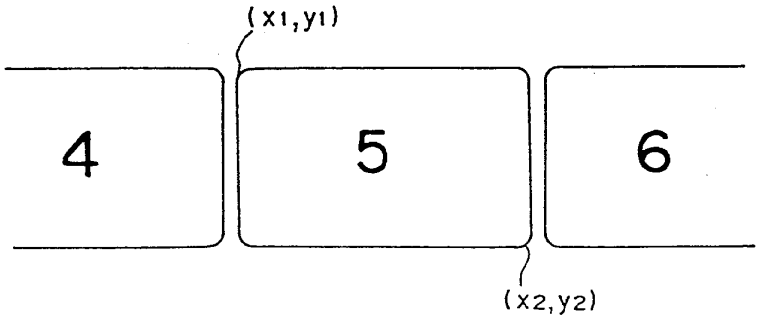

FIG. 5

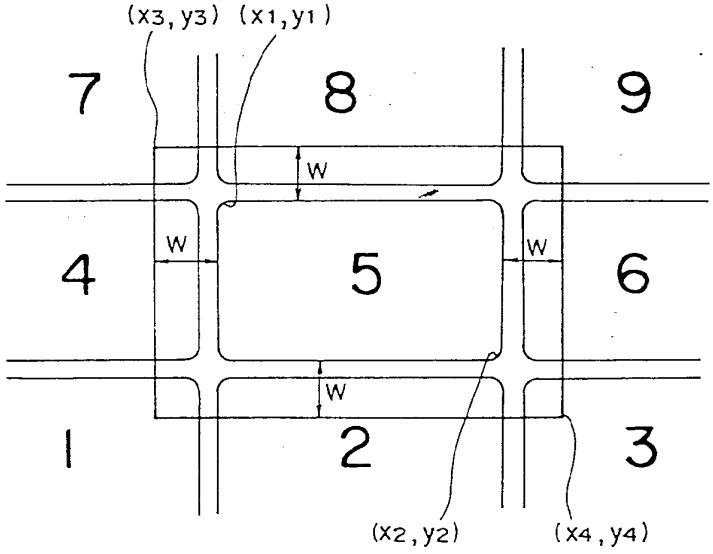

FIG. 6

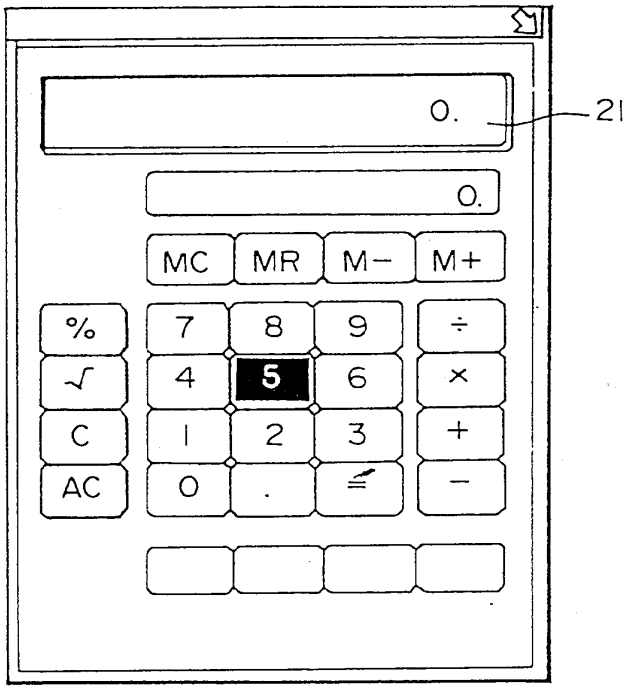

FIG. 7

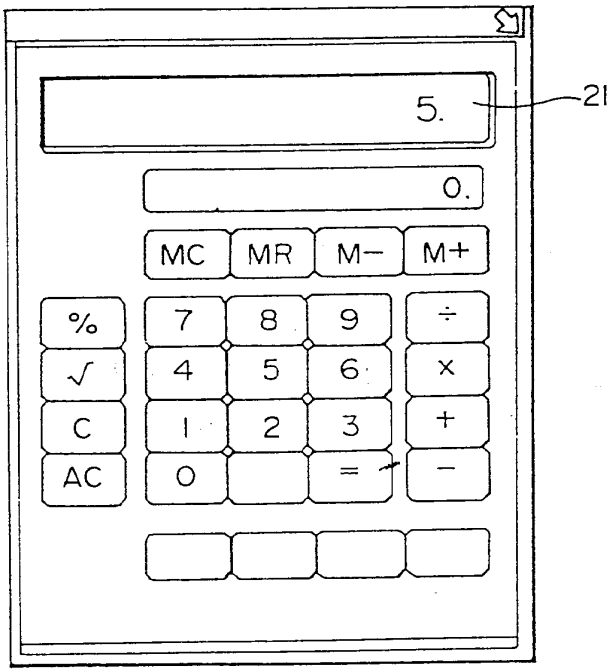

FIG. 8

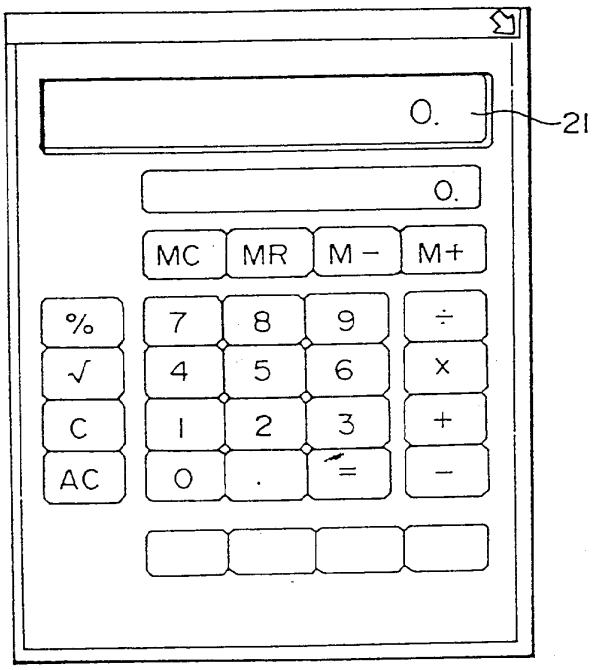

(19) Europäisches Patentamt
European Patent Office
Office européen des brevets

(11) Publication number : **0 618 528 A1**

(12) EUROPEAN PATENT APPLICATION

(21) Application number : **94480019.2**

(51) Int. Cl.[5] : **G06F 3/033**

(22) Date of filing : **22.02.94**

(30) Priority : **01.04.93 US 42048**

(43) Date of publication of application :
05.10.94 Bulletin 94/40

(84) Designated Contracting States :
AT BE CH DE ES FR GB IT LI NL SE

(71) Applicant : **International Business Machines Corporation**
Old Orchard Road
Armonk, N.Y. 10504 (US)

(72) Inventor : **Bates, Cary Lee**
3032 Knoll Lane
Rochester, Minnesota 55901 (US)
Inventor : **Watts, Byron Timothy**
500 Fourth Street N.W.
Byron, Minnesota 55920 (US)

(74) Representative : **de Pena, Alain**
Compagnie IBM France
Département de Propriété Intellectuelle
F-06610 La Gaude (FR)

(54) Dynamic touchscreen button adjustment mechanism.

(57) A computer based touchscreen includes a mechanism for displaying buttons on the touchscreen indicating the location where an user has touched the touchscreen. Because different operators will view the buttons from different angles, they will touch the touchscreen in different positions. An initial button or series of buttons of the application that the user is using is configured to sense the location where the user is touching. These initial button(s) are called adjusting buttons. The button sensing regions for the remaining buttons (non-adjusting buttons) are calibrated from these initial touched locations. For example, if the user tends to press high and to the right of the adjusting button(s), the orientation of the button sensing regions for the remaining buttons is calibrated high and to the right. If multiple adjusting buttons are used, the average of the touched positions is used to calibrate the button sensing regions of the non-adjusting buttons. The adjusting buttons are not restricted to the beginning of the application. Any screen that displays buttons can be used to calibrate or recalibrate the button sensing region for subsequent non-adjusting buttons. This allows for greater accuracy should the users change their view or angle of the touchscreen as they use the application. Thus, the computer dynamically adjusts the orientation of a touchscreen button's sensing region based on the location that the user has pressed for previous buttons. This dynamic adjustment allows a high density of buttons to be displayed on the touchscreen.

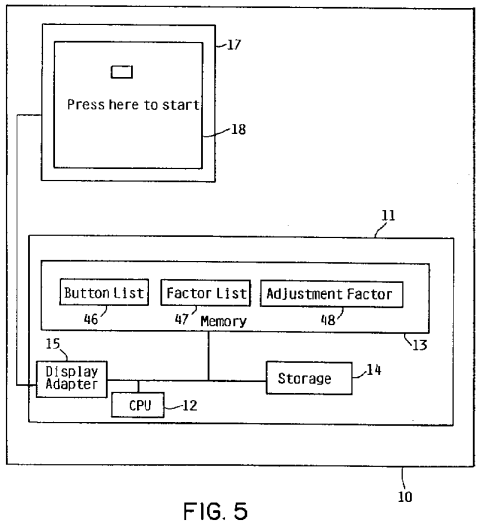

FIG. 5

EP 0 618 528 A1

This invention relates to the data processing field. More particularly, this invention relates to a touchscreen apparatus for adjusting a sensing region based on the location that the user touches on the touchscreen, which is contained in a display.

Touchscreens are well known in the art where the user communicates a desired action to a computer by touching a touchscreen in a specific location. The computer system displays graphics on the touchscreen that represent buttons. The user interfaces to the computer system by touching the touchscreen in a displayed button's sensing region, which is the area on the touchscreen that the computer system associates with the button. The computer system detects the user's touch, maps the touched location to a particular button, and performs appropriate functions based on the button that the user selected via the touch.

Touchscreens are advantageous in that they can eliminate the need for a keyboard or other input device in applications where a separate input device would be cumbersome, expensive, or susceptible to vandalism. Also, with a touchscreen the user is not forced to read instructions in one place and hunt elsewhere, such as on a keyboard, for keys to press. Instead, the instructions that the user reads and the buttons that the user touches are in the same proximity. This close proximity of instructions and buttons is more convenient and faster for the user and reduces the chance of incorrect button selection.

However, touchscreens suffer from the problem that the buttons on the touchscreen are two dimensional, and although the buttons are visually distinct from one another, they are not physically distinct from one another. Thus, while a user of a conventional keyboard can feel when a finger is straying over the edge of the intended key and onto an adjacent, unintended key, the user of a touchscreen cannot feel when a finger is straying over the edge of a button. These problems are exacerbated by the fact that the touchscreen has thickness, so while the button is projected onto the back of the touchscreen, the user touches it from the front. This screen thickness plus the parallax effect, causes different users to perceive the same button in potentially different places. For example, tall users standing to the right of the touchscreen will tend to perceive the button as being above and to the right of the actual button position, so they will tend to touch high and to the right of the button sensing region. Analogously, short users standing to the left of the touchscreen will tend to perceive the button as being below and to the left of the actual button position, so they will tend to touch low and to the left of the button sensing region.

The cumulative effect of these problems causes users to be unsure of whether or not they have touched the intended button, especially when the buttons are small and close together. In contrast, on a conventional keyboard, users can be reasonably confident that they have depressed the intended key because the key is three dimensional, moves downward when pressed, and is tactilely separate from adjacent keys.

The prior art touchscreens attempt to solve these problems by the computer system either displaying the button over a larger than desired area or utilizing a larger than desired button sensing region associated with the button. Both these solutions severely limited the density and orientation of displayed buttons on the touchscreen.

For the foregoing reasons, there is a need for a touchscreen that allows a high density of displayed buttons with accurate selection of buttons by users who are viewing the touchscreen from a variety of view angles.

It is an object of the present invention to provide an enhanced touchscreen.

It is a further object to allow a high density of displayed buttons with accurate selection of buttons to be used on a touchscreen apparatus.

It is a further object to allow accurate selection of buttons on a touchscreen apparatus by users viewing the touchscreen from all view angles.

These and other objects are achieved by the computer system dynamically adjusting the orientation of a touchscreen button's sensing region based on the location that the user has touched for a previous button or buttons.

An initial button or series of buttons of the application that the user is using is configured to sense the location where the user is touching. These initial button(s) are called adjusting buttons. The button sensing regions for the remaining buttons (non-adjusting buttons) are calibrated from these initial touched locations. For example, if the user tends to press high and to the right of the adjusting button(s), the orientation of the button sensing regions for the remaining buttons is calibrated high and to the right. If multiple adjusting buttons are used, the average of the touched positions is used to calibrate the button sensing regions of the non-adjusting buttons.

The adjusting buttons are not restricted to the beginning of the application. Any screen that displays buttons can be used to calibrate or recalibrate the button sensing region for subsequent non-adjusting buttons. This allows for greater accuracy should the users change their view or angle of the touchscreen as they use the application.

Fig. 1 shows the parallax effect, present in a touchscreen, which causes different view angles to result in different users perceiving the button at different locations;

Fig. 2 shows a prior art touchscreen button and sensing region;

Fig. 3 shows users viewing the touchscreen of the preferred embodiment, which is shown in this example as a ticket kiosk, from different angles;

Figs. 4a and 4b show an example of a seat selection screen of the preferred embodiment, which allows a high density of buttons on the screen;

Fig. 5 shows a block diagram of the computer system of the preferred embodiment;

Figs. 6a, 6b, 6c, 6d, and 6e show the button list, factor list, and adjustment factor of the preferred embodiment and their relationships to the button sensing region; and

Figs. 7, 8, and 9 show the flowcharts that describe the operation of the preferred embodiment.

Fig. 1 is a side view of display 17 and shows the parallax effect, which causes different user view angles to result in different users perceiving button 20 at different locations. Touchscreen 18 in display 17 has thickness 23, which is the distance between touchscreen back 28 and touchscreen front 22. Although button 20 is projected onto the touchscreen back 28, users 24 and 26 will attempt to touch it on touchscreen front 22. Screen thickness 23 plus the parallax effect, causes different operators 24 and 26 to perceive button 20 in different places. User 24 will perceive and attempt to touch button 20 at button location 29. In contrast, user 26 will perceive and attempt to touch button 20 at button location 21, which in this example is lower on touchscreen 18 than button location 29.

Fig. 2 shows prior art display 67, touchscreen 68, touchscreen button 60, and button sensing region 64. Button sensing region 64 is the area of touchscreen 68 associated with button 60 such that if the user touches within button sensing region 64, the computer system considers button 60 to have been touched. To solve the parallax problem illustrated in Fig. 1, prior art touchscreens utilized button sensing regions 64 that were larger than their corresponding buttons 60. The prior art solution illustrated by Fig. 2 is disadvantageous in that sensing regions 64 are large and thus limit the density and orientation of buttons 60 that may be concurrently displayed on touchscreen 68.

Fig. 3 shows users 24 and 26 viewing button 20 from different angles. Button 20a is displayed on touchscreen 18 in display 17. For purposes of illustration, the application in this example is ticket kiosk 30. Because of the parallax effect and screen thickness 23 described in Fig 1., tall user 24 standing to the right of ticket kiosk 30 will tend to view and press button 20a above and to the right of its actual position. In contrast, short user 26, standing to the left of ticket kiosk 30 will tend to view and press button 20a below and to the left of its actual position. To accommodate the differences in perception of different operators, this invention dynamically adjusts the button sensing regions, as will be shown in Figs. 4a, 4b, 6a, 6b, 6c, 6d, and 6e, and explained in more detail in the flowcharts of Figs. 7, 8, and 9.

Fig. 4a illustrates display 17 and touchscreen 18 of the preferred embodiment displaying an exemplary seat selection screen. In this example, the aggregation of all buttons 20 represents a section of seats in a stadium. Users can touch a button to select the seat for which they wish to purchase a ticket. The buttons with an X through them represent seats that have already been sold. For such a seat selection application, it is critical that the buttons be small with fine enough resolution to allow many seats to be displayed close together. This invention allows a high density of buttons with fine resolution on touchscreen 18 because the button sensing regions are dynamically adjusted to suit individual users, as will be shown in Fig 4b.

Fig. 4b is a close up view of a few of buttons 20 and their corresponding button sensing regions 34. In this example, each button sensing region 34 has been adjusted up and to the right to accommodate a user who tends to touch high and to the right of button 20. Thus, button sensing region 34c is associated with button 20c. When the user touches within button sensing region 34c, the invention associates that touch with button 20c. Likewise, when the user touches within button sensing region 34d or 34e, the invention associates that touch with buttons 20d or 20e respectively. In this way a high density of buttons 20 can be displayed and selected on touchscreen 18.

Fig. 5 shows a block diagram of computer system 10 of the preferred embodiment of the invention. Computer system 10 has touchscreen 18 in display 17 connected to system unit 11. System unit 11 contains processor 12 connected to memory 13, storage 14, and display adapter 15. Processor 12 is suitably programmed to carry out this invention, as described in more detail in the flowcharts of Figs. 7, 8, and 9.

In the preferred embodiment, computer system 10 is an IBM PS/2, storage 14 is a magnetic hard disk file, display adapter 15 is an IBM VGA display adapter, and display 17 is an IBM 8516 display. Computer system 10 could also be another type of computer system, whether it be another microcomputer such as an Apple Macintosh, a minicomputer such as an IBM AS/400, or a mainframe computer such as an IBM System/390, and still fall within the spirit and scope of this invention. In addition, computer system 10 could be a microcomputer such as described above but connected to a larger computer system such as an IBM AS/400.

Button list 46 defines button sensing region 34 for each button 20. Factor list 47 contains a list of factors that represent the difference between the center of button sensing region 34 and the locations that the user has touched. In the preferred embodiment, adjustment factor 48 is the average of the factors in factor list 47. Button list 46, factor list 47, and adjustment factor 48 will be explained in more detail under the description of Figs. 6a - 6e.

Figs. 6a, 6b, 6c, 6d, and 6e show factor list 47, ad-

justment factor 48, and the relationship of button list 46 to button 20 and button sensing region 34 in more detail. Button list 46 is a list of button entries. Each entry in button list 46 defines a button sensing region 34 for a button 20 on touchscreen 18 via fields 49, 50, 51, and 52. In the preferred embodiment, there is a separate button list for every screen of buttons displayed, but there could be just one button list for the entire application without departing from the invention. In the preferred embodiment, buttons are displayed as rectangles on the touchscreen, but the buttons could be any geometric shape including, but not limited to, circles, ovals, or polygons with any number of sides. Field 50 defines the upper left point of button sensing region 34. Field 51 defines the lower right point of button sensing region 34. Field 52 defines the center of the button sensing region 34. In this example, locations on touchscreen 18 are defined by a (X,Y) coordinate system with X representing the horizontal axis and Y representing the vertical axis and location (0,0) representing the lower left hand corner of touchscreen 18. However, other methods of defining locations on touchscreen 18 could be used without departing from the invention. Note that in this example since button sensing region 34 is a rectangle, it would not be necessary to include field 52 in button list 46 since it could be calculated from field 50 and field 51.

In one preferred embodiment, there are two types of button entries in button list 46 associated with the two types of buttons. Type 49 in the button entry indicates whether the button entry is associated with an adjusting button or a non-adjusting button. In one preferred embodiment, the locations that the user touches associated with adjusting buttons are used to calibrate the button sensing regions of subsequent non-adjusting buttons. In an alternative embodiment, the locations that the user touches associated with adjusting buttons are used to remap subsequent touched locations into the button sensing regions of non-adjusting buttons. In this example, buttons 20a and 20b are adjusting buttons, while buttons 20c, 20d, and 20e are non-adjusting buttons. In the preferred embodiment, adjusting buttons have button sensing regions that are larger than their associated buttons, and the button sensing regions for adjusting buttons do not move. In the preferred embodiment, non-adjusting buttons have button sensing regions that are the same size and shape as their associated buttons and the button sensing regions for the non-adjusting buttons are calibrated based on where the user touched on the adjusting buttons. However, the button sensing regions could be other sizes or shapes without departing from the invention.

In this example, button list 46 contains button entries 53, 54, 55, 56, and 57, which correspond to buttons 20a, 20b, 20c, 20d, and 20e, and button sensing regions 34a, 34b, 34c, 34d, and 34e, respectively. In one preferred embodiment, adjusting buttons are displayed to the user first, but adjusting and non-adjusting buttons could be displayed to the user in any order. Adjusting and non-adjusting buttons could share the same screen or be on different screens.

Factor list 47 contains the differences between the location that the user touched on an adjusting button and the center of button sensing region 34. In this example, factor list 47 contains two factors because there are two adjusting buttons in button list 46, each of which was touched once by the user. However, an application could have the user touch an adjusting button more than once, in which case there would not be a one-to-one correspondence between the number of factors in the factor list and the number of adjusting buttons in the button list.

In one preferred embodiment, adjustment factor 48 is set to be the average of all factors in factor list. However, other methods of setting the adjustment factor could be used, including using the mean of the factors or weighting the recent factors more than the remote factors.

The operation of one preferred embodiment, as shown in the flowcharts of Figs. 7-9, will now be described in more detail. Referring to Fig. 7, block 601 displays buttons on the touchscreen to the user. The number and configuration of the buttons displayed are dependent on the particular application that the user is accessing. When the user touches the touchscreen, block 605 determines the location that the user touched. Touchscreens are well known in the art that provide the coordinates of the touched location via sensors on the touchscreen such as light emitting diodes and photo detectors. This invention is independent of the method of touched location determination. Block 610 determines which button the user touched by calling the Determine Button Touched subroutine, which is described in detail in Fig. 8.

Referring to Fig. 8, block 701 gets a button entry from button list 46. Block 705 checks to see if this button entry is for an adjusting button. This check is accomplished by examining type field 49 in the button entry. If this button entry is an adjusting button and the location that the user touched is within the button sensing region for this button entry, blocks 705 and 710 are answered affirmatively. A new adjustment factor is computed by calling the Compute Adjustment Factor subroutine, which is described in Fig. 9.

Referring to Fig. 9, block 765 computes a factor from the difference between the center of the sensing region and the touched location. If block 770 determines that factor list 47 is full, the oldest factor from factor list 47 is removed in block 775. This is necessary because the memory available to store factors is finite. The newly calculated factor is inserted in factor list 47 in block 780. Adjustment factor 48 is set to be the average of all factors in factor list 47 in block 785. Although the preferred embodiment sets the adjust-

ment factor to the average of the factors in the factor list, alternative embodiments could use another method, such as giving recent factors more weight than remote factors or using the mean of the factors. Block 790 returns control from the Compute Adjustment Factor Subroutine to block 730 in Fig. 8. Block 730 returns an indication of which button was touched to block 615 of Fig. 7.

Referring to Fig. 8, if block 710 determines that the touched location is not within the sensing region for the button entry and if block 740 determines that there are button entries left in button list 46, then the next button entry in button list 46 is processed in block 701. If block 740 determines that there are no button entries left in button list 46, then the user has touched a location on the screen that is not associated with any button, so an indication that no button was touched is returned in block 735 to block 615 in Fig. 7.

Referring to Fig. 8, if block 705 determines that the button entry is for a non-adjusting button, then block 715 checks to see whether remap mode (alternative embodiment) or calibrate mode (preferred embodiment) is desired. If block 715 determines that calibrate mode is desired, block 717 sets the sensing region to be the button location modified by adjustment factor 48. If block 715 determines remap mode is desired, block 719 modifies the touched location by the negative of adjustment factor 48. If block 725 determines that the touched location is within the sensing region for the button list entry, then an indication of which button was touched is returned in block 730 to block 615 of Fig. 7. If block 725 determines that the touched location is not within the button sensing region for the button list entry, then if block 740 determines that there are button entries left in the button list, then the next button entry in button list 46 is processed in block 701. If block 740 determines that there are no button entries left in button list 46, then the user has touched a location on the screen that is not associated with any button, so an indication that no button was touched is returned in block 735 to block 615 in Fig. 7.

Referring again to Fig. 7, if block 610 returned an indication that a button was touched, then block 615 is answered affirmatively, so the appropriate processing is performed for the touched button by the application that the user is accessing in block 620. If block 610 returned an indication that no button was touched, then the user has touched a location on the touchscreen that is not associated with any button, so block 615 is answered negatively and block 625 displays an error message to the user. In either event, block 601 displays a new screen of buttons on the touchscreen.

While this invention has been described with respect to the preferred and alternative embodiments, it will be understood by those skilled in the art that various changes in detail may be made therein without departing from the spirit, scope, and teaching of the invention. For example, the type of applications that use a touchscreen may change from what is known today. In addition, touchscreen technology may become widely employed in consumer applications such as operator panels for consumer electronics, appliances, and automobiles. Accordingly, the herein disclosed invention is to be limited only as specified in the following claims.

Claims

1. A touchscreen apparatus for receiving instructions from a user, comprising:
means for displaying a first button on the touchscreen, the first button having a first sensing region;
means for receiving an indication that the user touched the touchscreen at a first location;
means for determining that the first location is within the first sensing region of the first button;
means for calculating an adjustment factor from the first button and the first location; and
means for displaying a second button on the touchscreen, the second button having a second sensing region calibrated from the adjustment factor.

2. The touchscreen apparatus of claim 1 wherein the calculating means further comprises:
means for computing the difference between the center of the first sensing region and the touched location.

3. The touchscreen apparatus of claim 1, further comprising:
means for receiving an indication that the user touched the touchscreen at a second location; and
means for determining that the second location is within the second sensing region.

4. The touchscreen apparatus of claim 3, further comprising:
means for calculating a second factor based on the distance of the second location from the center of the second sensing region;
means for computing an adjustment factor by taking the average of the first factor and the second factor; and
means for displaying a third button on the touchscreen, the third button having a third sensing region calibrated from the adjustment factor.

5. The touchscreen apparatus of claim 4, further comprising:
means for receiving an indication that the user touched the touchscreen at a third location; and
means for determining that the third location is within the sensing region of the third button; and
means for performing processing in response to the user pressing the third button.

9. The touchscreen apparatus of claim 1, 3 or 5, wherein determining means further comprises: means for detecting that said location is within said sensing region, but not within said button, and reporting that said button has been touched.

7. The touchscreen apparatus of claim 1, 3 or 5, wherein determining means further comprises: means for detecting that said location is within said sensing region and is also within said button, and reporting that said button has been touched.

8. The touchscreen apparatus of claim 1, 3 or 5, wherein determining means further comprises: means for detecting that said location is within said button but is not within said sensing region, and reporting that said button has not been touched.

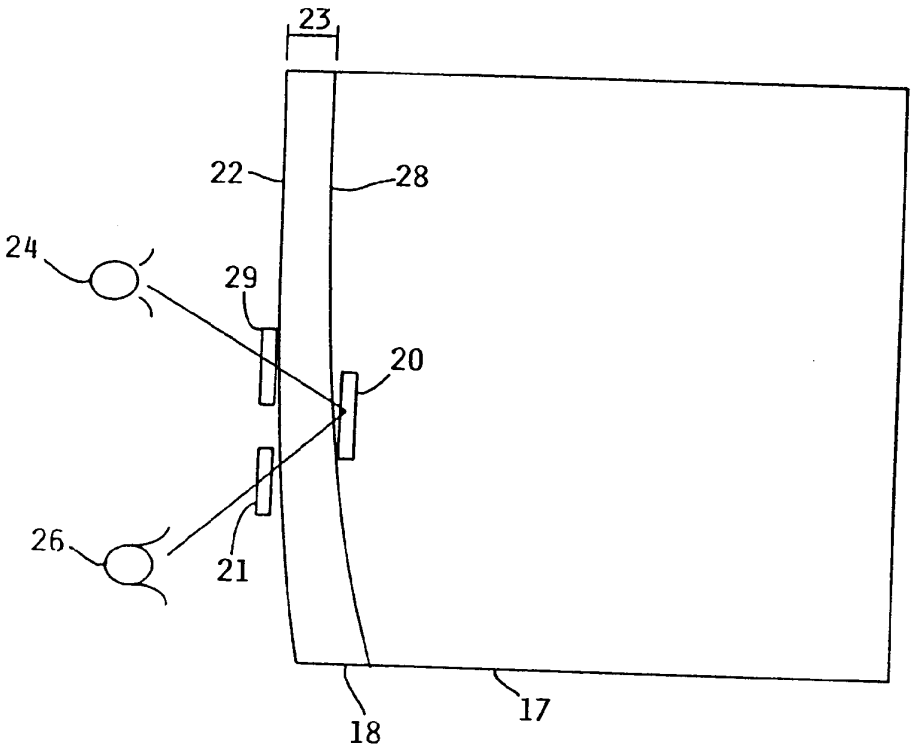

FIG. 1

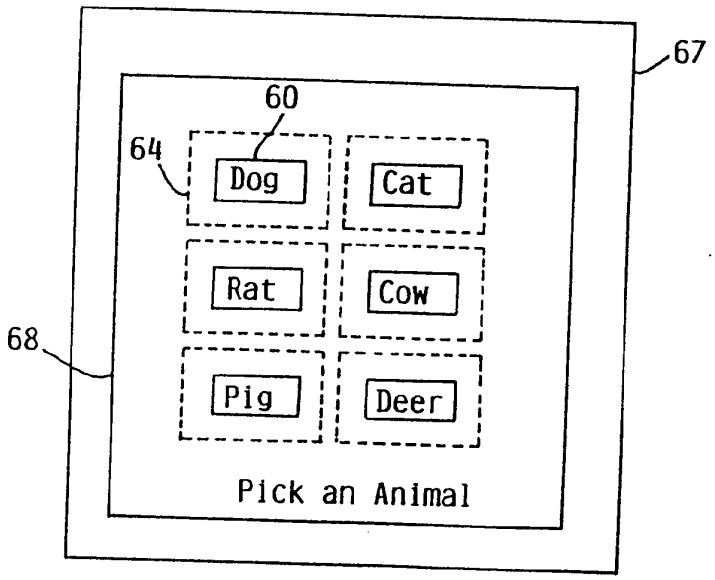

FIG. 2 (PRIOR ART)

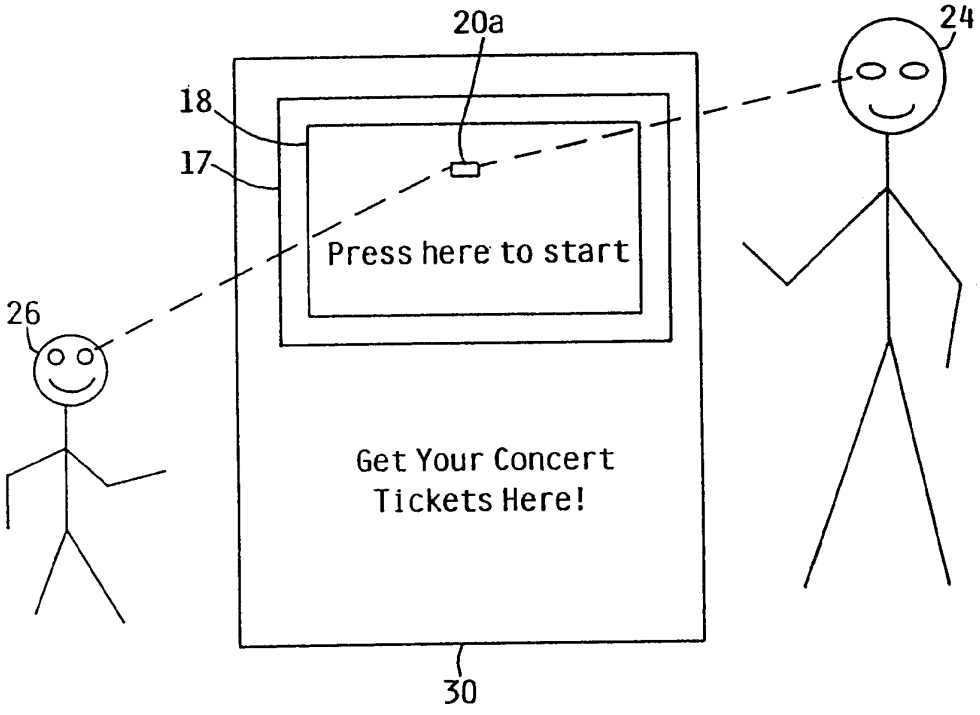
20a
24
18
17
Press here to start
26
Get Your Concert
Tickets Here!
30

FIG. 3

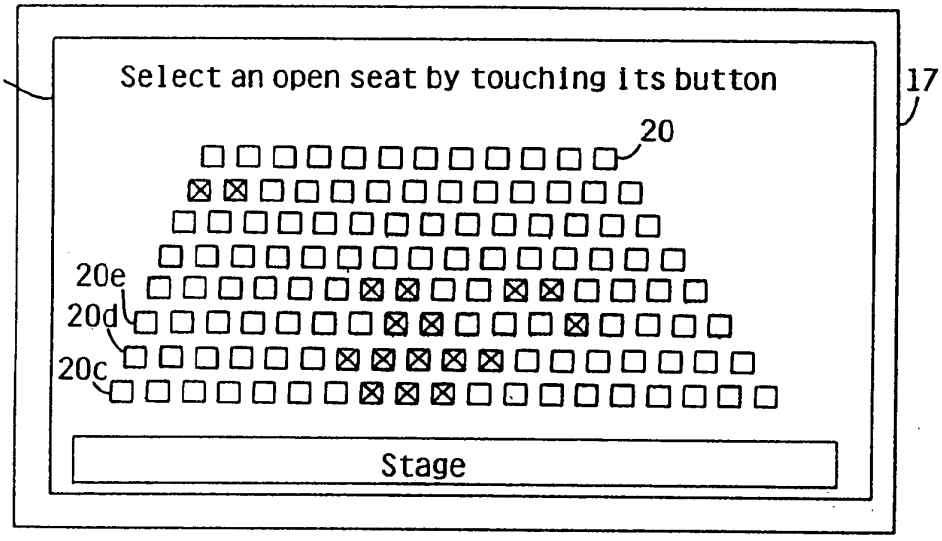
18
Select an open seat by touching its button
17
20
20e
20d
20c
Stage

FIG. 4a

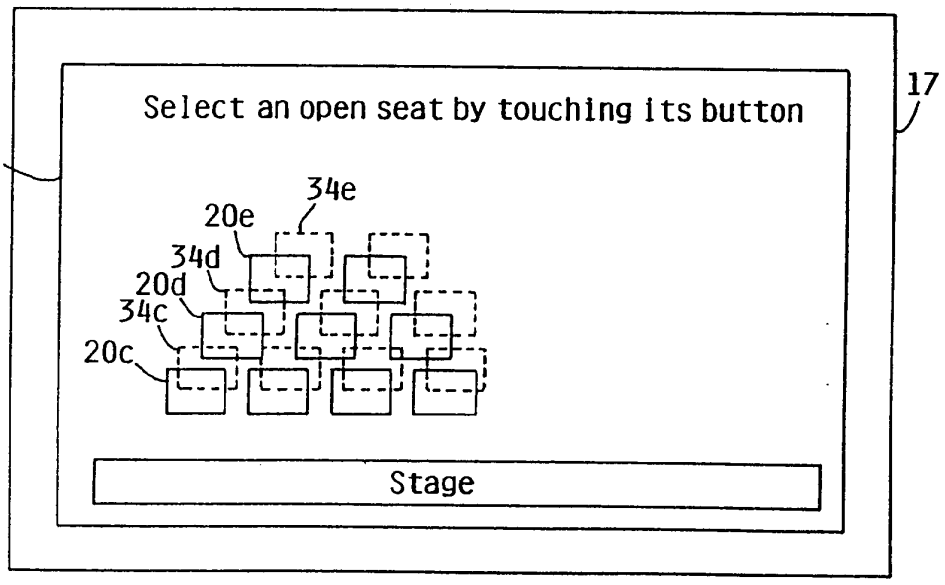
17
Select an open seat by touching its button
18
34e
20e
34d
20d
34c
20c
Stage

FIG. 4b

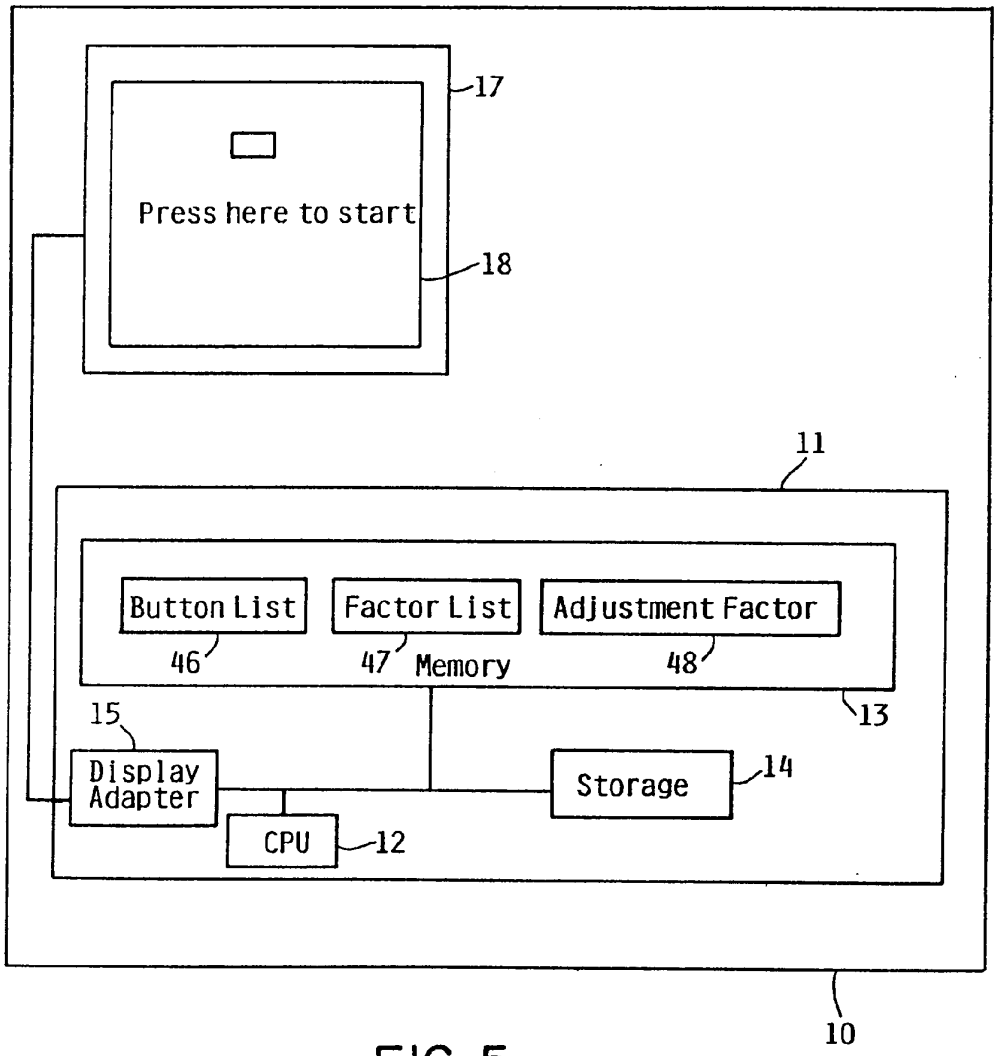
17
Press here to start
18
11
Button List
Factor List
Adjustment Factor
46
47
Memory
48
13
15
Display Adapter
Storage
14
CPU
12
10

FIG. 5

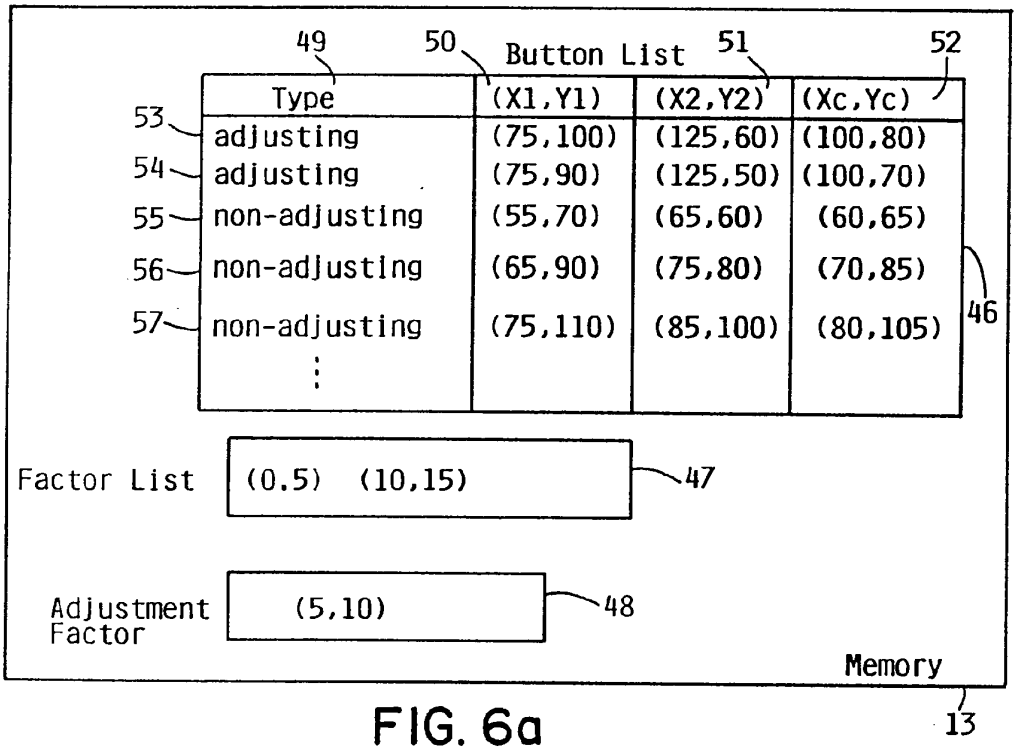
49
50
Button List
51
52
Type
(X1,Y1)
(X2,Y2)
(Xc,Yc)
53
adjusting
(75,100)
(125,60)
(100,80)
54
adjusting
(75,90)
(125,50)
(100,70)
55
non-adjusting
(55,70)
(65,60)
(60,65)
56
non-adjusting
(65,90)
(75,80)
(70,85)
57
non-adjusting
(75,110)
(85,100)
(80,105)
46
Factor List
(0.5) (10,15)
47
Adjustment Factor
(5,10)
48
Memory
13

FIG. 6a

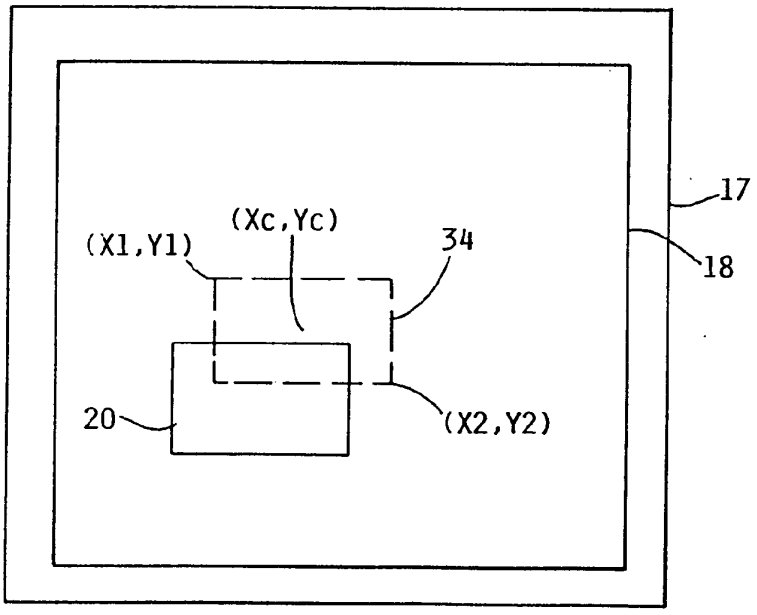
17
(Xc,Yc)
(X1,Y1)
34
18
20
(X2,Y2)

FIG. 6b

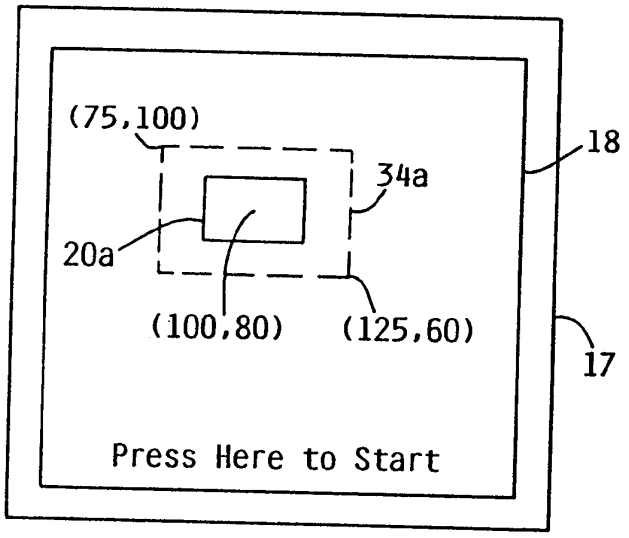
(75,100)
18
34a
20a
(100,80)
(125,60)
17
Press Here to Start

FIG. 6c

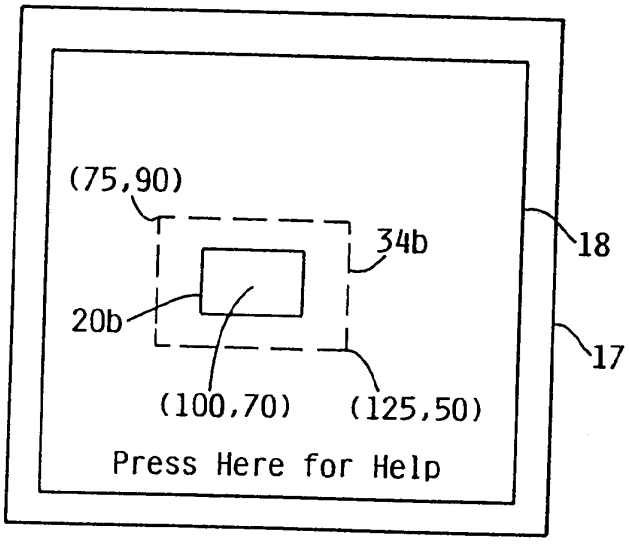
(75,90)
34b
18
20b
17
(100,70)
(125,50)
Press Here for Help

FIG. 6d

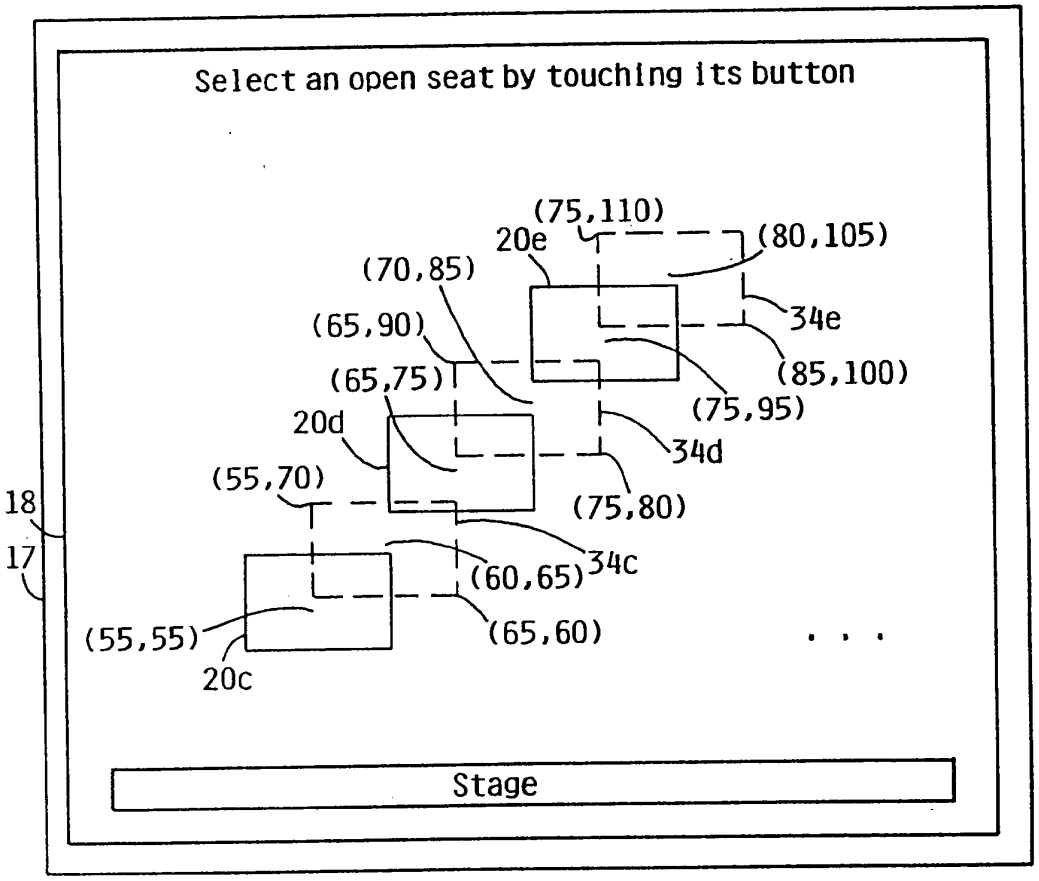
Select an open seat by touching its button
(75,110)
20e
(80,105)
(70,85)
34e
(65,90)
(85,100)
(65,75)
(75,95)
20d
34d
(55,70)
(75,80)
18
17
34c
(60,65)
(55,55)
(65,60)
. . .
20c
Stage

FIG. 6e

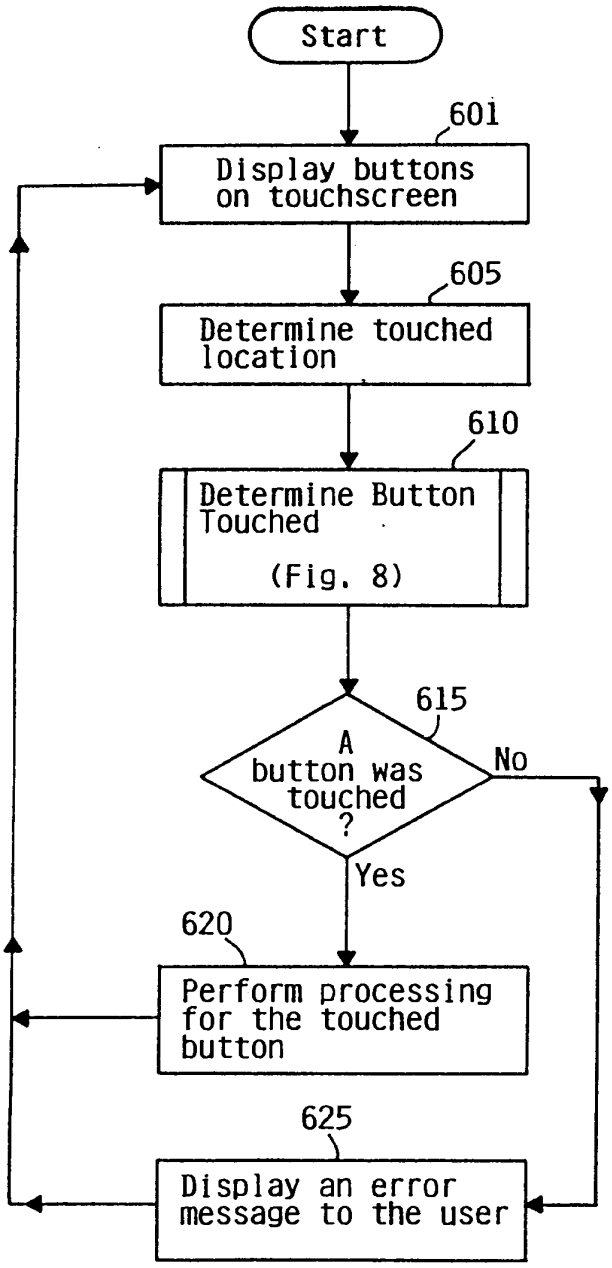

Display Touchscreen

FIG. 7

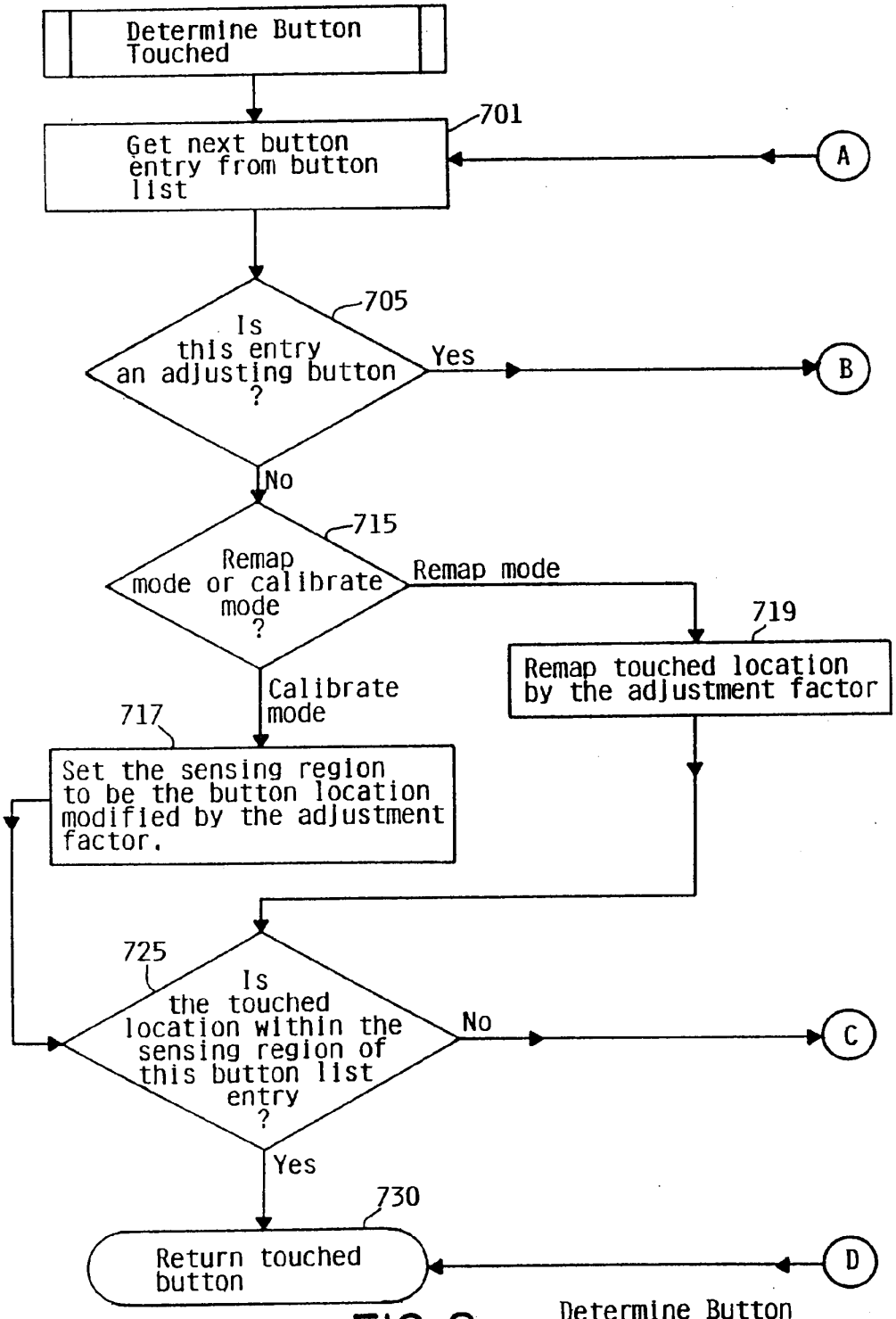

FIG. 8a Determine Button Touched Subroutine

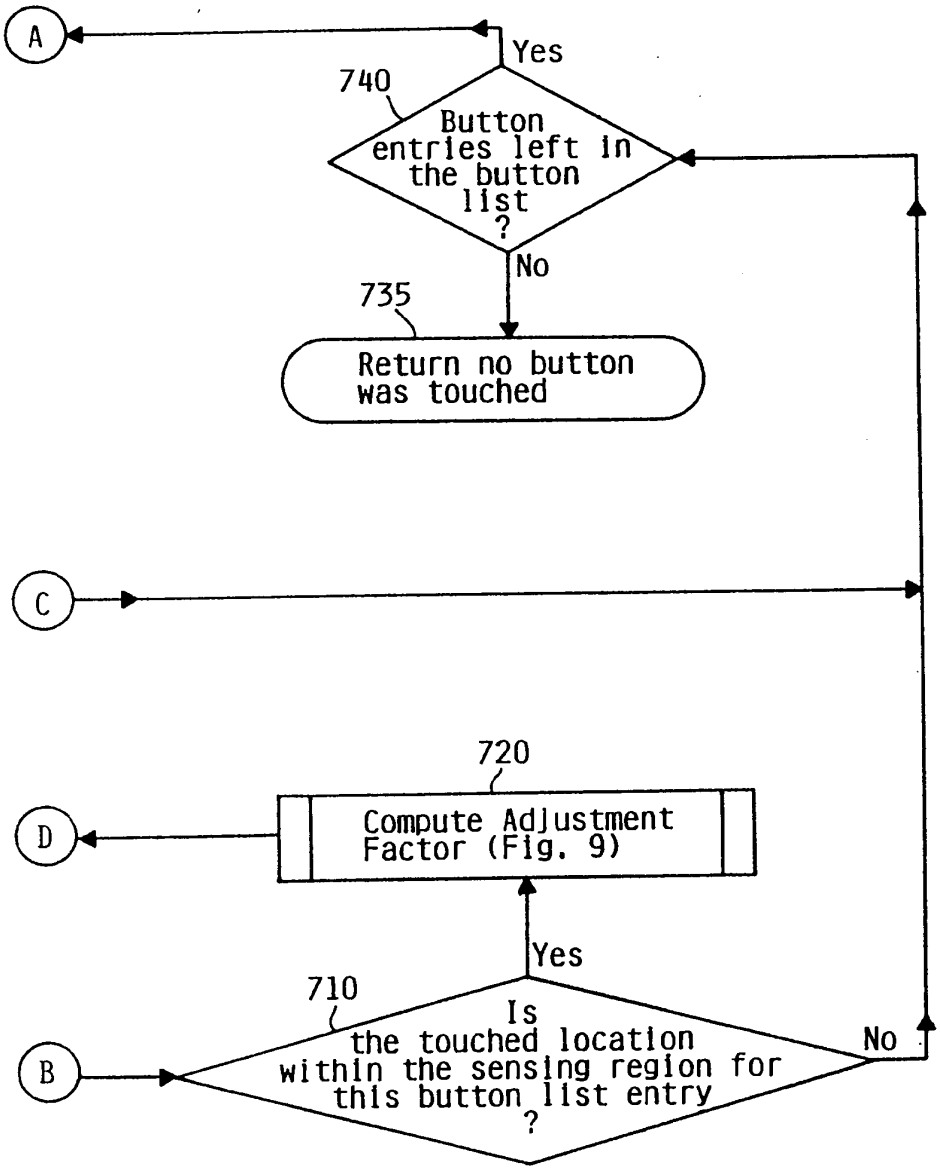

Determine Button Touched Subroutine

FIG. 8b

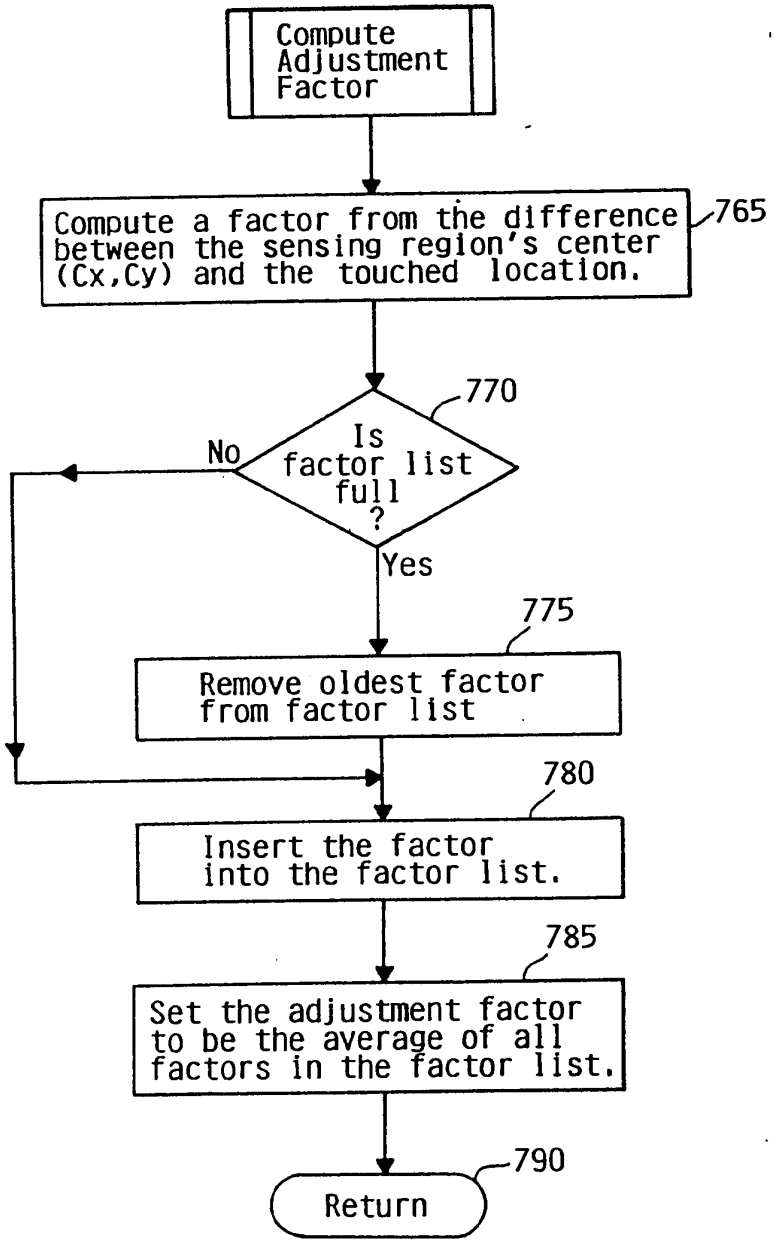

Compute Adjustment Factor Subroutine

FIG. 9

European Patent Office

EUROPEAN SEARCH REPORT

Application Number
EP 94 48 0019

DOCUMENTS CONSIDERED TO BE RELEVANT

Category	Citation of document with indication, where appropriate, of relevant passages	Relevant to claim	CLASSIFICATION OF THE APPLICATION (Int.Cl.5)
Y	IBM TECHNICAL DISCLOSURE BULLETIN vol. 32, no. 9B , February 1990 , NEW YORK US pages 250 - 253 XP82330 'METHOD TO IMPROVE THE USABILITY OF TOUCH-SCREEN PANELS FOR COMPUTER APPLICATIONS' * the whole document *	1-7	G06F3/033
Y	EP-A-0 324 306 (IBM) * column 3, line 27 - column 4, line 5 *	1-7	
A	IBM TECHNICAL DISCLOSURE BULLETIN vol. 33, no. 10A , March 1991 , NEW YORK US pages 223 - 227 XP110024 'ALGORITHM FOR DECREASING THE ERROR RATE OF DATA ENTERED ON A TOUCH SENSITIVE TERMINAL' * figure 4 *	8	
A	US-A-5 189 732 (KONDO H.) * column 3, line 10 - column 4, line 56 *	1,6,7	TECHNICAL FIELDS SEARCHED (Int.Cl.5) G06F

The present search report has been drawn up for all claims

Place of search	Date of completion of the search	Examiner
THE HAGUE	19 July 1994	Bailas, A

CATEGORY OF CITED DOCUMENTS

X : particularly relevant if taken alone
Y : particularly relevant if combined with another document of the same category
A : technological background
O : non-written disclosure
P : intermediate document

T : theory or principle underlying the invention
E : earlier patent document, but published on, or after the filing date
D : document cited in the application
L : document cited for other reasons

& : member of the same patent family, corresponding document

EPO FORM 1503 03.82 (P04C01)

(19) Europäisches Patentamt
European Patent Office
Office européen des brevets

(11) EP 0 703 525 A1

(12) EUROPEAN PATENT APPLICATION

(43) Date of publication:
27.03.1996 Bulletin 1996/13

(51) Int. Cl.[6]: **G06F 3/033**, G07C 1/30

(21) Application number: **95114749.5**

(22) Date of filing: **19.09.1995**

(84) Designated Contracting States:
DE FR GB IT

(30) Priority: **22.09.1994 JP 228466/94**
07.10.1994 JP 244373/94

(71) Applicant: **AISIN AW CO., LTD.**
Anjo-shi Aichi-ken 444-11 (JP)

(72) Inventors:
- **Kanemitsu, Hiroyuki**
  Shizuoka 410-11 (JP)
- **Morimoto, Kyomi**
  Nishio-shi, Aichi 445 (JP)
- **Suzuki, Yukiyoshi**
  Okazaki-shi, Achi 444-21 (JP)
- **Maekawa, Kazuteru**
  Nisikamo-gun, Aichi 470-02 (JP)
- **Asano, Hitoshi**
  Nagoya-shi, Aichi 457 (JP)

(74) Representative: **Pellmann, Hans-Bernd, Dipl.-Ing. et al**
Patentanwaltsbüro
Tiedtke-Bühling-Kinne & Partner
Bavariaring 4
D-80336 München (DE)

(54) Touch display type information input system

(57) A reaction area in a display can be enlarged from one directly above a switch display in the operator's eyesight direction. Specifically, the operator's position is determined from the driver's position or the like, and when the display is looked at to the right and upward, for instance, the reaction area is enlarged to the right and downward of a switch on the front side in the eyesight direction. Thus, operability can be improved in both cases when the display is looked at obliquely and diretly from the front.

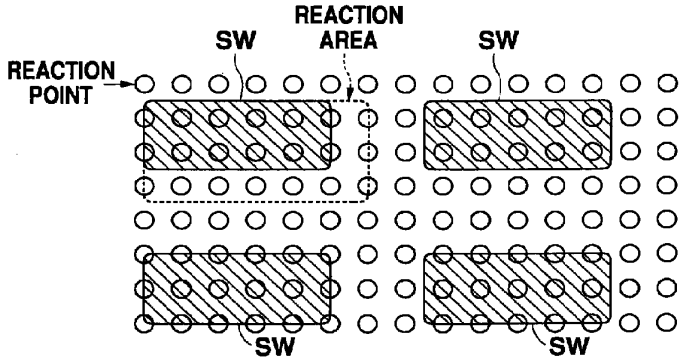

Fig. 8

EP 0 703 525 A1

Printed by Rank Xerox (UK) Business Services
2.9.13/3.4

Description

BACKGROUND OF THE INVENTION

Field of the Invention

This invention relates to a display touch type information input system for inputting operating information by detecting the touching of a switch displayed on screen.

Prior Art

Heretofore, radio sets, audio sets, air conditioners and many other accessory units which have no direct bearing on the running of vehicles have been mounted in vehicles, and there is a trend for an increasing number of these accessory units. Among these accessory units are navigation units, and vehicles with navigation units mounted therein are increas ing in number.

The navigation unit serves to assist driving by displaying the present location on a map, and there are many navigation units which undertake route guidance by displaying the route to a destination when the destination is input.

Such a navigation unit requires a display for the map display. In addition, various operations are necessary for the input of the destination and other purposes. However, the space available within a vehicle is limited, and it is impossible to provide exclusive switches for respective necessary operations. Usually, therefore, the display surface is utilized as a touch switch panel, that is, it is utilized as a switch. Also, there are many cases in which the same display is utilized as a switch for operating an air conditioner, an audio set, etc., thus dispensing with some of the dedicated switches.

There are many different types of touch switch panel, such as an electrostatic capacitance type, an optical type, etc. In many cases, however, irrespective of the type of touch switch panel used, the touch detection area is slightly above the actual display surface.

For example, in the electrostatic capacitance type, use is made of deformation of a film provided on the display surface, and in the optical type blocking of light beam provided along the display surface is detected. Therefore, the actual detection area is above the display surface. This leads to a problem that an error is produced between a switch displayed on the display and the actual detection position.

Particularly, in the optical type an acrylic acid resin sheet for screen protection and an LCF (light control film) for suppressing reflection of light by the screen surface are provided between the switch display on the screen and a detection light beam. The thickness thus provided constitutes a corresponding distance between switch display and reaction point. In the optical type, therefore, the problem noted above is particularly pronounced.

Meanwhile, the display that is provided in the vehicle can not be disposed right directly in front of the driver's seat. That is, it has to be disposed at an intermediate position between the driver seat and the passenager seat. Inevitably, therefore, the driver's eyesight is directed obliquely with respect to the display. This leads to an error between the switch display on the display and directly above the touch reaction point (shown shaded), as shown in Fig. 1, and it is impossible to obtain correct detection of the driver's point of touch.

Japanese Utility Model Publication No. 121641/1987 shows precluding the deviation between display switch and reaction area due to a deviation of the driver's eyesight direction by shifting a switch display position (i.e., the whole display on the screen) according to the operator's position. Particularly, in a system disclosed in this publication seating detection switches are provided on the driver and passenger seats, and the switch display position is shifted by specifying the operator from the status of the seating detection switches. More specifically, when the driver alone is present, the display position is shifted to the left, while when both the driver and a passenger are present it is held at the center.

In this prior art example, however, sufficient improvement is not made because what is done is merely to shift the display itself. For example, there is such a problem that when the system is operated with the driver's face brought to the front right of the display, sufficient reaction can not be obtained due to a display deviation.

Particularly, while the touch of the touch switch panel is detected with respect to a plurality of spaced-apart reaction points, the reaction points can not be arranged very closely. Therefore, where a plurality of switches are displayed, the switch display may be comparatively small, and the number of reaction points of the switch display may be considerably small. By way of example, where the area defined by reaction points and the shape of switch display are in accord as shown in Fig. 2, the effect of the eyesight deviation is not so much. However, there is a case when the switch display and reaction points are deviated as shown in Fig. 3. In this example, while switches a and b are equal in size, the switch a is constituted by two reaction points, while the switch b is constituted by four reaction points. In such a case, if the eyesight direction is oblique with respect to the switch a, there is a high possibility that reaction points which do not belong to the switch a are operated by the driver's finger. If this is the case, sufficient reaction can not be obtained.

SUMMARY OF THE INVENTION

An object of the invention is to provide a screen touch type information input system, which can realize sufficient improvement in operability.

In the screen touch type information input system according to the invention, a reaction area corresponding to a display switch is enlarged from the consideration of the operator's eyesight direction. It is thus possible to increase the accuracy of detection of switch operation made by looking at the display obliquely, while maintain-

ing the operability when the display is viewed from the front right thereof.

Further, it is possible to attain sufficient reaction area enlargement with respect to the eyesight direction in a range free from erroneous operation by determining the extent of enlargement from consideration of the distance between adjacent switch displays.

In a further aspect, in a screen display in a vehicle, there are switches which can not be operated during driving of the vehicle. When such a switch is present as an adjacent switch, the reaction are is enlarged to a somewhat greater extent from the consideration of this fact. Thus, it is possible to improve the switch operation recognition factor.

Further, reaction area enlargement in the case of the presence of a switch which can not be operated during driving of the vehicle, as an adjacent switch is made even when no consid eration is given to the eyesight deviation. Again in this case, the switch operation recognition factor can be improved.

Further, where a switch operable in the parked state of a vehicle is always found on the eyesight direction side of an operated switch, the reaction area is effectively enlarged in the eyesight direction.

BRIEF DESCRIPTION OF THE DRAWINGS

Fig. 1 is a view showing the relationship between eyesight direction and reaction points;
Fig. 2 is a view showing an example of the relationship between switch display and reaction points;
Fig. 3 is a view showing different examples of relationships between switch display and reaction points;
Fig. 4 is a block diagram showing an embodiment of the invention;
Fig. 5 is a view showing a touch panel;
Fig. 6 is a view showing an array of reaction points in a touch panel;
Fig. 7 is a flow chart illustrating the operation of the embodiment;
Fig. 8 is a view showing an example of enlarging a normal reaction area;
Fig. 9 is a view showing an example of enlarging a reaction area with consideration of inter-switch interval;
Fig. 10 is a view showing an example of enlarging an area in the case when the use of an adjacent switch is prohibited;
Fig. 11 is a flow chart illustrating operation in the case when there is a switch, the use of which is prohibited;
Fig. 12 is a view showing an example of display in the case when there is a switch, the use of which is prohibited;
Fig. 13 is a schematic showing the entire system structure;
Fig. 14 is a flow chart illustrating the operation of the embodiment;
Fig. 15 is a view showing a storage state of a memory;
Fig. 16 is a view showing a destination setting method choice display;
Fig. 17 is a view showing a facility name choice display;
Fig. 18 is a view showing a prefectural district list display;
Fig. 19 is a view showing a facility list dislay;
Fig. 20 is a view showing a facility neighborhood map display;
Fig. 21 is a view showing a position change display;
Fig. 22 is a view showing a search condition confirmation display;
Fig. 23 is a view showing a passing point setting display;
Fig. 24 is a view showing another search condition confirmation display;
Fig. 25 is a view showing a mute search state display;
Fig. 26 is a view showing a whole route guide display;
Fig. 27 is a view showing a route guide state display;
Fig. 28 is a view showing a guide display in the case of departure from the route;
Fig. 29 is a view showing an enlarged-scale intersection neighborhood display;
Fig. 30 is a view showing a guide road list display;
Fig. 31 is a view showing a route change display;
Fig. 32 is a view showing a route correction display; and
Fig. 33 is a view showing a destination arrival guide display.

DETAILED DESCRIPTION OF THE PREFERRED EMBODIMENT

Now, an embodiment of the invention will be described with reference to the drawings. The overall structure of the embodiment is shown in the block diagram of Fig. 4.

As shown, the embodiment of the system comprises a touch panel 10, which includes an LCD display 10a and an optical touch panel 10b provided on the surface of the LCD display 10a. The LCD display 10a is connected via a driver 20 to a display ECU (elec tronic control unit) 22. The display ECU impresses a predetermined voltage via the driver 20 on liquid crystal of the LCD display 10a at a desired position thereof for display. The touch panel 10b is also connected to the display ECU 22, and it detects touch to some of the reaction points arranged in a matrix array.

A main ECU 30 is connected to the display ECU 22. According to a signal from the main ECU 30, the display ECU 22 determines the contents of display on the LCD display 22. In this embodiment, the main ECU 30 feeds an RGB signal (i.e., color television signal) about the display on the LCD display 10a, and according to this signal the display ECU 22 controls the voltage output of the

driver 20 to obtain a desired color display. Meanwhile, on-off information (i.e., touch information) about the individual reaction points on the touch panel 10b is directly transmitted to the touch panel 10b. The main ECD 30 detects an on-off state of the display switch from the display on the LCD display 10a and reaction point on-off information.

In this embodiment, the display and touch detection are made on the display ECU. However, it is possible that such processes are executed by the main ECU 30. As a further alternative, a separate ECU may be provided, which executes only the processes of touch detection and judgment. As a yet further alternative, a logic circuit for touch judgment may be constructed by hardware.

To the main ECU 30 are connected a GPS (grobal positioning system) 32 for detecting the absolute position (i.e., latitude, altitude and height) of the vehicle by receiving radio waves from an artificial satellite, a CD-ROM 34 for reproducing optical disk with map information stored therein, a vehicle speed sensor 36 for detecting the running speed of the vehicle, a geo-magnetic sensor for detecting the bearing of the vehicle, and a parking switch 40 for detecting the parking state of the vehicle.

The main ECU 30 thus feeds signals concerning about display by determining the present position from the absolute position detected by the GPS 32 and covered distance obtained from the vehicle speed and geomagnetism sensors 36 and 38, etc. and determining the content of display on the LCD display 10a from a map obtained from the CD-ROM 34, etc. Further, when displaying switches to be operated, the main ECU 30 determines the relationship between display switch and reaction points on the touch panel 10b. Further, a TV tuner is connected to the main ECU 22. It is thus possible to produce a TV display on the LCD display 10a. Further, it is possible to operate an air conditioner, etc. with the touch panel 10.

The optical touch panel 10b in this embodiment is shown in Fig. 5. It has light-emitting and light-receiving element rows disposed around the LCD display 10a. More specifically, along the right and upper side of the LCD display 10a a plurality of infrared LEDs (light-emitting diodes) 12 are provided in a row. Along the left and upper sides a plurality of photo-transistors 14 are provided in a row. Infrared radiation from the light-emitting diodes 12 is thus received by the respectively opposing photo-transistors 14.

By touching the LCD display 10a with a finger, certain light beams are blocked by the finger. Two-dimensional coordinates of the finger are thus specified from the positions of the photo-transistors 14 which can no longer receive light.

Thus, the light-emitting diodes 12 and light-receiving transistors 14 form a matrix of a corresponding number of reaction points as shown in Fig. 6. In the example of Fig. 6, 13 by 13 = 169 reaction points are formed.

The main ECU 30 sets the reaction area of a switch displayed on the LCD display 10a in correspondence to the shape of the switch. It detects the touch to the reaction points in the reaction area to determine the on-off state of the switch.

The detection of the on-off state of switch will now be described with reference to the flow chart of Fig. 7. In this example, the area directly above the display of the switch is set directly as a reaction area, and the reaction area is enlarged in the judging process.

First, when the touch panel 10b is touched in the presence of the switch display (step S11), the Nos. (1 to 169) of the touched reaction points are detected by the display ECU 22 and taken in to the main ECU 30 (step S12).

Then, the main ECU 30 checks whether there is any meaningless a reaction point (i.e., a reaction point not corresponding to any reaction area) (step S13). If no meaningless reaction point is found, it is determined that a switch corresponding to meaningful reaction point (i.e., reaction point corresponding to a reaction area)has been operated (step S14).

There is always one meaningless reaction point between two adjacent switches.

Usually, there is no possibility that a reaction point corresponding to two switches will be touch in the absence of any meaningless reaction point. There may occur a converse state due to such cause as touching the touch panel 10 with two fingers. Such a state may be regarded to be an abornal switch operation or to be an absence of switch operation.

If a meaningless reaction point is found in the step S13, a check is made as to whether there is any reaction point in a reaction area corresponding to a switch (step S15).

If no such reaction point is detected, it is determined that a switch of a reaction area located at a reaction point of the No. smaller by one than that of the touched meaningless reaction point (i.e., a reaction point on the left side of the touched meaningless reaction point) has been touched (step S16). The left side reaction point is selected on the assumption that the operator is the driver seated in the right side seat. If it is known that preference is given to the left side seat, a switch of the No. larger by one (i.e., right side reaction point) may be determined. With the left end reaction point, this process is null because the reaction point with a No. smaller by one is on the right end. In many cases of usual operation, there is only a single switch located on the left side of a meaningless reaction point. When there are two or more such switches, the numbers of reaction points corresponding to these switches may be referred to for verification.

If it is found in the step S15 that there is a reaction point in a reaction area corresponding to a switch, the numbers of such reaction points and meaningless reaction points are compared (step S17). If the number of reaction points in the reaction area corresponding to the switch is greater, it is determined that the switch corresponding to these reaction points has been operated (step S18).

If it is found in the step S17 that the number of meaningless reaction points is greater, a check is made of the

position relationship between the meaningless reaction points and the reaction area corresponding to the switch (step S19). According to the result of this check, switch operation is determined as follows. If the meaningless reaction points are located under a reaction area corresponding to a switch, it is determined that a switch immediately over the meaning reaction points has been operated (step S20). If the meaningless reaction points are located over the reaction area corresponding to a switch, it is determined that a switch immediately under the meaningless reaction points has been operated (step S21). If the meaningless reaction points are located on the right side of the reaction area corresponding to a switch, it is determined that a switch on the immediate left side of the meaningless reaction points has been operated (step S22). If the meaningless reaction points are located on the left side of the reaction area corresponding to a switch, it is determined that a switch on the immediate right side of the meaningless reaction points has been operated (step S23). The result of the check of the position relationship in the step S19 may be from a map or from operational processing of arithmetic formulas.

In the above way, the touch to a meaningless reaction point may be regarded to be the touch to a nearby reaction point. In the above flow, initially an area directly over a switch display was set directly as a reaction area, and the reaction area was changed when and only when the touch to a predetermined meaningless reaction point was detected. In this way, various reaction areas can be comparatively readily set. In addition, it is comparatively readily possible to set a reaction area afresh.

However, the main ECU 30 has internally memorized display switch positions, and it is possible to set a reaction area to an enlarged scale in advance. Further, it is possible to further enlarge a reaction area in the manner as shown in Fig. 7 as described at the time of detection of the touch to a meaningless reaction point in a check executed after the setting of the enlarged reaction area.

In the case of vehicles, the operator is usually the driver. Thus, the driver should be assumed to be the operator unless otherwise specified. In this case, it is effective to enlarge a reaction area not in all directions but in a particular direction only. In this case, reaction areas may be allotted to displayed switches as shown in Figs. 8 to 10.

When the eyesight is directed from the right and downward with respect to the switch arrangement displayed on the LCD display 10a, as shown in Fig. 8, a reaction area is set which includes the entire top of the display switch and is enlarged to the right and downward. The touch of a reaction point in this reaction area is judged to be a switch operation. With such enlargement of the reaction area it is possible to preclude the error between the reaction points and the switch arrangement display when viewed from the operator, and the switch operation can be effectively detected. In addition, since the reaction area is merely enlarged, correct detection can also be obtained when the switch operation is made with the operator's face brought to the front of the screen.

When the display switch interval is comparatively large as shown in Fig. 9, the enlarged reaction area is made greater according to the interval. This is done because the possibility of erroneous detection due to reaction area enlargement is low. By determining the extent of reaction area enlargement according to the display switch interval, the switch operation can be detected more effectively.

In a navigation display or the like, switches which can not be operated during driving are also displayed. In a specific example, the setting of a destination or the like is made according to the input of the kind of destination (such as department store, golfing place, station, etc.), address, telephone No., etc. Such an operation is comparatively complicated and is executed by watching the display. During driving of the vehicle, such a switch is displayed in thin form (as shown shaded in the Figures) so such as it can not be operated. If such a switch is operated, the operation is made null, while displaying a message that "the switch can not be operated during driving of the vehicle, so please use the switch after parking." Thus, with such a display the possibility of operating a switch which can not be operated is low.

Accordingly, in this embodiment the reaction area is further enlarged as shown in Fig. 10, so that the enlarged reaction area of the switch covers up to reaction points adjacent to a switch which can not be operated during driving of the vehicle.

More specifically, where two adjacent switches are operable, it is necessary to avoid erroneous judgment by setting at least one line of reaction points between the two switches, which reaction points belong to neither of the switches and are hence meaningless. However, if the adjacent switch is not operable, the switch operation recognition factor can be increased by allotting all the reaction points between the two switches to the reaction area of the operable switch.

Now, operation during driving of the vehicle will be described with reference to Fig. 11. When a destination display is produced by choosing a destination setting during driving, any inoperable switch is torn down (step S31). Specifically, of the display switches as shown in Fig. 12 the "TELEPHONE NO." switch for setting the destination from a telephone No., the "ADDRESS" switch for setting a destination from an address, facility name switches for setting a destination from a facility name, the "MEMORIZED POINT" switch for setting destination among memorized points, and a "PREVIOUS DEPARTURE POINT" switch are toned down. Thus, only the "HOME" switch is held operable without toning it down. (In the Figure, only the "HOME" switch is shown shaded). This is done because-the destination can be set by merely touching the "HOME" switch, the operation being thus simple and capable of execution without any trouble during driving. Afterwards, the area covering the reaction points corresponding to the operable switch is enlarged (step S32).

The running state of the vehicle may be detected with reference to zero vehicle speed. In the case of an automatic vehicle, the parking position of a shift lever may be detected using a parking position switch 40. Further, the parking state of the vehicle may be detected through detection of an "on" state of the side brake. Further, the routine shown in Fig. 11 is called by an interrupt when the running state of the vehicle is detected.

In this embodiment, it is a presumption that the display itself is fixed. However, among various available displays are those which are capable of angle adjustment. That is, there are displays which can be directed toward the driver's seat in some cases and toward the passenger seat in other cases. With such a display, whether the operator is the driver or the passenger can be determined from the display installation angle. It is thus possible to provide a display position detector (which may detect rotation of the display as the display is usually rotated about its center line) and determine the reaction area enlargement direction by specifying the operator according to the result of detection.

The method of the operator's eyesight direction estimation is not limited to the above display angle adjustment, and the same effects are obtainable with other methods.

A conceivable different method, for instance, is such that an "PASSENGER SEAT OPERATION" key is displayed, and that if this key is touched, it is determined that the operator's eyesight direction is from the passenger seat.

(Description of another structural embodiment)

Now, another structural embodiment of the invention applied to a navigation system will be described. This structural example concerns a map call/display system for a navigation system, which can call and display maps concerning specified items of call.

Usually, driving carried out to various destinations. When utilizing a navigation system, it is accordingly necessary to input and set information about the destination. It is possible to memorize a place which recurrently constitutes the destination, such as home, place of work, etc. As for general destinations, however, it is necessary to set information whenever a specific destination is chosen. In the usual navigation system, a map of the neighborhood of a destination is called and displayed for determining the final destination when information of a place as an indication of for destination setting is input or for confirming destination when information of the final destination is input. For other purposes than the destination setting, it is possible to call and display desired maps by inputting place-specifying information.

A map may be called by specifying a facility name such as a golfing place name, a station name, etc., specifying a telephone No. or an address, or specifying a memorized place as noted before. Prior art navigation systems can call maps according to such input. As an example, when the home of an acquaintance which is located behind a certain golfing place is chosen as a destination, first the name of the golfing place is input as a facility name. Then, a map of the neighborhood of the golfing place is called and displayed. On the displayed map, the final destination is set, and a route search is made.

When setting a destination according to a telephone No. or an address, a pertinent map may be called and displayed by inputting comparatively rough information, such as a city name, an urban telephone exchange name, etc., and the final destination may be set on the displayed map.

However, a map which is called in the above way according to the input information may sometimes be of a scale which is not suited to the setting of the final destination. For example, the same scale of display is not suitable when calling a private shop having a small installation area and when calling a golfing place having a vast area. In other words, if the map showing the golfing place is called with a scale that permits adequate display of the private shop, the called map can not be contained within the screen.

According to Japanese Patent Laid-open Publication No. 94132/1993, if the called map can not be contained within the screen, this is displayed, and the direction in which the locality that can not be displayed is present is displayed with an arrow. In this case, it is made possible to scroll the screen in the direction of the arrow. Thus, when the called subject is not satisfactorily displayed, it is possible to permit observation of the whole subject. It is thus possible to permit the setting of destination or the like by utiliizing the called map.

In the above prior art example, however, it is necessary to scroll the display in order to observe the whole subject called. Therefore, the operability is inferior. For example, when setting a destination, scrolling of the display is needed to obtain information of nearby roads and so forth. Further, when the destination is an acquaintance's house behind a golfing place as noted above, difficulty may be encountered in the search of the destination due to absence of the intended location in the display or lack of the display of the whole golfing place.

The instant structural example seeks to solve the above problems.

Fig. 13 is a schematic showing the entire structure of the example of a map call/display system. A display/touch system 110 as shown serves as map display means.

It includes an LCD (liquid crystal display) and a touch panel provided on the surface of the LCD. In addition to displaying various maps, it also has a role of detecting the touching of a displayed switch. An electro multi-television ECU 112 is connected to the dislay/touch panel 110. The electro multi-television ECU 112 has roles of providing displays and detecting the touching of the touch panel. A CD-ROM changer 114 is connected to the electro multi-television ECU 112. A map CD-ROM 114b is connected via magazine 114a to the CD-ROM

changer 114. The map CD-ROM 114b serves as memory means for storing map data. The electro multi-television ECU 112 serves as map call means for obtaining desired map information from the CD-ROM changer 114.

A GPS receiver 120 is connected to the electro multi-television ECU 112. The GPS receiver 120 receives signals from an artificial satellite via a GPS antenna 120a to detect the absolute position (altitude and latitude) of the vehicle and supplies detection data to the electro muilti-television ECU 112. The absolute position of the vehicle can thus be detected in the electro multi-television ECU 112. Various sensors 122 for detecting the running state of the vehicle are connected to the electro multi-television ECU 112. The running condition thus can be ascertained at all times. In this example, the sensors 122 are a geo-magnetism sensor 122a, a wheel sensor 122b, a steering sensor 122d and a distance sensor 122d. The electro multi-television ECU 112 can thus grasp the bearing, speed and steering angle of the vehicle and distance covered thereby from the results of detection by the sensors 122. The electro multi-television ECU always calculates the present position from the detection signals from the sensors 122, and makes higher accuracy detection of the present position by combining the result of detection from the GPS receiver 20 with the calculated present position.

The electro multi-television ECU 112 is further supplied with detection signals from various switches 124. In this example, signals from an accessory switch 122a, an ignition switch 124b, a parking brake switch 124c, an alternator 124d and a check terminal 124e are supplied to the electro multi-television ECU 122. Thus, the electro multi-television ECU 112 can ascertain running conditions of the vehicle, such as whether the ignition key is "on", whether the vehicle is parked with the parking brake operated, whether the electricity generation state is satisfactory, and whether various accessories mounted in the vehicle are normal.

Further, a loudspeaker 126 is connected to the electro multi-television ECU 112. A guidance voice for route guidance is output from the loundspeaker 126.

Further, in this system a TV tuner 130 is provided to permit display of a television signal intercepted by a TV antenna 130a built into the window glass on the screen of the display/touch panel 110. An air conditioner ECU 132 is further connected to the display/touch panel 110.

The air conditioner can thus be operated by a switch displayed on the display/touch panel 110.

Further, the system includes an audio CD changer 134b for reproducing data from a CD-ROM 134c. CD-ROM 134c data for sight-seeing guides, etc. is stored.

Thus, video data can be supplied from the CD-ROM 134c to the electro multi-television ECU 112 to display sight-seeing guide displays on the display/touch panel 110. Further, voice data from a music CD 134b and CD-ROM 134c can be supplied through an audio amplifier 136 to loudspeakers 138 to output predetermined voices. Further, an audio head unit 140 is connected to the audio amplifier 136 to permit signals from an FM radio unit, an AM radio unit, etc. to be output to the loudspeakers 38.

Now, the above system will be described in connection with reading out a map for destination setting with reference to Fig. 14. In this case, information for the destination setting is first input by operating the display/touch panel 110. As an example, it is assumed that the destination is set according to an address. For example, information "Toyoda City, Akita Prefecture" is input, and it is determied to be the final choice item (step S101).

According to this input, the electro multi-television ECU 112 determines the center position of the input "Toyoda City" and the scale of the display from data stored in the map CD-ROM 114b (step S102). As the center position adopted may be the center position of the area (i.e., administrative area) of Toyoda City, the location of the administrative office of the city, etc. The scale of the display has been determined from the area and shape of the pertinent city (i.e., Toyoda City in this case), and this information has been stored. When displaying the area, a scale is required which permits maximum enlargement of the area without a non-display portion. This data is stored together with data of the item (i.e., Toyoda City in this case) in the CD-ROM 114b.

When the final choice item is determined in the step S101, the data has already been read out from the CD-ROM 114b into a memory of the electro multi-television ECU 112.

An example of the configuration of this data is shown in Fig. 15. As shown, the group name, name (i.e., kanji name in the case of a Japanese name), altitude and latitude of the destination and the scale of the display are stored. As the scale of display one is stored which is best suited, in both the altitude and latitude scales to the display of the area as described above. The group is the kind of item, such as golfing place, amusement park, etc. (corresponding to the facility name), and it represents the kind of call subject together with the name. In this way, the scale of display is stored in the CD-ROM as shown in Fig. 15. However, it is also possible to provide a ROM in the ECU 112 and store a table listing call subject kinds and display scales in one-do-one correspondence in the ROM. In this case, the data amount in the CD-ROM 114b may be reduced.

Since the center position of display and the display scale are determined in the above way, the pertinent map data are read out (step S103). The read-out map data are displayed on the display/touch panel (step S104).

As shown, in this example the best suited display scale is determined according to the kind of final choice item as determined in the step S101. If the final choice item determined in the step S101 is not at the level of city, town or village but specifies the address, the display scale is determined under the assumption that the area of the pertinent address is to be displayed. If an urban telephone exchange No. or a golfing place name is specified, a display scale corresponding to the final choice item is read out. Thus, the map call is always made on

the basis of the best display scale, and the best map display is carried out.

For example, if a golfing place is displayed on a map with a scale of 1/100,000, it is partly displayed on the screen. When such a display is provided, the operator wishes to search for a desired place, for instance a club house parking area, in the golfing place. Previously, if the club house parking area be found correctly, the destination could be set correctly.

However, if the destination could not be found, it would be set to be a different place, for instance a parking area on the opposite side of the club house. Meanwhile, in this navigation system, when merely the name of the golfing place is specified, the destination is usually set to be the club house parking area which the general driver decides to be the destination. This means that by setting the destination directly on the display, correct destination setting can be obtained. In this example, the golfing place as a destination is set in an optimum size, i.e., a size which is not excessively large or small.

The destination setting can thus be completed at a level intending to find golfing place. In other words, the destination setting can be obtained without a change in the predetermined club house position. In this way, in this example correct destination setting can be obtained.

It will be seen that there is a correlation between the display scale and the operator's sense. When the operator wishesdesires to obtain display of a map in a certain scale, he or she obtains information which is available from that scale. In other words, for a detailed map detailed information is sought, while for a broad area map only a very rough positional relationship is sought. Thus, by obtaining display of a map in a scale adequate for the size and shape of the subject as in this example, the operator can confirm only the presence of the pertinent facility or the like, and he or she can promptly carry out correct destination setting without the need to set greater details.

Now, the actual operation of the navigation system will be described with reference to display examples. It is assumed that the set destination is among "OTHER FACILITIES" and that a point is set which has been set in advance as a memorized point on the route to the destination.

(Setting of Destination)

Fig. 16 shows a display for choosing a method of destination setting. As shown, the display includes "TELEPHONE NO." and "ADDRESS" keys. It also includes "GOLFING PLACE" and "OTHER FACILITIES" keys for facility names (or groups). It further includes "HOME", "MEMORIZED POINT" and "PREVIOUS DEPARTURE POINT" keys for registered points. When this display is provided, a navigation message saying "You can call and set a map of destination neighborhood from telephone No. or facility name." is produced. In this example, the "OTHER FACILITIES" key is touched. As a result, a destination facility name choice display as shown in Fig. 17 is provided. At this time, a navigation message saying "Please choose destination facility name." is also produced. The operator thus chooses and touches a desired key among "AMUSEMENT PARK", "SKIING PLACE", etc. keys. As a result, a prefectural district list display as shown in Fig. 18 is provided. At this time, a navigation message saying "Please choose prefecture name corresponding to destination." is produced. In this example, the "AMUSEMENT PARK" key is touched as facility name.

In this display, the prefectural district containing the pertinent amusement park is determined by touching a corresponding prefectural district key. (In the United States of America, the prefectural districts would be comparatively broad areas corresponding to the states.) The first prefectural district display part in the display has a "COUNTRY" key.

By touching this key, a display is provided in which the facilities all over the country are listed, while producing a navigation message saying "Please chose destination name, and you can call a neighborhood map." On this list display, a desired one of the facilities all over the country can be chosen. When a prefectural district is chosen, a facility choise display as shown in Fig. 19 is provided, which shows a list of amusement parks in the chosen prefectural district. On this list display, a desired facility is chosen. As a result, a map of the neighborhood of the chosen facility as shown in Fig. 20 is displayed, while a navigation message is produced which says "Please touch "SET" key, and you can set destination." By touching the "SET" key, the destination is set. In this example, the best map scale for display is stored as shown in Fig. 15 in correspondence to the area and shape of the specified facility (i.e., amusement park in this case). Thus, the called map is in the best scale, and the whole amusement park and the neighborhood thereof are displayed on the screen. By touching the "SET" key on the display shown in Fig. 20, the destination is set as the amusement park. The actual destination that is set is a parking area which is closest to the front gate of the amuse ment park which is usually set as a target.

Meanwhile, by touching the "POSITION CHANGE" key, eight arrow keys radially spaced-apart are displayed. At this time, a navigation message saying "Map is moved by touching an arrow, and destination can be set by touching "SET" key." is produced. When the operator touches, for instance, the upwardly directed arrow key, the destination can be moved to the north from the parking area at the front gate. Then, by touching the "SET" key at a desired point, the destination setting can be obtained. There may be cases when setting the destination from a telephone No that there is no pertinent facility but there is only a pertinent urban telephone exchange. In such a case, the pertinent map can be displayed, and a "SEARCH NEIGHBORHOOD" key can also be displayed. By touching the "SEARCH NEIGHBORHOOD" key, such item as the name of a town, intersection, etc. near the destination can be displayed. From

this display, a pertinent neighborhood map can be searched for destination setting.

When the map is displayed, the destination setting is completed by touching the "SET" key. When the destination setting is completed, data of roads near the destination or the like are confirmed. If there is no problem, a search condition confirmation display is provided for search up to the destination. Meanwhile, if there is no nearby road or the like suited for navigation after the destination setting, such a display message as "No road suited for navigation is found, so please operate again after moving the destination point to the vicinity of a trunk road" is provided. Then, an arrow mark display like that shown in Fig. 21 is provided for re-setting of the destination.

(Setting of Search Conditions)

When the destination setting is completed in the above way, a search condition confirmation display as shown in Fig. 22 is provided. At this time, a navigation message saying "Touch "SEARCH START" key, and search of route up to destination will be started on condition that preference is given to toll road." is produced. On this display, whether or not there is a designated passing point is set. Also, setting as to whether or not preference is given to a toll road is made.

If preference is to be given to a toll road in the choice of road up to the destination, a "GIVE PREFERENCE" key is touched. Otherwise, a "GIVE NO PREFERENCE" key is touched. In this way, a choice is made as to whether or not preference is to be given to a toll road.

In addition, whether or not a passing point is to be designated on the route up to the destination is chosen by key touch. When a passing point is designated, a best route passing through that point before reaching the destination is chosen in the route search.

Specifically, by touching a "DESIGNATE" key, a passing point setting choice display as shown in Fig. 23 is provided. This display resembles that for the destination setting.

Thus, the passing point can be set in a manner similar to the destination setting as described above. When the passing point setting operation is ended, the "SET" key on the display is touched. Thus, the setting of the passing point is completed, and data of the vicinity of the passing point can be confirmed. Then, a search condition choice confirmation display as shown in Fig. 24 is provided. Here, route search is started by touching a "START SEARCH" key.

(Route Search)

When the "START SEARCH" key as shown in Fig. 24 is touched, a display as shown in Fig. 25 is provided for route search. When the route search is ended, the whole route from the present point to the destination is displayed on map. At the same time, the entire distance (in km) to be covered is displayed as shown in Fig. 26. At this time, it is informed by navigation message that navigation along a route passing through the designated passing point will be made. When it is found as a result of the search that the destination is near the present point, this is displayed, and it is instructed to drive the vehicle with reference to a map. When a point at which a route search can be made is reached, a "SEARCH" key is displayed. When this "SEARCH" key is touched, a navigation route search is made. Further, during the navigation route search a present position display can be provided by depressing a present position switch. It is thus possible to confirm the present position during the navigation. When the search is ended, the whole route and the entire distance to be covered are displayed by touching "DISPLAY ROUTE" key.

If the navigation route search could not be made, this is displayed, and also a "CON FIRM" key is displayed. Then, by touching the "CONFIRM" key, a present position display is provided. By touching the "SEARCH" key after departure and after running past the displayed present position, the navigation route search is started again. In other words, if there was no road suitable for navigation near the present position, this fact is displayed, and it is instructed to carry out a search again in the neighborhood of a trunk road. If the route search could not be made any reason other than a problem with a road in the vicinity of the present position, merely the fact that the route search could not be made is displayed, and it is instructed to undertake the operation afresh.

(Route Guidance)

After the whole route and the entire distance (in km) to be covered have been displayed after the end of the route search, route navigation up to the destination is started by touching a "START NAVIGATION" key on the display or after 15 seconds of running. That is, a route navigation display as shown in Fig. 27 is provided at this time.

As shown, the display includes a present position mark shown at the center of the display. Also, a "DURING NAVIGATION" display is provided in an upper portion of the display.

Further, the vicinity of the passing point (only when the passing point has been set) and the distance to be covered up to the destination neighborhood are displayed in a right lower portion of the display.

If it is judged during running that the vehicle position is deviated from the navigation route, the "DURING NAVIGATION" display is removed, and a "RE-SEARCH" key is displayed in a lower portion of the display as shown in Fig. 28. By touching this "RE-SEARCH" key, the route search can be made afresh.

Further, by touching a "WHOLE ROUTE" key on the route navigation display, the whole navigation route from the present position to the destination is displayed. The display of the whole navigation route is similar to the display shown in Fig. 26. In this case, however, a "RESUME NAVIGATION" key is displayed in lieu of the "START

NAVIGATION" key. By touching this "RESUME NAVIGATION" key, the usual navigation display is restored.

(Intersection Guidance)

When an intersection is approached during route navigation, it is detected, and an enlarged-scale display of the vicinity of the intersection is provided for navigation. More specifically, when an intersection is approached by the vehicle, this approach is detected, and an enlarged-scale intersection vicinity display as shown in Fig. 29 is provided. Also, the direction of proceeding along the navigation route is informed by a navigation message. That is, a navigation message saying, for instance, "Please turn to the left at so and so intersection about 300 meters ahead." is output. By touching the "DISPLAY ROUTE" key on the enlarged-scale intersection vicinity display, the usual route navigation display is provided. This display includes an "INTERSECTION" key display. By touching this "DISPLAY INTERSECTION" key, the enlarged-scale intersection vicinity display can be restored. When it is detected that the navigated intersection has been passed, the usual route navigation navigation display is restored.

(Route List)

It is possible to display the navigation route from the present position to the destination in the form of a list. Also, it is possible to display a map showing the vicinity of each point on the navigation route.

A display showing the whole navigation route from the present position to the destination has a "NAVIGATION ROAD LIST" key display. By touching this "NAVIGATION ROAD LIST" key, a display showing a navigation route list from the present position to the destination is provided. That is, a display showing the roads extending from the present position to the destination as shown in Fig. 30 is provided. In this display, the navigation route is divided at points of change in road type or at interchanges or junctions where roads are entered or left. Also, the distances between adjacent points noted above are shown as actual distances. If the route from the present position to the destination can not be shown on the same display, the display can be scrolled with "FORWARD" and "BACKWARD" keys (only the "FORWARD" key being shown in the Figure). In this way, a display of the whole route up to the destination can be obtained.

Further, by touching a "SURROUNDING AREA" key which is provided outside the navigation route list display and on one side of each of the points noted above, a map centered on that point is displayed. This display has eight arrow keys corresponding to respective directions, and map movement can be made by using these keys.

(Route Re-search)

When the navigation route is deviated from the present position on the route navigation display, it is possible to carry out navigation route re-search and display a new navigation route.

More specifically, if it is judged that the position of the running vehicle has been deviated from the navigation route while the route navigation display is provided, as described before, the "DURING NAVIGATION" display is removed, and a "RE-SEARCH" key is displayed on a lower portion of the display. By touching this "RE-SEARCH" key, a new route in the vicinity of the present position is searched. When the re-search is ended, the new navigation route from the vicinity of the present position is displayed. If the re-search could not be made, the previous navigation route is displayed again. At this time, a navigation message saying "New route could not be found, so the previous route will be displayed." is output. Also, this content is displayed.

The re-search which is instigated by touching the "RE-SEARCH" key, is a search of a route from the present position to a navigation route which has already been searched.

During the route search up to this navigation route, a "SEARCH WHOLE ROUTE" key is displayed. By touching this "SEARCH WHOLE ROUTE" key, an entire new route from the present position to the destination is searched. When the search is ended, the whole new navigation route is displayed. The display of this whole new navigation route is like the case when a route search is carried out by setting the destination. Further, when a passing point has been set at the time of the re-search, an "ERASE PASSING POINT" key is displayed simultaneously with the "SEARCH WHOLE ROUTE" key. By touching this "ERASE PASSING POINT" key, a search of a whole new route without any designated passing point is made. When the search of the whole new route after erasing of the passing point is ended, the whole new route without any designated passing point is displayed.

(Route Change)

After the end of the navigation route search, the navigation route or search condition may be changed. The whole route display (see Fig. 26) after the end of the navigation route search has a "CHANGE ROUTE" key display. By touching this "CHANGE ROUTE" key, a mute change choice display as shown in Fig. 31 is provided.

This display has a "RE-SEARCH TO SET DIFFERENT ROUTE" key. By touching this key, a whole new navigation route is searched. When the search is ended, the whole new navigation route is displayed. When the result of the search is the same as before the navigation route change, the navigation route before the navigation route change is restored.

The route change choice display also has a "CHANGE SEARCH CONDITION" key. By touching this key, a search condition confirmation display is provided.

In this case, it is possible to change the setting of any designated passing point and also to change the setting as to whether or not preference is to be given to toll roads. Further, it is possible to change the setting so as to make a further change of the navigation route.

In the presence of the route navigation display, it is possible to correct the navigation route with a change in the present position and also to correct the navigation route from toll road to general road or from general road to toll road. More specifically, by touching a "CORRECT" key on the route navigation display, a route correction display is provided.

This display, as shown in Fig. 32, has eight direction arrow keys for correcting the present position. By touching these keys the present position is changed to a new position desired on a separate route. Then a"SET" key is touched. As a result, the present position is changed, and a new navigation route from the changed position is displayed.

When a toll road is set as part of the navigation route along which the vehicle is to run, a "CORRECT ROUTE TO GENERAL ROAD" key is displayed on the route correction display. This key is touched if it is desired to use an ordinary road instead of the toll road. As a result, the route is corrected to a new one using ordinary roads only. If ordinary roads only is set as the navigation road along which the vehicle is to run, a "CORRECT ROUTE TO TOLL ROAD" key is displayed on the route correction display. This key is touched if it is desired to use toll roads. As a result, the route is corrected to a new one using toll roads.

(Navigation concerning Arrival at Designated Passing Point)

When the vicinity of a designated passing point is approached in the presence of a route navigation display with the designated passing point, it is informed by a navigation message that the present position is near the designated passing point. That is, a navigation message saying "Now, you are near the designated passing point." is output. When the passing point has been passed, a message saying "Navigation is switched to one up to destination neighborhood." is output. Also, a display of this navigation content is provided. The navigation is then switched to the one up to destination neighborhood.

(Navigation concerning Arrival at Destination)

When destination neighborhood is approached, ending navigation is provided by a navigation message. More specifically, when the destination that has been set is approached by the vehicle, a message saying "You are in the destination neighborhood, and this is an ending navigation message." is output, thus bringing an end to the navigation.

At this time, if the destination can not be displayed on the displayed map, a message that "You can confirm destination on a wide area map." is displayed on the display. When this message is displayed, the destination can be confirmed with a wide area map displayed by a map area expanding operation. A display on which arrival at the destination is determined is shown in Fig. 33. When the destination is not shown in the display, a message that it is desired to confirm the destination on an expanded area map is displayed.

When a ferry stop is detected, arrival at the ferry stop is informed by a navigation message, and then the navigation message is interrupted.

(Other Functions)

(Map Movement)

By touching a position of a displayed map, the vicinity of that position is moved to the center of the display. Thus, a desired portion of display can be brought to the center thereof. When it is desired to obtain display of a map located adjacent to a prevailing display, the edge of the display is touched on the desired side. By so doing, the map display can be realized.

(Map inversion)

A displayed map can be inverted by touching a bearing display on it. That is, a map displayed with the north shown upward is inverted to one with the north shown downward.

(Display Switching during Running)

A map display which is too detailed can not be seen during running. Accordingly, during display a substitute display showing main roads only is provided by automatic switching. When the vehicle is parked, the detailed map display is restored.

(Features of this Structural Example)

This example is a map call-out system for a navigation system for calling out and displaying maps concerning call subjects specified according to input information, and it features that it comprises memory means for storing map data, map call-out means for calling out map data about a call subject from the memory means, and map display means for displaying the called map, the map call-out means calling out map data of a scale suited to the display according to kind of map call-out subject, the display means displaying the call-out subject map in a scale corresponding to the subject.

Thus, in this example of a map call-out system, suited map scales are stored in the memory means in correspondence to the kinds of call-out subjects. Thus, when displaying a map corresponding to a destination in destination setting or the like, the map can be displayed in a scale suited to the subject. For example, in the case of a golfing place, a scale which permits display of the

whole golfing place is set. In the case of a private house, a scale which permits sufficient specification of the private house is set. It is thus possible to avoid such a situation that it becomes impossible to obtain correct destination setting due to unnecessary operation made in map display for destination setting or similar purposes.

Alternatively, it is preferable to carry out the foregoing embodiment as described below.

(1) A relationship between items to be retrieved and map scales is stored in the form of a table. A desired map scale will be determined with reference to this table.

The table shown in Fig. 15 facilitates prompt determination of a map scale in accordance with an input item such as a name or a category of an item to be retrieved.

(2) The table covers names of destinations and a relationship between these names and map scales.

Once a destination is designated, a map thereof can be displayed on the basis of the foregoing relationship.

(3) The table also contains information on longitudes and latitudes of destinations. This information facilitates selection of a map to be displayed. For instance, if the destination is a golf course, an appropriate map scale will be selected such that the golf course
is entirely displayed with its center present at the center of the screen.

The map data cover a plurality of map scales. Map data will be retrieved in accordance with a map scale read from the table.

(4) The table is stored in the memory for the map data. Thus, the map scales can be read similarly to the map data.

(5) Alternatively, the table may be stored in a memory separate from that for the map data. For instance, the table may be stored in a ROM of the ECU. This enables quick retrieval of the map scale.

A reaction area in a display can be enlarged from one directly above a switch display in the operator's eyesight direction. Specifically, the operator's position is determined from the driver's position or the like, and when the display is looked at to the right and upward, for instance, the reaction area is enlarged to the right and downward of a switch on the front side in the eyesight direction. Thus, operability can be improved in both cases when the display is looked at obliquely and diretly from the front.

Claims

1. A display touch type input system for inputting information by detecting touching of a switch part of a display, comprising:

a display means for displaying a switch image in a switch display area;

a touch panel provided above the display means and having a number of reaction points, the touching of the reaction points by the operator being detected;

and switch operation detecting means for setting an area covering certain ones of the reaction switches, the touching of the area being judged to be the touching of a corresponding switch displayed on the display means;

the switch operation detecting means being capable of setting a reaction area by enlarging a switch display area, in which a switch image is displayed, in the direction of the eyesight of the operator.

2. The system according to claim 1, wherein:

the switch operation detecting means includes a computer unit for performing arithmetic operations and detecting the touching of a switch from an instruction of the display of the switch on the display means and the result of detection of touchinf of to the touch panel.

3. The system according to claim 2, wherein:

the computer unit compares a reaction area corresponding to a switch display area and a touched reaction point and judges the switch that has been touched by enlarging the reaction
area when it is found as the result of comparison that a meaningless reaction point outside the reaction area has been touched.

4. The system according to claim 1, wherein:

the switch operation detecting means changes the size of a reaction area to be enlarged in the operator's eyesight direction on the side of an adjacent switch in the eyesight direction according to the distance between the reaction area and the adjacent switch.

5. A display touch type input system for a vehicle, said system being mounted in the vehicle and detecting information by detecting the touching of a switch part of a display, comprising:

a display means for displaying images of a normal switch operable at all times and a parking time operable switch, the operation of which is prohibited during running of the vehicle, in respective switch display areas;

a touch panel provided above the display means and having a number of reaction points, the touching of the reaction points by the operator being detected;

switch operation detecting means for setting an area covering certain ones of the reaction switches, the touching of the area being judged to be the touching of a corresponding switch displayed on the display means, the touching of the switch being detected from the result of detection of the

touching of the touch panel; and

running condition detecting means for detecting vehicle running conditions;

the switch operation detecting means enlarging the reaction area corresponding to the normally operable switch toward the parking time operable switch in the running state of the vehicle when the parking time operable switch is displayed adjacent to the normally operable switch.

6. A display touch type input system for a vehicle, said system being mounted in the vehicle and inputting information by detecting the touching of a switch part of a display, comprising:

a display means for displaying images of a normally operable switch and a parking time operable switch, the operation of which is prohibited during running of the vehicle, in respective switch display areas;

a touch panel provided above the display means and having a number of reaction points, the touching of the reaction points by the operator being detected;

switch operation detecting means for setting an area covering certain ones of the reaction points, the touching of said area being judged to be the touching of a corresponding switch displayed on the display means, the touching of the switch being detected from the result of detection of the touching of the touch panel; and

running condition detecting means for detecting vehicle running conditions;

the switch operation detecting means setting reaction points in an area including a switch display area and enlarged in the operator's eyesight direction to be a reaction area of reaction points, the touching of which is judged to be the touching of the displayed switch, and enlarges a reaction area corresponding to a normally operable switch normally operable during running of the vehicle toward a parking time operable switch when the parking time operable switch is displayed adjacent to the normally operable switch.

7. The system according to claim 6, wherein:

the switch operation detecting means includes a computer for performing arithmetic operations and detects the touching of a switch from an instruction of display of a switch on the display means and the result of detection of the touching of the touch panel.

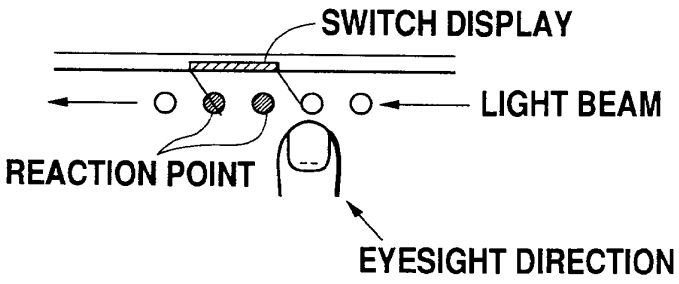
SWITCH DISPLAY
LIGHT BEAM
REACTION POINT
EYESIGHT DIRECTION

Fig. 1

Fig. 2

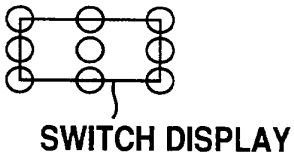

Fig. 3

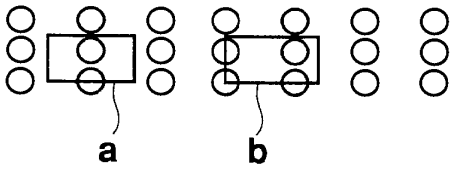

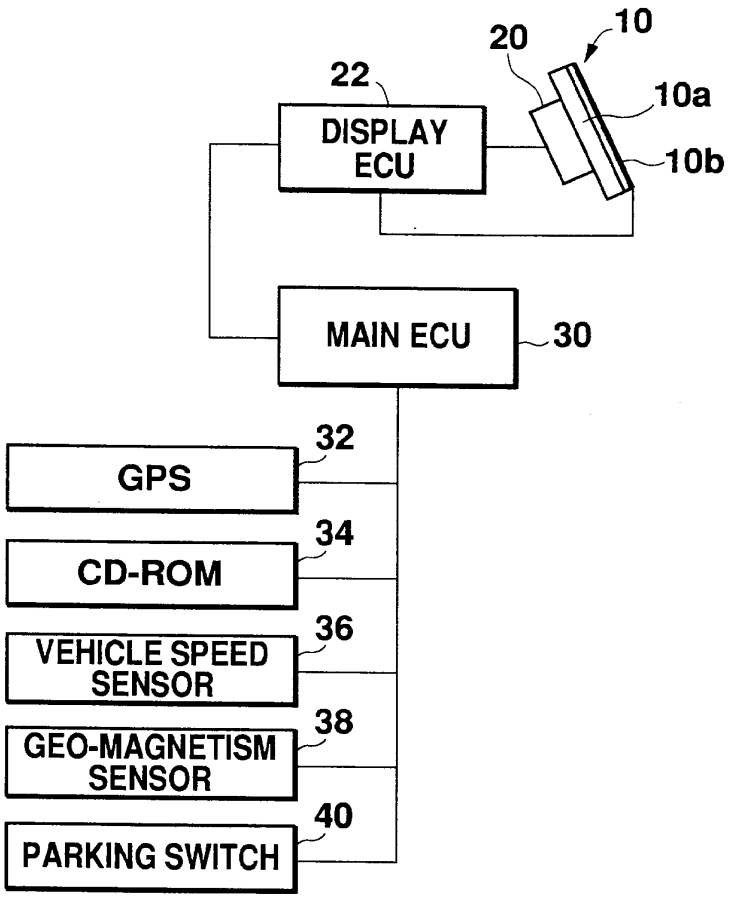

OVERALL STRUCTURE OF EMBODIMENT

Fig. 4

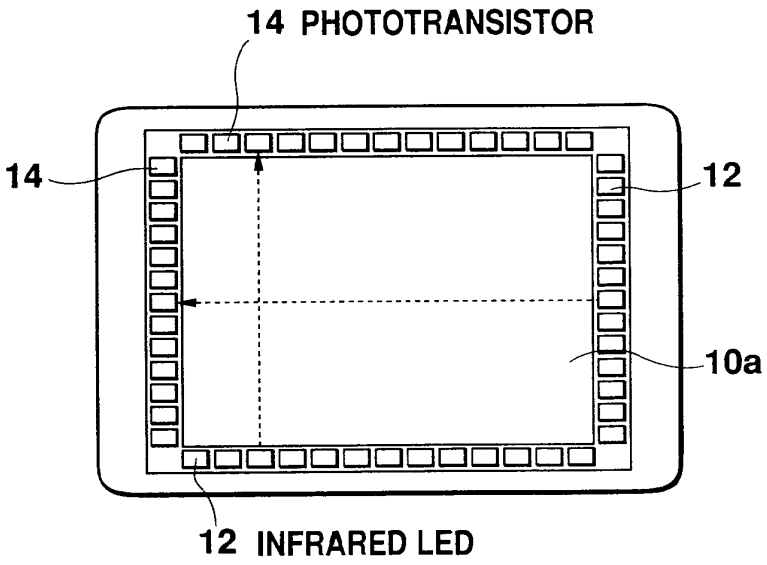

STRUCTURE OF TOUCH PANEL

Fig. 5

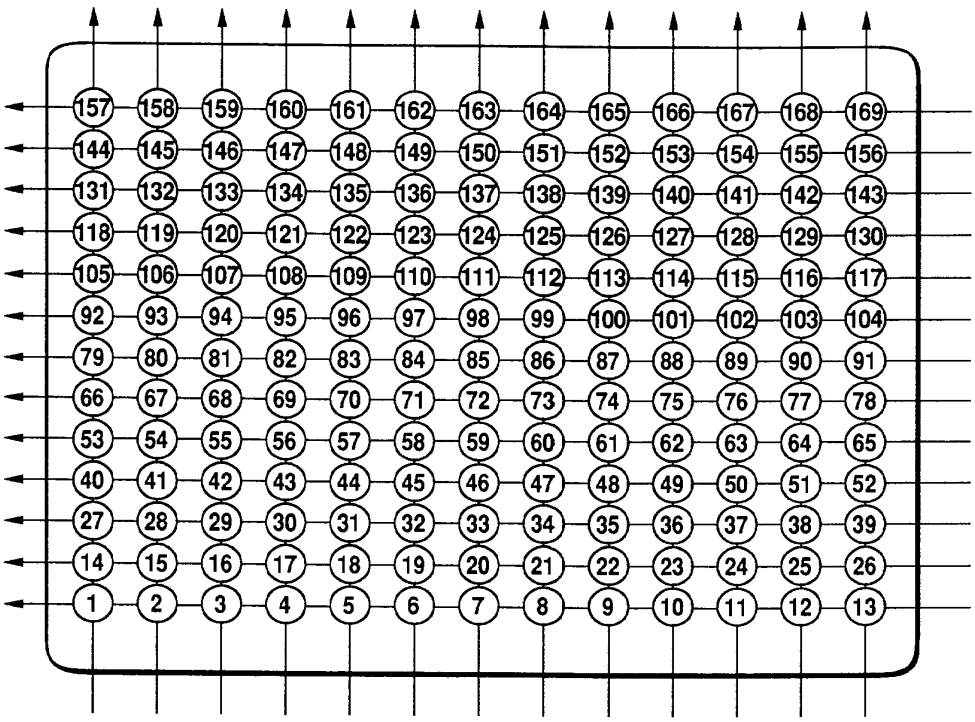
157 158 159 160 161 162 163 164 165 166 167 168 169
144 145 146 147 148 149 150 151 152 153 154 155 156
131 132 133 134 135 136 137 138 139 140 141 142 143
118 119 120 121 122 123 124 125 126 127 128 129 130
105 106 107 108 109 110 111 112 113 114 115 116 117
92 93 94 95 96 97 98 99 100 101 102 103 104
79 80 81 82 83 84 85 86 87 88 89 90 91
66 67 68 69 70 71 72 73 74 75 76 77 78
53 54 55 56 57 58 59 60 61 62 63 64 65
40 41 42 43 44 45 46 47 48 49 50 51 52
27 28 29 30 31 32 33 34 35 36 37 38 39
14 15 16 17 18 19 20 21 22 23 24 25 26
1 2 3 4 5 6 7 8 9 10 11 12 13

Fig. 6

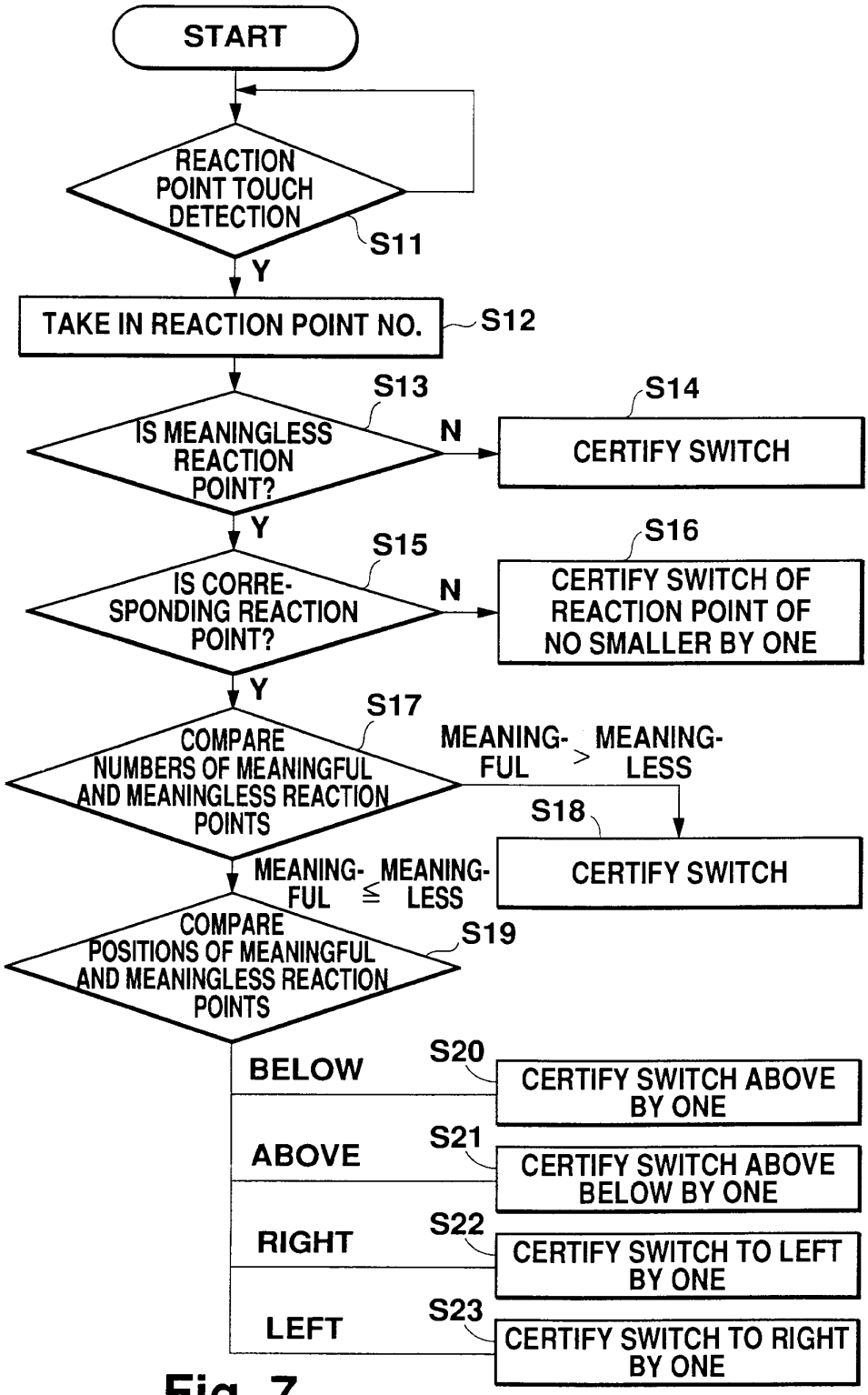
START
REACTION POINT TOUCH DETECTION
S11
Y
TAKE IN REACTION POINT NO.
S12
S13
IS MEANINGLESS REACTION POINT?
N
S14
CERTIFY SWITCH
Y
S15
IS CORRE-SPONDING REACTION POINT?
N
S16
CERTIFY SWITCH OF REACTION POINT OF NO SMALLER BY ONE
Y
S17
COMPARE NUMBERS OF MEANINGFUL AND MEANINGLESS REACTION POINTS
MEANING-FUL > MEANING-LESS
S18
CERTIFY SWITCH
MEANING-FUL ≦ MEANING-LESS
COMPARE POSITIONS OF MEANINGFUL AND MEANINGLESS REACTION POINTS
S19
BELOW
S20
CERTIFY SWITCH ABOVE BY ONE
ABOVE
S21
CERTIFY SWITCH ABOVE BELOW BY ONE
RIGHT
S22
CERTIFY SWITCH TO LEFT BY ONE
LEFT
S23
CERTIFY SWITCH TO RIGHT BY ONE

Fig. 7

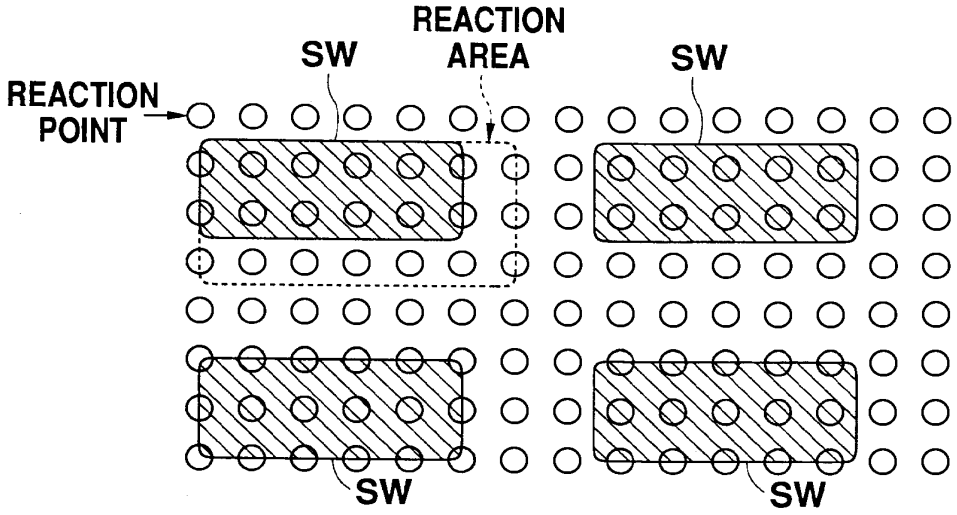
REACTION
AREA
SW
SW
REACTION
POINT
SW
SW

Fig. 8

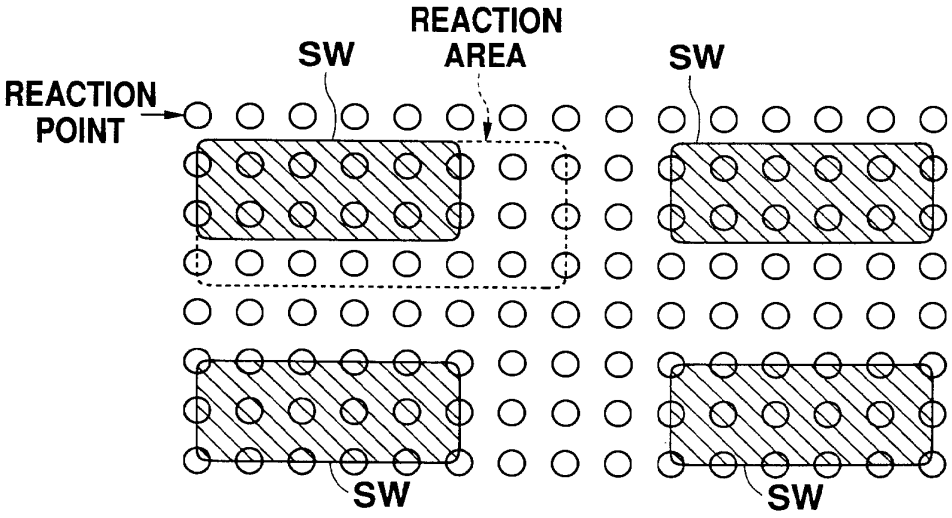
REACTION
AREA
SW
SW
REACTION
POINT
SW
SW

Fig. 9

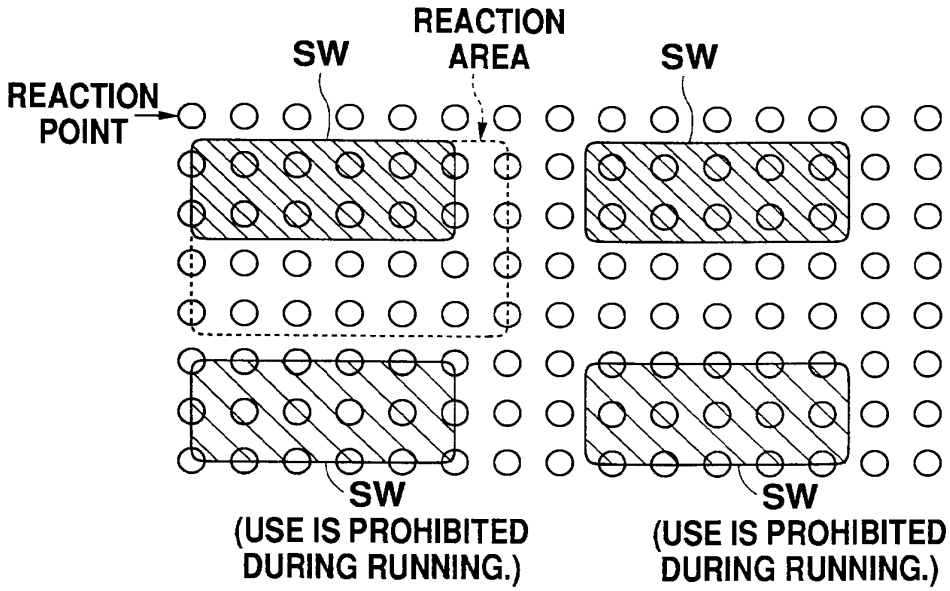
REACTION
AREA
SW
SW
REACTION
POINT
SW
(USE IS PROHIBITED
DURING RUNNING.)
SW
(USE IS PROHIBITED
DURING RUNNING.)

Fig. 10

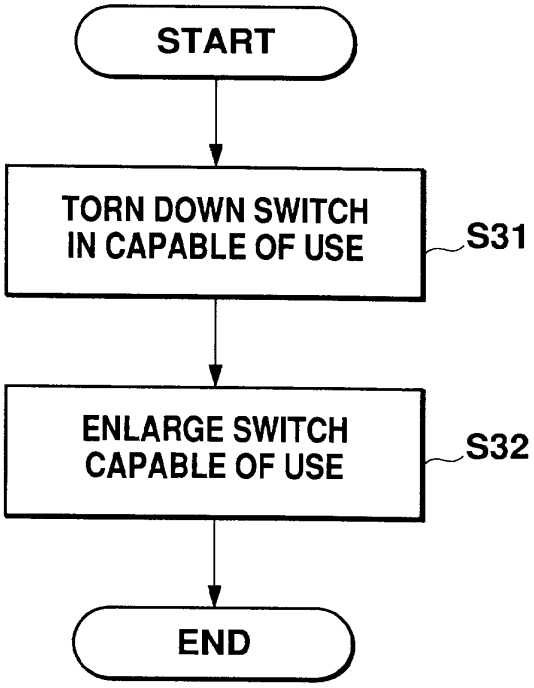

PROCESS IN CASE WHEN THERE IS SWITCH INCAPABLE OF USE

Fig. 11

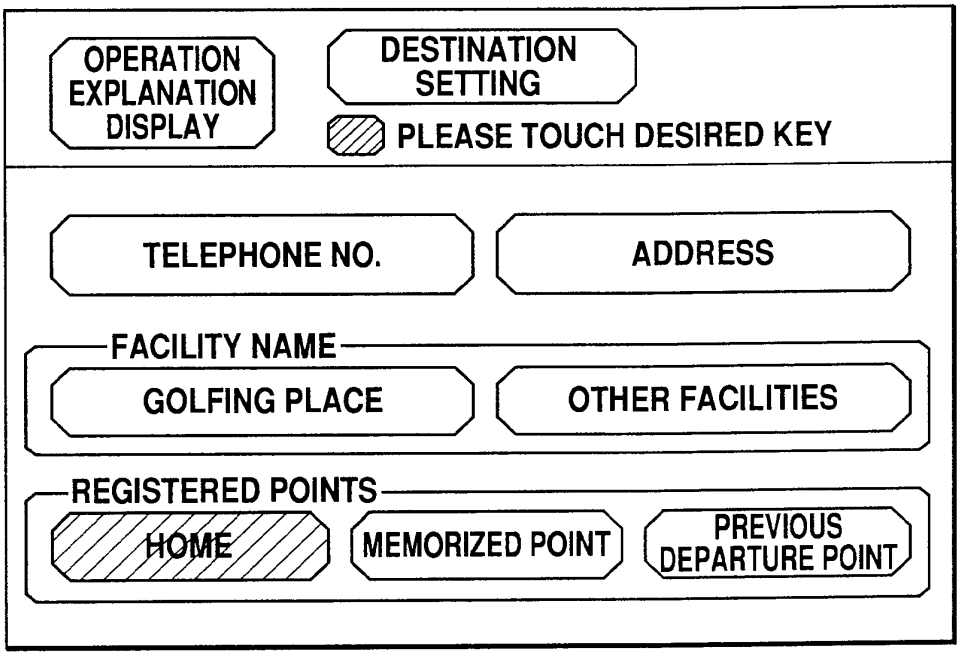
OPERATION EXPLANATION DISPLAY
DESTINATION SETTING
PLEASE TOUCH DESIRED KEY
TELEPHONE NO.
ADDRESS
FACILITY NAME
GOLFING PLACE
OTHER FACILITIES
REGISTERED POINTS
HOME
MEMORIZED POINT
PREVIOUS DEPARTURE POINT

Fig. 12

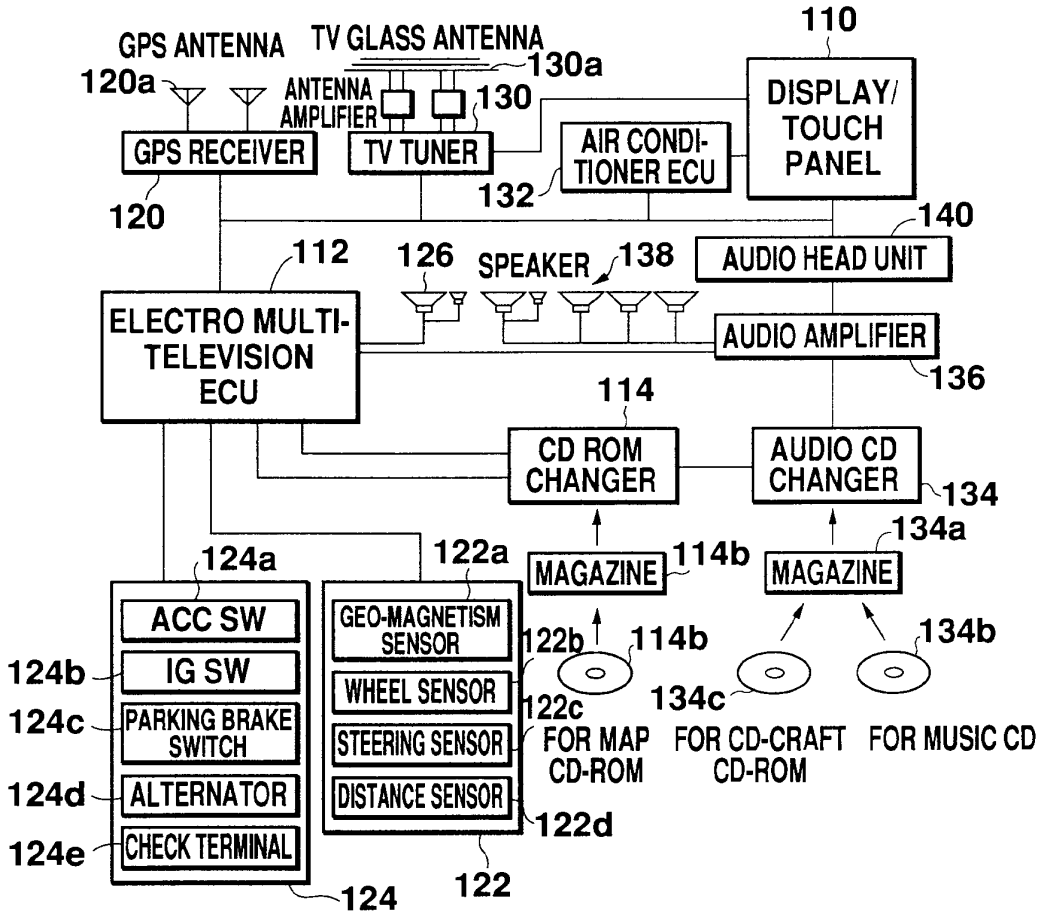
GPS ANTENNA
TV GLASS ANTENNA
120a
130a
ANTENNA AMPLIFIER
130
110
DISPLAY/ TOUCH PANEL
GPS RECEIVER
TV TUNER
AIR CONDI-TIONER ECU
132
120
140
AUDIO HEAD UNIT
112
126
SPEAKER
138
ELECTRO MULTI-TELEVISION ECU
AUDIO AMPLIFIER
136
114
CD ROM CHANGER
AUDIO CD CHANGER
134
134a
124a
122a
MAGAZINE
114b
MAGAZINE
ACC SW
GEO-MAGNETISM SENSOR
122b
114b
134b
124b
IG SW
WHEEL SENSOR
134c
124c
PARKING BRAKE SWITCH
122c
STEERING SENSOR
FOR MAP CD-ROM
FOR CD-CRAFT CD-ROM
FOR MUSIC CD
124d
ALTERNATOR
DISTANCE SENSOR
122d
124e
CHECK TERMINAL
124
122

Fig. 13

OPERATION FLOW

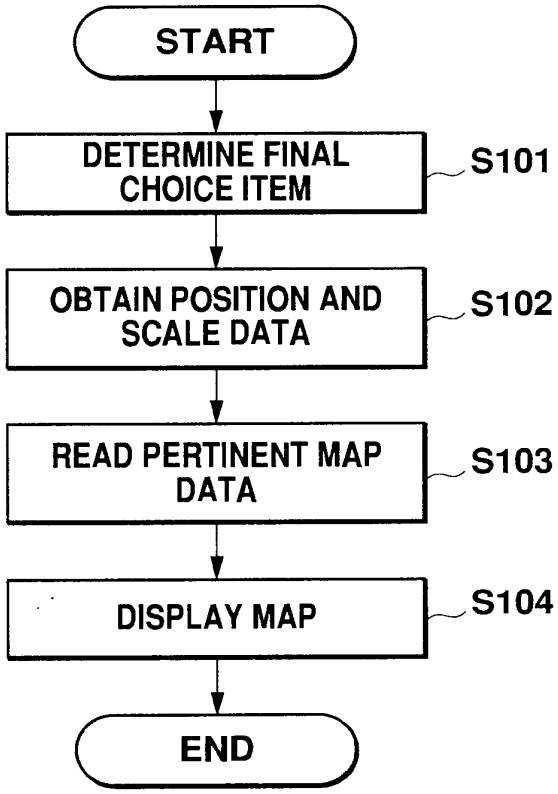

Fig. 14

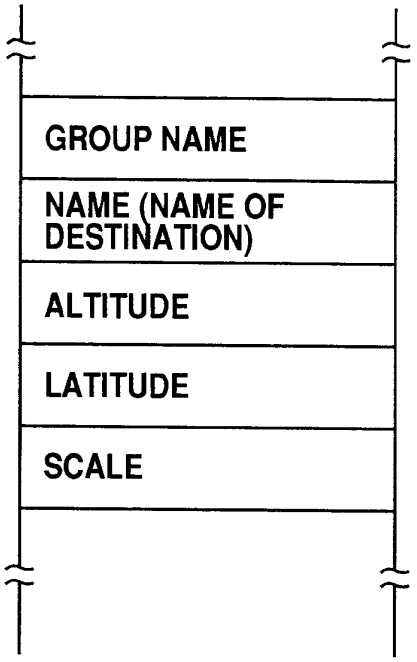
GROUP NAME
NAME (NAME OF DESTINATION)
ALTITUDE
LATITUDE
SCALE

Fig. 15

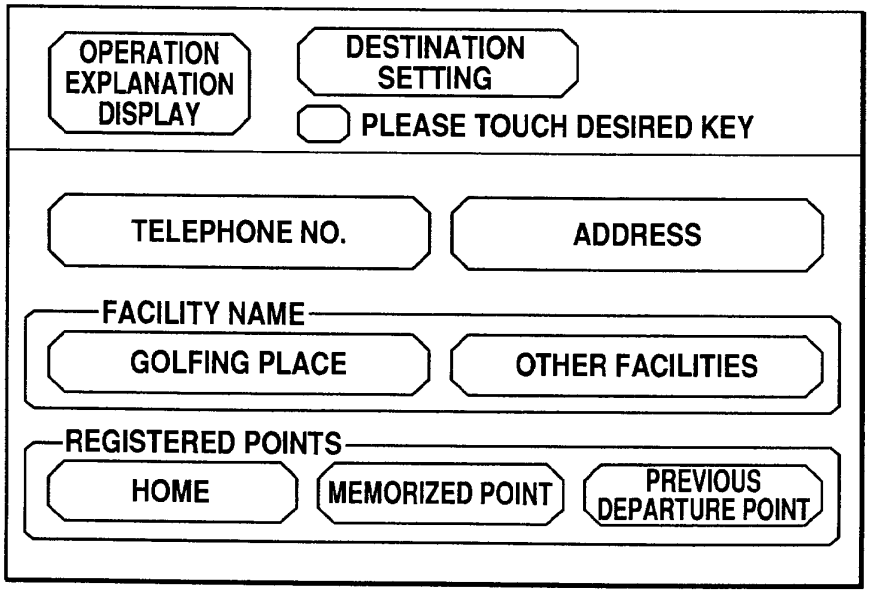
OPERATION EXPLANATION DISPLAY
DESTINATION SETTING
PLEASE TOUCH DESIRED KEY
TELEPHONE NO.
ADDRESS
FACILITY NAME
GOLFING PLACE
OTHER FACILITIES
REGISTERED POINTS
HOME
MEMORIZED POINT
PREVIOUS DEPARTURE POINT

Fig. 16

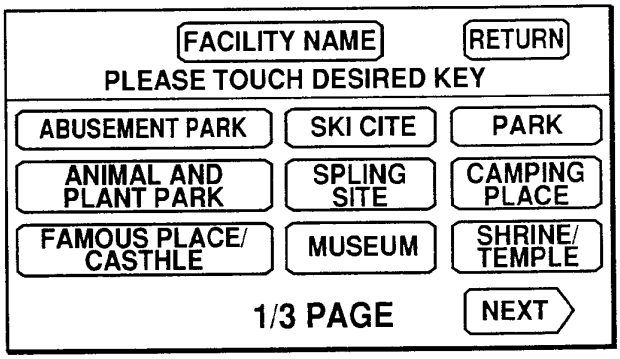

Fig. 17

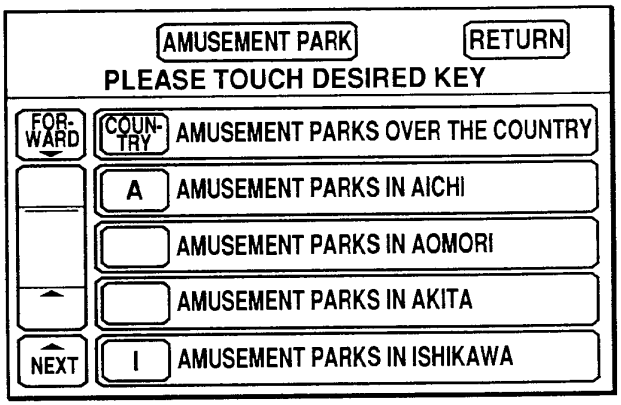

Fig. 18

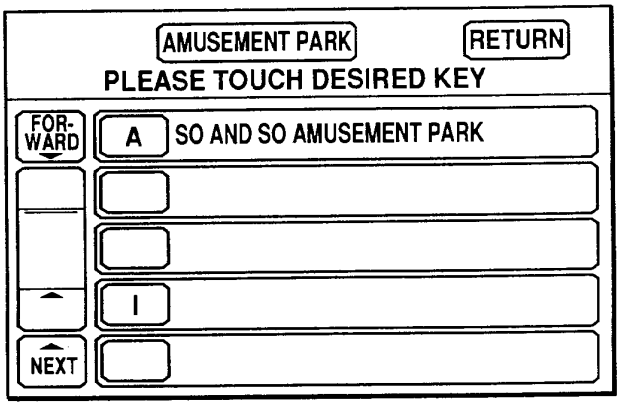

Fig. 19

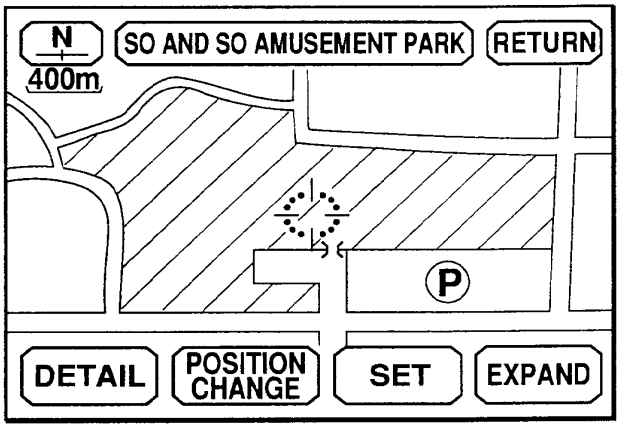
N
400m
SO AND SO AMUSEMENT PARK
RETURN
P
DETAIL
POSITION CHANGE
SET
EXPAND

Fig. 20

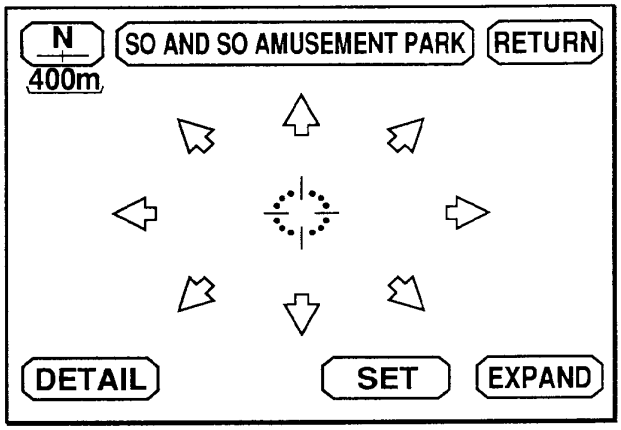
N
400m
SO AND SO AMUSEMENT PARK
RETURN
DETAIL
SET
EXPAND

Fig. 21

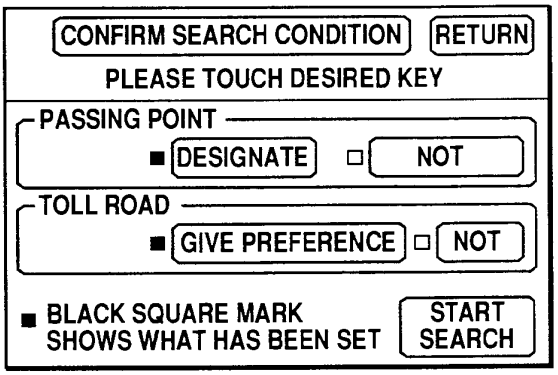

Fig. 22

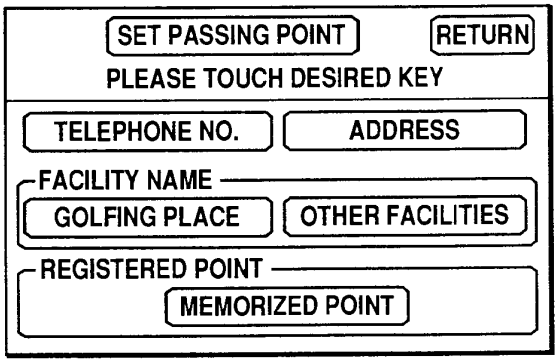

Fig. 23

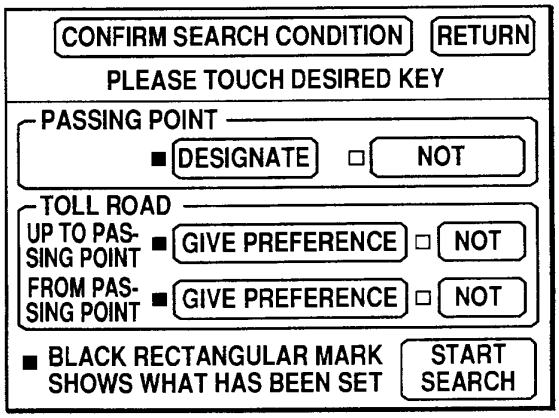

Fig. 24

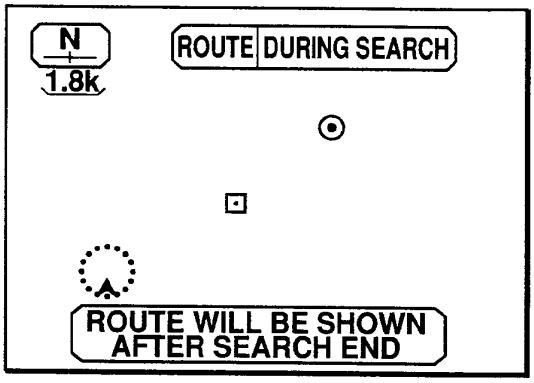

Fig. 25

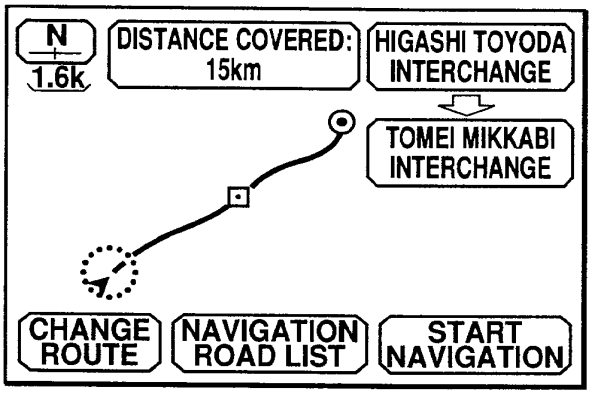

Fig. 26

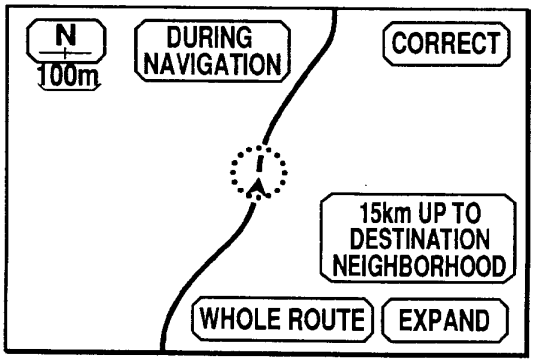

Fig. 27

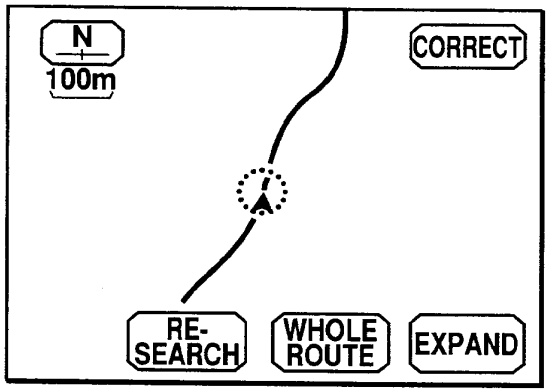
N
100m
CORRECT
RE-
SEARCH
WHOLE
ROUTE
EXPAND

Fig. 28

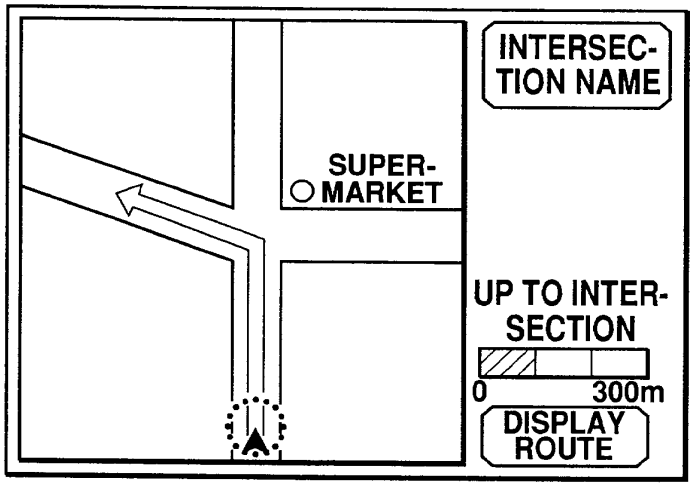
INTERSEC-
TION NAME
SUPER-
MARKET
UP TO INTER-
SECTION
0
300m
DISPLAY
ROUTE

Fig. 29

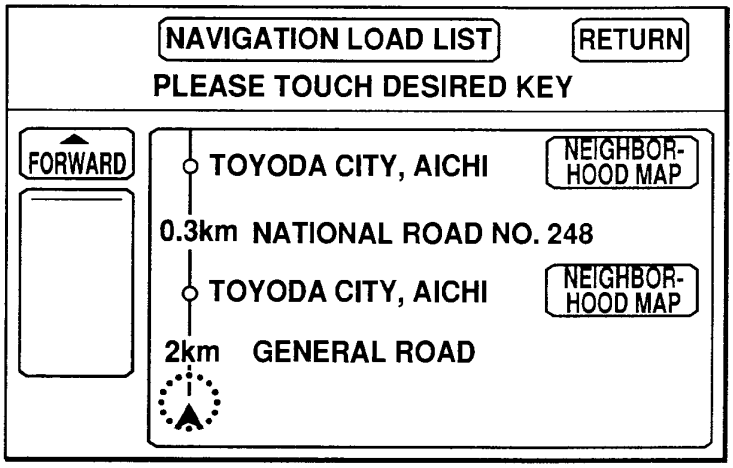
NAVIGATION LOAD LIST
RETURN
PLEASE TOUCH DESIRED KEY
FORWARD
TOYODA CITY, AICHI
NEIGHBOR-HOOD MAP
0.3km NATIONAL ROAD NO. 248
TOYODA CITY, AICHI
NEIGHBOR-HOOD MAP
2km GENERAL ROAD

Fig. 30

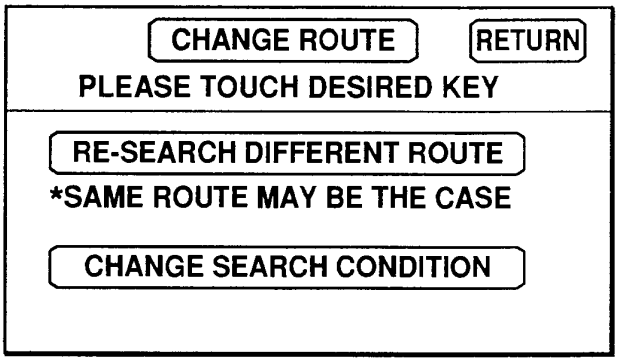
CHANGE ROUTE
RETURN
PLEASE TOUCH DESIRED KEY
RE-SEARCH DIFFERENT ROUTE
*SAME ROUTE MAY BE THE CASE
CHANGE SEARCH CONDITION

Fig. 31

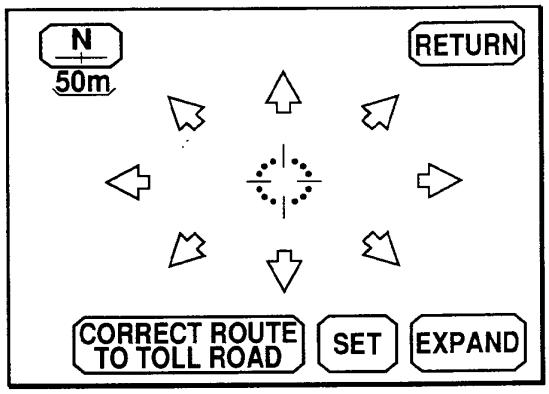
N
50m
RETURN
CORRECT ROUTE TO TOLL ROAD
SET
EXPAND

Fig. 32

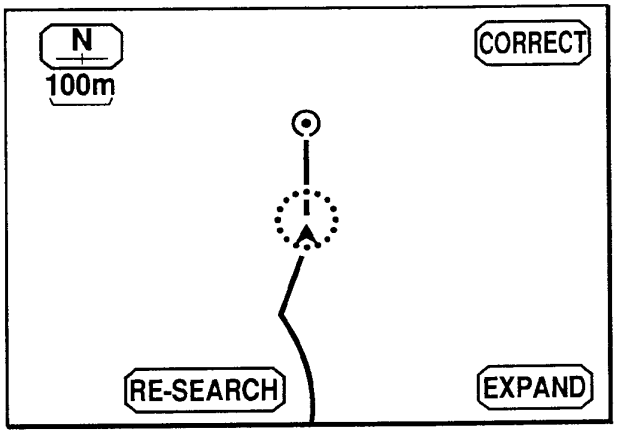
N
100m
CORRECT
RE-SEARCH
EXPAND

Fig. 33

European Patent Office

EUROPEAN SEARCH REPORT

Application Number
EP 95 11 4749

DOCUMENTS CONSIDERED TO BE RELEVANT

Category	Citation of document with indication, where appropriate, of relevant passages	Relevant to claim	CLASSIFICATION OF THE APPLICATION (Int.Cl.6)
A	IBM TECHNICAL DISCLOSURE BULLETIN, vol. 33, no. 10a, March 1991 NEW YORK US, pages 223-227, XP 000110024 'ALGORITHM FOR DECREASING THE ERROR RATE OF DATA ENTERED ON A TOUCH-SENSITIVE TERMINAL' * the whole document *	1,2,5-7	G06F3/033 G07C1/30
A	EP-A-0 476 972 (XEROX CORP) 25 March 1992 * column 8, line 48 - column 9, line 15; figure 10 *	1,2,5-7	
A	EP-A-0 171 365 (BE BO CAR TRONIC SRL) 12 February 1986 * page 4, line 18 - page 5, line 31 *	5-7	
A	DE-A-40 33 832 (MITSUBISHI ELECTRIC CORP) 27 June 1991 * column 6, line 44 - column 7, line 10 *	5,6	

TECHNICAL FIELDS SEARCHED (Int.Cl.6)

G06F
G07C

The present search report has been drawn up for all claims

Place of search	Date of completion of the search	Examiner
THE HAGUE	8 January 1996	Bailas, A

CATEGORY OF CITED DOCUMENTS

X : particularly relevant if taken alone
Y : particularly relevant if combined with another document of the same category
A : technological background
O : non-written disclosure
P : intermediate document

T : theory or principle underlying the invention
E : earlier patent document, but published on, or after the filing date
D : document cited in the application
L : document cited for other reasons

& : member of the same patent family, corresponding document

EPO FORM 1503 03.82 (P04C01)

Electronic Acknowledgement Receipt

EFS ID:	12026580
Application Number:	13310755
International Application Number:	
Confirmation Number:	1066
Title of Invention:	USER INTERFACE
First Named Inventor/Applicant Name:	Magnus Goertz
Customer Number:	75660
Filer:	Marc Aron Berger
Filer Authorized By:	
Attorney Docket Number:	NEONODE.P039
Receipt Date:	08-FEB-2012
Filing Date:	04-DEC-2011
Time Stamp:	12:36:45
Application Type:	Utility under 35 USC 111(a)

Payment information:

Submitted with Payment	no

File Listing:

Document Number	Document Description	File Name	File Size(Bytes)/ Message Digest	Multi Part /.zip	Pages (if appl.)
1	Information Disclosure Statement (IDS) Form (SB08)	NEONODE-P039_InformationDisclosureStatement_02-08-2012.pdf	612602 37f0eaf5073179fa82ed3c93037b4ad43963b357	no	4

Warnings:	
Information:	

2	Foreign Reference	EP0513694A2.pdf	110965 e3ce0a2ce839169a5cd5139089538a6bf4fbac73	no	12
Warnings:					
Information:					
3	Foreign Reference	EP0618528A1.pdf	205301 98ecf622dd6bdcf97be41300a704773cdf94f902	no	18
Warnings:					
Information:					
4	Foreign Reference	EP0703525A1.pdf	398433 aed9bef9d97ba8e1bd196c8009cf50a3dfad450f	no	34
Warnings:					
Information:					
		Total Files Size (in bytes):	1327301		

This Acknowledgement Receipt evidences receipt on the noted date by the USPTO of the indicated documents, characterized by the applicant, and including page counts, where applicable. It serves as evidence of receipt similar to a Post Card, as described in MPEP 503.

<u>New Applications Under 35 U.S.C. 111</u>
If a new application is being filed and the application includes the necessary components for a filing date (see 37 CFR 1.53(b)-(d) and MPEP 506), a Filing Receipt (37 CFR 1.54) will be issued in due course and the date shown on this Acknowledgement Receipt will establish the filing date of the application.

<u>National Stage of an International Application under 35 U.S.C. 371</u>
If a timely submission to enter the national stage of an international application is compliant with the conditions of 35 U.S.C. 371 and other applicable requirements a Form PCT/DO/EO/903 indicating acceptance of the application as a national stage submission under 35 U.S.C. 371 will be issued in addition to the Filing Receipt, in due course.

<u>New International Application Filed with the USPTO as a Receiving Office</u>
If a new international application is being filed and the international application includes the necessary components for an international filing date (see PCT Article 11 and MPEP 1810), a Notification of the International Application Number and of the International Filing Date (Form PCT/RO/105) will be issued in due course, subject to prescriptions concerning national security, and the date shown on this Acknowledgement Receipt will establish the international filing date of the application.

UNITED STATES PATENT AND TRADEMARK OFFICE

UNITED STATES DEPARTMENT OF COMMERCE
United States Patent and Trademark Office
Address: COMMISSIONER FOR PATENTS
P.O. Box 1450
Alexandria, Virginia 22313-1450
www.uspto.gov

APPLICATION NUMBER	FILING or 371(c) DATE	GRP ART UNIT	FIL FEE REC'D	ATTY.DOCKET.NO	TOT CLAIMS	IND CLAIMS
13/310,755	12/04/2011	2172	1800	NEONODE.P039	18	4

CONFIRMATION NO. 1066

75660
Soquel Group, LLC
P.O. Box 691
Soquel, CA 95073

FILING RECEIPT

OC000000051828514

Date Mailed: 01/09/2012

Receipt is acknowledged of this non-provisional patent application. The application will be taken up for examination in due course. Applicant will be notified as to the results of the examination. Any correspondence concerning the application must include the following identification information: the U.S. APPLICATION NUMBER, FILING DATE, NAME OF APPLICANT, and TITLE OF INVENTION. Fees transmitted by check or draft are subject to collection. Please verify the accuracy of the data presented on this receipt. **If an error is noted on this Filing Receipt, please submit a written request for a Filing Receipt Correction. Please provide a copy of this Filing Receipt with the changes noted thereon. If you received a "Notice to File Missing Parts" for this application, please submit any corrections to this Filing Receipt with your reply to the Notice. When the USPTO processes the reply to the Notice, the USPTO will generate another Filing Receipt incorporating the requested corrections**

Applicant(s)

Magnus Goertz, Lidingo, SWEDEN;

Assignment For Published Patent Application

NEONODE, INC., Santa Clara, CA

Power of Attorney: The patent practitioners associated with Customer Number 75660

Domestic Priority data as claimed by applicant

This application is a CON of 10/315,250 12/10/2002 PAT 8095879

Foreign Applications (You may be eligible to benefit from the **Patent Prosecution Highway** program at the USPTO. Please see http://www.uspto.gov for more information.)

If Required, Foreign Filing License Granted: 12/19/2011

The country code and number of your priority application, to be used for filing abroad under the Paris Convention, is **US 13/310,755**

Projected Publication Date: 04/19/2012

Non-Publication Request: No

Early Publication Request: No

Title

USER INTERFACE

Preliminary Class

715

PROTECTING YOUR INVENTION OUTSIDE THE UNITED STATES

Since the rights granted by a U.S. patent extend only throughout the territory of the United States and have no effect in a foreign country, an inventor who wishes patent protection in another country must apply for a patent in a specific country or in regional patent offices. Applicants may wish to consider the filing of an international application under the Patent Cooperation Treaty (PCT). An international (PCT) application generally has the same effect as a regular national patent application in each PCT-member country. The PCT process **simplifies** the filing of patent applications on the same invention in member countries, but **does not result** in a grant of "an international patent" and does not eliminate the need of applicants to file additional documents and fees in countries where patent protection is desired.

Almost every country has its own patent law, and a person desiring a patent in a particular country must make an application for patent in that country in accordance with its particular laws. Since the laws of many countries differ in various respects from the patent law of the United States, applicants are advised to seek guidance from specific foreign countries to ensure that patent rights are not lost prematurely.

Applicants also are advised that in the case of inventions made in the United States, the Director of the USPTO must issue a license before applicants can apply for a patent in a foreign country. The filing of a U.S. patent application serves as a request for a foreign filing license. The application's filing receipt contains further information and guidance as to the status of applicant's license for foreign filing.

Applicants may wish to consult the USPTO booklet, "General Information Concerning Patents" (specifically, the section entitled "Treaties and Foreign Patents") for more information on timeframes and deadlines for filing foreign patent applications. The guide is available either by contacting the USPTO Contact Center at 800-786-9199, or it can be viewed on the USPTO website at http://www.uspto.gov/web/offices/pac/doc/general/index.html.

For information on preventing theft of your intellectual property (patents, trademarks and copyrights), you may wish to consult the U.S. Government website, http://www.stopfakes.gov. Part of a Department of Commerce initiative, this website includes self-help "toolkits" giving innovators guidance on how to protect intellectual property in specific countries such as China, Korea and Mexico. For questions regarding patent enforcement issues, applicants may call the U.S. Government hotline at 1-866-999-HALT (1-866-999-4158).

LICENSE FOR FOREIGN FILING UNDER

Title 35, United States Code, Section 184

Title 37, Code of Federal Regulations, 5.11 & 5.15

GRANTED

The applicant has been granted a license under 35 U.S.C. 184, if the phrase "IF REQUIRED, FOREIGN FILING LICENSE GRANTED" followed by a date appears on this form. Such licenses are issued in all applications where the conditions for issuance of a license have been met, regardless of whether or not a license may be required as

set forth in 37 CFR 5.15. The scope and limitations of this license are set forth in 37 CFR 5.15(a) unless an earlier license has been issued under 37 CFR 5.15(b). The license is subject to revocation upon written notification. The date indicated is the effective date of the license, unless an earlier license of similar scope has been granted under 37 CFR 5.13 or 5.14.

This license is to be retained by the licensee and may be used at any time on or after the effective date thereof unless it is revoked. This license is automatically transferred to any related applications(s) filed under 37 CFR 1.53(d). This license is not retroactive.

The grant of a license does not in any way lessen the responsibility of a licensee for the security of the subject matter as imposed by any Government contract or the provisions of existing laws relating to espionage and the national security or the export of technical data. Licensees should apprise themselves of current regulations especially with respect to certain countries, of other agencies, particularly the Office of Defense Trade Controls, Department of State (with respect to Arms, Munitions and Implements of War (22 CFR 121-128)); the Bureau of Industry and Security, Department of Commerce (15 CFR parts 730-774); the Office of Foreign AssetsControl, Department of Treasury (31 CFR Parts 500+) and the Department of Energy.

NOT GRANTED

No license under 35 U.S.C. 184 has been granted at this time, if the phrase "IF REQUIRED, FOREIGN FILING LICENSE GRANTED" DOES NOT appear on this form. Applicant may still petition for a license under 37 CFR 5.12, if a license is desired before the expiration of 6 months from the filing date of the application. If 6 months has lapsed from the filing date of this application and the licensee has not received any indication of a secrecy order under 35 U.S.C. 181, the licensee may foreign file the application pursuant to 37 CFR 5.15(b).

SelectUSA

The United States represents the largest, most dynamic marketplace in the world and is an unparalleled location for business investment, innovation and commercialization of new technologies. The USA offers tremendous resources and advantages for those who invest and manufacture goods here. Through SelectUSA, our nation works to encourage, facilitate, and accelerate business investment. To learn more about why the USA is the best country in the world to develop technology, manufacture products, and grow your business, visit SelectUSA.gov.

UNITED STATES PATENT AND TRADEMARK OFFICE

UNITED STATES DEPARTMENT OF COMMERCE
United States Patent and Trademark Office
Address: COMMISSIONER FOR PATENTS
P.O. Box 1450
Alexandria, Virginia 22313-1450
www.uspto.gov

APPLICATION NUMBER	FILING OR 371(C) DATE	FIRST NAMED APPLICANT	ATTY. DOCKET NO./TITLE
13/310,755	12/04/2011	Magnus Goertz	NEONODE.P039

CONFIRMATION NO. 1066

75660
Soquel Group, LLC
P.O. Box 691
Soquel, CA 95073

FORMALITIES LETTER

OC000000051828513

Date Mailed: 01/09/2012

NOTICE OF INCOMPLETE REPLY (NONPROVISIONAL)

Filing Date Granted

The U.S. Patent and Trademark Office has received your reply on 12/28/2011 to the Notice to File Missing Parts (Notice) mailed 12/27/2011 and it has been entered into the nonprovisional application. The reply, however, does not include the following items required in the Notice. A complete reply must be timely filed to prevent ABANDONMENT of the above-identified application. Replies should be mailed to: Mail Stop Missing Parts, Commissioner for Patents, P.O. Box 1450, Alexandria VA 22313-1450.

Applicant is given **TWO MONTHS** from the date of the Notice to File Missing Parts (Notice) mailed 12/27/2011 within which to file all required items and pay any fees required below to avoid abandonment. Extensions of time may be obtained by filing a petition accompanied by the extension fee under the provisions of 37 CFR 1.136(a).

Items Required to Avoid Abandonment:

The required items noted below SHOULD be filed along with any items required above. The filing date of this nonprovisional application will be the date of receipt of the items required above.

The applicant needs to satisfy supplemental fees problems indicated below.

The required item(s) identified below must be timely submitted to avoid abandonment:

- Additional claim fees of $**250** as a non-small entity, including any required multiple dependent claim fee, are required. Applicant must submit the additional claim fees or cancel the additional claims for which fees are due.

SUMMARY OF FEES DUE:

Total fee(s) required within **TWO MONTHS** from the date of the Notice is $**-300** for a non-small entity
- Total additional claim fee(s) for this application is $**250**
  - $**250** for **1** independent claims over 3.

(A previous payment of $**550** will be applied to the additional fees indicated above.)

Replies should be mailed to:

Mail Stop Missing Parts
Commissioner for Patents
P.O. Box 1450
Alexandria VA 22313-1450

Registered users of EFS-Web may alternatively submit their reply to this notice via EFS-Web.
https://sportal.uspto.gov/authenticate/AuthenticateUserLocalEPF.html

For more information about EFS-Web please call the USPTO Electronic Business Center at **1-866-217-9197** or visit our website at http://www.uspto.gov/ebc.

If you are not using EFS-Web to submit your reply, you must include a copy of this notice.

/sibrahim/

Office of Data Management, Application Assistance Unit (571) 272-4000, or (571) 272-4200, or 1-888-786-0101

PATENT APPLICATION FEE DETERMINATION RECORD

Substitute for Form PTO-875

Application or Docket Number: 13/310,755

APPLICATION AS FILED - PART I

FOR	(Column 1) NUMBER FILED	(Column 2) NUMBER EXTRA	SMALL ENTITY RATE($)	SMALL ENTITY FEE($)	OR	OTHER THAN SMALL ENTITY RATE($)	OTHER THAN SMALL ENTITY FEE($)
BASIC FEE (37 CFR 1.16(a), (b), or (c))	N/A	N/A	N/A			N/A	380
SEARCH FEE (37 CFR 1.16(k), (i), or (m))	N/A	N/A	N/A			N/A	620
EXAMINATION FEE (37 CFR 1.16(o), (p), or (q))	N/A	N/A	N/A			N/A	250
TOTAL CLAIMS (37 CFR 1.16(i))	18 minus 20 =	*			OR	x 60 =	0.00
INDEPENDENT CLAIMS (37 CFR 1.16(h))	4 minus 3 =	* 1				x 250 =	250
APPLICATION SIZE FEE (37 CFR 1.16(s))	If the specification and drawings exceed 100 sheets of paper, the application size fee due is $310 ($155 for small entity) for each additional 50 sheets or fraction thereof. See 35 U.S.C. 41(a)(1)(G) and 37 CFR 1.16(s).						0.00
MULTIPLE DEPENDENT CLAIM PRESENT (37 CFR 1.16(j))							0.00
* If the difference in column 1 is less than zero, enter "0" in column 2.			TOTAL			TOTAL	1500

APPLICATION AS AMENDED - PART II

		(Column 1) CLAIMS REMAINING AFTER AMENDMENT		(Column 2) HIGHEST NUMBER PREVIOUSLY PAID FOR	(Column 3) PRESENT EXTRA	SMALL ENTITY RATE($)	SMALL ENTITY ADDITIONAL FEE($)	OR	OTHER THAN SMALL ENTITY RATE($)	OTHER THAN SMALL ENTITY ADDITIONAL FEE($)
AMENDMENT A	Total (37 CFR 1.16(i))	*	Minus	**	=	x =		OR	x =	
	Independent (37 CFR 1.16(h))	*	Minus	***	=	x =		OR	x =	
	Application Size Fee (37 CFR 1.16(s))									
	FIRST PRESENTATION OF MULTIPLE DEPENDENT CLAIM (37 CFR 1.16(j))							OR		
						TOTAL ADD'L FEE		OR	TOTAL ADD'L FEE	

		(Column 1) CLAIMS REMAINING AFTER AMENDMENT		(Column 2) HIGHEST NUMBER PREVIOUSLY PAID FOR	(Column 3) PRESENT EXTRA	RATE($)	ADDITIONAL FEE($)	OR	RATE($)	ADDITIONAL FEE($)
AMENDMENT B	Total (37 CFR 1.16(i))	*	Minus	**	=	x =		OR	x =	
	Independent (37 CFR 1.16(h))	*	Minus	***	=	x =		OR	x =	
	Application Size Fee (37 CFR 1.16(s))									
	FIRST PRESENTATION OF MULTIPLE DEPENDENT CLAIM (37 CFR 1.16(j))							OR		
						TOTAL ADD'L FEE		OR	TOTAL ADD'L FEE	

* If the entry in column 1 is less than the entry in column 2, write "0" in column 3.

** If the "Highest Number Previously Paid For" IN THIS SPACE is less than 20, enter "20".

*** If the "Highest Number Previously Paid For" IN THIS SPACE is less than 3, enter "3".

The "Highest Number Previously Paid For" (Total or Independent) is the highest found in the appropriate box in column 1.

UNITED STATES PATENT AND TRADEMARK OFFICE

UNITED STATES DEPARTMENT OF COMMERCE
United States Patent and Trademark Office
Address: COMMISSIONER FOR PATENTS
P.O. Box 1450
Alexandria, Virginia 22313-1450
www.uspto.gov

APPLICATION NUMBER	FILING OR 371(C) DATE	FIRST NAMED APPLICANT	ATTY. DOCKET NO./TITLE
13/310,755	12/04/2011	Magnus Goertz	NEONODE.P039

CONFIRMATION NO. 1066

75660
Soquel Group, LLC
P.O. Box 691
Soquel, CA 95073

POA ACCEPTANCE LETTER

OC000000051824685

Date Mailed: 01/09/2012

NOTICE OF ACCEPTANCE OF POWER OF ATTORNEY

This is in response to the Power of Attorney filed 12/28/2011.

The Power of Attorney in this application is accepted. Correspondence in this application will be mailed to the above address as provided by 37 CFR 1.33.

/rdpaz/

Office of Data Management, Application Assistance Unit (571) 272-4000, or (571) 272-4200, or 1-888-786-0101

Attorney's Docket No.: NEONODE.P039 *PATENT*

IN THE UNITED STATES PATENT AND TRADEMARK OFFICE

In Re Patent Application of:	)	
	)	Examiner: N/A
Magnus Goertz	)	
	)	Art Unit: 2172
Application No: 13/310,755	)	
	)	
Filed: December 4, 2011	)	
	)	
For: USER INTERFACE	)	
	)	
	)	

Commissioner for Patents
P. O. Box 1450
Alexandria, VA 22313-1450

REPLY TO NOTICE TO FILE CORRECTED APPLICATION PAPERS

In response to the Notice to File Corrected Application Papers of December 27, 2011, applicant is submitting herewith a Preliminary Amendment with the required replacement abstract and a new set of claims.

Respectfully submitted,
SOQUEL GROUP LLC

Dated: December 28, 2011

/Marc A. Berger/
Marc A. Berger
Reg. No. 44,029

P.O. Box 691
Soquel, CA 95073
(831) 426-8200
Customer No. 75660

Attorney's Docket No.: NEONODE.P039 *PATENT*

IN THE UNITED STATES PATENT AND TRADEMARK OFFICE

In Re Patent Application of:	)	
	)	Examiner: N/A
Magnus Goertz	)	
	)	Art Unit: 2172
Application No: 13/310,755	)	
	)	
Filed: December 4, 2011	)	
	)	
For: USER INTERFACE	)	
	)	
_____	)	

Mail Stop AMENDMENT
Commissioner for Patents
P. O. Box 1450
Alexandria, VA 22313-1450

PRELIMINARY AMENDMENT

Prior to examination of the subject application, applicant requests that the application be amended as follows.

IN THE ABSTRACT:

Please replace the Abstract with the following replacement text.

A non-transitory computer readable medium storing computer program code which, when executed by a mobile handheld device that has a touch sensitive display, instructs the device (i) to display a notification of an incoming phone call, and (ii) to accept the call in response to a multi-step operation comprising an object touching the touch sensitive display, and the object gliding along the touch sensitive display in a specific direction.

IN THE DESCRIPTION:

Please amend the specification as follows.

Please add the following text immediately after page 1, line 1:

PRIORITY REFERENCE TO RELATED APPLICATIONS

This application is a continuation of U.S. Application No. 10/315,250, entitled USER INTERFACE FOR MOBILE HANDHELD COMPUTER UNIT, filed on December 10, 2002 by inventor Magnus George Goertz.

Page 1, ninth full paragraph:

Since the users have gotten used to small handheld units, it is hard to move towards larger units. This has led to foldable keyboards, different kinds [[if]] of joy sticks and different kinds of touch sensitive displays and pads intended to help in providing a user interface that is suitable for small handheld ~~compute~~ computer units.

Page 2, first full paragraph:

It is a problem to provide a user-friendly interface that is adapted to handle a large amount of information and different kinds of traditional computer-related applications on a small handheld computer unit.

Page 3, sixth full paragraph:

In order to provide a task and file management in a user interface for a handheld mobile computer, the present invention teaches that, if the third function is activated, the display area is adapted to display a list with a library of available applications and files on the

computer [[unit]] unit. A selection of an application will start the application, and a selection of a file will open the file in an application intended for the file.

Page 7, fifth full paragraph:

It should [[b]] be understood that all lists in the computer unit, such as a list of contact information in an address book, a list of e-mail messages in a mailbox, or a telephone log, can be managed in the above described manner.

Page 7, sixth full paragraph:

The list 231 can be adapted to present only files or only applications. In this case, the top area of the list 231 can present a field 233 through which the content [[if]] of the list 231 can be altered. If the list only presents files, then the field 233 can display a representation of a task manager and a selection of the field 233 will cause the list 231 to alter to present only applications, and if the list 231 only presents applications, then the field 233 displays a representation of a file manager and a selection of the field 233 will cause the list 231 to alter and present only files.

Page 7, eighth full paragraph:

Figure 9 shows that if the number of applications and/or files in the list 231 exceeds the number of applications and/or files that can be presented on the display area 3, and if the object 4 is moved to the top or bottom position of the display area, then lifted, replaced on the display area, and then again moved to the top or bottom of the display area, then the content of the display area will be replaced one whole page, meaning that if the object 4 is positioned N at the bottom 3b of the

display area 3, then lifted, replaced on the display area 3, and then again moved M to the bottom 3b of the display area 3, then the content 31 of the display area 3 will be replaced P by the following applications and/or files 32 in the list 231. In the same way, but not shown in the figure, if the object is ~~position~~ positioned at the top of the display area, then lifted, replaced on the display area 3, and then again moved to the top of the display area, the content of the display area will be replaced by the preceding applications and/or files in the list.

IN THE CLAIMS:

Please cancel claims **1** – **18**.

Please add the following new claims.

19. (new) A non-transitory computer readable medium storing computer program code which, when executed by a mobile handheld device that has a touch sensitive display, instructs the device (i) to display a notification of an incoming phone call, and (ii) to accept the call in response to a multi-step operation comprising an object touching the touch sensitive display, and the object gliding along the touch sensitive display in a specific direction.

20. (new) The computer readable medium of claim **19**, wherein the program code instructs the device (iii) to disconnect the call in response to a multi-step operation comprising an object touching the touch sensitive area, and the object gliding the object along the touch sensitive display in a direction opposite to the specific direction.

21. (new) A computer readable medium storing computer program code, which, when executed by a mobile handheld device that has a touch sensitive display, instructs the device (i) to display a representation of a function in the touch sensitive display, (ii) to display a plurality of icons in the touch sensitive display, each icon representing an application, in response to a multi-step operation comprising an object touching the touch sensitive display at a location where the function representation is displayed, and the object gliding along the touch sensitive display away from the touched location, and (iii) to activate one of the applications in response to a tap on its icon.

22. (new) The computer readable medium of claim **21**, wherein the plurality of applications includes a lock device application.

23. (new) The computer readable medium of claim **21**, wherein the plurality of applications includes an alarm clock application.

24. (new) The computer readable medium of claim **21**, wherein the device comprises a clock, wherein the plurality of applications includes an application for setting the time for the clock.

25. (new) The computer readable medium of claim **21**, wherein the plurality of applications includes an application for configuring a background picture for the touch sensitive display.

26. (new) The computer readable medium of claim **21**, wherein the plurality of applications includes a help application.

27. (new) The computer readable medium of claim **21**, wherein the device is alternately used by at least two users, and wherein the plurality of applications includes an application for configuring the unit for each user.

28. (new) A computer readable medium storing computer program code, which, when executed by a mobile handheld device having a touch sensitive display, instructs the device (i) to display a list of files of a first type, and (ii) to change the list to display files of a second type in response to a tap on the display.

29. (new) The computer readable medium of claim **28**, wherein the computer program code instructs the device to (iii) display a representation of a file type, and wherein the device changes the list in response to a tap on the representation of the file type.

30. (new) The computer readable medium of claim **28**, wherein the files of the first type are data files, and the files of the second type are application files.

31. (new) A computer readable medium storing computer program code, which, when executed by a mobile handheld device that has a touch sensitive display, instructs the device to (i) to display a data input keypad for a user to enter data, and to display a text field for entered data, (ii) to display representations of a plurality of applications, and (iii) to activate one of the applications and to have the application use the entered data, in response to a tap on its representation.

32. (new) The computer readable medium of claim **31**, wherein the plurality of applications includes a telephone application that uses the entered data as a telephone number.

33. (new) The computer readable medium of claim **31**, wherein the plurality of applications includes a text messaging application that uses the entered data as a text message.

34. (new) The computer readable medium of claim **33**, wherein the text messaging application is a short messaging service (SMS) application.

35. (new) The computer readable medium of claim **33**, wherein the text messaging application is an e-mail application.

36. (new) The computer readable medium of claim **31**, wherein the plurality of applications includes a contact list application that stores the entered data as retrievable contact information.

REMARKS

Applicant has canceled claims **1** – **18** and added new claims **19 – 36** to properly claim the present invention. No new matter has been introduced.

Regarding novelty of independent claim **19**, the closest prior art known to applicant is U.S. Patent No. 6,639,584 to Li ("Li") and EPO publication number 0330767 to Araki et al. ("Araki"). Li and Araki both describe a touch screen user interface employing a variety of different finger gestures for an MP3 or cassette player and also for a radio (Araki/ page 6 lines 33 - 57; FIGS. 9(a) and 9(b); Li/ col. 5, lines 40 - 65, FIGS. 2(a) – 2(k) and 3 (a) – 3(d)).

However, Li and Araki do not disclose or suggest display of an incoming call, nor do they disclose or suggest accepting the call when the user performs a multi-step operation comprising touching a touch sensitive display with an object, and gliding the object along the touch sensitive area in a specific direction.

Regarding novelty of independent claim **21**, the closest prior art known to applicant is "Palm Organizer A Quickstart Guide" to Carlson ("Carlson"), "Palm Pilot: The Ultimate Guide, 2nd Edition" to Pogue ("Pogue") and "T-Cube: A Fast, Self-Disclosing, Pen-Based Alphabet" to Venolia et al. ("Venolia"). Carlson and Pogue describe a touch screen command whereby a single stroke of a stylus from a first section of the touch screen to a second section activates a single function (Carlson/ bottom paragraph on page 40, FIG. 2.22; Pogue/ Section 2.1.7, FIG. 2.5). Venolia describes a pen-drag typing system whereby a target divided into nine cells is displayed on a touch screen. Touching one of the nine target cells with a stylus opens a pie menu divided into eight wedges with eight different letters. Dragging the stylus in one of

eight directions highlights a wedge. Lifting the stylus enters the highlighted letter to the system as input.

However, in Carlson and Pogue the pen stroke does not touch the screen at a location where a representation of the pen stroke function is provided. In addition, the pen stroke in Carlson and Pogue does not cause the device to display a plurality of icons representing various applications. Venolia describes a two-step user interface for typing but does not disclose or suggest the two steps of a multi-step touch and glide operation followed by a tap on a representative icon. In addition, Venolia relates to a typing user interface, and does not disclose or suggest an interface for launching applications.

Regarding novelty of independent claim **28**, the closest prior art known to applicant is U.S. Patent No. 6,734,883 to Wynn et al. ("Wynn"). Wynn describes a drop-down list with a label indicating the type of items in the list (Wynn/ col. 3 lines 4 - 31, FIG. 3).

However, Wynn does not disclose or suggest enabling a user to change the type of information presented in a list by performing a tap on the screen. The label 31 in Wynn is static and is purely informative. Wynn provides examples of various types of information that can be provided in the drop-down list (Wynn/ col. 3, lines 23 - 31), but does not disclose or suggest that a user actively changes the type information provided in the list.

Regarding novelty of independent claim **31**, the closest prior art known to applicant is "Palm Organizer A Quickstart Guide" to Carlson ("Carlson"). Carlson describes a touch screen user interface having an input keypad and display (Carlson/ page 30, FIG. 2.7) and a drop-down menu in a memo application for beaming an existing memo to a remote device (Carlson/ page 28, FIG. 2.4).

However, Carlson does not disclose or suggest enabling a user to select from a plurality of different applications to use entered text. Carlson FIG. 2.4 is a screenshot of a memo application that provides only one option to use data in an existing (saved) memo by beaming it to a remote device. In distinction, the present invention enables a user to select from among several applications to use entered text.

Support for new claims in original specification

New independent claim **19** for a computer readable medium is supported in the original specification at least by page 1, lines 21 – 23 and page 8, lines 15 - 20, by FIG. 11 and by original claim **12**. In particular, page 8, lines 16 and 17 recite that the touch-and-glide operation "*moves the active application, function, service or setting on one step forwards*". In the case of a phone application (described at page 1, lines 21 - 23), an incoming call is accepted.

New dependent claim **20** relates to closing an active (phone) application, and is supported in the original specification at least by page 8, lines 15 – 20, and by to FIG. 12.

New independent claim **21** for a computer readable medium is supported in the original specification at least by page 5, line 24 – page 6, line 3, by page 6, lines 12 and 13, and by FIGS. 2 and 4.

New dependent claims **22** - **27** relate to various applications that may be executed by the device of independent claim **21**. Claim **22** is supported in the original specification at least by icon 216 in FIG. 3. Claim **23** is supported in the original specification at least by page 6, lines 8 – 11 and by icon 215 in FIG. 3. Claims **24** and **25** are supported in the original specification at least by page 6, lines 8 – 11. Claim **26** is supported in the original specification at least by page 6, lines

8 – 11 and by icon 211 in FIG. 3. Claim **27** is supported in the original specification at least by page 6, lines 8 – 11 and by icon 213 in FIG. 3.

New independent claim **28** for a computer readable medium is supported in the original specification at least by page 7, lines 19 - 26.

New dependent claim **29** includes the limitation of using a representation of a file type displayed on the touch sensitive screen to change the type of files in a displayed list, and is supported in the original specification at least by page 7, lines 19 - 26.

New dependent claim **30** includes the limitation that the two types of files are data files and application files, and is supported in the original specification at least by page 7, lines 19 - 26.

New independent claim **31** for a computer readable medium is supported in the original specification at least by page 3, lines 15 – 21, and by page 6, lines 30 - 34.

New dependent claims **32** – **36** relate to various applications that may be executed by the device of independent claim **31** using entered text, and are supported in the original specification at least by page 3, lines 15 – 21, and by page 6, lines 30 - 34.

Favorable allowance of the application is respectfully requested.

If any matters can be resolved by telephone, applicant requests that the Patent and Trademark Office please contact the applicant at the telephone number listed below.

Respectfully submitted,
SOQUEL GROUP LLC

Dated: December 28, 2011

/Marc A. Berger/
Marc A. Berger
Reg. No. 44,029

P.O. Box 691
Soquel, CA 95073
(831) 426-8200
Customer No. 75660

Electronic Acknowledgement Receipt

EFS ID:	11715266
Application Number:	13310755
International Application Number:	
Confirmation Number:	1066
Title of Invention:	USER INTERFACE
First Named Inventor/Applicant Name:	Magnus Goertz
Customer Number:	75660
Filer:	Marc Aron Berger
Filer Authorized By:	
Attorney Docket Number:	NEONODE.P039
Receipt Date:	28-DEC-2011
Filing Date:	04-DEC-2011
Time Stamp:	00:06:54
Application Type:	Utility under 35 USC 111(a)

Payment information:

Submitted with Payment	no

File Listing:

Document Number	Document Description	File Name	File Size(Bytes)/ Message Digest	Multi Part /.zip	Pages (if appl.)
1	Applicant Response to Pre-Exam Formalities Notice	NEONODE-P039_ReplyToNoticeToFileCorrectedApplicationPapers.pdf	40435 869c78e2ebf7c65b35ee06ef513c7aa3893a1e06	no	1

Warnings:	
Information:	

2		NEONODE-P039_PreliminaryAmendment_12-28-2011.pdf	82847 86da80ec8581743f807896e5483091c5f7c41704	yes	14

	Multipart Description/PDF files in .zip description		
	Document Description	**Start**	**End**
	Preliminary Amendment	1	1
	Abstract	2	2
	Specification	3	5
	Claims	6	9
	Applicant Arguments/Remarks Made in an Amendment	10	14

Warnings:	
Information:	
Total Files Size (in bytes):	123282

This Acknowledgement Receipt evidences receipt on the noted date by the USPTO of the indicated documents, characterized by the applicant, and including page counts, where applicable. It serves as evidence of receipt similar to a Post Card, as described in MPEP 503.

New Applications Under 35 U.S.C. 111
If a new application is being filed and the application includes the necessary components for a filing date (see 37 CFR 1.53(b)-(d) and MPEP 506), a Filing Receipt (37 CFR 1.54) will be issued in due course and the date shown on this Acknowledgement Receipt will establish the filing date of the application.

National Stage of an International Application under 35 U.S.C. 371
If a timely submission to enter the national stage of an international application is compliant with the conditions of 35 U.S.C. 371 and other applicable requirements a Form PCT/DO/EO/903 indicating acceptance of the application as a national stage submission under 35 U.S.C. 371 will be issued in addition to the Filing Receipt, in due course.

New International Application Filed with the USPTO as a Receiving Office
If a new international application is being filed and the international application includes the necessary components for an international filing date (see PCT Article 11 and MPEP 1810), a Notification of the International Application Number and of the International Filing Date (Form PCT/RO/105) will be issued in due course, subject to prescriptions concerning national security, and the date shown on this Acknowledgement Receipt will establish the international filing date of the application.

PTO/SB/81 (01-09)
Approved for use through 11/30/2011. OMB 0651-0035
U.S. Patent and Trademark Office; U.S. DEPARTMENT OF COMMERCE
Under the Paperwork Reduction Act of 1995, no persons are required to respond to a collection of information unless it displays a valid OMB control number.

POWER OF ATTORNEY OR REVOCATION OF POWER OF ATTORNEY WITH A NEW POWER OF ATTORNEY AND CHANGE OF CORRESPONDENCE ADDRESS

Application Number	13310755
Filing Date	December 4, 2011
First Named Inventor	Magnus Goertz
Title	USER INTERFACE
Art Unit	2172
Examiner Name	
Attorney Docket Number	NEONODE.P039

I hereby revoke all previous powers of attorney given in the above-identified application.

☐ A Power of Attorney is submitted herewith.

OR

☒ I hereby appoint Practitioner(s) associated with the following Customer Number as my/our attorney(s) or agent(s) to prosecute the application identified above, and to transact all business in the United States Patent and Trademark Office connected therewith: 75660

OR

☐ I hereby appoint Practitioner(s) named below as my/our attorney(s) or agent(s) to prosecute the application identified above, and to transact all business in the United States Patent and Trademark Office connected therewith:

Practitioner(s) Name	Registration Number

Please recognize or change the correspondence address for the above-identified application to:

☒ The address associated with the above-mentioned Customer Number.

OR

☐ The address associated with Customer Number:

OR

☐ Firm or Individual Name					
Address					
City		State		Zip	
Country					
Telephone		Email			

I am the:

☐ Applicant/Inventor.

OR

☒ Assignee of record of the entire interest. See 37 CFR 3.71.
Statement under 37 CFR 3.73(b) (Form PTO/SB/96) submitted herewith or filed on _____

SIGNATURE of Applicant or Assignee of Record

Signature	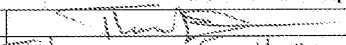	Date	2011-12-28
Name	Thomas Eriksson	Telephone	+46 70852 1337
Title and Company	CEO, NEONODE INC		

NOTE: Signatures of all the inventors or assignees of record of the entire interest or their representative(s) are required. Submit multiple forms if more than one signature is required, see below*.

☐ *Total of _____ forms are submitted.

This collection of information is required by 37 CFR 1.31, 1.32 and 1.33. The information is required to obtain or retain a benefit by the public which is to file (and by the USPTO to process) an application. Confidentiality is governed by 35 U.S.C. 122 and 37 CFR 1.11 and 1.14. This collection is estimated to take 3 minutes to complete, including gathering, preparing, and submitting the completed application form to the USPTO. Time will vary depending upon the individual case. Any comments on the amount of time you require to complete this form and/or suggestions for reducing this burden, should be sent to the Chief Information Officer, U.S. Patent and Trademark Office, U.S. Department of Commerce, P.O. Box 1450, Alexandria, VA 22313-1450. DO NOT SEND FEES OR COMPLETED FORMS TO THIS ADDRESS. SEND TO: **Commissioner for Patents, P.O. Box 1450, Alexandria, VA 22313-1450.**

If you need assistance in completing the form, call 1-800-PTO-9199 and select option 2.

PTO/SB/96 (07-09)
Approved for use through 07/31/2012. OMB 0651-0031
U.S. Patent and Trademark Office; U.S. DEPARTMENT OF COMMERCE
Under the Paperwork Reduction Act of 1995, no persons are required to respond to a collection of information unless it displays a valid OMB control number.

STATEMENT UNDER 37 CFR 3.73(b)

Applicant/Patent Owner: Neonode Inc

Application No./Patent No.: 10310755 Filed/Issue Date: December 4, 2011

Titled: USER INTERFACE

Neonode Inc , a corporation

(Name of Assignee) (Type of Assignee, e.g., corporation, partnership, university, government agency, etc.

states that it is:

1. [X] the assignee of the entire right, title, and interest in;

2. [ ] an assignee of less than the entire right, title, and interest in (The extent (by percentage) of its ownership interest is _____ %); or

3. [ ] the assignee of an undivided interest in the entirety of (a complete assignment from one of the joint inventors was made)

the patent application/patent identified above, by virtue of either:

A. [ ] An assignment from the inventor(s) of the patent application/patent identified above. The assignment was recorded in the United States Patent and Trademark Office at Reel _____, Frame _____, or for which a copy therefore is attached.

OR

B. [X] A chain of title from the inventor(s), of the patent application/patent identified above, to the current assignee as follows:

1. From: Magnus Goertz To: Neonode Sweden AB

The document was recorded in the United States Patent and Trademark Office at
Reel 018163, Frame 0611, or for which a copy thereof is attached.

2. From: Neonode Sweden AB To: Neonode AB

The document was recorded in the United States Patent and Trademark Office at
Reel 018137, Frame 0448, or for which a copy thereof is attached.

3. From: Neonode AB To: Neonode Inc

The document was recorded in the United States Patent and Trademark Office at
Reel 021963, Frame 0667, or for which a copy thereof is attached.

[ ] Additional documents in the chain of title are listed on a supplemental sheet(s).

[ ] As required by 37 CFR 3.73(b)(1)(i), the documentary evidence of the chain of title from the original owner to the assignee was, or concurrently is being, submitted for recordation pursuant to 37 CFR 3.11.

[NOTE: A separate copy (*i.e.*, a true copy of the original assignment document(s)) must be submitted to Assignment Division in accordance with 37 CFR Part 3, to record the assignment in the records of the USPTO. See MPEP 302.08]

The undersigned (whose title is supplied below) is authorized to act on behalf of the assignee.

Signature 2011-12-28 Date

Thomas Eriksson CEO

Printed or Typed Name Title

This collection of information is required by 37 CFR 3.73(b). The information is required to obtain or retain a benefit by the public which is to file (and by the USPTO to process) an application. Confidentiality is governed by 35 U.S.C. 122 and 37 CFR 1.11 and 1.14. This collection is estimated to take 12 minutes to complete, including gathering, preparing, and submitting the completed application form to the USPTO. Time will vary depending upon the individual case. Any comments on the amount of time you require to complete this form and/or suggestions for reducing this burden, should be sent to the Chief Information Officer, U.S. Patent and Trademark Office, U.S. Department of Commerce, P.O. Box 1450, Alexandria, VA 22313-1450. DO NOT SEND FEES OR COMPLETED FORMS TO THIS ADDRESS. **SEND TO: Commissioner for Patents, P.O. Box 1450, Alexandria, VA 22313-1450.**

If you need assistance in completing the form, call 1-800-PTO-9199 and select option 2.

Electronic Acknowledgement Receipt

EFS ID:	11715908
Application Number:	13310755
International Application Number:	
Confirmation Number:	1066
Title of Invention:	USER INTERFACE
First Named Inventor/Applicant Name:	Magnus Goertz
Customer Number:	75660
Filer:	Marc Aron Berger
Filer Authorized By:	
Attorney Docket Number:	NEONODE.P039
Receipt Date:	28-DEC-2011
Filing Date:	04-DEC-2011
Time Stamp:	10:17:08
Application Type:	Utility under 35 USC 111(a)

Payment information:

Submitted with Payment	no

File Listing:

Document Number	Document Description	File Name	File Size(Bytes)/ Message Digest	Multi Part /.zip	Pages (if appl.)
1	Power of Attorney	NEONODE-P039_PowerOfAttorney.pdf	825891 00af2ff1ecdb86fbc2a2f3fcfd592d981707ae5c	no	1
Warnings:					
Information:					

2	Assignee showing of ownership per 37 CFR 3.73(b).	NEONODE-P039_StatementUnder37CFR3-73b.pdf	789541 86653f5b2cb7047a1c80f4bac1b0ddb3b6e52099	no	1
Warnings:					
Information:					
			Total Files Size (in bytes):	1615432	

This Acknowledgement Receipt evidences receipt on the noted date by the USPTO of the indicated documents, characterized by the applicant, and including page counts, where applicable. It serves as evidence of receipt similar to a Post Card, as described in MPEP 503.

New Applications Under 35 U.S.C. 111
If a new application is being filed and the application includes the necessary components for a filing date (see 37 CFR 1.53(b)-(d) and MPEP 506), a Filing Receipt (37 CFR 1.54) will be issued in due course and the date shown on this Acknowledgement Receipt will establish the filing date of the application.

National Stage of an International Application under 35 U.S.C. 371
If a timely submission to enter the national stage of an international application is compliant with the conditions of 35 U.S.C. 371 and other applicable requirements a Form PCT/DO/EO/903 indicating acceptance of the application as a national stage submission under 35 U.S.C. 371 will be issued in addition to the Filing Receipt, in due course.

New International Application Filed with the USPTO as a Receiving Office
If a new international application is being filed and the international application includes the necessary components for an international filing date (see PCT Article 11 and MPEP 1810), a Notification of the International Application Number and of the International Filing Date (Form PCT/RO/105) will be issued in due course, subject to prescriptions concerning national security, and the date shown on this Acknowledgement Receipt will establish the international filing date of the application.

UNITED STATES PATENT AND TRADEMARK OFFICE

UNITED STATES DEPARTMENT OF COMMERCE
United States Patent and Trademark Office
Address: COMMISSIONER FOR PATENTS
P.O. Box 1450
Alexandria, Virginia 22313-1450
www.uspto.gov

APPLICATION NUMBER	FILING OR 371(C) DATE	FIRST NAMED APPLICANT	ATTY. DOCKET NO./TITLE
13/310,755	12/04/2011	Magnus Goertz	NEONODE.P039

CONFIRMATION NO. 1066

75660
Soquel Group, LLC
P.O. Box 691
Soquel, CA 95073

FORMALITIES LETTER

OC000000051649147

Date Mailed: 12/27/2011

NOTICE TO FILE CORRECTED APPLICATION PAPERS

Filing Date Granted

An application number and filing date have been accorded to this application. The application is informal since it does not comply with the regulations for the reason(s) indicated below. Applicant is given TWO MONTHS from the date of this Notice within which to correct the informalities indicated below. Extensions of time may be obtained by filing a petition accompanied by the extension fee under the provisions of 37 CFR 1.136(a).

The required item(s) identified below must be timely submitted to avoid abandonment:

- A replacement abstract not exceeding 150 words in length and commencing on a separate sheet in compliance with 37 CFR 1.72(b) and 37 CFR 1.121 is required.

Applicant is cautioned that correction of the above items may cause the specification and drawings page count to exceed 100 pages. If the specification and drawings exceed 100 pages, applicant will need to submit the required application size fee.

The applicant needs to satisfy supplemental fees problems indicated below.

The required item(s) identified below must be timely submitted to avoid abandonment:

- Additional claim fees of $**450** as a non-small entity, including any required multiple dependent claim fee, are required. Applicant must submit the additional claim fees or cancel the additional claims for which fees are due.

SUMMARY OF FEES DUE:

Total fee(s) required within **TWO MONTHS** from the date of this Notice is $**450** for a non-small entity
- Total additional claim fee(s) for this application is $**450**
  - $**450** for multiple dependent claim surcharge.

Replies should be mailed to:

Mail Stop Missing Parts
Commissioner for Patents
P.O. Box 1450
Alexandria VA 22313-1450

Registered users of EFS-Web may alternatively submit their reply to this notice via EFS-Web.
https://sportal.uspto.gov/authenticate/AuthenticateUserLocalEPF.html

For more information about EFS-Web please call the USPTO Electronic Business Center at **1-866-217-9197** or visit our website at http://www.uspto.gov/ebc.

If you are not using EFS-Web to submit your reply, you must include a copy of this notice.

/tpetros/

Office of Data Management, Application Assistance Unit (571) 272-4000, or (571) 272-4200, or 1-888-786-0101

MULTIPLE DEPENDENT CLAIM FEE CALCULATION SHEET

Substitute for Form PTO-1360
(For use with Form PTO/SB/06)

Application Number	Filing Date
13310755	

Applicant(s) Magnus Goertz

* May be used for additional claims or amendments

CLAIMS	AS FILED		AFTER FIRST AMENDMENT		AFTER SECOND AMENDMENT	
	Indep	Depend	Indep	Depend	Indep	Depend
1	1					
2		1				
3		1				
4		1				
5		1				
6		1				
7		1				
8		1				
9		2				
10		2				
11		2				
12		(1)				
13		(1)				
14		(1)				
15		(1)				
16		(1)				
17		(1)				
18		(1)				
19						
20						
21						
22						
23						
24						
25						
26						
27						
28						
29						
30						
31						
32						
33						
34						
35						
36						
37						
38						
39						
40						
41						
42						
43						
44						
45						
46						
47						
48						
49						
50						
Total Indep	1		0		0	
Total Depend	20	↵	0	↵	0	↵
Total Claims	21		0		0	

	*		*		*	
	Indep	Depend	Indep	Depend	Indep	Depend
51						
52						
53						
54						
55						
56						
57						
58						
59						
60						
61						
62						
63						
64						
65						
66						
67						
68						
69						
70						
71						
72						
73						
74						
75						
76						
77						
78						
79						
80						
81						
82						
83						
84						
85						
86						
87						
88						
89						
90						
91						
92						
93						
94						
95						
96						
97						
98						
99						
100						

PATENT APPLICATION FEE DETERMINATION RECORD

Substitute for Form PTO-875

Application or Docket Number: 13/310,755

APPLICATION AS FILED - PART I

FOR	(Column 1) NUMBER FILED	(Column 2) NUMBER EXTRA	SMALL ENTITY RATE($)	SMALL ENTITY FEE($)	OR	OTHER THAN SMALL ENTITY RATE($)	OTHER THAN SMALL ENTITY FEE($)
BASIC FEE (37 CFR 1.16(a), (b), or (c))	N/A	N/A	N/A			N/A	380
SEARCH FEE (37 CFR 1.16(k), (i), or (m))	N/A	N/A	N/A			N/A	620
EXAMINATION FEE (37 CFR 1.16(o), (p), or (q))	N/A	N/A	N/A			N/A	250
TOTAL CLAIMS (37 CFR 1.16(i))	21 minus 20 =	* 1			OR	x 60 =	60
INDEPENDENT CLAIMS (37 CFR 1.16(h))	1 minus 3 =	*				x 250 =	0.00
APPLICATION SIZE FEE (37 CFR 1.16(s))	If the specification and drawings exceed 100 sheets of paper, the application size fee due is $310 ($155 for small entity) for each additional 50 sheets or fraction thereof. See 35 U.S.C. 41(a)(1)(G) and 37 CFR 1.16(s).						0.00
MULTIPLE DEPENDENT CLAIM PRESENT (37 CFR 1.16(j))							450
* If the difference in column 1 is less than zero, enter "0" in column 2.			TOTAL			TOTAL	1760

APPLICATION AS AMENDED - PART II

		(Column 1) CLAIMS REMAINING AFTER AMENDMENT		(Column 2) HIGHEST NUMBER PREVIOUSLY PAID FOR	(Column 3) PRESENT EXTRA	SMALL ENTITY RATE($)	SMALL ENTITY ADDITIONAL FEE($)	OR	OTHER THAN SMALL ENTITY RATE($)	OTHER THAN SMALL ENTITY ADDITIONAL FEE($)
AMENDMENT A	Total (37 CFR 1.16(i))	*	Minus	**	=	x =		OR	x =	
	Independent (37 CFR 1.16(h))	*	Minus	***	=	x =		OR	x =	
	Application Size Fee (37 CFR 1.16(s))									
	FIRST PRESENTATION OF MULTIPLE DEPENDENT CLAIM (37 CFR 1.16(j))							OR		
						TOTAL ADD'L FEE		OR	TOTAL ADD'L FEE	

		(Column 1) CLAIMS REMAINING AFTER AMENDMENT		(Column 2) HIGHEST NUMBER PREVIOUSLY PAID FOR	(Column 3) PRESENT EXTRA	RATE($)	ADDITIONAL FEE($)	OR	RATE($)	ADDITIONAL FEE($)
AMENDMENT B	Total (37 CFR 1.16(i))	*	Minus	**	=	x =		OR	x =	
	Independent (37 CFR 1.16(h))	*	Minus	***	=	x =		OR	x =	
	Application Size Fee (37 CFR 1.16(s))									
	FIRST PRESENTATION OF MULTIPLE DEPENDENT CLAIM (37 CFR 1.16(j))							OR		
						TOTAL ADD'L FEE		OR	TOTAL ADD'L FEE	

* If the entry in column 1 is less than the entry in column 2, write "0" in column 3.

** If the "Highest Number Previously Paid For" IN THIS SPACE is less than 20, enter "20".

*** If the "Highest Number Previously Paid For" IN THIS SPACE is less than 3, enter "3".

The "Highest Number Previously Paid For" (Total or Independent) is the highest found in the appropriate box in column 1.

UNITED STATES PATENT AND TRADEMARK OFFICE

UNITED STATES DEPARTMENT OF COMMERCE
United States Patent and Trademark Office
Address: COMMISSIONER FOR PATENTS
P.O. Box 1450
Alexandria, Virginia 22313-1450
www.uspto.gov

APPLICATION NUMBER	FILING or 371(c) DATE	GRP ART UNIT	FIL FEE REC'D	ATTY.DOCKET.NO	TOT CLAIMS	IND CLAIMS
13/310,755	12/04/2011	2172	1800	NEONODE.P039	18	1

CONFIRMATION NO. 1066

75660
Soquel Group, LLC
P.O. Box 691
Soquel, CA 95073

FILING RECEIPT

OC000000051649146

Date Mailed: 12/27/2011

Receipt is acknowledged of this non-provisional patent application. The application will be taken up for examination in due course. Applicant will be notified as to the results of the examination. Any correspondence concerning the application must include the following identification information: the U.S. APPLICATION NUMBER, FILING DATE, NAME OF APPLICANT, and TITLE OF INVENTION. Fees transmitted by check or draft are subject to collection. Please verify the accuracy of the data presented on this receipt. **If an error is noted on this Filing Receipt, please submit a written request for a Filing Receipt Correction. Please provide a copy of this Filing Receipt with the changes noted thereon. If you received a "Notice to File Missing Parts" for this application, please submit any corrections to this Filing Receipt with your reply to the Notice. When the USPTO processes the reply to the Notice, the USPTO will generate another Filing Receipt incorporating the requested corrections**

Applicant(s)

Magnus Goertz, Lidingo, SWEDEN;

Assignment For Published Patent Application

NEONODE, INC., Santa Clara, CA

Power of Attorney: None

Domestic Priority data as claimed by applicant

This application is a CON of 10/315,250 12/10/2002 PAT 8095879

Foreign Applications (You may be eligible to benefit from the **Patent Prosecution Highway** program at the USPTO. Please see http://www.uspto.gov for more information.)

If Required, Foreign Filing License Granted: 12/19/2011

The country code and number of your priority application, to be used for filing abroad under the Paris Convention, is **US 13/310,755**

Projected Publication Date: To Be Determined - pending completion of Corrected Papers

Non-Publication Request: No

Early Publication Request: No

Title

USER INTERFACE

Preliminary Class

715

PROTECTING YOUR INVENTION OUTSIDE THE UNITED STATES

Since the rights granted by a U.S. patent extend only throughout the territory of the United States and have no effect in a foreign country, an inventor who wishes patent protection in another country must apply for a patent in a specific country or in regional patent offices. Applicants may wish to consider the filing of an international application under the Patent Cooperation Treaty (PCT). An international (PCT) application generally has the same effect as a regular national patent application in each PCT-member country. The PCT process **simplifies** the filing of patent applications on the same invention in member countries, but **does not result** in a grant of "an international patent" and does not eliminate the need of applicants to file additional documents and fees in countries where patent protection is desired.

Almost every country has its own patent law, and a person desiring a patent in a particular country must make an application for patent in that country in accordance with its particular laws. Since the laws of many countries differ in various respects from the patent law of the United States, applicants are advised to seek guidance from specific foreign countries to ensure that patent rights are not lost prematurely.

Applicants also are advised that in the case of inventions made in the United States, the Director of the USPTO must issue a license before applicants can apply for a patent in a foreign country. The filing of a U.S. patent application serves as a request for a foreign filing license. The application's filing receipt contains further information and guidance as to the status of applicant's license for foreign filing.

Applicants may wish to consult the USPTO booklet, "General Information Concerning Patents" (specifically, the section entitled "Treaties and Foreign Patents") for more information on timeframes and deadlines for filing foreign patent applications. The guide is available either by contacting the USPTO Contact Center at 800-786-9199, or it can be viewed on the USPTO website at http://www.uspto.gov/web/offices/pac/doc/general/index.html.

For information on preventing theft of your intellectual property (patents, trademarks and copyrights), you may wish to consult the U.S. Government website, http://www.stopfakes.gov. Part of a Department of Commerce initiative, this website includes self-help "toolkits" giving innovators guidance on how to protect intellectual property in specific countries such as China, Korea and Mexico. For questions regarding patent enforcement issues, applicants may call the U.S. Government hotline at 1-866-999-HALT (1-866-999-4158).

LICENSE FOR FOREIGN FILING UNDER

Title 35, United States Code, Section 184

Title 37, Code of Federal Regulations, 5.11 & 5.15

GRANTED

The applicant has been granted a license under 35 U.S.C. 184, if the phrase "IF REQUIRED, FOREIGN FILING LICENSE GRANTED" followed by a date appears on this form. Such licenses are issued in all applications where the conditions for issuance of a license have been met, regardless of whether or not a license may be required as

set forth in 37 CFR 5.15. The scope and limitations of this license are set forth in 37 CFR 5.15(a) unless an earlier license has been issued under 37 CFR 5.15(b). The license is subject to revocation upon written notification. The date indicated is the effective date of the license, unless an earlier license of similar scope has been granted under 37 CFR 5.13 or 5.14.

This license is to be retained by the licensee and may be used at any time on or after the effective date thereof unless it is revoked. This license is automatically transferred to any related applications(s) filed under 37 CFR 1.53(d). This license is not retroactive.

The grant of a license does not in any way lessen the responsibility of a licensee for the security of the subject matter as imposed by any Government contract or the provisions of existing laws relating to espionage and the national security or the export of technical data. Licensees should apprise themselves of current regulations especially with respect to certain countries, of other agencies, particularly the Office of Defense Trade Controls, Department of State (with respect to Arms, Munitions and Implements of War (22 CFR 121-128)); the Bureau of Industry and Security, Department of Commerce (15 CFR parts 730-774); the Office of Foreign AssetsControl, Department of Treasury (31 CFR Parts 500+) and the Department of Energy.

NOT GRANTED

No license under 35 U.S.C. 184 has been granted at this time, if the phrase "IF REQUIRED, FOREIGN FILING LICENSE GRANTED" DOES NOT appear on this form. Applicant may still petition for a license under 37 CFR 5.12, if a license is desired before the expiration of 6 months from the filing date of the application. If 6 months has lapsed from the filing date of this application and the licensee has not received any indication of a secrecy order under 35 U.S.C. 181, the licensee may foreign file the application pursuant to 37 CFR 5.15(b).

SelectUSA

The United States represents the largest, most dynamic marketplace in the world and is an unparalleled location for business investment, innovation and commercialization of new technologies. The USA offers tremendous resources and advantages for those who invest and manufacture goods here. Through SelectUSA, our nation works to encourage, facilitate, and accelerate business investment. To learn more about why the USA is the best country in the world to develop technology, manufacture products, and grow your business, visit SelectUSA.gov.

UNITED STATES PATENT AND TRADEMARK OFFICE

UNITED STATES DEPARTMENT OF COMMERCE
United States Patent and Trademark Office
Address: COMMISSIONER FOR PATENTS
P.O. Box 1450
Alexandria, Virginia 22313-1450
www.uspto.gov

APPLICATION NUMBER	FILING OR 371(C) DATE	FIRST NAMED APPLICANT	ATTY. DOCKET NO./TITLE
13/310,755	12/04/2011	Magnus Goertz	NEONODE.P039

CONFIRMATION NO. 1066

75660
Soquel Group, LLC
P.O. Box 691
Soquel, CA 95073

IMPROPER CPOA LETTER

OC000000051539624

Date Mailed: 12/27/2011

NOTICE REGARDING POWER OF ATTORNEY

This is in response to the Power of Attorney filed 12/04/2011. The Power of Attorney in this application is not accepted for the reason(s) listed below:

- The Power of Attorney you provided did not comply with the new Power of Attorney rules that became effective on June 25, 2004. See 37 CFR 1.32.

/gkejela/

Office of Data Management, Application Assistance Unit (571) 272-4000, or (571) 272-4200, or 1-888-786-0101

Electronic Acknowledgement Receipt

EFS ID:	11537884
Application Number:	13310755
International Application Number:	
Confirmation Number:	1066
12/19/2011 MTEKLEMI 00000024 13310755 01 FC:1617 4800.00 DP 02 FC:1202 60.00 DP 03 FC:1622 190.00 DP **Title of Invention:**	USER INTERFACE
First Named Inventor/Applicant Name:	Magnus Goertz
Customer Number:	75660
Filer:	Marc Aron Berger
Filer Authorized By:	
Attorney Docket Number:	NEONODE.P039
Receipt Date:	04-DEC-2011
Filing Date:	
Time Stamp:	07:44:13
Application Type:	Utility under 35 USC 111(a)

Payment information:

Submitted with Payment	yes
Payment Type	Credit Card
Payment was successfully received in RAM	$6730
RAM confirmation Number	6951
Deposit Account	
Authorized User	

File Listing:

Document Number	Document Description	File Name	File Size(Bytes)/ Message Digest	Multi Part /.zip	Pages (if appl.)

Doc Code: TRACK1.REQ
Document Description: TrackOne Request

PTO/SB/424 (09-11)

CERTIFICATION AND REQUEST FOR PRIORITIZED EXAMINATION (TRACK I) (Page 1 of 1)

First Named Inventor:	Magnus Goertz	Nonprovisional Application Number (if known):	
Title of Invention:	USER INTERFACE		

APPLICANT HEREBY CERTIFIES THE FOLLOWING AND REQUESTS PRIORITIZED EXAMINATION (TRACK I) FOR THE ABOVE-IDENTIFIED APPLICATION.

1. (a) The application is an original nonprovisional utility application filed under 35 U.S.C. 111(a). This certification and request is being filed with the utility application via EFS-Web.

   OR

   (b) The application is an original nonprovisional plant application filed under 35 U.S.C. 111(a). This certification and request is being filed with the plant application in paper. (Note: Plant applications cannot be filed via EFS-Web.)

   Note: The following are excluded from the Track I program: design applications, provisional applications, national stage applications, PCT international applications, reissue applications, and reexamination proceedings.

2. The following fees (in amounts consistent with the current fee schedule available at http://www.uspto.gov/about/offices/cfo/finance/fees.jsp) are filed with the application: (1) basic filing fee; (2) search fee; (3) examination fee; (4) any required excess claims fees; (5) any required application size fee; (6) publication fee; (7) processing fee (Track I) set forth in 37 CFR 1.17(i); and (8) prioritized examination fee (Track I) set forth in 37 CFR 1.17(c).

3. An executed oath or declaration under 37 CFR 1.63 is filed with the application.

4. The application contains or is amended to contain no more than four independent claims and no more than thirty total claims, and no multiple dependent claims.

Signature /Marc A. Berger/	Date December 4, 2011
Name (Print/Typed) Marc A. Berger	Practitioner Registration Number 44029

Note: *Signatures of all the inventors or assignees of record of the entire interest or their representative(s) are required in accordance with 37 CFR 1.33 and 11.18. Please see 37 CFR 1.4(d) for the form of the signature. If necessary, submit multiple forms for more than one signature, see below*.*

☐ *Total of _____ forms are submitted.

Privacy Act Statement

The **Privacy Act of 1974 (P.L. 93-579)** requires that you be given certain information in connection with your submission of the attached form related to a patent application or patent. Accordingly, pursuant to the requirements of the Act, please be advised that: (1) the general authority for the collection of this information is 35 U.S.C. 2(b)(2); (2) furnishing of the information solicited is voluntary; and (3) the principal purpose for which the information is used by the U.S. Patent and Trademark Office is to process and/or examine your submission related to a patent application or patent. If you do not furnish the requested information, the U.S. Patent and Trademark Office may not be able to process and/or examine your submission, which may result in termination of proceedings or abandonment of the application or expiration of the patent.

The information provided by you in this form will be subject to the following routine uses:

1. The information on this form will be treated confidentially to the extent allowed under the Freedom of Information Act (5 U.S.C. 552) and the Privacy Act (5 U.S.C 552a). Records from this system of records may be disclosed to the Department of Justice to determine whether disclosure of these records is required by the Freedom of Information Act.
2. A record from this system of records may be disclosed, as a routine use, in the course of presenting evidence to a court, magistrate, or administrative tribunal, including disclosures to opposing counsel in the course of settlement negotiations.
3. A record in this system of records may be disclosed, as a routine use, to a Member of Congress submitting a request involving an individual, to whom the record pertains, when the individual has requested assistance from the Member with respect to the subject matter of the record.
4. A record in this system of records may be disclosed, as a routine use, to a contractor of the Agency having need for the information in order to perform a contract. Recipients of information shall be required to comply with the requirements of the Privacy Act of 1974, as amended, pursuant to 5 U.S.C. 552a(m).
5. A record related to an International Application filed under the Patent Cooperation Treaty in this system of records may be disclosed, as a routine use, to the International Bureau of the World Intellectual Property Organization, pursuant to the Patent Cooperation Treaty.
6. A record in this system of records may be disclosed, as a routine use, to another federal agency for purposes of National Security review (35 U.S.C. 181) and for review pursuant to the Atomic Energy Act (42 U.S.C. 218(c)).
7. A record from this system of records may be disclosed, as a routine use, to the Administrator, General Services, or his/her designee, during an inspection of records conducted by GSA as part of that agency's responsibility to recommend improvements in records management practices and programs, under authority of 44 U.S.C. 2904 and 2906. Such disclosure shall be made in accordance with the GSA regulations governing inspection of records for this purpose, and any other relevant (*i.e.*, GSA or Commerce) directive. Such disclosure shall not be used to make determinations about individuals.
8. A record from this system of records may be disclosed, as a routine use, to the public after either publication of the application pursuant to 35 U.S.C. 122(b) or issuance of a patent pursuant to 35 U.S.C. 151. Further, a record may be disclosed, subject to the limitations of 37 CFR 1.14, as a routine use, to the public if the record was filed in an application which became abandoned or in which the proceedings were terminated and which application is referenced by either a published application, an application open to public inspection or an issued patent.
9. A record from this system of records may be disclosed, as a routine use, to a Federal, State, or local law enforcement agency, if the USPTO becomes aware of a violation or potential violation of law or regulation.

PTO/SB/14 (11-08)
Approved for use through 01/31/2014. OMB 0651-0032
U.S. Patent and Trademark Office; U.S. DEPARTMENT OF COMMERCE
Under the Paperwork Reduction Act of 1995, no persons are required to respond to a collection of information unless it contains a valid OMB control number.

Application Data Sheet 37 CFR 1.76	Attorney Docket Number	NEONODE.P039
	Application Number	
Title of Invention	USER INTERFACE	

The application data sheet is part of the provisional or nonprovisional application for which it is being submitted. The following form contains the bibliographic data arranged in a format specified by the United States Patent and Trademark Office as outlined in 37 CFR 1.76.
This document may be completed electronically and submitted to the Office in electronic format using the Electronic Filing System (EFS) or the document may be printed and included in a paper filed application.

Secrecy Order 37 CFR 5.2

☐ Portions or all of the application associated with this Application Data Sheet may fall under a Secrecy Order pursuant to 37 CFR 5.2 (Paper filers only. Applications that fall under Secrecy Order may not be filed electronically.)

Applicant Information:

Applicant 1 Remove

Applicant Authority ◉ Inventor ○ Legal Representative under 35 U.S.C. 117 ○ Party of Interest under 35 U.S.C. 118

Prefix	Given Name	Middle Name	Family Name	Suffix
	Magnus		Goertz	

Residence Information (Select One) ○ US Residency ◉ Non US Residency ○ Active US Military Service

City	Lidingo	Country Of Residence[i]	SE
Citizenship under 37 CFR 1.41(b)[i]	CH		

Mailing Address of Applicant:

Address 1	Valhallav, 5		
Address 2			
City	Lidingo	State/Province	
Postal Code	181 32	Country[i]	SE

All Inventors Must Be Listed - Additional Inventor Information blocks may be generated within this form by selecting the **Add** button. Add

Correspondence Information:

Enter either Customer Number or complete the Correspondence Information section below.
For further information see 37 CFR 1.33(a).

☐ **An Address is being provided for the correspondence Information of this application.**

Customer Number	75660		
Email Address	mberger@soquelgroup.com	Add Email	Remove Email

Application Information:

Title of the Invention	USER INTERFACE		
Attorney Docket Number	NEONODE.P039	Small Entity Status Claimed	☐
Application Type	Nonprovisional		
Subject Matter	Utility		
Suggested Class (if any)	345	Sub Class (if any)	175
Suggested Technology Center (if any)	2800		
Total Number of Drawing Sheets (if any)	4	Suggested Figure for Publication (if any)	2

PTO/SB/14 (11-08)
Approved for use through 01/31/2014. OMB 0651-0032
U.S. Patent and Trademark Office; U.S. DEPARTMENT OF COMMERCE
Under the Paperwork Reduction Act of 1995, no persons are required to respond to a collection of information unless it contains a valid OMB control number.

Application Data Sheet 37 CFR 1.76	Attorney Docket Number	NEONODE.P039
	Application Number	
Title of Invention	USER INTERFACE	

Publication Information:

☐	Request Early Publication (Fee required at time of Request 37 CFR 1.219)
☐	**Request Not to Publish.** I hereby request that the attached application not be published under 35 U.S. C. 122(b) and certify that the invention disclosed in the attached application **has not and will not** be the subject of an application filed in another country, or under a multilateral international agreement, that requires publication at eighteen months after filing.

Representative Information:

Representative information should be provided for all practitioners having a power of attorney in the application. Providing this information in the Application Data Sheet does not constitute a power of attorney in the application (see 37 CFR 1.32).
Enter either Customer Number or complete the Representative Name section below. If both sections are completed the Customer Number will be used for the Representative Information during processing.

Please Select One:	◉ Customer Number	○ US Patent Practitioner	○ Limited Recognition (37 CFR 11.9)
Customer Number	75660		

Domestic Benefit/National Stage Information:

This section allows for the applicant to either claim benefit under 35 U.S.C. 119(e), 120, 121, or 365(c) or indicate National Stage entry from a PCT application. Providing this information in the application data sheet constitutes the specific reference required by 35 U.S.C. 119(e) or 120, and 37 CFR 1.78(a)(2) or CFR 1.78(a)(4), and need not otherwise be made part of the specification.

Prior Application Status	Pending		Remove
Application Number	Continuity Type	Prior Application Number	Filing Date (YYYY-MM-DD)
	Continuation of	10315250	2002-12-10

Additional Domestic Benefit/National Stage Data may be generated within this form by selecting the **Add** button. Add

Foreign Priority Information:

This section allows for the applicant to claim benefit of foreign priority and to identify any prior foreign application for which priority is not claimed. Providing this information in the application data sheet constitutes the claim for priority as required by 35 U.S.C. 119(b) and 37 CFR 1.55(a).

Remove

Application Number	Country [i]	Parent Filing Date (YYYY-MM-DD)	Priority Claimed
			○ Yes ○ No

Additional Foreign Priority Data may be generated within this form by selecting the **Add** button. Add

Assignee Information:

Providing this information in the application data sheet does not substitute for compliance with any requirement of part 3 of Title 37 of the CFR to have an assignment recorded in the Office.

Assignee 1 Remove

PTO/SB/14 (11-08)
Approved for use through 01/31/2014. OMB 0651-0032
U.S. Patent and Trademark Office; U.S. DEPARTMENT OF COMMERCE
Under the Paperwork Reduction Act of 1995, no persons are required to respond to a collection of information unless it contains a valid OMB control number.

Application Data Sheet 37 CFR 1.76	Attorney Docket Number	NEONODE.P039
	Application Number	
Title of Invention	USER INTERFACE	

If the Assignee is an Organization check here. ☒			
Organization Name	Neonode, Inc.		
Mailing Address Information:			
Address 1	2700 Augustine Drive		
Address 2	Suite 100		
City	Santa Clara	**State/Province**	CA
Country [i]	US	Postal Code	95054
Phone Number		Fax Number	
Email Address	yossi.shain@neonode.com		
Additional Assignee Data may be generated within this form by selecting the **Add** button.		Add	

Signature:

A signature of the applicant or representative is required in accordance with 37 CFR 1.33 and 10.18. Please see 37 CFR 1.4(d) for the form of the signature.					
Signature	/Marc A. Berger/			Date (YYYY-MM-DD)	2011-12-04
First Name	Marc	Last Name	Berger	Registration Number	44029

This collection of information is required by 37 CFR 1.76. The information is required to obtain or retain a benefit by the public which is to file (and by the USPTO to process) an application. Confidentiality is governed by 35 U.S.C. 122 and 37 CFR 1.14. This collection is estimated to take 23 minutes to complete, including gathering, preparing, and submitting the completed application data sheet form to the USPTO. Time will vary depending upon the individual case. Any comments on the amount of time you require to complete this form and/or suggestions for reducing this burden, should be sent to the Chief Information Officer, U.S. Patent and Trademark Office, U.S. Department of Commerce, P.O. Box 1450, Alexandria, VA 22313-1450. DO NOT SEND FEES OR COMPLETED FORMS TO THIS ADDRESS. **SEND TO: Commissioner for Patents, P.O. Box 1450, Alexandria, VA 22313-1450.**

Privacy Act Statement

The Privacy Act of 1974 (P.L. 93-579) requires that you be given certain information in connection with your submission of the attached form related to a patent application or patent. Accordingly, pursuant to the requirements of the Act, please be advised that: (1) the general authority for the collection of this information is 35 U.S.C. 2(b)(2); (2) furnishing of the information solicited is voluntary; and (3) the principal purpose for which the information is used by the U.S. Patent and Trademark Office is to process and/or examine your submission related to a patent application or patent. If you do not furnish the requested information, the U.S. Patent and Trademark Office may not be able to process and/or examine your submission, which may result in termination of proceedings or abandonment of the application or expiration of the patent.

The information provided by you in this form will be subject to the following routine uses:

1. The information on this form will be treated confidentially to the extent allowed under the Freedom of Information Act (5 U.S.C. 552) and the Privacy Act (5 U.S.C. 552a). Records from this system of records may be disclosed to the Department of Justice to determine whether the Freedom of Information Act requires disclosure of these records.

2. A record from this system of records may be disclosed, as a routine use, in the course of presenting evidence to a court, magistrate, or administrative tribunal, including disclosures to opposing counsel in the course of settlement negotiations.

3. A record in this system of records may be disclosed, as a routine use, to a Member of Congress submitting a request involving an individual, to whom the record pertains, when the individual has requested assistance from the Member with respect to the subject matter of the record.

4. A record in this system of records may be disclosed, as a routine use, to a contractor of the Agency having need for the information in order to perform a contract. Recipients of information shall be required to comply with the requirements of the Privacy Act of 1974, as amended, pursuant to 5 U.S.C. 552a(m).

5. A record related to an International Application filed under the Patent Cooperation Treaty in this system of records may be disclosed, as a routine use, to the International Bureau of the World Intellectual Property Organization, pursuant to the Patent Cooperation Treaty.

6. A record in this system of records may be disclosed, as a routine use, to another federal agency for purposes of National Security review (35 U.S.C. 181) and for review pursuant to the Atomic Energy Act (42 U.S.C. 218(c)).

7. A record from this system of records may be disclosed, as a routine use, to the Administrator, General Services, or his/her designee, during an inspection of records conducted by GSA as part of that agency's responsibility to recommend improvements in records management practices and programs, under authority of 44 U.S.C. 2904 and 2906. Such disclosure shall be made in accordance with the GSA regulations governing inspection of records for this purpose, and any other relevant (i.e., GSA or Commerce) directive. Such disclosure shall not be used to make determinations about individuals.

8. A record from this system of records may be disclosed, as a routine use, to the public after either publication of the application pursuant to 35 U.S.C. 122(b) or issuance of a patent pursuant to 35 U.S.C. 151. Further, a record may be disclosed, subject to the limitations of 37 CFR 1.14, as a routine use, to the public if the record was filed in an application which became abandoned or in which the proceedings were terminated and which application is referenced by either a published application, an application open to public inspections or an issued patent.

9. A record from this system of records may be disclosed, as a routine use, to a Federal, State, or local law enforcement agency, if the USPTO becomes aware of a violation or potential violation of law or regulation.

#3

OIPE JC104 MAR 1 0 2003 PATENT & TRADEMARK OFFICE

3682-32
P02-700/UK/MLE

Nixon & Vanderhye P.C. (10/99)
(Domestic Non-Assigned/Foreign) Page 1

RULE 63 (37 C.F.R. 1.63)
INVENTORS DECLARATION FOR PATENT APPLICATION
IN THE UNITED STATES PATENT AND TRADEMARK OFFICE

As a below named inventor, I hereby declare that my residence, mailing address and citizenship are as stated below next to my name, and I believe I am the original, first and sole inventor (if only one name is listed below) or an original, first and joint inventor (if plural names are listed below) of the subject matter which is claimed and for which a patent is sought on the invention entitled:

USER INTERFACE

the specification of which (check applicable box(s)):

[ ] is attached hereto
[X] was filed on December 10, 2002 as U.S. Application Serial No. Unassigned (Atty. Dkt. No. 3682-32)
[ ] was filed as PCT International application No. on
and (if applicable to U.S. or PCT application) was amended on

I hereby state that I have reviewed and understand the contents of the above identified specification, including the claims, as amended by any amendment referred to above. I acknowledge the duty to disclose to the Patent Office all information known to me to be material to patentability as defined in 37 C.F.R. 1.56. I hereby claim foreign priority benefits under 35 U.S.C. 119/365 of any foreign application(s) for patent or inventor's certificate listed below and have also identified below any foreign application for patent or inventor's certificate having a filing date before that of the application on which priority is claimed or, if no priority is claimed, before the filing date of this application:

Priority Foreign Application(s):

Application Number	Country	Day/Month/Year Filed

I hereby claim the benefit under 35 U.S.C. §119(e) of any United States provisional application(s) listed below.

Application Number	Date/Month/Year Filed

I hereby claim the benefit under 35 U.S.C. 120/365 of all prior United States and PCT international applications listed above or below:

Prior U.S./PCT Application(s): Application Serial No.	Day/Month/Year Filed	Status: patented pending, abandoned

I hereby declare that all statements made herein of my own knowledge are true and that all statements made on information and belief are believed to be true; and further that these statements were made with the knowledge that willful false statements and the like so made are punishable by fine or imprisonment, or both, under Section 1001 of Title 18 of the United States Code and that such willful false statements may jeopardize the validity of the application or any patent issued thereon. And on behalf of the owner(s) hereof, I hereby appoint **NIXON & VANDERHYE P.C., 1100 North Glebe Rd., 8th Floor, Arlington, VA 22201-4714, telephone number (703) 816-4000 (to whom all communications are to be directed)**, and the following attorneys thereof (of the same address) individually and collectively owner's/owners' attorneys to prosecute this application and to transact all business in the Patent and Trademark Office connected therewith and with the resulting patent: Larry S. Nixon, 25640; Arthur R. Crawford, 25327; James T. Hosmer, 30184; Robert W. Faris, 31352; Richard G. Besha, 22770; Mark E. Nusbaum, 32348; Michael J. Keenan, 32106; Bryan H. Davidson, 30251; Stanley C. Spooner, 27393; Leonard C. Mitchard, 29009; Duane M. Byers, 33363; Jeffry H. Nelson, 30481; John R. Lastova, 33149; H. Warren Burnam, Jr. 29366; Mary J. Wilson, 32955; J. Scott Davidson, 33489; Alan M. Kagen, 36178; Robert A. Molan, 29834; B. J. Sadoff, 36663; James D. Berquist, 34776; Updeep S. Gill, 37334; Michael J. Shea, 34725; Donald L. Jackson, 41090; Michelle N. Lester, 32331; Frank P. Presta, 19828; Joseph S. Presta, 35329; Joseph A. Rhoa, 37515; Raymond Y. Mah, 41426; Chris Comuntzis, 31097; Gary R. Tanigawa, 43180. I also authorize Nixon & Vanderhye to delete any attorney names/numbers no longer with the firm and to act and rely solely on instructions directly communicated from the person, assignee, attorney, firm, or other organization sending instructions to Nixon & Vanderhye on behalf of the owner(s).

1. Inventor's Signature: [signature] Date: 2003-03-05
Inventor: Magnus (first) MI GOERTZ (last) Swedish (citizenship)
Residence: (city) Stockholm (state/country) SWEDEN
Mailing Address: Engelbrektsgatan 14A, Stockholm, SWEDEN
(Zip Code) SE-114 32

2. Inventor's Signature: Date:
Inventor: (first) MI (last) (citizenship)
Residence: (city) (state/country)
Mailing Address:
(Zip Code)

[ ] *See attached sheet(s) for additional inventor(s) information!!*

USER INTERFACE

Technical field

The present invention relates to a user interface for a mobile handheld computer unit, which computer unit comprises a touch sensitive area, and which touch sensitive area is divided into a menu area and a display area.

The computer unit is adapted to run several applications simultaneously and to present any active application on top of any other application on the display area.

The present invention also relates to an enclosure for a handheld computer unit.

The present invention also relates to a computer readable medium. A computer program product with computer program code is stored within the computer readable medium, which code, when read by a computer, will make it possible for this computer to present a user interface according to the invention.

Description of background art

Mobile handheld computers are known in various embodiments. One kind of handheld computer is the personal digital assistant (PDA), which is getting more and more powerful.

Another kind of handheld computer unit is the mobile phone, which also is getting more and more powerful. There are also examples of where the mobile phone and the PDA are merging into one unit.

A third kind of handheld computer is the laptop computer, which is getting smaller and smaller, even competing in size with the PDA's.

The need to manage more information has led the development towards new solutions regarding user interfaces and navigation. The PDA's and mobile phones are getting larger and larger in order to provide a user-friendly interface.

Since the users have gotten used to small handheld units, it is hard to move towards larger units. This has led to foldable keyboards, different kinds if joy sticks and different kinds of touch sensitive displays and pads intended to help in providing a user interface that is suitable for small handheld compute units.

Summary of the present invention

Technical problems

It is a problem to provide a user-friendly interface that is adapted to handle large amount of information and different kinds of traditional computer-related applications on a small handheld computer unit.

It is a problem to provide a user interface that is simple to use, even for inexperienced users of computers or handheld devices.

It is a problem to provide a small handheld computer unit with an easily accessible text input function.

It is also a problem to provide a simple way to make the most commonly used functions for navigation and management available in the environment of a small handheld computer unit.

Solution

Taking these problems into consideration, and with the staring point from a user interface for a mobile handheld computer unit, which computer unit comprises a touch sensitive area, which touch sensitive area is divided into a menu area and a display area, which computer unit is adapted to run several applications simultaneously and to present an active application on top of any other application on the display area, the present invention teaches that the menu area is adapted to present a representation of a first, a second and a third predefined function, where the first function is a general application dependent function, the second function is a keyboard function, and the third function is a task and file manager. The present invention also teaches that any one of these three functions can be activated when the touch sensitive area detects a movement of an object with its starting point within the representation of the function on the menu area and with a direction from the menu area to the display area.

With the purpose of providing a simple way of managing any application or the operations system, the present invention teaches that if the first function is activated, the display area is adapted to display icons representing services or settings, depending on the current active application. One of the icons always represents a "help"-service, regardless of application. The icons are adapted to represent services or settings of the operations system of said computer unit, such

as background picture, clock, users, help, etc. if no application is currently active on the computer unit.

Selections of preferred service or setting is done by tapping on corresponding icon.

With the purpose of providing the access to a text input function in any application in the computer unit, the present invention teaches that when the second function is activated, the display area is adapted to display a keyboard and a text field,

If a text passage in an active application is highlighted, then this text passage is displayed in the text field for editing through the keyboard and that the highlighted text passage is replaced by the edited text passage when the second function is deactivated.

If no text passage in an active application is highlighted, then the text field is available for inputting and editing of text through the keyboard.

In the case of the latter the first function can be activated, or the second function can be closed, in which a choice of saving or deleting the inputted text is given. The choice of saving the inputted text results in an activation of the first function. In this case the first function will present services or settings available for the inputted text, such as saving the inputted text for later use, using the inputted text as telephone number in a telephone application, or sending the inputted text as message in communications application.

In order to provide a task and file management in a user interface for a handheld mobile computer, the present invention teaches that, if the third function is activated, the display area is adapted to display a list with a library of available applications and files on the computer unit A selection of an application will start the application, and a selection of a file will open the file in an application intended for the file.

A selection of an application or a file is done by moving the object so that the representation of desired application or file is highlighted, removing the object from the touch sensitive area, and then tapping on the touch sensitive area.

According to the present invention a navigation in the list is performed by moving the object in a direction towards the top of the list or towards the bottom of the list. This will cause the marking to move in the same direction. The speed of

the movement of the marking is lower than the speed of the movement of the object, with the purpose of making the navigation easier.

The user interface of the present invention is specifically adapted to be used with a small computer unit where the size of the touch sensitive area is in the order of 2-3 inches, The user interface is also adapted to be operated by one hand, where the object can be a finger, such as the thumb, of a user of the computer unit.

Advantages

Those advantages that can be primarily associated with a user interface or a computer readable medium according to the present invention reside in the ability to establish a user-friendly interface for small handheld computers, both regarding general application set-up functions, text input functions, and file and task management.

Brief description of the drawings

The present invention will now be described in more detail with reference to the accompanying drawings, in which

Figure 1 is a schematic and highly simplified view of a touch sensitive area on a mobile handheld computer unit;

Figure 2 is a schematic side view illustrating the activation of a function;

Figure 3 is a schematic illustration of a first function;

Figure 4 is a schematic side view illustrating the selection of a service or setting represented by an icon;

Figure 5 is a schematic illustration of a second function;

Figure 6 is a schematic side view illustrating the selection of a third function;

Figure 7 is a schematic illustration of an application or file;

Figure 8 is a schematic illustration on how navigation is performed;

Figure 9 is a schematic illustration of how the content of the display are is changed;

Figure 10 is a schematic side view further illustrating how navigation is performed;

Figure 11 is a schematic illustration of moving forwards in an application;

Figure 12 is a schematic illustration of moving backwards in, or closing, an application;

Figure 13 is a schematic illustration of an enclosure

Description of embodiments at present preferred

Figure 1 illustrates a user interface for a mobile handheld computer unit. The user interface according to the present invention is specifically adapted to computer units comprising a touch sensitive area 1, which is divided into a menu area 2 and a display area 3. It should be understood that there are several different kinds of known touch sensitive displays and that the present invention does not depend on what kind of touch sensitive display that is used in relation to the inventive user interface.

The computer unit is adapted to run several applications simultaneously and to present an active application on top of any other application on the display area 3. It should be understood that by simultaneously it is meant any technology that will make it appear to a user of the computer unit that applications are run simultaneously and that the present invention does not depend on how this is realised, whether it is through time-sharing of one processor, parallel use of several processors, or any other technique.

According to the present invention the menu area 2 is adapted to present a representation of a first 21, a second 22 and a third 23 predefined function.

The first function 21 is a general application dependent function, the second function 22 is a keyboard function, and the third function 23 is a task and file manager.

Figure 2 shows that any one of these three functions 21, 22, 23 can be activated when the touch sensitive area 1 detects a movement of an object 4 with its starting point A within the representation of a function on the menu area 2 and with a direction B from the menu area 2 to the display area 3.

Figure 3 shows that if the first function 21 is activated, then the display area 3 is adapted to display icons 211, 212, 213, 214, 215, 216 representing services or functions depending on the current active application. One of the icons, in the figure exemplified by icon 211, always represents a "help"-service, regardless of application. Any key that, because of lack of space on the display area, or because the key should be hidden from the active application, or because

of any other reason is not shown on the display area of an active application, can be represented by one of the icons 212, 213, 214, 215, 216 that is shown when the first function 21 is activated.

If for instance the active application handles a picture, then the icons that are shown when the first function is activated can be services such as "save to disk", "send as SMS", or "delete" and they can be settings such as "resolution", "colour", or "brightness".

If no application is currently active on the computer unit, then the icons 211, 212, 213, 214, 215, 216 are adapted to represent services or settings of the operations system of the computer unit, such as background picture, clock, alarm 215, users 213, help 211, etc.

Figure 4 shows that selection of a preferred service or setting is done by tapping C, D on corresponding icon 213.

Figure 5 shows that if the second function 22 is activated, then the display area 3 is adapted to display a keyboard 221 and a text field 222.

Two different scenarios can be at hand when this function key is activated. A first scenario can be that a text passage in the active application is highlighted as the second function is activated. If this is the case then the highlighted text passage is displayed in the text field 222 for editing through the keyboard 221.

The highlighted text passage is replaced by the edited text passage when the second function 21 is deactivated.

A second scenario can be that no text passage in the active application is highlighted. If this is the case then the text field 222 is available for inputting and editing of text through the keyboard 221.

In the case of the latter scenario, the first function 21 can be activated, or the second function 22 can be closed. If the second function 22 is closed then a choice of saving or deleting the inputted text is given, where the choice of saving the inputted text results in an activation of the first function 21.

As the first function 21 is activated with the second function 22 as currently active application the first function 21 will present services or settings available for the inputted text, such as saving the inputted text for later use, using the inputted text as telephone number in a telephone application, or sending the inputted text as message in communications application, such as e-mail, SMS, or fax.

[redacted]

Figure 6 shows that if the third function 23 is activated, then the display area 3 is adapted to display a list 231 with a library of available applications and files on the computer unit.

A selection of an application will start the application, and a selection of a file will open the file in an application intended for the file. The name of a selected file can be edited by activation of the second function 22 as the file is highlighted.

Figure 7 shows that a selection of an application or a file is done by moving E the object 4 so that the representation of desired application or file is highlighted, removing F the object 4 from the touch sensitive area 1, and then tapping G, H on the touch sensitive area 1.

An application or file is highlighted by placing some kind of marking 232 on the representation of the application or file. This marking can be done in different ways, for example by putting a frame around the representation of the application or file, as shown in the figure, or by inverting the representation of the application or file.

It should b understood that all lists in the computer unit, such as a list of contact information in an address book, a list of e-mail messages in a mailbox, or a telephone log, can be managed in the above described manner.

The list 231 can be adapted to present only files or only applications. In this case, the top area of the list 231 can present a field 233 through which the content if the list 231 can be altered. If the list only presents files, then the field 233 can display a representation of a task manager and a selection of the field 233 will cause the list 231 to alter to present only applications, and if the list 231 only presents applications, then the field 233 displays a representation of a file manager and a selection of the field 233 will cause the list 231 to alter and present only files.

Figure 8 shows that navigation in the list is performed by moving the object 4 in a direction I towards the top 231a of the list 231 or towards J the bottom 231b of the list 231. This movement I, J of the object 4 will cause the marking 232 to move K, L in the same direction. The speed of the movement K, L of the marking 232 is lower than the speed of the movement I, J of the object 4.

Figure 9 shows that if the number of applications and/or files in the list 231 exceeds the number of applications and/or files that can be presented on the display area 3, and if the object 4 is moved to the top or bottom position of the

display area, then lifted, replaced on the display area, and then again moved to the top or bottom of the display area, then the content of the display area will be replaced one whole page, meaning that if the object 4 is positioned N at the bottom 3b of the display area 3, then lifted, replaced on the display area 3, and then again moved M to the bottom 3b of the display area 3, then the content 31 of the display area 3 will be replaced P by the following applications and/or files 32 in the list 231. In the same way, but not shown in the figure, if the object is position at the top of the display area, then lifted, replaced on the display area 3, and then again moved to the top of the display area, the content of the display area will be replaced by the preceding applications and/or files in the list.

Figure 10 shows that if the object 4 is removed Q from a first position 33 on the display area 3 and then replaced R, S on a second position 34 on the display area 3, then the navigation can be continued T from the second position 34.

Figure 11 shows that moving U the object 4 from the left of the display area 3 to the right of the display area 3 moves the active application, function, service or setting on one step forwards. Figure 12 shows that, in a similar manner, the active application, function, service or setting is closed or backed one step by moving V the object 4 from the right of the display area 3 to the left of the display area 3.

As shown in figure 1, the menu area 2 is positioned at the bottom of the touch sensitive area 1. The representation of the first function 21 is positioned at the left side of the menu area 2, the representation of the second function 22 is positioned at the middle of the menu area 2, and the representation of the third function 23 is positioned at the right side of the menu area 2.

As shown in figure 13, the present invention relates to a user interface for a hand held mobile unit that preferably can be manageable with one hand. Hence the present invention teaches that the user interface is adapted to a touch sensitive area 1 with a size that is in the order of 2-3 inches, meaning the diagonal distance W between two corners of the touch sensitive area 1.

The user interface is adapted to be operated by one hand, where the object 4 can be a finger, such as the thumb shown in the figures, of a user of the computer unit. It should be understood though that the present invention might also be used with another object, such as a pen or other pointing device.

According to one preferred embodiment of the present invention the computer unit is covered with an enclosure 5, which is provided with an opening 51 for the display area 3, and where the representations of the menu area 2 is printed on top of the enclosure 5. It should be understood that the opening 51 might be a transparent part of the enclosure 5 or that it might be an open aperture depending on among other things technical considerations pertaining to the touch sensitive area 1.

This makes it possible to allow the enclosure 5 to be removable and exchangeable.

Figure 14 shows a computer readable medium, in the figure schematically shown as a solid-state memory 61. A computer program product is stored within the computer readable medium. This computer program product comprises computer readable code 62, which, when read by a computer 6, will make it possible for the computer 6 to present a user interface according to the present invention.

The present invention also teaches that the computer program product is adapted to function as a shell upon an operations system.

It will be understood that the invention is not restricted to the aforedescribed and illustrated exemplifying embodiments thereof, and that these embodiments can be modified within the scope of the inventive concept illustrated in the accompanying Claims.

CLAIMS

1. User interface for a mobile handheld computer unit, where said computer unit comprises a touch sensitive area, which touch sensitive area is divided into a menu area and a display area, where said computer unit is adapted to run several applications simultaneously, and to present an active application on top of any other application on said display area, **characterised** in, that said menu area is adapted to present a representation of a first, a second and a third predefined function, that said first function is a general application dependent function, that said second function is a keyboard function, that said third function is a task and file manager, and that any one of said three functions can be activated when said touch sensitive area detects a movement of an object with its starting point within the representation of said function on said menu area and with a direction from said menu area to said display area.

2. User interface according to Claim 1, **characterised** in, that, if said first function is activated, said display area is adapted to display icons representing different services or settings depending on the current active application, that one of said icons always represents a "help"-service, regardless of application, and that, if no application is currently active on said computer unit, said icons are adapted to represent services or settings of the operations system of said computer unit, such as background picture, clock, users, help, etc.

3. User interface according to Claim 2, **characterised** in, that that a selection of a preferred service or setting is done tapping on corresponding icon.

4. User interface according to Claim 1, **characterised** in, that, if said second function is activated, said display area is adapted to display a keyboard and a text field,

- that, if a text passage in said active application is highlighted, said text passage is displayed in said text field for editing through said keyboard and that said highlighted text passage is replaced by said edited text passage when said second function is deactivated, and

- that, if no text passage in said active application is highlighted, said text field is available for inputting and editing of text through said keyboard.

5. User interface according to Claim 4, **characterised** in, that if no text passage in said active application is highlighted, and said text field is used for inputting and editing of text through said keyboard, then

- said first function can be activated, or
- said second function can be closed, in which a choice of saving or deleting said inputted text is given, where the choice of saving said inputted text results in an activation of said first function,

in which said first function will present services or settings available for said inputted text, such as saving said inputted text for later use, using said inputted text as telephone number in a telephone application, or sending said inputted text as message in communications application.

6. User interface according to Claim 1, **characterised** in, that, if said third function is activated, said display area is adapted to display a list with a library of available applications and files on said computer unit, that a selection of an application will start said application, and that a selection of a file will open said file in an application intended for said file.

7. User interface according to Claim 6, **characterised** in, that a selection of an application or a file is done by moving said object so that the representation of desired application or file is highlighted, removing said object from said touch sensitive area, and then tapping on said touch sensitive area, and that an application or file is highlighted by placing some kind of marking on the representation of said application or file, such as positioning a frame around the representation of said application or file or inverting the representation of said application or file.

8. User interface according to Claim 7, **characterised** in, that said list is adapted to present only said files or only said applications, that the top area of said list presents a field through which the content if said list can be altered, that, if said list only presents files, said field displays a representation of a task manager

and a selection of said field will cause said list to alter to present only applications, and that, if said list only presents applications, said field displays a representation of a file manager and a selection of said field will cause said list to alter and present only files.

9. User interface according to Claim 7 or 8, **characterised** in, that, a navigation in said list is performed by moving said object in a direction towards the top of said list or towards the bottom of said list, that the movement of said object will cause said marking to move in the same direction, and that the speed of the movement of said marking is lower than the speed of the movement of said object.

10. User interface according to Claim 9, **characterised** in, that, if the number of applications and/or files in said list exceeds the number of applications and files that can be presented on said display area, and if said object is moved to the top or bottom position of said display area, then lifted, replaced on said display area, and again moved to the top or bottom of said display area, the content of said display area will be replaced one whole page, meaning that if said object is position at the bottom of said display area, then lifted, replaced on said display area, and then again moved to the bottom of said display area, the content of said display area will be replaced by the following applications and/or files in said list, and if said object is position at the top of said display area, then lifted, replaced on said display area, and then again moved to the top of said display area, the content of said display area will be replaced by the preceding applications and/or files in said list.

11. User interface according to Claim 10, **characterised** in, that if said object is removed from a first position on said display area and then replaced on a second position on said display area, said navigation can be continued from said second position.

12. User interface according to any preceding Claim, **characterised** in, that an active application, function, service or setting is moved on one step by moving said object from the left of said display area to the right of said display area, and that the active application, function service or setting is closed or backed one step

[redacted]

by moving said object from the right of said display area to the left of said display area.

13. User interface according to any preceding Claim, **characterised** in, that said menu area is positioned at the bottom of said touch sensitive area, that said representation of said first function is positioned at the left side of said menu area, that said representation of said second function is positioned at the middle of said menu area, and that said representation of said third function is positioned at the right side of said menu area.

14. User interface according to any preceding Claim, **characterised** in, that said user interface is adapted to a touch sensitive area with a size that is in the order of 2-3 inches, and that said user interface is adapted to be operated by one hand, where said object can be a finger, such as the thumb, of a user of said computer unit.

15. An enclosure adapted to cover a computer unit, said computer unit being adapted to present a user interface according to any of Claims 1 to 14, **characterised** in, that said enclosure is provided with an opening for said display area, and that a representation of said menu area is printed on top of said enclosure.

16. Enclosure according to Claim 15, **characterised** in, that said enclosure is removable and exchangeable.

17. A computer readable medium, with a computer program product stored therein, **characterised** in, that said computer program product comprises computer readable code, which, when read by a computer, will make it possible for said computer to present a user interface according to any of Claims 1 to 14.

18. A computer readable medium according to Claim 17, **characterised** in, that said computer program product is adapted to function as a shell upon an operations system.

ABSTRACT

The present invention relates to a user interface for a mobile handheld computer unit, which computer unit comprises a touch sensitive area (1), which is divided into a menu area (2) and a display area (3). The computer unit is adapted to run several applications simultaneously and to present an active application on top of any other application on the display area (3). The menu area (2) is adapted to present a representation of a first (21), a second (22) and a third predefined (23) function. The first function (21) is a general application dependent function, the second function (22) is a keyboard function, and the third function (23) is a task and file manager. Any one of these three functions can be activated when the touch sensitive area (1) detects a movement of an object with its starting point within the representation of the function on the menu area (2) and with a direction from the menu area (2) to the display area (3).

(Fig. 1)

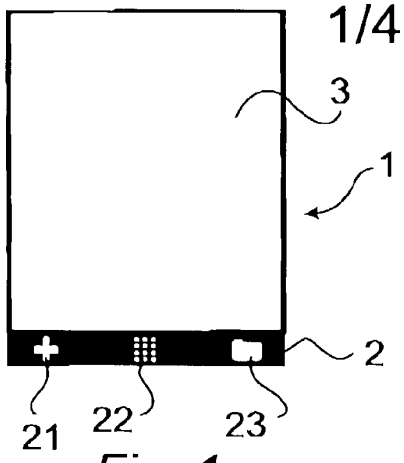

Fig. 1.

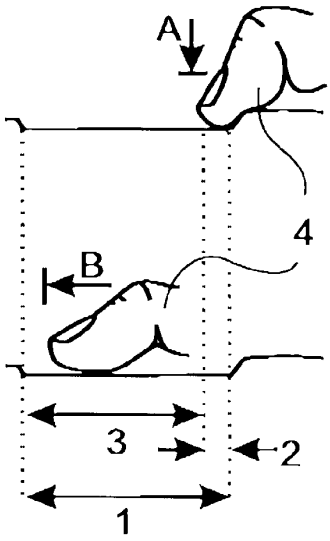

Fig. 2.

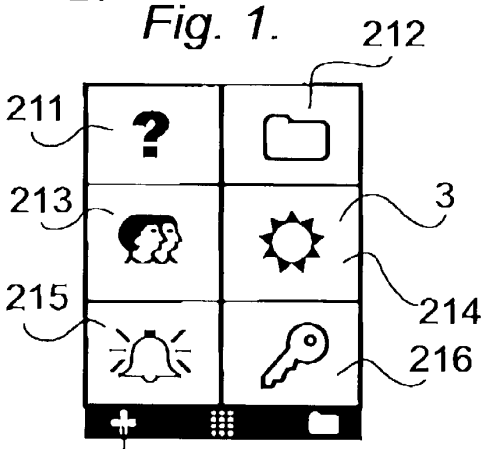

Fig. 3.

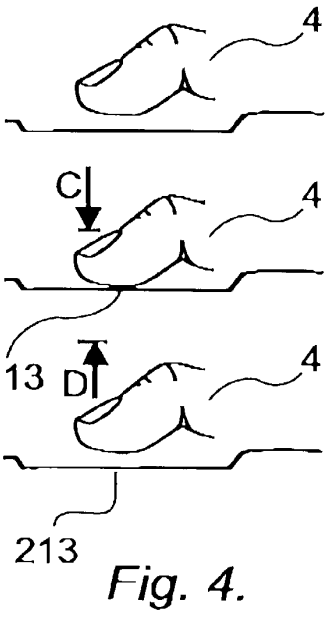

Fig. 4.

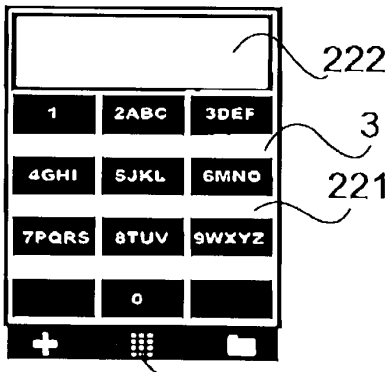

Fig. 5.

2/4

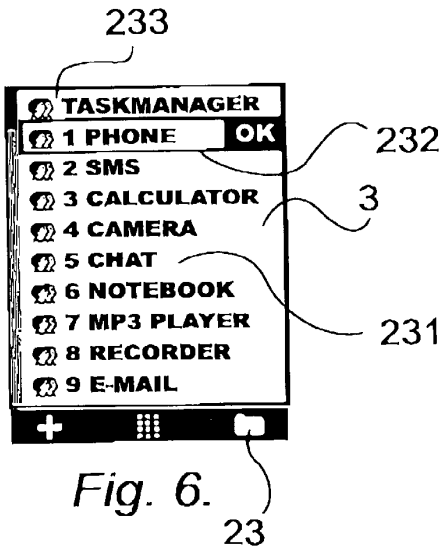

Fig. 6.

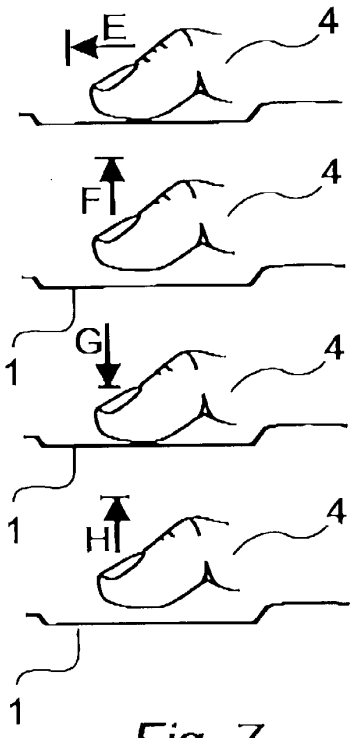

Fig. 7.

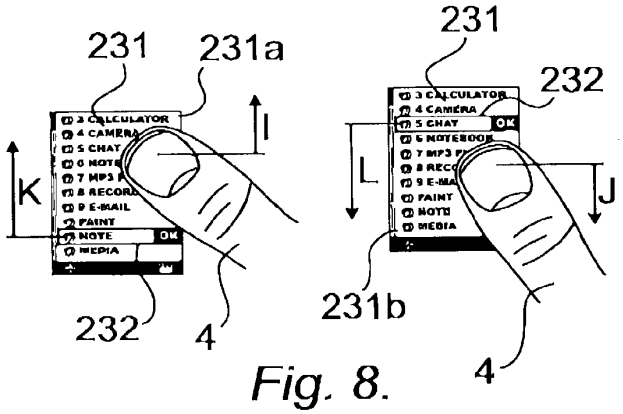

Fig. 8.

3/4

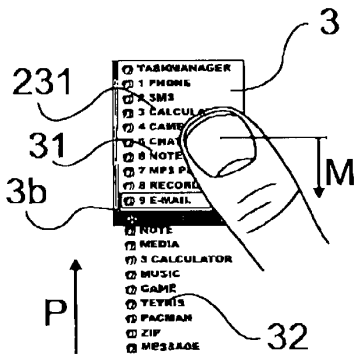

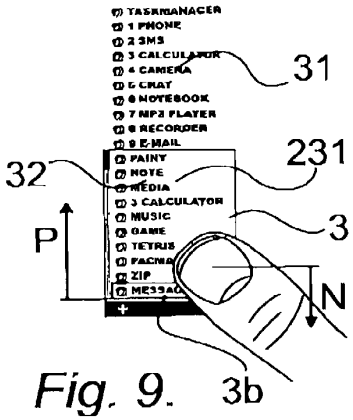

Fig. 9.

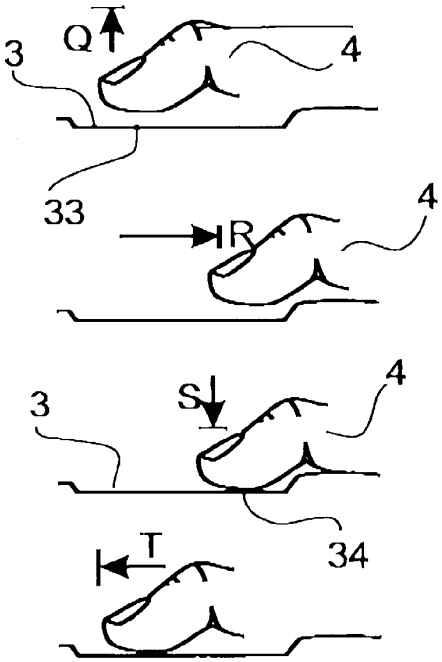

Fig. 10.

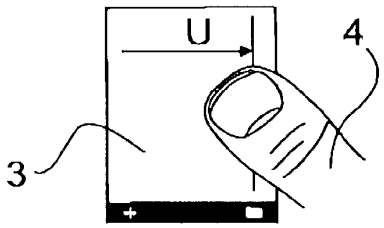

Fig. 11.

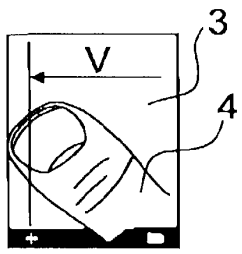

Fig. 12.

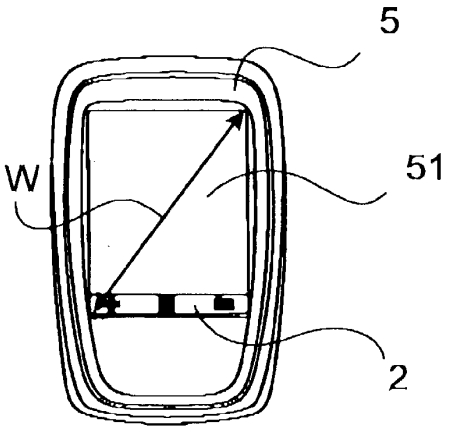

Fig. 13.

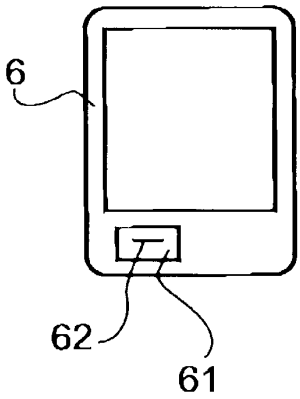

Fig. 14.

PTO/SB/08a (01-10)
Approved for use through 07/31/2012. OMB 0651-0031
U.S. Patent and Trademark Office; U.S. DEPARTMENT OF COMMERCE
Under the Paperwork Reduction Act of 1995, no persons are required to respond to a collection of information unless it contains a valid OMB control number.

INFORMATION DISCLOSURE STATEMENT BY APPLICANT (**Not for submission under 37 CFR 1.99)**		
	Application Number	
	Filing Date	
	First Named Inventor	Magnus Goertz
	Art Unit	
	Examiner Name	
	Attorney Docket Number	NEONODE.P039

U.S.PATENTS						Remove
Examiner Initial*	Cite No	Patent Number	Kind Code[1]	Issue Date	Name of Patentee or Applicant of cited Document	Pages,Columns,Lines where Relevant Passages or Relevant Figures Appear
	1	5053758	B1	1991-10-01	Cornett et al.	
	2	7159763	B2	2007-01-09	Yap et al.	
	3	7006077	B1	2006-02-28	Uusimaki	
	4	6597345	B2	2003-07-22	Hirshberg	
	5	6639584	B1	2003-10-28	Li	
	6	7225408	B2	2007-05-29	O'Rourke	
	7	6346935	B1	2002-02-12	Nakajima et al.	
	8	6085204	B1	2000-07-04	Chijiwa et al.	

INFORMATION DISCLOSURE STATEMENT BY APPLICANT (Not for submission under 37 CFR 1.99)		
	Application Number	
	Filing Date	
	First Named Inventor	Magnus Goertz
	Art Unit	
	Examiner Name	
	Attorney Docket Number	NEONODE.P039

	9	7286063	B2	2007-10-23	Gauthey et al.	
	10	5956030	B1	1999-09-21	Conrad et al.	
	11	5900875	B1	1999-05-04	Haitani et al.	
	12	6988246	B2	2006-01-17	Kopitzke et al.	
	13	6727917	B1	2004-04-27	Chew et al.	
	14	6734883	B1	2004-05-11	Wynn et al.	
	15	6052279	B1	2000-04-18	Friend et al.	
	16	6542191	B1	2003-04-01	Yonezawa	
	17	6833827	B2	2004-12-21	Lui et al.	
	18	5406307	B1	1995-04-11	Hirayama et al.	
	19	7030861	B1	2006-04-18	Westerman et al.	

INFORMATION DISCLOSURE STATEMENT BY APPLICANT (Not for submission under 37 CFR 1.99)		
	Application Number	
	Filing Date	
	First Named Inventor	Magnus Goertz
	Art Unit	
	Examiner Name	
	Attorney Docket Number	NEONODE.P039

	20	5603053	B1	1997-02-11	Gough et al.	
	21	7880724	B2	2011-02-01	Nguyen et al.	
	22	4790028	B1	1988-12-06	Ramage	
	23	5283558	B1	1994-02-01	Chan	
	24	5988645	B1	1999-11-23	Downing	
	25	5577733	B1	1996-11-26	Downing	
	26	4243879	B1	1981-01-06	Carroll et al.	
	27	5036187	B1	1991-07-30	Yoshida et al.	
	28	5194863	B1	1993-03-16	Barker et al.	
	29	5825352	B1	1998-10-20	Bisset et al.	
	30	4301447	B1	1981-11-17	Funk et al.	

INFORMATION DISCLOSURE STATEMENT BY APPLICANT (Not for submission under 37 CFR 1.99)		
	Application Number	
	Filing Date	
	First Named Inventor	Magnus Goertz
	Art Unit	
	Examiner Name	
	Attorney Docket Number	NEONODE.P039

If you wish to add additional U.S. Patent citation information please click the Add button. Add

U.S.PATENT APPLICATION PUBLICATIONS Remove

Examiner Initial*	Cite No	Publication Number	Kind Code[1]	Publication Date	Name of Patentee or Applicant of cited Document	Pages,Columns,Lines where Relevant Passages or Relevant Figures Appear
	1	20020027549	A1	2002-03-07	Hirshberg	
	2	20040021643	A1	2004-02-05	Hoshino et al.	
	3	20050035956	A1	2005-02-17	Sinclair et al.	
	4	20020171691	A1	2002-11-21	Currans et al.	
	5	20040100510	A1	2004-05-27	Milic-Frayling et al.	
	6	20020046353	A1	2002-04-18	Kishimoto	
	7	20020002326	A1	2002-01-03	Causey, III et al.	
	8	20010002694	A1	2001-06-07	Nakazawa et al.	
	9	20010022579	A1	2001-09-20	Hirabayashi	

INFORMATION DISCLOSURE STATEMENT BY APPLICANT (Not for submission under 37 CFR 1.99)		
	Application Number	
	Filing Date	
	First Named Inventor	Magnus Goertz
	Art Unit	
	Examiner Name	
	Attorney Docket Number	NEONODE.P039

	10	20010026268	A1	2001-10-04	Ito	
	11	20010028344	A1	2001-10-11	Iwamoto et al.	
	12	20010055006	A1	2001-12-27	Sano et al.	

If you wish to add additional U.S. Published Application citation information please click the Add button. Add

FOREIGN PATENT DOCUMENTS Remove

Examiner Initial*	Cite No	Foreign Document Number[3]	Country Code[2] ¡	Kind Code[4]	Publication Date	Name of Patentee or Applicant of cited Document	Pages,Columns,Lines where Relevant Passages or Relevant Figures Appear	T[5]
	1	0 330 767	EP	B1	1989-09-06	PIONEER ELECTRONIC CORPORATION		☐
	2	8600447	WO	A1	1986-01-16	AMP Inc.		☐
	3	8600446	WO	A1	1986-01-16	AMP Inc.		☐

If you wish to add additional Foreign Patent Document citation information please click the Add button Add

NON-PATENT LITERATURE DOCUMENTS Remove

Examiner Initials*	Cite No	Include name of the author (in CAPITAL LETTERS), title of the article (when appropriate), title of the item (book, magazine, journal, serial, symposium, catalog, etc), date, pages(s), volume-issue number(s), publisher, city and/or country where published.	T[5]
	1	CARLSON, JEFF, Visual Quickstart Guide Palm Organizers. Peachpit Press. 2000. Berkeley, CA. Pages xiii, 12, 25, 26, 28-30, 40, 47, 246 and 253.	☐

INFORMATION DISCLOSURE STATEMENT BY APPLICANT (Not for submission under 37 CFR 1.99)		
	Application Number	
	Filing Date	
	First Named Inventor	Magnus Goertz
	Art Unit	
	Examiner Name	
	Attorney Docket Number	NEONODE.P039

	2	STREITELMEIER, JULIE, "Palm m100." The Gadgeteer. 2000. <http://www.the-gadgeteer.com/review/palm_m100_review> pages 1-8.	☐
	3	VENOLIA ET AL., "T-Cube: A Fast, Self-Disclosing Pen-Based Alphabet." April 24, 1994. Pages 265-270.	☐
	4	DULBERG, ET AL., An Imprecise Mouse Gesture for the Fast Activation of Controls. Interact 1999. Pages 1-8.	☐
	5	POGUE, DAVID, Palm Pilot: The Ultimate Guide, 2nd Edition, 1998. O'Reilly and Associates, Inc. Pages 1-17.	☐

If you wish to add additional non-patent literature document citation information please click the Add button Add

EXAMINER SIGNATURE

Examiner Signature		Date Considered	

*EXAMINER: Initial if reference considered, whether or not citation is in conformance with MPEP 609. Draw line through a citation if not in conformance and not considered. Include copy of this form with next communication to applicant.

[1] See Kind Codes of USPTO Patent Documents at www.USPTO.GOV or MPEP 901.04. [2] Enter office that issued the document, by the two-letter code (WIPO Standard ST.3). [3] For Japanese patent documents, the indication of the year of the reign of the Emperor must precede the serial number of the patent document. [4] Kind of document by the appropriate symbols as indicated on the document under WIPO Standard ST.16 if possible. [5] Applicant is to place a check mark here if English language translation is attached.

INFORMATION DISCLOSURE STATEMENT BY APPLICANT (Not for submission under 37 CFR 1.99)		
	Application Number	
	Filing Date	
	First Named Inventor	Magnus Goertz
	Art Unit	
	Examiner Name	
	Attorney Docket Number	NEONODE.P039

CERTIFICATION STATEMENT

Please see 37 CFR 1.97 and 1.98 to make the appropriate selection(s):

☐ That each item of information contained in the information disclosure statement was first cited in any communication from a foreign patent office in a counterpart foreign application not more than three months prior to the filing of the information disclosure statement. See 37 CFR 1.97(e)(1).

OR

☐ That no item of information contained in the information disclosure statement was cited in a communication from a foreign patent office in a counterpart foreign application, and, to the knowledge of the person signing the certification after making reasonable inquiry, no item of information contained in the information disclosure statement was known to any individual designated in 37 CFR 1.56(c) more than three months prior to the filing of the information disclosure statement. See 37 CFR 1.97(e)(2).

☐ See attached certification statement.

☐ The fee set forth in 37 CFR 1.17 (p) has been submitted herewith.

☒ A certification statement is not submitted herewith.

SIGNATURE

A signature of the applicant or representative is required in accordance with CFR 1.33, 10.18. Please see CFR 1.4(d) for the form of the signature.

Signature	/Marc A. Berger/	Date (YYYY-MM-DD)	2011-12-04
Name/Print	Marc A. Berger	Registration Number	44029

This collection of information is required by 37 CFR 1.97 and 1.98. The information is required to obtain or retain a benefit by the public which is to file (and by the USPTO to process) an application. Confidentiality is governed by 35 U.S.C. 122 and 37 CFR 1.14. This collection is estimated to take 1 hour to complete, including gathering, preparing and submitting the completed application form to the USPTO. Time will vary depending upon the individual case. Any comments on the amount of time you require to complete this form and/or suggestions for reducing this burden, should be sent to the Chief Information Officer, U.S. Patent and Trademark Office, U.S. Department of Commerce, P.O. Box 1450, Alexandria, VA 22313-1450. DO NOT SEND FEES OR COMPLETED FORMS TO THIS ADDRESS. **SEND TO: Commissioner for Patents, P.O. Box 1450, Alexandria, VA 22313-1450.**

Privacy Act Statement

The Privacy Act of 1974 (P.L. 93-579) requires that you be given certain information in connection with your submission of the attached form related to a patent application or patent. Accordingly, pursuant to the requirements of the Act, please be advised that: (1) the general authority for the collection of this information is 35 U.S.C. 2(b)(2); (2) furnishing of the information solicited is voluntary; and (3) the principal purpose for which the information is used by the U.S. Patent and Trademark Office is to process and/or examine your submission related to a patent application or patent. If you do not furnish the requested information, the U.S. Patent and Trademark Office may not be able to process and/or examine your submission, which may result in termination of proceedings or abandonment of the application or expiration of the patent.

The information provided by you in this form will be subject to the following routine uses:

1. The information on this form will be treated confidentially to the extent allowed under the Freedom of Information Act (5 U.S.C. 552) and the Privacy Act (5 U.S.C. 552a). Records from this system of records may be disclosed to the Department of Justice to determine whether the Freedom of Information Act requires disclosure of these record s.

2. A record from this system of records may be disclosed, as a routine use, in the course of presenting evidence to a court, magistrate, or administrative tribunal, including disclosures to opposing counsel in the course of settlement negotiations.

3. A record in this system of records may be disclosed, as a routine use, to a Member of Congress submitting a request involving an individual, to whom the record pertains, when the individual has requested assistance from the Member with respect to the subject matter of the record.

4. A record in this system of records may be disclosed, as a routine use, to a contractor of the Agency having need for the information in order to perform a contract. Recipients of information shall be required to comply with the requirements of the Privacy Act of 1974, as amended, pursuant to 5 U.S.C. 552a(m).

5. A record related to an International Application filed under the Patent Cooperation Treaty in this system of records may be disclosed, as a routine use, to the International Bureau of the World Intellectual Property Organization, pursuant to the Patent Cooperation Treaty.

6. A record in this system of records may be disclosed, as a routine use, to another federal agency for purposes of National Security review (35 U.S.C. 181) and for review pursuant to the Atomic Energy Act (42 U.S.C. 218(c)).

7. A record from this system of records may be disclosed, as a routine use, to the Administrator, General Services, or his/her designee, during an inspection of records conducted by GSA as part of that agency's responsibility to recommend improvements in records management practices and programs, under authority of 44 U.S.C. 2904 and 2906. Such disclosure shall be made in accordance with the GSA regulations governing inspection of records for this purpose, and any other relevant (i.e., GSA or Commerce) directive. Such disclosure shall not be used to make determinations about individuals.

8. A record from this system of records may be disclosed, as a routine use, to the public after either publication of the application pursuant to 35 U.S.C. 122(b) or issuance of a patent pursuant to 35 U.S.C. 151. Further, a record may be disclosed, subject to the limitations of 37 CFR 1.14, as a routine use, to the public if the record was filed in an application which became abandoned or in which the proceedings were terminated and which application is referenced by either a published application, an application open to public inspections or an issued patent.

9. A record from this system of records may be disclosed, as a routine use, to a Federal, State, or local law enforcement agency, if the USPTO becomes aware of a violation or potential violation of law or regulation.

(19) Europäisches Patentamt
European Patent Office
Office européen des brevets

(11) Publication number: **0 330 767 A1**

(12) EUROPEAN PATENT APPLICATION

(21) Application number: **88301738.6**

(51) Int. Cl.4: **G06K 11/06**

(22) Date of filing: **29.02.88**

(43) Date of publication of application:
06.09.89 Bulletin 89/36

(84) Designated Contracting States:
DE FR GB

(71) Applicant: **PIONEER ELECTRONIC CORPORATION**
No. 4-1, Meguro 1-chome
Meguro-ku Tokyo 153(JP)

(72) Inventor: **Araki, Morio Pioneer Elec. Corp. Kawagoe Works**
No. 25-1, Aza Nishimachi Oaza Yamada
Kawagoe-shi Saitama(JP)
Inventor: **Mori, Shigeto Pioneer Elec. Corp. Kawagoe Works**
No. 25-1, Aza Nishimachi Oaza Yamada
Kawagoe-shi Saitama(JP)
Inventor: **Kaneko, Michihiro Pioneer Elec. Corp. Kawagoe Work**
No. 25-1, Aza Nishimachi Oaza Yamada
Kawagoe-shi Saitama(JP)
Inventor: **Go, Yasunao Pioneer Elec. Corp. Kawagoe Works**
No. 25-1, Aza Nishimachi Oaza Yamada
Kawagoe-shi Saitama(JP)

(74) Representative: **Brunner, Michael John et al**
GILL JENNINGS & EVERY 53-64 Chancery Lane
London WC2A 1HN(GB)

(54) Touch panel control device with touch time and finger direction discrimination.

(57) In a touch panel control device for providing control signals to select an operation made for an electronic device according to how the finger touches a touch panel (1), a timer (3) starts its operation from the time instant when the finger touches the touch panel, and the direction and distance of movement of the finger in a predetermined period of time are detected, to control the operation of the electronic device or the like.

EP 0 330 767 A1

FIG. 3

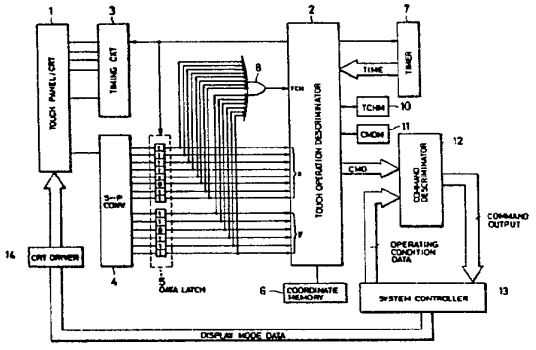

TOUCH PANEL CONTROL DEVICE WITH TOUCH TIME AND FINGER DIRECTION DISCRIMINATION

The invention relates to a touch panel control device for acoustic equipment.

Acoustic entertainment devices for vehicles, such as a cassette tape player, compact disk player and radio tuner are installed in a considerably small space such as an in-dash console, and therefore must be small in size. Accordingly, the switches or push-buttons of the acoustic devices must also be small. These small switches or push-buttons are difficult to operate. Furthermore, the acoustic devices are used in different modes and operated in various manners. Therefore they employ a variety of switches, push-buttons, etc. Since the operator cannot easily locate them while driving, his attention to the road may be distracted when operating the acoustic devices causing a dangerous condition.

In this connection, a method has been disclosed in Japanese Patent Application (OPI) No. 89720/1986 (the term "OPI" as used herein means an "unexamined published application") in which instead of switches or push-buttons for operating acoustic devices, there is provided a touch panel, the different controls of the devices being effected by touching different positions on the touch panel.

The conventional touch panel method will be described with reference to Fig. 1. A touch panel 80 having interior detecting electrodes is scanned with a scanner 20 to detect when and at what point the touch panel 80 has been touched. The detection output data of the scanner 20 are applied to a first memory 30, where the detection output data of a scan are temporarily stored. The detection output data of one scan read out of the the first memory 30 are supplied to a recognizing block 40. A touch on the touch panel is pattern-recognized by the recognizing block 40 for each scan of the scanner 20.

The output pattern data of the recognizing block 40 are applied to a second memory 50 and a data comparator 60. The second memory 50 temporarily stores the recognized pattern data produced during one scan and supplied thereto from the recognizing block 40. The data comparator 60 compares the output pattern data of the recognizing block with the pattern data of the preceding scan read out of the second memory 50, to thereby detect any change in the pattern data. The comparison output data of the data comparator 60 is supplied to a decision block 70 which output control data corresponding to the comparison output data. In response to the comparison output data, the decision block 70 refers to a data table (not shown) and outputs predetermined control data according to the touch on the touch panel 80.

As is apparent from the above description, in the conventional touch panel control device, the touch data of the present scan is merely compared with that of the preceding scan. Therefore, if the scanning speed is increased, the control device may judge no change in the touch position between two successive scans because the distance the finger can move over a scanning period is related to the scanning speed. If, on the other hand, the scanning speed is decreased, the following error may be encountered. If a finger finely touches and is removed from the panel and the part of the panel touched has not yet been scanned (for instance the right part of the panel in the case of scanning the panel in the left-to-right direction), then that touch on the panel may not be detected.

Referably, the entire panel surface should be scanned in about 10 msec to prevent a detection miss. However, if the scanning speed is set to about 10 msec, there may be an erroneous detection because, as mentioned herein before, finger speed cannot follow a rapid scanning speed.

Accordingly, an object of this invention is to eliminate the above-described difficulties with a conventional touch panel control device.

The foregoing object and other objects of the invention have been achieved by the touch panel control device of the invention for outputting control data to select an operating mode for an electronic device according to how the finger touches a touch panel. The touch panel control device of the invention comprises: touch position detecting means, arranged in matrix form on the touch panel, for detecting the coordinates of a touch position on the touch panel; scanning means for periodically scanning the touch position detecting means; memory means for storing the coordinates of an initial touch position on the touch panel or those of a touch position obtained when the control data is outputted; coordinate comparing means for comparing the coordinates stored in the memory means with those of a current touch position determined for each scan while the finger touches the panel; timer means for performing a time measuring opeation with the aid of the output of the touch position detecting means; and an operation discriminator for outputting operation content data predetermined according to time measurement data of the timer means and the results of the comparison of the coordinate comparing means. The nature, principle and utility of the invention will become more apparent from the following detailed description when read in conjunction with the accompanying drawings.

In the accompanying drawings:

Fig. 1 is a block diagram showing a conventional touch panel control device;

Fig. 2 is a front view showing a touch panel in a touch panel control device according to the invention;

Fig. 3 is a block diagram showing the touch panel control device according to the invention;

Fig. 4 is a circuit diagram of one example of a touch position detecting means in the touch panel control device of the invention;

Fig. 5 is a timing chart for a description of the operation of the touch position detecting means shown in Fig. 4;

Figs. 6, 7 and 8 are three parts of a flow chart for describing the operation of the touch panel control device of the invention; and

Figs. 9(a) and 9(b) are illustrations of displays on the touch panel.

An example of a touch panel control device according to this invention will be described with reference to Fig. 2. In Fig. 2, reference numeral 1 designates a touch panel. Along the four sides of the touch panel are LEDs (light emitting diodes) 101 through 114 and light receiving means, namely, photo-transistors 201 through 214. They are alternately arranged in such a manner that the photo-transistors 201 through 214 receive light beams from the LEDs 101 through 114, respectively. The photo-transistors 201 through 214 provide "H" (high level) outputs upon reception of the light beams. The LEDs and the photo-transistors are alternately arranged along the sides of the touch panel to eliminate the possibility that a photo-transistors might erroneously detect the light beam emitted by an adjacent LED rather than its corresponding LED.

A control system for the touch panel 1 is shown in Fig. 3. The control system includes a touch operation discriminator 2. The discriminator 2 detects when the operator's finger touches the touch panel 1, and discriminates the operation to be performed from the direction of finger movement and the time period over which the finger touches the touch panel. The discriminated operation is applied to a command discriminator 12. The command discriminator 12 supplies an operation command to a system controller 13 in response to the discriminated operation. The operation command controls the operation of an electronic device such as a cassette player, radio tuner, or compact disk player, and feed back the operating condition thereof, as data, to the command discriminator 12.

The operation discriminator 2 also applies a scanning pulse signal (STB signal) to a timing circuit 3 with a period of about 10 msec as shown in a timing chart of Fig. 5. The scanning time is not necessarily 10 msec. It should be determined on the basis of the speed of the finger scanning the panel. During the generation of the STB signal, the timing circuit 3 produces pulses for activating the LEDs 101 through 114 in Fig. 2 so that turn on input voltages are successively applied to the input terminals 301 through 314 of the LEDs 101 through 114. The light from the LEDs 101 through 114 are applied to the photo-transistors 201 through 214, respectively, the outputs of which are provided at an output terminal 400 in Fig. 4. The timing of the serial outputs is as indicated in Fig. 5. The serial outputs are applied to a serial-to-parallel converter 4, where they are converted into parallel outputs, which are latched by a data latch 5. One scanning operation is completed when the timing circuit 3 has applied the input voltages to all the LEDs. During a waiting time T, the data latched by the data latch 5 are successively transferred to the operation discriminator 2.

The timing chart of Fig. 5 represents the case where the finger touches the touch panel at a point marked with a circle in Fig. 2. In this case, the outputs of the LEDs 106 and 111 being blocked, and therefore the outputs of photo-transistors 206 and 211 are maintained at the "L" (low level). Therefore, the data latched by the data latch circuit 5 are:

1 1 1 1 1 0 1 1 in the X-direction

1 1 0 1 1 1 in the Y-direction

As apparent from the above, the coordinates of the touch position can be detected from the positions of the "O" levels in the data latch.

During the waiting time T, the output of the data latch circuit 5 are simultaneously applied to a NOR gate 8, the output of which is raised to "H" when the finger touches the panel.

With further reference to Fig. 3, reference numeral 6 designates a coordinate memory for storing the coordinates of a touch position at the start of a touch or at the end of an operation; and 7, a timer which is reset in synchronism with the storing operation of the coordinate memory 6, to start its time counting operation. The control system further comprises an arithmetic circuit (not shown) for comprising the coordinates of the present touch position with those stored in the coordinate memory 6, to detect the direction of movement of the finger on the panel 1; a touch memory 10 for storing the touch and non-touch on the touch panel 1; and a command memory 11 for storing the operation content which is discriminated by the operation discriminator 2 and applied tothe command discriminator 12.

The operation discriminator 2 supplies a CMD signal representing the content of an operation given to the touch panel 1 to the command discriminator 12. In response to the CMD signal the

command discriminator 12 applies a command to the system controller 13 for operating the acoustic device.

In general, the following commands are required for acoustic devices used in vehicles:

(1) Tape deck

Fast forward, rewind, stop, repetitive playback, jump for station, and playback

(2) Tuner

Up sweep, down sweep, preset channel up, preset channel down, channel preset, and auto tuning

(3) Compact disk

Playback, partial repeat, whole repeat, skip, stop, jump for music, and disk take-out

As is apparent from the above, six or seven different commands are required for each acoustic device used in vehicles.

These commands can be issued by utilization of, for instance, seven finger operations on the touch panel; movements of the finger upwardly, downwardly, right and left (U, D, R and L), keeping the finger at a point (KEEP), touching the panel with panel with the finger twice (2HIT). The above-described seven finger operations are discriminated so that the command discriminator 12 applies commands to the concerned acoustic device separately according to the finger operations.

The above-described seven finger operations can be discriminated not only by the contents of the aforementioned arithmetic circuit, but also based on the content of the touch memory circuit 10 in which the touch condition of the preceding scan is stored, the content of the command memory 11 which stores the command which has been applied to the command discriminator 12 before the scan, and the time count in the timer 7.

For instance, the commands can be issued as follows:

(1) When the coordinate changes are at least four a second, the commands U, D, R and L are outputted separately according to the directions of movement thereof.

(2) The command KEEP is outputted when the finger is kept on the touch panel for at least one second and moves three coordinates or less.

(3) The command HIT is output when the finger is kept on the panel for 0.5 second or less, and moves three coordinates or less.

(4) the command 2HIT is outputted when, within two seconds after the issue of the command HIT, the finger is operated in the same manner as in the case of outputting the command HIT.

A method of discriminating the above-described finger operations will be described with reference to the flow charts of Figs. 6, 7, and 8.

In these figures, steps 1 through 7 form a routine for starting when the finger touches the panel, storage of the coordinates of that position and the operation of the timer. When the operation discriminator 2 outputs a scan instruction signal (STB) in step 1, in step 2 it is determined whether or not the finger touches the panel. When it is determined that the finger has touched the touch panel, in step 3 the coordinates of that position are read. In step 4, the content of the touch memory 10, which stores the touch condition of the preceding scan, is read to determine whether or not the finger touches the panel for the first time. When it is determined that the content of the touch memory 10 has been cleared, then in step 5 "1" is written in the touch memory, in step 6 the above-described coordinates of the position are stored in the coordinate memory 6, and step 7 the timer is reset and started.

(1) Discrimination of the finger operations U, D, R and L

Discrimination of the finger operations U, D, R and L are achieved in Steps 8 through 17.

In step 8, the coordinates stored in the coordinate memory 10 are compared with the present coordinates to obtain the variations in the X- and Y-directions. In step 9, by referring to the command memory 11 which stores the operation content outputted previously, it is determined whether or not the upward, downward, rightward or leftward operation has been applied to the command discriminator 12. If it is determined that the command has been applied thereto, then it is unnecessary to discriminate the movement in that direction again, and steps 11 and 11^1 are effected in which, when the finger is moved eight coordinates or more, the movement in a direction perpendicular to the direction of that movement is detected so that the finger movement may not be regarded as "the finger is moved four coordinates twice". If no command is applied to the command discriminator 12, then in step 10 it is determined from the above-described variations whether the finger is moved horizontally or vertically.

In step 12, it is determined whether, in each of the X- and Y-directions, the finger is moved in the positive (+) direction or in the negative (-) direc-

tion, so that in step 13 the operation content corresponding to the direction of movement is provided.

In step 14, the operation content thus provided is applied in the command discriminator 12 (in this operation, the command discriminator 12 supplies the instruction to the system controller 13 which has been predetermined for the electronic equipment in use), and in step 15 the operation content is stored in the command memory 11.

In step 16, the coordinates stored in the coordinate memory are rewritten into those of the touch position obtained at the time of outputting the operation content. And in step 17, the timer is reset so that the following discrimination is carried out.

(2) Discrimination of the finger operation KEEP

The finger operations KEEP and HIT are distinguished from each other according to how long the finger touches the touch panel. Therefore, if the finger operation KEEP is determined merely from the time count data of the timer 7, then the determination may include the finger operation HIT. That is, in the following case:

0 to 0.5 second HIT
0.5 to 1 second Not applicable
More than 1 second KEEP

while the finger operation KEEP is discriminated, the finger operation HIT may occur. In the case where the touch time is 0.5 to 1 second, no action is taken, as was listed above. This is to prevent an erroneous operation which may be caused when the finger operations are not strictly defined. Therefore, the step may be eliminated as the case may be.

Therefore, in a routine consisting of steps 18 through 25 as shown in Fig. 7, when in step 20 the time count data of the timer exceeds one (1) second and in step 22 it is determined that the finger operation KEEP has not been supplied, as the operation content, to the command discriminator 12, then it is supplied, as the operation content, to the command discriminator 12 in step 24. The reason why, in step 22, it is detected whether or not the finger operation KEEP has been supplied as the operation content is to prevent the difficulty that, when the finger touches the touch panel for more than two seconds, the finger operation KEEP may be provided as the operation content two or more times.

When in step 18 the touch time is shorter than 0.5 second, in step 19 the finger operation HIT is provided as the operation content; however, it is not applied to the command discriminator 12 yet in the flow chart.

(3) Discrimination of the finger operations HIT and 2HIT

The finger operations HIT and 2HIT can be identified as shown in a flow chart of Fig. 8.

When in step 2 of Fig. 6 it is determined that the finger is not in touch with the touch panel, then in step 26 it can be determined by referring to the touch memory 10 adapted to store the touch or non-touch detected in the preceding scan whether or not the touch was just now released. When it is determined that the touch was released just now, then the content of the touch memory 11 is "1". In step 27, the content of the touch memory 11 is cleared, and in step 29 it is determined whether or not the operation content is of the finger operation HIT. That is, if in step 19 of Fig. 7 the finger operation HIT is provided as the operation content, then step 30 is effected. In step 30, when it is determined from the content of the command memory 11 that nothing is provided, then the operation content, or HIT, is applied to the command discriminator 12. If the finger operation HIT is stored as the operation content in the command memory 11, then it is the second finger operation HIT, and therefore the finger operation 2 HIT is applied as the operation content to the command discriminator 12. If the storage data of the command memory 11 is other than that, then in a routine of steps 36 through 38 the command memory and the operation content are cleared, and the timer is stopped.

When in step 26 it is determined that the content of the touch memory 10 has been cleared since the preceding scan, then step 28 is effected. If, in step 28, the timer shows the lapse of two seconds; i.e., nothing is operated for two seconds, then the routine of steps 36, 37 and 38 is effected.

The operation discriminator 2 can apply the seven operating modes to the command discriminator 12 in the above-described manner.

In the operation discriminator 2, the above-described operation contents are converted into commands suitable for the operations of the acoustic devices to be controlled in such a manner that any one of the commands can be used for a plurality of acoustic devices - for instance the finger operation R is used for the "up direction sweep" of a tuner and also for the "fast forward" of a tape deck. The commands are applied to the system controller 13. In response to the commands are applied to the system controller 13. In response to the commands, the system controller 13 controls the operations of the acoustic devices.

In the above-described embodiment, the seven finger operations are discriminated, and in response to the seven finger operations thus discriminated the command discriminator outputs the

commands. If the seven finger operations are utilized in combination, then more commands can be issued.

For instance, in the case of a tape deck, the finger operations, may be combined as follows: When, after the "fast forward" operation is selected by the finger operation R, the finger operation U is carried out, a so-called "FF SCAN" operation can be performed in which the "fast forward" operation of the tape is carried out to detect an intermusic region, and after the sound reproduction is performed, the "fast forward" operation is carried out again. And when the finger operation R is followed by the finger operation D, the "FF music search" operation is carried out.

In this case, the system controller 13 applied data representing the operating condition of the acoustic device to the command discriminator 12 at all times, and the command provided by the command discriminator is determined according to the operating condition.

In the case of the tape deck described above, normally the finger operation R is used for the command "fast forward", and the finger operation U is for the command "volume up". However, during the "fast forward" operation, the finger operation U is used to output the command "FF scan".

If a plurality of operation contents are combined to provide a command in the above-described manner, then the finger operations can be applied to a variety of operation modes of acoustic devices mounted in a vehicle.

The touch panel 1 may comprise a picture display unit such as a cathode ray tub (CRT). The system controller 13 applies display mode data to a CRT driver 14 in correspondence to an acoustic device in use, to thereby control the display to the touch panel 1.

Figs. 9(a) and 9(b) show examples of a CRT display. more specifically, the part (a) of Fig. 9 shows a CRT display in the "tape deck" mode, and the past (b) of Fig. 9 shows a CRT display in a "tuner" mode.

In Fig. 9, the finger operations U,D, R and L are indicated by the arrows which are extended upwardly downwardly, rightwardly and leftwardly, respectively; and finger operations HIT, 2HIT and KEEP are indicated by one dot, two dots and a bar, respectively; and the compound finger operations are indicated by the bent arrows - for instance the compound finger operation R U is indicated by the arrow which is extended rightwardly and then upwardly.

Therefore, merely by moving the finger according to the indications or marks displayed on the touch panel, the commands corresponding to the finger operations can be applied to the system controller 13.

The contents of the display on the display unit can be changed according to the operating conditions of an acoustic device to be controlled. For instance, for the "fast forward" operation of a tape deck, the mark " ⊳⊳ " is caused to flicker or its color is changed, to that the operator can detect whether or not the finger operation on the touch panel has been carried out correctly, to thereby prevent erroneous operation.

As shown in Fig. 9 the display mark "2nd" is provided for the finger operation KEEP. It can be utilized in the case where the number of finger operations is smaller than the number of commands to be issued. That is, in this case, the first picture display is switched over to the second picture display by one finger operation (KEEP in this case) so that the command discriminator 12 can provide commands different from those used when the first picture display is employed. That is, more intricate operations of electronic devices can be controlled.

As is apparent from the above description, the predetermined commands can be issued according to the distance of movement of the finger over the touch panel, the period of time for which the finger touches the touch panel, and the number of times the touch panel is touched with the finger, and one and the same touch panel can be used for a plurality of acoustic devices such as a cassette tape player and a radio tuner installed in a vehicle. Therefore, the limited space in the vehicle can be efficiently utilized, and the touch panel control device installed will never obstruct the operator's driving. Furthermore, since the touch panel serves as the display unit, the probability of erroneous operation is decreased.

Claims

1. A touch panel control device for outputting control data to select an operation mode for an electronic device according to how the finger touches a touch panel (1) comprising:
touch position detecting means (101,114,201,214) in a matrix form on said touch panel, for detecting the coordinates of a touch position on the touch panel;
scanning means (2) for periodically scanning said touch position detecting means;
memory means (6) for storing the coordinates of at least one initial touch position on the touch panel and the coordinates of a touch position obtained when the control data is outputted;
coordinate comparing means for comparing for each scan, the coordinates stored in the memory means with those of a current touch position while

the finger touches the panel;
timer means (3) for performing a time measuring operation with the aid of an output of the touch position detecting means; and
an operation discriminator (2) for outputting the operation content data predetermined accordingly to time measurement data of the timer means and the results of comparison of the coordinate comparing means.

2. A touch panel control device as claimed in claim 1, wherein the touch position detecting means comprises light emitting elements (101-114) and light receiving elements (201-214) arranged along the sides of the touch panel (1) in such a manner that said light receiving elements receive light beams emitted by respective said light emitting elements.

3. A touch panel control device as claimed in claim 1, in which the touch panel comprises a picture display unit, the display content of which is changeable according to an electronic device to be controlled and operating conditions thereof.

4. A touch panel control device as claimed in any of claims 1 to 3, wherein the operation discriminator (2) includes means for discriminating the operation content data to be outputted from a plurality of predetermined operation content data based upon the direction and distance the finger moves in a predetermined period of time.

5. A touch panel control device as claimed in claim 4, wherein the operation discriminator (2) further includes means for discriminating the operation content data based on the time duration that the finger touches the touch panel while moving less than a predetermined distance.

Neu eingereicht / Newly filed
Nouvellement déposé
(R 35)

FIG. 1

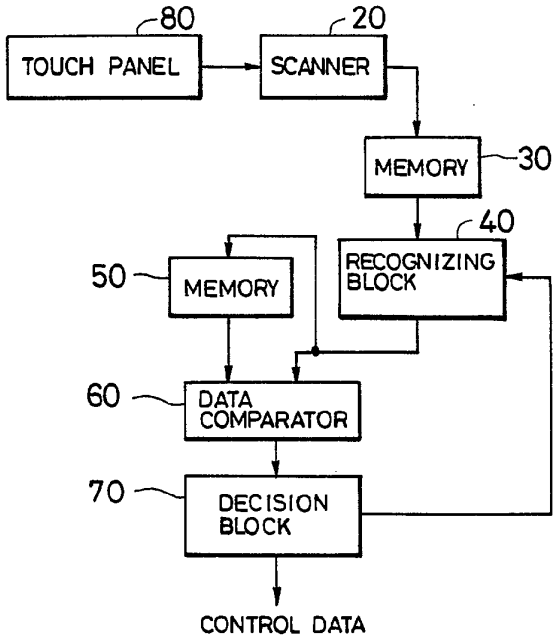

FIG. 2

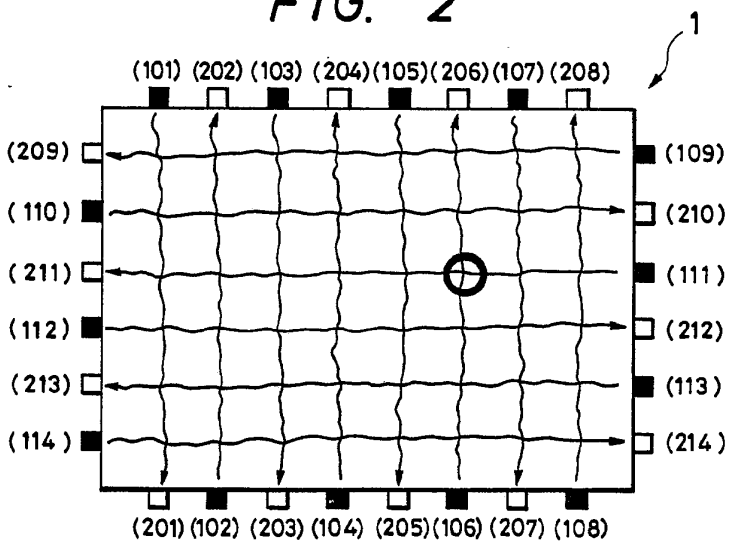

Neu eingereicht / Newly filed
Nouvellement déposé
(R 35)

FIG. 3

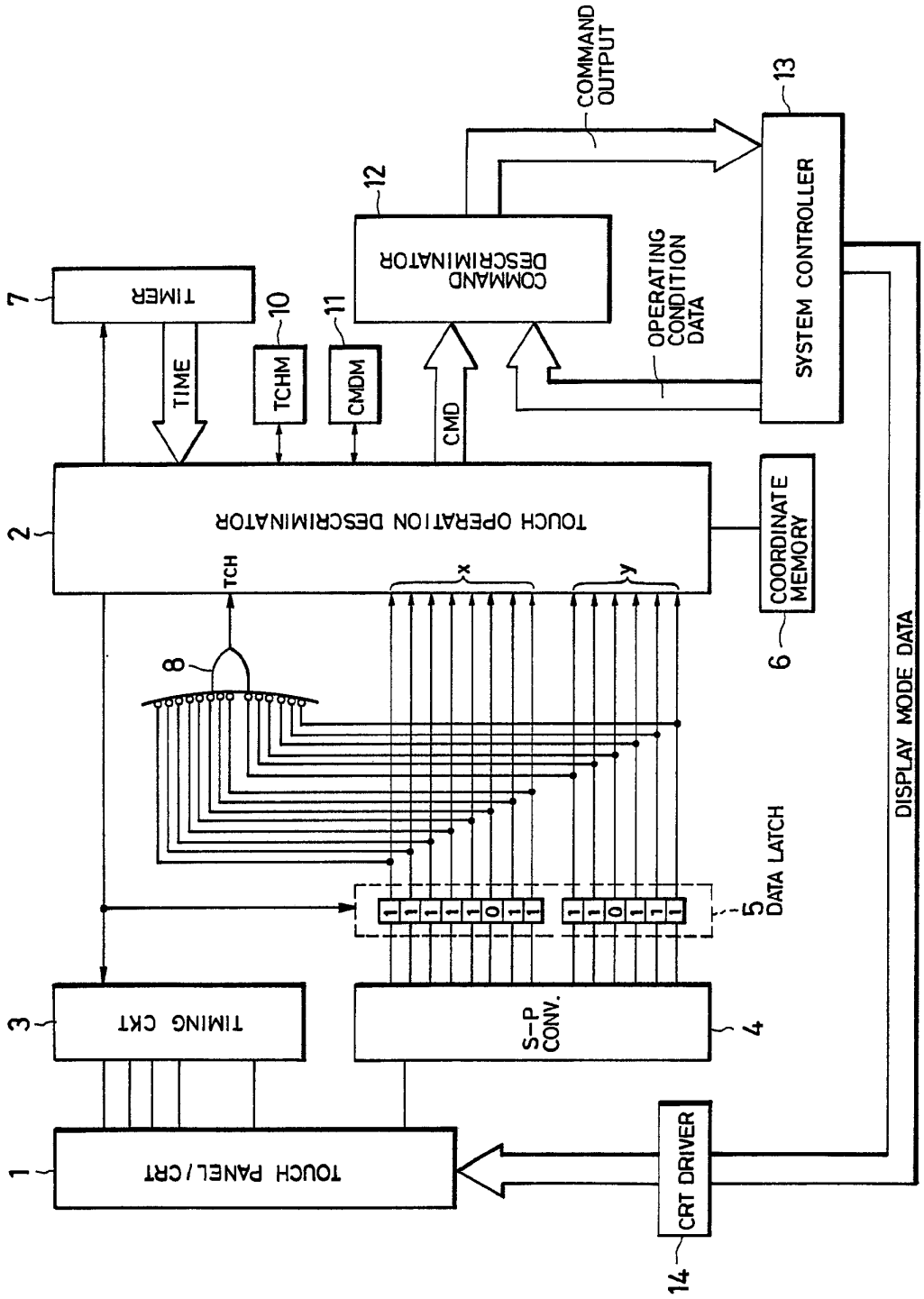

FIG. 4

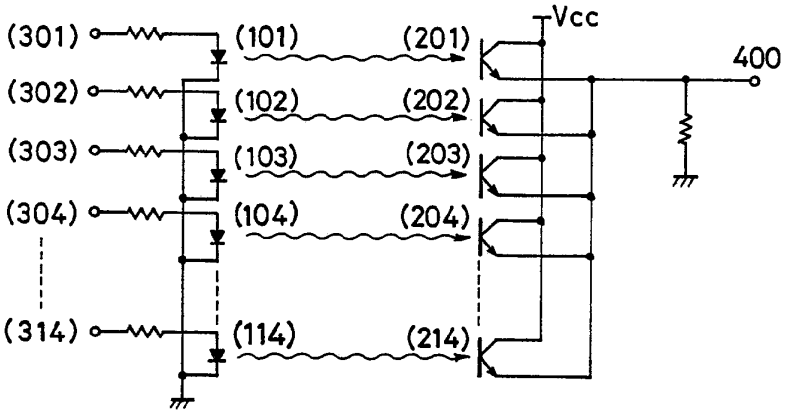
(301)
(302)
(303)
(304)
(314)
(101)
(102)
(103)
(104)
(114)
(201)
(202)
(203)
(204)
(214)
Vcc
400

FIG. 5

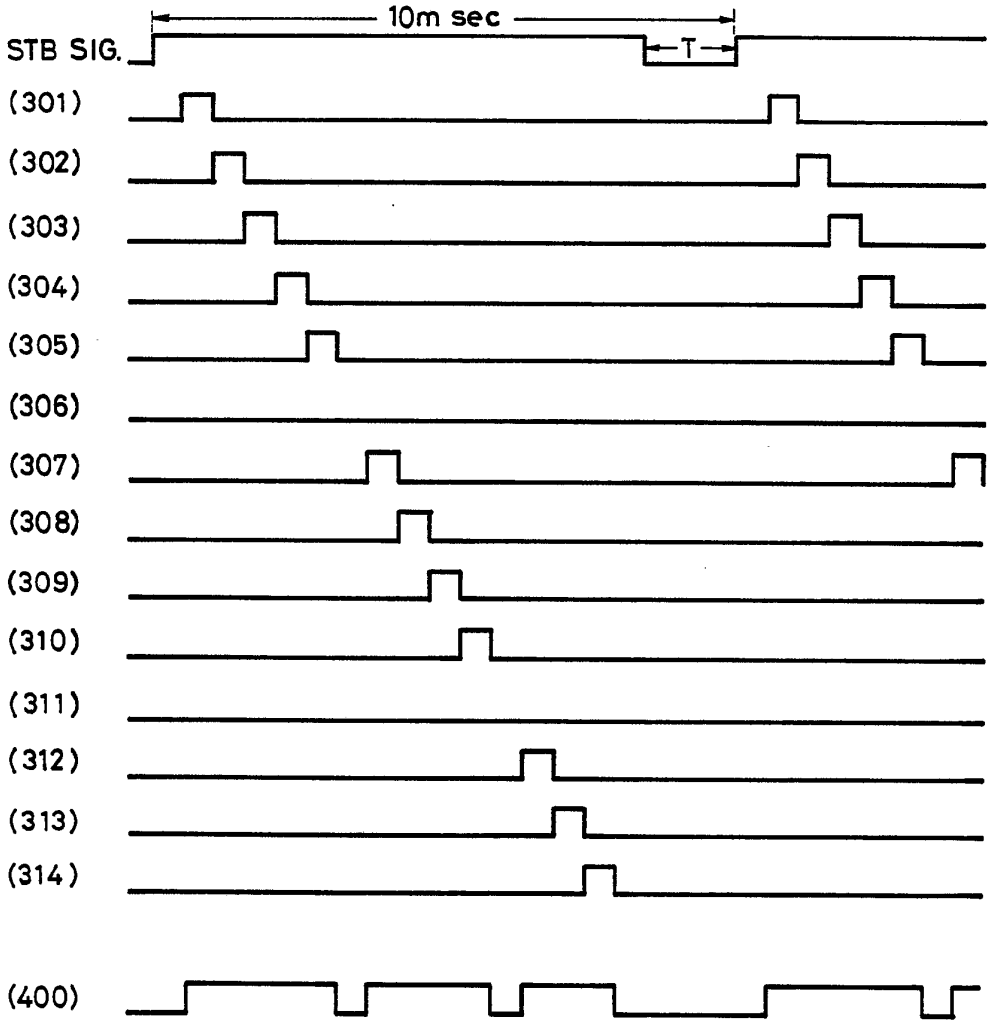
10m sec
T
STB SIG.
(301)
(302)
(303)
(304)
(305)
(306)
(307)
(308)
(309)
(310)
(311)
(312)
(313)
(314)
(400)

FIG. 6

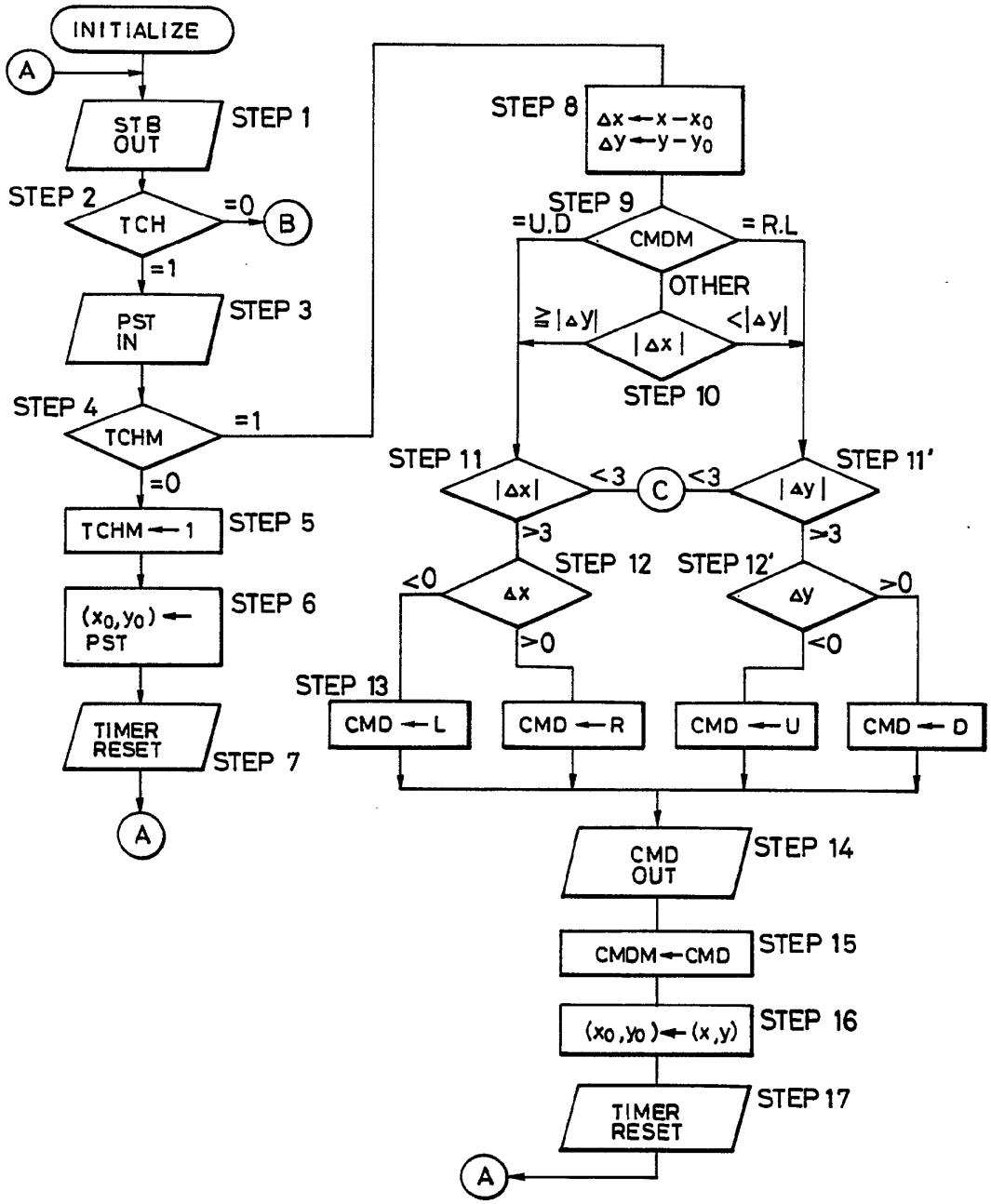
INITIALIZE
A
STB OUT
STEP 1
STEP 2
TCH
=0
B
=1
PST IN
STEP 3
STEP 4
TCHM
=1
=0
TCHM ← 1
STEP 5
(x0, y0) ← PST
STEP 6
TIMER RESET
STEP 7
A
STEP 8
Δx ← x − x0
Δy ← y − y0
STEP 9
=U.D
CMDM
= R.L
OTHER
≧|Δy|
|Δx|
<|Δy|
STEP 10
STEP 11
|Δx|
<3
C
<3
|Δy|
STEP 11'
>3
>3
STEP 12
STEP 12'
<0
Δx
>0
Δy
>0
<0
STEP 13
CMD ← L
CMD ← R
CMD ← U
CMD ← D
CMD OUT
STEP 14
CMDM ← CMD
STEP 15
(x0, y0) ← (x, y)
STEP 16
TIMER RESET
STEP 17
A

FIG. 7

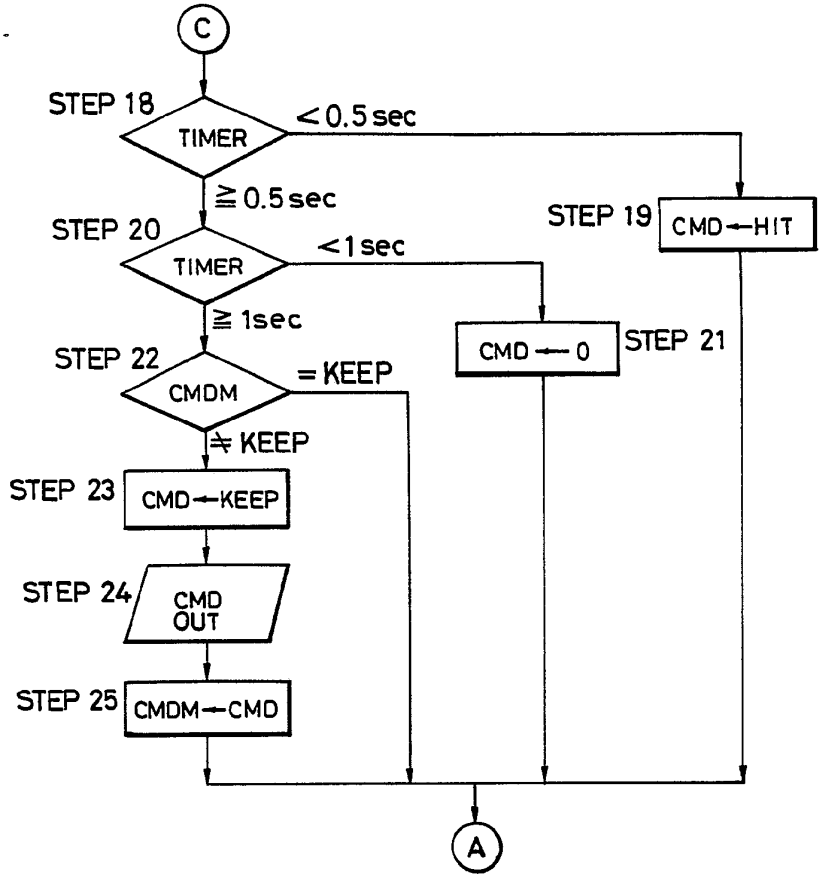

FIG. 9(a)

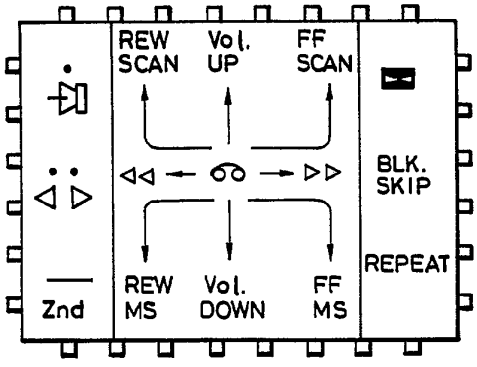

FIG. 9(b)

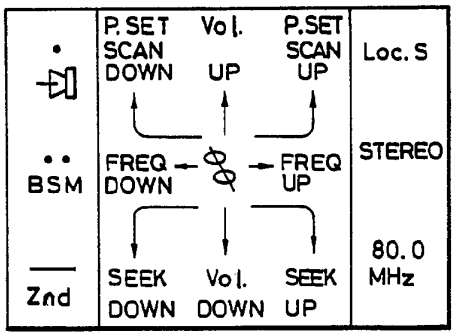

FIG. 8

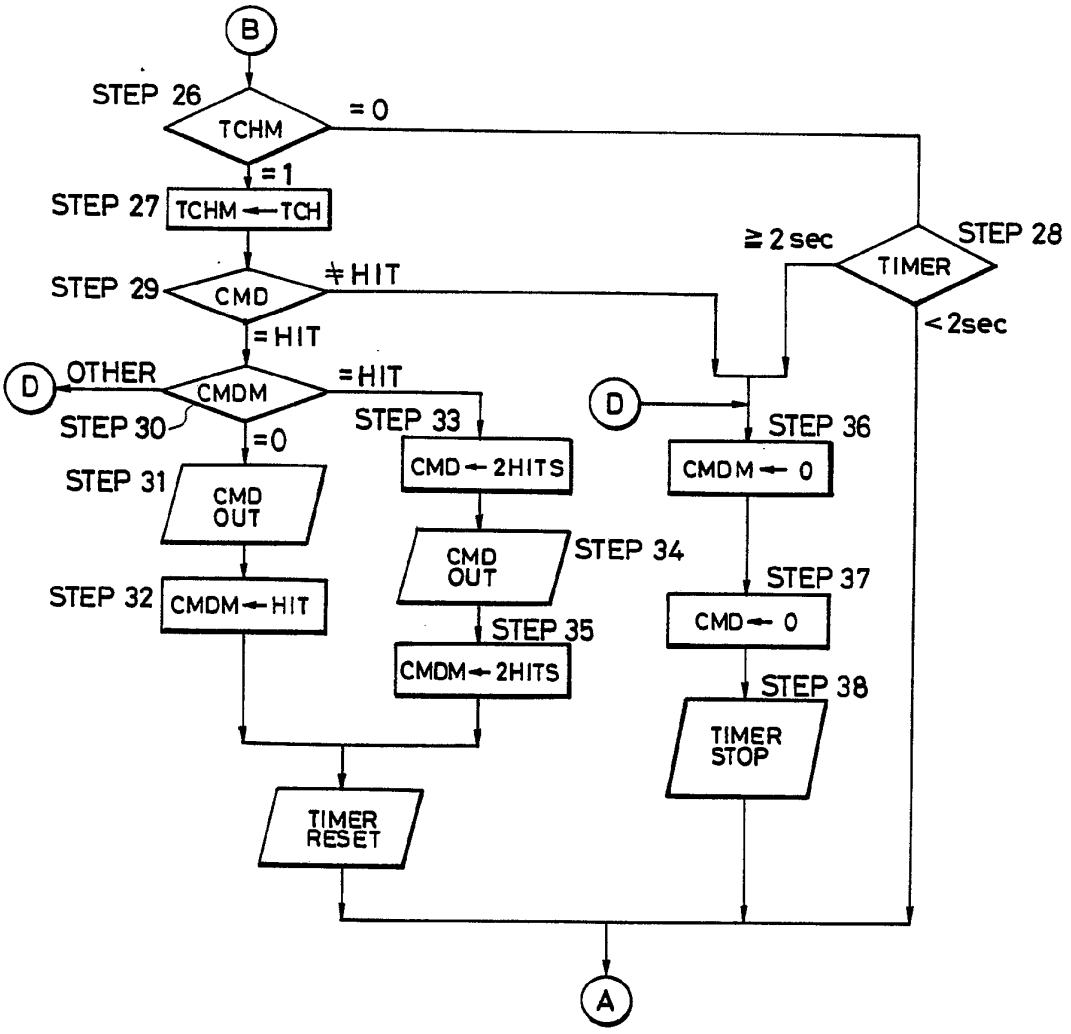
B
STEP 26
TCHM
= 0
= 1
STEP 27
TCHM ← TCH
STEP 28
≧ 2 sec
TIMER
< 2sec
STEP 29
CMD
≠ HIT
= HIT
D
OTHER
CMDM
= HIT
STEP 30
= 0
STEP 31
CMD OUT
STEP 32
CMDM ← HIT
STEP 33
CMD ← 2HITS
CMD OUT
STEP 34
STEP 35
CMDM ← 2HITS
TIMER RESET
D
STEP 36
CMDM ← 0
STEP 37
CMD ← 0
STEP 38
TIMER STOP
A

European Patent Office

EUROPEAN SEARCH REPORT

Application Number

EP 88 30 1738

DOCUMENTS CONSIDERED TO BE RELEVANT

Category	Citation of document with indication, where appropriate, of relevant passages	Relevant to claim	CLASSIFICATION OF THE APPLICATION (Int. Cl.4)
A	WO-A-8 505 477 (BEINING) * Figures 2,3; page 1, line 22 - page 2, line 10; page 4, lines 4-9 *	1-5	G 06 K 11/06
A	EP-A-0 150 904 (CARROLL et al.) * Figure 3; page 3, lines 11-24, line 32 - page 4, line 7; page 8, lines 1-29 *	1,2	
A	IBM TECHNICAL DISCLOSURE BULLETIN, vol. 20, no. 4, September 1977, pages 1609-1611, New York, US; T.F. CUMMINGS: "Transparent keyless keyboard for variable terminal applications" * figures 1,2; page 1609, line 1 - page 1610, line 24 *	1-3	
			TECHNICAL FIELDS SEARCHED (Int. Cl.4) G 06 K 11

The present search report has been drawn up for all claims

Place of search	Date of completion of the search	Examiner
THE HAGUE	21-10-1988	WEISS P.

CATEGORY OF CITED DOCUMENTS

X : particularly relevant if taken alone
Y : particularly relevant if combined with another document of the same category
A : technological background
O : non-written disclosure
P : intermediate document

T : theory or principle underlying the invention
E : earlier patent document, but published on, or after the filing date
D : document cited in the application
L : document cited for other reasons

& : member of the same patent family, corresponding document

EPO FORM 1503 03.82 (P0401)

PCT WORLD INTELLECTUAL PROPERTY ORGANIZATION
International Bureau

INTERNATIONAL APPLICATION PUBLISHED UNDER THE PATENT COOPERATION TREATY (PCT)

(51) International Patent Classification 4 : G06K 11/06 — A1

(11) International Publication Number: WO 86/ 00446

(43) International Publication Date: 16 January 1986 (16.01.86)

(21) International Application Number: PCT/US85/00922

(22) International Filing Date: 20 May 1985 (20.05.85)

(31) Priority Application Numbers: 621,575; 621,586

(32) Priority Dates: 18 June 1984 (18.06.84); 18 June 1984 (18.06.84)

(33) Priority Country: US

(71) Applicant: AMP INCORPORATED [US/US]; P.O. Box 3608, Harrisburg, PA 17105 (US).

(72) Inventors: LUCAS, Paul, Barkley ; 1504 Rutledge Drive, Urbana, IL 61801 (US). GARRETT, James, Edward ; 715 South Prairie Street, Champaign, IL 61820 (US).

(74) Agents: SEITCHIK, Jay, L. et al.; AMP Incorporated, P.O. Box 3608, Harrisburg, PA 17105 (US).

(81) Designated States: AT (European patent), BE (European patent), CH (European patent), DE (European patent), FR (European patent), GB (European patent), IT (European patent), JP, KR, LU (European patent), NL (European patent), SE (European patent).

Published
With international search report.

(54) Title: TOUCH INPUT DEVICE

(57) Abstract

An infrared touch input system is taught. Briefly stated, the system comprises a four-sided frame having an infrared transparent bezel (20) along the inside thereof and having infrared emitters (CR) along the bottom and one side of the frame with infrared detectors (Q) along the sides opposite the emitters. Darlington transistor arrays (U3, U4, U8, U9) are used as source and sink drivers for driving the LED's in an array. The I/O lines of a microprocessor (U2) in conjunction with the source and sink drivers are used to selectively energize each LED. Additional I/O lines (PB0-PB5, PC0-PC2) of the microprocessor in conjunction with BCD decoders are used to selectively energize corresponding infrared detecting phototransistors (Q) before, during and after LED turn-on. A host computer supplies a clocking signal for the microprocessor with programming in the microprocessor thereby automatically performing the selection and deselection of emitters and detectors. A serial data stream (DATA) is outputted from the microprocessor which indicates to the host computer the location of any broken light beams (22) thereby indicating a stylus (18) hit. Further, the optical power used with emitter-detector pairs (CR0-CR7, Q0-Q7) adjacent the corners of the bezel (20) is reduced with respect to emitter-detector pairs approaching the center of the bezel. In this manner, light which is reflected (26) after striking the side of the bezel adjacent the emitter-detector pair and which is received by the emitter is of low intensity or is ignored.

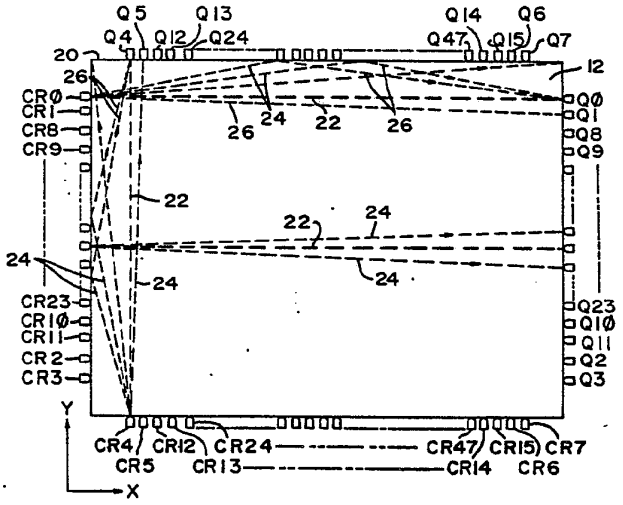

FOR THE PURPOSES OF INFORMATION ONLY

Codes used to identify States party to the PCT on the front pages of pamphlets publishing international applications under the PCT.

AT	Austria
AU	Australia
BB	Barbados
BE	Belgium
BG	Bulgaria
BR	Brazil
CF	Central African Republic
CG	Congo
CH	Switzerland
CM	Cameroon
DE	Germany, Federal Republic of
DK	Denmark
FI	Finland
FR	France
GA	Gabon
GB	United Kingdom
HU	Hungary
IT	Italy
JP	Japan
KP	Democratic People's Republic of Korea
KR	Republic of Korea
LI	Liechtenstein
LK	Sri Lanka
LU	Luxembourg
MC	Monaco
MG	Madagascar
ML	Mali
MR	Mauritania
MW	Malawi
NL	Netherlands
NO	Norway
RO	Romania
SD	Sudan
SE	Sweden
SN	Senegal
SU	Soviet Union
TD	Chad
TG	Togo
US	United States of America

TOUCH INPUT DEVICE

The present invention is related to material disclosed in the following concurrently filed, copending U.S. patent application, which is assigned to the same assignee as the present invention, given Serial No. 621,585, "Touch Input Device Having Digital Ambient Light Sampling" filed June 18, 1984.

The invention relates, generally, to a touch input device and, more particularly, to an opto-matrix frame having automatic corner glare compensation.

Coincident with the use of video displays has always been the problem of the man/machine interface. Traditionally, control of displayed information or cursors has been via a keyboard. Recently, however, a number of devices have been introduced which allow an operator to directly interact with the video display. These types of devices have included light pens, desk-type mouse controllers, or touch input devices such as a switch matrix or opto-electronic matrices. While generally switch-type overlays which are placed adjacent a video display are inexpensive to apply and utilize, they are generally susceptible to contact wear as well as distortion of the video information which is presented to the viewer, particularly in high usage environments. However, since opto-matrix schemes utilize light, which is generally in the infrared region, the switch matrix presented by the light beams is invisible to the viewer and, therefore, does not distort the video information displayed to the viewer and is not subject to wear in high usage environments. A number of schemes which utilize opto-matrix frames may be found in U.S. Patent No. 4,267,443 "Photoelectric Input Apparatus", issued May 12, 1981 to Carroll et al; U.S. Patent No. 4,243,879 "Touch Panel with Ambient Light Sampling", issued January 6, 1981 to Carroll et al; and U.S. Patent No. 3,764,813 "Coordinate Detection System", issued October 9, 1973 to Clement et al. These three schemes address problems inherent with opto-matrix devices such as increasing frame resolution without a corresponding increase in components,

surrounding or ambient light compensation, or optimization of emitter/detector driving and detecting networks respectively. These systems still have drawbacks in some areas such as large component usage thereby resulting in higher costs, ambient light sensing which is based on a predetermined value rather than dynamically, and difficulty in compensating for reflection or glare which may result in styli hits not being recorded.

Glare problems generally occur when an emitter is adjacent the corner of the frame or bezel such that light produced by the emitter bounces off an adjacent surface and is then detected by the detector such that any stylus which is introduced to the video display inherently blocks the majority of the light received by the detector but the reflectant light is sufficiently high for the detector and its associated circuitry to not perceive a hit. Accordingly, it is desirable to have a device which minimizes the number of components necessary for addressing and detecting emitters and detectors. Further, it is also desirable to have a device which dynamically compensates for ambient light and for variations in emitter output and detector sensitivity. Also, it is desirable to have a device which minimizes glare problems. Such a scheme is taught in the present invention.

It is a principal object of the invention to provide a touch input device for detecting at least one passive styli, comprising an opto-matrix frame having a plurality of optical emitters and oppositely positioned optical detectors disposed in the opto-matrix frame and having an optically transparent bezel adjacent thereto, characterized in that the plurality of optical emitters are electrically interconnected in a matrix such that the anodes form one side of the matrix and the cathodes form the other side of the matrix, the plurality of optical detectors are electrically interconnected in a matrix such that the anodes or the like form one side of the matrix and the cathodes or the like form the other side of said matrix, a first driving device is connected to the optical emitters for selectively energizing at least one emitter at a time, a first decoding or selecting device

is connected to the optical detectors for selectively energizing at least one detector at a time, wherein the optical power of at least one emitter and/or sensitivity of at least one detector disposed adjacent corners of the optically transparent bezel is decreased with respect to the remainder of the emitters and detectors thereby minimizing the effects of reflected radiant energy while a microcomputer is interconnected to the first and second driving devices so as to sequentially energize the first and second driving devices, wherein the microcomputer produces a data output signal which corresponds to the presence or absence of radiant energy received by one of the optical detectors coincident with the presence or absence of the passive styli.

Reference is now made to the accompanying drawings in which:

FIGURE 1 is a representative view of an operator utilizing a video display;

FIGURES 2, 3 and 4 form a complete schematic diagram for use in conjunction with the touch input entry device of the present invention;

FIGURE 5 is a representational view of glare produced by the frame surrounding the opto-matrix devices as well as a numbering assignment of the emitters and detectors of the present invention;

FIGURES 6 through 11 are flow chart diagrams for use with the preferred embodiment of the present invention; and

FIGURE 12 is a timing diagram of the data output for use with the present invention.

Referring now to Figure 1, there is illustrated a representative view of an operator utilizing a video display. Shown is a CRT 10 having a display area 12 and which generally interacts with a keypad or keyboard 14. An operator 16 interacts with the display area 12 through the use of the stylus 18, which in the preferred embodiment of the present invention, is the finger of the operator thereby presenting a truly

touch-type interactive system. It is to be understood, however, that other types of styli can and may be used without departing from the spirit and scope of the present invention such as, for example, pencils, pointers, or other similar types of apparatus. While the keypad 14 is shown, it is one of the primary objects of the present invention to utilize the keypad 14 as little as possible, if at all, with the operator 16 utilizing the stylus 18 for direct interaction with the CRT. A touch input area is generally defined by what the operator 16 sees in the display area 12. In the preferred embodiment of the present invention, this touch area utilizes emitters which are disposed on the bottom and one side of the display with detectors located on the top and opposite side thereby forming an infrared light beam matrix (shown more clearly in Figure 5). The light beams (not shown) shine through the bezel 20 which is disposed around the edge of the CRT 10 and which, in the preferred embodiment of the present invention, is opaque to visible light but transparent to infrared light. It is to be understood, however, that other types of bezels which exhibit different types of light transmission properties may be utilized.

Referring now to Figures 2, 3 and 4, there is illustrated a schematic for the present invention. A list of the major component designations and functions is shown in Table I below.

TABLE I

Component Number	Component Type
U1	Schmidt Trigger Inverter
U2	Microprocessor
U3, U4, U8, U9	Darlington Transistor Array
U5, U6, U7	BCD-to-Decimal Decoder
CR0-CR47	Light Emitting Diodes (Emitters)
Q0-Q47	Phototransistors (Detectors)

Also shown is a microprocessor U2 which, in the preferred embodiment of the present invention, is an 8-bit microcomputer having on-board analog-to-digital converter as well as RAM and ROM, and is an HMOS device preferably of the 6800 family of microcomputers produced by companies such a Motorola of Austin, Texas. It is to be understood, however, that other types of microcomputers can be utilized which may be CMOS or NMOS and which have been produced by other manufacturers having different bit-byte configurations such as 16 or 32-bit bytes. These machines like the preferred 6800 family architecture are readily known and available to one skilled in the art. The design of the present invention does not require the use of all features and pins attendant to the U2 microprocessor and therefore only those utilized will be discussed and are shown. The Vcc terminal is connected to Vcc power which, in the preferred embodiment of the present invention, is +5 Volts and is also connected to terminal Vpp. Vcc supplies operating power to most of the microprocessor U2 while Vpp supplies the programming voltage for the ROM memory in the microprocessor U2 which, in the preferred embodiment of the present invention, is EPROM, although it is to be understood that masked versions of the microprocessor may be utilized with the result that Vpp is no longer necessary. The XTAL and EXTAL terminals have a crystal disposed therebetween with the EXTAL terminal having one terminal of capacitor C2 connected thereto with the remaining terminal of capacitor C2 connected to Ground (Gnd). This thereby provides a stabilized clock frequency for the entire system of the present invention. The RESET terminal is connected to one terminal of capacitor C3 with the remaining terminal of capacitor C3 also connected to Gnd. Terminal PC5, which is an I/O pin, is connected to the interrupt terminal INT and is connected to the output of the A inverter of device U1 which is a Schmidt-type trigger inverter with the input to inverter A of component U1 being connected to one terminal of R1 and one terminal of R2 as well as to the clock terminal which

is thereafter provided by a host computer (not shown). The remaining terminals of R1 and R2 are connected to Vcc and Gnd respectively. The I/O pin PC7 is connected to the input of the B inverter of device U1 with the output of the B inverter of device U1 being a data output terminal which is also connected to a host computer (not shown). Also shown on Figure 2 is capacitor C1 which acts as a filtering capacitor and is connected such that one terminal is attached to the +5 or Vcc bus with the other terminal attached to the Gnd bus. Port B I/O lines PB0, PB1, PB2, PB3, PB4, PB5 and PB7 provide coding and decoding for the emitters and detectors of the present invention as shown more clearly in Figures 3 and 4. Pin Vrh is a voltage reference high pin which provides the high voltage reference for the analog/digital conversion portion of the microprocessor U2. The Vrl pin is a voltage reference low pin which provides the low reference voltage for the analog-to-digital portion of the microprocessor U2. Port C terminals PC0, PC1, PC2, PC3 and PC4 are I/O pins which interconnect with the coding and decoding of the emitter/detector array as shown more clearly in Figures 3 and 4. Analog-to-digital terminals AN0, AN1, AN2 and AN3 are interconnected with the detection circuitry as shown more clearly in Figure 4. The Vss terminal of the microprocessor U2 is connected to Gnd, while I/O pin PD6 is connected to one terminal of resistor R6. The remaining terminal of resistor R6 is connected to Vcc.

Referring now to Figure 3, the emitter portion of the present invention is shown. The PB0 line is connected to one terminal of resistor B of resistor network R3 as well as to the base terminal of one of the Darlington transistor pairs of component U3, a Darlington transistor array, while I/O line PB1 is connected to resistor A of resistor network R3 which is in turn connected to the base of another Darlington transistor pair of component U3. Similarly, I/O lines PB2, PB3, PB4 and PB5 are connected to resistors F, E, D and C respectively of resistor network R3 as well as to a base terminal of the Darlington

transistor pair contained in component U4, also a Darlington transistor array. The remaining terminals of resistors A, B, C, D, E and F of resistor network R3 are tied together and thereafter to Vcc. The Vrh line is connected to one terminal of resistors R4 and R5 with the remaining terminals of resistors R4 and R5 being connected to Vcc and Gnd respectively. The I/O line PB7 is connected to the D input of component U5 which is a binary coded decimal (BCD) to decimal decoder while PC0, PC1 and PC2 (supplied by component U1, not shown) are connected to the A, B and C inputs respectively of decoder U5. The collector terminal associated with the Darlington transistor pair for I/O line PB0 is connected to one terminal of resistor R10 while the collector terminal associated with the Darlington pair for I/O line PB1 is connected to one terminal of resistor R9. The remaining terminals of resistor R9 and R10 are thereafter connected to each other and to one terminal of resistor R8 and capacitor C4 as well as to all four of the collector terminals associated with the Darlington transistor array U4. The remaining terminal of resistor R8 is connected to Vcc while the remaining terminal of capacitor C4 is connected to Gnd. The SUB terminals of Darlington transistor arrays U3 and U4 are connected to Gnd. The emitter terminal of the Darlington transistor pair associated with I/O line PB0 of component U3 is connected to the anode of emitters CR0, CR1, CR2, CR3, CR4, CR5, CR6 and CR7 while similarly the emitter of component U3 which is associated with the I/O line PB1 is connected to the anode of emitters CR8 through CR15. The emitters in the preferred embodiment of the present invention are infrared light emitting diodes although it is to be understood that other types of emitters can and may be utilized without departing from the spirit and scope of the present invention. Similarly, the emitter terminals associated with I/O lines PB2, PB3, PB4 and PB5 of Darlington transistor array U4 are connected to the anodes of emitters CR16-23, CR24-31, CR32-39 and CR40-47 respectively. The cathodes of emitters CR7, CR15, CR23, CR31, CR39 and

CR47 are connected to the collector terminal of one of the Darlington transistor pairs of U8 which is also a Darlington transistor array with the base terminal associated with this Darlington transistor pair being connected to terminal 7 of U5, a BCD-to-decimal decoder. Similarly, the cathodes of emitters CR6, CR14, CR22, CR30, CR38 and CR46 are connected to the collector terminal of another Darlington transistor pair of component U8 with the base terminal associated therewith being connected to output pin 6 of decoder U5. The cathodes of emitters CR5, CR13, CR21, CR29, CR37, and CR45 are connected to the collector terminal of a Darlington transistor pair of component U8 with the base terminal associated therewith being connected to pin 5 of decoder U5. The cathode terminals of emitters CR4, CR12, CR20, CR28, CR36 and CR44 are connected to the collector terminal of another Darlington transistor pair of array U8 with the base terminal associated therewith being connected to output pin 4 of decoder U5. The cathodes of emitters CR3, CR11, CR19, CR27, CR35 and CR43 are connected to the collector terminal of a Darlington transistor pair from component U9 which is another Darlington transistor array with the base terminal associated therewith being connected to output pin 3 of decoder U3. The cathodes of emitters CR2, CR10, CR18, CR26, CR34 and CR42 are similarly connected to a collector terminal of another Darlington transistor pair of array U9 with the base terminal associated therewith being connected to terminal 2 of decoder U5. The cathodes of emitters CR1, CR9, CR17, CR25, CR33 and CR41 are connected to the collector terminal of another Darlington transistor pair of array U9 with the base terminal associated therewith being connected to output pin 1 of decoder U5. The cathodes of emitters CR0, CR8, CR16, CR24, CR32 and CR40 are connected to the collector of another Darlington transistor pair contained in array U9 with the base terminal associated therewith being connected to output pin 0 of decoder U5. The emitter terminals and SUB terminals of array U8 are connected together and

thereafter to Gnd while, similarly, the emitter and SUB terminals of array U9 are also connected together and thereafter to Gnd. Accordingly, through the use of arrays U3, U4, U8 and U9, the emitters CR0 through CR47 are connected so as to form a matrix (the operation of which will be described more fully below).

Referring now to Figure 4, there is shown the detection and decoding circuitry associated with the detectors of the present invention. The I/O line PC0 is connected to the input of inverter C of component U1 while, similarly, I/O lines PC1 and PC2 are connected to the input of inverters D and E of component U1. This thereby produces PC0, PC1 and PC2 which is connected to terminals A, B and C respectively of decoder U5 (previously mentioned) as well as to terminals A, B and C respectively of binary coded decimal-to-decimal decoders U6 and U7. Port C I/O line PC3 is connected to the D terminal of decoder U7 while I/O terminal PC4 is connected to the D terminal of decoder U6. Analog-to-digital I/O line AN0 is connected to one terminal of the A resistors of transistor arrays R6 and R7 and thereafter to the collector terminals of the phototransistors or detectors Q0, Q1, Q2, Q3, Q4, Q5, Q6, Q7 and Q16, Q17, Q18, Q19, Q20, Q21, Q22, Q23. Digital I/O line AN1 is similarly connected to one terminal of the B resistors of resistor networks R6 and R7 and thereafter connected to the collectors of detectors Q8 through Q15 and Q24 through Q31. The digital I/O line AN2 is connected to one terminal of the C resistors of resistor networks R6 and R7 and thereafter to the collectors of the detectors Q32 through Q39. Similarly, the I/O line AN3 is connected to one terminal of the D resistors of the resistor networks R6 and R7 and thereafter to the collectors of detectors Q40 through Q47. The remaining terminals of resistors A, B, C and D of R6 are connected together and thereafter to Vcc while the remaining terminals of resistors A, B, C and D of resistor network R7 are similarly connected together and thereafter to Gnd. The output pin 0 of decoder U7 is connected to the emitter terminals of detectors Q0 and Q8 while similarly the

paired emitter terminals of detectors Q1 and Q9, Q2 and Q10, Q3 and Q11, Q4 and Q12, Q5 and Q13, Q6 and Q14, Q7 and Q15 are connected together and thereafter to terminals 1, 2, 3, 4, 5, 6 and 7 respectively of decoder U7. Additionally, the emitters of detectors Q16 and Q24 and Q32 and Q40 are connected together thereafter being connected to terminal 0 of decoder U6 while, similarly, the four emitters from detectors Q17 and Q25 and Q33 and Q41, Q18 and Q26 and Q34 and Q42, Q19 and Q27 and Q35 and Q43, Q20 and Q28 and Q36 and Q44, Q21 and Q29 and Q37 and Q45, Q22 and Q30 and Q38 and Q46, Q23 and Q31 and Q39 and Q47 are connected together and thereafter to terminals 1, 2, 3, 4, 5, 6 and 7 respectively of decoder U6. This thereby creates a matrixing scheme similar to that of the detectors of Figure 3.

Referring now to Figure 5 there is illustrated a diagrammatic representation of an opto-matrix frame and bezel. Shown are emitters CR0 through CR47 and detectors Q0 through Q47 which comprise a 16x32 matrix with 16 emitters and detectors in the Y or vertical direction and 32 emitters and detectors in the X or horizontal direction. It is to be understood that although not shown the emitters and detectors are fixedly mounted on a printed circuit board or the like for properly holding and aligning an emitter/detector pair. Also diagrammatically illustrated is the light pattern produced by an emitter and which is received by a detector. Each emitter when energized, from a diagrammatic standpoint, can be said to produce a principal light beam pattern shown generally at 22 with non-collimated light 24 dispersing further and further apart, the more distant the detector is from the emitter. This therefore causes detectors adjacent the light received by the principal light beam 22 to register some light and which must be compensated for as will be discussed more fully below. Further, when emitters such as CR0 and CR4 are adjacent the corner and thereby the bezel 20, non-collimated light 24 will have a tendency to bounce off the bezel 20. This bounced light

produces a reflected beam shown generally at 26 with the result that some of the reflected beams 26 are received by the detector which is the object of the principal light beam 22. Therefore, should a stylus be introduced into the display area 12 and which does in fact block the principal light beam 22, some non-collimated light 24 via the reflected beams 26 is received by an associated detector such as Q0 with the result that, under certain light conditions, sufficient light is received by the detector such that a hit by a stylus is not registered as such. This problem of reflected light or glare becomes less and less prevalent as the detectors towards the center of the CRT are utilized. Due to manufacturing efficiencies, the same detectors and emitters are utilized near the corners of the bezel 20 as near the center. Accordingly it has been found that, by reducing the power and thereby light output for four emitters adjacent each corner of the bezel 20, the power of the reflected beams is reduced to an acceptable non-error-producing level. Accordingly, by reducing the power to emitters CR0, CR1, CR2, CR3, CR4, CR5, CR6, and CR7 to one level of reduced power and reducing power to emitters CR8, CR9, CR10, CR11, CR12, CR13, CR14 and CR15 to a second level of power, light output may be decreased adjacent the corners of the bezel for the first two emitters, slightly increased for the next two emitters and is at full power for the rest of the opto-matrix frame. It is to be understood, however, that more or less numbers of emitters may be given reduced power or that the detectors may similarly be treated without departing from the spirit and scope of the present invention.

Referring now to Figures 2, 3 and 4, the overall electrical operation of the present invention will be discussed. It is to be remembered that the present invention interacts with a host computer (not shown) which allows a CRT to present information over a video display area 12 which is part of an interactive relationship between the operator 16 and a program or operation such that the opto-matrix touch input screen designates operator

decisions to the host computer. It is submitted that the host computer and the programs used with it are within the scope of one skilled in the art and therefore are not discussed in detail below. The host computer introduces a clock signal to the clock terminal of Figure 1, which is received by the C port I/O line PC5 and the interrupt terminal of the microprocessor U2. This clock stream produced by the host computer continues for as long as input from the opto-matrix frame may be desired with the result that upon the absence of a clock signal, an interrupt is initiated in the microprocessor U2. Accordingly, upon appropriate power up and the presence of clock signals to the microprocessor U2, the opto-matrix device begins a scan-type of sequence which causes the LED's to be fired, phototransistors to be read, and internal analysis of the information by appropriate software. Since the operation of the present device is cyclical in nature, a signal cycle will be discussed by way of example, although it is to be understood that the remainder of the devices perform in the same manner.

Upon power up of the microprocessor U2, a main program loop is initiated in software (Figures 6 through 11). It is submitted that the flow chart diagrams illustrated in Figures 6 through 11 taken together with the description of the preferred embodiment herewith are sufficient so as to enable one skilled in the art to write the appropriate software. This starts with the initialization of the pointers at 100, which thereby begins the X and Y beam count at a known start point of zero. Thereafter, the microprocessor waits for a preset number of synchronizing clock pulses at 110 which are received from the host computer thereby insuring complete synchronization between the microcomputer U2 and the host computer. An X phototransistor at 120 is then turned on which would be Q4 (Figure 5) as the start of the initial cycle in the present example. This turning on of the phototransistor allows the transistor to settle down or stabilize. This is accomplished by selecting the appropriate address for I/O lines PC0, PC1 and PC2 which are presented to

decoder U7 which is then enabled by I/O line PC3 which thereby allows current to flow through Q4. The LED CR4 is then fired by energization of I/O line PB0 in conjunction with the address presented by PC0, PC1 and PC2 along with the enabling I/O line PB7 which thereby enables line 4 of decoder U5. This firing of the X LED CR4 at 130 also takes into account a wait period so as to insure that the LED CR4 is completely turned on. Further, for LED's CR0 through CR7 a current-limiting resistor R10 is utilized in conjunction with the Darlington transistor array U3 (used as a source driver) which allows current to flow through emitter CR0 through CR7 at a decreased brightness. Similarly, for emitters CR8 through CR15, a second current-limiting resistor R9 is also utilized so as to diminish the light output of the associated emitters. The value of R9 is preferably one-half of R10 thereby firing the two emitters adjacent each corner of the bezel 20 (Figure 5) at a brightness which is slightly less than the next two adjacent emitters. The remainder of the emitters which are driven by Darlington transistor array U4 do not utilize such current-limiting resistors since full brightness or maximum optical power output is desirable. In this manner, and as previously mentioned, a power profiling is accomplished such that for example, emitters CR0 and 1 have a reduced optical output power which thereby reduces the reflected beams 26 with CR8 and 9 having a slightly greater optical power but still less than the remainder of the emitters not adjacent the corners of the bezel 20. Resistor array R3 is provided as a pull up resistor network to insure that each emitter has minimum proper power for firing. Accordingly, when CR4 is fired, current is caused to flow through the emitter of the lower Darlington transistor pair of array U3 which thereby drives a collector of Darlington transistor array U8 (used as a sink driver) such that the emitter is actively driven and the Darlington transistor array U8 and U9 are actively driven. After the LED CR4 is completely turned on a conversion is started at 140 which in this example dictates that analog-to-digital line AN0 takes the value produced

by Q4 and starts to convert this value to a digital number. This digital number is determined by a reference value which is controlled by the reference divider of Vrh contained on the microprocessor U2 with all signal voltages being ratiometrically converted relative to this reference. It has been determined that this Vrh reference value should be set to Vq where Vq is the maximum voltage input and corresponds to a deselected phototransistor or to a selected phototransistor with an extremely low ambient light level. Resistor networks R6 and R7 determine the Vq maximum reference level. During the digital conversion process at 140, the LED CR4 is turned off at 150 with the digital conversion then completed and read and stored in the microprocessor at 160. With the LED CR4 off, another reading is taken of the phototransistor Q4 which results in a ambient light reading at 170 which is then started to be converted to a digital number at 180. Thereafter a count check is utilized at 190 to determine if there are any more Y's or Y phototransistors to interrogate. This is done since X and Y phototransistors are sampled alternately and since there are less devices in the Y direction than the X, for the purpose of expeditious processing, when the maximum number of Y devices have been sampled, the remainder of the X devices are sampled starting at 440 and described more fully below.. Accordingly, in the present example there are more Y phototransistors to be sampled with the result that Y phototransistor Q0 is turned on at 200. Thereafter at 210 the ambient conversion of the X phototransistor Q4 which was read at 170 is completed with the ambient value subtracted out at 220. This therefore compares the read converted value at 160, which is the fired LED CR4 value, with the read ambient value at 170 where CR4 was off, subtracting the two and determining at 230 whether phototransistor Q4 is saturated. If Q4 is not saturated which would tend to indicate that a hit is present or something is blocking light from detector Q4 then a NO condition exists at 240 which is presented at 260. A comparison is then made which

compares the value presented with a previously calculated and stored threshold level from 320 or 330 to determine whether the light beam is to be considered as broken or non-broken at 280 and 290 respectively. If the light beam was non-broken then a new threshold is calculated at 320. In the presence of a broken condition, a flag representing (in the present example) X4 broken is presented at 340. The new threshold and flag condition at 320 and 340 are thereafter presented as data at 350. Alternately, at 230 if a saturated condition exists, this is presented at 250 as a YES condition which is then given to 270 which is compared against a predetermined fixed minimum threshold value. If this value is less than the fixed minimum number, it is at 300 then considered as a broken flag condition which is presented to 340 and thereafter to 350. If the comparison at 270 determines that the difference is greater than or equal to a present threshold level, this is presented via 310 to 330 which calculates a new threshold level (for use at 260) which is in turn presented to 350 as a non-broken or non-hit condition. The new threshold value is computed at 320 or 330 and used by 260 as the threshold for comparison purposes. Accordingly, in this manner a continuous and dynamic sampling of ambient light is utilized and taken into account. Further, device degradation which generally occurs over a considerable period of time and which results in decreased sensitivity by the phototransistor or decreased light output by the emitter is automatically taken into account since, within predetermined absolute minimums and maximums, new thresholds are continuously calculated and utilized.

Processing of the Y axes is then started at 360 in a manner very similar to that of the X axes. This results in the Y LED CR0 being fired for a sufficiently long duration of time at 370 to insure complete LED turn-on with a digital conversion of Q0 started at 380. This conversion at 380 is possible since the Y sensor Q4 was turned on at 200. This seemingly early sampling of Q0 is done since the crystal which determines the frequency

at which the microprocessor U2 runs is substantially greater than the clock rate or the data output rate (discussed below). Thereafter LED CR0 is turned off at 390 with the value received by Q0 read when the conversion is complete at 400. Upon completion of the conversion the ambient value of Q0 is determined at 410 with the conversion to a digital number started at 420. Immediately after the start of the digital conversion at 420, the next X sensor which is Q5 is turned on at 450. During the Q5 turn on period the ambient converted value Q0 is read when completed at 460 with the ambient value being subtracted out from the value determined during the firing of LED CR0 at 470. This value is then presented to 480 to determine whether detector Q0 is saturated at 480 with a NO or YES condition being presented to 490 or 500 respectively. Similarly, minimum thresholds are analyzed at 510 and 520. After the comparison at 510, a broken or non-broken condition is determined at 530 and 540 with a broken Y0 flag broken indication at 590 if a broken condition does exist or a new threshold being calculated at 570 if a non-broken condition exists. Again the flag condition and new threshold from 590 and 570 respectively are used to supply Y0 data at 600. The comparison made at 520 is presented by 550 as a flag at 590 if a less than minimum threshold condition exists or at 560 if a new threshold is to be calculated at 580. Thereafter, the new threshold level is calculated at 580 with this value and a non-broken condition supplied to 600. At this point a processing of an X coordinate emitter/detector pair is initiated at 610 and presented as 620 to begin again at block 130 which fires the next X LED CR5 with a repetition of the processing as mentioned for Figures 6 through 9. In this manner, toggling is accomplished between the X and Y axes until at box 190 it is determined that there are no more Y's to be interrogated which is then presented as a jump via 440 to box 625 which thereafter turns on the 17th X axis phototransistor, Q36. X axis LED CR36 is then fired at 630 with the process then continuing in a manner substantially identical to the previously discussed X and

Y axes processing. Thereafter at box 830 the X data is presented at 840 to 110 with the process then repeating as long as the host computer continues to send out a clock signal.

It is to be remembered that during this entire time frame the host computer upon receiving a synchronization signal from microprocessor U2 in a data stream (described more fully below) is required to know in advance the size of the touch input matrix and to keep track of the data stream so as to know which X and Y pair status is being given.

Accordingly, at 350, 600 and 830 data which represents an X or Y broken or non-broken status condition is presented onto the data line. Therefore, referring now to Figure 12 there can be seen a timing and data scheme for the present invention. Upon initialization and synchronization at 110 of Figure 6 four continuous ones are placed onto the data line for the host computer to receive. This thereby lets the host computer know that a synchronization frame has occurred and that the host computer should now start to count. Thereafter, the data is presented in 4-bit bytes with the first two bits always being zero and the third and fourth bits indicating broken or non-broken conditions for the X and Y axes respectively. If a broken condition does exist, then a 1 is placed onto the data line and if an unbroken condition exists, then a 0 is utilized. As an example, should a hit occur at the intersection of CR0 and CR4 and since these are the first X and Y pairs interrogated, the first 4-bit byte of data after synchronization will read (0011). However, had a hit occurred at the intersection of CR0 and CR5, then the first 4-bit byte would have contained (0001) and the second 4-bit byte would have contained (0010). For those frames where no Y axis detector is being interrogated, a 0 is preferably inserted as a false bit although a 1 may also be utilized. This 4-bit byte data stream is continued until all the X detectors have been interrogated with the microprocessor U2 sending out the 4-bit sync cycle at the end of the interrogation thereby indicating a new cycle or frame. Additionally, the

present device will allow for beam averaging, the disclosure of which may be found in U.S. Patent No. 4,267,443 "Photoelectric Input Apparatus", issued May 12, 1981 to Carroll et al, incorporated by reference herein, and which allows for a stylus between two emitters to be registered as a hit between two beams thereby effectively doubling the resolution or interpolation of the present system to a 32x64 matrix.

It is to be remembered that many variations of the present invention may be accomplished without departing from the spirit and scope of the present invention. For example, power profiling resistors may be placed on individual emitters or detectors or at the decoders rather than at the Darlington transistor arrays without departing from the spirit and scope of the present invention. Further, the program could be utilized in a different sequence without departing from the spirit and scope of the present invention. Also, other data streams may be utilized such as parallel output using additional I/O lines which are available or different types of serial data streams. Additionally, different types of arrays other than Darlington transistors may be utilized while different types of decoders may be used while other types of detectors such as photodiodes may be used. It is also to be remembered that the firing or detection order of the emitters and detectors may be changed to any order desired. The present device may also be used with or without a display or a CRT or with a flat panel display.

Accordingly, the present invention produces a device which accommodates for changing ambient light levels, emitter and/or detector degradation and which has few components.

CLAIMS:

1. A touch input device having a light beam matrix consisting of an opto-matrix frame having a plurality of optical emitters (CR) and oppositely positioned optical detectors (Q) disposed in said opto-matrix frame and an optically transparent bezel (20) adjacent thereto, characterized in that:

the optical power of at least one emitter (CR0-CR7) and/or sensitivity of at least one detector (Q0-Q7) disposed adjacent corners of the optically transparent bezel (20) is decreased with respect to the remainder of the emitters and detectors thereby minimizing the effects of reflected radiant energy (26).

2. A device according to claim 1 further characterized in that the light beam matrix utilizes infrared light.

3. A device according to claim 1 further characterized in that said touch input device is disposed adjacent a cathode ray tube (12) or a flat panel display (12).

4. A touch input device for detecting at least one passive styli (18), characterized by:

a plurality of optical emitters (CR), electrically interconnected in a matrix such that the anodes form one side of the matrix and the cathodes form the other side of said matrix;

a plurality of optical detectors (Q), electrically interconnected in a matrix such that the anodes or the like form one side of the matrix and the cathodes or the like form the other side of said matrix;

first driving device (U3, U4, U8, U9) connected to the optical emitters for selectively energizing at least one emitter at a time;

first decoding or selection device (U6, U7) connected to the optical detectors for selectively energizing at least one detector at a time;

microcomputer (U2) interconnected to the first driving device and the first decoding or selection device so as to sequentially energize the first and second driving devices, wherein the microcomputer produces a data output signal (DATA)

which corresponds to the presence or absence of radiant energy received by one of the optical detectors coincident with the presence or absence of the passive styli.

5. A device according to claim 4 wherein said optical emitters (CR) and optical detectors (Q) are infrared emitters and infrared detectors respectively.

6. A device according to claim 4 wherein the first driving device (U3, U4, U8, U9) are Darlington transistor arrays interconnected with the anodes or the like and cathodes or the like of the emitters.

7. A device according to claim 4 wherein the first decoding or selection device (U6, U7) is a BCD-to-decimal converter interconnected with the anodes or the like and cathodes or the like of the detectors.

8. A touch input device for detecting at least one passive styli (18), comprising:

an opto-matrix frame having a plurality of optical emitters (CR) and oppositely positioned optical detectors (Q) disposed in the opto-matrix frame and having an optically transparent bezel (20) adjacent thereto, characterized in that:

the plurality of optical emitters (CR) are electrically interconnected in a matrix such that the anodes form one side of the matrix and the cathodes form the other side of said matrix;

the plurality of optical detectors (Q) are electrically interconnected in a matrix such that the anodes or the like form one side of the matrix and the cathodes or the like form the other side of said matrix;

a first driving device (U3, U4, U8, U9) is connected to the optical emitters for selectively energizing at least one emitter at a time;

a first decoding or selection device (U6, U7) is connected to the optical detectors for selectively energizing at least one detector at a time;

the optical power of at least one emitter (CR0-CR7) and/or sensitivity of at least one detector (Q0-Q7) disposed adjacent

corners of the optically transparent bezel is decreased with respect to the remainder of the emitters and detectors thereby minimizing the effects of reflected radiant energy (26); and

a microcomputer (U2) interconnected to the first driving device (U3, U4, U8, U9) and the first decoding or selection device (U6, U7) so as to sequentially energize the first and second driving devices, wherein the microcomputer produces a data output signal (DATA) which corresponds to the presence or absence of radiant energy received by one of the optical detectors coincident with the presence or absence of the passive styli.

9. A device according to claim 1 wherein the optical emitters (CR) are composed of light emitting diodes and the optical detectors (Q) are composed of phototransistors.

10. A device according to claim 8 wherein the optical emitters (CR) are composed of light emitting diodes and the optical detectors (Q) are composed of phototransistors.

11. A device according to claim 8 wherein said optical emitters (CR) and optical detectors are infrared emitters and infrared detectors respectively.

12. A device according to claim 8 wherein the first driving device (U3, U4, U8, U9) are Darlington transistor arrays interconnected with the anodes or the like and cathodes or the like of the emitters.

13. A device according to claim 8 wherein the first decoding or selection device (U6, U7) is a BCD-to-decimal converter interconnected with the anodes or the like and cathodes or the like of the detectors.

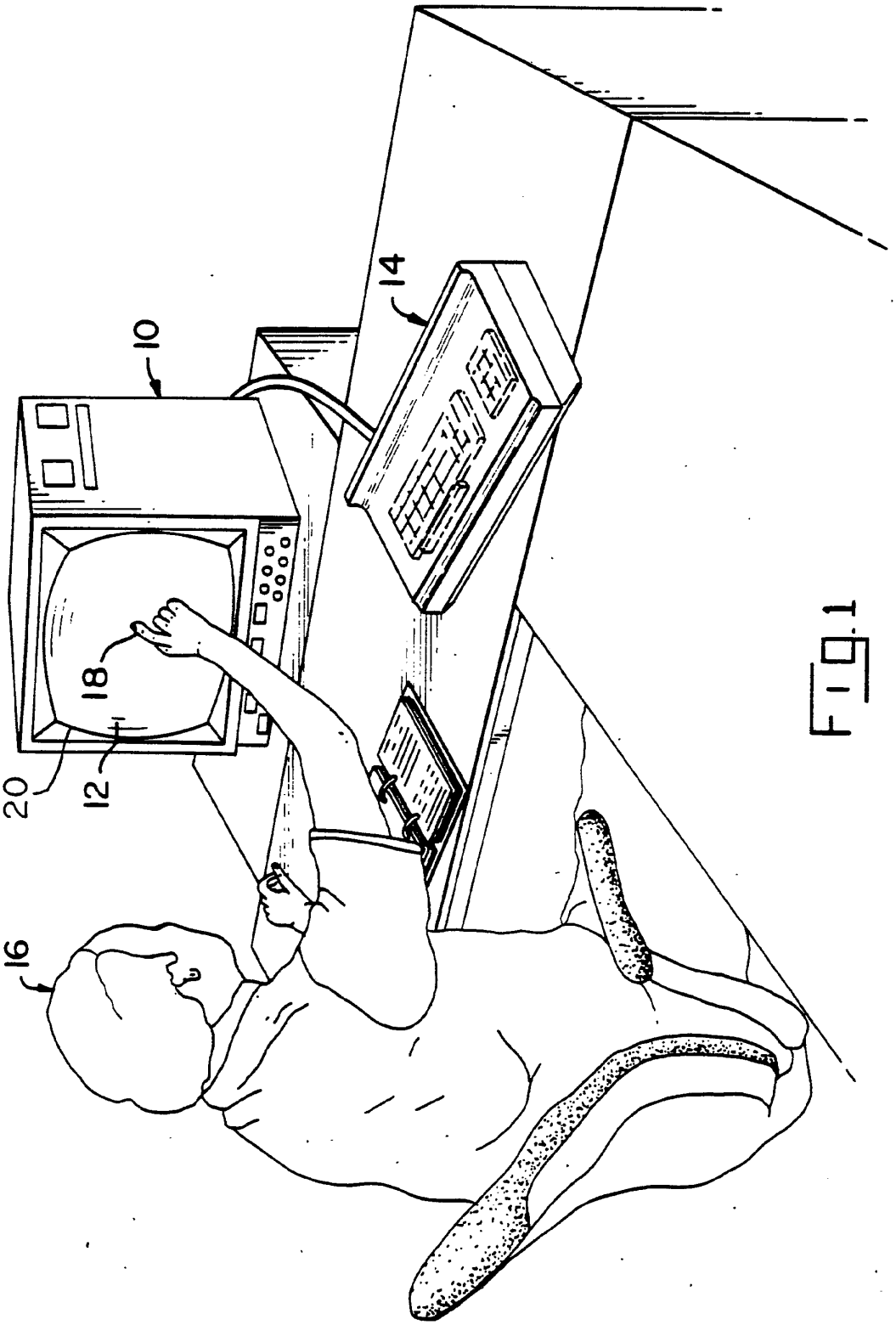

FIG. 1

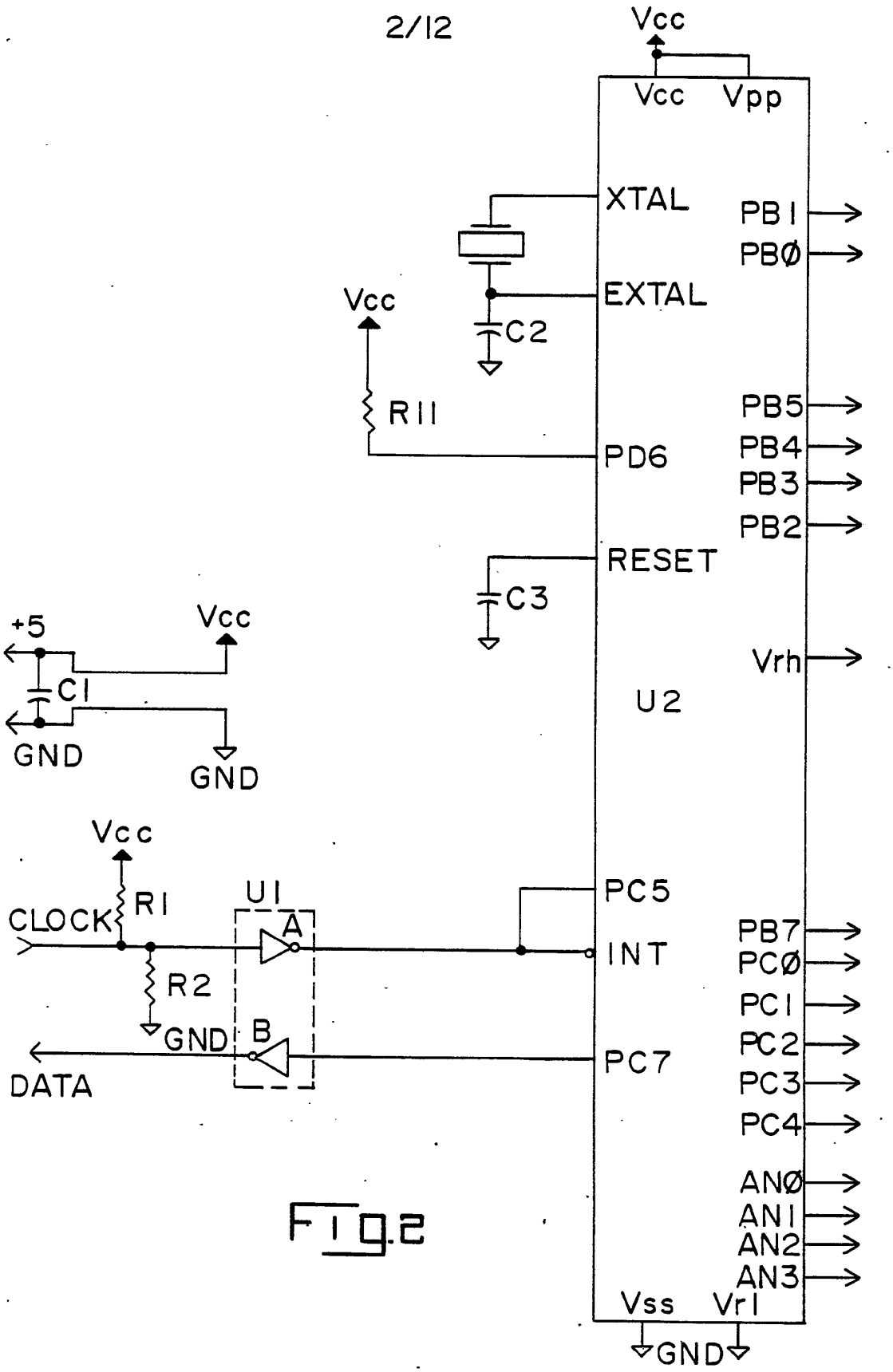
Vcc
Vcc
Vpp
XTAL
EXTAL
C2
Vcc
R11
PD6
RESET
C3
+5
Vcc
C1
GND
GND
Vrh
U2
Vcc
R1
CLOCK
U1
A
R2
GND
B
DATA
PC5
INT
PC7
PB1
PB0
PB5
PB4
PB3
PB2
PB7
PC0
PC1
PC2
PC3
PC4
AN0
AN1
AN2
AN3
Vss
Vrl
GND

Fig.2

FIG.3

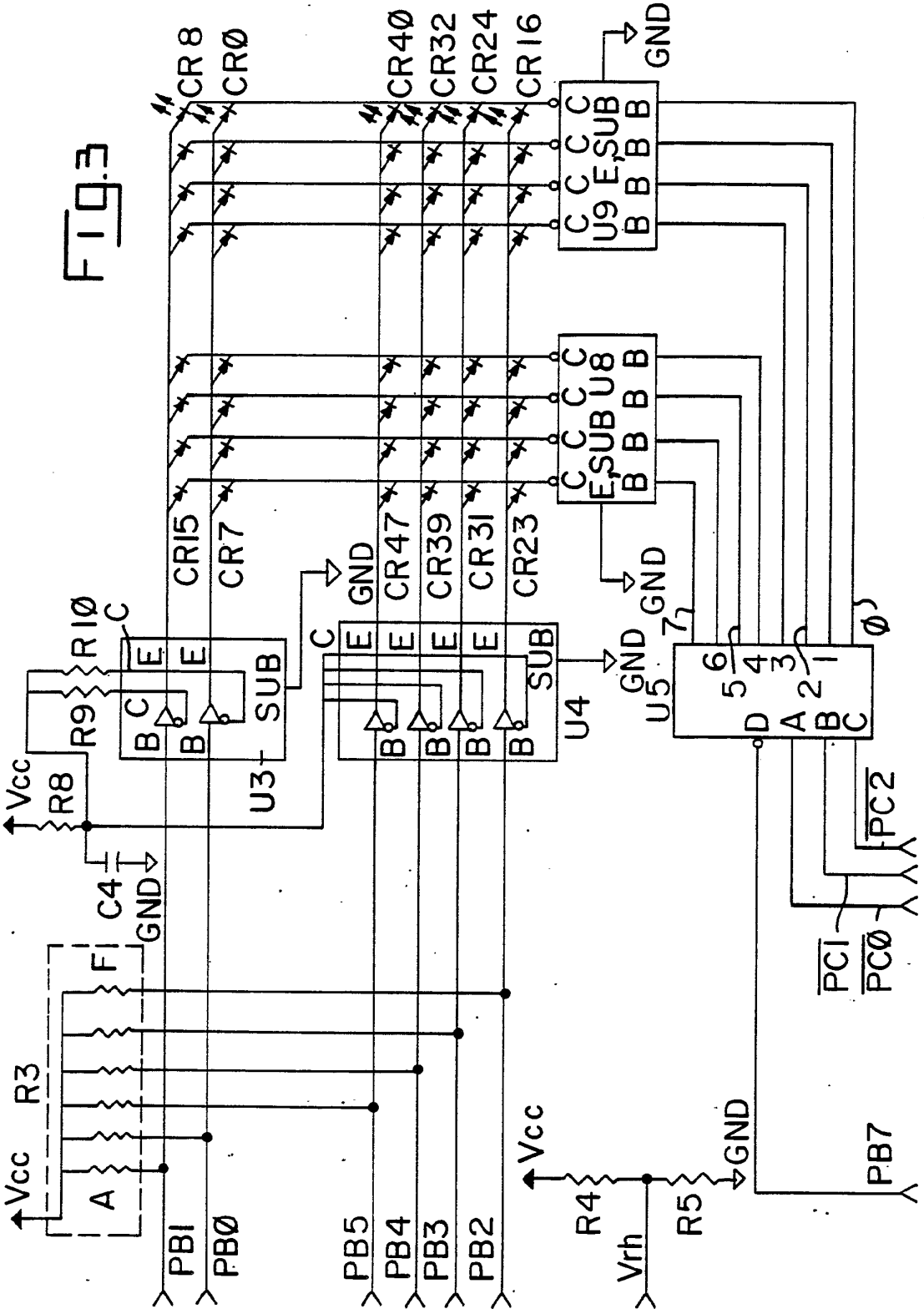
CR8
CR0
CR40
CR32
CR24
CR16
GND
U9
CR15
CR7
CR47
CR39
CR31
CR23
U8
R10
R9
R8
Vcc
C4
GND
U3
U4
U5
PC2
PC1
PC0
R3
A
PB1
PB0
PB5
PB4
PB3
PB2
R4
R5
Vrh
PB7

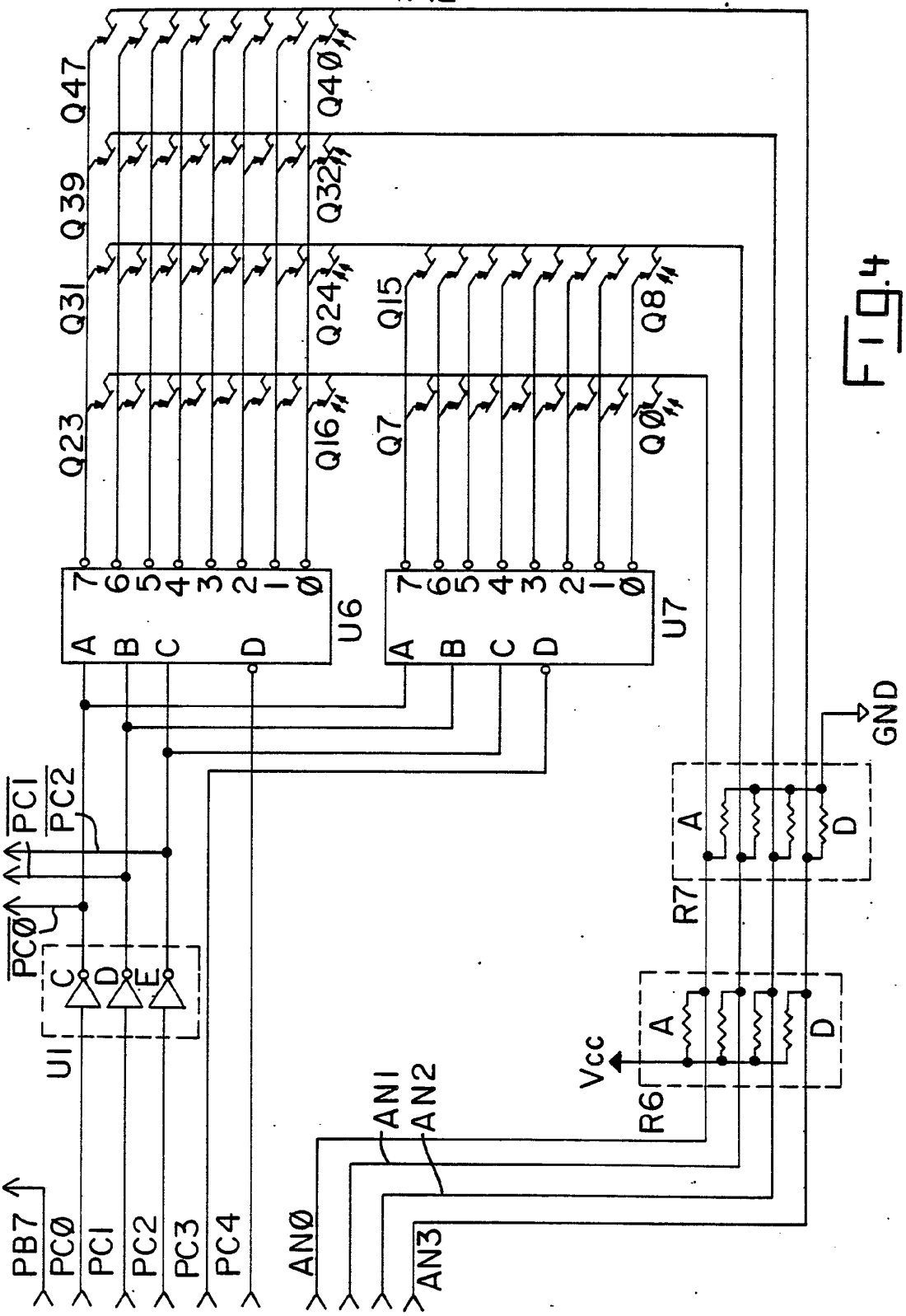
Q47
Q40
Q39
Q32
Q31
Q24
Q15
Q8
Q23
Q16
Q7
Q0
7 6 5 4 3 2 1 0
A B C D
U6
U7
GND
PC1
PC2
PC0
C D E
U1
R7
R6
A
D
Vcc
AN1
AN2
AN0
AN3
PB7
PC0
PC1
PC2
PC3
PC4

FIG. 4

FIG.5

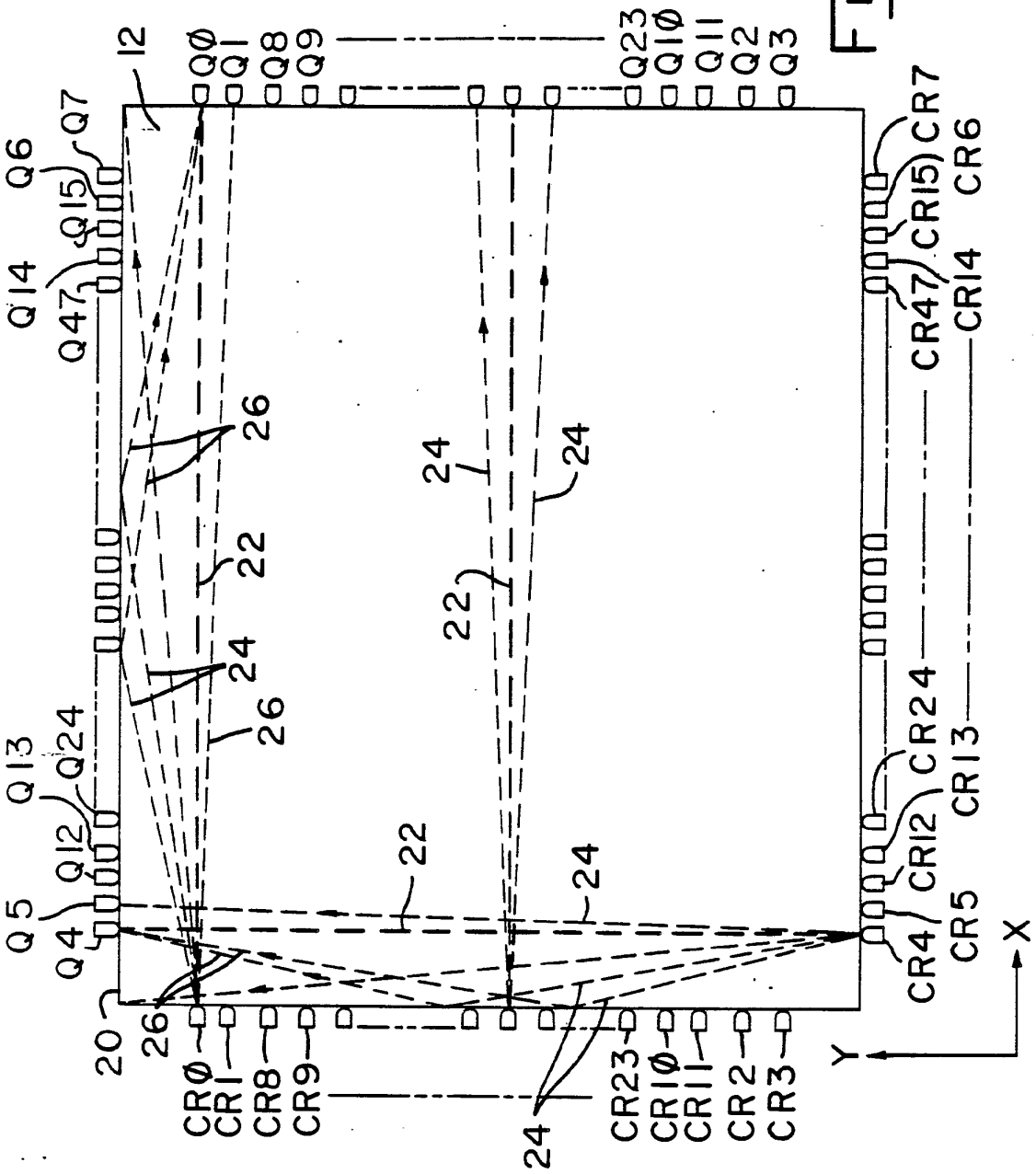
12
Q0
Q1
Q8
Q9
Q23
Q10
Q11
Q2
Q3
Q6
Q7
Q15
Q14
Q47
Q13
Q24
Q12
Q5
Q4
20
26
22
24
CR0
CR1
CR8
CR9
CR23
CR10
CR11
CR2
CR3
CR7
CR15
CR6
CR47
CR14
CR24
CR13
CR12
CR5
CR4
X
Y

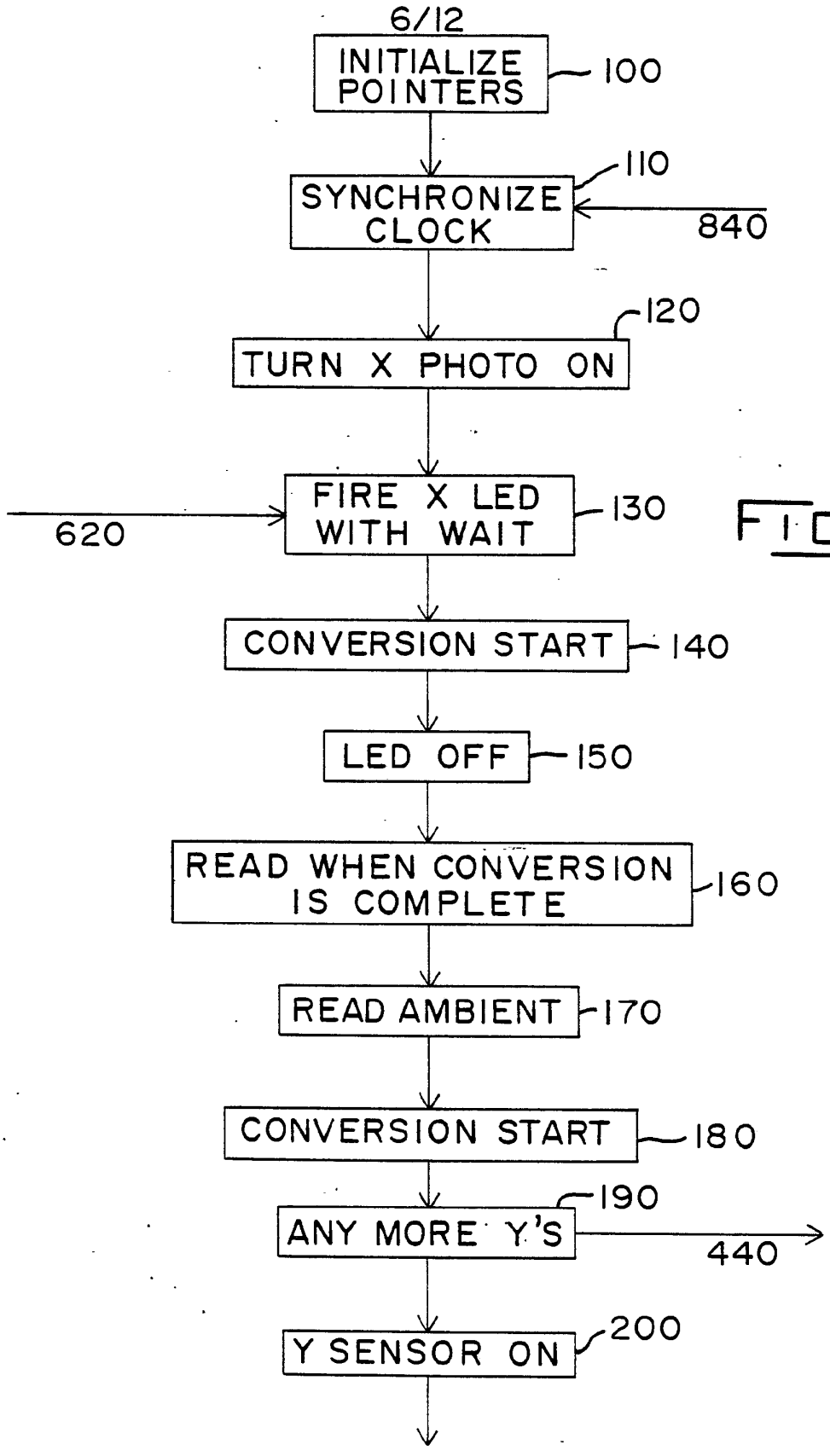
INITIALIZE POINTERS
100
SYNCHRONIZE CLOCK
110
840
TURN X PHOTO ON
120
620
FIRE X LED WITH WAIT
130
CONVERSION START
140
LED OFF
150
READ WHEN CONVERSION IS COMPLETE
160
READ AMBIENT
170
CONVERSION START
180
ANY MORE Y'S
190
440
Y SENSOR ON
200

FIG.6

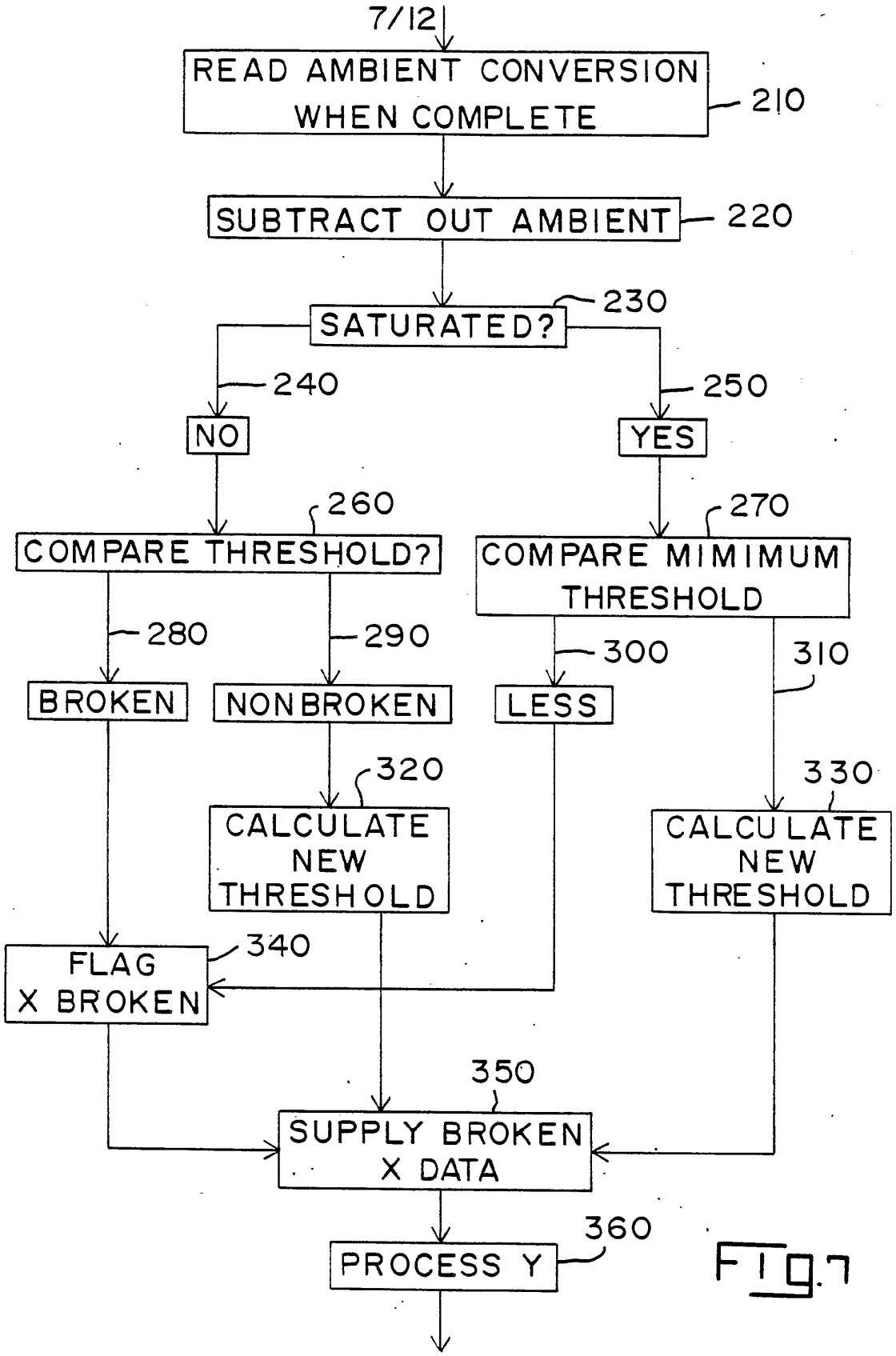
7/12
READ AMBIENT CONVERSION WHEN COMPLETE
210
SUBTRACT OUT AMBIENT
220
SATURATED?
230
240
NO
250
YES
260
COMPARE THRESHOLD?
270
COMPARE MIMIMUM THRESHOLD
280
290
300
310
BROKEN
NONBROKEN
LESS
320
330
CALCULATE NEW THRESHOLD
CALCULATE NEW THRESHOLD
FLAG X BROKEN
340
350
SUPPLY BROKEN X DATA
360
PROCESS Y

FIG.7

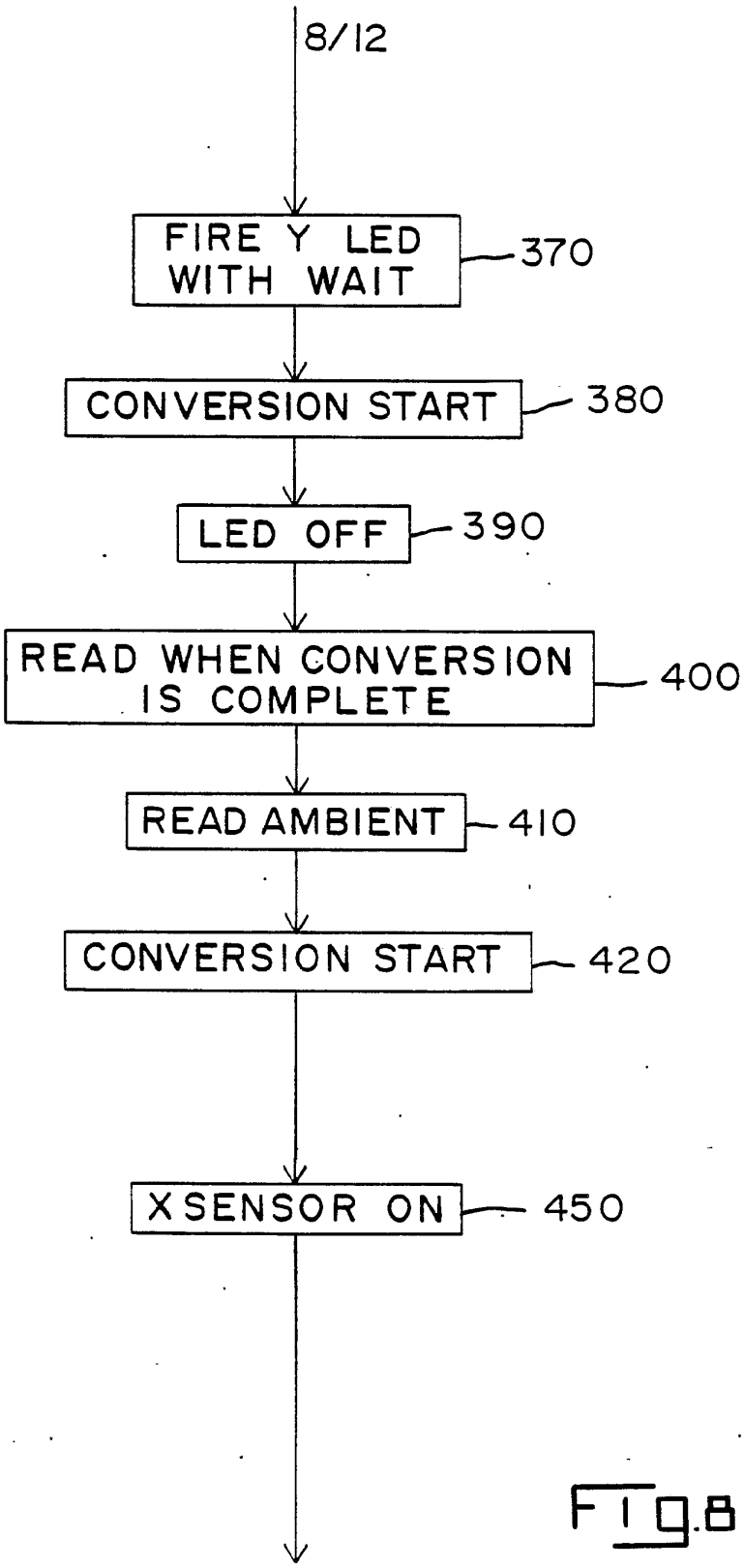
FIRE Y LED WITH WAIT
370
CONVERSION START
380
LED OFF
390
READ WHEN CONVERSION IS COMPLETE
400
READ AMBIENT
410
CONVERSION START
420
XSENSOR ON
450

Fig.8

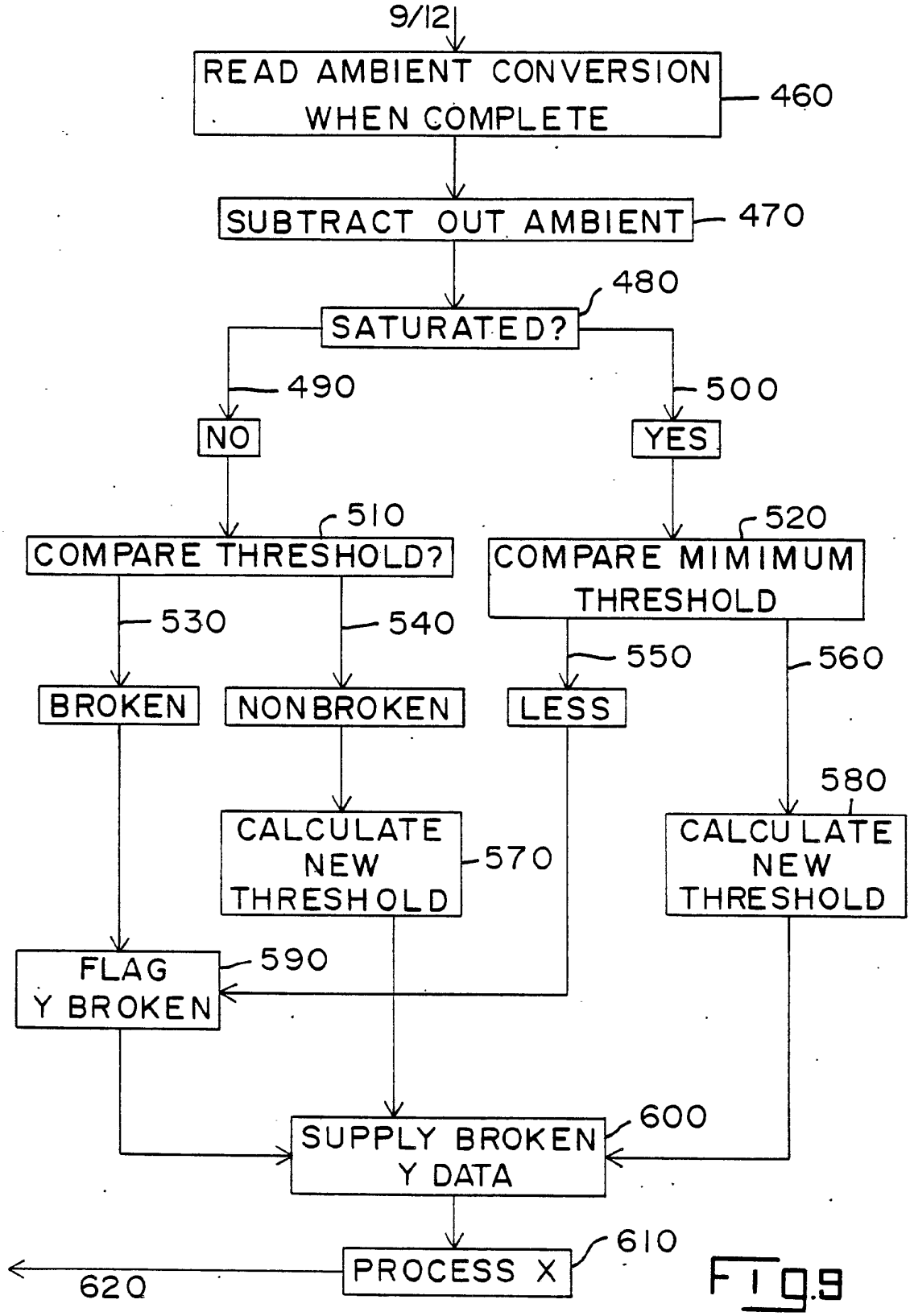
9/12
READ AMBIENT CONVERSION WHEN COMPLETE
460
SUBTRACT OUT AMBIENT
470
480
SATURATED?
490
500
NO
YES
510
520
COMPARE THRESHOLD?
COMPARE MIMIMUM THRESHOLD
530
540
550
560
BROKEN
NONBROKEN
LESS
580
CALCULATE NEW THRESHOLD
570
CALCULATE NEW THRESHOLD
FLAG Y BROKEN
590
600
SUPPLY BROKEN Y DATA
610
PROCESS X
620

FIG.9

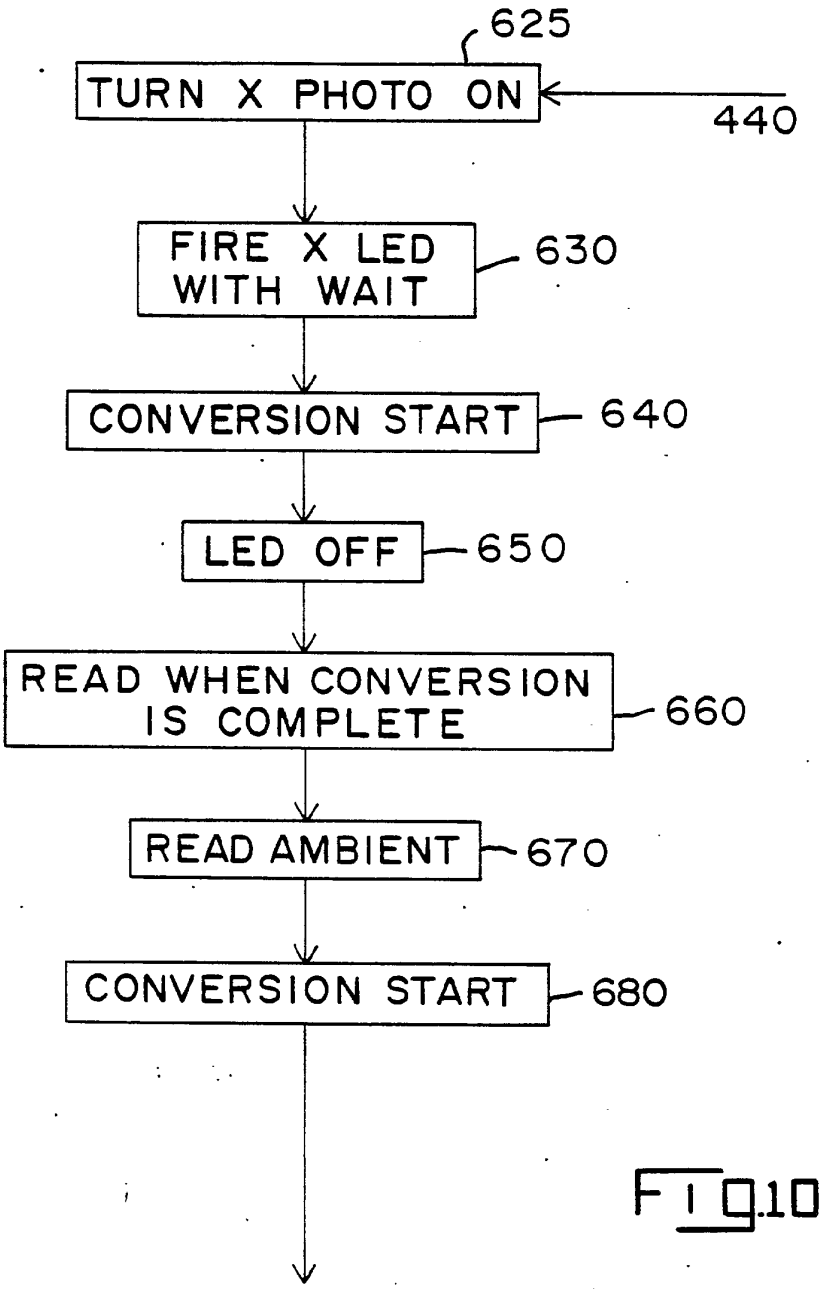
625
TURN X PHOTO ON
440
FIRE X LED WITH WAIT
630
CONVERSION START
640
LED OFF
650
READ WHEN CONVERSION IS COMPLETE
660
READ AMBIENT
670
CONVERSION START
680

FIG.10

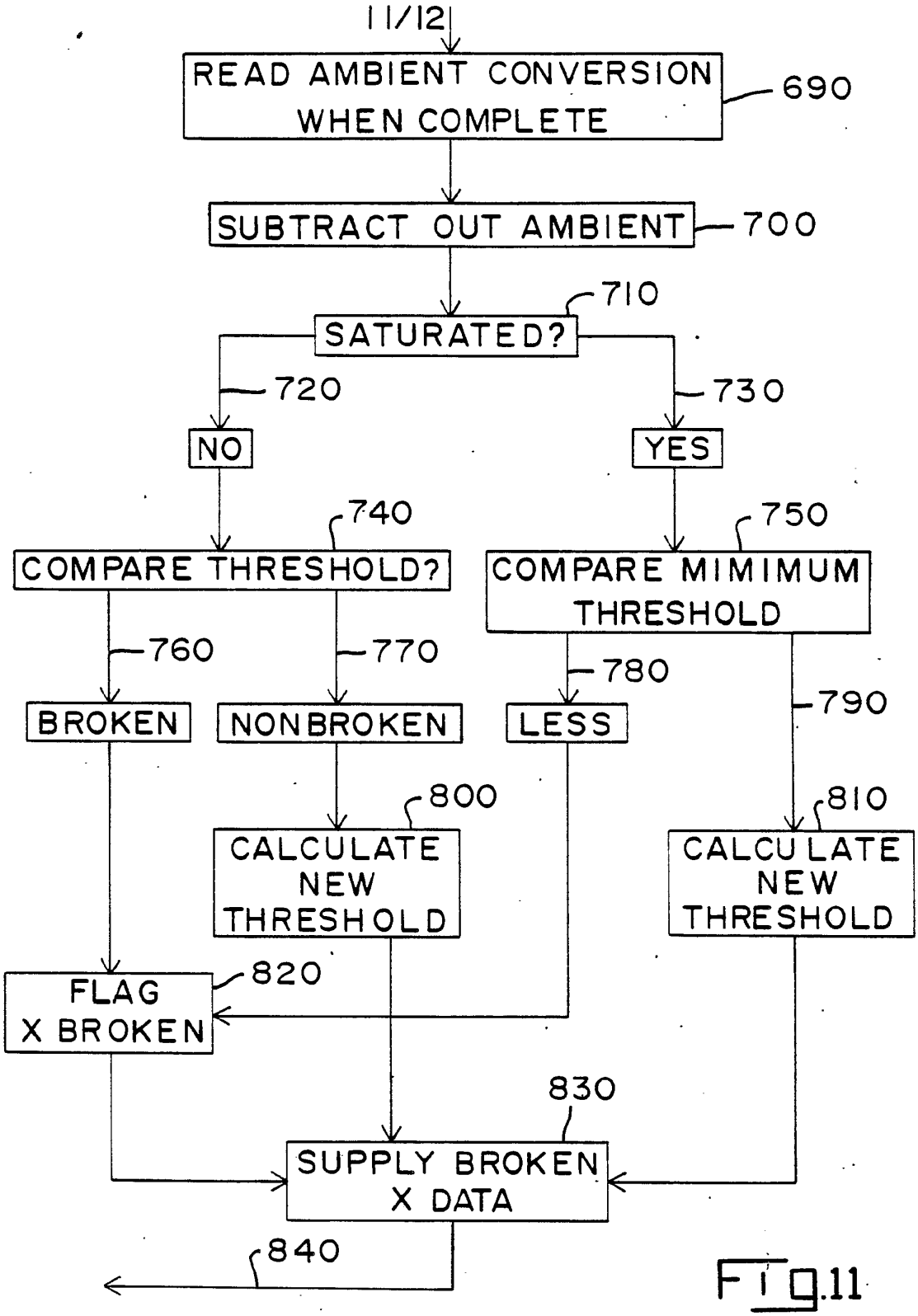
11/12
READ AMBIENT CONVERSION WHEN COMPLETE
690
SUBTRACT OUT AMBIENT
700
SATURATED?
710
720
730
NO
YES
740
750
COMPARE THRESHOLD?
COMPARE MIMIMUM THRESHOLD
760
770
780
790
BROKEN
NONBROKEN
LESS
800
810
CALCULATE NEW THRESHOLD
CALCULATE NEW THRESHOLD
FLAG X BROKEN
820
830
SUPPLY BROKEN X DATA
840

Fig.11

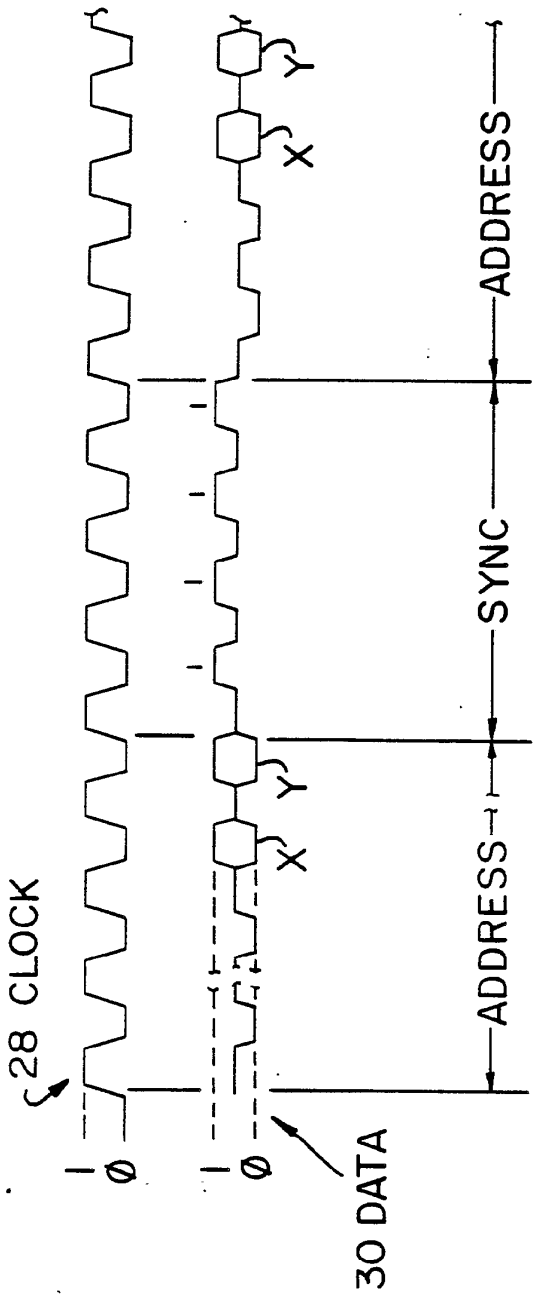

FIG.12

INTERNATIONAL SEARCH REPORT

International Application No PCT/US 85/00922

I. CLASSIFICATION OF SUBJECT MATTER (if several classification symbols apply, indicate all) [6]

According to International Patent Classification (IPC) or to both National Classification and IPC

IPC[4]: G 06 K 11/06

II. FIELDS SEARCHED

Minimum Documentation Searched [7]

Classification System	Classification Symbols
IPC[4]	G 06 K 11/06

Documentation Searched other than Minimum Documentation to the Extent that such Documents are Included in the Fields Searched [8]

III. DOCUMENTS CONSIDERED TO BE RELEVANT [9]

Category [10]	Citation of Document, [11] with indication, where appropriate, of the relevant passages [12]	Relevant to Claim No. [13]
X	US, A, 3860754 (JOHNSON et al.) 14 January 1975, see column 4, line 40 - column 5, line 20; figures 2,3; column 2, lines 37-45	4,5
A	--	2,3,8,10,11
A	US, A, 3764813 (CLEMENT et al.) 9 October 1973, (cited in the application)	
A	US, A, 4243879 (CARROLL et al.) 6 January 1981, see abstract (cited in the application)	1,8,9

------

* Special categories of cited documents: [10]

"A" document defining the general state of the art which is not considered to be of particular relevance

"E" earlier document but published on or after the international filing date

"L" document which may throw doubts on priority claim(s) or which is cited to establish the publication date of another citation or other special reason (as specified)

"O" document referring to an oral disclosure, use, exhibition or other means

"P" document published prior to the international filing date but later than the priority date claimed

"T" later document published after the international filing date or priority date and not in conflict with the application but cited to understand the principle or theory underlying the invention

"X" document of particular relevance; the claimed invention cannot be considered novel or cannot be considered to involve an inventive step

"Y" document of particular relevance; the claimed invention cannot be considered to involve an inventive step when the document is combined with one or more other such documents, such combination being obvious to a person skilled in the art.

"&" document member of the same patent family

IV. CERTIFICATION

Date of the Actual Completion of the International Search	Date of Mailing of this International Search Report
29th August 1985	27 SEP 1985
International Searching Authority	**Signature of Authorized Officer**
EUROPEAN PATENT OFFICE	G.L.M. Kruydenberg

Form PCT/ISA/210 (second sheet) (January 1985)

ANNEX TO THE INTERNATIONAL SEARCH REPORT ON

INTERNATIONAL APPLICATION NO. PCT/US 85/00922 (SA 9742)

This Annex lists the patent family members relating to the patent documents cited in the above-mentioned international search report. The members are as contained in the European Patent Office EDP file on 13/09/85

The European Patent Office is in no way liable for these particulars which are merely given for the purpose of information.

Patent document cited in search report	Publication date	Patent family member(s)	Publication date
US-A- 3860754	14/01/75	DE-A,C 2403270 JP-A- 50011330	28/11/74 05/02/75
US-A- 3764813	09/10/73	None	
US-A- 4243879	06/01/81	US-A- 4201295	06/05/80

For more details about this annex :
see Official Journal of the European Patent Office, No. 12/82

PCT WORLD INTELLECTUAL PROPERTY ORGANIZATION
International Bureau

INTERNATIONAL APPLICATION PUBLISHED UNDER THE PATENT COOPERATION TREATY (PCT)

(51) International Patent Classification 4 : G06K 11/06	A1	**(11) International Publication Number:** WO 86/ 00447 **(43) International Publication Date:** 16 January 1986 (16.01.86)

(21) International Application Number: PCT/US85/00923
(22) International Filing Date: 20 May 1985 (20.05.85)
(31) Priority Application Number: 621,585
(32) Priority Date: 18 June 1984 (18.06.84)
(33) Priority Country: US

(71) Applicant: AMP INCORPORATED [US/US]; P.O. Box 3608, Harrisburg, PA 17105 (US).

(72) Inventors: CARSTEDT, John, Keith ; 1300 Oakridge Drive, Round Rock, TX 78664 (US). GARRETT, James, Edward ; 715 South Prairie Street, Champaign, IL 61820 (US). LUCAS, Paul, Barkley ; 1504 Rutledge Drive, Urbana, IL 61801 (US). MASTERS, Timothy, Elton ; 908 Alagna Street, Champaign, IL 61821 (US).

(74) Agents: SEITCHIK, Jay, L. et al.; AMP Incorporated, P.O. Box 3608, Harrisburg, PA 17105 (US).

(81) Designated States: AT (European patent), BE (European patent), CH (European patent), DE (European patent), FR (European patent), GB (European patent), IT (European patent), JP, KR, LU (European patent), NL (European patent), SE (European patent).

Published
With international search report.

(54) Title: TOUCH INPUT DEVICE HAVING DIGITAL AMBIENT LIGHT SAMPLING

(57) Abstract

A touch input device which continuously samples and digitally stores ambient light readings and compares these with previously stored readings is taught. Briefly stated, a phototransistor (Q) is turned on before, during and after an LED (CR) emitter energization. A digital ambient value (210, 460, 690) is calculated which is subtracted (220, 470, 700) from the value obtained during LED firing (130, 370, 630) so as to develop a signal indicative of the presence or absence of the LED pulse, irrespective of ambient light fluctuations. The ambient level is stored for comparison purposes (270, 520, 750) during the next sampling of the associated phototransistor/emitter pair.

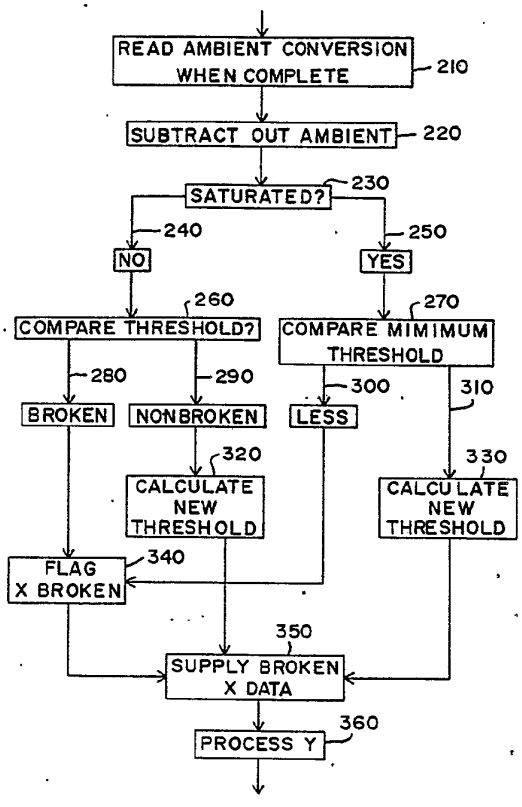

FOR THE PURPOSES OF INFORMATION ONLY

Codes used to identify States party to the PCT on the front pages of pamphlets publishing international applications under the PCT.

AT	Austria
AU	Australia
BB	Barbados
BE	Belgium
BG	Bulgaria
BR	Brazil
CF	Central African Republic
CG	Congo
CH	Switzerland
CM	Cameroon
DE	Germany, Federal Republic of
DK	Denmark
FI	Finland
FR	France
GA	Gabon
GB	United Kingdom
HU	Hungary
IT	Italy
JP	Japan
KP	Democratic People's Republic of Korea
KR	Republic of Korea
LI	Liechtenstein
LK	Sri Lanka
LU	Luxembourg
MC	Monaco
MG	Madagascar
ML	Mali
MR	Mauritania
MW	Malawi
NL	Netherlands
NO	Norway
RO	Romania
SD	Sudan
SE	Sweden
SN	Senegal
SU	Soviet Union
TD	Chad
TG	Togo
US	United States of America

TOUCH INPUT DEVICE HAVING DIGITAL AMBIENT LIGHT SAMPLING

The present invention is related to material disclosed in the following concurrently filed, copending U.S. patent application, which is assigned to the same assignee as the present invention, given Serial No. 621,586, "Touch Input Device Having Power Profiling" filed June 18, 1984.

The invention relates, generally, to a touch input device and, more particularly, to an opto-matrix frame having automatic corner glare compensation.

Coincident with the use of video displays has always been the problem of the man/machine interface. Traditionally, control of displayed information or cursors has been via a keyboard. Recently, however, a number of devices have been introduced which allow an operator to directly interact with the video display. These types of devices have included light pens, desk-type mouse controllers, or touch input devices such as a switch matrix or opto-electronic matrices. While generally switch-type overlays which are placed adjacent a video display are inexpensive to apply and utilize, they are generally susceptible to contact wear as well as distortion of the video information which is presented to the viewer, particularly in high usage environments. However, since opto-matrix schemes utilize light, which is generally in the infrared region, the switch matrix presented by the light beams is invisible to the viewer and, therefore, does not distort the video information displayed to the viewer and is not subject to wear in high usage environments. A number of schemes which utilize opto-matrix frames may be found in U.S. Patent No. 4,267,443 "Photoelectric Input Apparatus", issued May 12, 1981 to Carroll et al; U.S. Patent No. 4,243,879 "Touch Panel with Ambient Light Sampling", issued January 6, 1981 to Carroll et al; and U.S. Patent No. 3,764,813 "Coordinate Detection System", issued October 9, 1973 to Clement et al. These three schemes address problems inherent with opto-matrix devices such as increasing frame resolution without a corresponding increase in components,

surrounding or ambient light compensation, or optimization of emitter/detector driving and detecting networks respectively. These systems still have drawbacks in some areas such as large component usage thereby resulting in higher costs, ambient light sensing which is based on a predetermined value rather than dynamically, and difficulty in compensating for reflection or glare which may result in styli hits not being recorded.

Glare problems generally occur when an emitter is adjacent the corner of the frame or bezel such that light produced by the emitter bounces off an adjacent surface and is then detected by the detector such that any stylus which is introduced to the video display inherently blocks the majority of the light received by the detector but the reflectant light is sufficiently high for the detector and its associated circuitry to not perceive a hit. Accordingly, it is desirable to have a device which minimizes the number of components necessary for addressing and detecting emitters and detectors. Further, it is also desirable to have a device which dynamically compensates for ambient light and for variations in emitter output and detector sensitivity. Also, it is desirable to have a device which minimizes glare problems. Such a scheme is taught in the present invention.

It is a principal object of the invention to provide a touch input device having digital ambient light sampling, comprising an opto-matrix frame having optical emitters disposed in two adjacent sides of the frame, optical detectors disposed in the two sides of the frame opposite the emitters, characterized in that at least one driver is connected to the emitters for activating at least one emitter at a time, a decoding or selection device is electrically connected to the optical detectors for sequentially sampling the light received by the detectors, a digital converter is connected to the decoding device for converting the value of the light received by the detectors to a digital value, a processor is connected to the converter for sequentially comparing the digital value of the light received by a detector for the time frame prior to and/or during and after activation of

a corresponding emitter, thereby deriving a signal manifesting the average signal or level related to emitter output and detector reception pairs, wherein the signal is stored by the processor to be used as a comparison level for subsequent comparisons of the same emitter/detector pair and the interruption or noninterruption of the light by the emitter and introduced to the detector regardless of ambient or extraneous light.

Reference is now made to the accompanying drawings in which:

FIGURE 1 is a representative view of an operator utilizing a video display;

FIGURES 2, 3 and 4 form a complete schematic diagram for use in conjunction with the touch input entry device of the present invention;

FIGURE 5 is a representational view of glare produced by the frame surrounding the opto-matrix devices as well as a numbering assignment of the emitters and detectors of the present invention;

FIGURES 6 through 11 are flow chart diagrams for use with the preferred embodiment of the present invention; and

FIGURE 12 is a timing diagram of the data output for use with the present invention.

Referring now to Figure 1, there is illustrated a representative view of an operator utilizing a video display. Shown is a CRT 10 having a display area 12 and which generally interacts with a keypad or keyboard 14. An operator 16 interacts with the display area 12 through the use of the stylus 18, which in the preferred embodiment of the present invention, is the finger of the operator thereby presenting a truly touch-type interactive system. It is to be understood, however, that other types of styli can and may be used without departing from the spirit and scope of the present invention such as, for example, pencils, pointers, or other similar types of apparatus. While the keypad 14 is shown, it is one of the primary objects of the present invention to utilize the keypad 14 as little as

possible, if at all, with the operator 16 utilizing the stylus 18 for direct interaction with the CRT. A touch input area is generally defined by what the operator 16 sees in the display area 12. In the preferred embodiment of the present invention, this touch area utilizes emitters which are disposed on the bottom and one side of the display with detectors located on the top and opposite side thereby forming an infrared light beam matrix (shown more clearly in Figure 5). The light beams (not shown) shine through the bezel 20 which is disposed around the edge of the CRT 10 and which, in the preferred embodiment of the present invention, is opaque to visible light but transparent to infrared light. It is to be understood, however, that other types of bezels which exhibit different types of light transmission properties may be utilized.

Referring now to Figures 2, 3 and 4, there is illustrated a schematic for the present invention. A list of the major component designations and functions is shown in Table I below.

TABLE I

Component Number	Component Type
U1	Schmidt Trigger Inverter
U2	Microprocessor
U3, U4, U8, U9	Darlington Transistor Array
U5, U6, U7	BCD-to-Decimal Decoder
CR0-CR47	Light Emitting Diodes (Emitters)
Q0-Q47	Phototransistors (Detectors)

Also shown is a microprocessor U2 which, in the preferred embodiment of the present invention, is an 8-bit microcomputer having on-board analog-to-digital converter as well as RAM and ROM, and is an HMOS device preferably of the 6800 family of microcomputers produced by companies such a Motorola of Austin, Texas. It is to be understood, however, that other types of microcomputers can be utilized which may be CMOS or

NMOS and which have been produced by other manufacturers having different bit-byte configurations such as 16 or 32-bit bytes. These machines like the preferred 6800 family architecture are readily known and available to one skilled in the art. The design of the present invention does not require the use of all features and pins attendant to the U2 microprocessor and therefore only those utilized will be discussed and are shown. The Vcc terminal is connected to Vcc power which, in the preferred embodiment of the present invention, is +5 Volts and is also connected to terminal Vpp. Vcc supplies operating power to most of the microprocessor U2 while Vpp supplies the programming voltage for the ROM memory in the microprocessor U2 which, in the preferred embodiment of the present invention, is EPROM, although it is to be understood that masked versions of the microprocessor may be utilized with the result that Vpp is no longer necessary. The XTAL and EXTAL terminals have a crystal disposed therebetween with the EXTAL terminal having one terminal of capacitor C2 connected thereto with the remaining terminal of capacitor C2 connected to Ground (Gnd). This thereby provides a stabilized clock frequency for the entire system of the present invention. The RESET terminal is connected to one terminal of capacitor C3 with the remaining terminal of capacitor C3 also connected to Gnd. Terminal PC5, which is an I/O pin, is connected to the interrupt terminal INT and is connected to the output of the A inverter of device U1 which is a Schmidt-type trigger inverter with the input to inverter A of component U1 being connected to one terminal of R1 and one terminal of R2 as well as to the clock terminal which is thereafter provided by a host computer (not shown). The remaining terminals of R1 and R2 are connected to Vcc and Gnd respectively. The I/O pin PC7 is connected to the input of the B inverter of device U1 with the output of the B inverter of device U1 being a data output terminal which is also connected to a host computer (not shown). Also shown on Figure 2 is capacitor C1 which acts as a filtering capacitor and is connected

such that one terminal is attached to the +5 or Vcc bus with the other terminal attached to the Gnd bus. Port B I/O lines PB0, PB1, PB2, PB3, PB4, PB5 and PB7 provide coding and decoding for the emitters and detectors of the present invention as shown more clearly in Figures 3 and 4. Pin Vrh is a voltage reference high pin which provides the high voltage reference for the analog/digital conversion portion of the microprocessor U2. The Vrl pin is a voltage reference low pin which provides the low reference voltage for the analog-to-digital portion of the microprocessor U2. Port C terminals PC0, PC1, PC2, PC3 and PC4 are I/O pins which interconnect with the coding and decoding of the emitter/detector array as shown more clearly in Figures 3 and 4. Analog-to-digital terminals AN0, AN1, AN2 and AN3 are interconnected with the detection circuitry as shown more clearly in Figure 4. The Vss terminal of the microprocessor U2 is connected to Gnd, while I/O pin PD6 is connected to one terminal of resistor R6. The remaining terminal of resistor R6 is connected to Vcc.

Referring now to Figure 3, the emitter portion of the present invention is shown. The PB0 line is connected to one terminal of resistor B of resistor network R3 as well as to the base terminal of one of the Darlington transistor pairs of component U3, a Darlington transistor array, while I/O line PB1 is connected to resistor A of resistor network R3 which is in turn connected to the base of another Darlington transistor pair of component U3. Similarly, I/O lines PB2, PB3, PB4 and PB5 are connected to resistors F, E, D and C respectively of resistor network R3 as well as to a base terminal of the Darlington transistor pair contained in component U4, also a Darlington transistor array. The remaining terminals of resistors A, B, C, D, E and F of resistor network R3 are tied together and thereafter to Vcc. The Vrh line is connected to one terminal of resistors R4 and R5 with the remaining terminals of resistors R4 and R5 being connected to Vcc and Gnd respectively. The I/O line PB7 is connected to the D input of component U5 which is a

binary coded decimal (BCD) to decimal decoder while PC0, PC1 and PC2 (supplied by component U1, not shown) are connected to the A, B and C inputs respectively of decoder U5. The collector terminal associated with the Darlington transistor pair for I/O line PB0 is connected to one terminal of resistor R10 while the collector terminal associated with the Darlington pair for I/O line PB1 is connected to one terminal of resistor R9. The remaining terminals of resistor R9 and R10 are thereafter connected to each other and to one terminal of resistor R8 and capacitor C4 as well as to all four of the collector terminals associated with the Darlington transistor array U4. The remaining terminal of resistor R8 is connected to Vcc while the remaining terminal of capacitor C4 is connected to Gnd. The SUB terminals of Darlington transistor arrays U3 and U4 are connected to Gnd. The emitter terminal of the Darlington transistor pair associated with I/O line PB0 of component U3 is connected to the anode of emitters CR0, CR1, CR2, CR3, CR4, CR5, CR6 and CR7 while similarly the emitter of component U3 which is associated with the I/O line PB1 is connected to the anode of emitters CR8 through CR15. The emitters in the preferred embodiment of the present invention are infrared light emitting diodes although it is to be understood that other types of emitters can and may be utilized without departing from the spirit and scope of the present invention. Similarly, the emitter terminals associated with I/O lines PB2, PB3, PB4 and PB5 of Darlington transistor array U4 are connected to the anodes of emitters CR16-23, CR24-31, CR32-39 and CR40-47 respectively. The cathodes of emitters CR7, CR15, CR23, CR31, CR39 and CR47 are connected to the collector terminal of one of the Darlington transistor pairs of U8 which is also a Darlington transistor array with the base terminal associated with this Darlington transistor pair being connected to terminal 7 of U5, a BCD-to-decimal decoder. Similarly, the cathodes of emitters CR6, CR14, CR22, CR30, CR38 and CR46 are connected to the collector terminal of another Darlington transistor pair of

component U8 with the base terminal associated therewith being connected to output pin 6 of decoder U5. The cathodes of emitters CR5, CR13, CR21, CR29, CR37, and CR45 are connected to the collector terminal of a Darlington transistor pair of component U8 with the base terminal associated therewith being connected to pin 5 of decoder U5. The cathode terminals of emitters CR4, CR12, CR20, CR28, CR36 and CR44 are connected to the collector terminal of another Darlington transistor pair of array U8 with the base terminal associated therewith being connected to output pin 4 of decoder U5. The cathodes of emitters CR3, CR11, CR19, CR27, CR35 and CR43 are connected to the collector terminal of a Darlington transistor pair from component U9 which is another Darlington transistor array with the base terminal associated therewith being connected to output pin 3 of decoder U3. The cathodes of emitters CR2, CR10, CR18, CR26, CR34 and CR42 are similarly connected to a collector terminal of another Darlington transistor pair of array U9 with the base terminal associated therewith being connected to terminal 2 of decoder U5. The cathodes of emitters CR1, CR9, CR17, CR25, CR33 and CR41 are connected to the collector terminal of another Darlington transistor pair of array U9 with the base terminal associated therewith being connected to output pin 1 of decoder U5. The cathodes of emitters CR0, CR8, CR16, CR24, CR32 and CR40 are connected to the collector of another Darlington transistor pair contained in array U9 with the base terminal associated therewith being connected to output pin 0 of decoder U5. The emitter terminals and SUB terminals of array U8 are connected together and thereafter to Gnd while, similarly, the emitter and SUB terminals of array U9 are also connected together and thereafter to Gnd. Accordingly, through the use of arrays U3, U4, U8 and U9, the emitters CR0 through CR47 are connected so as to form a matrix (the operation of which will be described more fully below).

Referring now to Figure 4, there is shown the detection and decoding circuitry associated with the detectors of the

present invention. The I/O line PC0 is connected to the input of inverter C of component U1 while, similarly, I/O lines PC1 and PC2 are connected to the input of inverters D and E of component U1. This thereby produces PC0, PC1 and PC2 which is connected to terminals A, B and C respectively of decoder U5 (previously mentioned) as well as to terminals A, B and C respectively of binary coded decimal-to-decimal decoders U6 and U7. Port C I/O line PC3 is connected to the D terminal of decoder U7 while I/O terminal PC4 is connected to the D terminal of decoder U6. Analog-to-digital I/O line AN0 is connected to one terminal of the A resistors of transistor arrays R6 and R7 and thereafter to the collector terminals of the phototransistors or detectors Q0, Q1, Q2, Q3, Q4, Q5, Q6, Q7 and Q16, Q17, Q18, Q19, Q20, Q21, Q22, Q23. Digital I/O line AN1 is similarly connected to one terminal of the B resistors of resistor networks R6 and R7 and thereafter connected to the collectors of detectors Q8 through Q15 and Q24 through Q31. The digital I/O line AN2 is connected to one terminal of the C resistors of resistor networks R6 and R7 and thereafter to the collectors of the detectors Q32 through Q39. Similarly, the I/O line AN3 is connected to one terminal of the D resistors of the resistor networks R6 and R7 and thereafter to the collectors of detectors Q40 through Q47. The remaining terminals of resistors A, B, C and D of R6 are connected together and thereafter to Vcc while the remaining terminals of resistors A, B, C and D of resistor network R7 are similarly connected together and thereafter to Gnd. The output pin 0 of decoder U7 is connected to the emitter terminals of detectors Q0 and Q8 while similarly the paired emitter terminals of detectors Q1 and Q9, Q2 and Q10, Q3 and Q11, Q4 and Q12, Q5 and Q13, Q6 and Q14, Q7 and Q15 are connected together and thereafter to terminals 1, 2, 3, 4, 5, 6 and 7 respectively of decoder U7. Additionally, the emitters of detectors Q16 and Q24 and Q32 and Q40 are connected together thereafter being connected to terminal 0 of decoder U6 while, similarly, the four emitters from detectors Q17 and Q25 and Q33

and Q41, Q18 and Q26 and Q34 and Q42, Q19 and Q27 and Q35 and Q43, Q20 and Q28 and Q36 and Q44, Q21 and Q29 and Q37 and Q45, Q22 and Q30 and Q38 and Q46, Q23 and Q31 and Q39 and Q47 are connected together and thereafter to terminals 1, 2, 3, 4, 5, 6 and 7 respectively of decoder U6. This thereby creates a matrixing scheme similar to that of the detectors of Figure 3.

Referring now to Figure 5 there is illustrated a diagrammatic representation of an opto-matrix frame and bezel. Shown are emitters CR0 through CR47 and detectors Q0 through Q47 which comprise a 16x32 matrix with 16 emitters and detectors in the Y or vertical direction and 32 emitters and detectors in the X or horizontal direction. It is to be understood that although not shown the emitters and detectors are fixedly mounted on a printed circuit board or the like for properly holding and aligning an emitter/detector pair. Also diagrammatically illustrated is the light pattern produced by an emitter and which is received by a detector. Each emitter when energized, from a diagrammatic standpoint, can be said to produce a principal light beam pattern shown generally at 22 with non-collimated light 24 dispersing further and further apart, the more distant the detector is from the emitter. This therefore causes detectors adjacent the light received by the principal light beam 22 to register some light and which must be compensated for as will be discussed more fully below. Further, when emitters such as CR0 and CR4 are adjacent the corner and thereby the bezel 20, non-collimated light 24 will have a tendency to bounce off the bezel 20. This bounced light produces a reflected beam shown generally at 26 with the result that some of the reflected beams 26 are received by the detector which is the object of the principal light beam 22. Therefore, should a stylus be introduced into the display area 12 and which does in fact block the principal light beam 22, some non-collimated light 24 via the reflected beams 26 is received by an associated detector such as Q0 with the result that, under

certain light conditions, sufficient light is received by the detector such that a hit by a stylus is not registered as such. This problem of reflected light or glare becomes less and less prevalent as the detectors towards the center of the CRT are utilized. Due to manufacturing efficiencies, the same detectors and emitters are utilized near the corners of the bezel 20 as near the center. Accordingly it has been found that, by reducing the power and thereby light output for four emitters adjacent each corner of the bezel 20, the power of the reflected beams is reduced to an acceptable non-error-producing level. Accordingly, by reducing the power to emitters CR0, CR1, CR2, CR3, CR4, CR5, CR6, and CR7 to one level of reduced power and reducing power to emitters CR8, CR9, CR10, CR11, CR12, CR13, CR14 and CR15 to a second level of power, light output may be decreased adjacent the corners of the bezel for the first two emitters, slightly increased for the next two emitters and is at full power for the rest of the opto-matrix frame. It is to be understood, however, that more or less numbers of emitters may be given reduced power or that the detectors may similarly be treated without departing from the spirit and scope of the present invention.

OPERATION OF THE PRESENT DEVICE

Referring now to Figures 2, 3 and 4, the overall electrical operation of the present invention will be discussed. It is to be remembered that the present invention interacts with a host computer (not shown) which allows a CRT to present information over a video display area 12 which is part of an interactive relationship between the operator 16 and a program or operation such that the opto-matrix touch input screen designates operator decisions to the host computer. It is submitted that the host computer and the programs used with it are within the scope of one skilled in the art and therefore are not discussed in detail below. The host computer introduces a clock signal to the clock terminal of Figure 1, which is received by the C port I/O line PC5 and the interrupt terminal of the microprocessor U2. This

clock stream produced by the host computer continues for as long as input from the opto-matrix frame may be desired with the result that upon the absence of a clock signal, an interrupt is initiated in the microprocessor U2. Accordingly, upon appropriate power up and the presence of clock signals to the microprocessor U2, the opto-matrix device begins a scan-type of sequence which causes the LED's to be fired, phototransistors to be read, and internal analysis of the information by appropriate software. Since the operation of the present device is cyclical in nature, a signal cycle will be discussed by way of example, although it is to be understood that the remainder of the devices perform in the same manner.

Upon power up of the microprocessor U2, a main program loop is initiated in software (Figures 6 through 11). It is submitted that the flow chart diagrams illustrated in Figures 6 through 11 taken together with the description of the preferred embodiment herewith are sufficient so as to enable one skilled in the art to write the appropriate software. This starts with the initialization of the pointers at 100, which thereby begins the X and Y beam count at a known start point of zero. Thereafter, the microprocessor waits for a preset number of synchronizing clock pulses at 110 which are received from the host computer thereby insuring complete synchronization between the microcomputer U2 and the host computer. An X phototransistor at 120 is then turned on which would be Q4 (Figure 5) as the start of the initial cycle in the present example. This turning on of the phototransistor allows the transistor to settle down or stabilize. This is accomplished by selecting the appropriate address for I/O lines PC0, PC1 and PC2 which are presented to decoder U7 which is then enabled by I/O line PC3 which thereby allows current to flow through Q4. The LED CR4 is then fired by energization of I/O line PB0 in conjunction with the address presented by PC0, PC1 and PC2 along with the enabling I/O line PB7 which thereby enables line 4 of decoder U5. This firing of the X LED CR4 at 130 also takes into account a wait period so as

to insure that the LED CR4 is completely turned on. Further, for LED's CR0 through CR7 a current-limiting resistor R10 is utilized in conjunction with the Darlington transistor array U3 (used as a source driver) which allows current to flow through emitter CR0 through CR7 at a decreased brightness. Similarly, for emitters CR8 through CR15, a second current-limiting resistor R9 is also utilized so as to diminish the light output of the associated emitters. The value of R9 is preferably one-half of R10 thereby firing the two emitters adjacent each corner of the bezel 20 (Figure 5) at a brightness which is slightly less than the next two adjacent emitters. The remainder of the emitters which are driven by Darlington transistor array U4 do not utilize such current-limiting resistors since full brightness or maximum optical power output is desirable. In this manner, and as previously mentioned, a power profiling is accomplished such that for example, emitters CR0 and 1 have a reduced optical output power which thereby reduces the reflected beams 26 with CR8 and 9 having a slightly greater optical power but still less than the remainder of the emitters not adjacent the corners of the bezel 20. Resistor array R3 is provided as a pull up resistor network to insure that each emitter has minimum proper power for firing. Accordingly, when CR4 is fired, current is caused to flow through the emitter of the lower Darlington transistor pair of array U3 which thereby drives a collector of Darlington transistor array U8 (used as a sink driver) such that the emitter is actively driven and the Darlington transistor array U8 and U9 are actively driven. After the LED CR4 is completely turned on a conversion is started at 140 which in this example dictates that analog-to-digital line AN0 takes the value produced by Q4 and starts to convert this value to a digital number. This digital number is determined by a reference value which is controlled by the reference divider of Vrh contained on the microprocessor U2 with all signal voltages being ratiometrically converted relative to this reference. It has been determined that this Vrh reference value should be set to Vq where Vq is

the maximum voltage input and corresponds to a deselected phototransistor or to a selected phototransistor with an extremely low ambient light level. Resistor networks R6 and R7 determine the Vq maximum reference level. During the digital conversion process at 140, the LED CR4 is turned off at 150 with the digital conversion then completed and read and stored in the microprocessor at 160. With the LED CR4 off, another reading is taken of the phototransistor Q4 which results in a ambient light reading at 170 which is then started to be converted to a digital number at 180. Thereafter a count check is utilized at 190 to determine if there are any more Y's or Y phototransistors to interrogate. This is done since X and Y phototransistors are sampled alternately and since there are less devices in the Y direction than the X, for the purpose of expeditious processing, when the maximum number of Y devices have been sampled, the remainder of the X devices are sampled starting at 440 and described more fully below.. Accordingly, in the present example there are more Y phototransistors to be sampled with the result that Y phototransistor Q0 is turned on at 200. Thereafter at 210 the ambient conversion of the X phototransistor Q4 which was read at 170 is completed with the ambient value subtracted out at 220. This therefore compares the read converted value at 160, which is the fired LED CR4 value, with the read ambient value at 170 where CR4 was off, subtracting the two and determining at 230 whether phototransistor Q4 is saturated. If Q4 is not saturated which would tend to indicate that a hit is present or something is blocking light from detector Q4 then a NO condition exists at 240 which is presented at 260. A comparison is then made which compares the value presented with a previously calculated and stored threshold level from 320 or 330 to determine whether the light beam is to be considered as broken or non-broken at 280 and 290 respectively. If the light beam was non-broken then a new threshold is calculated at 320. In the presence of a broken condition, a flag representing (in the present example) X4

broken is presented at 340. The new threshold and flag condition at 320 and 340 are thereafter presented as data at 350. Alternately, at 230 if a saturated condition exists, this is presented at 250 as a YES condition which is then given to 270 which is compared against a predetermined fixed minimum threshold value. If this value is less than the fixed minimum number, it is at 300 then considered as a broken flag condition which is presented to 340 and thereafter to 350. If the comparison at 270 determines that the difference is greater than or equal to a present threshold level, this is presented via 310 to 330 which calculates a new threshold level (for use at 260) which is in turn presented to 350 as a non-broken or non-hit condition. The new threshold value is computed at 320 or 330 and used by 260 as the threshold for comparison purposes. Accordingly, in this manner a continuous and dynamic sampling of ambient light is utilized and taken into account. Further, device degradation which generally occurs over a considerable period of time and which results in decreased sensitivity by the phototransistor or decreased light output by the emitter is automatically taken into account since, within predetermined absolute minimums and maximums, new thresholds are continuously calculated and utilized.

Processing of the Y axes is then started at 360 in a manner very similar to that of the X axes. This results in the Y LED CR0 being fired for a sufficiently long duration of time at 370 to insure complete LED turn-on with a digital conversion of Q0 started at 380. This conversion at 380 is possible since the Y sensor Q4 was turned on at 200. This seemingly early sampling of Q0 is done since the crystal which determines the frequency at which the microprocessor U2 runs is substantially greater than the clock rate or the data output rate (discussed below). Thereafter LED CR0 is turned off at 390 with the value received by Q0 read when the conversion is complete at 400. Upon completion of the conversion the ambient value of Q0 is determined at 410 with the conversion to a digital number started

at 420. Immediately after the start of the digital conversion at 420, the next X sensor which is Q5 is turned on at 450. During the Q5 turn on period the ambient converted value Q0 is read when completed at 460 with the ambient value being subtracted out from the value determined during the firing of LED CR0 at 470. This value is then presented to 480 to determine whether detector Q0 is saturated at 480 with a NO or YES condition being presented to 490 or 500 respectively. Similarly, minimum thresholds are analyzed at 510 and 520. After the comparison at 510, a broken or non-broken condition is determined at 530 and 540 with a broken Y0 flag broken indication at 590 if a broken condition does exist or a new threshold being calculated at 570 if a non-broken condition exists. Again the flag condition and new threshold from 590 and 570 respectively are used to supply Y0 data at 600. The comparison made at 520 is presented by 550 as a flag at 590 if a less than minimum threshold condition exists or at 560 if a new threshold is to be calculated at 580. Thereafter, the new threshold level is calculated at 580 with this value and a non-broken condition supplied to 600. At this point a processing of an X coordinate emitter/detector pair is initiated at 610 and presented as 620 to begin again at block 130 which fires the next X LED CR5 with a repetition of the processing as mentioned for Figures 6 through 9. In this manner, toggling is accomplished between the X and Y axes until at box 190 it is determined that there are no more Y's to be interrogated which is then presented as a jump via 440 to box 625 which thereafter turns on the 17th X axis phototransistor, Q36. X axis LED CR36 is then fired at 630 with the process then continuing in a manner substantially identical to the previously discussed X and Y axes processing. Thereafter at box 830 the X data is presented at 840 to 110 with the process then repeating as long as the host computer continues to send out a clock signal.

It is to be remembered that during this entire time frame the host computer upon receiving a synchronization signal from microprocessor U2 in a data stream (described more fully below)

is required to know in advance the size of the touch input matrix and to keep track of the data stream so as to know which X and Y pair status is being given.

Accordingly, at 350, 600 and 830 data which represents an X or Y broken or non-broken status condition is presented onto the data line. Therefore, referring now to Figure 12 there can be seen a timing and data scheme for the present invention. Upon initialization and synchronization at 110 of Figure 6 four continuous ones are placed onto the data line for the host computer to receive. This thereby lets the host computer know that a synchronization frame has occurred and that the host computer should now start to count. Thereafter, the data is presented in 4-bit bytes with the first two bits always being zero and the third and fourth bits indicating broken or non-broken conditions for the X and Y axes respectively. If a broken condition does exist, then a 1 is placed onto the data line and if an unbroken condition exists, then a 0 is utilized. As an example, should a hit occur at the intersection of CR0 and CR4 and since these are the first X and Y pairs interrogated, the first 4-bit byte of data after synchronization will read (0011). However, had a hit occurred at the intersection of CR0 and CR5, then the first 4-bit byte would have contained (0001) and the second 4-bit byte would have contained (0010). For those frames where no Y axis detector is being interrogated, a 0 is preferably inserted as a false bit although a 1 may also be utilized. This 4-bit byte data stream is continued until all the X detectors have been interrogated with the microprocessor U2 sending out the 4-bit sync cycle at the end of the interrogation thereby indicating a new cycle or frame. Additionally, the present device will allow for beam averaging, the disclosure of which may be found in U.S. Patent No. 4,267,443 "Photoelectric Input Apparatus", issued May 12, 1981 to Carroll et al, incorporated by reference herein, and which allows for a stylus between two emitters to be registered as a hit between two

beams thereby effectively doubling the resolution or interpolation of the present system to a 32x64 matrix.

It is to be remembered that many variations of the present invention may be accomplished without departing from the spirit and scope of the present invention. For example, power profiling resistors may be placed on individual emitters or detectors or at the decoders rather than at the Darlington transistor arrays without departing from the spirit and scope of the present invention. Further, the program could be utilized in a different sequence without departing from the spirit and scope of the present invention. Also, other data streams may be utilized such as parallel output using additional I/O lines which are available or different types of serial data streams. Additionally, different types of arrays other than Darlington transistors may be utilized while different types of decoders may be used while other types of detectors such as photodiodes may be used. It is also to be remembered that the firing or detection order of the emitters and detectors may be changed to any order desired. The present device may also be used with or without a display or a CRT or with a flat panel display.

Accordingly, the present invention produces a device which accommodates for changing ambient light levels, emitter and/or detector degradation and which has few components.

CLAIMS:

1. A touch input device having digital ambient or extraneous light sampling and/or compensation, comprising:

an opto-matrix frame having optical emitters (CR) disposed in two adjacent sides of the frame;

optical detectors (Q) disposed in the two sides of the frame opposite the emitters, characterized in that:

at least one driver (U3, U4, U8, U9) is connected to the emitters for activating at least one emitter at a time;

a decoding or selection device (U5, U6, U7) is electrically connected to the optical detectors for sampling the light received by the detectors;

a digital converter (U2) connected to the decoding device for converting the value of the light received by the detectors to a digital value;

a processor (U2) connected to the converter for comparing the digital value (210, 460, 690) of the light received by a detector for the time frame prior to (120, 200, 625) and/or during (130, 370, 630) and after (160, 400, 660) activation of a corresponding emitter, thereby deriving a signal (350, 600, 830) manifesting the interruption or noninterruption of light by said emitter and introduced to said detector regardless of extraneous or ambient light.

2. A device according to claim 1, wherein the driving device (U3, U4, U8, U9) is comprised of a Darlington transistor array.

3. A device according to claim 1, wherein the decoding or selection device (U5, U6, U7) is a BCD-to-decimal converter.

4. A device according to claim 1, wherein the digital converter (U2) and the processor (U2) are part of a microprocessor.

5. A touch input device having digital ambient or extraneous light sampling and/or compensation, comprising:

an opto-matrix frame having optical emitters (CR) disposed in two adjacent sides of the frame;

optical detectors (Q) disposed in the two sides of the frame opposite the emitters, characterized in that:

at least one driver (U3, U4, U8, U9) is connected to the emitters for activating at least one emitter at a time;

a decoding or selection device (U5, U6, U7) is electrically connected to the optical detectors for sampling the light received by the detectors;

a digital converter (U2) connected to the decoding device for converting the value of the light received by the detectors to a digital value;

a processor (U2) connected to the converter for sequentially comparing the digital value (210, 460, 690) of the light received by a detector for the time frame prior to (120, 200, 625) and/or during (130, 370, 630) and after (160, 400, 660) activation of a corresponding emitter, thereby deriving a signal (350, 600, 830) manifesting an average signal or level related to emitter output and detector reception pairs, wherein the signal is stored by the processor to be used as a comparison level (270, 520, 750) for subsequent comparisons of the same emitter/detector pair.

6. A device according to claim 2, wherein the driving device (U3, U4, U8, U9) is comprised of a Darlington transistor array.

7. A device according to claim 2, wherein the decoding or selection device (U5, U6, U7) is a BCD-to-decimal converter.

8. A device according to claim 2, wherein the digital converter (U2) and the processor (U2) are part of a microprocessor.

9. A touch input device having digital ambient or extraneous light sampling and/or compensation, comprising:

an opto-matrix frame having optical emitters (CR) disposed in two adjacent sides of the frame;

optical detectors (Q) disposed in the two sides of the frame opposite the emitters, characterized in that:

at least one driver (U3, U4, U8, U9) is connected to the emitters for activating at least one emitter at a time;

a decoding or selection device (U5, U6, U7) is electrically connected to the optical detectors for sampling the light received by the detectors;

a digital converter (U2) connected to the decoding device for converting the value of the light received by the detectors to a digital value;

a processor (U2) connected to the converter for sequentially comparing the digital value (210, 460, 690) of the light received by a detector for the time frame prior to (120, 200, 625) and/or during (130, 370, 630) and after (160, 400, 660) activation of a corresponding emitter, thereby deriving a signal (350, 600, 830) manifesting an average signal or level related to emitter output and detector reception pairs, wherein the signal is stored by the processor to be used as a comparison level (270, 520, 750) for subsequent comparisons of the same emitter/detector pair and the interruption or noninterruption of light by said emitter and introduced to said detector regardless of ambient or extraneous light.

10. A device according to claim 9, wherein the driving device (U3, U4, U8, U9) is comprised of a Darlington transistor array.

11. A device according to claim 9, wherein the decoding or selection device (U5, U6, U7) is a BCD-to-decimal converter.

12. A device according to claim 9, wherein the digital converter (U2) and the processor (U2) are part of a microprocessor.

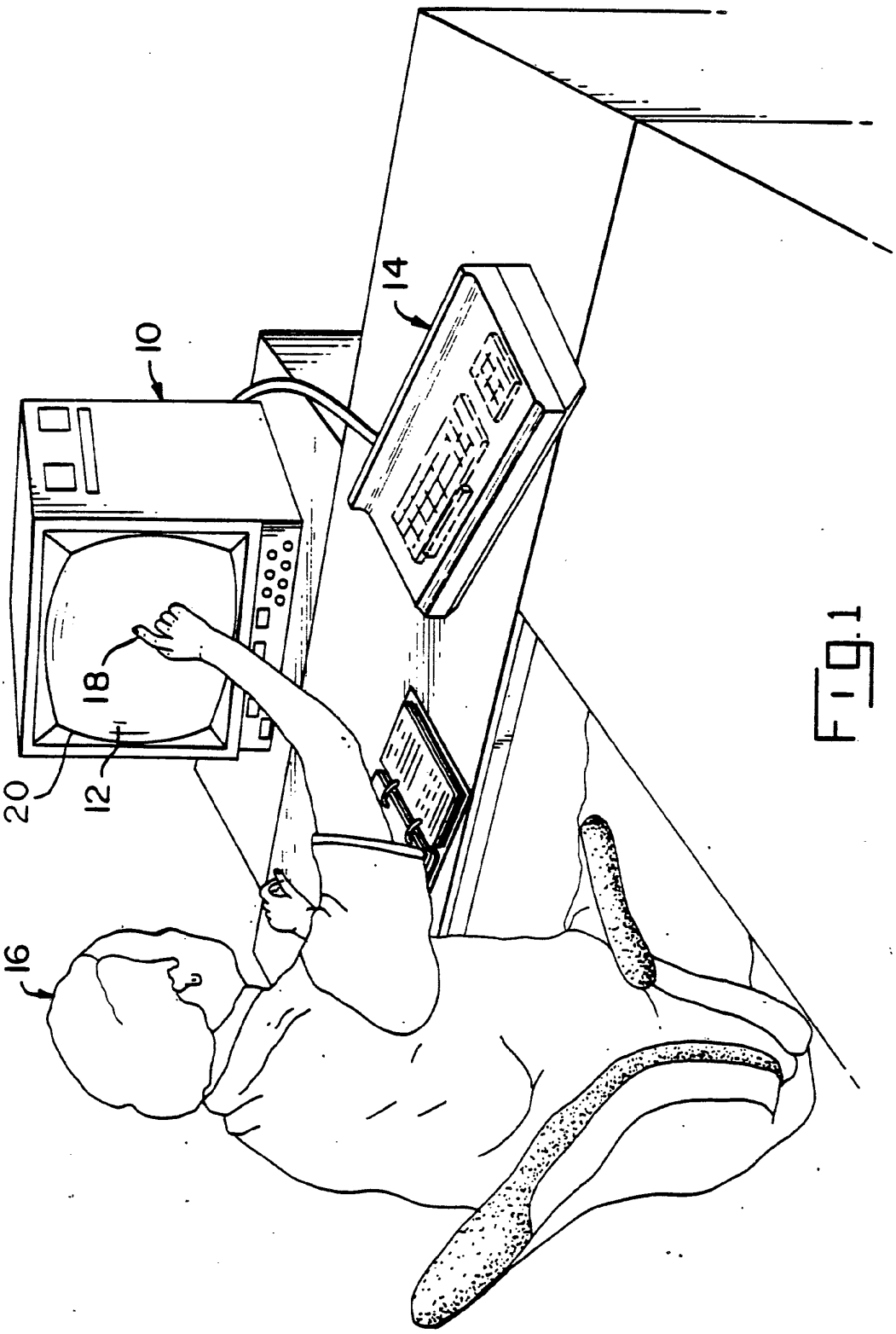

FIG. 1

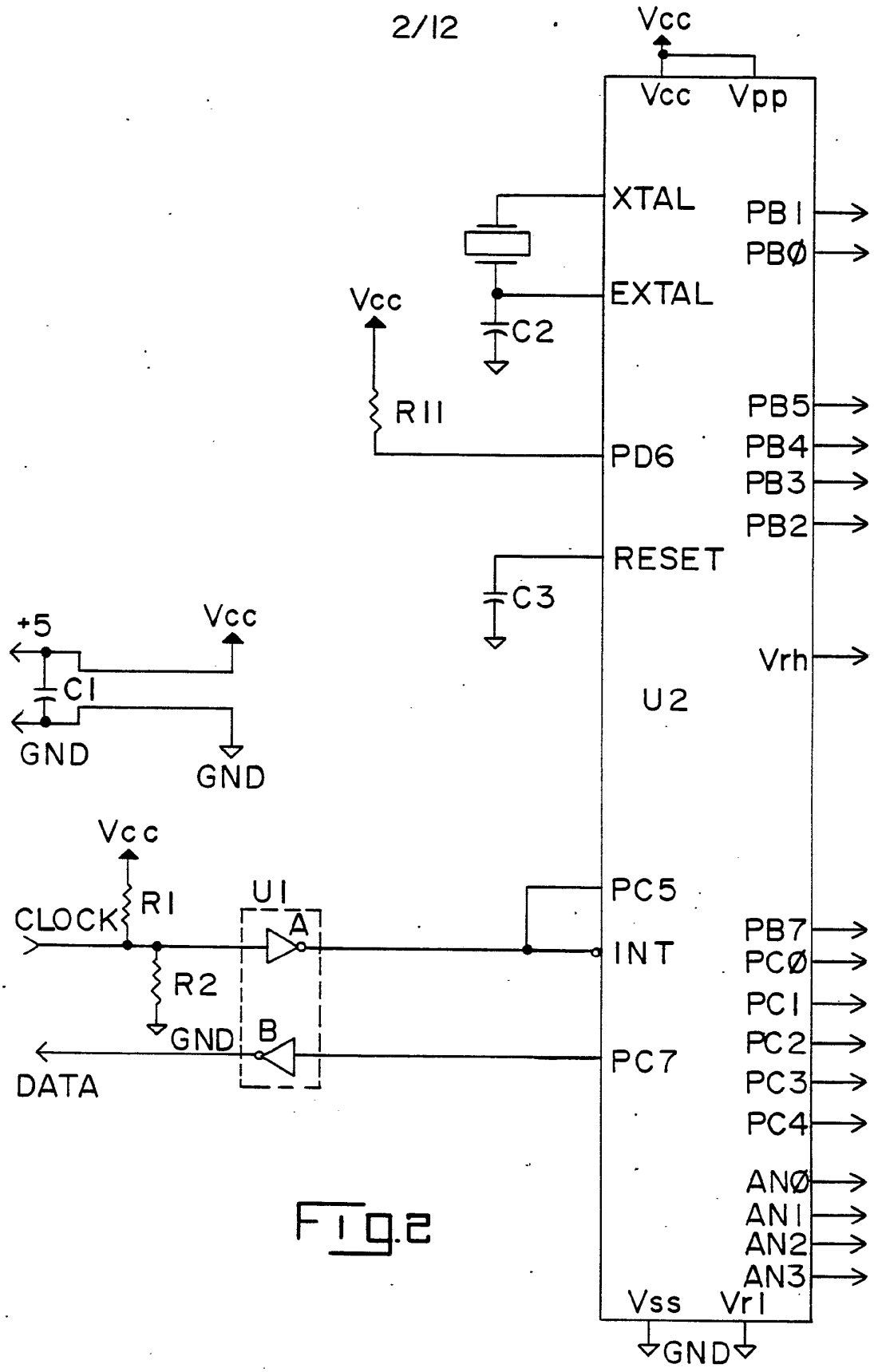
Vcc
Vcc
Vpp
XTAL
EXTAL
C2
Vcc
R11
PD6
RESET
C3
+5
Vcc
C1
GND
GND
Vcc
R1
CLOCK
U1
A
R2
GND
B
DATA
PC5
INT
PC7
PB1
PB0
PB5
PB4
PB3
PB2
Vrh
U2
PB7
PC0
PC1
PC2
PC3
PC4
AN0
AN1
AN2
AN3
Vss
Vrl
GND

Fig.2

FIG.3

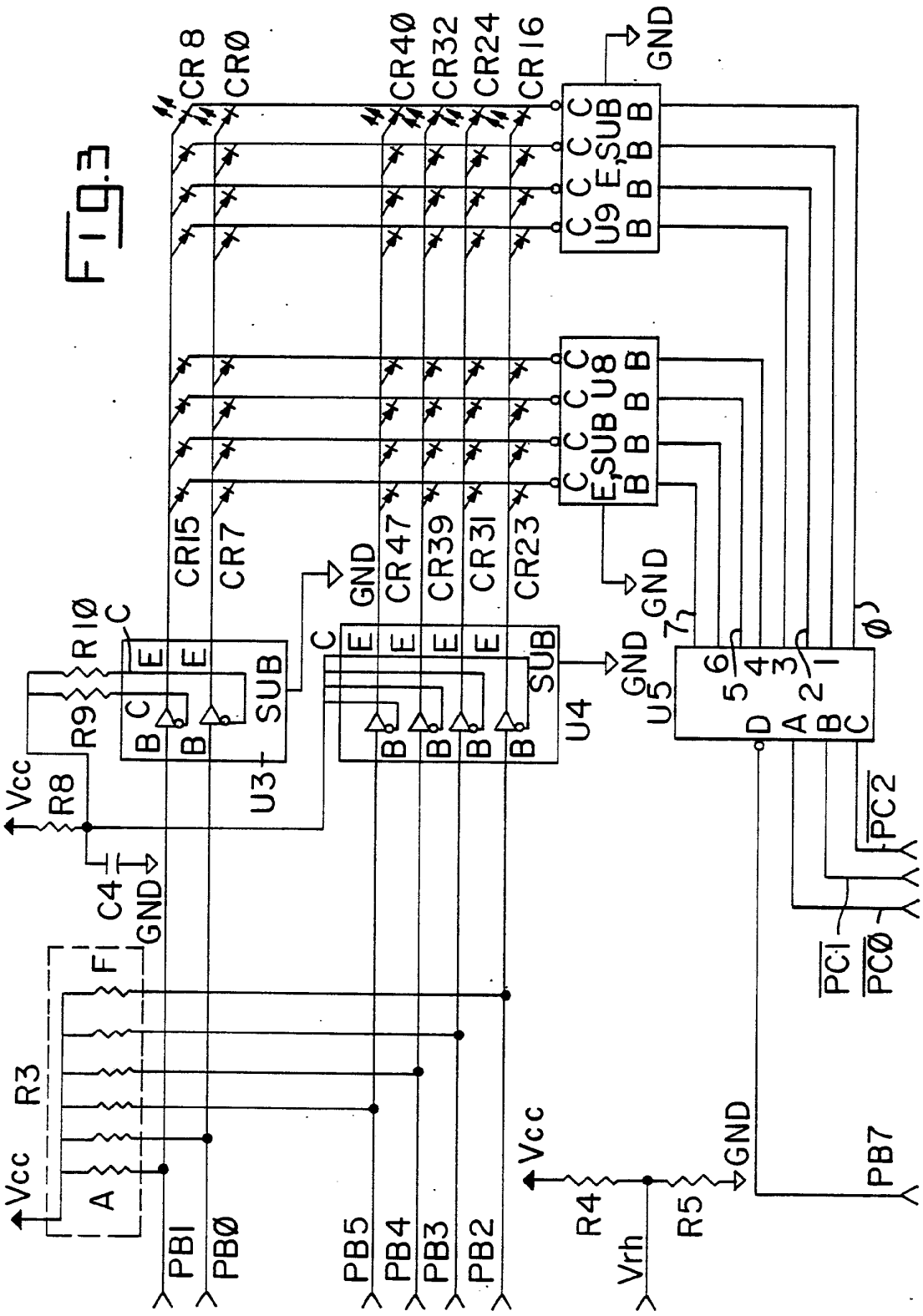
CR8
CR0
CR40
CR32
CR24
CR16
GND
U9
U8
CR15
CR7
CR47
CR39
CR31
CR23
R10
R9
R8
C4
GND
Vcc
U3
U4
U5
F1
R3
A
PB1
PB0
PB5
PB4
PB3
PB2
R4
R5
Vrh
PB7
PC2
PC1
PC0

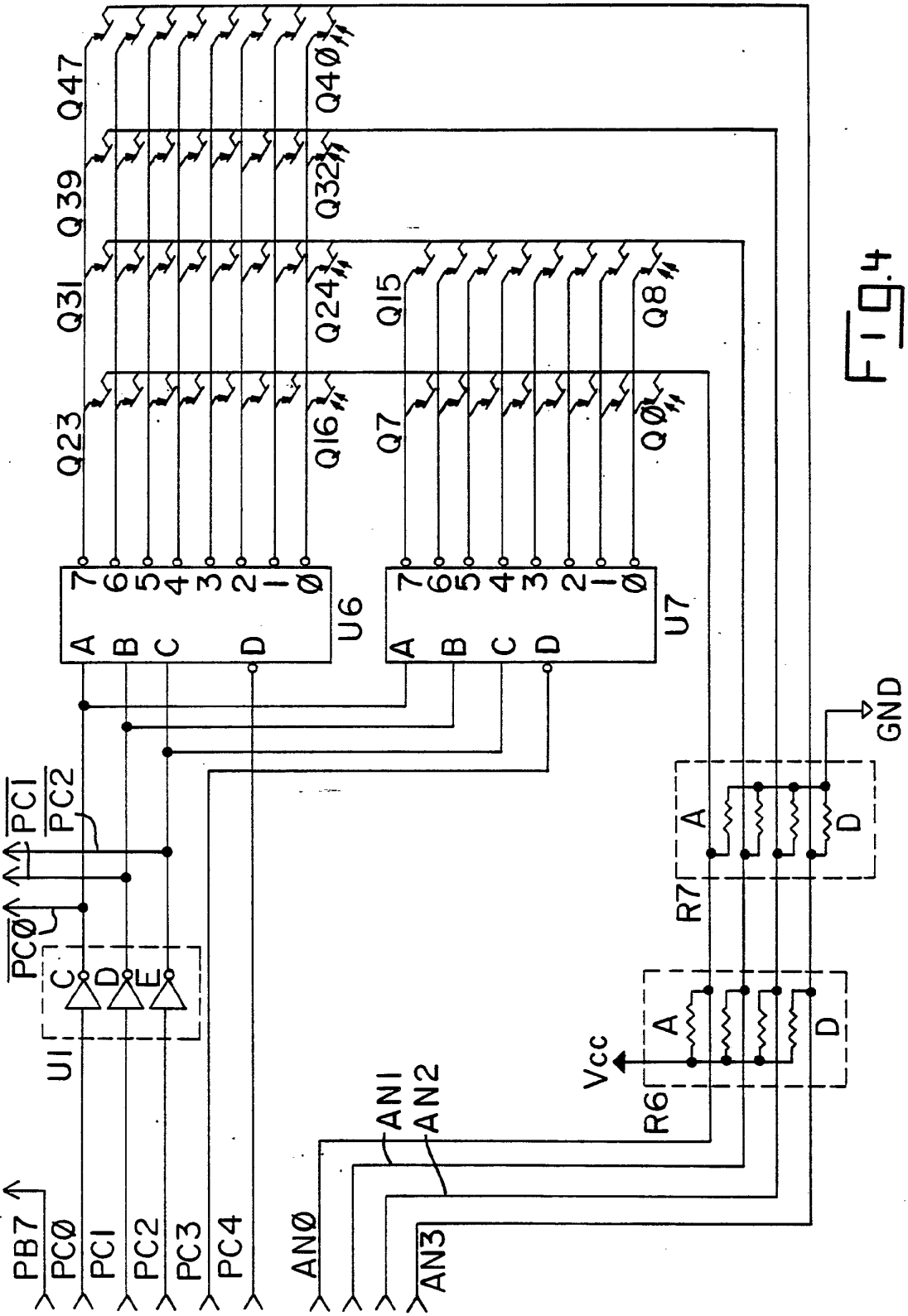
Q47
Q40
Q39
Q32
Q31
Q24
Q15
Q8
Q23
Q16
Q7
Q0
7 6 5 4 3 2 1 0
A B C D
U6
U7
GND
PC1
PC2
PC0
C D E
U1
R7
R6
A
D
Vcc
AN1
AN2
AN0
AN3
PB7
PC0
PC1
PC2
PC3
PC4

FIG. 4

FIG.5

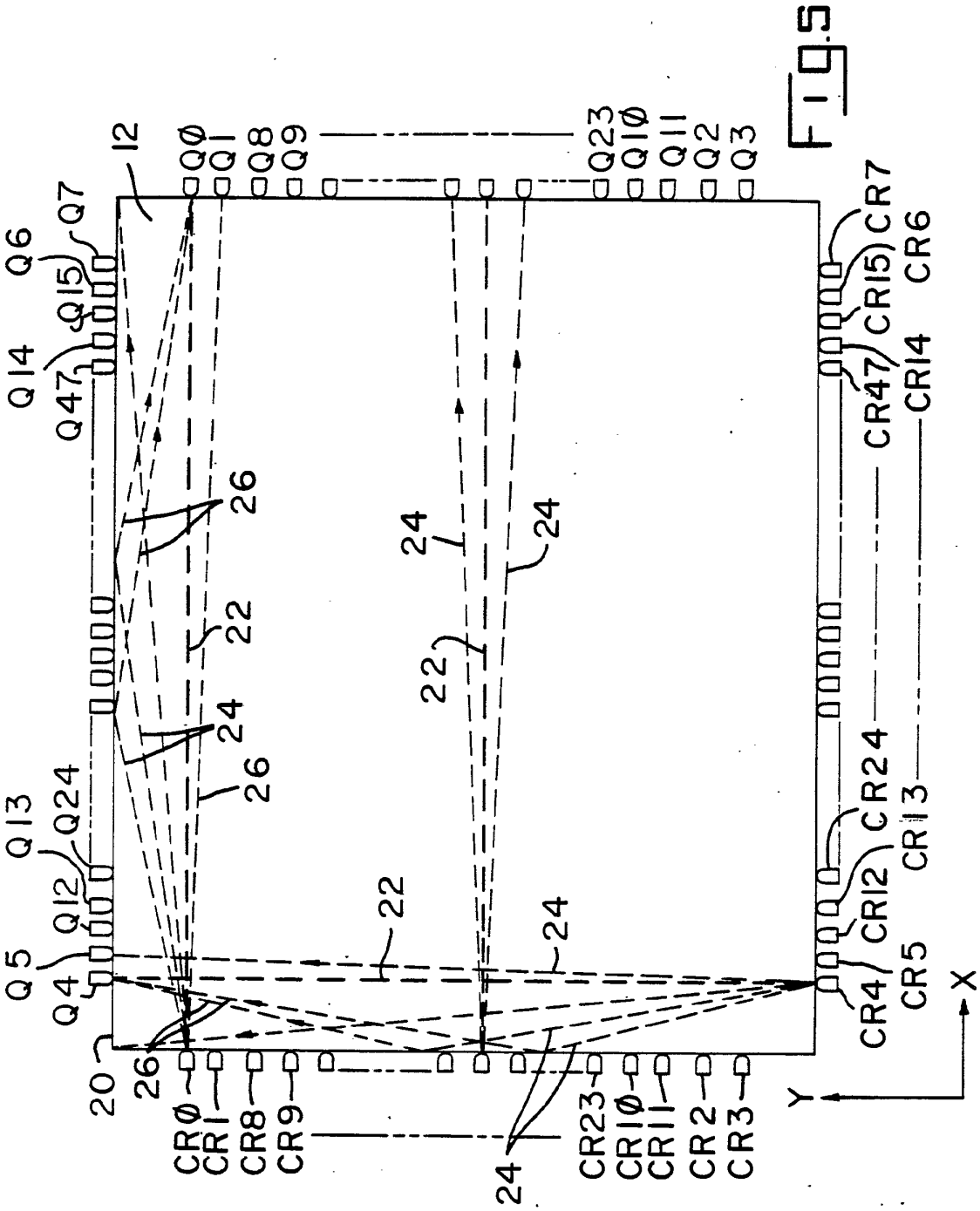
12
Q0
Q1
Q8
Q9
Q23
Q10
Q11
Q2
Q3
Q7
Q6
Q15
Q14
Q47
26
24
22
Q24
Q13
Q12
Q5
Q4
20
CR0
CR1
CR8
CR9
CR23
CR10
CR11
CR2
CR3
CR7
CR6
CR15
CR14
CR47
CR24
CR13
CR12
CR5
CR4
X
Y

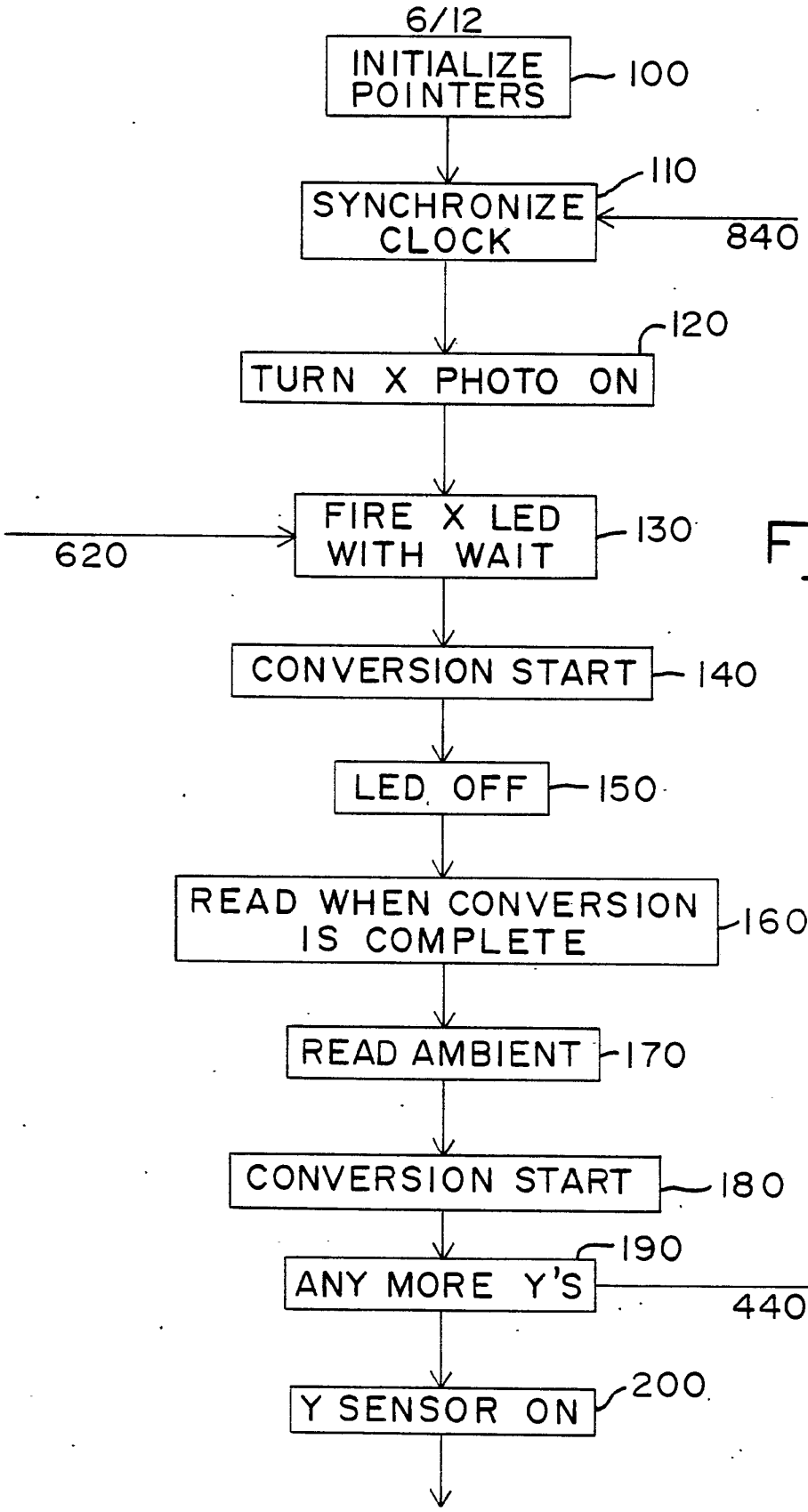
INITIALIZE POINTERS
100
SYNCHRONIZE CLOCK
110
840
TURN X PHOTO ON
120
620
FIRE X LED WITH WAIT
130
CONVERSION START
140
LED OFF
150
READ WHEN CONVERSION IS COMPLETE
160
READ AMBIENT
170
CONVERSION START
180
ANY MORE Y'S
190
440
Y SENSOR ON
200

FIG.6

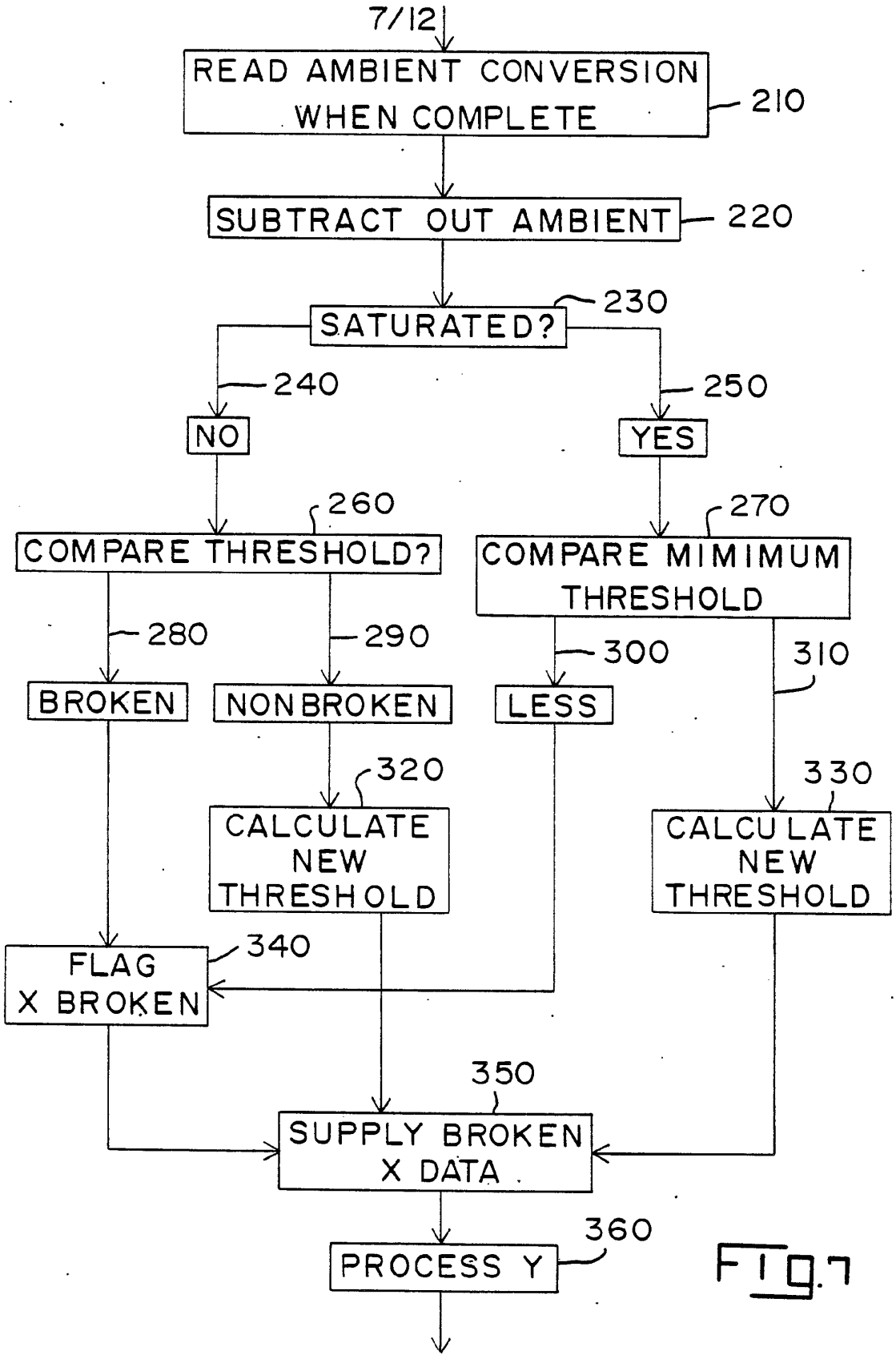
7/12
READ AMBIENT CONVERSION WHEN COMPLETE
210
SUBTRACT OUT AMBIENT
220
SATURATED?
230
240
250
NO
YES
260
270
COMPARE THRESHOLD?
COMPARE MIMIMUM THRESHOLD
280
290
300
310
BROKEN
NONBROKEN
LESS
320
330
CALCULATE NEW THRESHOLD
CALCULATE NEW THRESHOLD
340
FLAG X BROKEN
350
SUPPLY BROKEN X DATA
360
PROCESS Y

FIG.7

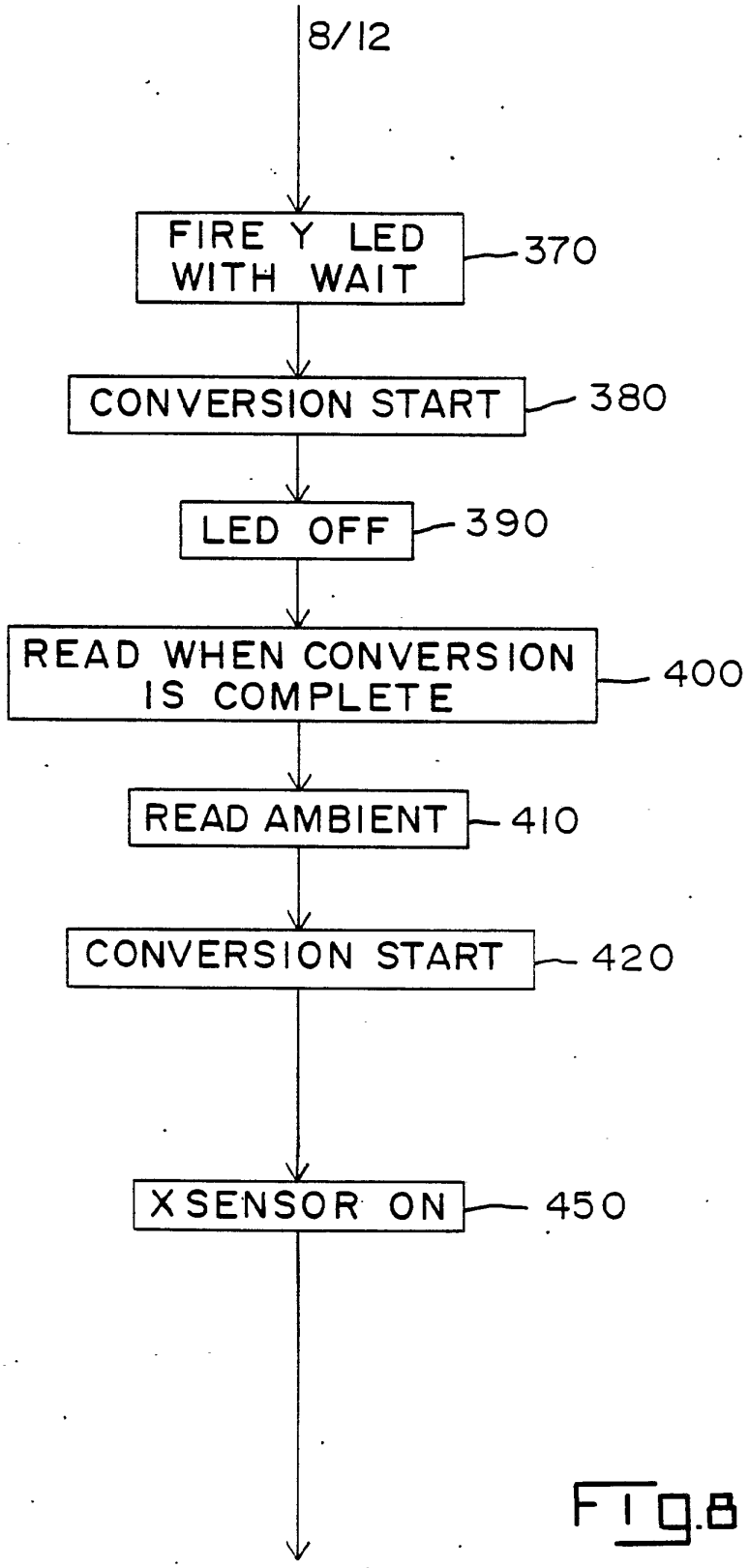
FIRE Y LED WITH WAIT
370
CONVERSION START
380
LED OFF
390
READ WHEN CONVERSION IS COMPLETE
400
READ AMBIENT
410
CONVERSION START
420
XSENSOR ON
450

Fig.8

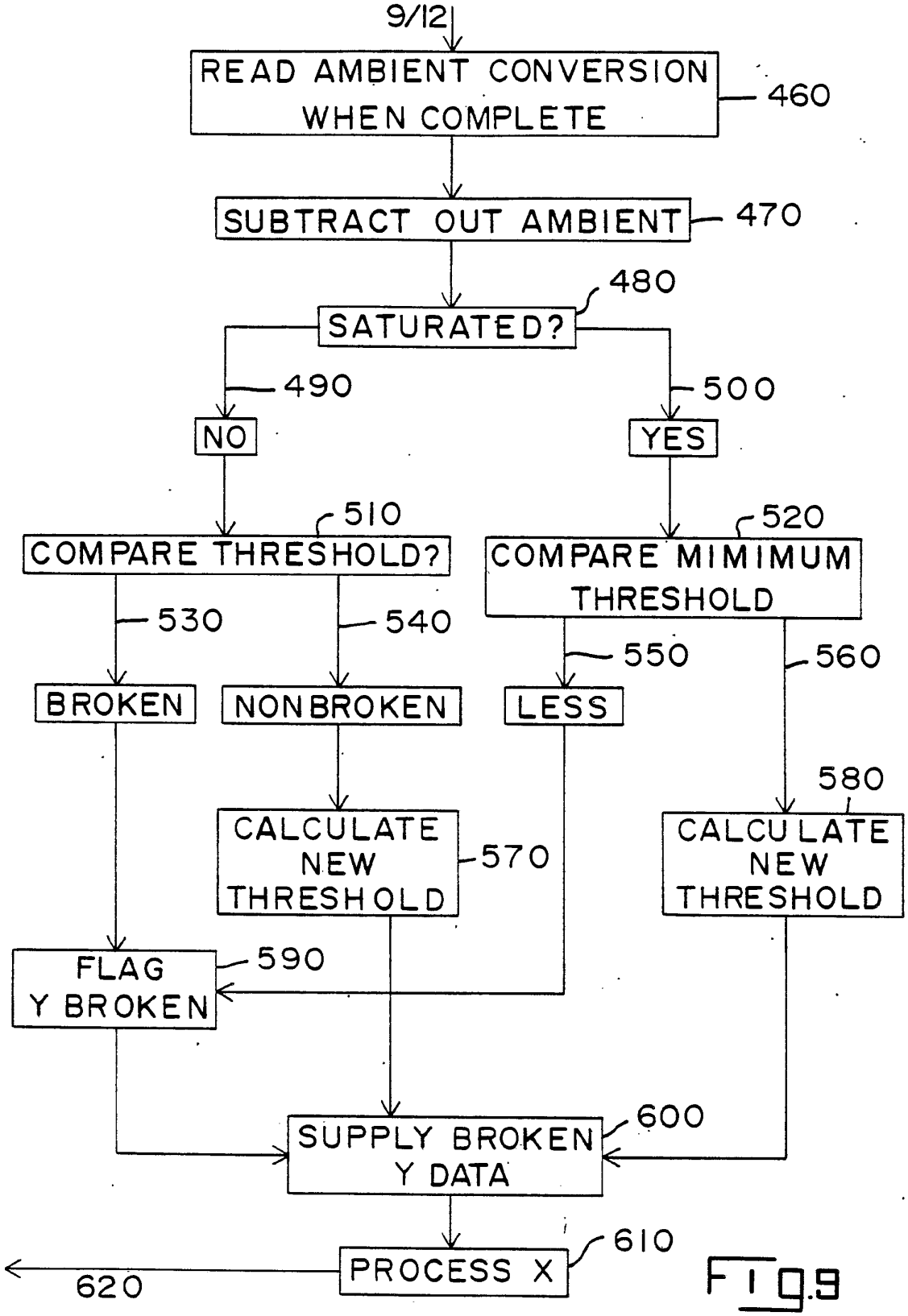
9/12
READ AMBIENT CONVERSION WHEN COMPLETE
460
SUBTRACT OUT AMBIENT
470
480
SATURATED?
490
500
NO
YES
510
COMPARE THRESHOLD?
520
COMPARE MIMIMUM THRESHOLD
530
540
550
560
BROKEN
NONBROKEN
LESS
580
CALCULATE NEW THRESHOLD
570
CALCULATE NEW THRESHOLD
FLAG Y BROKEN
590
SUPPLY BROKEN Y DATA
600
PROCESS X
610
620

FIG.9

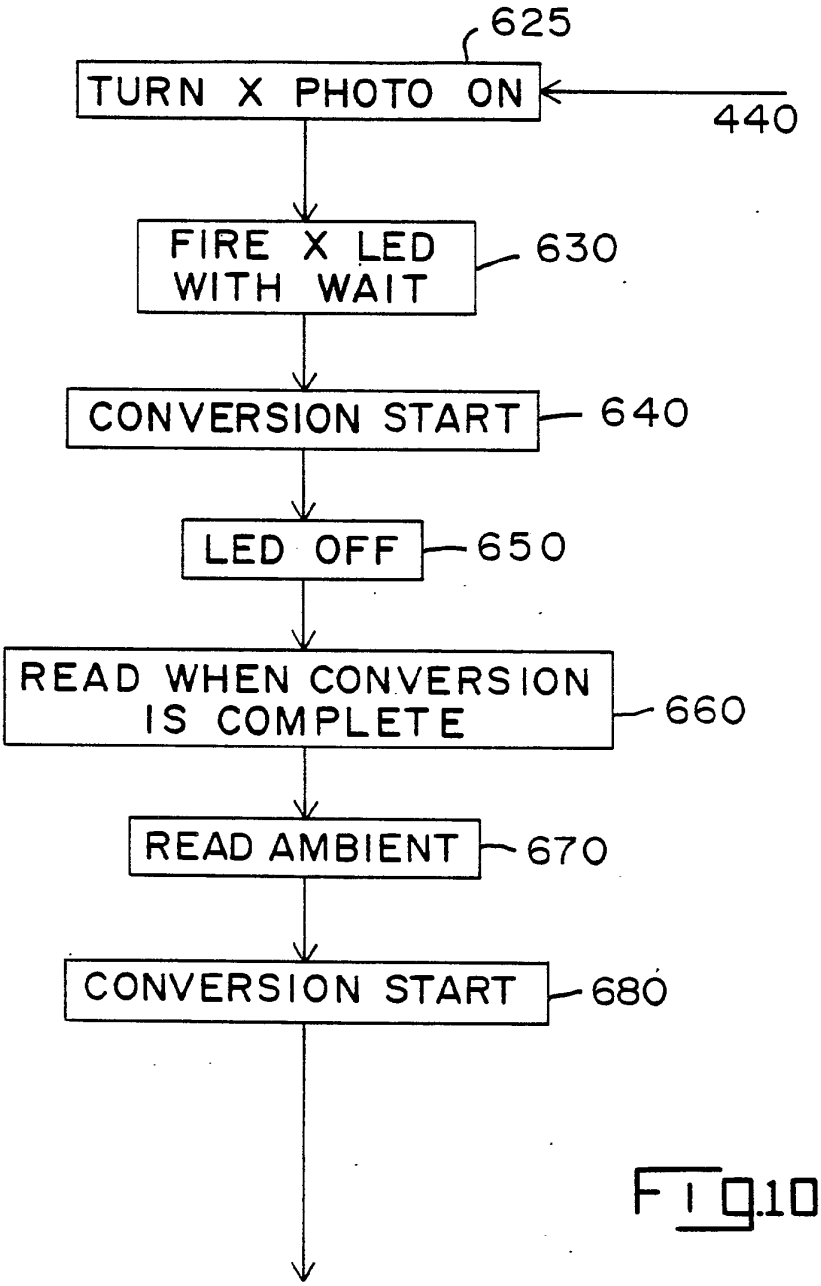
625
TURN X PHOTO ON
440
FIRE X LED WITH WAIT
630
CONVERSION START
640
LED OFF
650
READ WHEN CONVERSION IS COMPLETE
660
READ AMBIENT
670
CONVERSION START
680

FIG.10

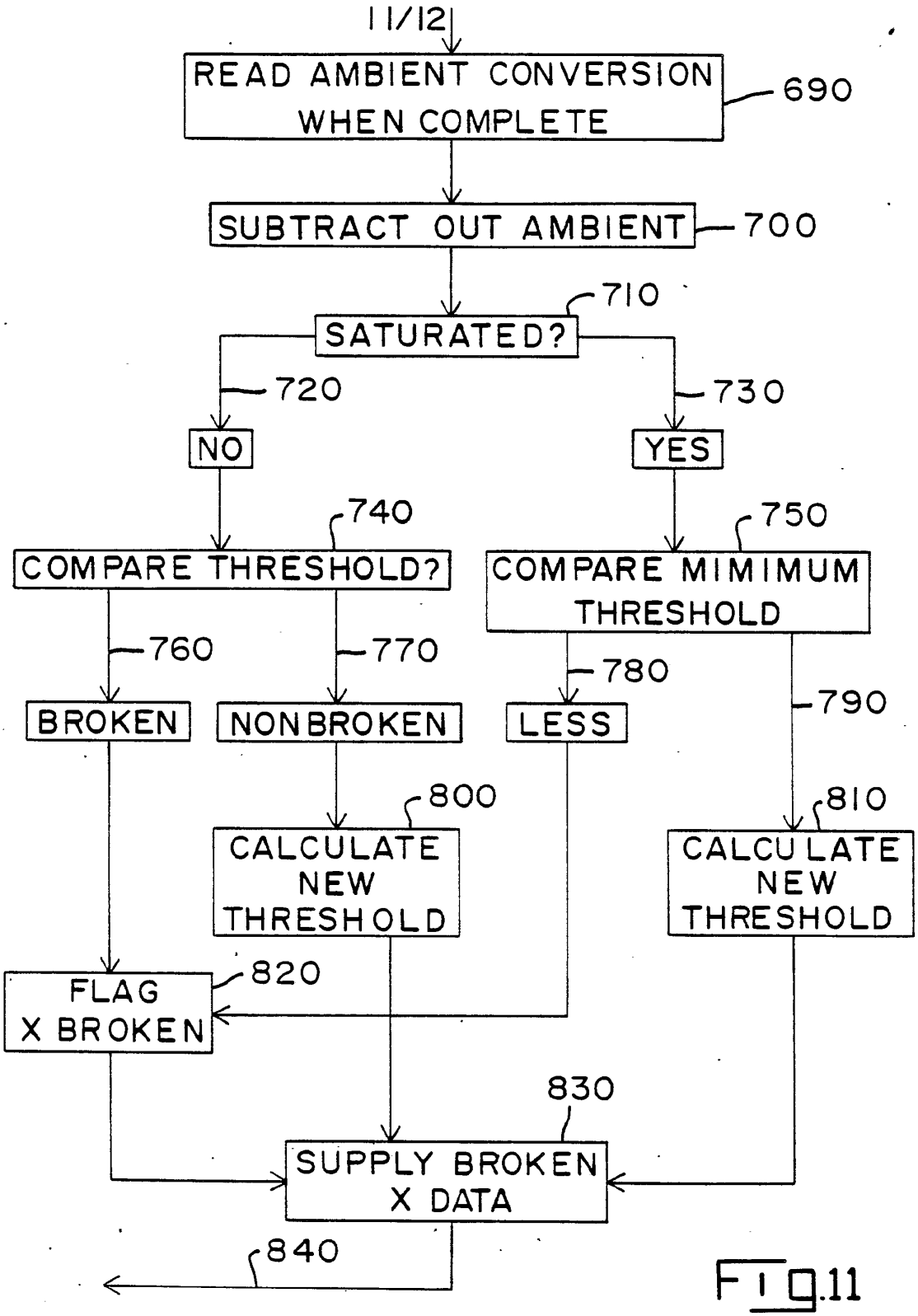
11/12
READ AMBIENT CONVERSION WHEN COMPLETE
690
SUBTRACT OUT AMBIENT
700
SATURATED?
710
720
730
NO
YES
740
750
COMPARE THRESHOLD?
COMPARE MIMIMUM THRESHOLD
760
770
780
790
BROKEN
NONBROKEN
LESS
800
810
CALCULATE NEW THRESHOLD
CALCULATE NEW THRESHOLD
FLAG X BROKEN
820
830
SUPPLY BROKEN X DATA
840

FIG.11

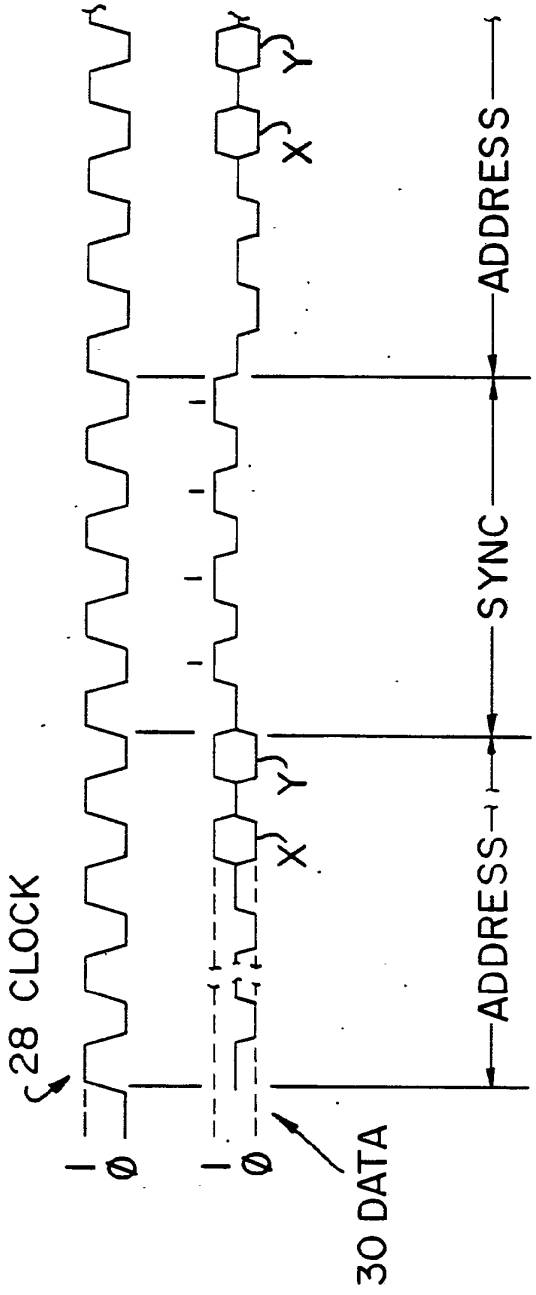

Fig.12

INTERNATIONAL SEARCH REPORT

International Application No PCT/US 85/00923

I. CLASSIFICATION OF SUBJECT MATTER (if several classification symbols apply, indicate all) [8]

According to International Patent Classification (IPC) or to both National Classification and IPC

IPC[4]: G 06 K 11/06

II. FIELDS SEARCHED

Minimum Documentation Searched [7]

Classification System	Classification Symbols
IPC[4]	G 06 K 11/06

Documentation Searched other than Minimum Documentation to the Extent that such Documents are Included in the Fields Searched [8]

III. DOCUMENTS CONSIDERED TO BE RELEVANT [9]

Category [10]	Citation of Document, [11] with indication, where appropriate, of the relevant passages [12]	Relevant to Claim No. [13]
A	US, A, 4198623 (SANDERS ASSOCIATES MISEK et al.) 15 April 1980, see column 2, lines 51-57; column 6, lines 42-46; figures 1,4	1,5,9
A	US, A, 4243879 (CARROLL MANUFACTURING CORP. CARROLL et al.) 6 January 1981, see abstract; column 3, lines 20-34,46-51; column 6, lines 53-57; column 7, lines 31-37; figure 1 (cited in the application)	1,5,9
A	US, A, 3764813 (BELL TELEPHONE LABS, CLEMENT et al.) 9 October 1973, see abstract; column 2, lines 1-5; column 4, lines 40-45; column 5, lines 14-26; figure 2A-1 (cited in the application)	1,2,5,6,9, 10
X,P	Electrical Design News, volume 29, nr. 15, 26 July 1984, (Boston, Massachesetts, US) R. Comerford:"Pointing-device innovations enhance user/machine interfaces", pages 54-66 see page 59, lines 41-44,48-57; figure 3	1

* Special categories of cited documents: [10]

"A" document defining the general state of the art which is not considered to be of particular relevance

"E" earlier document but published on or after the international filing date

"L" document which may throw doubts on priority claim(s) or which is cited to establish the publication date of another citation or other special reason (as specified)

"O" document referring to an oral disclosure, use, exhibition or other means

"P" document published prior to the international filing date but later than the priority date claimed

"T" later document published after the international filing date or priority date and not in conflict with the application but cited to understand the principle or theory underlying the invention

"X" document of particular relevance; the claimed invention cannot be considered novel or cannot be considered to involve an inventive step

"Y" document of particular relevance; the claimed invention cannot be considered to involve an inventive step when the document is combined with one or more other such documents, such combination being obvious to a person skilled in the art.

"&" document member of the same patent family

IV. CERTIFICATION

Date of the Actual Completion of the International Search	Date of Mailing of this International Search Report
21st August 1985	23 SEP. 1985
International Searching Authority	**Signature of Authorized Officer**
EUROPEAN PATENT OFFICE	G.L.M. Kruydenberg

Form PCT/ISA/210 (second sheet) (January 1985)

ANNEX TO THE INTERNATIONAL SEARCH REPORT ON

INTERNATIONAL APPLICATION NO. PCT/US 85/00923 (SA 9608)

This Annex lists the patent family members relating to the patent documents cited in the above-mentioned international search report. The members are as contained in the European Patent Office EDP file on 09/09/85

The European Patent Office is in no way liable for these particulars which are merely given for the purpose of information.

Patent document cited in search report	Publication date	Patent family member(s)	Publication date
US-A- 4198623	15/04/80	None	
US-A- 4243879	06/01/81	US-A- 4201295	06/05/80
US-A- 3764813	09/10/73	None	

For more details about this annex :
see Official Journal of the European Patent Office, No. 12/82

Electronic Patent Application Fee Transmittal	
Application Number:	
Filing Date:	
Title of Invention:	USER INTERFACE
First Named Inventor/Applicant Name:	Magnus Goertz
Filer:	Marc Aron Berger
Attorney Docket Number:	NEONODE.P039
Filed as Large Entity	

Track I Prioritized Examination - Nonprovisional Application under 35 USC 111(a) Filing Fees

Description	Fee Code	Quantity	Amount	Sub-Total in USD($)
Basic Filing:				
Utility application filing	1011	1	380	380
Utility Search Fee	1111	1	620	620
Utility Examination Fee	1311	1	250	250
Request for Prioritized Examination	1817	1	4800	4800
Pages:				
Claims:				
Independent claims in excess of 3	1201	1	250	250
Miscellaneous-Filing:				

Description	Fee Code	Quantity	Amount	Sub-Total in USD($)
Publ. Fee- early, voluntary, or normal	1504	1	300	300
Processing Fee, except for Provis. apps	1808	1	130	130
Petition:				
Patent-Appeals-and-Interference:				
Post-Allowance-and-Post-Issuance:				
Extension-of-Time:				
Miscellaneous:				
		Total in USD ($)		**6730**

Electronic Acknowledgement Receipt

EFS ID:	11537884
Application Number:	13310755
International Application Number:	
Confirmation Number:	1066
Title of Invention:	USER INTERFACE
First Named Inventor/Applicant Name:	Magnus Goertz
Customer Number:	75660
Filer:	Marc Aron Berger
Filer Authorized By:	
Attorney Docket Number:	NEONODE.P039
Receipt Date:	04-DEC-2011
Filing Date:	
Time Stamp:	07:44:13
Application Type:	Utility under 35 USC 111(a)

Payment information:

Submitted with Payment	yes
Payment Type	Credit Card
Payment was successfully received in RAM	$6730
RAM confirmation Number	6951
Deposit Account	
Authorized User	

File Listing:

Document Number	Document Description	File Name	File Size(Bytes)/ Message Digest	Multi Part /.zip	Pages (if appl.)

1	TrackOne Request	NEONODE-P039_RequestForTrackl.pdf	133865 c319295b50f34fb784c45abaa12bb2a0de697151	no	2
Warnings:					
Information:					
2	Application Data Sheet	NEONODE-P039ApplicationDataSheet.pdf	1089084 c42ad1c7ef8919b63dee973941a0d086ab311fd3	no	4
Warnings:					
Information:					
3	Oath or Declaration filed	NEONODE-P039_Declaration.pdf	73873 57c4b19ed84bcd9fd9969af07d1bbad9247b4f80	no	1
Warnings:					
Information:					
4	Specification	NEONODE-P039_Specification.pdf	417958 0e148b583108cde1384c9b6773a353e68d2ebc13	no	9
Warnings:					
Information:					
5	Claims	NEONODE-P039_Claims.pdf	184779 2a642792da882c82d95df371bee73be46b56297f	no	4
Warnings:					
Information:					
6	Abstract	NEONODE-P039_Abstract.pdf	24665 8671342768d1c7724ae7a34164ad3e837ed0fcf56	no	1
Warnings:					
Information:					
7	Drawings-only black and white line drawings	NEONODE-P039_Drawings.pdf	71025 c02b63cc5e992f7e428589a7bf355b225386bb6a	no	4
Warnings:					
Information:					
8	Information Disclosure Statement (IDS) Form (SB08)	NEONODE-P039_InformationDisclosureStatement_12-04-2011.pdf	614231 599b6142f1e85717d62ba73c17bb50c95305dd03	no	8
Warnings:					
Information:					
9	Foreign Reference	EP0330767A1.pdf	725357 2164d95cbf6bfd60112d69a2a06dc51f8789dc8e	no	14
Warnings:					
Information:					

10	Foreign Reference	WO8600446A1.pdf	1433945 1c528a0b48036cd9e65dd859174ff68fbdc58a8f	no	37
Warnings:					
Information:					
11	Foreign Reference	WO8600447A1.pdf	1417959 dfce75d113c5e1100a959ddae22713ce067d4dd6	no	37
Warnings:					
Information:					
12	Non Patent Literature	CARLSON.pdf	1093238 1cd59c727b615b876596a7a1ddf6625220640b7a	no	14
Warnings:					
Information:					
13	Non Patent Literature	STREITELMEIER.pdf	397388 9388e88e27422b30495b524ca0348a94735357ae	no	8
Warnings:					
Information:					
14	Non Patent Literature	VENOLIA.pdf	596876 1a1b9919e48fc4165f834e8113e8a587031948ca	no	6
Warnings:					
Information:					
15	Non Patent Literature	DULBERG.pdf	665536 b8110a9cc9f24074acd756f6a769c783b8b29a67	no	10
Warnings:					
Information:					
16	Non Patent Literature	POGUE.pdf	966254 4e8b79f9e80683ab658a9ba1c44df251027636b2	no	17
Warnings:					
Information:					
17	Fee Worksheet (SB06)	fee-info.pdf	41551 42bc2fa181bb34901cc39f9167dfb16255154b06	no	2
Warnings:					
Information:					
			Total Files Size (in bytes):	9947584	

This Acknowledgement Receipt evidences receipt on the noted date by the USPTO of the indicated documents, characterized by the applicant, and including page counts, where applicable. It serves as evidence of receipt similar to a Post Card, as described in MPEP 503.

New Applications Under 35 U.S.C. 111
If a new application is being filed and the application includes the necessary components for a filing date (see 37 CFR 1.53(b)-(d) and MPEP 506), a Filing Receipt (37 CFR 1.54) will be issued in due course and the date shown on this Acknowledgement Receipt will establish the filing date of the application.

National Stage of an International Application under 35 U.S.C. 371
If a timely submission to enter the national stage of an international application is compliant with the conditions of 35 U.S.C. 371 and other applicable requirements a Form PCT/DO/EO/903 indicating acceptance of the application as a national stage submission under 35 U.S.C. 371 will be issued in addition to the Filing Receipt, in due course.

New International Application Filed with the USPTO as a Receiving Office
If a new international application is being filed and the international application includes the necessary components for an international filing date (see PCT Article 11 and MPEP 1810), a Notification of the International Application Number and of the International Filing Date (Form PCT/RO/105) will be issued in due course, subject to prescriptions concerning national security, and the date shown on this Acknowledgement Receipt will establish the international filing date of the application.