UNITED STATES PATENT AND TRADEMARK OFFICE

UNITED STATES DEPARTMENT OF COMMERCE
United States Patent and Trademark Office
Address: COMMISSIONER FOR PATENTS
P.O. Box 1450
Alexandria, Virginia 22313-1450
www.uspto.gov

APPLICATION NO.	ISSUE DATE	PATENT NO.	ATTORNEY DOCKET NO.	CONFIRMATION NO.
10/315,250	01/10/2012	8095879	NEONODE.P004	1226

75660 7590 12/21/2011

Soquel Group, LLC
P.O. Box 691
Soquel, CA 95073

ISSUE NOTIFICATION

The projected patent number and issue date are specified above.

Determination of Patent Term Adjustment under 35 U.S.C. 154 (b)
(application filed on or after May 29, 2000)

The Patent Term Adjustment is 1228 day(s). Any patent to issue from the above-identified application will include an indication of the adjustment on the front page.

If a Continued Prosecution Application (CPA) was filed in the above-identified application, the filing date that determines Patent Term Adjustment is the filing date of the most recent CPA.

Applicant will be able to obtain more detailed information by accessing the Patent Application Information Retrieval (PAIR) WEB site (http://pair.uspto.gov).

Any questions regarding the Patent Term Extension or Adjustment determination should be directed to the Office of Patent Legal Administration at (571)-272-7702. Questions relating to issue and publication fee payments should be directed to the Application Assistance Unit (AAU) of the Office of Data Management (ODM) at (571)-272-4200.

APPLICANT(s) (Please see PAIR WEB site http://pair.uspto.gov for additional applicants):

Magnus Goertz, Stockholm, SWEDEN;

IR103 (Rev. 10/09)

APPLE 1003

UNITED STATES PATENT AND TRADEMARK OFFICE

UNITED STATES DEPARTMENT OF COMMERCE
United States Patent and Trademark Office
Address: COMMISSIONER FOR PATENTS
P.O. Box 1450
Alexandria, Virginia 22313-1450
www.uspto.gov

BIB DATA SHEET

CONFIRMATION NO. 1226

SERIAL NUMBER	FILING or 371(c) DATE RULE	CLASS	GROUP ART UNIT	ATTORNEY DOCKET NO.
10/315,250	12/10/2002	715	2171	NEONODE.P004

APPLICANTS
Magnus Goertz, Stockholm, SWEDEN;

** CONTINUING DATA **********

** FOREIGN APPLICATIONS **********

** IF REQUIRED, FOREIGN FILING LICENSE GRANTED ** ** SMALL ENTITY **
01/16/2003

Foreign Priority claimed	35 USC 119(a-d) conditions met	Verified and Acknowledged	Met after Allowance	STATE OR COUNTRY	SHEETS DRAWINGS	TOTAL CLAIMS	INDEPENDENT CLAIMS
☐ Yes ☑ No	☐ Yes ☑ No	Examiner's Signature	☐ Initials	SWEDEN	4	18	1

ADDRESS
Soquel Group, LLC
P.O. Box 691
Soquel, CA 95073
UNITED STATES

TITLE
USER INTERFACE FOR MOBILE HANDHELD COMPUTER UNIT

FILING FEE RECEIVED		
1940	FEES: Authority has been given in Paper No._____ to charge/credit DEPOSIT ACCOUNT No._____ for following:	☐ All Fees ☐ 1.16 Fees (Filing) ☐ 1.17 Fees (Processing Ext. of time) ☐ 1.18 Fees (Issue) ☐ Other _____ ☐ Credit

BIB (Rev. 05/07).

UNITED STATES PATENT AND TRADEMARK OFFICE

UNITED STATES DEPARTMENT OF COMMERCE
United States Patent and Trademark Office
Address: COMMISSIONER FOR PATENTS
P.O. Box 1450
Alexandria, Virginia 22313-1450
www.uspto.gov

Bib Data Sheet

CONFIRMATION NO. 1226

SERIAL NUMBER	FILING OR 371(c) DATE	CLASS	GROUP ART UNIT	ATTORNEY DOCKET NO.
10/315,250	12/10/2002 RULE	715	2171	NEONODE.P004

APPLICANTS

Magnus Goertz, Stockholm, SWEDEN;

**** CONTINUING DATA ***************************

**** FOREIGN APPLICATIONS *********************

IF REQUIRED, FOREIGN FILING LICENSE GRANTED
** 01/16/2003

Foreign Priority claimed	STATE OR COUNTRY	SHEETS DRAWING	TOTAL CLAIMS	INDEPENDENT CLAIMS
☐ yes ☐ no	SWEDEN	4	18	1

35 USC 119 (a-d) conditions met ☐ yes ☐ no ☐ Met after Allowance

Verified and Acknowledged _____ Examiner's Signature Initials

ADDRESS
75660

TITLE

USER INTERFACE FOR MOBILE HANDHELD COMPUTER UNIT

FILING FEE RECEIVED		
1940	FEES: Authority has been given in Paper No. _____ to charge/credit DEPOSIT ACCOUNT No. _____ for following:	☐ All Fees ☐ 1.16 Fees (Filing) ☐ 1.17 Fees (Processing Ext. of time) ☐ 1.18 Fees (Issue) ☐ Other _____ ☐ Credit

PART B - FEE(S) TRANSMITTAL

Complete and send this form, together with applicable fee(s), to: Mail **Mail Stop ISSUE FEE**
Commissioner for Patents
P.O. Box 1450
Alexandria, Virginia 22313-1450
or Fax (571)-273-2885

INSTRUCTIONS: This form should be used for transmitting the ISSUE FEE and PUBLICATION FEE (if required). Blocks 1 through 5 should be completed where appropriate. All further correspondence including the Patent, advance orders and notification of maintenance fees will be mailed to the current correspondence address as indicated unless corrected below or directed otherwise in Block 1, by (a) specifying a new correspondence address; and/or (b) indicating a separate "FEE ADDRESS" for maintenance fee notifications.

CURRENT CORRESPONDENCE ADDRESS (Note: Use Block 1 for any change of address)

75660 7590 12/01/2011
Soquel Group, LLC
P.O. Box 691
Soquel, CA 95073

Note: A certificate of mailing can only be used for domestic mailings of the Fee(s) Transmittal. This certificate cannot be used for any other accompanying papers. Each additional paper, such as an assignment or formal drawing, must have its own certificate of mailing or transmission.

Certificate of Mailing or Transmission
I hereby certify that this Fee(s) Transmittal is being deposited with the United States Postal Service with sufficient postage for first class mail in an envelope addressed to the Mail Stop ISSUE FEE address above, or being facsimile transmitted to the USPTO (571) 273-2885, on the date indicated below.

(Depositor's name)
(Signature)
(Date)

APPLICATION NO.	FILING DATE	FIRST NAMED INVENTOR	ATTORNEY DOCKET NO.	CONFIRMATION NO.
10/315,250	12/10/2002	Magnus Goertz	NEONODE.P004	1226

TITLE OF INVENTION: USER INTERFACE

APPLN. TYPE	SMALL ENTITY	ISSUE FEE DUE	PUBLICATION FEE DUE	PREV. PAID ISSUE FEE	TOTAL FEE(S) DUE	DATE DUE
nonprovisional	YES	$870	$300	$0	$1170	03/01/2012

EXAMINER	ART UNIT	CLASS-SUBCLASS
PITARO, RYAN F	2171	715-716000

1. Change of correspondence address or indication of "Fee Address" (37 CFR 1.363).
☐ Change of correspondence address (or Change of Correspondence Address form PTO/SB/122) attached.
☐ "Fee Address" indication (or "Fee Address" Indication form PTO/SB/47; Rev 03-02 or more recent) attached. **Use of a Customer Number is required.**

2. For printing on the patent front page, list
(1) the names of up to 3 registered patent attorneys or agents OR, alternatively,
(2) the name of a single firm (having as a member a registered attorney or agent) and the names of up to 2 registered patent attorneys or agents. If no name is listed, no name will be printed.
1 Soquel Group LLC
2
3

3. ASSIGNEE NAME AND RESIDENCE DATA TO BE PRINTED ON THE PATENT (print or type)

PLEASE NOTE: Unless an assignee is identified below, no assignee data will appear on the patent. If an assignee is identified below, the document has been filed for recordation as set forth in 37 CFR 3.11. Completion of this form is NOT a substitute for filing an assignment.

(A) NAME OF ASSIGNEE: Neonode Inc.
(B) RESIDENCE: (CITY and STATE OR COUNTRY): Santa Clara, CA

Please check the appropriate assignee category or categories (will not be printed on the patent): ☐ Individual ☒ Corporation or other private group entity ☐ Government

4a. The following fee(s) are submitted:
☒ Issue Fee
☒ Publication Fee (No small entity discount permitted)
☐ Advance Order - # of Copies _____

4b. Payment of Fee(s): **(Please first reapply any previously paid issue fee shown above)**
☐ A check is enclosed.
☐ Payment by credit card. Form PTO-2038 is attached.
☐ The Director is hereby authorized to charge the required fee(s), any deficiency, or credit any overpayment, to Deposit Account Number _____ (enclose an extra copy of this form).

5. **Change in Entity Status** (from status indicated above)
☐ a. Applicant claims SMALL ENTITY status. See 37 CFR 1.27.
☒ b. Applicant is no longer claiming SMALL ENTITY status. See 37 CFR 1.27(g)(2).

NOTE: The Issue Fee and Publication Fee (if required) will not be accepted from anyone other than the applicant; a registered attorney or agent; or the assignee or other party in interest as shown by the records of the United States Patent and Trademark Office.

Authorized Signature Marc A. Berger
Typed or printed name Marc A. Berger
Date December 4, 2011
Registration No. 44029

This collection of information is required by 37 CFR 1.311. The information is required to obtain or retain a benefit by the public which is to file (and by the USPTO to process) an application. Confidentiality is governed by 35 U.S.C. 122 and 37 CFR 1.14. This collection is estimated to take 12 minutes to complete, including gathering, preparing, and submitting the completed application form to the USPTO. Time will vary depending upon the individual case. Any comments on the amount of time you require to complete this form and/or suggestions for reducing this burden, should be sent to the Chief Information Officer, U.S. Patent and Trademark Office, U.S. Department of Commerce, P.O. Box 1450, Alexandria, Virginia 22313-1450. DO NOT SEND FEES OR COMPLETED FORMS TO THIS ADDRESS. SEND TO: Commissioner for Patents, P.O. Box 1450, Alexandria, Virginia 22313-1450.

Under the Paperwork Reduction Act of 1995, no persons are required to respond to a collection of information unless it displays a valid OMB control number.

Electronic Patent Application Fee Transmittal	
Application Number:	10315250
Filing Date:	10-Dec-2002
Title of Invention:	USER INTERFACE
First Named Inventor/Applicant Name:	Magnus Goertz
Filer:	Marc Aron Berger
Attorney Docket Number:	NEONODE.P004
Filed as Large Entity	

Utility under 35 USC 111(a) Filing Fees

Description	Fee Code	Quantity	Amount	Sub-Total in USD($)
Basic Filing:				
Pages:				
Claims:				
Miscellaneous-Filing:				
Petition:				
Patent-Appeals-and-Interference:				
Post-Allowance-and-Post-Issuance:				
Utility Appl issue fee	1501	1	1740	1740
Publ. Fee- early, voluntary, or normal	1504	1	300	300

Description	Fee Code	Quantity	Amount	Sub-Total in USD($)
Extension-of-Time:				
Miscellaneous:				
		Total in USD ($)		**2040**

Electronic Acknowledgement Receipt	
EFS ID:	11538511
Application Number:	10315250
International Application Number:	
Confirmation Number:	1226
Title of Invention:	USER INTERFACE
First Named Inventor/Applicant Name:	Magnus Goertz
Customer Number:	75660
Filer:	Marc Aron Berger
Filer Authorized By:	
Attorney Docket Number:	NEONODE.P004
Receipt Date:	05-DEC-2011
Filing Date:	10-DEC-2002
Time Stamp:	05:20:43
Application Type:	Utility under 35 USC 111(a)

Payment information:

Submitted with Payment	yes
Payment Type	Credit Card
Payment was successfully received in RAM	$2040
RAM confirmation Number	7645
Deposit Account	
Authorized User	

File Listing:

Document Number	Document Description	File Name	File Size(Bytes)/ Message Digest	Multi Part /.zip	Pages (if appl.)

1	Issue Fee Payment (PTO-85B)	NEONODE-P004_FeeTransmittal_12-04-2011.pdf	1639128 7bfec90db0f48a3a78303af2ba19fc80eb0a4a73	no	1
Warnings:					
Information:					
2	Fee Worksheet (SB06)	fee-info.pdf	31570 94e7b8b5310f4c5e02bb9fd679b3a70bf27f3aff	no	2
Warnings:					
Information:					
		Total Files Size (in bytes):	1670698		

This Acknowledgement Receipt evidences receipt on the noted date by the USPTO of the indicated documents, characterized by the applicant, and including page counts, where applicable. It serves as evidence of receipt similar to a Post Card, as described in MPEP 503.

New Applications Under 35 U.S.C. 111
If a new application is being filed and the application includes the necessary components for a filing date (see 37 CFR 1.53(b)-(d) and MPEP 506), a Filing Receipt (37 CFR 1.54) will be issued in due course and the date shown on this Acknowledgement Receipt will establish the filing date of the application.

National Stage of an International Application under 35 U.S.C. 371
If a timely submission to enter the national stage of an international application is compliant with the conditions of 35 U.S.C. 371 and other applicable requirements a Form PCT/DO/EO/903 indicating acceptance of the application as a national stage submission under 35 U.S.C. 371 will be issued in addition to the Filing Receipt, in due course.

New International Application Filed with the USPTO as a Receiving Office
If a new international application is being filed and the international application includes the necessary components for an international filing date (see PCT Article 11 and MPEP 1810), a Notification of the International Application Number and of the International Filing Date (Form PCT/RO/105) will be issued in due course, subject to prescriptions concerning national security, and the date shown on this Acknowledgement Receipt will establish the international filing date of the application.

PART B - FEE(S) TRANSMITTAL

Complete and send this form, together with applicable fee(s), to: Mail **Mail Stop ISSUE FEE**
Commissioner for Patents
P.O. Box 1450
Alexandria, Virginia 22313-1450
or Fax (571)-273-2885

INSTRUCTIONS: This form should be used for transmitting the ISSUE FEE and PUBLICATION FEE (if required). Blocks 1 through 5 should be completed where appropriate. All further correspondence including the Patent, advance orders and notification of maintenance fees will be mailed to the current correspondence address as indicated unless corrected below or directed otherwise in Block 1, by (a) specifying a new correspondence address; and/or (b) indicating a separate "FEE ADDRESS" for maintenance fee notifications.

CURRENT CORRESPONDENCE ADDRESS (Note: Use Block 1 for any change of address)

75660 7590 12/01/2011
Soquel Group, LLC
P.O. Box 691
Soquel, CA 95073

Note: A certificate of mailing can only be used for domestic mailings of the Fee(s) Transmittal. This certificate cannot be used for any other accompanying papers. Each additional paper, such as an assignment or formal drawing, must have its own certificate of mailing or transmission.

Certificate of Mailing or Transmission
I hereby certify that this Fee(s) Transmittal is being deposited with the United States Postal Service with sufficient postage for first class mail in an envelope addressed to the Mail Stop ISSUE FEE address above, or being facsimile transmitted to the USPTO (571) 273-2885, on the date indicated below.

(Depositor's name)
(Signature)
(Date)

APPLICATION NO.	FILING DATE	FIRST NAMED INVENTOR	ATTORNEY DOCKET NO.	CONFIRMATION NO.
10/315,250	12/10/2002	Magnus Goertz	NEONODE.P004	1226

TITLE OF INVENTION: USER INTERFACE

APPLN. TYPE	SMALL ENTITY	ISSUE FEE DUE	PUBLICATION FEE DUE	PREV. PAID ISSUE FEE	TOTAL FEE(S) DUE	DATE DUE
nonprovisional	YES	$870	$300	$0	$1170	03/01/2012

EXAMINER	ART UNIT	CLASS-SUBCLASS
PITARO, RYAN F	2171	715-716000

1. Change of correspondence address or indication of "Fee Address" (37 CFR 1.363).
☐ Change of correspondence address (or Change of Correspondence Address form PTO/SB/122) attached.
☐ "Fee Address" indication (or "Fee Address" Indication form PTO/SB/47; Rev 03-02 or more recent) attached. **Use of a Customer Number is required.**

2. For printing on the patent front page, list
(1) the names of up to 3 registered patent attorneys or agents OR, alternatively,
(2) the name of a single firm (having as a member a registered attorney or agent) and the names of up to 2 registered patent attorneys or agents. If no name is listed, no name will be printed.
1 Sequel Group LLC
2
3

3. ASSIGNEE NAME AND RESIDENCE DATA TO BE PRINTED ON THE PATENT (print or type)

PLEASE NOTE: Unless an assignee is identified below, no assignee data will appear on the patent. If an assignee is identified below, the document has been filed for recordation as set forth in 37 CFR 3.11. Completion of this form is NOT a substitute for filing an assignment.

(A) NAME OF ASSIGNEE: Neonode Inc.
(B) RESIDENCE: (CITY and STATE OR COUNTRY): Santa Clara, CA

Please check the appropriate assignee category or categories (will not be printed on the patent): ☐ Individual ☒ Corporation or other private group entity ☐ Government

4a. The following fee(s) are submitted:
☒ Issue Fee
☒ Publication Fee (No small entity discount permitted)
☐ Advance Order - # of Copies _____

4b. Payment of Fee(s): **(Please first reapply any previously paid issue fee shown above)**
☐ A check is enclosed.
☐ Payment by credit card. Form PTO-2038 is attached.
☐ The Director is hereby authorized to charge the required fee(s), any deficiency, or credit any overpayment, to Deposit Account Number _____ (enclose an extra copy of this form).

5. **Change in Entity Status** (from status indicated above)
☐ a. Applicant claims SMALL ENTITY status. See 37 CFR 1.27.
☒ b. Applicant is no longer claiming SMALL ENTITY status. See 37 CFR 1.27(g)(2).

NOTE: The Issue Fee and Publication Fee (if required) will not be accepted from anyone other than the applicant; a registered attorney or agent; or the assignee or other party in interest as shown by the records of the United States Patent and Trademark Office.

Authorized Signature Marc A. Berger
Typed or printed name Marc A. Berger
Date December 4, 2011
Registration No. 44029

This collection of information is required by 37 CFR 1.311. The information is required to obtain or retain a benefit by the public which is to file (and by the USPTO to process) an application. Confidentiality is governed by 35 U.S.C. 122 and 37 CFR 1.14. This collection is estimated to take 12 minutes to complete, including gathering, preparing, and submitting the completed application form to the USPTO. Time will vary depending upon the individual case. Any comments on the amount of time you require to complete this form and/or suggestions for reducing this burden, should be sent to the Chief Information Officer, U.S. Patent and Trademark Office, U.S. Department of Commerce, P.O. Box 1450, Alexandria, Virginia 22313-1450. DO NOT SEND FEES OR COMPLETED FORMS TO THIS ADDRESS. SEND TO: Commissioner for Patents, P.O. Box 1450, Alexandria, Virginia 22313-1450.

Under the Paperwork Reduction Act of 1995, no persons are required to respond to a collection of information unless it displays a valid OMB control number.

Electronic Patent Application Fee Transmittal	
Application Number:	10315250
Filing Date:	10-Dec-2002
Title of Invention:	USER INTERFACE
First Named Inventor/Applicant Name:	Magnus Goertz
Filer:	Marc Aron Berger
Attorney Docket Number:	NEONODE.P004
Filed as Large Entity	

Utility under 35 USC 111(a) Filing Fees

Description	Fee Code	Quantity	Amount	Sub-Total in USD($)
Basic Filing:				
Pages:				
Claims:				
Miscellaneous-Filing:				
Petition:				
Patent-Appeals-and-Interference:				
Post-Allowance-and-Post-Issuance:				
Utility Appl issue fee	1501	1	1740	1740
Publ. Fee- early, voluntary, or normal	1504	1	300	300

Description	Fee Code	Quantity	Amount	Sub-Total in USD($)
Extension-of-Time:				
Miscellaneous:				
		Total in USD ($)		**2040**

Electronic Acknowledgement Receipt

EFS ID:	11537889
Application Number:	10315250
International Application Number:	
Confirmation Number:	1226
Title of Invention:	USER INTERFACE
First Named Inventor/Applicant Name:	Magnus Goertz
Customer Number:	75660
Filer:	Marc Aron Berger
Filer Authorized By:	
Attorney Docket Number:	NEONODE.P004
Receipt Date:	04-DEC-2011
Filing Date:	10-DEC-2002
Time Stamp:	07:58:27
Application Type:	Utility under 35 USC 111(a)

Payment information:

Submitted with Payment	no

File Listing:

Document Number	Document Description	File Name	File Size(Bytes)/ Message Digest	Multi Part /.zip	Pages (if appl.)
1	Miscellaneous Incoming Letter	NEONODE-P004_CommentsOnStatementsOfReasonsForAllowance_12-04-2011.pdf	55071 077a3bdbc7233a04a5a4b6ef464f75d72ef6df54	no	2

Warnings:	
Information:	

2	Issue Fee Payment (PTO-85B)	NEONODE-P004_FeeTransmittal_12-04-2011.pdf	1639128 7bfec90db0f48a3a78303af2ba19fc80eb0a4a73	no	1
Warnings:					
Information:					
3	Fee Worksheet (SB06)	fee-info.pdf	31570 9442524ff45187f5e61bcaee13b0c6437dc4a4e6	no	2
Warnings:					
Information:					
		Total Files Size (in bytes):	1725769		

This Acknowledgement Receipt evidences receipt on the noted date by the USPTO of the indicated documents, characterized by the applicant, and including page counts, where applicable. It serves as evidence of receipt similar to a Post Card, as described in MPEP 503.

New Applications Under 35 U.S.C. 111
If a new application is being filed and the application includes the necessary components for a filing date (see 37 CFR 1.53(b)-(d) and MPEP 506), a Filing Receipt (37 CFR 1.54) will be issued in due course and the date shown on this Acknowledgement Receipt will establish the filing date of the application.

National Stage of an International Application under 35 U.S.C. 371
If a timely submission to enter the national stage of an international application is compliant with the conditions of 35 U.S.C. 371 and other applicable requirements a Form PCT/DO/EO/903 indicating acceptance of the application as a national stage submission under 35 U.S.C. 371 will be issued in addition to the Filing Receipt, in due course.

New International Application Filed with the USPTO as a Receiving Office
If a new international application is being filed and the international application includes the necessary components for an international filing date (see PCT Article 11 and MPEP 1810), a Notification of the International Application Number and of the International Filing Date (Form PCT/RO/105) will be issued in due course, subject to prescriptions concerning national security, and the date shown on this Acknowledgement Receipt will establish the international filing date of the application.

Attorney's Docket No.: NEONODE.P004 *PATENT*

IN THE UNITED STATES PATENT AND TRADEMARK OFFICE

In Re Patent Application of:	)	
	)	Examiner: Ryan F. Pitaro
Magnus Goertz	)	
	)	Art Unit: 2171
Application No: 10/315,250	)	
	)	
Filed: December 10, 2002	)	
	)	
For: USER INTERFACE	)	
	)	

Commissioner for Patents
P. O. Box 1450
Alexandria, VA 22313-1450

COMMENTS ON STATEMENT OF REASONS FOR ALLOWANCE

In the Notice of Allowability mailed December 1, 2011, the Examiner allowed claims **1** – **14**, **18**, **48** and **49**. Applicant acknowledges the Examiner's statements of Reasons for Allowance of the above-referenced patent application and agrees that the claimed subject matter is patentable. However, applicant takes no position regarding the Reasons for Allowance presented by the Examiner other than the positions applicant may have previously taken during prosecution. Therefore, the Examiner's Reasons for Allowance should not be attributed to applicant as an indication of the basis for applicant's belief that the claims are patentable. Furthermore, applicant respectfully asserts that there may also be additional reasons for patentability of the claimed subject matter not explicitly stated in this record and applicant does not waive his rights to such arguments by not further addressing such reasons herein.

Respectfully submitted,

SOQUEL GROUP LLC

Dated: December 4, 2011

/Marc A. Berger/
Marc A. Berger
Reg. No. 44,029

P.O. Box 691
Soquel, CA 95073
(831) 426-8200
Customer No. 75660

PART B - FEE(S) TRANSMITTAL

Complete and send this form, together with applicable fee(s), to: Mail **Mail Stop ISSUE FEE**
Commissioner for Patents
P.O. Box 1450
Alexandria, Virginia 22313-1450
or Fax (571)-273-2885

INSTRUCTIONS: This form should be used for transmitting the ISSUE FEE and PUBLICATION FEE (if required). Blocks 1 through 5 should be completed where appropriate. All further correspondence including the Patent, advance orders and notification of maintenance fees will be mailed to the current correspondence address as indicated unless corrected below or directed otherwise in Block 1, by (a) specifying a new correspondence address; and/or (b) indicating a separate "FEE ADDRESS" for maintenance fee notifications.

CURRENT CORRESPONDENCE ADDRESS (Note: Use Block 1 for any change of address)

75660 7590 12/01/2011
Soquel Group, LLC
P.O. Box 691
Soquel, CA 95073

Note: A certificate of mailing can only be used for domestic mailings of the Fee(s) Transmittal. This certificate cannot be used for any other accompanying papers. Each additional paper, such as an assignment or formal drawing, must have its own certificate of mailing or transmission.

Certificate of Mailing or Transmission
I hereby certify that this Fee(s) Transmittal is being deposited with the United States Postal Service with sufficient postage for first class mail in an envelope addressed to the Mail Stop ISSUE FEE address above, or being facsimile transmitted to the USPTO (571) 273-2885, on the date indicated below.

(Depositor's name)
(Signature)
(Date)

APPLICATION NO.	FILING DATE	FIRST NAMED INVENTOR	ATTORNEY DOCKET NO.	CONFIRMATION NO.
10/315,250	12/10/2002	Magnus Goertz	NEONODE.P004	1226

TITLE OF INVENTION: USER INTERFACE

APPLN. TYPE	SMALL ENTITY	ISSUE FEE DUE	PUBLICATION FEE DUE	PREV. PAID ISSUE FEE	TOTAL FEE(S) DUE	DATE DUE
nonprovisional	YES	$870	$300	$0	$1170	03/01/2012

EXAMINER	ART UNIT	CLASS-SUBCLASS
PITARO, RYAN F	2171	715-716000

1. Change of correspondence address or indication of "Fee Address" (37 CFR 1.363).
☐ Change of correspondence address (or Change of Correspondence Address form PTO/SB/122) attached.
☐ "Fee Address" indication (or "Fee Address" Indication form PTO/SB/47; Rev 03-02 or more recent) attached. **Use of a Customer Number is required.**

2. For printing on the patent front page, list
(1) the names of up to 3 registered patent attorneys or agents OR, alternatively,
(2) the name of a single firm (having as a member a registered attorney or agent) and the names of up to 2 registered patent attorneys or agents. If no name is listed, no name will be printed.
1 Sequel Group LLC
2
3

3. ASSIGNEE NAME AND RESIDENCE DATA TO BE PRINTED ON THE PATENT (print or type)

PLEASE NOTE: Unless an assignee is identified below, no assignee data will appear on the patent. If an assignee is identified below, the document has been filed for recordation as set forth in 37 CFR 3.11. Completion of this form is NOT a substitute for filing an assignment.

(A) NAME OF ASSIGNEE: Neonode Inc.
(B) RESIDENCE: (CITY and STATE OR COUNTRY): Santa Clara, CA

Please check the appropriate assignee category or categories (will not be printed on the patent): ☐ Individual ☒ Corporation or other private group entity ☐ Government

4a. The following fee(s) are submitted:
☒ Issue Fee
☒ Publication Fee (No small entity discount permitted)
☐ Advance Order - # of Copies _____

4b. Payment of Fee(s): **(Please first reapply any previously paid issue fee shown above)**
☐ A check is enclosed.
☐ Payment by credit card. Form PTO-2038 is attached.
☐ The Director is hereby authorized to charge the required fee(s), any deficiency, or credit any overpayment, to Deposit Account Number _____ (enclose an extra copy of this form).

5. **Change in Entity Status** (from status indicated above)
☐ a. Applicant claims SMALL ENTITY status. See 37 CFR 1.27.
☒ b. Applicant is no longer claiming SMALL ENTITY status. See 37 CFR 1.27(g)(2).

NOTE: The Issue Fee and Publication Fee (if required) will not be accepted from anyone other than the applicant; a registered attorney or agent; or the assignee or other party in interest as shown by the records of the United States Patent and Trademark Office.

Authorized Signature M. A. Berger
Typed or printed name Marc A. Berger
Date December 4, 2011
Registration No. 44029

This collection of information is required by 37 CFR 1.311. The information is required to obtain or retain a benefit by the public which is to file (and by the USPTO to process) an application. Confidentiality is governed by 35 U.S.C. 122 and 37 CFR 1.14. This collection is estimated to take 12 minutes to complete, including gathering, preparing, and submitting the completed application form to the USPTO. Time will vary depending upon the individual case. Any comments on the amount of time you require to complete this form and/or suggestions for reducing this burden, should be sent to the Chief Information Officer, U.S. Patent and Trademark Office, U.S. Department of Commerce, P.O. Box 1450, Alexandria, Virginia 22313-1450. DO NOT SEND FEES OR COMPLETED FORMS TO THIS ADDRESS. SEND TO: Commissioner for Patents, P.O. Box 1450, Alexandria, Virginia 22313-1450.

Under the Paperwork Reduction Act of 1995, no persons are required to respond to a collection of information unless it displays a valid OMB control number.

Electronic Patent Application Fee Transmittal	
Application Number:	10315250
Filing Date:	10-Dec-2002
Title of Invention:	USER INTERFACE
First Named Inventor/Applicant Name:	Magnus Goertz
Filer:	Marc Aron Berger
Attorney Docket Number:	NEONODE.P004
Filed as Large Entity	

Utility under 35 USC 111(a) Filing Fees

Description	Fee Code	Quantity	Amount	Sub-Total in USD($)
Basic Filing:				
Pages:				
Claims:				
Miscellaneous-Filing:				
Petition:				
Patent-Appeals-and-Interference:				
Post-Allowance-and-Post-Issuance:				
Utility Appl issue fee	1501	1	1740	1740
Publ. Fee- early, voluntary, or normal	1504	1	300	300

Description	Fee Code	Quantity	Amount	Sub-Total in USD($)
Extension-of-Time:				
Miscellaneous:				
			Total in USD ($)	**2040**

Electronic Acknowledgement Receipt

EFS ID:	11537894
Application Number:	10315250
International Application Number:	
Confirmation Number:	1226
Title of Invention:	USER INTERFACE
First Named Inventor/Applicant Name:	Magnus Goertz
Customer Number:	75660
Filer:	Marc Aron Berger
Filer Authorized By:	
Attorney Docket Number:	NEONODE.P004
Receipt Date:	04-DEC-2011
Filing Date:	10-DEC-2002
Time Stamp:	08:09:12
Application Type:	Utility under 35 USC 111(a)

Payment information:

Submitted with Payment	no

File Listing:

Document Number	Document Description	File Name	File Size(Bytes)/ Message Digest	Multi Part /.zip	Pages (if appl.)
1	Issue Fee Payment (PTO-85B)	NEONODE-P004_FeeTransmittal_12-04-2011.pdf	1639128 7bfec90db0f48a3a78303af2ba19fc80eb0a4a73	no	1
Warnings:					
Information:					

2	Fee Worksheet (SB06)	fee-info.pdf	31570 e9b615149a10803d89a941ef5424db36fce24010	no	2
Warnings:					
Information:					
			Total Files Size (in bytes):	1670698	

This Acknowledgement Receipt evidences receipt on the noted date by the USPTO of the indicated documents, characterized by the applicant, and including page counts, where applicable. It serves as evidence of receipt similar to a Post Card, as described in MPEP 503.

New Applications Under 35 U.S.C. 111
If a new application is being filed and the application includes the necessary components for a filing date (see 37 CFR 1.53(b)-(d) and MPEP 506), a Filing Receipt (37 CFR 1.54) will be issued in due course and the date shown on this Acknowledgement Receipt will establish the filing date of the application.

National Stage of an International Application under 35 U.S.C. 371
If a timely submission to enter the national stage of an international application is compliant with the conditions of 35 U.S.C. 371 and other applicable requirements a Form PCT/DO/EO/903 indicating acceptance of the application as a national stage submission under 35 U.S.C. 371 will be issued in addition to the Filing Receipt, in due course.

New International Application Filed with the USPTO as a Receiving Office
If a new international application is being filed and the international application includes the necessary components for an international filing date (see PCT Article 11 and MPEP 1810), a Notification of the International Application Number and of the International Filing Date (Form PCT/RO/105) will be issued in due course, subject to prescriptions concerning national security, and the date shown on this Acknowledgement Receipt will establish the international filing date of the application.

PART B - FEE(S) TRANSMITTAL

Complete and send this form, together with applicable fee(s), to: Mail **Mail Stop ISSUE FEE**
Commissioner for Patents
P.O. Box 1450
Alexandria, Virginia 22313-1450
or Fax (571)-273-2885

INSTRUCTIONS: This form should be used for transmitting the ISSUE FEE and PUBLICATION FEE (if required). Blocks 1 through 5 should be completed where appropriate. All further correspondence including the Patent, advance orders and notification of maintenance fees will be mailed to the current correspondence address as indicated unless corrected below or directed otherwise in Block 1, by (a) specifying a new correspondence address; and/or (b) indicating a separate "FEE ADDRESS" for maintenance fee notifications.

CURRENT CORRESPONDENCE ADDRESS (Note: Use Block 1 for any change of address)

75660 7590 12/01/2011
Soquel Group, LLC
P.O. Box 691
Soquel, CA 95073

Note: A certificate of mailing can only be used for domestic mailings of the Fee(s) Transmittal. This certificate cannot be used for any other accompanying papers. Each additional paper, such as an assignment or formal drawing, must have its own certificate of mailing or transmission.

Certificate of Mailing or Transmission
I hereby certify that this Fee(s) Transmittal is being deposited with the United States Postal Service with sufficient postage for first class mail in an envelope addressed to the Mail Stop ISSUE FEE address above, or being facsimile transmitted to the USPTO (571) 273-2885, on the date indicated below.

(Depositor's name)
(Signature)
(Date)

APPLICATION NO.	FILING DATE	FIRST NAMED INVENTOR	ATTORNEY DOCKET NO.	CONFIRMATION NO.
10/315,250	12/10/2002	Magnus Goertz	NEONODE.P004	1226

TITLE OF INVENTION: USER INTERFACE

APPLN. TYPE	SMALL ENTITY	ISSUE FEE DUE	PUBLICATION FEE DUE	PREV. PAID ISSUE FEE	TOTAL FEE(S) DUE	DATE DUE
nonprovisional	YES	$870	$300	$0	$1170	03/01/2012

EXAMINER	ART UNIT	CLASS-SUBCLASS
PITARO, RYAN F	2171	715-716000

1. Change of correspondence address or indication of "Fee Address" (37 CFR 1.363).
☐ Change of correspondence address (or Change of Correspondence Address form PTO/SB/122) attached.
☐ "Fee Address" indication (or "Fee Address" Indication form PTO/SB/47; Rev 03-02 or more recent) attached. **Use of a Customer Number is required.**

2. For printing on the patent front page, list
(1) the names of up to 3 registered patent attorneys or agents OR, alternatively,
(2) the name of a single firm (having as a member a registered attorney or agent) and the names of up to 2 registered patent attorneys or agents. If no name is listed, no name will be printed.
1 Sequel Group LLC
2
3

3. ASSIGNEE NAME AND RESIDENCE DATA TO BE PRINTED ON THE PATENT (print or type)

PLEASE NOTE: Unless an assignee is identified below, no assignee data will appear on the patent. If an assignee is identified below, the document has been filed for recordation as set forth in 37 CFR 3.11. Completion of this form is NOT a substitute for filing an assignment.

(A) NAME OF ASSIGNEE: Neonode Inc.
(B) RESIDENCE: (CITY and STATE OR COUNTRY): Santa Clara, CA

Please check the appropriate assignee category or categories (will not be printed on the patent): ☐ Individual ☒ Corporation or other private group entity ☐ Government

4a. The following fee(s) are submitted:
☒ Issue Fee
☒ Publication Fee (No small entity discount permitted)
☐ Advance Order - # of Copies _____

4b. Payment of Fee(s): **(Please first reapply any previously paid issue fee shown above)**
☐ A check is enclosed.
☐ Payment by credit card. Form PTO-2038 is attached.
☐ The Director is hereby authorized to charge the required fee(s), any deficiency, or credit any overpayment, to Deposit Account Number _____ (enclose an extra copy of this form).

5. **Change in Entity Status** (from status indicated above)
☐ a. Applicant claims SMALL ENTITY status. See 37 CFR 1.27.
☒ b. Applicant is no longer claiming SMALL ENTITY status. See 37 CFR 1.27(g)(2).

NOTE: The Issue Fee and Publication Fee (if required) will not be accepted from anyone other than the applicant; a registered attorney or agent; or the assignee or other party in interest as shown by the records of the United States Patent and Trademark Office.

Authorized Signature Marc A. Berger
Typed or printed name Marc A. Berger
Date December 4, 2011
Registration No. 44029

This collection of information is required by 37 CFR 1.311. The information is required to obtain or retain a benefit by the public which is to file (and by the USPTO to process) an application. Confidentiality is governed by 35 U.S.C. 122 and 37 CFR 1.14. This collection is estimated to take 12 minutes to complete, including gathering, preparing, and submitting the completed application form to the USPTO. Time will vary depending upon the individual case. Any comments on the amount of time you require to complete this form and/or suggestions for reducing this burden, should be sent to the Chief Information Officer, U.S. Patent and Trademark Office, U.S. Department of Commerce, P.O. Box 1450, Alexandria, Virginia 22313-1450. DO NOT SEND FEES OR COMPLETED FORMS TO THIS ADDRESS. SEND TO: Commissioner for Patents, P.O. Box 1450, Alexandria, Virginia 22313-1450.

Under the Paperwork Reduction Act of 1995, no persons are required to respond to a collection of information unless it displays a valid OMB control number.

Electronic Patent Application Fee Transmittal

Application Number:	10315250
Filing Date:	10-Dec-2002
Title of Invention:	USER INTERFACE
First Named Inventor/Applicant Name:	Magnus Goertz
Filer:	Marc Aron Berger
Attorney Docket Number:	NEONODE.P004

Filed as Large Entity

Utility under 35 USC 111(a) Filing Fees

Description	Fee Code	Quantity	Amount	Sub-Total in USD($)
Basic Filing:				
Pages:				
Claims:				
Miscellaneous-Filing:				
Petition:				
Patent-Appeals-and-Interference:				
Post-Allowance-and-Post-Issuance:				
Utility Appl issue fee	1501	1	1740	1740
Publ. Fee- early, voluntary, or normal	1504	1	300	300

Description	Fee Code	Quantity	Amount	Sub-Total in USD($)
Extension-of-Time:				
Miscellaneous:				
			Total in USD ($)	**2040**

Electronic Acknowledgement Receipt	
EFS ID:	11538121
Application Number:	10315250
International Application Number:	
Confirmation Number:	1226
Title of Invention:	USER INTERFACE
First Named Inventor/Applicant Name:	Magnus Goertz
Customer Number:	75660
Filer:	Marc Aron Berger
Filer Authorized By:	
Attorney Docket Number:	NEONODE.P004
Receipt Date:	04-DEC-2011
Filing Date:	10-DEC-2002
Time Stamp:	17:58:50
Application Type:	Utility under 35 USC 111(a)

Payment information:

Submitted with Payment	no

File Listing:

Document Number	Document Description	File Name	File Size(Bytes)/ Message Digest	Multi Part /.zip	Pages (if appl.)
1	Issue Fee Payment (PTO-85B)	NEONODE-P004_FeeTransmittal_12-04-2011.pdf	1639128 7bfec90db0f48a3a78303af2ba19fc80eb0a4a73	no	1
Warnings:					
Information:					

2	Fee Worksheet (SB06)	fee-info.pdf	31570 c73a229fc00d6bfe1cf1504e1d2035af7c84fb98	no	2
Warnings:					
Information:					
			Total Files Size (in bytes):	1670698	

This Acknowledgement Receipt evidences receipt on the noted date by the USPTO of the indicated documents, characterized by the applicant, and including page counts, where applicable. It serves as evidence of receipt similar to a Post Card, as described in MPEP 503.

New Applications Under 35 U.S.C. 111
If a new application is being filed and the application includes the necessary components for a filing date (see 37 CFR 1.53(b)-(d) and MPEP 506), a Filing Receipt (37 CFR 1.54) will be issued in due course and the date shown on this Acknowledgement Receipt will establish the filing date of the application.

National Stage of an International Application under 35 U.S.C. 371
If a timely submission to enter the national stage of an international application is compliant with the conditions of 35 U.S.C. 371 and other applicable requirements a Form PCT/DO/EO/903 indicating acceptance of the application as a national stage submission under 35 U.S.C. 371 will be issued in addition to the Filing Receipt, in due course.

New International Application Filed with the USPTO as a Receiving Office
If a new international application is being filed and the international application includes the necessary components for an international filing date (see PCT Article 11 and MPEP 1810), a Notification of the International Application Number and of the International Filing Date (Form PCT/RO/105) will be issued in due course, subject to prescriptions concerning national security, and the date shown on this Acknowledgement Receipt will establish the international filing date of the application.

B

PART B - FEE(S) TRANSMITTAL

Complete and send this form, together with applicable fee(s), to: Mail Mail Stop ISSUE FEE
Commissioner for Patents
P.O. Box 1450
Alexandria, Virginia 22313-1450
or Fax (571)-273-2885

INSTRUCTIONS: This form should be used for transmitting the ISSUE FEE and PUBLICATION FEE (if required). Blocks 1 through 5 should be completed where appropriate. All further correspondence including the Patent, advance orders and notification of maintenance fees will be mailed to the current correspondence address as indicated unless corrected below or directed otherwise in Block 1, by (a) specifying a new correspondence address; and/or (b) indicating a separate "FEE ADDRESS" for maintenance fee notifications.

CURRENT CORRESPONDENCE ADDRESS (Note: Use Block 1 for any change of address)

75660 7590 12/01/2011
Soquel Group, LLC
P.O. Box 691
Soquel, CA 95073

OPAP IAP25 DEC 04 2011 PATENT & TRADEMARK OFFICE

Note: A certificate of mailing can only be used for domestic mailings of the Fee(s) Transmittal. This certificate cannot be used for any other accompanying papers. Each additional paper, such as an assignment or formal drawing, must have its own certificate of mailing or transmission.

Certificate of Mailing or Transmission
I hereby certify that this Fee(s) Transmittal is being deposited with the United States Postal Service with sufficient postage for first class mail in an envelope addressed to the Mail Stop ISSUE FEE address above, or being facsimile transmitted to the USPTO (571) 273-2885, on the date indicated below.

(Depositor's name)
(Signature)
(Date)

APPLICATION NO.	FILING DATE	FIRST NAMED INVENTOR	ATTORNEY DOCKET NO.	CONFIRMATION NO.
10/315,250	12/10/2002	Magnus Goertz	NEONODE.P004	1226

TITLE OF INVENTION: USER INTERFACE

APPLN. TYPE	SMALL ENTITY	ISSUE FEE DUE	PUBLICATION FEE DUE	PREV. PAID ISSUE FEE	TOTAL FEE(S) DUE	DATE DUE
nonprovisional	YES	$870	$300	$0	$1170	03/01/2012

EXAMINER	ART UNIT	CLASS-SUBCLASS
PITARO, RYAN F	2171	715-716000

1. Change of correspondence address or indication of "Fee Address" (37 CFR 1.363).
☐ Change of correspondence address (or Change of Correspondence Address form PTO/SB/122) attached.
☐ "Fee Address" indication (or "Fee Address" Indication form PTO/SB/47; Rev 03-02 or more recent) attached. **Use of a Customer Number is required.**

2. For printing on the patent front page, list
(1) the names of up to 3 registered patent attorneys or agents OR, alternatively,
(2) the name of a single firm (having as a member a registered attorney or agent) and the names of up to 2 registered patent attorneys or agents. If no name is listed, no name will be printed.
1 Soquel Group LLC
2
3

3. ASSIGNEE NAME AND RESIDENCE DATA TO BE PRINTED ON THE PATENT (print or type)

PLEASE NOTE: Unless an assignee is identified below, no assignee data will appear on the patent. If an assignee is identified below, the document has been filed for recordation as set forth in 37 CFR 3.11. Completion of this form is NOT a substitute for filing an assignment.

(A) NAME OF ASSIGNEE: Neonode Inc.
(B) RESIDENCE: (CITY and STATE OR COUNTRY): Santa Clara, CA

Please check the appropriate assignee category or categories (will not be printed on the patent): ☐ Individual ☒ Corporation or other private group entity ☐ Government

4a. The following fee(s) are submitted:
☒ Issue Fee
☒ Publication Fee (No small entity discount permitted)
☐ Advance Order - # of Copies _____

4b. Payment of Fee(s): **(Please first reapply any previously paid issue fee shown above)**
☐ A check is enclosed.
☐ Payment by credit card. Form PTO-2038 is attached.
☐ The Director is hereby authorized to charge the required fee(s), any deficiency, or credit any overpayment, to Deposit Account Number _____ (enclose an extra copy of this form).

5. **Change in Entity Status** (from status indicated above)
☐ a. Applicant claims SMALL ENTITY status. See 37 CFR 1.27.
☒ b. Applicant is no longer claiming SMALL ENTITY status. See 37 CFR 1.27(g)(2).

NOTE: The Issue Fee and Publication Fee (if required) will not be accepted from anyone other than the applicant; a registered attorney or agent; or the assignee or other party in interest as shown by the records of the United States Patent and Trademark Office.

Authorized Signature M. A. Berger
Typed or printed name Marc A. Berger
Date December 4, 2011
Registration No. 44029

This collection of information is required by 37 CFR 1.311. The information is required to obtain or retain a benefit by the public which is to file (and by the USPTO to process) an application. Confidentiality is governed by 35 U.S.C. 122 and 37 CFR 1.14. This collection is estimated to take 12 minutes to complete, including gathering, preparing, and submitting the completed application form to the USPTO. Time will vary depending upon the individual case. Any comments on the amount of time you require to complete this form and/or suggestions for reducing this burden, should be sent to the Chief Information Officer, U.S. Patent and Trademark Office, U.S. Department of Commerce, P.O. Box 1450, Alexandria, Virginia 22313-1450. DO NOT SEND FEES OR COMPLETED FORMS TO THIS ADDRESS. SEND TO: Commissioner for Patents, P.O. Box 1450, Alexandria, Virginia 22313-1450.

Under the Paperwork Reduction Act of 1995, no persons are required to respond to a collection of information unless it displays a valid OMB control number.

12/05/2011 INTEFSW 00007645 10315250
01 FC:1501 1740.00 OP
02 FC:1504 300.00 OP

B

PART B - FEE(S) TRANSMITTAL

Complete and send this form, together with applicable fee(s), to: Mail Mail Stop ISSUE FEE
Commissioner for Patents
P.O. Box 1450
Alexandria, Virginia 22313-1450
or Fax (571)-273-2885

INSTRUCTIONS: This form should be used for transmitting the ISSUE FEE and PUBLICATION FEE (if required). Blocks 1 through 5 should be completed where appropriate. All further correspondence including the Patent, advance orders and notification of maintenance fees will be mailed to the current correspondence address as indicated unless corrected below or directed otherwise in Block 1, by (a) specifying a new correspondence address; and/or (b) indicating a separate "FEE ADDRESS" for maintenance fee notifications.

CURRENT CORRESPONDENCE ADDRESS (Note: Use Block 1 for any change of address)

75660 7590 12/01/2011

Soquel Group, LLC
P.O. Box 691
Soquel, CA 95073

OPAP IAP25 DEC 04 2011 PATENT & TRADEMARK OFFICE

Note: A certificate of mailing can only be used for domestic mailings of the Fee(s) Transmittal. This certificate cannot be used for any other accompanying papers. Each additional paper, such as an assignment or formal drawing, must have its own certificate of mailing or transmission.

Certificate of Mailing or Transmission

I hereby certify that this Fee(s) Transmittal is being deposited with the United States Postal Service with sufficient postage for first class mail in an envelope addressed to the Mail Stop ISSUE FEE address above, or being facsimile transmitted to the USPTO (571) 273-2885, on the date indicated below.

(Depositor's name)
(Signature)
(Date)

APPLICATION NO.	FILING DATE	FIRST NAMED INVENTOR	ATTORNEY DOCKET NO.	CONFIRMATION NO.
10/315,250	12/10/2002	Magnus Goertz	NEONODE.P004	1226

TITLE OF INVENTION: USER INTERFACE

APPLN. TYPE	SMALL ENTITY	ISSUE FEE DUE	PUBLICATION FEE DUE	PREV. PAID ISSUE FEE	TOTAL FEE(S) DUE	DATE DUE
nonprovisional	YES	$870	$300	$0	$1170	03/01/2012

EXAMINER	ART UNIT	CLASS-SUBCLASS
PITARO, RYAN F	2171	715-716000

1. Change of correspondence address or indication of "Fee Address" (37 CFR 1.363).
- ☐ Change of correspondence address (or Change of Correspondence Address form PTO/SB/122) attached.
- ☐ "Fee Address" indication (or "Fee Address" Indication form PTO/SB/47; Rev 03-02 or more recent) attached. **Use of a Customer Number is required.**

2. For printing on the patent front page, list
(1) the names of up to 3 registered patent attorneys or agents OR, alternatively,
(2) the name of a single firm (having as a member a registered attorney or agent) and the names of up to 2 registered patent attorneys or agents. If no name is listed, no name will be printed.

1 Soquel Group LLC
2
3

3. ASSIGNEE NAME AND RESIDENCE DATA TO BE PRINTED ON THE PATENT (print or type)

PLEASE NOTE: Unless an assignee is identified below, no assignee data will appear on the patent. If an assignee is identified below, the document has been filed for recordation as set forth in 37 CFR 3.11. Completion of this form is NOT a substitute for filing an assignment.

(A) NAME OF ASSIGNEE: Neonode Inc.

(B) RESIDENCE: (CITY and STATE OR COUNTRY): Santa Clara, CA

Please check the appropriate assignee category or categories (will not be printed on the patent): ☐ Individual ☒ Corporation or other private group entity ☐ Government

4a. The following fee(s) are submitted:
- ☒ Issue Fee
- ☒ Publication Fee (No small entity discount permitted)
- ☐ Advance Order - # of Copies _____

4b. Payment of Fee(s): **(Please first reapply any previously paid issue fee shown above)**
- ☐ A check is enclosed.
- ☐ Payment by credit card. Form PTO-2038 is attached.
- ☐ The Director is hereby authorized to charge the required fee(s), any deficiency, or credit any overpayment, to Deposit Account Number _____ (enclose an extra copy of this form).

5. **Change in Entity Status** (from status indicated above)
- ☐ a. Applicant claims SMALL ENTITY status. See 37 CFR 1.27.
- ☒ b. Applicant is no longer claiming SMALL ENTITY status. See 37 CFR 1.27(g)(2).

NOTE: The Issue Fee and Publication Fee (if required) will not be accepted from anyone other than the applicant; a registered attorney or agent; or the assignee or other party in interest as shown by the records of the United States Patent and Trademark Office.

Authorized Signature Marc A. Berger Date December 4, 2011

Typed or printed name Marc A. Berger Registration No. 44029

This collection of information is required by 37 CFR 1.311. The information is required to obtain or retain a benefit by the public which is to file (and by the USPTO to process) an application. Confidentiality is governed by 35 U.S.C. 122 and 37 CFR 1.14. This collection is estimated to take 12 minutes to complete, including gathering, preparing, and submitting the completed application form to the USPTO. Time will vary depending upon the individual case. Any comments on the amount of time you require to complete this form and/or suggestions for reducing this burden, should be sent to the Chief Information Officer, U.S. Patent and Trademark Office, U.S. Department of Commerce, P.O. Box 1450, Alexandria, Virginia 22313-1450. DO NOT SEND FEES OR COMPLETED FORMS TO THIS ADDRESS. SEND TO: Commissioner for Patents, P.O. Box 1450, Alexandria, Virginia 22313-1450.

Under the Paperwork Reduction Act of 1995, no persons are required to respond to a collection of information unless it displays a valid OMB control number.

12/05/2011 INTEFSW 00007645 10315250
01 FC:1501 1740.00 OP
02 FC:1504 300.00 OP

B

PART B - FEE(S) TRANSMITTAL

Complete and send this form, together with applicable fee(s), to: Mail Mail Stop ISSUE FEE
Commissioner for Patents
P.O. Box 1450
Alexandria, Virginia 22313-1450
or Fax (571)-273-2885

INSTRUCTIONS: This form should be used for transmitting the ISSUE FEE and PUBLICATION FEE (if required). Blocks 1 through 5 should be completed where appropriate. All further correspondence including the Patent, advance orders and notification of maintenance fees will be mailed to the current correspondence address as indicated unless corrected below or directed otherwise in Block 1, by (a) specifying a new correspondence address; and/or (b) indicating a separate "FEE ADDRESS" for maintenance fee notifications.

CURRENT CORRESPONDENCE ADDRESS (Note: Use Block 1 for any change of address)

75660 7590 12/01/2011

Soquel Group, LLC
P.O. Box 691
Soquel, CA 95073

Note: A certificate of mailing can only be used for domestic mailings of the Fee(s) Transmittal. This certificate cannot be used for any other accompanying papers. Each additional paper, such as an assignment or formal drawing, must have its own certificate of mailing or transmission.

Certificate of Mailing or Transmission

I hereby certify that this Fee(s) Transmittal is being deposited with the United States Postal Service with sufficient postage for first class mail in an envelope addressed to the Mail Stop ISSUE FEE address above, or being facsimile transmitted to the USPTO (571) 273-2885, on the date indicated below.

(Depositor's name)
(Signature)
(Date)

APPLICATION NO.	FILING DATE	FIRST NAMED INVENTOR	ATTORNEY DOCKET NO.	CONFIRMATION NO.
10/315,250	12/10/2002	Magnus Goertz	NEONODE.P004	1226

TITLE OF INVENTION: USER INTERFACE

APPLN. TYPE	SMALL ENTITY	ISSUE FEE DUE	PUBLICATION FEE DUE	PREV. PAID ISSUE FEE	TOTAL FEE(S) DUE	DATE DUE
nonprovisional	YES	$870	$300	$0	$1170	03/01/2012

EXAMINER	ART UNIT	CLASS-SUBCLASS
PITARO, RYAN F	2171	715-716000

1. Change of correspondence address or indication of "Fee Address" (37 CFR 1.363).
- ☐ Change of correspondence address (or Change of Correspondence Address form PTO/SB/122) attached.
- ☐ "Fee Address" indication (or "Fee Address" Indication form PTO/SB/47; Rev 03-02 or more recent) attached. **Use of a Customer Number is required.**

2. For printing on the patent front page, list
(1) the names of up to 3 registered patent attorneys or agents OR, alternatively,
(2) the name of a single firm (having as a member a registered attorney or agent) and the names of up to 2 registered patent attorneys or agents. If no name is listed, no name will be printed.

1 Soquel Group LLC
2
3

3. ASSIGNEE NAME AND RESIDENCE DATA TO BE PRINTED ON THE PATENT (print or type)

PLEASE NOTE: Unless an assignee is identified below, no assignee data will appear on the patent. If an assignee is identified below, the document has been filed for recordation as set forth in 37 CFR 3.11. Completion of this form is NOT a substitute for filing an assignment.

(A) NAME OF ASSIGNEE: Neonode Inc.

(B) RESIDENCE: (CITY and STATE OR COUNTRY): Santa Clara, CA

Please check the appropriate assignee category or categories (will not be printed on the patent): ☐ Individual ☒ Corporation or other private group entity ☐ Government

4a. The following fee(s) are submitted:
- ☒ Issue Fee
- ☒ Publication Fee (No small entity discount permitted)
- ☐ Advance Order - # of Copies _____

4b. Payment of Fee(s): **(Please first reapply any previously paid issue fee shown above)**
- ☐ A check is enclosed.
- ☐ Payment by credit card. Form PTO-2038 is attached.
- ☐ The Director is hereby authorized to charge the required fee(s), any deficiency, or credit any overpayment, to Deposit Account Number _____ (enclose an extra copy of this form).

5. **Change in Entity Status** (from status indicated above)
- ☐ a. Applicant claims SMALL ENTITY status. See 37 CFR 1.27.
- ☒ b. Applicant is no longer claiming SMALL ENTITY status. See 37 CFR 1.27(g)(2).

NOTE: The Issue Fee and Publication Fee (if required) will not be accepted from anyone other than the applicant; a registered attorney or agent; or the assignee or other party in interest as shown by the records of the United States Patent and Trademark Office.

Authorized Signature M. A. Berger Date December 4, 2011

Typed or printed name Marc A. Berger Registration No. 44029

This collection of information is required by 37 CFR 1.311. The information is required to obtain or retain a benefit by the public which is to file (and by the USPTO to process) an application. Confidentiality is governed by 35 U.S.C. 122 and 37 CFR 1.14. This collection is estimated to take 12 minutes to complete, including gathering, preparing, and submitting the completed application form to the USPTO. Time will vary depending upon the individual case. Any comments on the amount of time you require to complete this form and/or suggestions for reducing this burden, should be sent to the Chief Information Officer, U.S. Patent and Trademark Office, U.S. Department of Commerce, P.O. Box 1450, Alexandria, Virginia 22313-1450. DO NOT SEND FEES OR COMPLETED FORMS TO THIS ADDRESS. SEND TO: Commissioner for Patents, P.O. Box 1450, Alexandria, Virginia 22313-1450.

Under the Paperwork Reduction Act of 1995, no persons are required to respond to a collection of information unless it displays a valid OMB control number.

12/05/2011 INTEFSW 00007645 10315250

01 FC:1501 1740.00 OP
02 FC:1504 300.00 OP

UNITED STATES PATENT AND TRADEMARK OFFICE

UNITED STATES DEPARTMENT OF COMMERCE
United States Patent and Trademark Office
Address: COMMISSIONER FOR PATENTS
P.O. Box 1450
Alexandria, Virginia 22313-1450
www.uspto.gov

NOTICE OF ALLOWANCE AND FEE(S) DUE

75660 7590 12/01/2011

Soquel Group, LLC
P.O. Box 691
Soquel, CA 95073

EXAMINER	
PITARO, RYAN F	
ART UNIT	PAPER NUMBER
2171	

DATE MAILED: 12/01/2011

APPLICATION NO.	FILING DATE	FIRST NAMED INVENTOR	ATTORNEY DOCKET NO.	CONFIRMATION NO.
10/315,250	12/10/2002	Magnus Goertz	NEONODE.P004	1226

TITLE OF INVENTION: USER INTERFACE

APPLN. TYPE	SMALL ENTITY	ISSUE FEE DUE	PUBLICATION FEE DUE	PREV. PAID ISSUE FEE	TOTAL FEE(S) DUE	DATE DUE
nonprovisional	YES	$870	$300	$0	$1170	03/01/2012

THE APPLICATION IDENTIFIED ABOVE HAS BEEN EXAMINED AND IS ALLOWED FOR ISSUANCE AS A PATENT. PROSECUTION ON THE MERITS IS CLOSED. THIS NOTICE OF ALLOWANCE IS NOT A GRANT OF PATENT RIGHTS. THIS APPLICATION IS SUBJECT TO WITHDRAWAL FROM ISSUE AT THE INITIATIVE OF THE OFFICE OR UPON PETITION BY THE APPLICANT. SEE 37 CFR 1.313 AND MPEP 1308.

THE ISSUE FEE AND PUBLICATION FEE (IF REQUIRED) MUST BE PAID WITHIN THREE MONTHS FROM THE MAILING DATE OF THIS NOTICE OR THIS APPLICATION SHALL BE REGARDED AS ABANDONED. THIS STATUTORY PERIOD CANNOT BE EXTENDED. SEE 35 U.S.C. 151. THE ISSUE FEE DUE INDICATED ABOVE DOES NOT REFLECT A CREDIT FOR ANY PREVIOUSLY PAID ISSUE FEE IN THIS APPLICATION. IF AN ISSUE FEE HAS PREVIOUSLY BEEN PAID IN THIS APPLICATION (AS SHOWN ABOVE), THE RETURN OF PART B OF THIS FORM WILL BE CONSIDERED A REQUEST TO REAPPLY THE PREVIOUSLY PAID ISSUE FEE TOWARD THE ISSUE FEE NOW DUE.

HOW TO REPLY TO THIS NOTICE:

I. Review the SMALL ENTITY status shown above.

If the SMALL ENTITY is shown as YES, verify your current SMALL ENTITY status:

A. If the status is the same, pay the TOTAL FEE(S) DUE shown above.

B. If the status above is to be removed, check box 5b on Part B - Fee(s) Transmittal and pay the PUBLICATION FEE (if required) and twice the amount of the ISSUE FEE shown above, or

If the SMALL ENTITY is shown as NO:

A. Pay TOTAL FEE(S) DUE shown above, or

B. If applicant claimed SMALL ENTITY status before, or is now claiming SMALL ENTITY status, check box 5a on Part B - Fee(s) Transmittal and pay the PUBLICATION FEE (if required) and 1/2 the ISSUE FEE shown above.

II. PART B - FEE(S) TRANSMITTAL, or its equivalent, must be completed and returned to the United States Patent and Trademark Office (USPTO) with your ISSUE FEE and PUBLICATION FEE (if required). If you are charging the fee(s) to your deposit account, section "4b" of Part B - Fee(s) Transmittal should be completed and an extra copy of the form should be submitted. If an equivalent of Part B is filed, a request to reapply a previously paid issue fee must be clearly made, and delays in processing may occur due to the difficulty in recognizing the paper as an equivalent of Part B.

III. All communications regarding this application must give the application number. Please direct all communications prior to issuance to Mail Stop ISSUE FEE unless advised to the contrary.

IMPORTANT REMINDER: Utility patents issuing on applications filed on or after Dec. 12, 1980 may require payment of maintenance fees. It is patentee's responsibility to ensure timely payment of maintenance fees when due.

PART B - FEE(S) TRANSMITTAL

Complete and send this form, together with applicable fee(s), to: Mail **Mail Stop ISSUE FEE**
Commissioner for Patents
P.O. Box 1450
Alexandria, Virginia 22313-1450
or Fax (571)-273-2885

INSTRUCTIONS: This form should be used for transmitting the ISSUE FEE and PUBLICATION FEE (if required). Blocks 1 through 5 should be completed where appropriate. All further correspondence including the Patent, advance orders and notification of maintenance fees will be mailed to the current correspondence address as indicated unless corrected below or directed otherwise in Block 1, by (a) specifying a new correspondence address; and/or (b) indicating a separate "FEE ADDRESS" for maintenance fee notifications.

CURRENT CORRESPONDENCE ADDRESS (Note: Use Block 1 for any change of address)

75660 7590 12/01/2011

Soquel Group, LLC
P.O. Box 691
Soquel, CA 95073

Note: A certificate of mailing can only be used for domestic mailings of the Fee(s) Transmittal. This certificate cannot be used for any other accompanying papers. Each additional paper, such as an assignment or formal drawing, must have its own certificate of mailing or transmission.

Certificate of Mailing or Transmission

I hereby certify that this Fee(s) Transmittal is being deposited with the United States Postal Service with sufficient postage for first class mail in an envelope addressed to the Mail Stop ISSUE FEE address above, or being facsimile transmitted to the USPTO (571) 273-2885, on the date indicated below.

(Depositor's name)
(Signature)
(Date)

APPLICATION NO.	FILING DATE	FIRST NAMED INVENTOR	ATTORNEY DOCKET NO.	CONFIRMATION NO.
10/315,250	12/10/2002	Magnus Goertz	NEONODE.P004	1226

TITLE OF INVENTION: USER INTERFACE

APPLN. TYPE	SMALL ENTITY	ISSUE FEE DUE	PUBLICATION FEE DUE	PREV. PAID ISSUE FEE	TOTAL FEE(S) DUE	DATE DUE
nonprovisional	YES	$870	$300	$0	$1170	03/01/2012

EXAMINER	ART UNIT	CLASS-SUBCLASS
PITARO, RYAN F	2171	715-716000

1. Change of correspondence address or indication of "Fee Address" (37 CFR 1.363).

❑ Change of correspondence address (or Change of Correspondence Address form PTO/SB/122) attached.

❑ "Fee Address" indication (or "Fee Address" Indication form PTO/SB/47; Rev 03-02 or more recent) attached. **Use of a Customer Number is required.**

2. For printing on the patent front page, list

(1) the names of up to 3 registered patent attorneys or agents OR, alternatively,

(2) the name of a single firm (having as a member a registered attorney or agent) and the names of up to 2 registered patent attorneys or agents. If no name is listed, no name will be printed.

1 _____

2 _____

3 _____

3. ASSIGNEE NAME AND RESIDENCE DATA TO BE PRINTED ON THE PATENT (print or type)

PLEASE NOTE: Unless an assignee is identified below, no assignee data will appear on the patent. If an assignee is identified below, the document has been filed for recordation as set forth in 37 CFR 3.11. Completion of this form is NOT a substitute for filing an assignment.

(A) NAME OF ASSIGNEE (B) RESIDENCE: (CITY and STATE OR COUNTRY)

Please check the appropriate assignee category or categories (will not be printed on the patent) : ❑ Individual ❑ Corporation or other private group entity ❑ Government

4a. The following fee(s) are submitted:

❑ Issue Fee

❑ Publication Fee (No small entity discount permitted)

❑ Advance Order - # of Copies _____

4b. Payment of Fee(s): (**Please first reapply any previously paid issue fee shown above**)

❑ A check is enclosed.

❑ Payment by credit card. Form PTO-2038 is attached.

❑ The Director is hereby authorized to charge the required fee(s), any deficiency, or credit any overpayment, to Deposit Account Number _____ (enclose an extra copy of this form).

5. **Change in Entity Status** (from status indicated above)

❑ a. Applicant claims SMALL ENTITY status. See 37 CFR 1.27.

❑ b. Applicant is no longer claiming SMALL ENTITY status. See 37 CFR 1.27(g)(2).

NOTE: The Issue Fee and Publication Fee (if required) will not be accepted from anyone other than the applicant; a registered attorney or agent; or the assignee or other party in interest as shown by the records of the United States Patent and Trademark Office.

Authorized Signature _____ Date _____

Typed or printed name _____ Registration No. _____

This collection of information is required by 37 CFR 1.311. The information is required to obtain or retain a benefit by the public which is to file (and by the USPTO to process) an application. Confidentiality is governed by 35 U.S.C. 122 and 37 CFR 1.14. This collection is estimated to take 12 minutes to complete, including gathering, preparing, and submitting the completed application form to the USPTO. Time will vary depending upon the individual case. Any comments on the amount of time you require to complete this form and/or suggestions for reducing this burden, should be sent to the Chief Information Officer, U.S. Patent and Trademark Office, U.S. Department of Commerce, P.O. Box 1450, Alexandria, Virginia 22313-1450. DO NOT SEND FEES OR COMPLETED FORMS TO THIS ADDRESS. SEND TO: Commissioner for Patents, P.O. Box 1450, Alexandria, Virginia 22313-1450.

Under the Paperwork Reduction Act of 1995, no persons are required to respond to a collection of information unless it displays a valid OMB control number.

UNITED STATES PATENT AND TRADEMARK OFFICE

UNITED STATES DEPARTMENT OF COMMERCE
United States Patent and Trademark Office
Address: COMMISSIONER FOR PATENTS
P.O. Box 1450
Alexandria, Virginia 22313-1450
www.uspto.gov

APPLICATION NO.	FILING DATE	FIRST NAMED INVENTOR	ATTORNEY DOCKET NO.	CONFIRMATION NO.
10/315,250	12/10/2002	Magnus Goertz	NEONODE.P004	1226

75660 7590 12/01/2011

Soquel Group, LLC
P.O. Box 691
Soquel, CA 95073

EXAMINER	
PITARO, RYAN F	
ART UNIT	PAPER NUMBER
2171	

DATE MAILED: 12/01/2011

Determination of Patent Term Adjustment under 35 U.S.C. 154 (b)
(application filed on or after May 29, 2000)

The Patent Term Adjustment to date is 872 day(s). If the issue fee is paid on the date that is three months after the mailing date of this notice and the patent issues on the Tuesday before the date that is 28 weeks (six and a half months) after the mailing date of this notice, the Patent Term Adjustment will be 872 day(s).

If a Continued Prosecution Application (CPA) was filed in the above-identified application, the filing date that determines Patent Term Adjustment is the filing date of the most recent CPA.

Applicant will be able to obtain more detailed information by accessing the Patent Application Information Retrieval (PAIR) WEB site (http://pair.uspto.gov).

Any questions regarding the Patent Term Extension or Adjustment determination should be directed to the Office of Patent Legal Administration at (571)-272-7702. Questions relating to issue and publication fee payments should be directed to the Customer Service Center of the Office of Patent Publication at 1-(888)-786-0101 or (571)-272-4200.

Privacy Act Statement

The Privacy Act of 1974 (P.L. 93-579) requires that you be given certain information in connection with your submission of the attached form related to a patent application or patent. Accordingly, pursuant to the requirements of the Act, please be advised that: (1) the general authority for the collection of this information is 35 U.S.C. 2(b)(2); (2) furnishing of the information solicited is voluntary; and (3) the principal purpose for which the information is used by the U.S. Patent and Trademark Office is to process and/or examine your submission related to a patent application or patent. If you do not furnish the requested information, the U.S. Patent and Trademark Office may not be able to process and/or examine your submission, which may result in termination of proceedings or abandonment of the application or expiration of the patent.

The information provided by you in this form will be subject to the following routine uses:

1. The information on this form will be treated confidentially to the extent allowed under the Freedom of Information Act (5 U.S.C. 552) and the Privacy Act (5 U.S.C 552a). Records from this system of records may be disclosed to the Department of Justice to determine whether disclosure of these records is required by the Freedom of Information Act.
2. A record from this system of records may be disclosed, as a routine use, in the course of presenting evidence to a court, magistrate, or administrative tribunal, including disclosures to opposing counsel in the course of settlement negotiations.
3. A record in this system of records may be disclosed, as a routine use, to a Member of Congress submitting a request involving an individual, to whom the record pertains, when the individual has requested assistance from the Member with respect to the subject matter of the record.
4. A record in this system of records may be disclosed, as a routine use, to a contractor of the Agency having need for the information in order to perform a contract. Recipients of information shall be required to comply with the requirements of the Privacy Act of 1974, as amended, pursuant to 5 U.S.C. 552a(m).
5. A record related to an International Application filed under the Patent Cooperation Treaty in this system of records may be disclosed, as a routine use, to the International Bureau of the World Intellectual Property Organization, pursuant to the Patent Cooperation Treaty.
6. A record in this system of records may be disclosed, as a routine use, to another federal agency for purposes of National Security review (35 U.S.C. 181) and for review pursuant to the Atomic Energy Act (42 U.S.C. 218(c)).
7. A record from this system of records may be disclosed, as a routine use, to the Administrator, General Services, or his/her designee, during an inspection of records conducted by GSA as part of that agency's responsibility to recommend improvements in records management practices and programs, under authority of 44 U.S.C. 2904 and 2906. Such disclosure shall be made in accordance with the GSA regulations governing inspection of records for this purpose, and any other relevant (i.e., GSA or Commerce) directive. Such disclosure shall not be used to make determinations about individuals.
8. A record from this system of records may be disclosed, as a routine use, to the public after either publication of the application pursuant to 35 U.S.C. 122(b) or issuance of a patent pursuant to 35 U.S.C. 151. Further, a record may be disclosed, subject to the limitations of 37 CFR 1.14, as a routine use, to the public if the record was filed in an application which became abandoned or in which the proceedings were terminated and which application is referenced by either a published application, an application open to public inspection or an issued patent.
9. A record from this system of records may be disclosed, as a routine use, to a Federal, State, or local law enforcement agency, if the USPTO becomes aware of a violation or potential violation of law or regulation.

Notice of Allowability	Application No.	Applicant(s)	
	10/315,250	GOERTZ, MAGNUS	
	Examiner	Art Unit	
	RYAN PITARO	2171	

-- The MAILING DATE of this communication appears on the cover sheet with the correspondence address--

All claims being allowable, PROSECUTION ON THE MERITS IS (OR REMAINS) CLOSED in this application. If not included herewith (or previously mailed), a Notice of Allowance (PTOL-85) or other appropriate communication will be mailed in due course. **THIS NOTICE OF ALLOWABILITY IS NOT A GRANT OF PATENT RIGHTS.** This application is subject to withdrawal from issue at the initiative of the Office or upon petition by the applicant. See 37 CFR 1.313 and MPEP 1308.

1. ☒ This communication is responsive to *the amendment filed 6/09/2011*.

2. ☒ The allowed claim(s) is/are *1-14,18,48 and 49*.

3. ☐ Acknowledgment is made of a claim for foreign priority under 35 U.S.C. § 119(a)-(d) or (f).
   a) ☐ All b) ☐ Some* c) ☐ None of the:
      1. ☐ Certified copies of the priority documents have been received.
      2. ☐ Certified copies of the priority documents have been received in Application No. _____ .
      3. ☐ Copies of the certified copies of the priority documents have been received in this national stage application from the International Bureau (PCT Rule 17.2(a)).

   * Certified copies not received: _____.

Applicant has THREE MONTHS FROM THE "MAILING DATE" of this communication to file a reply complying with the requirements noted below. Failure to timely comply will result in ABANDONMENT of this application.
THIS THREE-MONTH PERIOD IS NOT EXTENDABLE.

4. ☐ A SUBSTITUTE OATH OR DECLARATION must be submitted. Note the attached EXAMINER'S AMENDMENT or NOTICE OF INFORMAL PATENT APPLICATION (PTO-152) which gives reason(s) why the oath or declaration is deficient.

5. ☐ CORRECTED DRAWINGS (as "replacement sheets") must be submitted.
   (a) ☐ including changes required by the Notice of Draftsperson's Patent Drawing Review (PTO-948) attached
      1) ☐ hereto or 2) ☐ to Paper No./Mail Date _____.
   (b) ☐ including changes required by the attached Examiner's Amendment / Comment or in the Office action of Paper No./Mail Date _____.

   Identifying indicia such as the application number (see 37 CFR 1.84(c)) should be written on the drawings in the front (not the back) of each sheet. Replacement sheet(s) should be labeled as such in the header according to 37 CFR 1.121(d).

6. ☐ DEPOSIT OF and/or INFORMATION about the deposit of BIOLOGICAL MATERIAL must be submitted. Note the attached Examiner's comment regarding REQUIREMENT FOR THE DEPOSIT OF BIOLOGICAL MATERIAL.

Attachment(s)

1. ☒ Notice of References Cited (PTO-892)
2. ☐ Notice of Draftperson's Patent Drawing Review (PTO-948)
3. ☐ Information Disclosure Statements (PTO/SB/08), Paper No./Mail Date _____
4. ☐ Examiner's Comment Regarding Requirement for Deposit of Biological Material
5. ☐ Notice of Informal Patent Application
6. ☐ Interview Summary (PTO-413), Paper No./Mail Date _____ .
7. ☒ Examiner's Amendment/Comment
8. ☒ Examiner's Statement of Reasons for Allowance
9. ☐ Other _____.

EXAMINER'S AMENDMENT

An examiner's amendment to the record appears below. Should the changes and/or additions be unacceptable to applicant, an amendment may be filed as provided by 37 CFR 1.312. To ensure consideration of such an amendment, it MUST be submitted no later than the payment of the issue fee.

Authorization for this examiner's amendment was given in a telephone interview with Marc Berger on 10/6/2011.

The application has been amended as follows:

1. (currently amended) A non-transitory computer readable medium storing a computer program with computer program code, which, when read by a mobile handheld computer unit, allows the computer to present a user interface for the mobile handheld computer unit, the user interface comprising:

a touch sensitive area in which a representation of a function is provided, wherein the representation consists of only one option for activating the function and wherein the function is activated by a multi-step operation comprising (i) an object touching the touch sensitive area at a location where the representation is provided and then (ii) the object gliding along the touch sensitive area away from the touched location, wherein the representation of the function is not relocated or duplicated during the gliding.

Claims 1-14,18,48-49 are allowed.

The following is an examiner's statement of reasons for allowance: The prior art is silent in teaching a non-transitory computer readable medium storing a computer program with computer program code, which, when read by a mobile handheld computer unit, allows the computer to present a user interface for the mobile handheld computer unit, the user interface comprising: a touch sensitive area in which a representation of a function is provided, wherein the representation consists of only one option for activating the function and wherein the function is activated by a multi-step operation comprising (i) an object touching the touch sensitive area at a location where the representation is provided and then (ii) the object gliding along the touch sensitive area away from the touched location wherein the representation of the function is not relocated or duplicated during the gliding.

Any comments considered necessary by applicant must be submitted no later than the payment of the issue fee and, to avoid processing delays, should preferably accompany the issue fee. Such submissions should be clearly labeled "Comments on Statement of Reasons for Allowance."

Conclusion

Any inquiry concerning this communication or earlier communications from the examiner should be directed to RYAN PITARO whose telephone number is (571)272-

4071. The examiner can normally be reached on 9:00am - 5:30pm Mondays through Fridays.

If attempts to reach the examiner by telephone are unsuccessful, the examiner's supervisor, Chat Do can be reached on 571-272-3721. The fax phone number for the organization where this application or proceeding is assigned is 571-273-8300.

Information regarding the status of an application may be obtained from the Patent Application Information Retrieval (PAIR) system. Status information for published applications may be obtained from either Private PAIR or Public PAIR. Status information for unpublished applications is available through Private PAIR only. For more information about the PAIR system, see http://pair-direct.uspto.gov. Should you have questions on access to the Private PAIR system, contact the Electronic Business Center (EBC) at 866-217-9197 (toll-free). If you would like assistance from a USPTO Customer Service Representative or access to the automated information system, call 800-786-9199 (IN USA OR CANADA) or 571-272-1000.

/Ryan F Pitaro/
Primary Examiner, Art Unit 2171

Notice of References Cited	Application/Control No. 10/315,250	Applicant(s)/Patent Under Reexamination GOERTZ, MAGNUS	
	Examiner RYAN PITARO	Art Unit 2171	Page 1 of 1

U.S. PATENT DOCUMENTS

*		Document Number Country Code-Number-Kind Code	Date MM-YYYY	Name	Classification
*	A	US-7,030,861	04-2006	Westerman et al.	345/173
*	B	US-5,603,053	02-1997	Gough et al.	710/5
	C	US-			
	D	US-			
	E	US-			
	F	US-			
	G	US-			
	H	US-			
	I	US-			
	J	US-			
	K	US-			
	L	US-			
	M	US-			

FOREIGN PATENT DOCUMENTS

*		Document Number Country Code-Number-Kind Code	Date MM-YYYY	Country	Name	Classification
	N					
	O					
	P					
	Q					
	R					
	S					
	T					

NON-PATENT DOCUMENTS

*		Include as applicable: Author, Title Date, Publisher, Edition or Volume, Pertinent Pages)
	U	
	V	
	W	
	X	

*A copy of this reference is not being furnished with this Office action. (See MPEP § 707.05(a).)
Dates in MM-YYYY format are publication dates. Classifications may be US or foreign.

EAST Search History

EAST Search History (Prior Art)

Ref #	Hits	Search Query	DBs	Default Operator	Plurals	Time Stamp
L1	2	"7441196".pn.	US-PGPUB; USPAT; EPO; JPO; DERWENT	OR	OFF	2011/08/28 22:50
L2	818	swipe with screen	US-PGPUB; USPAT; EPO; JPO; DERWENT	OR	ON	2011/08/28 22:50
L3	1099	(glide swipe) with screen	US-PGPUB; USPAT; EPO; JPO; DERWENT	OR	ON	2011/08/28 22:50
L4	2	"7286063".pn.	US-PGPUB; USPAT; EPO; JPO; DERWENT	OR	ON	2011/08/28 22:50
L8	263	("20010003845" | "20010012286" | "20010016947" | "20010034647" | "20010042002" | "20010044751" | "20010049824" | "20010051903" | "20020007309" | "20020010642" | "20020016750" | "20020029339" | "20020032782" | "20020035174" | "20020038256" | "20020038259" | "20020042914" | "20020042921" | "20020049631" | "20020056098" | "20020059590" | "20020067376" | "20020077177" | "20020078006" | "20020078453" | "20020098834" | "20020116292" | "20020116320" | "20020166122" | "20030046182" | "20030074661" | "20030095525" | "20030126607" | "20030140017" | "20030146940" | "20030149628" | "20030182195" | "20040003412" | "20040098747" | "20040103439" | "20040117831" | "20040128137" | "20040133848" | "20040148625" | "20040204116" | "20040210824" | "20040260689" | "20050010949" | "20050025550" | "20050075932" | "20050086690" | "20050091118" | "20050160458" | "20050234895" | "20050246231" | "20060155598" | "20060224987" | "20070008332" | "3586771" | "4650977" | "4706121" | "4992940" | "5041312" | "5064999" | "5119188" | "5236199" | "5321749" |	US-PGPUB; USPAT; USOCR	OR	OFF	2011/08/28 22:50

		"5353016"	"5410326"	"5479268"							
		"5532735"	"5553242"	"5559548"							
		"5598523"	"5602596"	"5617570"							
		"5625781"	"5710887"	"5727129"							
		"5734719"	"5758126"	"5794210"							
		"5796252"	"5801702"	"5809204"							
		"5819220"	"5822014"	"5828839"							
		"5832208"	"5832459"	"5838314"							
		"5848396"	"5851149"	"5874906"							
		"5878222"	"5890175"	"5893064"							
		"5895454"	"5896133"	"5900905"							
		"5902353"	"5903729"	"5911145"							
		"5918014"	"5918213").PN. OR								
		("5925103"	"5931901"	"5935002"							
		"5946381"	"5956681"	"5956693"							
		"5958012"	"5960411"	"5961593"							
		"5978381"	"5990927"	"6002853"							
		"6005562"	"6005631"	"6006257"							
		"6012049"	"6014502"	"6018372"							
		"6025837"	"6028600"	"6031537"							
		"6041312"	"6054989"	"6072483"							
		"6072492"	"6075575"	"6078866"							
		"6091417"	"6094156"	"6101473"							
		"6112186"	"6129274"	"6138107"							
		"6142371"	"6151050"	"6151059"							
		"6151596"	"6151630"	"6154205"							
		"6160552"	"6167382"	"6172677"							
		"6177936"	"6193152"	"6198481"							
		"6199050"	"6199077"	"6199098"							
		"6205432"	"6205582"	"6211878"							
		"6212265"	"6223215"	"6226623"							
		"6226642"	"6229540"	"6237030"							
		"6243093"	"6253189"	"6260192"							
		"6266060"	"6269343"	"6269361"							
		"6269403"	"6271832"	"6282516"							
		"6285357"	"6285987"	"6286017"							
		"6286043"	"6288716"	"6292779"							
		"6292782"	"6292786"	"6292809"							
		"6295057"	"6298330"	"6300947"							
		"6301566"	"6312336"	"6314406"							
		"6317706"	"6330005"	"6330543"							
		"6333753"	"6334108"	"6334145"							
		"6336131"	"6337715"	"6345279"							
		"6356905"	"6381583"	"6388714"							
		"6396531"	"6397387"	"6401132"							
		"6407779"	"6411307"	"6411337"							
		"6415270"	"6417873"	"6418441"							
		"6421066"	"6421071"	"6421724"							
		"6438540"	"6445398"	"6460181"							
		"6476825"	"6477575"	"6484149"							
		"6487189"	"6487586"	"6490555"							
		"6509913"	"6516311"	"6522342"							
		"6532312"	"6535888"	"6570582"							
		"6571279"	"6583800"	"6606103"							
		"6606280"	"6606347").PN. OR								
		("6608633"	"6615247"	"6615248"							
		"6618039"	"6631523"	"6636246"							
		"6647373"	"6662224"	"6680714"							
		"6684062"	"6692358"	"6704727"							
		"6711552"	"6714534"	"6728731"							
		"6769989"	"6804786"	"6826572"							
		"6829646"	"6857102"	"6868525"							
		"6907556"	"6925595"	"6928610"							
		"6938073"	"6973669"	"6978263"							

		"7013435" | "7020845" | "7051281" | "7174512" | "7293276" | "7383515").PN.				
L9	206	touch with slide with function	US-PGPUB; USPAT; USOCR	OR	ON	2011/08/28 22:50
L10	13	("4366475" | "4686332" | "4821030" | "4914624" | "5402151" | "5563632" | "5596346" | "5638060" | "5687331" | "5736974" | "5736976" | "5761485" | "5838973").PN.	US-PGPUB; USPAT; USOCR	OR	OFF	2011/08/28 22:50
L11	190051	object near3 type	US-PGPUB; USPAT; USOCR	OR	OFF	2011/08/28 22:50
L12	5	(file item object) near3 type with open near3 respective	US-PGPUB; USPAT; USOCR	OR	OFF	2011/08/28 22:50
L13	1226	open$3 with different with program	US-PGPUB; USPAT; USOCR	OR	OFF	2011/08/28 22:50
L14	2	multiple near3 file near3 selection with open	US-PGPUB; USPAT; USOCR	OR	ON	2011/08/28 22:50
L15	19	applying with command with (plurality multiple) with files	US-PGPUB; USPAT; USOCR	OR	ON	2011/08/28 22:50
L16	34800	(flick stroke) with (open application command)	US-PGPUB; USPAT; EPO; JPO; DERWENT	OR	OFF	2011/08/28 22:50
L17	379	(flick) with (open application command)	US-PGPUB; USPAT; EPO; JPO; DERWENT	OR	ON	2011/08/28 22:50
L18	132	(flick) with (open application command) and @ay<="2002"	US-PGPUB; USPAT; EPO; JPO; DERWENT	OR	ON	2011/08/28 22:50
L19	5	(flick) with (open application command) and @ay<="2002" and "715"/$.ccls.	US-PGPUB; USPAT; EPO; JPO; DERWENT	OR	ON	2011/08/28 22:50
L20	40	(flick) and @ay<="2002" and "715"/$.ccls.	US-PGPUB; USPAT; EPO; JPO; DERWENT	OR	ON	2011/08/28 22:50
L21	1002	(flick gesture) and @ay<="2002" and "715"/$.ccls.	US-PGPUB; USPAT;	OR	ON	2011/08/28 22:50

			EPO; JPO; DERWENT			
L22	2424	(flick gesture slide) and @ay<="2002" and "715"/$.ccls.	US-PGPUB; USPAT; EPO; JPO; DERWENT	OR	ON	2011/08/28 22:50
L23	80	(flick gesture slide) and @ay<="2002" and "715"/702,864.ccls.	US-PGPUB; USPAT; EPO; JPO; DERWENT	OR	ON	2011/08/28 22:50
L24	6603	finger near3 (flick gesture slide) and @ay<="2002"	US-PGPUB; USPAT; EPO; JPO; DERWENT	OR	ON	2011/08/28 22:50
L25	88	finger near3 (flick gesture slide) and @ay<="2002" and "715"/$.ccls.	US-PGPUB; USPAT; EPO; JPO; DERWENT	OR	ON	2011/08/28 22:50
L26	0	"5543591,5943052,5907327,4686332".pn.	US-PGPUB; USPAT; EPO; JPO; DERWENT	OR	ON	2011/08/28 22:50
L27	9	("5543591" "5943052" "5907327" "4686332").pn.	US-PGPUB; USPAT; EPO; JPO; DERWENT	OR	ON	2011/08/28 22:50
L28	164921	(glide flick touch swipe) with screen	US-PGPUB; USPAT; EPO; JPO; DERWENT	OR	ON	2011/08/28 22:50
L29	24800	(glide flick touch swipe) with screen with (applications functions)	US-PGPUB; USPAT; EPO; JPO; DERWENT	OR	ON	2011/08/28 22:50
L30	100	(glide flick touch swipe) with screen with (applications functions) and "715"/$.ccls. and @AY="2002"	US-PGPUB; USPAT; EPO; JPO; DERWENT	OR	ON	2011/08/28 22:50
L31	450	(glide flick touch swipe) with screen with (applications functions) and "715"/$.ccls. and @AY<="2002"	US-PGPUB; USPAT; EPO; JPO; DERWENT	OR	ON	2011/08/28 22:50
L32	0	(glide flick swipe) with screen with (applications functions) and "715"/$.ccls. and @AY<="2002"	US-PGPUB; USPAT; EPO; JPO; DERWENT	OR	ON	2011/08/28 22:50
L33	11	(glide flick swipe) with screen and "715"/$.ccls. and @AY<="2002"	US-PGPUB; USPAT;	OR	ON	2011/08/28 22:50

			EPO; JPO; DERWENT			
L34	222	(glide flick gesture swipe) with screen and "715"/$.ccls. and @AY<="2002"	US-PGPUB; USPAT; EPO; JPO; DERWENT	OR	ON	2011/08/28 22:50
L35	308	(glide flick swipe) with screen and @AY<="2002"	US-PGPUB; USPAT; EPO; JPO; DERWENT	OR	ON	2011/08/28 22:50
L36	8	(glide flick swipe) with screen with icon and @AY<="2002"	US-PGPUB; USPAT; EPO; JPO; DERWENT	OR	ON	2011/08/28 22:50
L37	16	("20010011308" | "20030142138" | "20040034801" | "20050253817" | "20050253817" | "20050264833" | "5821933" | "5907327" | "6633310").PN.	US-PGPUB; USPAT; EPO; JPO; DERWENT	OR	ON	2011/08/28 22:50
L38	454	(glide flick swipe) with finger and @AY<="2002"	US-PGPUB; USPAT; EPO; JPO; DERWENT	OR	ON	2011/08/28 22:50
L39	3	(glide flick swipe) with finger and @AY<="2002" and "715"/$.ccls.	US-PGPUB; USPAT; EPO; JPO; DERWENT	OR	ON	2011/08/28 22:50
L40	13	("5250929" | "5568604" | "5579036" | "5612719" | "5661476" | "5748185" | "5767457" | "5883617" | "5928304" | "5943043" | "5943044" | "5995083" | "6049328").PN.	US-PGPUB; USPAT; USOCR	OR	OFF	2011/08/28 22:50
L41	1656	715/716.ccls.	US-PGPUB; USPAT; USOCR	OR	OFF	2011/08/28 22:50
L42	12	715/716.ccls. and dvd near menu	US-PGPUB; USPAT; USOCR	OR	OFF	2011/08/28 22:50
L43	15	715/716.ccls. and dvd near menu	US-PGPUB; USPAT; USOCR	OR	ON	2011/08/28 22:50
L44	673	715/716.ccls. and dvd	US-PGPUB; USPAT; USOCR	OR	ON	2011/08/28 22:50
L45	843	715/716.ccls. and menu	US-PGPUB; USPAT; USOCR	OR	ON	2011/08/28 22:50
L46	85	715/716.ccls. and menu and theme	US-PGPUB;	OR	ON	2011/08/28 22:50

			USPAT; USOCR			
L47	439	715/716.ccls. and menu and effects	US-PGPUB; USPAT; USOCR	OR	ON	2011/08/28 22:50
L48	9	715/716.ccls. and menu with theme	US-PGPUB; USPAT; USOCR	OR	ON	2011/08/28 22:50
L49	1	"7200836".pn.	US-PGPUB; USPAT; USOCR	OR	ON	2011/08/28 22:50
L50	1	"20080120546".pn.	US-PGPUB; USPAT; USOCR	OR	ON	2011/08/28 22:50
L51	682	715/864.ccls.	US-PGPUB; USPAT; USOCR	OR	ON	2011/08/28 22:50
L52	98	715/864.ccls. and keyboard and back and icons and files	US-PGPUB; USPAT; USOCR	OR	ON	2011/08/28 22:50
L53	48	715/864.ccls. and keyboard and back and icons and files and removable	US-PGPUB; USPAT; USOCR	OR	ON	2011/08/28 22:50
L54	46	715/864.ccls. and keyboard and icons and files and @ay<="2002"	US-PGPUB; USPAT; USOCR	OR	ON	2011/08/28 22:50
L55	2	"6346935".pn.	US-PGPUB; USPAT; EPO; JPO; DERWENT	OR	OFF	2011/08/28 22:50
L56	22	(glide flick touch swipe) with (coordinat$7) with screen with (applications functions) and "715"/$.ccls. and @AY<="2002"	US-PGPUB; USPAT; EPO; JPO; DERWENT	OR	ON	2011/08/28 22:50
L57	450	(touch finger) with (glide flick touch swipe) with screen with (applications functions) and "715"/$.ccls. and @AY<="2002"	US-PGPUB; USPAT; EPO; JPO; DERWENT	OR	ON	2011/08/28 22:50
L58	0	(touch finger) with (glide flick swipe) with screen with (applications functions) and "715"/$.ccls. and @AY<="2002"	US-PGPUB; USPAT; EPO; JPO; DERWENT	OR	ON	2011/08/28 22:50
L59	3	(touch finger) with (glide flick swipe) with screen and "715"/$.ccls. and @AY<="2002"	US-PGPUB; USPAT; EPO; JPO; DERWENT	OR	ON	2011/08/28 22:50

L60	2	"6140936".pn.	US-PGPUB; USPAT; EPO; JPO; DERWENT	OR	ON	2011/08/28 22:50
L61	2	"6346935".pn.	US-PGPUB; USPAT; EPO; JPO; DERWENT	OR	ON	2011/08/28 22:50
L62	250	files with applications with list with only	US-PGPUB; USPAT; EPO; JPO; DERWENT	OR	ON	2011/08/28 22:50
L63	151	(file near list) with (application near list)	US-PGPUB; USPAT; EPO; JPO; DERWENT	OR	ON	2011/08/28 22:50
L64	672	(file near view) with application	US-PGPUB; USPAT; EPO; JPO; DERWENT	OR	ON	2011/08/28 22:50
L65	21	sort with application near files	US-PGPUB; USPAT; EPO; JPO; DERWENT	OR	ON	2011/08/28 22:50
L66	790	(programs application) with files with (sort show list) with only	US-PGPUB; USPAT; EPO; JPO; DERWENT	OR	ON	2011/08/28 22:50
L67	80	(programs application) with files with (sort show list) with only and "715"/$.ccls.	US-PGPUB; USPAT; EPO; JPO; DERWENT	OR	ON	2011/08/28 22:50
L68	0	seperate with list with data near type	US-PGPUB; USPAT; EPO; JPO; DERWENT	OR	ON	2011/08/28 22:50
L69	7785	list with data near type	US-PGPUB; USPAT; EPO; JPO; DERWENT	OR	ON	2011/08/28 22:50
L70	933	list with data near type and "715"/$.ccls.	US-PGPUB; USPAT; EPO; JPO; DERWENT	OR	ON	2011/08/28 22:50
L71	820	application near list and file near list	US-PGPUB; USPAT; EPO; JPO; DERWENT	OR	ON	2011/08/28 22:50

L72	278	application near list and file near list and @ay<="2002"	US-PGPUB; USPAT; EPO; JPO; DERWENT	OR	ON	2011/08/28 22:50
L73	37	icon with drag with activate	US-PGPUB; USPAT; EPO; JPO; DERWENT	OR	OFF	2011/08/28 22:50
L74	189	icon with drag with activat$7	US-PGPUB; USPAT; EPO; JPO; DERWENT	OR	ON	2011/08/28 22:50
L75	70	icon with drag with activat$7 and @ay<="2002"	US-PGPUB; USPAT; EPO; JPO; DERWENT	OR	ON	2011/08/28 22:50
L76	29	bar with drag with activat$7 and @ay<="2002"	US-PGPUB; USPAT; EPO; JPO; DERWENT	OR	ON	2011/08/28 22:50
L77	83	function with drag with activat$7 and @ay<="2002"	US-PGPUB; USPAT; EPO; JPO; DERWENT	OR	ON	2011/08/28 22:50
L78	31	(dock bar) with (glide swipe) with activat$7	US-PGPUB; USPAT; EPO; JPO; DERWENT	OR	OFF	2011/08/28 22:50
L79	42	(dock bar) with (glide swipe) with activat$7	US-PGPUB; USPAT; EPO; JPO; DERWENT	OR	ON	2011/08/28 22:50
L80	72	(glide swipe) with activat$7 with (function application program)	US-PGPUB; USPAT; EPO; JPO; DERWENT	OR	ON	2011/08/28 22:50
L81	24	(glide swipe) with activat$7 with (function application program) and @ay<="2002"	US-PGPUB; USPAT; EPO; JPO; DERWENT	OR	ON	2011/08/28 22:50
L82	30	(glide swipe drag) with icon with activat$7 with (function application program) and @ay<="2002"	US-PGPUB; USPAT; EPO; JPO; DERWENT	OR	ON	2011/08/28 22:50
L83	2	"7441196".pn.	US-PGPUB; USPAT; EPO; JPO; DERWENT	OR	OFF	2011/08/28 22:50

L84	818	swipe with screen	US-PGPUB; USPAT; EPO; JPO; DERWENT	OR	ON	2011/08/28 22:50
L85	1099	(glide swipe) with screen	US-PGPUB; USPAT; EPO; JPO; DERWENT	OR	ON	2011/08/28 22:50
L86	2	"7286063".pn.	US-PGPUB; USPAT; EPO; JPO; DERWENT	OR	ON	2011/08/28 22:50
L90	263	("20010003845" | "20010012286" | "20010016947" | "20010034647" | "20010042002" | "20010044751" | "20010049824" | "20010051903" | "20020007309" | "20020010642" | "20020016750" | "20020029339" | "20020032782" | "20020035174" | "20020038256" | "20020038259" | "20020042914" | "20020042921" | "20020049631" | "20020056098" | "20020059590" | "20020067376" | "20020077177" | "20020078006" | "20020078453" | "20020098834" | "20020116292" | "20020116320" | "20020166122" | "20030046182" | "20030074661" | "20030095525" | "20030126607" | "20030140017" | "20030146940" | "20030149628" | "20030182195" | "20040003412" | "20040098747" | "20040103439" | "20040117831" | "20040128137" | "20040133848" | "20040148625" | "20040204116" | "20040210824" | "20040260689" | "20050010949" | "20050025550" | "20050075932" | "20050086690" | "20050091118" | "20050160458" | "20050234895" | "20050246231" | "20060155598" | "20060224987" | "20070008332" | "3586771" | "4650977" | "4706121" | "4992940" | "5041312" | "5064999" | "5119188" | "5236199" | "5321749" | "5353016" | "5410326" | "5479268" | "5532735" | "5553242" | "5559548" | "5598523" | "5602596" | "5617570" | "5625781" | "5710887" | "5727129" | "5734719" | "5758126" | "5794210" | "5796252" | "5801702" | "5809204" | "5819220" | "5822014" | "5828839" | "5832208" | "5832459" | "5838314" | "5848396" | "5851149" | "5874906" | "5878222" | "5890175" | "5893064" | "5895454" | "5896133" | "5900905" | "5902353" | "5903729" | "5911145" | "5918014" | "5918213").PN. OR ("5925103" | "5931901" | "5935002" | "5946381" | "5956681" | "5956693" | "5958012" | "5960411" | "5961593" |	US-PGPUB; USPAT; USOCR	OR	OFF	2011/08/28 22:50

		"5978381" | "5990927" | "6002853" | "6005562" | "6005631" | "6006257" | "6012049" | "6014502" | "6018372" | "6025837" | "6028600" | "6031537" | "6041312" | "6054989" | "6072483" | "6072492" | "6075575" | "6078866" | "6091417" | "6094156" | "6101473" | "6112186" | "6129274" | "6138107" | "6142371" | "6151050" | "6151059" | "6151596" | "6151630" | "6154205" | "6160552" | "6167382" | "6172677" | "6177936" | "6193152" | "6198481" | "6199050" | "6199077" | "6199098" | "6205432" | "6205582" | "6211878" | "6212265" | "6223215" | "6226623" | "6226642" | "6229540" | "6237030" | "6243093" | "6253189" | "6260192" | "6266060" | "6269343" | "6269361" | "6269403" | "6271832" | "6282516" | "6285357" | "6285987" | "6286017" | "6286043" | "6288716" | "6292779" | "6292782" | "6292786" | "6292809" | "6295057" | "6298330" | "6300947" | "6301566" | "6312336" | "6314406" | "6317706" | "6330005" | "6330543" | "6333753" | "6334108" | "6334145" | "6336131" | "6337715" | "6345279" | "6356905" | "6381583" | "6388714" | "6396531" | "6397387" | "6401132" | "6407779" | "6411307" | "6411337" | "6415270" | "6417873" | "6418441" | "6421066" | "6421071" | "6421724" | "6438540" | "6445398" | "6460181" | "6476825" | "6477575" | "6484149" | "6487189" | "6487586" | "6490555" | "6509913" | "6516311" | "6522342" | "6532312" | "6535888" | "6570582" | "6571279" | "6583800" | "6606103" | "6606280" | "6606347").PN. OR ("6608633" | "6615247" | "6615248" | "6618039" | "6631523" | "6636246" | "6647373" | "6662224" | "6680714" | "6684062" | "6692358" | "6704727" | "6711552" | "6714534" | "6728731" | "6769989" | "6804786" | "6826572" | "6829646" | "6857102" | "6868525" | "6907556" | "6925595" | "6928610" | "6938073" | "6973669" | "6978263" | "7013435" | "7020845" | "7051281" | "7174512" | "7293276" | "7383515").PN.				
L91	206	touch with slide with function	US-PGPUB; USPAT; USOCR	OR	ON	2011/08/28 22:50
L92	13	("4366475" | "4686332" | "4821030" | "4914624" | "5402151" | "5563632" | "5596346" | "5638060" | "5687331" | "5736974" | "5736976" | "5761485" | "5838973").PN.	US-PGPUB; USPAT; USOCR	OR	OFF	2011/08/28 22:50
L93	190051	object near3 type	US-PGPUB; USPAT; USOCR	OR	OFF	2011/08/28 22:50

L94	5	(file item object) near3 type with open near3 respective	US-PGPUB; USPAT; USOCR	OR	OFF	2011/08/28 22:50
L95	1226	open$3 with different with program	US-PGPUB; USPAT; USOCR	OR	OFF	2011/08/28 22:50
L96	2	multiple near3 file near3 selection with open	US-PGPUB; USPAT; USOCR	OR	ON	2011/08/28 22:50
L97	19	applying with command with (plurality multiple) with files	US-PGPUB; USPAT; USOCR	OR	ON	2011/08/28 22:50
L98	34800	(flick stroke) with (open application command)	US-PGPUB; USPAT; EPO; JPO; DERWENT	OR	OFF	2011/08/28 22:50
L99	379	(flick) with (open application command)	US-PGPUB; USPAT; EPO; JPO; DERWENT	OR	ON	2011/08/28 22:50
L100	132	(flick) with (open application command) and @ay<="2002"	US-PGPUB; USPAT; EPO; JPO; DERWENT	OR	ON	2011/08/28 22:50
L101	5	(flick) with (open application command) and @ay<="2002" and "715"/$.ccls.	US-PGPUB; USPAT; EPO; JPO; DERWENT	OR	ON	2011/08/28 22:50
L102	40	(flick) and @ay<="2002" and "715"/$.ccls.	US-PGPUB; USPAT; EPO; JPO; DERWENT	OR	ON	2011/08/28 22:50
L103	1002	(flick gesture) and @ay<="2002" and "715"/$.ccls.	US-PGPUB; USPAT; EPO; JPO; DERWENT	OR	ON	2011/08/28 22:50
L104	2424	(flick gesture slide) and @ay<="2002" and "715"/$.ccls.	US-PGPUB; USPAT; EPO; JPO; DERWENT	OR	ON	2011/08/28 22:50
L105	80	(flick gesture slide) and @ay<="2002" and "715"/702,864.ccls.	US-PGPUB; USPAT; EPO; JPO; DERWENT	OR	ON	2011/08/28 22:50
L106	6603	finger near3 (flick gesture slide) and @ay<="2002"	US-PGPUB; USPAT; EPO; JPO;	OR	ON	2011/08/28 22:50

			DERWENT			
L107	88	finger near3 (flick gesture slide) and @ay<="2002" and "715"/$.ccls.	US-PGPUB; USPAT; EPO; JPO; DERWENT	OR	ON	2011/08/28 22:50
L108	0	"5543591,5943052,5907327,4686332".pn.	US-PGPUB; USPAT; EPO; JPO; DERWENT	OR	ON	2011/08/28 22:50
L109	9	("5543591" "5943052" "5907327" "4686332").pn.	US-PGPUB; USPAT; EPO; JPO; DERWENT	OR	ON	2011/08/28 22:50
L110	164921	(glide flick touch swipe) with screen	US-PGPUB; USPAT; EPO; JPO; DERWENT	OR	ON	2011/08/28 22:50
L111	24800	(glide flick touch swipe) with screen with (applications functions)	US-PGPUB; USPAT; EPO; JPO; DERWENT	OR	ON	2011/08/28 22:50
L112	100	(glide flick touch swipe) with screen with (applications functions) and "715"/$.ccls. and @AY="2002"	US-PGPUB; USPAT; EPO; JPO; DERWENT	OR	ON	2011/08/28 22:50
L113	450	(glide flick touch swipe) with screen with (applications functions) and "715"/$.ccls. and @AY<="2002"	US-PGPUB; USPAT; EPO; JPO; DERWENT	OR	ON	2011/08/28 22:50
L114	0	(glide flick swipe) with screen with (applications functions) and "715"/$.ccls. and @AY<="2002"	US-PGPUB; USPAT; EPO; JPO; DERWENT	OR	ON	2011/08/28 22:50
L115	11	(glide flick swipe) with screen and "715"/$.ccls. and @AY<="2002"	US-PGPUB; USPAT; EPO; JPO; DERWENT	OR	ON	2011/08/28 22:50
L116	222	(glide flick gesture swipe) with screen and "715"/$.ccls. and @AY<="2002"	US-PGPUB; USPAT; EPO; JPO; DERWENT	OR	ON	2011/08/28 22:50
L117	308	(glide flick swipe) with screen and @AY<="2002"	US-PGPUB; USPAT; EPO; JPO; DERWENT	OR	ON	2011/08/28 22:50
L118	8	(glide flick swipe) with screen with icon and @AY<="2002"	US-PGPUB; USPAT; EPO; JPO;	OR	ON	2011/08/28 22:50

			DERWENT			
L119	16	("20010011308" | "20030142138" | "20040034801" | "20050253817" | "20050253817" | "20050264833" | "5821933" | "5907327" | "6633310").PN.	US-PGPUB; USPAT; EPO; JPO; DERWENT	OR	ON	2011/08/28 22:50
L120	454	(glide flick swipe) with finger and @AY<="2002"	US-PGPUB; USPAT; EPO; JPO; DERWENT	OR	ON	2011/08/28 22:50
L121	3	(glide flick swipe) with finger and @AY<="2002" and "715"/$.ccls.	US-PGPUB; USPAT; EPO; JPO; DERWENT	OR	ON	2011/08/28 22:50
L122	13	("5250929" | "5568604" | "5579036" | "5612719" | "5661476" | "5748185" | "5767457" | "5883617" | "5928304" | "5943043" | "5943044" | "5995083" | "6049328").PN.	US-PGPUB; USPAT; USOCR	OR	OFF	2011/08/28 22:50
L123	1656	715/716.ccls.	US-PGPUB; USPAT; USOCR	OR	OFF	2011/08/28 22:50
L124	12	715/716.ccls. and dvd near menu	US-PGPUB; USPAT; USOCR	OR	OFF	2011/08/28 22:50
L125	15	715/716.ccls. and dvd near menu	US-PGPUB; USPAT; USOCR	OR	ON	2011/08/28 22:50
L126	673	715/716.ccls. and dvd	US-PGPUB; USPAT; USOCR	OR	ON	2011/08/28 22:50
L127	843	715/716.ccls. and menu	US-PGPUB; USPAT; USOCR	OR	ON	2011/08/28 22:50
L128	85	715/716.ccls. and menu and theme	US-PGPUB; USPAT; USOCR	OR	ON	2011/08/28 22:50
L129	439	715/716.ccls. and menu and effects	US-PGPUB; USPAT; USOCR	OR	ON	2011/08/28 22:50
L130	9	715/716.ccls. and menu with theme	US-PGPUB; USPAT; USOCR	OR	ON	2011/08/28 22:50
L131	1	"7200836".pn.	US-PGPUB; USPAT; USOCR	OR	ON	2011/08/28 22:50
L132	1	"20080120546".pn.	US-PGPUB;	OR	ON	2011/08/28 22:50

			USPAT; USOCR			
L133	682	715/864.ccls.	US-PGPUB; USPAT; USOCR	OR	ON	2011/08/28 22:50
L134	98	715/864.ccls. and keyboard and back and icons and files	US-PGPUB; USPAT; USOCR	OR	ON	2011/08/28 22:50
L135	48	715/864.ccls. and keyboard and back and icons and files and removable	US-PGPUB; USPAT; USOCR	OR	ON	2011/08/28 22:50
L136	46	715/864.ccls. and keyboard and icons and files and @ay<="2002"	US-PGPUB; USPAT; USOCR	OR	ON	2011/08/28 22:50
L137	2	"6346935".pn.	US-PGPUB; USPAT; EPO; JPO; DERWENT	OR	OFF	2011/08/28 22:50
L138	22	(glide flick touch swipe) with (coordinat$7) with screen with (applications functions) and "715"/$.ccls. and @AY<="2002"	US-PGPUB; USPAT; EPO; JPO; DERWENT	OR	ON	2011/08/28 22:50
L139	450	(touch finger) with (glide flick touch swipe) with screen with (applications functions) and "715"/$.ccls. and @AY<="2002"	US-PGPUB; USPAT; EPO; JPO; DERWENT	OR	ON	2011/08/28 22:50
L140	0	(touch finger) with (glide flick swipe) with screen with (applications functions) and "715"/$.ccls. and @AY<="2002"	US-PGPUB; USPAT; EPO; JPO; DERWENT	OR	ON	2011/08/28 22:50
L141	3	(touch finger) with (glide flick swipe) with screen and "715"/$.ccls. and @AY<="2002"	US-PGPUB; USPAT; EPO; JPO; DERWENT	OR	ON	2011/08/28 22:50
L142	2	"6140936".pn.	US-PGPUB; USPAT; EPO; JPO; DERWENT	OR	ON	2011/08/28 22:50
L143	2	"6346935".pn.	US-PGPUB; USPAT; EPO; JPO; DERWENT	OR	ON	2011/08/28 22:50
L144	250	files with applications with list with only	US-PGPUB; USPAT; EPO; JPO; DERWENT	OR	ON	2011/08/28 22:50
L145	151	(file near list) with (application near list)	US-	OR	ON	2011/08/28

			PGPUB; USPAT; EPO; JPO; DERWENT			22:50
L146	672	(file near view) with application	US-PGPUB; USPAT; EPO; JPO; DERWENT	OR	ON	2011/08/28 22:50
L147	21	sort with application near files	US-PGPUB; USPAT; EPO; JPO; DERWENT	OR	ON	2011/08/28 22:50
L148	790	(programs application) with files with (sort show list) with only	US-PGPUB; USPAT; EPO; JPO; DERWENT	OR	ON	2011/08/28 22:50
L149	80	(programs application) with files with (sort show list) with only and "715"/$.ccls.	US-PGPUB; USPAT; EPO; JPO; DERWENT	OR	ON	2011/08/28 22:50
L150	0	seperate with list with data near type	US-PGPUB; USPAT; EPO; JPO; DERWENT	OR	ON	2011/08/28 22:50
L151	7785	list with data near type	US-PGPUB; USPAT; EPO; JPO; DERWENT	OR	ON	2011/08/28 22:50
L152	933	list with data near type and "715"/$.ccls.	US-PGPUB; USPAT; EPO; JPO; DERWENT	OR	ON	2011/08/28 22:50
L153	820	application near list and file near list	US-PGPUB; USPAT; EPO; JPO; DERWENT	OR	ON	2011/08/28 22:50
L154	278	application near list and file near list and @ay<="2002"	US-PGPUB; USPAT; EPO; JPO; DERWENT	OR	ON	2011/08/28 22:50
L155	2	"20030160832".pn.	US-PGPUB; USPAT; EPO; JPO; DERWENT	OR	OFF	2011/08/28 22:50
L156	4870	touch with (flick gesture slide swipe across) and @ay<"2002"	US-PGPUB; USPAT; EPO; JPO; DERWENT	OR	ON	2011/08/28 22:50
L157	4635	touch with (flick slide swipe across) and	US-	OR	ON	2011/08/28

		@ay<"2002"	PGPUB; USPAT; EPO; JPO; DERWENT			22:50
L158	2804	touch with (flick slide swipe) and @ay<"2002"	US-PGPUB; USPAT; EPO; JPO; DERWENT	OR	ON	2011/08/28 22:50
L159	2780	touch with (slide swipe) and @ay<"2002"	US-PGPUB; USPAT; EPO; JPO; DERWENT	OR	ON	2011/08/28 22:50
L160	56	touch with (swipe) and @ay<"2002"	US-PGPUB; USPAT; EPO; JPO; DERWENT	OR	ON	2011/08/28 22:50
L161	1015	touch near2 (flick slide swipe across) and @ay<"2002"	US-PGPUB; USPAT; EPO; JPO; DERWENT	OR	ON	2011/08/28 22:50
L162	2	touch near2 (flick slide swipe across) with activate and @ay<"2002"	US-PGPUB; USPAT; EPO; JPO; DERWENT	OR	ON	2011/08/28 22:50
L163	30	touch near2 (flick slide swipe across) with function and @ay<"2002"	US-PGPUB; USPAT; EPO; JPO; DERWENT	OR	ON	2011/08/28 22:50
L164	2	"5053758".pn.	US-PGPUB; USPAT; EPO; JPO; DERWENT	OR	ON	2011/08/28 22:50
L165	33	touch near2 (flick glide slide swipe across) with function and @ay<"2002"	US-PGPUB; USPAT; EPO; JPO; DERWENT	OR	ON	2011/08/28 22:50
L166	3	touch near2 (glide) with function and @ay<"2002"	US-PGPUB; USPAT; EPO; JPO; DERWENT	OR	ON	2011/08/28 22:50
L167	34	neonode.as.	US-PGPUB; USPAT; EPO; JPO; DERWENT	OR	ON	2011/08/28 22:50
L168	10458	(glide flick touch swipe) with icon	US-PGPUB; USPAT; EPO; JPO; DERWENT	OR	ON	2011/08/28 22:50
L169	49984	(glide flick touch swipe) with	US-	OR	ON	2011/08/28

		(representation icon function)	PGPUB; USPAT; EPO; JPO; DERWENT			22:50
L170	3457	(glide flick touch swipe) with (representation icon function) with (activate activation open start)	US-PGPUB; USPAT; EPO; JPO; DERWENT	OR	ON	2011/08/28 22:50
L171	1038	(glide flick touch swipe) with (representation icon function) with (activate activation open start) and @ay<="2002"	US-PGPUB; USPAT; EPO; JPO; DERWENT	OR	ON	2011/08/28 22:50
L172	105	(glide flick touch swipe) with (representation icon function) with (activate activation open start) and @ay<="2002" and "715"/$.ccls.	US-PGPUB; USPAT; EPO; JPO; DERWENT	OR	ON	2011/08/28 22:50
L173	122	(glide flick touch swipe slide) with (representation icon function) with (activate activation open start) and @ay<="2002" and "715"/$.ccls.	US-PGPUB; USPAT; EPO; JPO; DERWENT	OR	ON	2011/08/28 22:50
L174	122	(glide flick touch swipe slide) with (representation icon function) with (activate activation open start unlock) and @ay<="2002" and "715"/$.ccls.	US-PGPUB; USPAT; EPO; JPO; DERWENT	OR	ON	2011/08/28 22:50
L175	226	(glide flick touch swipe slide drag) with (representation icon function) with (activate activation open start unlock) and @ay<="2002" and "715"/$.ccls.	US-PGPUB; USPAT; EPO; JPO; DERWENT	OR	ON	2011/08/28 22:50
L176	2	touch near2 (flick slide swipe across glide) with activate and @ay<"2002"	US-PGPUB; USPAT; EPO; JPO; DERWENT	OR	ON	2011/08/28 22:50
L177	1	touch near4 (flick slide swipe across glide) with activate with (icon button) and @ay<"2002"	US-PGPUB; USPAT; EPO; JPO; DERWENT	OR	ON	2011/08/28 22:50
L178	2424	(flick gesture slide) and @ay<="2002" and "715"/$.ccls.	US-PGPUB; USPAT; EPO; JPO; DERWENT	OR	ON	2011/08/28 22:50
L179	11	(glide flick swipe) with screen and "715"/$.ccls. and @AY<="2002"	US-PGPUB; USPAT; EPO; JPO; DERWENT	OR	ON	2011/08/28 22:50
L180	1656	715/716.ccls.	US-PGPUB; USPAT; USOCR	OR	OFF	2011/08/28 22:50
L181	682	715/864.ccls.	US-PGPUB;	OR	ON	2011/08/28 22:50

			USPAT; USOCR			
L182	3	(touch finger) with (glide flick swipe) with screen and "715"/$.ccls. and @AY<="2002"	US-PGPUB; USPAT; EPO; JPO; DERWENT	OR	ON	2011/08/28 22:50
L183	33	(touch finger) with (glide flick swipe slide) with screen and "715"/$.ccls. and @AY<="2002"	US-PGPUB; USPAT; EPO; JPO; DERWENT	OR	ON	2011/08/28 22:50
L184	16	("20010002694" | "20010022579" | "20010026268" | "20010028344" | "20010055006" | "4790028" | "5053758" | "5283558").PN.	US-PGPUB; USPAT; EPO; JPO; DERWENT	OR	ON	2011/08/28 22:50
L193	6	"1459245"	US-PGPUB; USPAT; EPO; JPO; DERWENT	OR	ON	2011/08/28 22:50

8/28/2011 10:58:20 PM
C:\Users\rpitaro\Documents\EAST\Workspaces\10315250.wsp

Search Notes	Application/Control No.	Applicant(s)/Patent Under Reexamination
	10315250	GOERTZ, MAGNUS
	Examiner	Art Unit
	Ryan F Pitaro	2174

SEARCHED			
Class	Subclass	Date	Examiner
Update	Search	11/8/2007	RFP
Update	Search	6/17/2008	RFP
Update	Search	12/21/2008	RFP
Update	Search	4/22/2009	RFP
Update	Search	11/20/2009	RFP
Update	Search	5/22/2010	RFP
Update	Search	6/5/2011	RFP
Update	Search	8/25/2011	RFP
Update	Search	10/18/2011	RFP

SEARCH NOTES		
Search Notes	Date	Examiner
Update Search	11/8/2007	RFP
Update Search	6/17/2008	RFP
EAST	12/21/2008	RFP
Internet	12/21/2008	RFP
Safari Online Books	12/21/2008	RFP
IEEE	12/21/2008	RFP
ACM	12/21/2008	RFP
Update Search	4/22/2009	RFP
Update Search	11/20/2009	RFP
Update Search	5/22/2010	RFP
Internet Search	5/22/2010	RFP
Update Search	6/5/2011	RFP
STIC Search	6/5/2011	RFP
Fast and Focus Search	6/5/2011	RFP
Update Search	8/25/2011	RFP
Update Search	10/18/2011	RFP

INTERFERENCE SEARCH			
Class	Subclass	Date	Examiner
Interference	Search	6/5/2011	RFP
Update	Search	8/25/2011	RFP

INTERFERENCE SEARCH			
Class	**Subclass**	**Date**	**Examiner**
Update	Search	10/18/2011	RFP

Index of Claims	Application/Control No.	Applicant(s)/Patent Under Reexamination
	10315250	GOERTZ, MAGNUS
	Examiner	**Art Unit**
	Ryan F Pitaro	2174

✓	Rejected	-	Cancelled	N	Non-Elected	A	Appeal
=	Allowed	÷	Restricted	I	Interference	O	Objected

☐ Claims renumbered in the same order as presented by applicant ☐ CPA ☐ T.D. ☐ R.1.47

CLAIM		DATE								
Final	Original	11/09/2007	06/23/2008	12/21/2008	07/06/2009	11/20/2009	05/23/2010	06/06/2011	08/28/2011	
	1	✓	✓	✓	✓	✓	✓	=	=	
	2	✓	✓	✓	✓	✓	✓	=	=	
	3	✓	✓	✓	✓	✓	✓	=	=	
	4	✓	✓	✓	✓	✓	✓	=	=	
	5	✓	✓	✓	✓	✓	✓	=	=	
	6	✓	✓	✓	✓	✓	✓	=	=	
	7	✓	✓	✓	✓	✓	✓	=	=	
	8	✓	✓	✓	✓	✓	✓	=	=	
	9	✓	✓	✓	✓	✓	✓	=	=	
	10	✓	✓	✓	✓	✓	✓	=	=	
	11	✓	✓	✓	✓	✓	✓	=	=	
	12	✓	✓	✓	✓	✓	✓	=	=	
	13	✓	✓	✓	✓	✓	✓	=	=	
	14	✓	✓	✓	✓	✓	✓	=	=	
	15	✓	✓	✓	✓	✓	✓	✓	-	
	16	✓	✓	✓	✓	✓	✓	✓	-	
	17	✓	✓	✓	-	-	-	-	-	
	18	✓	✓	✓	✓	✓	✓	=	=	
	19		÷	N	-			-	-	
	20		÷	N	-			-	-	
	21		÷	N	-			-	-	
	22		÷	N	-			-	-	
	23		÷	N	-			-	-	
	24		÷	N	-			-	-	
	25		÷	N	-			-	-	
	26		÷	N	-			-	-	
	27		÷	N	-			-	-	
	28		÷	N	-			-	-	
	29		÷	N	-			-	-	
	30		÷	N	-			-	-	
	31		÷	N	-			-	-	
	32		÷	N	-			-	-	
	33		÷	N	-			-	-	
	34		÷	N	-			-	-	
	35		÷	N	-			-	-	
	36		÷	N	-			-	-	

Index of Claims	Application/Control No.	Applicant(s)/Patent Under Reexamination
	10315250	GOERTZ, MAGNUS
	Examiner	Art Unit
	Ryan F Pitaro	2174

✓	Rejected	-	Cancelled	N	Non-Elected	A	Appeal
=	Allowed	÷	Restricted	I	Interference	O	Objected

☐ Claims renumbered in the same order as presented by applicant ☐ CPA ☐ T.D. ☐ R.1.47

CLAIM		DATE								
Final	Original	11/09/2007	06/23/2008	12/21/2008	07/06/2009	11/20/2009	05/23/2010	06/06/2011	08/28/2011	
	37		÷	N	-			-	-	
	38		÷	N	-			-	-	
	39		÷	N	-			-	-	
	40		÷	N	-			-	-	
	41		÷	N	-			-	-	
	42		÷	N	-			-	-	
	43		÷	N	-			-	-	
	44		÷	N	-			-	-	
	45		÷	N	-			-	-	
	46		÷	N	-			-	-	
	47		÷	N	-			-	-	
	48							=	=	
	49							=	=	
	50									
	51									
	52									
	53									
	54									
	55									
	56									
	57									
	58									
	59									
	60									
	61									
	62									
	63									
	64									
	65									

Issue Classification	Application/Control No.	Applicant(s)/Patent Under Reexamination
	10315250	GOERTZ, MAGNUS
	Examiner	**Art Unit**
	RYAN PITARO	2171

ORIGINAL		INTERNATIONAL CLASSIFICATION									
CLASS	SUBCLASS	CLAIMED					NON-CLAIMED				
715	716	G	0	6	F	3 / 00 (2006.01.01)					

CROSS REFERENCE(S)					
CLASS	SUBCLASS (ONE SUBCLASS PER BLOCK)				
715	864	702			

☒ Claims renumbered in the same order as presented by applicant ☐ CPA ☐ T.D. ☐ R.1.47

Final	Original	Final	Original	Final	Original	Final	Original	Final	Original	Final	Original	Final	Original	Final	Original
1	1		17		33	17	49								
2	2	15	18		34										
3	3		19		35										
4	4		20		36										
5	5		21		37										
6	6		22		38										
7	7		23		39										
8	8		24		40										
9	9		25		41										
10	10		26		42										
11	11		27		43										
12	12		28		44										
13	13		29		45										
14	14		30		46										
	15		31		47										
	16		32	16	48										

NONE		Total Claims Allowed:	
(Assistant Examiner)	(Date)	17	
/RYAN PITARO/ Primary Examiner.Art Unit 2171	8/25/2011	O.G. Print Claim(s)	O.G. Print Figure
(Primary Examiner)	(Date)	1	13

Attorney's Docket No.: NEONODE.P004 *PATENT*

IN THE UNITED STATES PATENT AND TRADEMARK OFFICE

In Re Patent Application of:	)	
	)	Examiner: Ryan F. Pitaro
Magnus Goertz	)	
	)	Art Unit: 2174
Application No: 10/315,250	)	
	)	
Filed: December 10, 2002	)	
	)	
For: USER INTERFACE FOR MOBILE HANDHELD COMPUTER UNIT	)	
	)	

Mail Stop AMENDMENT
Commissioner for Patents
P. O. Box 1450
Alexandria, VA 22313-1450

AMENDMENT AND RESPONSE TO OFFICE ACTION

UNDER 37 C.F.R. §1.111

Sir:

In response to the Office Action dated June 7, 2011, applicant respectfully requests that the above-identified application be amended as follows.

IN THE CLAIMS:

Please cancel claims **15** and **16** without prejudice.

Please substitute the following claims for the pending claims with the same number:

1. (previously presented) A non-transitory computer readable medium storing a computer program with computer program code, which, when read by a mobile handheld computer unit, allows the computer to present a user interface for the mobile handheld computer unit, the user interface comprising:

a touch sensitive area in which a representation of a function is provided, wherein the representation consists of only one option for activating the function and wherein the function is activated by a multi-step operation comprising (i) an object touching the touch sensitive area at a location where the representation is provided and then (ii) the object gliding along the touch sensitive area away from the touched location.

2. (previously presented) The computer readable medium of claim **1**, wherein the function, when activated, causes the user interface to display icons representing different services or settings for a currently active application.

3. (previously presented) The computer readable medium of claim **2**, wherein the user interface is characterised in, that a selection of a preferred service or setting is done by tapping on a display icon corresponding to the preferred service or setting.

4. (previously presented) The computer readable medium of claim **1**, wherein the function, when activated, causes the user interface to display a keyboard and a text field.

5. (previously presented) The computer readable medium of claim **4**, wherein said text field is used for inputting and editing of text through said keyboard.

6. (previously presented) The computer readable medium of claim **1**, wherein the function, when activated, causes the user interface to display a list with a library of available applications and files on the mobile handheld computer unit.

7. (previously presented) The computer readable medium of claim **6**, wherein the user interface is characterised in, that a selection of an application or file is done by gliding the object along said touch sensitive area so that a representation of a desired one of said application or file is highlighted, raising said object from said touch sensitive area, and then tapping on said touch sensitive area.

8. (previously presented) The computer readable medium of claim **7**, wherein the user interface is characterised in, that at any given time said list presents only files or only applications, and that an area of said list presents a field through which said list can be changed from presenting files to presenting applications, or from presenting applications to presenting files.

9. (previously presented) The computer readable medium of claim **7**, wherein the user interface is characterised in, that, one item in said list is highlighted by a moveable marking, and the user interface enables list navigation whereby gliding the object along the touch sensitive area in a direction towards the top of said list or towards the bottom of said list causes said marking to move in the same direction without scrolling the list.

10. (previously presented) The computer readable medium of claim **9**, wherein the user interface is characterised in, that, if the number of applications or files in said list exceeds the number of applications or files that can be presented on said touch sensitive area as content, and if the object is (i) glided along said touch sensitive area to the top or bottom of said touch sensitive area, then (ii) raised above said touch sensitive area, then (iii) replaced on said touch sensitive area, and then (iv) again glided along said touch sensitive area to the top or bottom of said touch sensitive area, said list navigation pages the content of said list up or down by one whole page.

11. (previously presented) The computer readable medium of claim **10**, wherein the user interface is characterised in, that if the object is raised from any first position on said touch sensitive area and then replaced on any second position on said touch sensitive area, said list navigation can be continued from said second position.

12. (previously presented) The computer readable medium of claim **1**, wherein the user interface is characterised in, that an active application, function, service or setting is advanced one step by gliding the object

along the touch sensitive area from left to right, and that the active application, function, service or setting is closed or backed one step by gliding the object along the touch sensitive area from right to left.

13. (previously presented) The computer readable medium of claim **1**, wherein the user interface is characterised in, that said representation of said function is located at the bottom of said touch sensitive area.

14. (previously presented) The computer readable medium of claim **1**, wherein the touch sensitive area is 2-3 inches in diagonal dimension.

15. – **17.** (cancelled)

18. (previously presented) The computer readable medium of claim **1**, characterised in, that said computer program code is adapted to function as a shell upon an operating system.

19. – **47.** (cancelled)

48. (previously presented) The computer readable medium of claim **1**, wherein the representation is finger-sized.

49. (previously presented) The computer readable medium of claim **1**, wherein the location where the representation is provided does not provide touch functionality for a different function.

REMARKS

Applicant has carefully studied the outstanding Office Action. The present amendment is intended to place the application in condition for allowance and is believed to overcome all of the objections and rejections made by the Examiner. Favorable reconsideration and allowance of the application are respectfully requested.

Applicant has canceled claims **15** and **16**. Claims **1** – **14**, **18**, **48** and **49** are presented for examination.

On page 2 of the Office Action, the Examiner has indicated that claims **1** – **14**, **18**, **48** and **49** are allowed.

On page 2 of the Office Action, the Examiner has rejected claims **15** and **16** under 35 U.S.C. 112, second paragraph, as being indefinite. Applicant has cancelled these claims without acquiescence to the Examiner's reasons for rejection, and respectfully submits that rejection of these claims is thus rendered moot.

For the foregoing reasons, applicant respectfully submits that the applicable objections and rejections have been overcome and that the claims are in condition for allowance.

If any matters can be resolved by telephone, applicant requests that the Patent and Trademark Office please contact applicant's representative at the telephone number listed below.

Respectfully submitted,
SOQUEL GROUP LLC

Dated: June 9, 2011

/Marc A. Berger/
Marc A. Berger
Reg. No. 44,029

P.O. Box 691
Soquel, CA 95073
(831) 426-8200
Customer No. 75660

Electronic Acknowledgement Receipt	
EFS ID:	10265265
Application Number:	10315250
International Application Number:	
Confirmation Number:	1226
Title of Invention:	User interface
First Named Inventor/Applicant Name:	Magnus Goertz
Customer Number:	75660
Filer:	Marc Aron Berger
Filer Authorized By:	
Attorney Docket Number:	NEONODE.P004
Receipt Date:	09-JUN-2011
Filing Date:	10-DEC-2002
Time Stamp:	08:58:11
Application Type:	Utility under 35 USC 111(a)

Payment information:

Submitted with Payment	no

File Listing:

Document Number	Document Description	File Name	File Size(Bytes)/ Message Digest	Multi Part /.zip	Pages (if appl.)
1		NEONODE-P004_Amendment_06-09-2011.pdf	63432 33616fd06dcba15b17916e3029cd6b9ed0d29acd	yes	7

	Multipart Description/PDF files in .zip description		
	Document Description	**Start**	**End**
	Amendment/Req. Reconsideration-After Non-Final Reject	1	1
	Claims	2	5
	Applicant Arguments/Remarks Made in an Amendment	6	7
Warnings:			
Information:			
	Total Files Size (in bytes):	63432	

This Acknowledgement Receipt evidences receipt on the noted date by the USPTO of the indicated documents, characterized by the applicant, and including page counts, where applicable. It serves as evidence of receipt similar to a Post Card, as described in MPEP 503.

New Applications Under 35 U.S.C. 111
If a new application is being filed and the application includes the necessary components for a filing date (see 37 CFR 1.53(b)-(d) and MPEP 506), a Filing Receipt (37 CFR 1.54) will be issued in due course and the date shown on this Acknowledgement Receipt will establish the filing date of the application.

National Stage of an International Application under 35 U.S.C. 371
If a timely submission to enter the national stage of an international application is compliant with the conditions of 35 U.S.C. 371 and other applicable requirements a Form PCT/DO/EO/903 indicating acceptance of the application as a national stage submission under 35 U.S.C. 371 will be issued in addition to the Filing Receipt, in due course.

New International Application Filed with the USPTO as a Receiving Office
If a new international application is being filed and the international application includes the necessary components for an international filing date (see PCT Article 11 and MPEP 1810), a Notification of the International Application Number and of the International Filing Date (Form PCT/RO/105) will be issued in due course, subject to prescriptions concerning national security, and the date shown on this Acknowledgement Receipt will establish the international filing date of the application.

PTO/SB/06 (07-06)
Approved for use through 1/31/2007. OMB 0651-0032
U.S. Patent and Trademark Office; U.S. DEPARTMENT OF COMMERCE
Under the Paperwork Reduction Act of 1995, no persons are required to respond to a collection of information unless it displays a valid OMB control number.

PATENT APPLICATION FEE DETERMINATION RECORD

Substitute for Form PTO-875

Application or Docket Number	Filing Date	☐ To be Mailed
10/315,250	12/10/2002	

APPLICATION AS FILED – PART I

	(Column 1)	(Column 2)	SMALL ENTITY ☒		OR	OTHER THAN SMALL ENTITY	
FOR	NUMBER FILED	NUMBER EXTRA	RATE ($)	FEE ($)		RATE ($)	FEE ($)
☐ BASIC FEE (37 CFR 1.16(a), (b), or (c))	N/A	N/A	N/A			N/A	
☐ SEARCH FEE (37 CFR 1.16(k), (i), or (m))	N/A	N/A	N/A			N/A	
☐ EXAMINATION FEE (37 CFR 1.16(o), (p), or (q))	N/A	N/A	N/A			N/A	
TOTAL CLAIMS (37 CFR 1.16(i))	minus 20 =	*	X $ =		OR	X $ =	
INDEPENDENT CLAIMS (37 CFR 1.16(h))	minus 3 =	*	X $ =			X $ =	
☐ APPLICATION SIZE FEE (37 CFR 1.16(s))	If the specification and drawings exceed 100 sheets of paper, the application size fee due is $250 ($125 for small entity) for each additional 50 sheets or fraction thereof. See 35 U.S.C. 41(a)(1)(G) and 37 CFR 1.16(s).						
☐ MULTIPLE DEPENDENT CLAIM PRESENT (37 CFR 1.16(j))							
* If the difference in column 1 is less than zero, enter "0" in column 2.			TOTAL			TOTAL	

APPLICATION AS AMENDED – PART II

AMENDMENT 06/09/2011	(Column 1) CLAIMS REMAINING AFTER AMENDMENT		(Column 2) HIGHEST NUMBER PREVIOUSLY PAID FOR	(Column 3) PRESENT EXTRA	SMALL ENTITY RATE ($)	ADDITIONAL FEE ($)	OR	OTHER THAN SMALL ENTITY RATE ($)	ADDITIONAL FEE ($)
Total (37 CFR 1.16(i))	* 17	Minus	** 47	= 0	X $26 =	0	OR	X $ =	
Independent (37 CFR 1.16(h))	* 1	Minus	***8	= 0	X $110 =	0	OR	X $ =	
☐ Application Size Fee (37 CFR 1.16(s))									
☐ FIRST PRESENTATION OF MULTIPLE DEPENDENT CLAIM (37 CFR 1.16(j))							OR		
					TOTAL ADD'L FEE	0	OR	TOTAL ADD'L FEE	

AMENDMENT	(Column 1) CLAIMS REMAINING AFTER AMENDMENT		(Column 2) HIGHEST NUMBER PREVIOUSLY PAID FOR	(Column 3) PRESENT EXTRA	RATE ($)	ADDITIONAL FEE ($)	OR	RATE ($)	ADDITIONAL FEE ($)
Total (37 CFR 1.16(i))	*	Minus	**	=	X $ =		OR	X $ =	
Independent (37 CFR 1.16(h))	*	Minus	***	=	X $ =		OR	X $ =	
☐ Application Size Fee (37 CFR 1.16(s))									
☐ FIRST PRESENTATION OF MULTIPLE DEPENDENT CLAIM (37 CFR 1.16(j))							OR		
					TOTAL ADD'L FEE		OR	TOTAL ADD'L FEE	

* If the entry in column 1 is less than the entry in column 2, write "0" in column 3.

** If the "Highest Number Previously Paid For" IN THIS SPACE is less than 20, enter "20".

*** If the "Highest Number Previously Paid For" IN THIS SPACE is less than 3, enter "3".

The "Highest Number Previously Paid For" (Total or Independent) is the highest number found in the appropriate box in column 1.

Legal Instrument Examiner:
/JERMAINE MINOR/

This collection of information is required by 37 CFR 1.16. The information is required to obtain or retain a benefit by the public which is to file (and by the USPTO to process) an application. Confidentiality is governed by 35 U.S.C. 122 and 37 CFR 1.14. This collection is estimated to take 12 minutes to complete, including gathering, preparing, and submitting the completed application form to the USPTO. Time will vary depending upon the individual case. Any comments on the amount of time you require to complete this form and/or suggestions for reducing this burden, should be sent to the Chief Information Officer, U.S. Patent and Trademark Office, U.S. Department of Commerce, P.O. Box 1450, Alexandria, VA 22313-1450. DO NOT SEND FEES OR COMPLETED FORMS TO THIS ADDRESS. **SEND TO: Commissioner for Patents, P.O. Box 1450, Alexandria, VA 22313-1450.**

If you need assistance in completing the form, call 1-800-PTO-9199 and select option 2.

UNITED STATES PATENT AND TRADEMARK OFFICE

UNITED STATES DEPARTMENT OF COMMERCE
United States Patent and Trademark Office
Address: COMMISSIONER FOR PATENTS
P.O. Box 1450
Alexandria, Virginia 22313-1450
www.uspto.gov

APPLICATION NO.	FILING DATE	FIRST NAMED INVENTOR	ATTORNEY DOCKET NO.	CONFIRMATION NO.
10/315,250	12/10/2002	Magnus Goertz	NEONODE.P004	1226

75660 7590 06/07/2011

Soquel Group, LLC
P.O. Box 691
Soquel, CA 95073

EXAMINER	
PITARO, RYAN F	
ART UNIT	PAPER NUMBER
2171	

MAIL DATE	DELIVERY MODE
06/07/2011	PAPER

Please find below and/or attached an Office communication concerning this application or proceeding.

The time period for reply, if any, is set in the attached communication.

Office Action Summary	Application No.	Applicant(s)	
	10/315,250	GOERTZ, MAGNUS	
	Examiner	Art Unit	
	RYAN PITARO	2171	

-- The MAILING DATE of this communication appears on the cover sheet with the correspondence address --

Period for Reply

A SHORTENED STATUTORY PERIOD FOR REPLY IS SET TO EXPIRE 3 MONTH(S) OR THIRTY (30) DAYS, WHICHEVER IS LONGER, FROM THE MAILING DATE OF THIS COMMUNICATION.

- Extensions of time may be available under the provisions of 37 CFR 1.136(a). In no event, however, may a reply be timely filed after SIX (6) MONTHS from the mailing date of this communication.
- If NO period for reply is specified above, the maximum statutory period will apply and will expire SIX (6) MONTHS from the mailing date of this communication.
- Failure to reply within the set or extended period for reply will, by statute, cause the application to become ABANDONED (35 U.S.C. § 133). Any reply received by the Office later than three months after the mailing date of this communication, even if timely filed, may reduce any earned patent term adjustment. See 37 CFR 1.704(b).

Status

1)☒ Responsive to communication(s) filed on *30 June 2010*.

2a)☐ This action is **FINAL**. 2b)☒ This action is non-final.

3)☐ Since this application is in condition for allowance except for formal matters, prosecution as to the merits is closed in accordance with the practice under *Ex parte Quayle*, 1935 C.D. 11, 453 O.G. 213.

Disposition of Claims

4)☒ Claim(s) *1-16,18,48 and 49* is/are pending in the application.

4a) Of the above claim(s) _____ is/are withdrawn from consideration.

5)☒ Claim(s) *1-14,18,48 and 49* is/are allowed.

6)☒ Claim(s) *15 and 16* is/are rejected.

7)☐ Claim(s) _____ is/are objected to.

8)☐ Claim(s) _____ are subject to restriction and/or election requirement.

Application Papers

9)☐ The specification is objected to by the Examiner.

10)☐ The drawing(s) filed on _____ is/are: a)☐ accepted or b)☐ objected to by the Examiner.

Applicant may not request that any objection to the drawing(s) be held in abeyance. See 37 CFR 1.85(a).

Replacement drawing sheet(s) including the correction is required if the drawing(s) is objected to. See 37 CFR 1.121(d).

11)☐ The oath or declaration is objected to by the Examiner. Note the attached Office Action or form PTO-152.

Priority under 35 U.S.C. § 119

12)☐ Acknowledgment is made of a claim for foreign priority under 35 U.S.C. § 119(a)-(d) or (f).

a)☐ All b)☐ Some * c)☐ None of:

1.☐ Certified copies of the priority documents have been received.

2.☐ Certified copies of the priority documents have been received in Application No. _____.

3.☐ Copies of the certified copies of the priority documents have been received in this National Stage application from the International Bureau (PCT Rule 17.2(a)).

* See the attached detailed Office action for a list of the certified copies not received.

Attachment(s)

1) ☒ Notice of References Cited (PTO-892)
2) ☐ Notice of Draftsperson's Patent Drawing Review (PTO-948)
3) ☒ Information Disclosure Statement(s) (PTO/SB/08) Paper No(s)/Mail Date *12/21/2010*.
4) ☐ Interview Summary (PTO-413) Paper No(s)/Mail Date. _____ .
5) ☐ Notice of Informal Patent Application
6) ☐ Other: _____.

Continued Examination Under 37 CFR 1.114

A request for continued examination under 37 CFR 1.114, including the fee set forth in 37 CFR 1.17(e), was filed in this application after final rejection. Since this application is eligible for continued examination under 37 CFR 1.114, and the fee set forth in 37 CFR 1.17(e) has been timely paid, the finality of the previous Office action has been withdrawn pursuant to 37 CFR 1.114. Applicant's submission filed on 6/30/2010 has been entered.

Allowable Subject Matter

Claims 1-14,18,48-49 are allowed.

Claim Rejections - 35 USC § 112

The following is a quotation of the second paragraph of 35 U.S.C. 112:

> The specification shall conclude with one or more claims particularly pointing out and distinctly claiming the subject matter which the applicant regards as his invention.

Claims 15-16 are rejected under 35 U.S.C. 112, second paragraph, as being indefinite in that it fails to point out what is included or excluded by the claim language. This claim is an omnibus type claim.

Response to Arguments

Applicant's arguments, filed 6/30/2010, with respect to claims 1-14,18 have been fully considered and are persuasive. The rejections of claims 1-14,18 have been withdrawn.

Conclusion

Any inquiry concerning this communication or earlier communications from the examiner should be directed to RYAN PITARO whose telephone number is (571)272-4071. The examiner can normally be reached on 9:00am - 5:30pm Mondays through Fridays.

If attempts to reach the examiner by telephone are unsuccessful, the examiner's supervisor, Chat Do can be reached on 571-272-3721. The fax phone number for the organization where this application or proceeding is assigned is 571-273-8300.

Information regarding the status of an application may be obtained from the Patent Application Information Retrieval (PAIR) system. Status information for published applications may be obtained from either Private PAIR or Public PAIR. Status information for unpublished applications is available through Private PAIR only. For more information about the PAIR system, see http://pair-direct.uspto.gov. Should you have questions on access to the Private PAIR system, contact the Electronic Business Center (EBC) at 866-217-9197 (toll-free). If you would like assistance from a USPTO Customer Service Representative or access to the automated information system, call 800-786-9199 (IN USA OR CANADA) or 571-272-1000.

/Ryan F Pitaro/
Primary Examiner, Art Unit 2171

Notice of References Cited	Application/Control No. 10/315,250	Applicant(s)/Patent Under Reexamination GOERTZ, MAGNUS	
	Examiner RYAN PITARO	Art Unit 2171	Page 1 of 1

U.S. PATENT DOCUMENTS

*		Document Number Country Code-Number-Kind Code	Date MM-YYYY	Name	Classification
*	A	US-7,880,724	02-2011	Nguyen et al.	345/168
	B	US-			
	C	US-			
	D	US-			
	E	US-			
	F	US-			
	G	US-			
	H	US-			
	I	US-			
	J	US-			
	K	US-			
	L	US-			
	M	US-			

FOREIGN PATENT DOCUMENTS

*		Document Number Country Code-Number-Kind Code	Date MM-YYYY	Country	Name	Classification
	N					
	O					
	P					
	Q					
	R					
	S					
	T					

NON-PATENT DOCUMENTS

*		Include as applicable: Author, Title Date, Publisher, Edition or Volume, Pertinent Pages)
	U	
	V	
	W	
	X	

*A copy of this reference is not being furnished with this Office action. (See MPEP § 707.05(a).)
Dates in MM-YYYY format are publication dates. Classifications may be US or foreign.

EAST Search History

EAST Search History (Prior Art)

Ref #	Hits	Search Query	DBs	Default Operator	Plurals	Time Stamp
L1	9854	(glide flick touch swipe) with icon	US-PGPUB; USPAT; EPO; JPO; DERWENT	OR	ON	2011/06/06 08:26
L2	47832	(glide flick touch swipe) with (representation icon function)	US-PGPUB; USPAT; EPO; JPO; DERWENT	OR	ON	2011/06/06 08:27
L3	3314	(glide flick touch swipe) with (representation icon function) with (activate activation open start)	US-PGPUB; USPAT; EPO; JPO; DERWENT	OR	ON	2011/06/06 08:27
L4	1037	(glide flick touch swipe) with (representation icon function) with (activate activation open start) and @ay<="2002"	US-PGPUB; USPAT; EPO; JPO; DERWENT	OR	ON	2011/06/06 08:27
L5	104	(glide flick touch swipe) with (representation icon function) with (activate activation open start) and @ay<="2002" and "715"/$.ccls.	US-PGPUB; USPAT; EPO; JPO; DERWENT	OR	ON	2011/06/06 08:27
L6	121	(glide flick touch swipe slide) with (representation icon function) with (activate activation open start) and @ay<="2002" and "715"/$.ccls.	US-PGPUB; USPAT; EPO; JPO; DERWENT	OR	ON	2011/06/06 08:29
L7	121	(glide flick touch swipe slide) with (representation icon function) with (activate activation open start unlock) and @ay<="2002" and "715"/$.ccls.	US-PGPUB; USPAT; EPO; JPO; DERWENT	OR	ON	2011/06/06 08:29
L8	224	(glide flick touch swipe slide drag) with (representation icon function) with (activate activation open start unlock) and @ay<="2002" and "715"/$.ccls.	US-PGPUB; USPAT; EPO; JPO; DERWENT	OR	ON	2011/06/06 08:30
L9	2	touch near2 (flick slide swipe across glide) with activate and @ay<"2002"	US-PGPUB; USPAT; EPO; JPO; DERWENT	OR	ON	2011/06/06 08:32

L10	1	touch near4 (flick slide swipe across glide) with activate with (icon button) and @ay<"2002"	US-PGPUB; USPAT; EPO; JPO; DERWENT	OR	ON	2011/06/06 08:33
L11	2422	(flick gesture slide) and @ay<="2002" and "715"/$.ccls.	US-PGPUB; USPAT; EPO; JPO; DERWENT	OR	ON	2011/06/06 08:33
L12	11	(glide flick swipe) with screen and "715"/$.ccls. and @AY<="2002"	US-PGPUB; USPAT; EPO; JPO; DERWENT	OR	ON	2011/06/06 08:33
L13	1592	715/716.ccls.	US-PGPUB; USPAT; USOCR	OR	OFF	2011/06/06 08:33
L14	659	715/864.ccls.	US-PGPUB; USPAT; USOCR	OR	ON	2011/06/06 08:33
L15	3	(touch finger) with (glide flick swipe) with screen and "715"/$.ccls. and @AY<="2002"	US-PGPUB; USPAT; EPO; JPO; DERWENT	OR	ON	2011/06/06 08:34
L16	33	(touch finger) with (glide flick swipe slide) with screen and "715"/$.ccls. and @AY<="2002"	US-PGPUB; USPAT; EPO; JPO; DERWENT	OR	ON	2011/06/06 08:34
S1	2	"7441196".pn.	US-PGPUB; USPAT; EPO; JPO; DERWENT	OR	OFF	2008/12/08 17:03
S2	394	swipe with screen	US-PGPUB; USPAT; EPO; JPO; DERWENT	OR	ON	2008/12/08 17:05
S3	606	(glide swipe) with screen	US-PGPUB; USPAT; EPO; JPO; DERWENT	OR	ON	2008/12/08 17:05
S4	2	"7286063".pn.	US-PGPUB; USPAT; EPO; JPO; DERWENT	OR	ON	2008/12/08 17:10

S5	263	("20010003845" | "20010012286" | "20010016947" | "20010034647" | "20010042002" | "20010044751" | "20010049824" | "20010051903" | "20020007309" | "20020010642" | "20020016750" | "20020029339" | "20020032782" | "20020035174" | "20020038256" | "20020038259" | "20020042914" | "20020042921" | "20020049631" | "20020056098" | "20020059590" | "20020067376" | "20020077177" | "20020078006" | "20020078453" | "20020098834" | "20020116292" | "20020116320" | "20020166122" | "20030046182" | "20030074661" | "20030095525" | "20030126607" | "20030140017" | "20030146940" | "20030149628" | "20030182195" | "20040003412" | "20040098747" | "20040103439" | "20040117831" | "20040128137" | "20040133848" | "20040148625" | "20040204116" | "20040210824" | "20040260689" | "20050010949" | "20050025550" | "20050075932" | "20050086690" | "20050091118" | "20050160458" | "20050234895" | "20050246231" | "20060155598" | "20060224987" | "20070008332" | "3586771" | "4650977" | "4706121" | "4992940" | "5041312" | "5064999" | "5119188" | "5236199" | "5321749" | "5353016" | "5410326" | "5479268" | "5532735" | "5553242" | "5559548" | "5598523" | "5602596" | "5617570" | "5625781" | "5710887" | "5727129" | "5734719" | "5758126" | "5794210" | "5796252" | "5801702" | "5809204" | "5819220" | "5822014" | "5828839" | "5832208" | "5832459" | "5838314" | "5848396" | "5851149" | "5874906" | "5878222" | "5890175" | "5893064" | "5895454" | "5896133" | "5900905" | "5902353" | "5903729" | "5911145" | "5918014" | "5918213").PN. OR ("5925103" | "5931901" | "5935002" | "5946381" | "5956681" | "5956693" | "5958012" | "5960411" | "5961593" | "5978381" | "5990927" | "6002853" | "6005562" | "6005631" | "6006257" | "6012049" | "6014502" | "6018372" | "6025837" | "6028600" | "6031537" | "6041312" | "6054989" | "6072483" | "6072492" | "6075575" | "6078866" | "6091417" | "6094156" | "6101473" | "6112186" | "6129274" |	US-PGPUB; USPAT; USOCR	OR	OFF	2008/12/08 17:12

		"6138107" | "6142371" | "6151050" | "6151059" | "6151596" | "6151630" | "6154205" | "6160552" | "6167382" | "6172677" | "6177936" | "6193152" | "6198481" | "6199050" | "6199077" | "6199098" | "6205432" | "6205582" | "6211878" | "6212265" | "6223215" | "6226623" | "6226642" | "6229540" | "6237030" | "6243093" | "6253189" | "6260192" | "6266060" | "6269343" | "6269361" | "6269403" | "6271832" | "6282516" | "6285357" | "6285987" | "6286017" | "6286043" | "6288716" | "6292779" | "6292782" | "6292786" | "6292809" | "6295057" | "6298330" | "6300947" | "6301566" | "6312336" | "6314406" | "6317706" | "6330005" | "6330543" | "6333753" | "6334108" | "6334145" | "6336131" | "6337715" | "6345279" | "6356905" | "6381583" | "6388714" | "6396531" | "6397387" | "6401132" | "6407779" | "6411307" | "6411337" | "6415270" | "6417873" | "6418441" | "6421066" | "6421071" | "6421724" | "6438540" | "6445398" | "6460181" | "6476825" | "6477575" | "6484149" | "6487189" | "6487586" | "6490555" | "6509913" | "6516311" | "6522342" | "6532312" | "6535888" | "6570582" | "6571279" | "6583800" | "6606103" | "6606280" | "6606347").PN. OR ("6608633" | "6615247" | "6615248" | "6618039" | "6631523" | "6636246" | "6647373" | "6662224" | "6680714" | "6684062" | "6692358" | "6704727" | "6711552" | "6714534" | "6728731" | "6769989" | "6804786" | "6826572" | "6829646" | "6857102" | "6868525" | "6907556" | "6925595" | "6928610" | "6938073" | "6973669" | "6978263" | "7013435" | "7020845" | "7051281" | "7174512" | "7293276" | "7383515").PN.				
S6	112	touch with slide with function	US-PGPUB; USPAT; USOCR	OR	ON	2008/12/08 17:14
S7	13	("4366475" | "4686332" | "4821030" | "4914624" | "5402151" | "5563632" | "5596346" | "5638060" | "5687331" | "5736974" | "5736976" | "5761485" | "5838973").PN.	US-PGPUB; USPAT; USOCR	OR	OFF	2008/12/08 17:18

S8	168267	object near3 type	US-PGPUB; USPAT; USOCR	OR	OFF	2008/12/08 17:21
S9	5	(file item object) near3 type with open near3 respective	US-PGPUB; USPAT; USOCR	OR	OFF	2008/12/08 17:21
S10	905	open$3 with different with program	US-PGPUB; USPAT; USOCR	OR	OFF	2008/12/08 17:23
S11	2	multiple near3 file near3 selection with open	US-PGPUB; USPAT; USOCR	OR	ON	2008/12/08 17:29
S12	11	applying with command with (plurality multiple) with files	US-PGPUB; USPAT; USOCR	OR	ON	2008/12/08 17:29
S13	29188	(flick stroke) with (open application command)	US-PGPUB; USPAT; EPO; JPO; DERWENT	OR	OFF	2008/12/10 16:52
S14	229	(flick) with (open application command)	US-PGPUB; USPAT; EPO; JPO; DERWENT	OR	ON	2008/12/10 16:54
S15	127	(flick) with (open application command) and @ay<="2002"	US-PGPUB; USPAT; EPO; JPO; DERWENT	OR	ON	2008/12/10 16:56
S16	5	(flick) with (open application command) and @ay<="2002" and "715"/$.ccls.	US-PGPUB; USPAT; EPO; JPO; DERWENT	OR	ON	2008/12/10 16:56
S17	39	(flick) and @ay<="2002" and "715"/$.ccls.	US-PGPUB; USPAT; EPO; JPO; DERWENT	OR	ON	2008/12/10 16:57
S18	961	(flick gesture) and @ay<="2002" and "715"/$.ccls.	US-PGPUB; USPAT; EPO; JPO; DERWENT	OR	ON	2008/12/10 16:58
S19	2324	(flick gesture slide) and @ay<="2002" and "715"/$.ccls.	US-PGPUB; USPAT; EPO; JPO; DERWENT	OR	ON	2008/12/10 16:58
S20	77	(flick gesture slide) and @ay<="2002" and "715"/702,864.ccls.	US-PGPUB; USPAT; EPO; JPO; DERWENT	OR	ON	2008/12/10 16:59

S21	6585	finger near3 (flick gesture slide) and @ay<="2002"	US-PGPUB; USPAT; EPO; JPO; DERWENT	OR	ON	2008/12/10 17:07
S22	86	finger near3 (flick gesture slide) and @ay<="2002" and "715"/$.ccls.	US-PGPUB; USPAT; EPO; JPO; DERWENT	OR	ON	2008/12/10 17:07
S23	0	"5543591,5943052,5907327,4686332".pn.	US-PGPUB; USPAT; EPO; JPO; DERWENT	OR	ON	2008/12/10 17:14
S24	8	("5543591" "5943052" "5907327" "4686332").pn.	US-PGPUB; USPAT; EPO; JPO; DERWENT	OR	ON	2008/12/10 17:15
S25	93647	(glide flick touch swipe) with screen	US-PGPUB; USPAT; EPO; JPO; DERWENT	OR	ON	2008/12/17 13:18
S26	13098	(glide flick touch swipe) with screen with (applications functions)	US-PGPUB; USPAT; EPO; JPO; DERWENT	OR	ON	2008/12/17 13:20
S27	88	(glide flick touch swipe) with screen with (applications functions) and "715"/$.ccls. and @AY="2002"	US-PGPUB; USPAT; EPO; JPO; DERWENT	OR	ON	2008/12/17 13:20
S28	430	(glide flick touch swipe) with screen with (applications functions) and "715"/$.ccls. and @AY<="2002"	US-PGPUB; USPAT; EPO; JPO; DERWENT	OR	ON	2008/12/17 13:20
S29	0	(glide flick swipe) with screen with (applications functions) and "715"/$.ccls. and @AY<="2002"	US-PGPUB; USPAT; EPO; JPO; DERWENT	OR	ON	2008/12/17 13:21
S30	11	(glide flick swipe) with screen and "715"/$.ccls. and @AY<="2002"	US-PGPUB; USPAT; EPO; JPO; DERWENT	OR	ON	2008/12/17 13:21
S31	219	(glide flick gesture swipe) with screen and "715"/$.ccls. and @AY<="2002"	US-PGPUB; USPAT; EPO; JPO; DERWENT	OR	ON	2008/12/17 13:22

S32	299	(glide flick swipe) with screen and @AY<="2002"	US-PGPUB; USPAT; EPO; JPO; DERWENT	OR	ON	2008/12/17 13:25
S33	8	(glide flick swipe) with screen with icon and @AY<="2002"	US-PGPUB; USPAT; EPO; JPO; DERWENT	OR	ON	2008/12/17 13:26
S34	16	("20010011308" | "20030142138" | "20040034801" | "20050253817" | "20050253817" | "20050264833" | "5821933" | "5907327" | "6633310").PN.	US-PGPUB; USPAT; EPO; JPO; DERWENT	OR	ON	2008/12/17 13:30
S35	451	(glide flick swipe) with finger and @AY<="2002"	US-PGPUB; USPAT; EPO; JPO; DERWENT	OR	ON	2008/12/17 13:32
S36	3	(glide flick swipe) with finger and @AY<="2002" and "715"/$.ccls.	US-PGPUB; USPAT; EPO; JPO; DERWENT	OR	ON	2008/12/17 13:32
S37	13	("5250929" | "5568604" | "5579036" | "5612719" | "5661476" | "5748185" | "5767457" | "5883617" | "5928304" | "5943043" | "5943044" | "5995083" | "6049328").PN.	US-PGPUB; USPAT; USOCR	OR	OFF	2008/12/17 14:01
S38	918	715/716.ccls.	US-PGPUB; USPAT; USOCR	OR	OFF	2008/12/17 15:38
S39	7	715/716.ccls. and dvd near menu	US-PGPUB; USPAT; USOCR	OR	OFF	2008/12/17 15:38
S40	9	715/716.ccls. and dvd near menu	US-PGPUB; USPAT; USOCR	OR	ON	2008/12/17 15:38
S41	334	715/716.ccls. and dvd	US-PGPUB; USPAT; USOCR	OR	ON	2008/12/17 15:47
S42	461	715/716.ccls. and menu	US-PGPUB; USPAT; USOCR	OR	ON	2008/12/17 15:47
S43	39	715/716.ccls. and menu and theme	US-PGPUB; USPAT; USOCR	OR	ON	2008/12/17 15:48
S44	243	715/716.ccls. and menu and effects	US-PGPUB; USPAT; USOCR	OR	ON	2008/12/17 15:52

S45	4	715/716.ccls. and menu with theme	US-PGPUB; USPAT; USOCR	OR	ON	2008/12/17 15:53
S46	1	"7200836".pn.	US-PGPUB; USPAT; USOCR	OR	ON	2008/12/17 15:56
S47	1	"20080120546".pn.	US-PGPUB; USPAT; USOCR	OR	ON	2008/12/17 15:57
S48	433	715/864.ccls.	US-PGPUB; USPAT; USOCR	OR	ON	2008/12/21 23:26
S49	60	715/864.ccls. and keyboard and back and icons and files	US-PGPUB; USPAT; USOCR	OR	ON	2008/12/21 23:27
S50	25	715/864.ccls. and keyboard and back and icons and files and removable	US-PGPUB; USPAT; USOCR	OR	ON	2008/12/21 23:27
S51	42	715/864.ccls. and keyboard and icons and files and @ay<="2002"	US-PGPUB; USPAT; USOCR	OR	ON	2008/12/21 23:28
S52	2	"6346935".pn.	US-PGPUB; USPAT; EPO; JPO; DERWENT	OR	OFF	2009/07/05 14:20
S53	21	(glide flick touch swipe) with (coordinat$7) with screen with (applications functions) and "715"/$.ccls. and @AY<="2002"	US-PGPUB; USPAT; EPO; JPO; DERWENT	OR	ON	2009/07/05 14:24
S54	437	(touch finger) with (glide flick touch swipe) with screen with (applications functions) and "715"/$.ccls. and @AY<="2002"	US-PGPUB; USPAT; EPO; JPO; DERWENT	OR	ON	2009/07/05 14:26
S55	0	(touch finger) with (glide flick swipe) with screen with (applications functions) and "715"/$.ccls. and @AY<="2002"	US-PGPUB; USPAT; EPO; JPO; DERWENT	OR	ON	2009/07/05 14:26
S56	3	(touch finger) with (glide flick swipe) with screen and "715"/$.ccls. and @AY<="2002"	US-PGPUB; USPAT; EPO; JPO; DERWENT	OR	ON	2009/07/05 14:27
S57	2	"6140936".pn.	US-PGPUB; USPAT; EPO; JPO; DERWENT	OR	ON	2009/07/05 23:13

S58	2	"6346935".pn.	US-PGPUB; USPAT; EPO; JPO; DERWENT	OR	ON	2009/07/06 10:24
S59	187	files with applications with list with only	US-PGPUB; USPAT; EPO; JPO; DERWENT	OR	ON	2009/07/06 10:28
S60	98	(file near list) with (application near list)	US-PGPUB; USPAT; EPO; JPO; DERWENT	OR	ON	2009/07/06 10:34
S61	502	(file near view) with application	US-PGPUB; USPAT; EPO; JPO; DERWENT	OR	ON	2009/07/06 10:36
S62	15	sort with application near files	US-PGPUB; USPAT; EPO; JPO; DERWENT	OR	ON	2009/07/06 11:14
S63	613	(programs application) with files with (sort show list) with only	US-PGPUB; USPAT; EPO; JPO; DERWENT	OR	ON	2009/07/06 11:18
S64	55	(programs application) with files with (sort show list) with only and "715"/$.ccls.	US-PGPUB; USPAT; EPO; JPO; DERWENT	OR	ON	2009/07/06 11:18
S65	0	seperate with list with data near type	US-PGPUB; USPAT; EPO; JPO; DERWENT	OR	ON	2009/07/06 11:19
S66	5796	list with data near type	US-PGPUB; USPAT; EPO; JPO; DERWENT	OR	ON	2009/07/06 11:19
S67	652	list with data near type and "715"/$.ccls.	US-PGPUB; USPAT; EPO; JPO; DERWENT	OR	ON	2009/07/06 11:19
S68	596	application near list and file near list	US-PGPUB; USPAT; EPO; JPO; DERWENT	OR	ON	2009/07/06 11:20

S69	271	application near list and file near list and @ay<="2002"	US-PGPUB; USPAT; EPO; JPO; DERWENT	OR	ON	2009/07/06 11:22
S70	31	icon with drag with activate	US-PGPUB; USPAT; EPO; JPO; DERWENT	OR	OFF	2009/11/20 14:29
S71	148	icon with drag with activat$7	US-PGPUB; USPAT; EPO; JPO; DERWENT	OR	ON	2009/11/20 14:29
S72	68	icon with drag with activat$7 and @ay<="2002"	US-PGPUB; USPAT; EPO; JPO; DERWENT	OR	ON	2009/11/20 14:30
S73	29	bar with drag with activat$7 and @ay<="2002"	US-PGPUB; USPAT; EPO; JPO; DERWENT	OR	ON	2009/11/20 14:36
S74	81	function with drag with activat$7 and @ay<="2002"	US-PGPUB; USPAT; EPO; JPO; DERWENT	OR	ON	2009/11/20 14:37
S75	26	(dock bar) with (glide swipe) with activat$7	US-PGPUB; USPAT; EPO; JPO; DERWENT	OR	OFF	2009/11/20 14:43
S76	34	(dock bar) with (glide swipe) with activat$7	US-PGPUB; USPAT; EPO; JPO; DERWENT	OR	ON	2009/11/20 14:43
S77	54	(glide swipe) with activat$7 with (function application program)	US-PGPUB; USPAT; EPO; JPO; DERWENT	OR	ON	2009/11/20 14:46
S78	24	(glide swipe) with activat$7 with (function application program) and @ay<="2002"	US-PGPUB; USPAT; EPO; JPO; DERWENT	OR	ON	2009/11/20 14:47
S79	30	(glide swipe drag) with icon with activat$7 with (function application program) and @ay<="2002"	US-PGPUB; USPAT; EPO; JPO; DERWENT	OR	ON	2009/11/20 14:48

S80	2	"7441196".pn.	US-PGPUB; USPAT; EPO; JPO; DERWENT	OR	OFF	2009/11/20 15:14
S81	503	swipe with screen	US-PGPUB; USPAT; EPO; JPO; DERWENT	OR	ON	2009/11/20 15:14
S82	734	(glide swipe) with screen	US-PGPUB; USPAT; EPO; JPO; DERWENT	OR	ON	2009/11/20 15:14
S83	2	"7286063".pn.	US-PGPUB; USPAT; EPO; JPO; DERWENT	OR	ON	2009/11/20 15:14
S84	263	("20010003845" | "20010012286" | "20010016947" | "20010034647" | "20010042002" | "20010044751" | "20010049824" | "20010051903" | "20020007309" | "20020010642" | "20020016750" | "20020029339" | "20020032782" | "20020035174" | "20020038256" | "20020038259" | "20020042914" | "20020042921" | "20020049631" | "20020056098" | "20020059590" | "20020067376" | "20020077177" | "20020078006" | "20020078453" | "20020098834" | "20020116292" | "20020116320" | "20020166122" | "20030046182" | "20030074661" | "20030095525" | "20030126607" | "20030140017" | "20030146940" | "20030149628" | "20030182195" | "20040003412" | "20040098747" | "20040103439" | "20040117831" | "20040128137" | "20040133848" | "20040148625" | "20040204116" | "20040210824" | "20040260689" | "20050010949" | "20050025550" | "20050075932" | "20050086690" | "20050091118" | "20050160458" | "20050234895" | "20050246231" | "20060155598" | "20060224987" | "20070008332" | "3586771" | "4650977" | "4706121" | "4992940" | "5041312" | "5064999" | "5119188" | "5236199" | "5321749" | "5353016" | "5410326" | "5479268" | "5532735" | "5553242" | "5559548" | "5598523" | "5602596" | "5617570" | "5625781" | "5710887" | "5727129" | "5734719" | "5758126" |	US-PGPUB; USPAT; USOCR	OR	OFF	2009/11/20 15:14

"5794210" | "5796252" | "5801702" | "5809204" |
"5819220" | "5822014" | "5828839" | "5832208" |
"5832459" | "5838314" | "5848396" | "5851149" |
"5874906" | "5878222" | "5890175" | "5893064" |
"5895454" | "5896133" | "5900905" | "5902353" |
"5903729" | "5911145" | "5918014" | "5918213").PN.
OR ("5925103" | "5931901" | "5935002" | "5946381" |
"5956681" | "5956693" | "5958012" | "5960411" |
"5961593" | "5978381" | "5990927" | "6002853" |
"6005562" | "6005631" | "6006257" | "6012049" |
"6014502" | "6018372" | "6025837" | "6028600" |
"6031537" | "6041312" | "6054989" | "6072483" |
"6072492" | "6075575" | "6078866" | "6091417" |
"6094156" | "6101473" | "6112186" | "6129274" |
"6138107" | "6142371" | "6151050" | "6151059" |
"6151596" | "6151630" | "6154205" | "6160552" |
"6167382" | "6172677" | "6177936" | "6193152" |
"6198481" | "6199050" | "6199077" | "6199098" |
"6205432" | "6205582" | "6211878" | "6212265" |
"6223215" | "6226623" | "6226642" | "6229540" |
"6237030" | "6243093" | "6253189" | "6260192" |
"6266060" | "6269343" | "6269361" | "6269403" |
"6271832" | "6282516" | "6285357" | "6285987" |
"6286017" | "6286043" | "6288716" | "6292779" |
"6292782" | "6292786" | "6292809" | "6295057" |
"6298330" | "6300947" | "6301566" | "6312336" |
"6314406" | "6317706" | "6330005" | "6330543" |
"6333753" | "6334108" | "6334145" | "6336131" |
"6337715" | "6345279" | "6356905" | "6381583" |
"6388714" | "6396531" | "6397387" | "6401132" |
"6407779" | "6411307" | "6411337" | "6415270" |
"6417873" | "6418441" | "6421066" | "6421071" |
"6421724" | "6438540" | "6445398" | "6460181" |
"6476825" | "6477575" | "6484149" | "6487189" |
"6487586" | "6490555" | "6509913" | "6516311" |
"6522342" | "6532312" | "6535888" | "6570582" |
"6571279" | "6583800" | "6606103" | "6606280" |
"6606347").PN. OR ("6608633" | "6615247" |
"6615248" | "6618039" | "6631523" | "6636246" |

		"6647373" | "6662224" | "6680714" | "6684062" | "6692358" | "6704727" | "6711552" | "6714534" | "6728731" | "6769989" | "6804786" | "6826572" | "6829646" | "6857102" | "6868525" | "6907556" | "6925595" | "6928610" | "6938073" | "6973669" | "6978263" | "7013435" | "7020845" | "7051281" | "7174512" | "7293276" | "7383515").PN.				
S85	131	touch with slide with function	US-PGPUB; USPAT; USOCR	OR	ON	2009/11/20 15:14
S86	13	("4366475" | "4686332" | "4821030" | "4914624" | "5402151" | "5563632" | "5596346" | "5638060" | "5687331" | "5736974" | "5736976" | "5761485" | "5838973").PN.	US-PGPUB; USPAT; USOCR	OR	OFF	2009/11/20 15:14
S87	175604	object near3 type	US-PGPUB; USPAT; USOCR	OR	OFF	2009/11/20 15:14
S88	5	(file item object) near3 type with open near3 respective	US-PGPUB; USPAT; USOCR	OR	OFF	2009/11/20 15:14
S89	997	open$3 with different with program	US-PGPUB; USPAT; USOCR	OR	OFF	2009/11/20 15:14
S90	2	multiple near3 file near3 selection with open	US-PGPUB; USPAT; USOCR	OR	ON	2009/11/20 15:14
S91	12	applying with command with (plurality multiple) with files	US-PGPUB; USPAT; USOCR	OR	ON	2009/11/20 15:14
S92	30944	(flick stroke) with (open application command)	US-PGPUB; USPAT; EPO; JPO; DERWENT	OR	OFF	2009/11/20 15:14
S93	261	(flick) with (open application command)	US-PGPUB; USPAT; EPO; JPO; DERWENT	OR	ON	2009/11/20 15:14
S94	131	(flick) with (open application command) and @ay<="2002"	US-PGPUB; USPAT; EPO; JPO; DERWENT	OR	ON	2009/11/20 15:14

S95	5	(flick) with (open application command) and @ay<="2002" and "715"/$.ccls.	US-PGPUB; USPAT; EPO; JPO; DERWENT	OR	ON	2009/11/20 15:14
S96	39	(flick) and @ay<="2002" and "715"/$.ccls.	US-PGPUB; USPAT; EPO; JPO; DERWENT	OR	ON	2009/11/20 15:14
S97	981	(flick gesture) and @ay<="2002" and "715"/$.ccls.	US-PGPUB; USPAT; EPO; JPO; DERWENT	OR	ON	2009/11/20 15:14
S98	2372	(flick gesture slide) and @ay<="2002" and "715"/$.ccls.	US-PGPUB; USPAT; EPO; JPO; DERWENT	OR	ON	2009/11/20 15:14
S99	78	(flick gesture slide) and @ay<="2002" and "715"/702,864.ccls.	US-PGPUB; USPAT; EPO; JPO; DERWENT	OR	ON	2009/11/20 15:14
S100	6588	finger near3 (flick gesture slide) and @ay<="2002"	US-PGPUB; USPAT; EPO; JPO; DERWENT	OR	ON	2009/11/20 15:14
S101	87	finger near3 (flick gesture slide) and @ay<="2002" and "715"/$.ccls.	US-PGPUB; USPAT; EPO; JPO; DERWENT	OR	ON	2009/11/20 15:14
S102	0	"5543591,5943052,5907327,4686332".pn.	US-PGPUB; USPAT; EPO; JPO; DERWENT	OR	ON	2009/11/20 15:14
S103	8	("5543591" "5943052" "5907327" "4686332").pn.	US-PGPUB; USPAT; EPO; JPO; DERWENT	OR	ON	2009/11/20 15:14
S104	113453	(glide flick touch swipe) with screen	US-PGPUB; USPAT; EPO; JPO; DERWENT	OR	ON	2009/11/20 15:14
S105	16322	(glide flick touch swipe) with screen with (applications functions)	US-PGPUB; USPAT; EPO; JPO; DERWENT	OR	ON	2009/11/20 15:14

S106	92	(glide flick touch swipe) with screen with (applications functions) and "715"/$.ccls. and @AY="2002"	US-PGPUB; USPAT; EPO; JPO; DERWENT	OR	ON	2009/11/20 15:14
S107	439	(glide flick touch swipe) with screen with (applications functions) and "715"/$.ccls. and @AY<="2002"	US-PGPUB; USPAT; EPO; JPO; DERWENT	OR	ON	2009/11/20 15:14
S108	0	(glide flick swipe) with screen with (applications functions) and "715"/$.ccls. and @AY<="2002"	US-PGPUB; USPAT; EPO; JPO; DERWENT	OR	ON	2009/11/20 15:14
S109	11	(glide flick swipe) with screen and "715"/$.ccls. and @AY<="2002"	US-PGPUB; USPAT; EPO; JPO; DERWENT	OR	ON	2009/11/20 15:14
S110	219	(glide flick gesture swipe) with screen and "715"/$.ccls. and @AY<="2002"	US-PGPUB; USPAT; EPO; JPO; DERWENT	OR	ON	2009/11/20 15:14
S111	302	(glide flick swipe) with screen and @AY<="2002"	US-PGPUB; USPAT; EPO; JPO; DERWENT	OR	ON	2009/11/20 15:14
S112	8	(glide flick swipe) with screen with icon and @AY<="2002"	US-PGPUB; USPAT; EPO; JPO; DERWENT	OR	ON	2009/11/20 15:14
S113	16	("20010011308" | "20030142138" | "20040034801" | "20050253817" | "20050253817" | "20050264833" | "5821933" | "5907327" | "6633310").PN.	US-PGPUB; USPAT; EPO; JPO; DERWENT	OR	ON	2009/11/20 15:14
S114	452	(glide flick swipe) with finger and @AY<="2002"	US-PGPUB; USPAT; EPO; JPO; DERWENT	OR	ON	2009/11/20 15:14
S115	3	(glide flick swipe) with finger and @AY<="2002" and "715"/$.ccls.	US-PGPUB; USPAT; EPO; JPO; DERWENT	OR	ON	2009/11/20 15:14
S116	13	("5250929" | "5568604" | "5579036" | "5612719" | "5661476" | "5748185" | "5767457" | "5883617" | "5928304" | "5943043" | "5943044" | "5995083" | "6049328").PN.	US-PGPUB; USPAT; USOCR	OR	OFF	2009/11/20 15:14

S117	1144	715/716.ccls.	US-PGPUB; USPAT; USOCR	OR	OFF	2009/11/20 15:14
S118	8	715/716.ccls. and dvd near menu	US-PGPUB; USPAT; USOCR	OR	OFF	2009/11/20 15:14
S119	10	715/716.ccls. and dvd near menu	US-PGPUB; USPAT; USOCR	OR	ON	2009/11/20 15:14
S120	429	715/716.ccls. and dvd	US-PGPUB; USPAT; USOCR	OR	ON	2009/11/20 15:14
S121	587	715/716.ccls. and menu	US-PGPUB; USPAT; USOCR	OR	ON	2009/11/20 15:14
S122	55	715/716.ccls. and menu and theme	US-PGPUB; USPAT; USOCR	OR	ON	2009/11/20 15:14
S123	311	715/716.ccls. and menu and effects	US-PGPUB; USPAT; USOCR	OR	ON	2009/11/20 15:14
S124	6	715/716.ccls. and menu with theme	US-PGPUB; USPAT; USOCR	OR	ON	2009/11/20 15:14
S125	1	"7200836".pn.	US-PGPUB; USPAT; USOCR	OR	ON	2009/11/20 15:14
S126	1	"20080120546".pn.	US-PGPUB; USPAT; USOCR	OR	ON	2009/11/20 15:14
S127	504	715/864.ccls.	US-PGPUB; USPAT; USOCR	OR	ON	2009/11/20 15:14
S128	69	715/864.ccls. and keyboard and back and icons and files	US-PGPUB; USPAT; USOCR	OR	ON	2009/11/20 15:14
S129	29	715/864.ccls. and keyboard and back and icons and files and removable	US-PGPUB; USPAT; USOCR	OR	ON	2009/11/20 15:14
S130	44	715/864.ccls. and keyboard and icons and files and @ay<="2002"	US-PGPUB; USPAT; USOCR	OR	ON	2009/11/20 15:14
S131	2	"6346935".pn.	US-PGPUB; USPAT; EPO; JPO; DERWENT	OR	OFF	2009/11/20 15:14

S132	21	(glide flick touch swipe) with (coordinat$7) with screen with (applications functions) and "715"/$.ccls. and @AY<="2002"	US-PGPUB; USPAT; EPO; JPO; DERWENT	OR	ON	2009/11/20 15:14
S133	439	(touch finger) with (glide flick touch swipe) with screen with (applications functions) and "715"/$.ccls. and @AY<="2002"	US-PGPUB; USPAT; EPO; JPO; DERWENT	OR	ON	2009/11/20 15:14
S134	0	(touch finger) with (glide flick swipe) with screen with (applications functions) and "715"/$.ccls. and @AY<="2002"	US-PGPUB; USPAT; EPO; JPO; DERWENT	OR	ON	2009/11/20 15:14
S135	3	(touch finger) with (glide flick swipe) with screen and "715"/$.ccls. and @AY<="2002"	US-PGPUB; USPAT; EPO; JPO; DERWENT	OR	ON	2009/11/20 15:14
S136	2	"6140936".pn.	US-PGPUB; USPAT; EPO; JPO; DERWENT	OR	ON	2009/11/20 15:14
S137	2	"6346935".pn.	US-PGPUB; USPAT; EPO; JPO; DERWENT	OR	ON	2009/11/20 15:14
S138	195	files with applications with list with only	US-PGPUB; USPAT; EPO; JPO; DERWENT	OR	ON	2009/11/20 15:14
S139	102	(file near list) with (application near list)	US-PGPUB; USPAT; EPO; JPO; DERWENT	OR	ON	2009/11/20 15:14
S140	535	(file near view) with application	US-PGPUB; USPAT; EPO; JPO; DERWENT	OR	ON	2009/11/20 15:14
S141	16	sort with application near files	US-PGPUB; USPAT; EPO; JPO; DERWENT	OR	ON	2009/11/20 15:14
S142	632	(programs application) with files with (sort show list) with only	US-PGPUB; USPAT; EPO; JPO; DERWENT	OR	ON	2009/11/20 15:14

S143	57	(programs application) with files with (sort show list) with only and "715"/$.ccls.	US-PGPUB; USPAT; EPO; JPO; DERWENT	OR	ON	2009/11/20 15:14
S144	0	seperate with list with data near type	US-PGPUB; USPAT; EPO; JPO; DERWENT	OR	ON	2009/11/20 15:14
S145	6088	list with data near type	US-PGPUB; USPAT; EPO; JPO; DERWENT	OR	ON	2009/11/20 15:14
S146	684	list with data near type and "715"/$.ccls.	US-PGPUB; USPAT; EPO; JPO; DERWENT	OR	ON	2009/11/20 15:14
S147	635	application near list and file near list	US-PGPUB; USPAT; EPO; JPO; DERWENT	OR	ON	2009/11/20 15:14
S148	273	application near list and file near list and @ay<="2002"	US-PGPUB; USPAT; EPO; JPO; DERWENT	OR	ON	2009/11/20 15:14
S149	2	"20030160832".pn.	US-PGPUB; USPAT; EPO; JPO; DERWENT	OR	OFF	2009/11/20 15:43
S150	4858	touch with (flick gesture slide swipe across) and @ay<"2002"	US-PGPUB; USPAT; EPO; JPO; DERWENT	OR	ON	2010/05/23 17:18
S151	4625	touch with (flick slide swipe across) and @ay<"2002"	US-PGPUB; USPAT; EPO; JPO; DERWENT	OR	ON	2010/05/23 17:19
S152	2801	touch with (flick slide swipe) and @ay<"2002"	US-PGPUB; USPAT; EPO; JPO; DERWENT	OR	ON	2010/05/23 17:19
S153	2777	touch with (slide swipe) and @ay<"2002"	US-PGPUB; USPAT; EPO; JPO; DERWENT	OR	ON	2010/05/23 17:19

S154	54	touch with (swipe) and @ay<"2002"	US-PGPUB; USPAT; EPO; JPO; DERWENT	OR	ON	2010/05/23 17:20
S155	1011	touch near2 (flick slide swipe across) and @ay<"2002"	US-PGPUB; USPAT; EPO; JPO; DERWENT	OR	ON	2010/05/23 17:20
S156	2	touch near2 (flick slide swipe across) with activate and @ay<"2002"	US-PGPUB; USPAT; EPO; JPO; DERWENT	OR	ON	2010/05/23 17:21
S157	29	touch near2 (flick slide swipe across) with function and @ay<"2002"	US-PGPUB; USPAT; EPO; JPO; DERWENT	OR	ON	2010/05/23 17:21
S158	2	"5053758".pn.	US-PGPUB; USPAT; EPO; JPO; DERWENT	OR	ON	2010/05/23 17:33
S159	32	touch near2 (flick glide slide swipe across) with function and @ay<"2002"	US-PGPUB; USPAT; EPO; JPO; DERWENT	OR	ON	2010/05/23 17:36
S160	3	touch near2 (glide) with function and @ay<"2002"	US-PGPUB; USPAT; EPO; JPO; DERWENT	OR	ON	2010/05/23 17:36
S161	8	neonode.as.	US-PGPUB; USPAT; EPO; JPO; DERWENT	OR	ON	2010/05/23 17:56

EAST Search History (Interference)

Ref #	Hits	Search Query	DBs	Default Operator	Plurals	Time Stamp
L17	0	touch with glide with activat$7.clm.	USPAT; UPAD	OR	ON	2011/06/06 08:36
L18	9	touch with glide .clm.	USPAT; UPAD	OR	ON	2011/06/06 08:36
L19	0	touch with glide with away .clm.	USPAT; UPAD	OR	ON	2011/06/06 08:37
L20	91	glide with away .clm.	USPAT; UPAD	OR	ON	2011/06/06 08:37

L21	27	glide with activat$7.clm.	USPAT; UPAD	OR	ON	2011/06/06 08:37
L22	333	slide with unlock.clm.	USPAT; UPAD	OR	ON	2011/06/06 08:39
L23	1	slide with unlock with touch.clm.	USPAT; UPAD	OR	ON	2011/06/06 08:40

6/6/11 8:40:39 AM
C:\Documents and Settings\RPitaro\My Documents\EAST\Workspaces\10315250.wsp

Index of Claims	Application/Control No.	Applicant(s)/Patent Under Reexamination
	10315250	GOERTZ, MAGNUS
	Examiner	Art Unit
	Ryan F Pitaro	2174

✓	Rejected	-	Cancelled	N	Non-Elected	A	Appeal
=	Allowed	÷	Restricted	I	Interference	O	Objected

☐ Claims renumbered in the same order as presented by applicant ☐ CPA ☐ T.D. ☐ R.1.47

CLAIM		DATE								
Final	Original	11/09/2007	06/23/2008	12/21/2008	07/06/2009	11/20/2009	05/23/2010	06/06/2011		
	1	✓	✓	✓	✓	✓	✓	=		
	2	✓	✓	✓	✓	✓	✓	=		
	3	✓	✓	✓	✓	✓	✓	=		
	4	✓	✓	✓	✓	✓	✓	=		
	5	✓	✓	✓	✓	✓	✓	=		
	6	✓	✓	✓	✓	✓	✓	=		
	7	✓	✓	✓	✓	✓	✓	=		
	8	✓	✓	✓	✓	✓	✓	=		
	9	✓	✓	✓	✓	✓	✓	=		
	10	✓	✓	✓	✓	✓	✓	=		
	11	✓	✓	✓	✓	✓	✓	=		
	12	✓	✓	✓	✓	✓	✓	=		
	13	✓	✓	✓	✓	✓	✓	=		
	14	✓	✓	✓	✓	✓	✓	=		
	15	✓	✓	✓	✓	✓	✓	✓		
	16	✓	✓	✓	✓	✓	✓	✓		
	17	✓	✓	✓	-	-	-	-		
	18	✓	✓	✓	✓	✓	✓	=		
	19		÷	N	-			-		
	20		÷	N	-			-		
	21		÷	N	-			-		
	22		÷	N	-			-		
	23		÷	N	-			-		
	24		÷	N	-			-		
	25		÷	N	-			-		
	26		÷	N	-			-		
	27		÷	N	-			-		
	28		÷	N	-			-		
	29		÷	N	-			-		
	30		÷	N	-			-		
	31		÷	N	-			-		
	32		÷	N	-			-		
	33		÷	N	-			-		
	34		÷	N	-			-		
	35		÷	N	-			-		
	36		÷	N	-			-		

Index of Claims	Application/Control No.	Applicant(s)/Patent Under Reexamination
	10315250	GOERTZ, MAGNUS
	Examiner	Art Unit
	Ryan F Pitaro	2174

✓	Rejected	-	Cancelled	N	Non-Elected	A	Appeal
=	Allowed	÷	Restricted	I	Interference	O	Objected

☐ Claims renumbered in the same order as presented by applicant ☐ CPA ☐ T.D. ☐ R.1.47

CLAIM		DATE								
Final	Original	11/09/2007	06/23/2008	12/21/2008	07/06/2009	11/20/2009	05/23/2010	06/06/2011		
	37		÷	N	-			-		
	38		÷	N	-			-		
	39		÷	N	-			-		
	40		÷	N	-			-		
	41		÷	N	-			-		
	42		÷	N	-			-		
	43		÷	N	-			-		
	44		÷	N	-			-		
	45		÷	N	-			-		
	46		÷	N	-			-		
	47		÷	N	-			-		
	48							=		
	49							=		
	50									
	51									
	52									
	53									
	54									
	55									
	56									
	57									
	58									
	59									
	60									
	61									
	62									
	63									
	64									
	65									

Search Notes	Application/Control No.	Applicant(s)/Patent Under Reexamination
	10315250	GOERTZ, MAGNUS
	Examiner	Art Unit
	Ryan F Pitaro	2174

SEARCHED			
Class	Subclass	Date	Examiner
Update	Search	11/8/2007	RFP
Update	Search	6/17/2008	RFP
Update	Search	12/21/2008	RFP
Update	Search	4/22/2009	RFP
Update	Search	11/20/2009	RFP
Update	Search	5/22/2010	RFP
Update	Search	6/5/2011	RFP

SEARCH NOTES		
Search Notes	Date	Examiner
Update Search	11/8/2007	RFP
Update Search	6/17/2008	RFP
EAST	12/21/2008	RFP
Internet	12/21/2008	RFP
Safari Online Books	12/21/2008	RFP
IEEE	12/21/2008	RFP
ACM	12/21/2008	RFP
Update Search	4/22/2009	RFP
Update Search	11/20/2009	RFP
Update Search	5/22/2010	RFP
Internet Search	5/22/2010	RFP
Update Search	6/5/2011	RFP
STIC Search	6/5/2011	RFP
Fast and Focus Search	6/5/2011	RFP

INTERFERENCE SEARCH			
Class	Subclass	Date	Examiner
Interference	Search	6/5/2011	RFP

PTO/SB/08a (01-10)
Approved for use through 07/31/2012. OMB 0651-0031
U.S. Patent and Trademark Office; U.S. DEPARTMENT OF COMMERCE

Under the Paperwork Reduction Act of 1995, no persons are required to respond to a collection of information unless it contains a valid OMB control number.

INFORMATION DISCLOSURE STATEMENT BY APPLICANT
(Not for submission under 37 CFR 1.99)

Application Number	10315250
Filing Date	2002-12-10
First Named Inventor	Magnus Goertz
Art Unit	2174
Examiner Name	PITARO, RYAN F
Attorney Docket Number	NEONODE.P004

U.S.PATENTS Remove

Examiner Initial*	Cite No	Patent Number	Kind Code[1]	Issue Date	Name of Patentee or Applicant of cited Document	Pages,Columns,Lines where Relevant Passages or Relevant Figures Appear
/R.P./	1	4790028	B1	1988-12-06	Ramage	
/R.P./	2	5053758	B1	1991-10-01	Cornett et al.	
/R.P./	3	5283558	B1	1994-02-01	Chan	

If you wish to add additional U.S. Patent citation information please click the Add button. Add

U.S.PATENT APPLICATION PUBLICATIONS Remove

Examiner Initial*	Cite No	Publication Number	Kind Code[1]	Publication Date	Name of Patentee or Applicant of cited Document	Pages,Columns,Lines where Relevant Passages or Relevant Figures Appear
/R.P./	1	20010002694	A1	2001-06-07	Nakazawa et al.	
/R.P./	2	20010022579	A1	2001-09-20	Hirabayashi	
/R.P./	3	20010026268	A1	2001-10-04	Ito	

INFORMATION DISCLOSURE STATEMENT BY APPLICANT (Not for submission under 37 CFR 1.99)		
	Application Number	10315250
	Filing Date	2002-12-10
	First Named Inventor	Magnus Goertz
	Art Unit	2174
	Examiner Name	PITARO, RYAN F
	Attorney Docket Number	NEONODE.P004

/R.P./	4	20010028344	A1	2001-10-11	Iwamoto et al.	
/R.P./	5	20010055006	A1	2001-12-27	Sano et al.	

If you wish to add additional U.S. Published Application citation information please click the Add button. Add

FOREIGN PATENT DOCUMENTS Remove

Examiner Initial*	Cite No	Foreign Document Number[3]	Country Code[2] i	Kind Code[4]	Publication Date	Name of Patentee or Applicant of cited Document	Pages,Columns,Lines where Relevant Passages or Relevant Figures Appear	T[5]
	1							☐

If you wish to add additional Foreign Patent Document citation information please click the Add button Add

NON-PATENT LITERATURE DOCUMENTS Remove

Examiner Initials*	Cite No	Include name of the author (in CAPITAL LETTERS), title of the article (when appropriate), title of the item (book, magazine, journal, serial, symposium, catalog, etc), date, pages(s), volume-issue number(s), publisher, city and/or country where published.	T[5]
	1		☐

If you wish to add additional non-patent literature document citation information please click the Add button Add

EXAMINER SIGNATURE

Examiner Signature	/Ryan Pitaro/	Date Considered	06/06/2011

*EXAMINER: Initial if reference considered, whether or not citation is in conformance with MPEP 609. Draw line through a citation if not in conformance and not considered. Include copy of this form with next communication to applicant.

[1] See Kind Codes of USPTO Patent Documents at www.USPTO.GOV or MPEP 901.04. [2] Enter office that issued the document, by the two-letter code (WIPO Standard ST.3). [3] For Japanese patent documents, the indication of the year of the reign of the Emperor must precede the serial number of the patent document. [4] Kind of document by the appropriate symbols as indicated on the document under WIPO Standard ST.16 if possible. [5] Applicant is to place a check mark here if English language translation is attached.

Attorney's Docket No.: NEONODE.P004 *PATENT*

IN THE UNITED STATES PATENT AND TRADEMARK OFFICE

In Re Patent Application of:	)	
	)	Examiner: Ryan F. Pitaro
Magnus Goertz	)	
	)	Art Unit: 2174
Application No: 10/315,250	)	
	)	
Filed: December 10, 2002	)	
	)	
For: USER INTERFACE FOR MOBILE HANDHELD COMPUTER UNIT	)	
	)	

Commissioner for Patents
P. O. Box 1450
Alexandria, VA 22313-1450

SUMMARY OF INTERVIEW

Sir:

Applicant expresses appreciation to the Examiner for the courtesy of an interview granted to applicant's representative Marc A. Berger (Reg. No. 44,029). The interview was held by telephone on Thursday, May 5, 2011. The substance of the interview is contained in the Interview Summary, Form PTOL-413, prepared and entered by the Examiner on May 11, 2011.

Respectfully submitted,

SOQUEL GROUP LLC

Dated: May 29, 2011

/Marc A. Berger/
Marc A. Berger
Reg. No. 44,029

P.O. Box 691
Soquel, CA 95073
(831) 426-8200
Customer No. 75660

Electronic Acknowledgement Receipt

EFS ID:	10190005
Application Number:	10315250
International Application Number:	
Confirmation Number:	1226
Title of Invention:	User interface
First Named Inventor/Applicant Name:	Magnus Goertz
Customer Number:	75660
Filer:	Marc Aron Berger
Filer Authorized By:	
Attorney Docket Number:	NEONODE.P004
Receipt Date:	29-MAY-2011
Filing Date:	10-DEC-2002
Time Stamp:	02:18:45
Application Type:	Utility under 35 USC 111(a)

Payment information:

Submitted with Payment	no

File Listing:

Document Number	Document Description	File Name	File Size(Bytes)/ Message Digest	Multi Part /.zip	Pages (if appl.)
1	Applicant summary of interview with examiner	NEONODE-P004_SummaryOfInterview.pdf	40187 6af1a4526010a27c2e1f40a8043afc23d5d2aa83	no	1

Warnings:	
Information:	

Total Files Size (in bytes):	40187

This Acknowledgement Receipt evidences receipt on the noted date by the USPTO of the indicated documents, characterized by the applicant, and including page counts, where applicable. It serves as evidence of receipt similar to a Post Card, as described in MPEP 503.

New Applications Under 35 U.S.C. 111
If a new application is being filed and the application includes the necessary components for a filing date (see 37 CFR 1.53(b)-(d) and MPEP 506), a Filing Receipt (37 CFR 1.54) will be issued in due course and the date shown on this Acknowledgement Receipt will establish the filing date of the application.

National Stage of an International Application under 35 U.S.C. 371
If a timely submission to enter the national stage of an international application is compliant with the conditions of 35 U.S.C. 371 and other applicable requirements a Form PCT/DO/EO/903 indicating acceptance of the application as a national stage submission under 35 U.S.C. 371 will be issued in addition to the Filing Receipt, in due course.

New International Application Filed with the USPTO as a Receiving Office
If a new international application is being filed and the international application includes the necessary components for an international filing date (see PCT Article 11 and MPEP 1810), a Notification of the International Application Number and of the International Filing Date (Form PCT/RO/105) will be issued in due course, subject to prescriptions concerning national security, and the date shown on this Acknowledgement Receipt will establish the international filing date of the application.

PLUS Search Results for S/N 10315250, Searched Thu May 12 15:25:52 EDT 2011

The Patent Linguistics Utility System (PLUS) is a USPTO automated search system for U.S. Patents from 1971 to the present PLUS is a query-by-example search system which produces a list of patents that are most closely related linguistically to the application searched. This search was prepared by the staff of the Scientific and Technical Information Center, SIRA.

5434777 99
5608624 99
5625814 99
6023779 99
4490810 99
5654529 99
5949408 99
4922237 99
5257015 99
5382962 99
5496992 99
5515052 99
5536930 99
5550650 99
5615384 99
5677952 99
5923866 99
5933478 99
5970427 99
5974238 99
5983354 99
6052120 99
6084691 99
6084584 99
6094156 99
6098095 99
6106564 99
6122216 99
6128661 99
6151015 99
6166734 99
6201199 99
6236917 99
6336137 99
6377685 99
6442570 99
6468219 99
6717572 99
6889362 99
6912659 99
6965921 99
7054487 99
7123742 99
7130980 99
7203828 99
7210032 99
7302560 99
7424588 99
7430659 99
7539864 99

UNITED STATES PATENT AND TRADEMARK OFFICE

UNITED STATES DEPARTMENT OF COMMERCE
United States Patent and Trademark Office
Address: COMMISSIONER FOR PATENTS
P.O. Box 1450
Alexandria, Virginia 22313-1450
www.uspto.gov

APPLICATION NO.	FILING DATE	FIRST NAMED INVENTOR	ATTORNEY DOCKET NO.	CONFIRMATION NO.
10/315,250	12/10/2002	Magnus Goertz	NEONODE.P004	1226

75660 7590 05/11/2011

Soquel Group, LLC
P.O. Box 691
Soquel, CA 95073

EXAMINER	
PITARO, RYAN F	
ART UNIT	PAPER NUMBER
2171	

MAIL DATE	DELIVERY MODE
05/11/2011	PAPER

Please find below and/or attached an Office communication concerning this application or proceeding.

The time period for reply, if any, is set in the attached communication.

Interview Summary	Application No.	Applicant(s)	
	10/315,250	GOERTZ, MAGNUS	
	Examiner	Art Unit	
	RYAN F. PITARO	2171	

All participants (applicant, applicant's representative, PTO personnel):

(1) *RYAN F. PITARO*. (3)_____.

(2) *Marc Berger*. (4)_____.

Date of Interview: *05 May 2011*.

Type: a)☒ Telephonic b)☐ Video Conference
c)☐ Personal [copy given to: 1)☐ applicant 2)☐ applicant's representative]

Exhibit shown or demonstration conducted: d)☐ Yes e)☐ No.
If Yes, brief description: _____.

Claim(s) discussed: *1*.

Identification of prior art discussed: *Nakajima,Hoshino,Hirshberg,Carlson, Venolia* .

Agreement with respect to the claims f)☒ was reached. g)☐ was not reached. h)☐ N/A.

Substance of Interview including description of the general nature of what was agreed to if an agreement was reached, or any other comments: *Differences between the prior art of record and the claimed application were discussed in view of the claim amendments. Agreement was reached that the prior art fails to teach the claimed amendments*.

(A fuller description, if necessary, and a copy of the amendments which the examiner agreed would render the claims allowable, if available, must be attached. Also, where no copy of the amendments that would render the claims allowable is available, a summary thereof must be attached.)

THE FORMAL WRITTEN REPLY TO THE LAST OFFICE ACTION MUST INCLUDE THE SUBSTANCE OF THE INTERVIEW. (See MPEP Section 713.04). If a reply to the last Office action has already been filed, APPLICANT IS GIVEN A NON-EXTENDABLE PERIOD OF THE LONGER OF ONE MONTH OR THIRTY DAYS FROM THIS INTERVIEW DATE, OR THE MAILING DATE OF THIS INTERVIEW SUMMARY FORM, WHICHEVER IS LATER, TO FILE A STATEMENT OF THE SUBSTANCE OF THE INTERVIEW. See Summary of Record of Interview requirements on reverse side or on attached sheet.

/Ryan F Pitaro/ Primary Examiner, Art Unit 2171	

Summary of Record of Interview Requirements

Manual of Patent Examining Procedure (MPEP), Section 713.04, Substance of Interview Must be Made of Record
A complete written statement as to the substance of any face-to-face, video conference, or telephone interview with regard to an application must be made of record in the application whether or not an agreement with the examiner was reached at the interview.

Title 37 Code of Federal Regulations (CFR) § 1.133 Interviews
Paragraph (b)

In every instance where reconsideration is requested in view of an interview with an examiner, a complete written statement of the reasons presented at the interview as warranting favorable action must be filed by the applicant. An interview does not remove the necessity for reply to Office action as specified in §§ 1.111, 1.135. (35 U.S.C. 132)

37 CFR §1.2 Business to be transacted in writing.
All business with the Patent or Trademark Office should be transacted in writing. The personal attendance of applicants or their attorneys or agents at the Patent and Trademark Office is unnecessary. The action of the Patent and Trademark Office will be based exclusively on the written record in the Office. No attention will be paid to any alleged oral promise, stipulation, or understanding in relation to which there is disagreement or doubt.

The action of the Patent and Trademark Office cannot be based exclusively on the written record in the Office if that record is itself incomplete through the failure to record the substance of interviews.

It is the responsibility of the applicant or the attorney or agent to make the substance of an interview of record in the application file, unless the examiner indicates he or she will do so. It is the examiner's responsibility to see that such a record is made and to correct material inaccuracies which bear directly on the question of patentability.

Examiners must complete an Interview Summary Form for each interview held where a matter of substance has been discussed during the interview by checking the appropriate boxes and filling in the blanks. Discussions regarding only procedural matters, directed solely to restriction requirements for which interview recordation is otherwise provided for in Section 812.01 of the Manual of Patent Examining Procedure, or pointing out typographical errors or unreadable script in Office actions or the like, are excluded from the interview recordation procedures below. Where the substance of an interview is completely recorded in an Examiners Amendment, no separate Interview Summary Record is required.

The Interview Summary Form shall be given an appropriate Paper No., placed in the right hand portion of the file, and listed on the "Contents" section of the file wrapper. In a personal interview, a duplicate of the Form is given to the applicant (or attorney or agent) at the conclusion of the interview. In the case of a telephone or video-conference interview, the copy is mailed to the applicant's correspondence address either with or prior to the next official communication. If additional correspondence from the examiner is not likely before an allowance or if other circumstances dictate, the Form should be mailed promptly after the interview rather than with the next official communication.

The Form provides for recordation of the following information:
- Application Number (Series Code and Serial Number)
- Name of applicant
- Name of examiner
- Date of interview
- Type of interview (telephonic, video-conference, or personal)
- Name of participant(s) (applicant, attorney or agent, examiner, other PTO personnel, etc.)
- An indication whether or not an exhibit was shown or a demonstration conducted
- An identification of the specific prior art discussed
- An indication whether an agreement was reached and if so, a description of the general nature of the agreement (may be by attachment of a copy of amendments or claims agreed as being allowable). Note: Agreement as to allowability is tentative and does not restrict further action by the examiner to the contrary.
- The signature of the examiner who conducted the interview (if Form is not an attachment to a signed Office action)

It is desirable that the examiner orally remind the applicant of his or her obligation to record the substance of the interview of each case. It should be noted, however, that the Interview Summary Form will not normally be considered a complete and proper recordation of the interview unless it includes, or is supplemented by the applicant or the examiner to include, all of the applicable items required below concerning the substance of the interview.

A complete and proper recordation of the substance of any interview should include at least the following applicable items:
1) A brief description of the nature of any exhibit shown or any demonstration conducted,
2) an identification of the claims discussed,
3) an identification of the specific prior art discussed,
4) an identification of the principal proposed amendments of a substantive nature discussed, unless these are already described on the Interview Summary Form completed by the Examiner,
5) a brief identification of the general thrust of the principal arguments presented to the examiner,
   (The identification of arguments need not be lengthy or elaborate. A verbatim or highly detailed description of the arguments is not required. The identification of the arguments is sufficient if the general nature or thrust of the principal arguments made to the examiner can be understood in the context of the application file. Of course, the applicant may desire to emphasize and fully describe those arguments which he or she feels were or might be persuasive to the examiner.)
6) a general indication of any other pertinent matters discussed, and
7) if appropriate, the general results or outcome of the interview unless already described in the Interview Summary Form completed by the examiner.

Examiners are expected to carefully review the applicant's record of the substance of an interview. If the record is not complete and accurate, the examiner will give the applicant an extendable one month time period to correct the record.

Examiner to Check for Accuracy

If the claims are allowable for other reasons of record, the examiner should send a letter setting forth the examiner's version of the statement attributed to him or her. If the record is complete and accurate, the examiner should place the indication, "Interview Record OK" on the paper recording the substance of the interview along with the date and the examiner's initials.

PTO/SB/08a (01-10)
Approved for use through 07/31/2012. OMB 0651-0031
U.S. Patent and Trademark Office; U.S. DEPARTMENT OF COMMERCE

Under the Paperwork Reduction Act of 1995, no persons are required to respond to a collection of information unless it contains a valid OMB control number.

INFORMATION DISCLOSURE STATEMENT BY APPLICANT
(Not for submission under 37 CFR 1.99)

Application Number	10315250
Filing Date	2002-12-10
First Named Inventor	Magnus Goertz
Art Unit	2174
Examiner Name	PITARO, RYAN F
Attorney Docket Number	NEONODE.P004

U.S.PATENTS Remove

Examiner Initial*	Cite No	Patent Number	Kind Code[1]	Issue Date	Name of Patentee or Applicant of cited Document	Pages,Columns,Lines where Relevant Passages or Relevant Figures Appear
	1	4790028	B1	1988-12-06	Ramage	
	2	5053758	B1	1991-10-01	Cornett et al.	
	3	5283558	B1	1994-02-01	Chan	

If you wish to add additional U.S. Patent citation information please click the Add button. Add

U.S.PATENT APPLICATION PUBLICATIONS Remove

Examiner Initial*	Cite No	Publication Number	Kind Code[1]	Publication Date	Name of Patentee or Applicant of cited Document	Pages,Columns,Lines where Relevant Passages or Relevant Figures Appear
	1	20010002694	A1	2001-06-07	Nakazawa et al.	
	2	20010022579	A1	2001-09-20	Hirabayashi	
	3	20010026268	A1	2001-10-04	Ito	

INFORMATION DISCLOSURE STATEMENT BY APPLICANT (Not for submission under 37 CFR 1.99)		
	Application Number	10315250
	Filing Date	2002-12-10
	First Named Inventor	Magnus Goertz
	Art Unit	2174
	Examiner Name	PITARO, RYAN F
	Attorney Docket Number	NEONODE.P004

	4	20010028344	A1	2001-10-11	Iwamoto et al.	
	5	20010055006	A1	2001-12-27	Sano et al.	

If you wish to add additional U.S. Published Application citation information please click the Add button. Add

FOREIGN PATENT DOCUMENTS Remove

Examiner Initial*	Cite No	Foreign Document Number[3]	Country Code[2] i	Kind Code[4]	Publication Date	Name of Patentee or Applicant of cited Document	Pages,Columns,Lines where Relevant Passages or Relevant Figures Appear	T[5]
	1							☐

If you wish to add additional Foreign Patent Document citation information please click the Add button Add

NON-PATENT LITERATURE DOCUMENTS Remove

Examiner Initials*	Cite No	Include name of the author (in CAPITAL LETTERS), title of the article (when appropriate), title of the item (book, magazine, journal, serial, symposium, catalog, etc), date, pages(s), volume-issue number(s), publisher, city and/or country where published.	T[5]
	1		☐

If you wish to add additional non-patent literature document citation information please click the Add button Add

EXAMINER SIGNATURE

Examiner Signature		Date Considered	

*EXAMINER: Initial if reference considered, whether or not citation is in conformance with MPEP 609. Draw line through a citation if not in conformance and not considered. Include copy of this form with next communication to applicant.

[1] See Kind Codes of USPTO Patent Documents at www.USPTO.GOV or MPEP 901.04. [2] Enter office that issued the document, by the two-letter code (WIPO Standard ST.3). [3] For Japanese patent documents, the indication of the year of the reign of the Emperor must precede the serial number of the patent document. [4] Kind of document by the appropriate symbols as indicated on the document under WIPO Standard ST.16 if possible. [5] Applicant is to place a check mark here if English language translation is attached.

INFORMATION DISCLOSURE STATEMENT BY APPLICANT (Not for submission under 37 CFR 1.99)		
	Application Number	10315250
	Filing Date	2002-12-10
	First Named Inventor	Magnus Goertz
	Art Unit	2174
	Examiner Name	PITARO, RYAN F
	Attorney Docket Number	NEONODE.P004

CERTIFICATION STATEMENT

Please see 37 CFR 1.97 and 1.98 to make the appropriate selection(s):

☐ That each item of information contained in the information disclosure statement was first cited in any communication from a foreign patent office in a counterpart foreign application not more than three months prior to the filing of the information disclosure statement. See 37 CFR 1.97(e)(1).

OR

☐ That no item of information contained in the information disclosure statement was cited in a communication from a foreign patent office in a counterpart foreign application, and, to the knowledge of the person signing the certification after making reasonable inquiry, no item of information contained in the information disclosure statement was known to any individual designated in 37 CFR 1.56(c) more than three months prior to the filing of the information disclosure statement. See 37 CFR 1.97(e)(2).

☐ See attached certification statement.

☒ The fee set forth in 37 CFR 1.17 (p) has been submitted herewith.

☐ A certification statement is not submitted herewith.

SIGNATURE

A signature of the applicant or representative is required in accordance with CFR 1.33, 10.18. Please see CFR 1.4(d) for the form of the signature.

Signature	/Marc A. Berger/	Date (YYYY-MM-DD)	2010-12-21
Name/Print	Marc A. Berger	Registration Number	44029

This collection of information is required by 37 CFR 1.97 and 1.98. The information is required to obtain or retain a benefit by the public which is to file (and by the USPTO to process) an application. Confidentiality is governed by 35 U.S.C. 122 and 37 CFR 1.14. This collection is estimated to take 1 hour to complete, including gathering, preparing and submitting the completed application form to the USPTO. Time will vary depending upon the individual case. Any comments on the amount of time you require to complete this form and/or suggestions for reducing this burden, should be sent to the Chief Information Officer, U.S. Patent and Trademark Office, U.S. Department of Commerce, P.O. Box 1450, Alexandria, VA 22313-1450. DO NOT SEND FEES OR COMPLETED FORMS TO THIS ADDRESS. **SEND TO: Commissioner for Patents, P.O. Box 1450, Alexandria, VA 22313-1450.**

Privacy Act Statement

The Privacy Act of 1974 (P.L. 93-579) requires that you be given certain information in connection with your submission of the attached form related to a patent application or patent. Accordingly, pursuant to the requirements of the Act, please be advised that: (1) the general authority for the collection of this information is 35 U.S.C. 2(b)(2); (2) furnishing of the information solicited is voluntary; and (3) the principal purpose for which the information is used by the U.S. Patent and Trademark Office is to process and/or examine your submission related to a patent application or patent. If you do not furnish the requested information, the U.S. Patent and Trademark Office may not be able to process and/or examine your submission, which may result in termination of proceedings or abandonment of the application or expiration of the patent.

The information provided by you in this form will be subject to the following routine uses:

1. The information on this form will be treated confidentially to the extent allowed under the Freedom of Information Act (5 U.S.C. 552) and the Privacy Act (5 U.S.C. 552a). Records from this system of records may be disclosed to the Department of Justice to determine whether the Freedom of Information Act requires disclosure of these record s.

2. A record from this system of records may be disclosed, as a routine use, in the course of presenting evidence to a court, magistrate, or administrative tribunal, including disclosures to opposing counsel in the course of settlement negotiations.

3. A record in this system of records may be disclosed, as a routine use, to a Member of Congress submitting a request involving an individual, to whom the record pertains, when the individual has requested assistance from the Member with respect to the subject matter of the record.

4. A record in this system of records may be disclosed, as a routine use, to a contractor of the Agency having need for the information in order to perform a contract. Recipients of information shall be required to comply with the requirements of the Privacy Act of 1974, as amended, pursuant to 5 U.S.C. 552a(m).

5. A record related to an International Application filed under the Patent Cooperation Treaty in this system of records may be disclosed, as a routine use, to the International Bureau of the World Intellectual Property Organization, pursuant to the Patent Cooperation Treaty.

6. A record in this system of records may be disclosed, as a routine use, to another federal agency for purposes of National Security review (35 U.S.C. 181) and for review pursuant to the Atomic Energy Act (42 U.S.C. 218(c)).

7. A record from this system of records may be disclosed, as a routine use, to the Administrator, General Services, or his/her designee, during an inspection of records conducted by GSA as part of that agency's responsibility to recommend improvements in records management practices and programs, under authority of 44 U.S.C. 2904 and 2906. Such disclosure shall be made in accordance with the GSA regulations governing inspection of records for this purpose, and any other relevant (i.e., GSA or Commerce) directive. Such disclosure shall not be used to make determinations about individuals.

8. A record from this system of records may be disclosed, as a routine use, to the public after either publication of the application pursuant to 35 U.S.C. 122(b) or issuance of a patent pursuant to 35 U.S.C. 151. Further, a record may be disclosed, subject to the limitations of 37 CFR 1.14, as a routine use, to the public if the record was filed in an application which became abandoned or in which the proceedings were terminated and which application is referenced by either a published application, an application open to public inspections or an issued patent.

9. A record from this system of records may be disclosed, as a routine use, to a Federal, State, or local law enforcement agency, if the USPTO becomes aware of a violation or potential violation of law or regulation.

Electronic Patent Application Fee Transmittal	
Application Number:	10315250
Filing Date:	10-Dec-2002
Title of Invention:	User interface
First Named Inventor/Applicant Name:	Magnus Goertz
Filer:	Marc Aron Berger
Attorney Docket Number:	NEONODE.P004
Filed as Large Entity	

Utility under 35 USC 111(a) Filing Fees

Description	Fee Code	Quantity	Amount	Sub-Total in USD($)
Basic Filing:				
Pages:				
Claims:				
Miscellaneous-Filing:				
Petition:				
Patent-Appeals-and-Interference:				
Post-Allowance-and-Post-Issuance:				
Extension-of-Time:				

Description	Fee Code	Quantity	Amount	Sub-Total in USD($)
Miscellaneous:				
Submission- Information Disclosure Stmt	1806	1	180	180
		Total in USD ($)		**180**

Electronic Acknowledgement Receipt	
EFS ID:	9089252
Application Number:	10315250
International Application Number:	
Confirmation Number:	1226
Title of Invention:	User interface
First Named Inventor/Applicant Name:	Magnus Goertz
Customer Number:	75660
Filer:	Marc Aron Berger
Filer Authorized By:	
Attorney Docket Number:	NEONODE.P004
Receipt Date:	21-DEC-2010
Filing Date:	10-DEC-2002
Time Stamp:	16:55:29
Application Type:	Utility under 35 USC 111(a)

Payment information:

Submitted with Payment	yes
Payment Type	Credit Card
Payment was successfully received in RAM	$180
RAM confirmation Number	4428
Deposit Account	
Authorized User	

File Listing:

Document Number	Document Description	File Name	File Size(Bytes)/ Message Digest	Multi Part /.zip	Pages (if appl.)

1	Information Disclosure Statement (IDS) Filed (SB/08)	NEONODE_P004_IDS_21-21-2010.pdf	612501 8ef76d2e00ddbb8597c930c2ddbcbb8540ffe87	no	4
Warnings:					
Information:					
2	Fee Worksheet (PTO-875)	fee-info.pdf	29922 49fe21e0e32f592761922206a1e56413a53a5a0b	no	2
Warnings:					
Information:					
			Total Files Size (in bytes):	642423	

This Acknowledgement Receipt evidences receipt on the noted date by the USPTO of the indicated documents, characterized by the applicant, and including page counts, where applicable. It serves as evidence of receipt similar to a Post Card, as described in MPEP 503.

New Applications Under 35 U.S.C. 111
If a new application is being filed and the application includes the necessary components for a filing date (see 37 CFR 1.53(b)-(d) and MPEP 506), a Filing Receipt (37 CFR 1.54) will be issued in due course and the date shown on this Acknowledgement Receipt will establish the filing date of the application.

National Stage of an International Application under 35 U.S.C. 371
If a timely submission to enter the national stage of an international application is compliant with the conditions of 35 U.S.C. 371 and other applicable requirements a Form PCT/DO/EO/903 indicating acceptance of the application as a national stage submission under 35 U.S.C. 371 will be issued in addition to the Filing Receipt, in due course.

New International Application Filed with the USPTO as a Receiving Office
If a new international application is being filed and the international application includes the necessary components for an international filing date (see PCT Article 11 and MPEP 1810), a Notification of the International Application Number and of the International Filing Date (Form PCT/RO/105) will be issued in due course, subject to prescriptions concerning national security, and the date shown on this Acknowledgement Receipt will establish the international filing date of the application.

Doc code: RCEX
Doc description: Request for Continued Examination (RCE)

PTO/SB/30EFS (07-09)
Approved for use through 07/31/2012. OMB 0651-0031
U.S. Patent and Trademark Office; U.S. DEPARTMENT OF COMMERCE
Under the Paperwork Reduction Act of 1995, no persons are required to respond to a collection of information unless it contains a valid OMB control number.

REQUEST FOR CONTINUED EXAMINATION(RCE)TRANSMITTAL
(Submitted Only via EFS-Web)

Application Number	10315250	Filing Date	2002-12-10	Docket Number (if applicable)	NEONODE.P004	Art Unit	2174
First Named Inventor	Magnus Goertz			Examiner Name	Ryan F. Pitaro		

This is a Request for Continued Examination (RCE) under 37 CFR 1.114 of the above-identified application.
Request for Continued Examination (RCE) practice under 37 CFR 1.114 does not apply to any utility or plant application filed prior to June 8, 1995, or to any design application. The Instruction Sheet for this form is located at WWW.USPTO.GOV

SUBMISSION REQUIRED UNDER 37 CFR 1.114

Note: If the RCE is proper, any previously filed unentered amendments and amendments enclosed with the RCE will be entered in the order in which they were filed unless applicant instructs otherwise. If applicant does not wish to have any previously filed unentered amendment(s) entered, applicant must request non-entry of such amendment(s).

☐ Previously submitted. If a final Office action is outstanding, any amendments filed after the final Office action may be considered as a submission even if this box is not checked.

- ☐ Consider the arguments in the Appeal Brief or Reply Brief previously filed on _____
- ☐ Other _____

☒ Enclosed

- ☒ Amendment/Reply
- ☐ Information Disclosure Statement (IDS)
- ☐ Affidavit(s)/ Declaration(s)
- ☐ Other _____

MISCELLANEOUS

☐ Suspension of action on the above-identified application is requested under 37 CFR 1.103(c) for a period of months _____ (Period of suspension shall not exceed 3 months; Fee under 37 CFR 1.17(i) required)

☐ Other _____

FEES

☐ **The RCE fee under 37 CFR 1.17(e) is required by 37 CFR 1.114 when the RCE is filed.**
The Director is hereby authorized to charge any underpayment of fees, or credit any overpayments, to Deposit Account No _____

SIGNATURE OF APPLICANT, ATTORNEY, OR AGENT REQUIRED

☒ Patent Practitioner Signature

☐ Applicant Signature

PTO/SB/30EFS (07-09)
Approved for use through 07/31/2012. OMB 0651-0031
U.S. Patent and Trademark Office; U.S. DEPARTMENT OF COMMERCE
Under the Paperwork Reduction Act of 1995, no persons are required to respond to a collection of information unless it contains a valid OMB control number.

Signature of Registered U.S. Patent Practitioner			
Signature	/Marc A. Berger/	Date (YYYY-MM-DD)	2010-06-30
Name	Marc A. Berger	Registration Number	44029

This collection of information is required by 37 CFR 1.114. The information is required to obtain or retain a benefit by the public which is to file (and by the USPTO to process) an application. Confidentiality is governed by 35 U.S.C. 122 and 37 CFR 1.11 and 1.14. This collection is estimated to take 12 minutes to complete, including gathering, preparing, and submitting the completed application form to the USPTO. Time will vary depending upon the individual case. Any comments on the amount of time you require to complete this form and/or suggestions for reducing this burden, should be sent to the Chief Information Officer, U.S. Patent and Trademark Office, U.S. Department of Commerce, P.O. Box 1450, Alexandria, VA 22313-1450.

If you need assistance in completing the form, call 1-800-PTO-9199 and select option 2.

Privacy Act Statement

The Privacy Act of 1974 (P.L. 93-579) requires that you be given certain information in connection with your submission of the attached form related to a patent application or patent. Accordingly, pursuant to the requirements of the Act, please be advised that: (1) the general authority for the collection of this information is 35 U.S.C. 2(b)(2); (2) furnishing of the information solicited is voluntary; and (3) the principal purpose for which the information is used by the U.S. Patent and Trademark Office is to process and/or examine your submission related to a patent application or patent. If you do not furnish the requested information, the U.S. Patent and Trademark Office may not be able to process and/or examine your submission, which may result in termination of proceedings or abandonment of the application or expiration of the patent.

The information provided by you in this form will be subject to the following routine uses:

1. The information on this form will be treated confidentially to the extent allowed under the Freedom of Information Act (5 U.S.C. 552) and the Privacy Act (5 U.S.C. 552a). Records from this system of records may be disclosed to the Department of Justice to determine whether the Freedom of Information Act requires disclosure of these records.

2. A record from this system of records may be disclosed, as a routine use, in the course of presenting evidence to a court, magistrate, or administrative tribunal, including disclosures to opposing counsel in the course of settlement negotiations.

3. A record in this system of records may be disclosed, as a routine use, to a Member of Congress submitting a request involving an individual, to whom the record pertains, when the individual has requested assistance from the Member with respect to the subject matter of the record.

4. A record in this system of records may be disclosed, as a routine use, to a contractor of the Agency having need for the information in order to perform a contract. Recipients of information shall be required to comply with the requirements of the Privacy Act of 1974, as amended, pursuant to 5 U.S.C. 552a(m).

5. A record related to an International Application filed under the Patent Cooperation Treaty in this system of records may be disclosed, as a routine use, to the International Bureau of the World Intellectual Property Organization, pursuant to the Patent Cooperation Treaty.

6. A record in this system of records may be disclosed, as a routine use, to another federal agency for purposes of National Security review (35 U.S.C. 181) and for review pursuant to the Atomic Energy Act (42 U.S.C. 218(c)).

7. A record from this system of records may be disclosed, as a routine use, to the Administrator, General Services, or his/her designee, during an inspection of records conducted by GSA as part of that agency's responsibility to recommend improvements in records management practices and programs, under authority of 44 U.S.C. 2904 and 2906. Such disclosure shall be made in accordance with the GSA regulations governing inspection of records for this purpose, and any other relevant (i.e., GSA or Commerce) directive. Such disclosure shall not be used to make determinations about individuals.

8. A record from this system of records may be disclosed, as a routine use, to the public after either publication of the application pursuant to 35 U.S.C. 122(b) or issuance of a patent pursuant to 35 U.S.C. 151. Further, a record may be disclosed, subject to the limitations of 37 CFR 1.14, as a routine use, to the public if the record was filed in an application which became abandoned or in which the proceedings were terminated and which application is referenced by either a published application, an application open to public inspections or an issued patent.

9. A record from this system of records may be disclosed, as a routine use, to a Federal, State, or local law enforcement agency, if the USPTO becomes aware of a violation or potential violation of law or regulation.

Attorney's Docket No.: NEONODE.P004 *PATENT*

IN THE UNITED STATES PATENT AND TRADEMARK OFFICE

In Re Patent Application of:	)	
	)	Examiner: Ryan F. Pitaro
Magnus Goertz	)	
	)	Art Unit: 2174
Application No: 10/315,250	)	
	)	
Filed: December 10, 2002	)	
	)	
For: USER INTERFACE FOR MOBILE HANDHELD COMPUTER UNIT	)	
	)	

Mail Stop AMENDMENT
Commissioner for Patents
P. O. Box 1450
Alexandria, VA 22313-1450

AMENDMENT AND RESPONSE TO OFFICE ACTION

UNDER 37 C.F.R. §1.111

Sir:

In response to the Final Office Action dated May 28, 2010, applicant respectfully requests that the above-identified application be amended as follows.

IN THE CLAIMS:

Please substitute the following claims for the pending claims with the same number:

1. (currently amended) A non-transitory computer readable medium storing a computer program with computer program code, which, when read by a mobile handheld computer unit, allows the computer to present a user interface for the mobile handheld computer unit, the user interface comprising:

a touch sensitive area in which ~~representations~~ a representation of ~~at least one~~ a function ~~are displayed, and each function of said at least one function being mapped to a corresponding location in the touch sensitive area at which the representation of the function is displayed, and being~~ is provided, wherein the representation consists of only one option for activating the function and wherein the function is activated by a multi-step operation comprising (i) an object touching the ~~corresponding~~ touch sensitive area at a location where the representation is provided and then (ii) the object gliding along the touch sensitive area away from the touched location.

2. (currently amended) The computer readable medium of claim **1**, wherein ~~one function from~~ the ~~at least one~~ function, when activated, causes the user interface to display icons representing different services or settings for a currently active application.

3. (previously presented) The computer readable medium of claim **2**, wherein the user interface is characterised in, that a selection of a

preferred service or setting is done by tapping on a display icon corresponding to the preferred service or setting.

4. (currently amended) The computer readable medium of claim **1**, wherein ~~one function from at least one~~ the function, when activated, causes the user interface to display a keyboard and a text field.

5. (previously presented) The computer readable medium of claim **4**, wherein said text field is used for inputting and editing of text through said keyboard.

6. (currently amended) The computer readable medium of claim **1**, wherein ~~one function from~~ the ~~at least one~~ function, when activated, causes the user interface to display a list with a library of available applications and files on the mobile handheld computer unit.

7. (previously presented) The computer readable medium of claim **6**, wherein the user interface is characterised in, that a selection of an application or file is done by gliding the object along said touch sensitive area so that a representation of a desired one of said application or file is highlighted, raising said object from said touch sensitive area, and then tapping on said touch sensitive area.

8. (previously presented) The computer readable medium of claim **7**, wherein the user interface is characterised in, that at any given time said list presents only files or only applications, and that an area of said list presents a field through which said list can be changed from presenting

files to presenting applications, or from presenting applications to presenting files.

9. (previously presented) The computer readable medium of claim **7**, wherein the user interface is characterised in, that, one item in said list is highlighted by a moveable marking, and the user interface enables list navigation whereby gliding the object along the touch sensitive area in a direction towards the top of said list or towards the bottom of said list causes said marking to move in the same direction without scrolling the list.

10. (previously presented) The computer readable medium of claim **9**, wherein the user interface is characterised in, that, if the number of applications or files in said list exceeds the number of applications or files that can be presented on said touch sensitive area as content, and if the object is (i) glided along said touch sensitive area to the top or bottom of said touch sensitive area, then (ii) raised above said touch sensitive area, then (iii) replaced on said touch sensitive area, and then (iv) again glided along said touch sensitive area to the top or bottom of said touch sensitive area, said list navigation pages the content of said list up or down by one whole page.

11. (previously presented) The computer readable medium of claim **10**, wherein the user interface is characterised in, that if the object is raised from any first position on said touch sensitive area and then replaced on any second position on said touch sensitive area, said list navigation can be continued from said second position.

12. (previously presented) The computer readable medium of claim **1**, wherein the user interface is characterised in, that an active application, function, service or setting is advanced one step by gliding the object along the touch sensitive area from left to right, and that the active application, function, service or setting is closed or backed one step by gliding the object along the touch sensitive area from right to left.

13. (currently amended) The computer readable medium of claim **1**, wherein the user interface is characterised in, that said ~~representations~~ representation of said ~~at least one~~ function [[are]] is located at the bottom of said touch sensitive area.

14. (previously presented) The computer readable medium of claim **1**, wherein the touch sensitive area is 2-3 inches in diagonal dimension.

15. (previously presented) An enclosure adapted to cover the mobile handheld computer unit according to Claim **1**, characterised in, that said enclosure is provided with an opening for said touch sensitive area.

16. (previously presented) The enclosure according to Claim **15**, characterised in, that said enclosure is removable and exchangeable.

17. (cancelled)

18. (previously presented) The computer readable medium of claim **1**, characterised in, that said computer program code is adapted to function as a shell upon an operating system.

19. – **47.** (cancelled)

Please add the following new claims.

48. (new) The computer readable medium of claim **1**, wherein the representation is finger-sized.

49. (new) The computer readable medium of claim **1**, wherein the location where the representation is provided does not provide touch functionality for a different function.

REMARKS

Applicant has carefully studied the outstanding Office Action. The present amendment is intended to place the application in condition for allowance and is believed to overcome all of the objections and rejections made by the Examiner. Favorable reconsideration and allowance of the application are respectfully requested.

Applicant has amended claim **1**, **2**, **4**, **6** and **13** and added new claims **48** and **49** to properly claim the present invention. No new matter has been introduced. Support for the new and amended claims is provided hereinbelow. Claims **1** – **16**, **18**, **48** and **49** are presented for examination.

In Paragraphs 2 and 3 of the Office Action, the Examiner has rejected claim **1** under 35 U.S.C. §103(a) as being unpatentable over Nakajima et al., U.S. Patent No. 6,346,935 ("Nakajima") in view of Hoshino et al., U.S. Publ. No. 2004/0021643 ("Hoshino") in view of Hirshberg, U.S. Publ. No. 2002/0027549 ("Hirshberg").

In Paragraph 4 of the Office Action, the Examiner has rejected claims **2** – **11**, **14** – **16** and **18** under 35 U.S.C. §103(a) as being unpatentable over Nakajima and Hoshino in view of Hirshberg in view of Pogue, Palm Pilot: The Ultimate Guide, 2nd Edition ("Pogue").

In Paragraph 5 of the Office Action, the Examiner has rejected claims **12** and **13** under 35 U.S.C. §103(a) as being unpatentable over Nakajima in view of Pogue, in view of Hoshino, in view of Hirshberg, in view of O'Rourke, US Patent No. 7,225,408 ("O'Rourke").

Brief Discussion of Prior Art

Nakajima, Rogue and O'Rourke are discussed in applicant's response filed on July 13, 2009. Hoshino is discussed in applicant's response filed on February 22, 2010.

Hirshberg describes a touch screen user interface for a compact multi-functional keypad that is operated using a finger. Hirshberg addresses the problem of how to provide the 40 – 60 different keys required for a full alphanumeric keypad on a small surface that cannot reasonably accommodate so many keys (Hirschberg/ par. [0050]). Hirshberg describes grouping several characters (typically 4 – 6 characters) in a single key. As such, the number of required keys is reduced, and can fit in the available display area on a handheld device (Hirshberg/ par. [0051]).

To enter a character, a user first touches a key representing several characters, and then drags his finger in a specific direction to select one of the several characters. Thus, at par. [0055], Hirshberg recites:

> In multi-function key [sic] the first touch on the key activate [sic] the key and the relative trace … is selecting the appropriate function among the functions associated with the selected key.

Response to Examiner's Arguments

In rejecting independent claim **1** in Paragraph 3 of the Office Action, the Examiner has cited par. [0031] of Hirshberg as teaching a multi-step operation comprising an object touching a corresponding location and then the object gliding along the touch sensitive area away from the touched location.

Applicant respectfully submits that Hirshberg teaches a touch and glide operation only for keys that comprise several characters.

On the contrary, for single character keys Hirshberg teaches using a conventional touch operation without a glide (Hirshberg/ pars. [0055] and [0074]). Thus, at par. [0055], Hirshberg recites:

> In the case of one function a regular touch operation activate [sic] the function.

Further, at par. [0074], Hirshberg recites:

> … a single-function mode wherein a single function is elected on contact with a given key, independent of the direction of motion.

In distinction, the claimed invention uses a multi-step touch-and-glide operation for representations that consist of only one option for activating a function.

In order to further distinguish the claimed invention over Hirshberg, applicant has amended claim **1** to include the limitation that the representation of the function consists of only one option for activating the function.

The rejections of the claims **1** – **16** and **18** in paragraphs 2 - 5 of the Office Action will now be dealt with specifically.

As to amended independent claim **1** for a computer readable medium, applicant respectfully submits, as indicated hereinabove, that the limitation in claim **1** of

"*wherein the representation* ***consists of only one option for activating the function*** *and wherein the function is activated by* ***a multi-step operation*** *comprising (i) an object* ***touching*** *the touch sensitive area at a location where the representation is provided and then (ii) the object* ***gliding along the touch sensitive area away from the touched location***"

is neither shown nor suggested in Nakajima, Hoshino, Hirshberg, Pogue or O'Rourke.

Because claims **2** – **16**, **18**, **48** and **49** depend from claim **1** and include additional features, applicant respectfully submits that claims **2** – **16**, **18**, **48** and **49** are not anticipated or rendered obvious by Nakajima, Hoshino, Hirshberg, Pogue, O'Rourke, or a combination of Nakajima, Hoshino, Hirshberg, Pogue and O'Rourke.

Accordingly claims **1**, **2** – **16**, **18**, **48** and **49** are deemed to be allowable.

Support for New and Amended Claims in Original Specification

Independent claim **1** for a computer readable medium has been amended to include the limitation of a representation consisting of only one option for activating a function. This limitation is supported in the original specification at least by the Abstract, by representations 21 – 23 of FIG. 1, by FIG. 2 and its description at pars. [0045] – [0047] and by par. [0068].

Applicant notes that each representation 21 – 23, shown in FIG. 1 of the original specification, consists of only one option for activating its corresponding function. Indeed, element 21 consists of the one option of displaying icons as appropriate for a currently active application, as described at par. [0048] and shown in FIG. 3 of the original specification. Element 22 consists of the one option of opening a keypad and text window, as described at par. [0052] and shown in FIG. 5 of the original specification. Element 23 consists of the one option of opening a list of computer system applications and files, as described at par. [0058] and shown in FIG. 6 of the original specification. Moreover, each of these one-option elements is activated by a multi-step touch-and-glide operation, as described at pars. [0016] and [0047] of the original specification.

New dependent claim **48** includes the limitation that the representation of the function is finger-sized. This limitation is supported in the original specification at least at par. [0047] and FIG. 2, which shows that a representation 21, 22 or 23 is activated by a user's thumb; and at FIG. 5, which shows that representations 21, 22 and 23 are approximately the same size as the numeral keys of keyboard 221.

New dependent claim **49** includes the limitation that the location where the representation is provided does not provide touch functionality for a different function. This limitation is supported in the original specification at least at FIG. 1, which shows that the locations of the representations 21, 22, 23 are non-overlapping.

For the foregoing reasons, applicant respectfully submits that the applicable objections and rejections have been overcome and that the claims are in condition for allowance.

If any matters can be resolved by telephone, applicant requests that the Patent and Trademark Office please contact the applicant at the telephone number listed below.

Respectfully submitted,

Dated: June 30, 2010

/Marc A. Berger/
Marc A. Berger
Reg. No. 44,029

P.O. Box 691
Soquel, CA 95073
(831) 426-8200

Electronic Patent Application Fee Transmittal	
Application Number:	10315250
Filing Date:	10-Dec-2002
Title of Invention:	User interface
First Named Inventor/Applicant Name:	Magnus Goertz
Filer:	Marc Aron Berger
Attorney Docket Number:	NEONODE.P004
Filed as Large Entity	

Utility under 35 USC 111(a) Filing Fees

Description	Fee Code	Quantity	Amount	Sub-Total in USD($)
Basic Filing:				
Pages:				
Claims:				
Miscellaneous-Filing:				
Petition:				
Patent-Appeals-and-Interference:				
Post-Allowance-and-Post-Issuance:				
Extension-of-Time:				

Description	Fee Code	Quantity	Amount	Sub-Total in USD($)
Miscellaneous:				
Request for continued examination	1801	1	810	810
		Total in USD ($)		**810**

Electronic Acknowledgement Receipt	
EFS ID:	7922718
Application Number:	10315250
International Application Number:	
Confirmation Number:	1226
Title of Invention:	User interface
First Named Inventor/Applicant Name:	Magnus Goertz
Customer Number:	75660
Filer:	Marc Aron Berger
Filer Authorized By:	
Attorney Docket Number:	NEONODE.P004
Receipt Date:	30-JUN-2010
Filing Date:	10-DEC-2002
Time Stamp:	10:48:58
Application Type:	Utility under 35 USC 111(a)

Payment information:

Submitted with Payment	yes
Payment Type	Credit Card
Payment was successfully received in RAM	$810
RAM confirmation Number	20811
Deposit Account	
Authorized User	

File Listing:

Document Number	Document Description	File Name	File Size(Bytes)/ Message Digest	Multi Part /.zip	Pages (if appl.)

1	Request for Continued Examination (RCE)	NEONODEP004RCE_06-30-2010.pdf	767940 a8f96a89a04f24517d988b5bd4362e13368cf08c	no	3
Warnings:					
Information:					
2		NEONODEP004Amendment_06-30-2010.pdf	84752 2e7240a4650f4127041d01fdad89d9af9ffdc513	yes	11

	Multipart Description/PDF files in .zip description		
	Document Description	**Start**	**End**
	Amendment/Req. Reconsideration-After Non-Final Reject	1	1
	Claims	2	6
	Applicant Arguments/Remarks Made in an Amendment	7	11

Warnings:					
Information:					
3	Fee Worksheet (PTO-875)	fee-info.pdf	29863 1385dd50828cd3accc63ccea08dfc0e4899ce2e6	no	2
Warnings:					
Information:					
		Total Files Size (in bytes):	882555		

This Acknowledgement Receipt evidences receipt on the noted date by the USPTO of the indicated documents, characterized by the applicant, and including page counts, where applicable. It serves as evidence of receipt similar to a Post Card, as described in MPEP 503.

<u>New Applications Under 35 U.S.C. 111</u>
If a new application is being filed and the application includes the necessary components for a filing date (see 37 CFR 1.53(b)-(d) and MPEP 506), a Filing Receipt (37 CFR 1.54) will be issued in due course and the date shown on this Acknowledgement Receipt will establish the filing date of the application.

<u>National Stage of an International Application under 35 U.S.C. 371</u>
If a timely submission to enter the national stage of an international application is compliant with the conditions of 35 U.S.C. 371 and other applicable requirements a Form PCT/DO/EO/903 indicating acceptance of the application as a national stage submission under 35 U.S.C. 371 will be issued in addition to the Filing Receipt, in due course.

<u>New International Application Filed with the USPTO as a Receiving Office</u>
If a new international application is being filed and the international application includes the necessary components for an international filing date (see PCT Article 11 and MPEP 1810), a Notification of the International Application Number and of the International Filing Date (Form PCT/RO/105) will be issued in due course, subject to prescriptions concerning national security, and the date shown on this Acknowledgement Receipt will establish the international filing date of the application.

PTO/SB/06 (07-06)
Approved for use through 1/31/2007. OMB 0651-0032
U.S. Patent and Trademark Office; U.S. DEPARTMENT OF COMMERCE
Under the Paperwork Reduction Act of 1995, no persons are required to respond to a collection of information unless it displays a valid OMB control number.

PATENT APPLICATION FEE DETERMINATION RECORD Substitute for Form PTO-875	Application or Docket Number 10/315,250	Filing Date 12/10/2002	☐ To be Mailed

APPLICATION AS FILED – PART I

	(Column 1)	(Column 2)	SMALL ENTITY ☒		OR	OTHER THAN SMALL ENTITY	
FOR	NUMBER FILED	NUMBER EXTRA	RATE ($)	FEE ($)		RATE ($)	FEE ($)
☐ BASIC FEE (37 CFR 1.16(a), (b), or (c))	N/A	N/A	N/A			N/A	
☐ SEARCH FEE (37 CFR 1.16(k), (i), or (m))	N/A	N/A	N/A			N/A	
☐ EXAMINATION FEE (37 CFR 1.16(o), (p), or (q))	N/A	N/A	N/A			N/A	
TOTAL CLAIMS (37 CFR 1.16(i))	minus 20 =	*	X $ =		OR	X $ =	
INDEPENDENT CLAIMS (37 CFR 1.16(h))	minus 3 =	*	X $ =			X $ =	
☐ APPLICATION SIZE FEE (37 CFR 1.16(s))	If the specification and drawings exceed 100 sheets of paper, the application size fee due is $250 ($125 for small entity) for each additional 50 sheets or fraction thereof. See 35 U.S.C. 41(a)(1)(G) and 37 CFR 1.16(s).						
☐ MULTIPLE DEPENDENT CLAIM PRESENT (37 CFR 1.16(j))							
* If the difference in column 1 is less than zero, enter "0" in column 2.			TOTAL			TOTAL	

APPLICATION AS AMENDED – PART II

AMENDMENT	06/30/2010	(Column 1) CLAIMS REMAINING AFTER AMENDMENT		(Column 2) HIGHEST NUMBER PREVIOUSLY PAID FOR	(Column 3) PRESENT EXTRA	SMALL ENTITY RATE ($)	ADDITIONAL FEE ($)	OR	OTHER THAN SMALL ENTITY RATE ($)	ADDITIONAL FEE ($)
	Total (37 CFR 1.16(i))	* 19	Minus	** 47	= 0	X $26 =	0	OR	X $ =	
	Independent (37 CFR 1.16(h))	* 1	Minus	***8	= 0	X $110 =	0	OR	X $ =	
	☐ Application Size Fee (37 CFR 1.16(s))									
	☐ FIRST PRESENTATION OF MULTIPLE DEPENDENT CLAIM (37 CFR 1.16(j))							OR		
						TOTAL ADD'L FEE	0	OR	TOTAL ADD'L FEE	

AMENDMENT		(Column 1) CLAIMS REMAINING AFTER AMENDMENT		(Column 2) HIGHEST NUMBER PREVIOUSLY PAID FOR	(Column 3) PRESENT EXTRA	RATE ($)	ADDITIONAL FEE ($)		RATE ($)	ADDITIONAL FEE ($)
	Total (37 CFR 1.16(i))	*	Minus	**	=	X $ =		OR	X $ =	
	Independent (37 CFR 1.16(h))	*	Minus	***	=	X $ =		OR	X $ =	
	☐ Application Size Fee (37 CFR 1.16(s))									
	☐ FIRST PRESENTATION OF MULTIPLE DEPENDENT CLAIM (37 CFR 1.16(j))							OR		
						TOTAL ADD'L FEE		OR	TOTAL ADD'L FEE	

* If the entry in column 1 is less than the entry in column 2, write "0" in column 3.

** If the "Highest Number Previously Paid For" IN THIS SPACE is less than 20, enter "20".

*** If the "Highest Number Previously Paid For" IN THIS SPACE is less than 3, enter "3".

The "Highest Number Previously Paid For" (Total or Independent) is the highest number found in the appropriate box in column 1.

Legal Instrument Examiner:
/EFREM WARREN/

This collection of information is required by 37 CFR 1.16. The information is required to obtain or retain a benefit by the public which is to file (and by the USPTO to process) an application. Confidentiality is governed by 35 U.S.C. 122 and 37 CFR 1.14. This collection is estimated to take 12 minutes to complete, including gathering, preparing, and submitting the completed application form to the USPTO. Time will vary depending upon the individual case. Any comments on the amount of time you require to complete this form and/or suggestions for reducing this burden, should be sent to the Chief Information Officer, U.S. Patent and Trademark Office, U.S. Department of Commerce, P.O. Box 1450, Alexandria, VA 22313-1450. DO NOT SEND FEES OR COMPLETED FORMS TO THIS ADDRESS. **SEND TO: Commissioner for Patents, P.O. Box 1450, Alexandria, VA 22313-1450.**

If you need assistance in completing the form, call 1-800-PTO-9199 and select option 2.

UNITED STATES PATENT AND TRADEMARK OFFICE

UNITED STATES DEPARTMENT OF COMMERCE
United States Patent and Trademark Office
Address: COMMISSIONER FOR PATENTS
P.O. Box 1450
Alexandria, Virginia 22313-1450
www.uspto.gov

APPLICATION NO.	FILING DATE	FIRST NAMED INVENTOR	ATTORNEY DOCKET NO.	CONFIRMATION NO.
10/315,250	12/10/2002	Magnus Goertz	NEONODE.P004	1226

75660 7590 05/28/2010

Soquel Group, LLC
P.O. Box 691
Soquel, CA 95073

EXAMINER	
PITARO, RYAN F	
ART UNIT	PAPER NUMBER
2174	

MAIL DATE	DELIVERY MODE
05/28/2010	PAPER

Please find below and/or attached an Office communication concerning this application or proceeding.

The time period for reply, if any, is set in the attached communication.

Office Action Summary	Application No.	Applicant(s)	
	10/315,250	GOERTZ, MAGNUS	
	Examiner	Art Unit	
	RYAN F. PITARO	2174	

-- The MAILING DATE of this communication appears on the cover sheet with the correspondence address --

Period for Reply

A SHORTENED STATUTORY PERIOD FOR REPLY IS SET TO EXPIRE 3 MONTH(S) OR THIRTY (30) DAYS, WHICHEVER IS LONGER, FROM THE MAILING DATE OF THIS COMMUNICATION.

- Extensions of time may be available under the provisions of 37 CFR 1.136(a). In no event, however, may a reply be timely filed after SIX (6) MONTHS from the mailing date of this communication.
- If NO period for reply is specified above, the maximum statutory period will apply and will expire SIX (6) MONTHS from the mailing date of this communication.
- Failure to reply within the set or extended period for reply will, by statute, cause the application to become ABANDONED (35 U.S.C. § 133). Any reply received by the Office later than three months after the mailing date of this communication, even if timely filed, may reduce any earned patent term adjustment. See 37 CFR 1.704(b).

Status

1)☒ Responsive to communication(s) filed on *22 February 2010*.

2a)☒ This action is **FINAL**. 2b)☐ This action is non-final.

3)☐ Since this application is in condition for allowance except for formal matters, prosecution as to the merits is closed in accordance with the practice under *Ex parte Quayle*, 1935 C.D. 11, 453 O.G. 213.

Disposition of Claims

4)☒ Claim(s) *1-16 and 18* is/are pending in the application.

4a) Of the above claim(s) _____ is/are withdrawn from consideration.

5)☐ Claim(s) _____ is/are allowed.

6)☒ Claim(s) *1-16 and 18* is/are rejected.

7)☐ Claim(s) _____ is/are objected to.

8)☐ Claim(s) _____ are subject to restriction and/or election requirement.

Application Papers

9)☐ The specification is objected to by the Examiner.

10)☐ The drawing(s) filed on _____ is/are: a)☐ accepted or b)☐ objected to by the Examiner.

Applicant may not request that any objection to the drawing(s) be held in abeyance. See 37 CFR 1.85(a).

Replacement drawing sheet(s) including the correction is required if the drawing(s) is objected to. See 37 CFR 1.121(d).

11)☐ The oath or declaration is objected to by the Examiner. Note the attached Office Action or form PTO-152.

Priority under 35 U.S.C. § 119

12)☐ Acknowledgment is made of a claim for foreign priority under 35 U.S.C. § 119(a)-(d) or (f).

a)☐ All b)☐ Some * c)☐ None of:

1.☐ Certified copies of the priority documents have been received.

2.☐ Certified copies of the priority documents have been received in Application No. _____.

3.☐ Copies of the certified copies of the priority documents have been received in this National Stage application from the International Bureau (PCT Rule 17.2(a)).

* See the attached detailed Office action for a list of the certified copies not received.

Attachment(s)

1) ☒ Notice of References Cited (PTO-892)
2) ☐ Notice of Draftsperson's Patent Drawing Review (PTO-948)
3) ☒ Information Disclosure Statement(s) (PTO/SB/08) Paper No(s)/Mail Date *3/16/2010*.
4) ☐ Interview Summary (PTO-413) Paper No(s)/Mail Date. _____ .
5) ☐ Notice of Informal Patent Application
6) ☐ Other: _____.

Response to Amendment

1. This action is in response to the amendment filed 2/22/2010. This action is final.

Claim Rejections - 35 USC § 103

2. The following is a quotation of 35 U.S.C. 103(a) which forms the basis for all obviousness rejections set forth in this Office action:

> (a) A patent may not be obtained though the invention is not identically disclosed or described as set forth in section 102 of this title, if the differences between the subject matter sought to be patented and the prior art are such that the subject matter as a whole would have been obvious at the time the invention was made to a person having ordinary skill in the art to which said subject matter pertains. Patentability shall not be negatived by the manner in which the invention was made.

3. Claim 1 is rejected under 35 U.S.C. 103(a) as being unpatentable over Nakajima et al ("Nakajima", 6,346,935) in view of Hoshino et al ("Hoshino", US 20040021643) in view of Hirshberg ("Hirshberg", US 2002/0027549).

As per claim 1, Nakajima teaches a computer readable medium storing a computer program with computer program code, which, when read by a mobile handheld computer unit, allows the computer to present a user interface for the mobile handheld computer unit, the user interface comprising: a touch sensitive area in which representations of a plurality of functions are displayed (Column 15 lines 1-9, *function signs*), and each function of said plurality of functions being mapped to a corresponding location in the touch sensitive area at which the representation of the function is displayed (Column 15 lines 1-9, *stops moving finger*). Nakajima teaches gliding over the

icon Column 15 lines 1-15, *stops moving finger then glides finger to lightly press surface* but fails to distinctly point out touching the icon and gliding away. However, Hoshino teaches an icon being activated by an object touching the corresponding location and then gliding along the touch sensitive area away from the location ([0092]-[0093], drag and drop operation may be used in combination with a push in operation for activating a function). Therefore it would have been obvious at the time of the invention to combine the teaching of Hoshino with the medium of Nakajima. Motivation to do so would have been to apply a known technique to a known system in order to yield advantageous and predictable results.

Nakajima-Hoshino fails to distinctly point out an object touching a location then the object gliding along the area away from the location to activate a function. However, Hirshberg teaches a multi-step operation comprising an object touching the corresponding location and then the object gliding along the touch sensitive area away from the touched location ([0031]).

Therefore it would have been obvious to an artisan at the time of the invention to combine the teaching of Hirshberg with the medium of Nakajima-Hoshino.

Motivation to do so would have been to provide a compact multifunctional keypad which would not require great precision of use and which could be conveniently and effectively operated by use of the finger.

4. Claims 2-11,14-16,18 rejected under 35 U.S.C. 103(a) as being unpatentable over Nakajima et al ("Nakajima", 6,346,935) and Hoshino et al ("Hoshino", US 20040021643) in view of Hirshberg ("Hirshberg", US 2002/0027549) in view of Rogue ("Rogue", Palm Pilot: The Ultimate Guide, 2nd Edition).

As per claim 2, Nakajima-Hoshino-Hirshberg fails to particularly disclose a function to display a plurality of functions. However, Rogue teaches a computer readable medium of claim 1, wherein one function from the plurality of functions, when activated, causes the user interface to display icons representing different services or settings for a currently active application (Figure 1.2-1.3, *Preferences*).Therefore it would have been obvious to an artisan at the time of the invention to combine the teaching of Rogue with the medium of Nakajima. Motivation to do so would have been to provide a way to reduce screen clutter and only access the applications when needed.

As per claim 3, Nakajima-Hoshino-Hirshberg-Rogue teaches a computer readable medium of claim 2, wherein the user interface is characterised in, that a selection of a preferred service or setting is done by tapping on a display icon corresponding to the preferred service or setting (Nakajima, Column 18 lines 30-40, tap).

As per claim 4, Nakajima-Hoshino-Hirshberg-Rogue teaches a computer readable medium of claim 1, wherein one function from the plurality of functions, when activated, causes the user interface to display a keyboard and a text field (Rogue, Figure 2.5, power stroke up, Figure 2.6).

As per claim 5, Nakajima-Hoshino-Hirshberg-Rogue teaches a wherein said text field is used for inputting and editing of text through said keyboard (Nakajima, Figure 2.6).

As per claim 6, Nakajima-Hoshino-Hirshberg-Rogue fails to teach a computer readable medium of claim 1, OFFICIAL NOTICE is taken that file listing is well know in the art. It is extremely common to see a list of functions and files listed, as in directories. Therefore it would have been obvious to an artisan at the time of the invention to combine the teaching with the medium of Nakajima-Hoshino -Rogue. Motivation to do so would have been to provide a user with a list of options.

As per claim 7, Nakajima-Hoshino-Hirshberg-Rogue teaches a computer readable medium of claim 6, wherein the user interface is characterised in, that a selection of an application or file is done by gliding the object along said touch sensitive area so that a representation of a desired one of said application or file is highlighted,

raising said object from said touch sensitive area, and then tapping on said touch sensitive area (Nakajima, Column 18 lines 40-56).

As per claim 8, Nakajima-Hoshino-Hirshberg-Rogue fails to teach presenting only files or only applications. However OFFICIAL NOTICE is taken that file sorting is well know in the art. It is extremely common to sort a list of functions and files listed by data type. Therefore it would have been obvious to an artisan at the time of the invention to combine the teaching with the medium of Nakajima-Rogue. Motivation to do so would have been to provide a user with a specific list of filtered options.

As per claim 9, Nakajima-Hoshino-Hirshberg-Rogue teaches a computer readable medium of claim 7, wherein the user interface is characterised in, that, one item in said list is highlighted by a moveable marking, and gliding the object along the touch sensitive area in a direction towards the top of said list or towards the bottom of said list, causes said marking to move in the same direction without scrolling the list (Rogue, Figure 1.4, using the menu).

As per claim 10, Nakajima-Hoshino-Hirshberg-Rogue teaches a computer readable medium of claim 9, wherein the user interface is characterised in, that, if the number of applications or files in said list exceeds the number of applications or files that can be presented on said touch sensitive area as content, and if the object is (i) glided along said touch sensitive area to the top or bottom position of said touch

sensitive area, then (ii) raised above said touch sensitive area, then (iii) replaced on said touch sensitive area, and then (iv) again glided along said touch sensitive area to the top or bottom of said touch sensitive area, said list navigation pages the content of said list up or down one whole page (Nakajima, Column 14 lines 45-57 and Column 2 lines 15-23, wherein Nakajima is an absolute pointing device and a swipe from the top of the page to the bottom will result in a refresh by a whole page).

As per claim 11, Nakajima-Hoshino-Hirshberg-Rogue teaches a computer readable medium of claim 10, wherein the user interface is characterised in, that if the object is raised from any first position on said touch sensitive area and then replaced on any second position on said touch sensitive area, said navigation can be continued from said second position (Nakajima, Column 14 lines 45-57).

As per claim 14, while Nakajima-Hoshino-Hirshberg-Rogue fails to teach a touch sensitive area is 2-3 inches. OFFICIAL NOTICE is taken that screen sizes vary and screens with a touch sensitive area of 2-3 inches diagonally is well known in the art. Therefore it would have been obvious to an artisan at the time of the invention to combine the screen size with the medium of Nakajima-Hoshino -Rogue. Motivation to do so would have been to provide adequate size to operate the touch screen while keeping it small enough to fit in a pocket.

As per claim 15, Nakajima-Hoshino-Hirshberg-Rogue teaches a enclosure adapted to cover the mobile handheld computer unit according to Claim 1, characterised in, that said enclosure is provided with an opening for said touch sensitive area (Rogue, Figure 1.1).

As per claim 16, Nakajima-Hoshino-Hirshberg-Rogue fails to teach an enclosure is removable and exchangeable. OFFICIAL NOTICE is taken that an enclosure is removable and exchangeable is well known in the art. Therefore it would have been obvious to an artisan at the time of the invention to combine the exchangeable enclosure with the medium of Nakajima-Rogue. Motivation to do so would have been to provide a way to style your mobile device so that it can be personalized to a user's taste.

As per claim 18, Nakajima-Hoshino-Hirshberg-Rogue teaches a computer readable medium according to Claim 1, characterised in, that said computer program product is adapted to function as a shell upon an operations system (Rogue, 1.1 Palm Pilot Basics).

5. Claims 12 and 13 are rejected under 35 U.S.C. 103(a) as being unpatentable over Nakajima et al ("Nakajima", 6,346,935) in view of Rogue ("Rogue", Palm Pilot: The Ultimate Guide, 2nd Edition), Hoshino et al ("Hoshino", US 20040021643) and Hirshberg ("Hirshberg", US 2002/0027549) in view of O'Rourke (O'Rourke, US 7,225,408).

As per claim 12, Nakajima-Hoshino-Hirshberg-Rogue teaches a computer readable medium of claim 1, wherein the user interface is characterized in, that an active application, function, service or setting is moved on one step by gliding the object along the touch sensitive area from left to right (Nakajima, Column 14 lines 45-57). However, Nakajima-Hoshino-Hirshberg-Rogue t fails to distinctly point out closing or backing one step. However, O'Rourke teaches that the active application, function, service or setting is closed or backed one step (Figure 13, right and left arrows). Therefore it would have been obvious to an artisan at the time of the invention to combine the glide functionality with the forward and backward functionality of O'Rourke. Motivation to do so would have been to provide an easy way to traverse the GUI.

As per claim 13, Nakajima-Hoshino-Hirshberg-Rogue t-O'Rourke teaches a computer readable medium of claim 1, wherein the user interface is characterized in, that said representations of said plurality of functions are located at the bottom of said touch sensitive area (O'Rourke, Figure 13, icons at bottom right) .

Response to Arguments

Applicant's arguments with respect to claims 1-16,18 have been considered but are moot in view of the new ground(s) of rejection.

The Examiner notes that the factual assertions set forth under OFFICIAL NOTICE in the previous office action have not been contested.

Conclusion

Applicant's amendment necessitated the new ground(s) of rejection presented in this Office action. Accordingly, **THIS ACTION IS MADE FINAL**. See MPEP § 706.07(a). Applicant is reminded of the extension of time policy as set forth in 37 CFR 1.136(a).

A shortened statutory period for reply to this final action is set to expire THREE MONTHS from the mailing date of this action. In the event a first reply is filed within TWO MONTHS of the mailing date of this final action and the advisory action is not mailed until after the end of the THREE-MONTH shortened statutory period, then the shortened statutory period will expire on the date the advisory action is mailed, and any extension fee pursuant to 37 CFR 1.136(a) will be calculated from the mailing date of the advisory action. In no event, however, will the statutory period for reply expire later than SIX MONTHS from the date of this final action.

Any inquiry concerning this communication or earlier communications from the examiner should be directed to RYAN F. PITARO whose telephone number is (571)272-4071. The examiner can normally be reached on 9:00am - 5:30pm Mondays through Fridays.

If attempts to reach the examiner by telephone are unsuccessful, the examiner's supervisor, Dennis Chow can be reached on 571-272-7767. The fax phone number for the organization where this application or proceeding is assigned is 571-273-8300.

Information regarding the status of an application may be obtained from the Patent Application Information Retrieval (PAIR) system. Status information for published applications may be obtained from either Private PAIR or Public PAIR. Status information for unpublished applications is available through Private PAIR only. For more information about the PAIR system, see http://pair-direct.uspto.gov. Should you have questions on access to the Private PAIR system, contact the Electronic Business Center (EBC) at 866-217-9197 (toll-free). If you would like assistance from a USPTO Customer Service Representative or access to the automated information system, call 800-786-9199 (IN USA OR CANADA) or 571-272-1000.

/Ryan F Pitaro/
Examiner, Art Unit 2174

Notice of References Cited	Application/Control No. 10/315,250	Applicant(s)/Patent Under Reexamination GOERTZ, MAGNUS	
	Examiner RYAN F. PITARO	Art Unit 2174	Page 1 of 1

U.S. PATENT DOCUMENTS

*		Document Number Country Code-Number-Kind Code	Date MM-YYYY	Name	Classification
*	A	US-2002/0027549	03-2002	Hirshberg, David	345/168
*	B	US-7,159,763	01-2007	Yap et al.	235/375
*	C	US-7,006,077	02-2006	Uusimaki, Matti	345/173
*	D	US-6,597,345	07-2003	Hirshberg, David	345/168
	E	US-			
	F	US-			
	G	US-			
	H	US-			
	I	US-			
	J	US-			
	K	US-			
	L	US-			
	M	US-			

FOREIGN PATENT DOCUMENTS

*		Document Number Country Code-Number-Kind Code	Date MM-YYYY	Country	Name	Classification
	N					
	O					
	P					
	Q					
	R					
	S					
	T					

NON-PATENT DOCUMENTS

*		Include as applicable: Author, Title Date, Publisher, Edition or Volume, Pertinent Pages)
	U	
	V	
	W	
	X	

*A copy of this reference is not being furnished with this Office action. (See MPEP § 707.05(a).)
Dates in MM-YYYY format are publication dates. Classifications may be US or foreign.

Index of Claims	Application/Control No.	Applicant(s)/Patent Under Reexamination
	10315250	GOERTZ, MAGNUS
	Examiner	Art Unit
	Ryan F Pitaro	2174

✓	Rejected	-	Cancelled	N	Non-Elected	A	Appeal
=	Allowed	÷	Restricted	I	Interference	O	Objected

☐ Claims renumbered in the same order as presented by applicant ☐ CPA ☐ T.D. ☐ R.1.47

CLAIM		DATE								
Final	Original	11/09/2007	06/23/2008	12/21/2008	07/06/2009	11/20/2009	05/23/2010			
	1	✓	✓	✓	✓	✓	✓			
	2	✓	✓	✓	✓	✓	✓			
	3	✓	✓	✓	✓	✓	✓			
	4	✓	✓	✓	✓	✓	✓			
	5	✓	✓	✓	✓	✓	✓			
	6	✓	✓	✓	✓	✓	✓			
	7	✓	✓	✓	✓	✓	✓			
	8	✓	✓	✓	✓	✓	✓			
	9	✓	✓	✓	✓	✓	✓			
	10	✓	✓	✓	✓	✓	✓			
	11	✓	✓	✓	✓	✓	✓			
	12	✓	✓	✓	✓	✓	✓			
	13	✓	✓	✓	✓	✓	✓			
	14	✓	✓	✓	✓	✓	✓			
	15	✓	✓	✓	✓	✓	✓			
	16	✓	✓	✓	✓	✓	✓			
	17	✓	✓	✓	-	-	-			
	18	✓	✓	✓	✓	✓	✓			
	19		÷	N	-					
	20		÷	N	-					
	21		÷	N	-					
	22		÷	N	-					
	23		÷	N	-					
	24		÷	N	-					
	25		÷	N	-					
	26		÷	N	-					
	27		÷	N	-					
	28		÷	N	-					
	29		÷	N	-					
	30		÷	N	-					
	31		÷	N	-					
	32		÷	N	-					
	33		÷	N	-					
	34		÷	N	-					
	35		÷	N	-					
	36		÷	N	-					

Index of Claims	Application/Control No.	Applicant(s)/Patent Under Reexamination
	10315250	GOERTZ, MAGNUS
	Examiner	Art Unit
	Ryan F Pitaro	2174

✓	Rejected	-	Cancelled	N	Non-Elected	A	Appeal
=	Allowed	÷	Restricted	I	Interference	O	Objected

☐ Claims renumbered in the same order as presented by applicant ☐ CPA ☐ T.D. ☐ R.1.47

CLAIM		DATE								
Final	Original	11/09/2007	06/23/2008	12/21/2008	07/06/2009	11/20/2009	05/23/2010			
	37		÷	N	-					
	38		÷	N	-					
	39		÷	N	-					
	40		÷	N	-					
	41		÷	N	-					
	42		÷	N	-					
	43		÷	N	-					
	44		÷	N	-					
	45		÷	N	-					
	46		÷	N	-					
	47		÷	N	-					
	48									
	49									
	50									
	51									
	52									
	53									
	54									
	55									
	56									
	57									
	58									
	59									
	60									
	61									
	62									
	63									
	64									
	65									

Search Notes	Application/Control No.	Applicant(s)/Patent Under Reexamination
	10315250	GOERTZ, MAGNUS
	Examiner	Art Unit
	Ryan F Pitaro	2174

SEARCHED			
Class	Subclass	Date	Examiner
Update	Search	11/8/2007	RFP
Update	Search	6/17/2008	RFP
Update	Search	12/21/2008	RFP
Update	Search	4/22/2009	RFP
Update	Search	11/20/2009	RFP
Update	Search	5/22/2010	RFP

SEARCH NOTES		
Search Notes	Date	Examiner
Update Search	11/8/2007	RFP
Update Search	6/17/2008	RFP
EAST	12/21/2008	RFP
Internet	12/21/2008	RFP
Safari Online Books	12/21/2008	RFP
IEEE	12/21/2008	RFP
ACM	12/21/2008	RFP
Update Search	4/22/2009	RFP
Update Search	11/20/2009	RFP
Update Search	5/22/2010	RFP
Internet Search	5/22/2010	RFP

INTERFERENCE SEARCH			
Class	Subclass	Date	Examiner

PTO/SB/08a (01-10)
Approved for use through 07/31/2012. OMB 0651-0031
U.S. Patent and Trademark Office; U.S. DEPARTMENT OF COMMERCE
Under the Paperwork Reduction Act of 1995, no persons are required to respond to a collection of information unless it contains a valid OMB control number.

INFORMATION DISCLOSURE STATEMENT BY APPLICANT (**Not for submission under 37 CFR 1.99)**		
	Application Number	10315250
	Filing Date	2002-12-10
	First Named Inventor	Magnus Goertz
	Art Unit	2174
	Examiner Name	Ryan F. Pitaro
	Attorney Docket Number	NEONODE.P004

U.S.PATENTS Remove

Examiner Initial*	Cite No	Patent Number	Kind Code[1]	Issue Date	Name of Patentee or Applicant of cited Document	Pages,Columns,Lines where Relevant Passages or Relevant Figures Appear
/R.P./	1	6639584	B1	2003-10-28	Li	

If you wish to add additional U.S. Patent citation information please click the Add button. Add

U.S.PATENT APPLICATION PUBLICATIONS Remove

Examiner Initial*	Cite No	Publication Number	Kind Code[1]	Publication Date	Name of Patentee or Applicant of cited Document	Pages,Columns,Lines where Relevant Passages or Relevant Figures Appear
	1					

If you wish to add additional U.S. Published Application citation information please click the Add button. Add

FOREIGN PATENT DOCUMENTS Remove

Examiner Initial*	Cite No	Foreign Document Number[3]	Country Code[2] i	Kind Code[4]	Publication Date	Name of Patentee or Applicant of cited Document	Pages,Columns,Lines where Relevant Passages or Relevant Figures Appear	T[5]
	1							☐

If you wish to add additional Foreign Patent Document citation information please click the Add button Add

NON-PATENT LITERATURE DOCUMENTS Remove

Examiner Initials*	Cite No	Include name of the author (in CAPITAL LETTERS), title of the article (when appropriate), title of the item (book, magazine, journal, serial, symposium, catalog, etc), date, pages(s), volume-issue number(s), publisher, city and/or country where published.	T[5]

INFORMATION DISCLOSURE STATEMENT BY APPLICANT (**Not for submission under 37 CFR 1.99)**		
	Application Number	10315250
	Filing Date	2002-12-10
	First Named Inventor	Magnus Goertz
	Art Unit	2174
	Examiner Name	Ryan F. Pitaro
	Attorney Docket Number	NEONODE.P004

	1		☐

If you wish to add additional non-patent literature document citation information please click the Add button **Add**

EXAMINER SIGNATURE

Examiner Signature	/Ryan Pitaro/	Date Considered	05/26/2010

*EXAMINER: Initial if reference considered, whether or not citation is in conformance with MPEP 609. Draw line through a citation if not in conformance and not considered. Include copy of this form with next communication to applicant.

[1] See Kind Codes of USPTO Patent Documents at www.USPTO.GOV or MPEP 901.04. [2] Enter office that issued the document, by the two-letter code (WIPO Standard ST.3). [3] For Japanese patent documents, the indication of the year of the reign of the Emperor must precede the serial number of the patent document. [4] Kind of document by the appropriate symbols as indicated on the document under WIPO Standard ST.16 if possible. [5] Applicant is to place a check mark here if English language translation is attached.

PTO/SB/08a (01-10)
Approved for use through 07/31/2012. OMB 0651-0031
U.S. Patent and Trademark Office; U.S. DEPARTMENT OF COMMERCE
Under the Paperwork Reduction Act of 1995, no persons are required to respond to a collection of information unless it contains a valid OMB control number.

INFORMATION DISCLOSURE STATEMENT BY APPLICANT (**Not for submission under 37 CFR 1.99)**		
	Application Number	10315250
	Filing Date	2002-12-10
	First Named Inventor	Magnus Goertz
	Art Unit	2174
	Examiner Name	Ryan F. Pitaro
	Attorney Docket Number	NEONODE.P004

U.S.PATENTS Remove

Examiner Initial*	Cite No	Patent Number	Kind Code[1]	Issue Date	Name of Patentee or Applicant of cited Document	Pages,Columns,Lines where Relevant Passages or Relevant Figures Appear
	1	6639584	B1	2003-10-28	Li	

If you wish to add additional U.S. Patent citation information please click the Add button. Add

U.S.PATENT APPLICATION PUBLICATIONS Remove

Examiner Initial*	Cite No	Publication Number	Kind Code[1]	Publication Date	Name of Patentee or Applicant of cited Document	Pages,Columns,Lines where Relevant Passages or Relevant Figures Appear
	1					

If you wish to add additional U.S. Published Application citation information please click the Add button. Add

FOREIGN PATENT DOCUMENTS Remove

Examiner Initial*	Cite No	Foreign Document Number[3]	Country Code[2] ¡	Kind Code[4]	Publication Date	Name of Patentee or Applicant of cited Document	Pages,Columns,Lines where Relevant Passages or Relevant Figures Appear	T[5]
	1							☐

If you wish to add additional Foreign Patent Document citation information please click the Add button Add

NON-PATENT LITERATURE DOCUMENTS Remove

Examiner Initials*	Cite No	Include name of the author (in CAPITAL LETTERS), title of the article (when appropriate), title of the item (book, magazine, journal, serial, symposium, catalog, etc), date, pages(s), volume-issue number(s), publisher, city and/or country where published.	T[5]

INFORMATION DISCLOSURE STATEMENT BY APPLICANT (**Not for submission under 37 CFR 1.99)**		
	Application Number	10315250
	Filing Date	2002-12-10
	First Named Inventor	Magnus Goertz
	Art Unit	2174
	Examiner Name	Ryan F. Pitaro
	Attorney Docket Number	NEONODE.P004

	1		☐

If you wish to add additional non-patent literature document citation information please click the Add button Add

EXAMINER SIGNATURE

Examiner Signature		Date Considered	

*EXAMINER: Initial if reference considered, whether or not citation is in conformance with MPEP 609. Draw line through a citation if not in conformance and not considered. Include copy of this form with next communication to applicant.

[1] See Kind Codes of USPTO Patent Documents at www.USPTO.GOV or MPEP 901.04. [2] Enter office that issued the document, by the two-letter code (WIPO Standard ST.3). [3] For Japanese patent documents, the indication of the year of the reign of the Emperor must precede the serial number of the patent document. [4] Kind of document by the appropriate symbols as indicated on the document under WIPO Standard ST.16 if possible. [5] Applicant is to place a check mark here if English language translation is attached.

INFORMATION DISCLOSURE STATEMENT BY APPLICANT (Not for submission under 37 CFR 1.99)		
	Application Number	10315250
	Filing Date	2002-12-10
	First Named Inventor	Magnus Goertz
	Art Unit	2174
	Examiner Name	Ryan F. Pitaro
	Attorney Docket Number	NEONODE.P004

CERTIFICATION STATEMENT

Please see 37 CFR 1.97 and 1.98 to make the appropriate selection(s):

☐ That each item of information contained in the information disclosure statement was first cited in any communication from a foreign patent office in a counterpart foreign application not more than three months prior to the filing of the information disclosure statement. See 37 CFR 1.97(e)(1).

OR

☐ That no item of information contained in the information disclosure statement was cited in a communication from a foreign patent office in a counterpart foreign application, and, to the knowledge of the person signing the certification after making reasonable inquiry, no item of information contained in the information disclosure statement was known to any individual designated in 37 CFR 1.56(c) more than three months prior to the filing of the information disclosure statement. See 37 CFR 1.97(e)(2).

☐ See attached certification statement.

☒ Fee set forth in 37 CFR 1.17 (p) has been submitted herewith.

☐ None

SIGNATURE

A signature of the applicant or representative is required in accordance with CFR 1.33, 10.18. Please see CFR 1.4(d) for the form of the signature.

Signature	/Marc A. Berger/	Date (YYYY-MM-DD)	2010-03-16
Name/Print	Marc A. Berger	Registration Number	44029

This collection of information is required by 37 CFR 1.97 and 1.98. The information is required to obtain or retain a benefit by the public which is to file (and by the USPTO to process) an application. Confidentiality is governed by 35 U.S.C. 122 and 37 CFR 1.14. This collection is estimated to take 1 hour to complete, including gathering, preparing and submitting the completed application form to the USPTO. Time will vary depending upon the individual case. Any comments on the amount of time you require to complete this form and/or suggestions for reducing this burden, should be sent to the Chief Information Officer, U.S. Patent and Trademark Office, U.S. Department of Commerce, P.O. Box 1450, Alexandria, VA 22313-1450. DO NOT SEND FEES OR COMPLETED FORMS TO THIS ADDRESS. **SEND TO: Commissioner for Patents, P.O. Box 1450, Alexandria, VA 22313-1450.**

Privacy Act Statement

The Privacy Act of 1974 (P.L. 93-579) requires that you be given certain information in connection with your submission of the attached form related to a patent application or patent. Accordingly, pursuant to the requirements of the Act, please be advised that: (1) the general authority for the collection of this information is 35 U.S.C. 2(b)(2); (2) furnishing of the information solicited is voluntary; and (3) the principal purpose for which the information is used by the U.S. Patent and Trademark Office is to process and/or examine your submission related to a patent application or patent. If you do not furnish the requested information, the U.S. Patent and Trademark Office may not be able to process and/or examine your submission, which may result in termination of proceedings or abandonment of the application or expiration of the patent.

The information provided by you in this form will be subject to the following routine uses:

1. The information on this form will be treated confidentially to the extent allowed under the Freedom of Information Act (5 U.S.C. 552) and the Privacy Act (5 U.S.C. 552a). Records from this system of records may be disclosed to the Department of Justice to determine whether the Freedom of Information Act requires disclosure of these record s.

2. A record from this system of records may be disclosed, as a routine use, in the course of presenting evidence to a court, magistrate, or administrative tribunal, including disclosures to opposing counsel in the course of settlement negotiations.

3. A record in this system of records may be disclosed, as a routine use, to a Member of Congress submitting a request involving an individual, to whom the record pertains, when the individual has requested assistance from the Member with respect to the subject matter of the record.

4. A record in this system of records may be disclosed, as a routine use, to a contractor of the Agency having need for the information in order to perform a contract. Recipients of information shall be required to comply with the requirements of the Privacy Act of 1974, as amended, pursuant to 5 U.S.C. 552a(m).

5. A record related to an International Application filed under the Patent Cooperation Treaty in this system of records may be disclosed, as a routine use, to the International Bureau of the World Intellectual Property Organization, pursuant to the Patent Cooperation Treaty.

6. A record in this system of records may be disclosed, as a routine use, to another federal agency for purposes of National Security review (35 U.S.C. 181) and for review pursuant to the Atomic Energy Act (42 U.S.C. 218(c)).

7. A record from this system of records may be disclosed, as a routine use, to the Administrator, General Services, or his/her designee, during an inspection of records conducted by GSA as part of that agency's responsibility to recommend improvements in records management practices and programs, under authority of 44 U.S.C. 2904 and 2906. Such disclosure shall be made in accordance with the GSA regulations governing inspection of records for this purpose, and any other relevant (i.e., GSA or Commerce) directive. Such disclosure shall not be used to make determinations about individuals.

8. A record from this system of records may be disclosed, as a routine use, to the public after either publication of the application pursuant to 35 U.S.C. 122(b) or issuance of a patent pursuant to 35 U.S.C. 151. Further, a record may be disclosed, subject to the limitations of 37 CFR 1.14, as a routine use, to the public if the record was filed in an application which became abandoned or in which the proceedings were terminated and which application is referenced by either a published application, an application open to public inspections or an issued patent.

9. A record from this system of records may be disclosed, as a routine use, to a Federal, State, or local law enforcement agency, if the USPTO becomes aware of a violation or potential violation of law or regulation.

Electronic Patent Application Fee Transmittal	
Application Number:	10315250
Filing Date:	10-Dec-2002
Title of Invention:	User interface
First Named Inventor/Applicant Name:	Magnus Goertz
Filer:	Marc Aron Berger
Attorney Docket Number:	NEONODE.P004
Filed as Large Entity	

Utility under 35 USC 111(a) Filing Fees

Description	Fee Code	Quantity	Amount	Sub-Total in USD($)
Basic Filing:				
Pages:				
Claims:				
Miscellaneous-Filing:				
Petition:				
Patent-Appeals-and-Interference:				
Post-Allowance-and-Post-Issuance:				
Extension-of-Time:				

Description	Fee Code	Quantity	Amount	Sub-Total in USD($)
Miscellaneous:				
Submission- Information Disclosure Stmt	1806	1	180	180
		Total in USD ($)		**180**

Electronic Acknowledgement Receipt	
EFS ID:	7214152
Application Number:	10315250
International Application Number:	
Confirmation Number:	1226
Title of Invention:	User interface
First Named Inventor/Applicant Name:	Magnus Goertz
Customer Number:	75660
Filer:	Marc Aron Berger
Filer Authorized By:	
Attorney Docket Number:	NEONODE.P004
Receipt Date:	16-MAR-2010
Filing Date:	10-DEC-2002
Time Stamp:	04:13:59
Application Type:	Utility under 35 USC 111(a)

Payment information:

Submitted with Payment	yes
Payment Type	Credit Card
Payment was successfully received in RAM	$180
RAM confirmation Number	6843
Deposit Account	
Authorized User	

File Listing:

Document Number	Document Description	File Name	File Size(Bytes)/ Message Digest	Multi Part /.zip	Pages (if appl.)

1	Information Disclosure Statement (IDS) Filed (SB/08)	NEONODE_P004_IDS_16_Mar_2010.pdf	761106 40d3136259bd610cc05316378f2dabf285517753	no	4
Warnings:					
Information:					
2	Fee Worksheet (PTO-875)	fee-info.pdf	29923 4a61a932625757780ec6f2f947c93e7dc09a3251	no	2
Warnings:					
Information:					
			Total Files Size (in bytes):	791029	

This Acknowledgement Receipt evidences receipt on the noted date by the USPTO of the indicated documents, characterized by the applicant, and including page counts, where applicable. It serves as evidence of receipt similar to a Post Card, as described in MPEP 503.

New Applications Under 35 U.S.C. 111
If a new application is being filed and the application includes the necessary components for a filing date (see 37 CFR 1.53(b)-(d) and MPEP 506), a Filing Receipt (37 CFR 1.54) will be issued in due course and the date shown on this Acknowledgement Receipt will establish the filing date of the application.

National Stage of an International Application under 35 U.S.C. 371
If a timely submission to enter the national stage of an international application is compliant with the conditions of 35 U.S.C. 371 and other applicable requirements a Form PCT/DO/EO/903 indicating acceptance of the application as a national stage submission under 35 U.S.C. 371 will be issued in addition to the Filing Receipt, in due course.

New International Application Filed with the USPTO as a Receiving Office
If a new international application is being filed and the international application includes the necessary components for an international filing date (see PCT Article 11 and MPEP 1810), a Notification of the International Application Number and of the International Filing Date (Form PCT/RO/105) will be issued in due course, subject to prescriptions concerning national security, and the date shown on this Acknowledgement Receipt will establish the international filing date of the application.

Attorney's Docket No.: NEONODE.P004 *PATENT*

IN THE UNITED STATES PATENT AND TRADEMARK OFFICE

In Re Patent Application of:	)	
	)	Examiner: Ryan F. Pitaro
Magnus Goertz	)	
	)	Art Unit: 2174
Application No: 10/315,250	)	
	)	
Filed: December 10, 2002	)	
	)	
For: USER INTERFACE FOR MOBILE HANDHELD COMPUTER UNIT	)	
	)	

Mail Stop AMENDMENT
Commissioner for Patents
P. O. Box 1450
Alexandria, VA 22313-1450

AMENDMENT AND RESPONSE TO OFFICE ACTION

UNDER 37 C.F.R. §1.111

Sir:

In response to the Office Action dated November 24, 2009, applicant respectfully requests that the remarks below be taken into consideration.

IN THE CLAIMS:

Please substitute the following claims for the pending claims with the same number:

1. (currently amended) A computer readable medium storing a computer program with computer program code, which, when read by a mobile handheld computer unit, allows the computer to present a user interface for the mobile handheld computer unit, the user interface comprising:

a touch sensitive area in which representations of at least one function are displayed, and each function of said at least one function being mapped to a corresponding location in the touch sensitive area at which the representation of the function is displayed, and being activated by a multi-step operation comprising (i) an object touching the corresponding location and then (ii) the object gliding along the touch sensitive area away from the touched location.

2. (previously presented) The computer readable medium of claim **1**, wherein one function from the at least one function, when activated, causes the user interface to display icons representing different services or settings for a currently active application.

3. (previously presented) The computer readable medium of claim **2**, wherein the user interface is characterised in, that a selection of a preferred service or setting is done by tapping on a display icon corresponding to the preferred service or setting.

4. (previously presented) The computer readable medium of claim **1**, wherein one function from at least one function, when activated, causes the user interface to display a keyboard and a text field.

5. (previously presented) The computer readable medium of claim **4**, wherein said text field is used for inputting and editing of text through said keyboard.

6. (previously presented) The computer readable medium of claim **1**, wherein one function from the at least one function, when activated, causes the user interface to display a list with a library of available applications and files on the mobile handheld computer unit.

7. (previously presented) The computer readable medium of claim **6**, wherein the user interface is characterised in, that a selection of an application or file is done by gliding the object along said touch sensitive area so that a representation of a desired one of said application or file is highlighted, raising said object from said touch sensitive area, and then tapping on said touch sensitive area.

8. (previously presented) The computer readable medium of claim **7**, wherein the user interface is characterised in, that at any given time said list presents only files or only applications, and that an area of said list presents a field through which said list can be changed from presenting files to presenting applications, or from presenting applications to presenting files.

9. (previously presented) The computer readable medium of claim **7**, wherein the user interface is characterised in, that, one item in said list is highlighted by a moveable marking, and the user interface enables list navigation whereby gliding the object along the touch sensitive area in a direction towards the top of said list or towards the bottom of said list causes said marking to move in the same direction without scrolling the list.

10. (previously presented) The computer readable medium of claim **9**, wherein the user interface is characterised in, that, if the number of applications or files in said list exceeds the number of applications or files that can be presented on said touch sensitive area as content, and if the object is (i) glided along said touch sensitive area to the top or bottom of said touch sensitive area, then (ii) raised above said touch sensitive area, then (iii) replaced on said touch sensitive area, and then (iv) again glided along said touch sensitive area to the top or bottom of said touch sensitive area, said list navigation pages the content of said list up or down by one whole page.

11. (previously presented) The computer readable medium of claim **10**, wherein the user interface is characterised in, that if the object is raised from any first position on said touch sensitive area and then replaced on any second position on said touch sensitive area, said list navigation can be continued from said second position.

12. (previously presented) The computer readable medium of claim **1**, wherein the user interface is characterised in, that an active application, function, service or setting is advanced one step by gliding the object

along the touch sensitive area from left to right, and that the active application, function, service or setting is closed or backed one step by gliding the object along the touch sensitive area from right to left.

13. (previously presented) The computer readable medium of claim **1**, wherein the user interface is characterised in, that said representations of said at least one function are located at the bottom of said touch sensitive area.

14. (previously presented) The computer readable medium of claim **1**, wherein the touch sensitive area is 2-3 inches in diagonal dimension.

15. (previously presented) An enclosure adapted to cover the mobile handheld computer unit according to Claim **1**, characterised in, that said enclosure is provided with an opening for said touch sensitive area.

16. (previously presented) The enclosure according to Claim **15**, characterised in, that said enclosure is removable and exchangeable.

17. (cancelled)

18. (previously presented) The computer readable medium of claim **1**, characterised in, that said computer program code is adapted to function as a shell upon an operating system.

19. – **47.** (cancelled)

REMARKS

Applicant expresses appreciation to the Examiner for the courtesy of an interview granted to applicant's representative Marc A. Berger (Reg. No. 44,029) and to Yossi Shain. The interview was held by telephone on Monday, February 22, 2010. The substance of the interview concerned the amendments to claim **1**.

Applicant has carefully studied the outstanding Office Action. The present amendment is intended to place the application in condition for allowance and is believed to overcome all of the objections and rejections made by the Examiner. Favorable reconsideration and allowance of the application are respectfully requested.

Applicant has amended claim **1** to properly claim the present invention. No new matter has been introduced. Claims **1** – **16** and **18** are presented for examination.

In Paragraphs 2 and 3 of the Office Action, the Examiner has rejected claim **1** under 35 U.S.C. §103(a) as being unpatentable over Nakajima et al., U.S. Patent No. 6,346,935 ("Nakajima") in view of Hoshino et al., U.S. Publ. No. 2004/0021643 ("Hoshino").

In Paragraph 4 of the Office Action, the Examiner has rejected claims **2** – **11**, **14** – **16** and **18** under 35 U.S.C. §103(a) as being unpatentable over Nakajima in view of Hoshino, and in view of Rogue, Palm Pilot: The Ultimate Guide, 2nd Edition ("Rogue").

In Paragraph 5 of the Office Action, the Examiner has rejected claims **12** and **13** under 35 U.S.C. §103(a) as being unpatentable over Nakajima in view of Rogue, in view of Hoshino, and in view of O'Rourke, US Patent No. 7,225,408 ("O'Rourke").

Brief Discussion of Prior Art

Nakajima, Rogue and O'Rourke are discussed in applicant's response filed on July 13, 2009.

Hoshino describes a touch screen user interface with two distinct user operations; namely, (1) touch, and (2) drag. Since a drag operation begins with an initial touch, in order to distinguish between these operations (1) and (2), it is necessary to discriminate between a touch operation and the initial touch of a drag operation. To do so, Hoshino uses a pressure sensor, in addition to a touch sensor. The pressure sensor discriminates between three states; namely, (a) no touch, (b) a light touch, and (c) a hard touch, corresponding to respective pressure levels 0, P1 and P2 (Hoshino/ pars. 10, 57, 79 – 81, 91 and 92; step 103 of FIG. 7, step 205 of FIG. 12, step 305 of FIG. 15, step 406 of FIG. 18 and step 506 of FIG. 21).

Hoshino associates a drag operation with a soft initial touch, and associates a touch operation with a hard touch. Hoshino is thereby able to discriminate between a touch operation and the initial touch of a drag operation. Hoshino activates a function in response to a hard touch, but does not activate a function in response to a soft touch.

Response to Examiner's Arguments

In rejecting independent claim **1** in Paragraph 3 of the Office Action, the Examiner has cited pars. 92 and 93 of Hoshino as teaching a function being activated in response to an object touching a corresponding location and then gliding along the touch sensitive area away from the location. Applicant respectfully submits that, unlike the claimed invention, Hoshino activates the function solely in response to a

push-in operation; i.e., a hard touch, and not in response to a drag operation. Indeed, at par. 92 Hoshino recites

> When P >= P2, an operation for activating the function may be performed in a manner similar to steps 104 – 107 in FIG. 7.

Applicant notes that in FIG. 7, from step 100 (START) through step 107, function activation occurs solely in response to a hard touch on an associated icon, irrespective of whether or not a drag is performed.

In distinction, the claimed invention activates a function in response to a multi-step touch-and-glide operation. Thus in particular, referring to the illustration below, the claimed invention responds to a (hard) touch followed by a glide differently than Hoshino. Specifically, the claimed invention activates a function after the glide, whereas Hoshino activates the function after the (hard) touch.

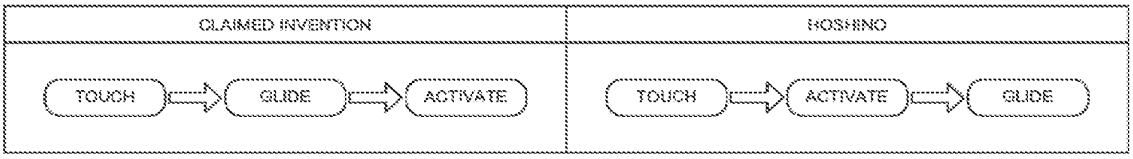

Function activation operation of claimed invention vs. that of Hoshino

The table below summarizes some of the salient distinctions between the claimed invention and Hoshino.

Some distinctions between claimed invention and Hoshino		
	Claimed invention	**Hoshino**
Objective	Novel touch-and-glide user interface operation	Discriminate between two conventional operations; namely, (1) touch, and (2) drag-and-drop
Hardware	Touch screen	Touch screen with pressure sensor
Function Activation	In response to both steps of a multi-step operation; namely, (1) touch, followed by (2) a glide	In response to hard touch

In order to further distinguish the claimed invention over the prior art, applicant has amended claim **1** to include the limitation of a multi-step operation comprising (1) a touch, followed by (2) a glide away from the touched position.

The rejections of the claims **1** – **16** and **18** in paragraphs 2 - 5 of the Office Action will now be dealt with specifically.

As to amended independent claim **1** for a computer readable medium, applicant respectfully submits, as indicated hereinabove, that the limitation in claim **1** of

"*each function … being activated by a multi-step operation comprising (i) an object touching the corresponding location and then (ii) the object gliding along the touch sensitive area away from the touched location*"

is neither shown nor suggested in Nakajima, Hoshino, Rogue or O'Rourke.

In Paragraph 3 of the Office Action, the Examiner has indicated that it would have been obvious to combine the teaching of Hoshino with the medium of Nakajima. Applicant respectfully disagrees. Hoshino does not teach gliding a finger away from an icon. Instead, Hoshino teaches a drag-and-drop operation for moving an icon. In Nakajima the icons are either carve-outs in a frame surrounding a touch pad, or icons on an overlay of the touch pad. It is not possible to move the icons of Nakajima. As such, even the combination of Hoshino and Nakajima does not suggest the touch-and-glide operation of the claimed invention.

Moreover, for the sake of argument, even if one were somehow able to introduce the drag operation of Hoshino into Nakajima, the lack of a pressure sensor in Nakajima would cause Nakajima to activate a function upon the initial touch of the drag, and ignore the drag

altogether. In fact Hoshino, at pars. 7 – 9, teaches away from trying to support a drag-and-drop operation on a touch screen that does not have a pressure sensor.

The table below summarizes reasons why it is non-obvious to combine Nakajima and Hoshino.

Some reasons why it is non-obvious to combine Nakajima with Hoshino	
Nakajima	**Hoshino**
Touch sensitive surface is opaque and static	Requires dynamic video display to animate drag-and-drop of icons
Icon is stationary (carve-out in frame surrounding screen, or on overlay sheet)	Requires software generated icon
Touch screen does not have pressure sensor	Requires pressure sensor.

Because claims **2** – **16** and **18** depend from claim **1** and include additional features, applicant respectfully submits that claims **2** – **16** and **18** are not anticipated or rendered obvious by Nakajima, Hoshino, Rogue, O'Rourke, or a combination of Nakajima, Hoshino, Rogue and O'Rourke.

Accordingly claims **1** – **16** and **18** are deemed to be allowable.

Support for Amended Claims in Original Specification

Independent claim **1** for a computer readable medium has been amended to include the limitation of a multi-step operation comprising (1) a touch, followed by (2) a glide. This limitation is supported in the original specification at least by the Abstract, by FIG. 2, where the arrow at A indicates a touch and the arrow at B indicates a glide, and by the description thereof at par. 47.

For the foregoing reasons, applicant respectfully submits that the applicable objections and rejections have been overcome and that the claims are in condition for allowance.

If any matters can be resolved by telephone, applicant requests that the Patent and Trademark Office please contact the applicant at the telephone number listed below.

Respectfully submitted,

Dated: February 22, 2010

/Marc A. Berger/
Marc A. Berger
Reg. No. 44,029

P.O. Box 691
Soquel, CA 95073
(831) 426-8200

Electronic Acknowledgement Receipt

EFS ID:	7053773
Application Number:	10315250
International Application Number:	
Confirmation Number:	1226
Title of Invention:	User interface
First Named Inventor/Applicant Name:	Magnus Goertz
Customer Number:	75660
Filer:	Marc Aron Berger
Filer Authorized By:	
Attorney Docket Number:	NEONODE.P004
Receipt Date:	22-FEB-2010
Filing Date:	10-DEC-2002
Time Stamp:	08:32:48
Application Type:	Utility under 35 USC 111(a)

Payment information:

Submitted with Payment	no

File Listing:

Document Number	Document Description	File Name	File Size(Bytes)/ Message Digest	Multi Part /.zip	Pages (if appl.)
1	Amendment/Req. Reconsideration-After Non-Final Reject	NEONODEP004Amendment_02-22-2010.pdf	98239 65a4aea7bebbefec6924c7b65b9e5010c56c21b2	no	11

Warnings:	
Information:	

Total Files Size (in bytes):	98239

This Acknowledgement Receipt evidences receipt on the noted date by the USPTO of the indicated documents, characterized by the applicant, and including page counts, where applicable. It serves as evidence of receipt similar to a Post Card, as described in MPEP 503.

New Applications Under 35 U.S.C. 111
If a new application is being filed and the application includes the necessary components for a filing date (see 37 CFR 1.53(b)-(d) and MPEP 506), a Filing Receipt (37 CFR 1.54) will be issued in due course and the date shown on this Acknowledgement Receipt will establish the filing date of the application.

National Stage of an International Application under 35 U.S.C. 371
If a timely submission to enter the national stage of an international application is compliant with the conditions of 35 U.S.C. 371 and other applicable requirements a Form PCT/DO/EO/903 indicating acceptance of the application as a national stage submission under 35 U.S.C. 371 will be issued in addition to the Filing Receipt, in due course.

New International Application Filed with the USPTO as a Receiving Office
If a new international application is being filed and the international application includes the necessary components for an international filing date (see PCT Article 11 and MPEP 1810), a Notification of the International Application Number and of the International Filing Date (Form PCT/RO/105) will be issued in due course, subject to prescriptions concerning national security, and the date shown on this Acknowledgement Receipt will establish the international filing date of the application.

PTO/SB/06 (07-06)
Approved for use through 1/31/2007. OMB 0651-0032
U.S. Patent and Trademark Office; U.S. DEPARTMENT OF COMMERCE
Under the Paperwork Reduction Act of 1995, no persons are required to respond to a collection of information unless it displays a valid OMB control number.

PATENT APPLICATION FEE DETERMINATION RECORD

Substitute for Form PTO-875

Application or Docket Number	Filing Date	☐ To be Mailed
10/315,250	12/10/2002	

APPLICATION AS FILED – PART I

	(Column 1)	(Column 2)	SMALL ENTITY ☒		OR	OTHER THAN SMALL ENTITY	
FOR	NUMBER FILED	NUMBER EXTRA	RATE ($)	FEE ($)		RATE ($)	FEE ($)
☐ BASIC FEE (37 CFR 1.16(a), (b), or (c))	N/A	N/A	N/A			N/A	
☐ SEARCH FEE (37 CFR 1.16(k), (i), or (m))	N/A	N/A	N/A			N/A	
☐ EXAMINATION FEE (37 CFR 1.16(o), (p), or (q))	N/A	N/A	N/A			N/A	
TOTAL CLAIMS (37 CFR 1.16(i))	minus 20 =	*	X $ =		OR	X $ =	
INDEPENDENT CLAIMS (37 CFR 1.16(h))	minus 3 =	*	X $ =			X $ =	
☐ APPLICATION SIZE FEE (37 CFR 1.16(s))	If the specification and drawings exceed 100 sheets of paper, the application size fee due is $250 ($125 for small entity) for each additional 50 sheets or fraction thereof. See 35 U.S.C. 41(a)(1)(G) and 37 CFR 1.16(s).						
☐ MULTIPLE DEPENDENT CLAIM PRESENT (37 CFR 1.16(j))							
* If the difference in column 1 is less than zero, enter "0" in column 2.			TOTAL			TOTAL	

APPLICATION AS AMENDED – PART II

AMENDMENT	02/22/2010	(Column 1) CLAIMS REMAINING AFTER AMENDMENT		(Column 2) HIGHEST NUMBER PREVIOUSLY PAID FOR	(Column 3) PRESENT EXTRA	SMALL ENTITY RATE ($)	ADDITIONAL FEE ($)	OR	OTHER THAN SMALL ENTITY RATE ($)	ADDITIONAL FEE ($)
	Total (37 CFR 1.16(i))	* 17	Minus	** 47	= 0	X $26 =	0	OR	X $ =	
	Independent (37 CFR 1.16(h))	* 1	Minus	***8	= 0	X $110 =	0	OR	X $ =	
	☐ Application Size Fee (37 CFR 1.16(s))									
	☐ FIRST PRESENTATION OF MULTIPLE DEPENDENT CLAIM (37 CFR 1.16(j))							OR		
						TOTAL ADD'L FEE	0	OR	TOTAL ADD'L FEE	

AMENDMENT		(Column 1) CLAIMS REMAINING AFTER AMENDMENT		(Column 2) HIGHEST NUMBER PREVIOUSLY PAID FOR	(Column 3) PRESENT EXTRA	RATE ($)	ADDITIONAL FEE ($)	OR	RATE ($)	ADDITIONAL FEE ($)
	Total (37 CFR 1.16(i))	*	Minus	**	=	X $ =		OR	X $ =	
	Independent (37 CFR 1.16(h))	*	Minus	***	=	X $ =		OR	X $ =	
	☐ Application Size Fee (37 CFR 1.16(s))									
	☐ FIRST PRESENTATION OF MULTIPLE DEPENDENT CLAIM (37 CFR 1.16(j))							OR		
						TOTAL ADD'L FEE		OR	TOTAL ADD'L FEE	

* If the entry in column 1 is less than the entry in column 2, write "0" in column 3.

** If the "Highest Number Previously Paid For" IN THIS SPACE is less than 20, enter "20".

*** If the "Highest Number Previously Paid For" IN THIS SPACE is less than 3, enter "3".

The "Highest Number Previously Paid For" (Total or Independent) is the highest number found in the appropriate box in column 1.

Legal Instrument Examiner:
/DESHONNE T. MARTINO/

This collection of information is required by 37 CFR 1.16. The information is required to obtain or retain a benefit by the public which is to file (and by the USPTO to process) an application. Confidentiality is governed by 35 U.S.C. 122 and 37 CFR 1.14. This collection is estimated to take 12 minutes to complete, including gathering, preparing, and submitting the completed application form to the USPTO. Time will vary depending upon the individual case. Any comments on the amount of time you require to complete this form and/or suggestions for reducing this burden, should be sent to the Chief Information Officer, U.S. Patent and Trademark Office, U.S. Department of Commerce, P.O. Box 1450, Alexandria, VA 22313-1450. DO NOT SEND FEES OR COMPLETED FORMS TO THIS ADDRESS. **SEND TO: Commissioner for Patents, P.O. Box 1450, Alexandria, VA 22313-1450.**

If you need assistance in completing the form, call 1-800-PTO-9199 and select option 2.

UNITED STATES PATENT AND TRADEMARK OFFICE

UNITED STATES DEPARTMENT OF COMMERCE
United States Patent and Trademark Office
Address: COMMISSIONER FOR PATENTS
P.O. Box 1450
Alexandria, Virginia 22313-1450
www.uspto.gov

APPLICATION NO.	FILING DATE	FIRST NAMED INVENTOR	ATTORNEY DOCKET NO.	CONFIRMATION NO.
10/315,250	12/10/2002	Magnus Goertz	NEONODE.P004	1226

75660 7590 11/24/2009

Soquel Group, LLC
P.O. Box 691
Soquel, CA 95073

EXAMINER	
PITARO, RYAN F	
ART UNIT	PAPER NUMBER
2174	

MAIL DATE	DELIVERY MODE
11/24/2009	PAPER

Please find below and/or attached an Office communication concerning this application or proceeding.

The time period for reply, if any, is set in the attached communication.

Office Action Summary	Application No.	Applicant(s)	
	10/315,250	GOERTZ, MAGNUS	
	Examiner	Art Unit	
	RYAN F. PITARO	2174	

-- The MAILING DATE of this communication appears on the cover sheet with the correspondence address --

Period for Reply

A SHORTENED STATUTORY PERIOD FOR REPLY IS SET TO EXPIRE 3 MONTH(S) OR THIRTY (30) DAYS, WHICHEVER IS LONGER, FROM THE MAILING DATE OF THIS COMMUNICATION.

- Extensions of time may be available under the provisions of 37 CFR 1.136(a). In no event, however, may a reply be timely filed after SIX (6) MONTHS from the mailing date of this communication.
- If NO period for reply is specified above, the maximum statutory period will apply and will expire SIX (6) MONTHS from the mailing date of this communication.
- Failure to reply within the set or extended period for reply will, by statute, cause the application to become ABANDONED (35 U.S.C. § 133). Any reply received by the Office later than three months after the mailing date of this communication, even if timely filed, may reduce any earned patent term adjustment. See 37 CFR 1.704(b).

Status

1)☒ Responsive to communication(s) filed on *13 July 2009*.

2a)☐ This action is **FINAL**. 2b)☒ This action is non-final.

3)☐ Since this application is in condition for allowance except for formal matters, prosecution as to the merits is closed in accordance with the practice under *Ex parte Quayle*, 1935 C.D. 11, 453 O.G. 213.

Disposition of Claims

4)☒ Claim(s) *1-16 and 18* is/are pending in the application.

4a) Of the above claim(s) _____ is/are withdrawn from consideration.

5)☐ Claim(s) _____ is/are allowed.

6)☐ Claim(s) *1-16,18* is/are rejected.

7)☐ Claim(s) _____ is/are objected to.

8)☐ Claim(s) _____ are subject to restriction and/or election requirement.

Application Papers

9)☐ The specification is objected to by the Examiner.

10)☐ The drawing(s) filed on _____ is/are: a)☐ accepted or b)☐ objected to by the Examiner.

Applicant may not request that any objection to the drawing(s) be held in abeyance. See 37 CFR 1.85(a).

Replacement drawing sheet(s) including the correction is required if the drawing(s) is objected to. See 37 CFR 1.121(d).

11)☐ The oath or declaration is objected to by the Examiner. Note the attached Office Action or form PTO-152.

Priority under 35 U.S.C. § 119

12)☐ Acknowledgment is made of a claim for foreign priority under 35 U.S.C. § 119(a)-(d) or (f).

a)☐ All b)☐ Some * c)☐ None of:

1.☐ Certified copies of the priority documents have been received.

2.☐ Certified copies of the priority documents have been received in Application No. _____.

3.☐ Copies of the certified copies of the priority documents have been received in this National Stage application from the International Bureau (PCT Rule 17.2(a)).

* See the attached detailed Office action for a list of the certified copies not received.

Attachment(s)

1) ☒ Notice of References Cited (PTO-892)
2) ☐ Notice of Draftsperson's Patent Drawing Review (PTO-948)
3) ☐ Information Disclosure Statement(s) (PTO/SB/08) Paper No(s)/Mail Date _____.
4) ☐ Interview Summary (PTO-413) Paper No(s)/Mail Date. _____ .
5) ☐ Notice of Informal Patent Application
6) ☐ Other: _____.

Response to Amendment

1. This action is in response to the amendment filed 7/13/2009. This action is non-final.

Claim Rejections - 35 USC § 103

2. The following is a quotation of 35 U.S.C. 103(a) which forms the basis for all obviousness rejections set forth in this Office action:

> (a) A patent may not be obtained though the invention is not identically disclosed or described as set forth in section 102 of this title, if the differences between the subject matter sought to be patented and the prior art are such that the subject matter as a whole would have been obvious at the time the invention was made to a person having ordinary skill in the art to which said subject matter pertains. Patentability shall not be negatived by the manner in which the invention was made.

3. Claim 1 is rejected under 35 U.S.C. 103(a) as being unpatentable over Nakajima et al ("Nakajima", 6,346,935) in view of Hoshino et al ("Hoshino", US 20040021643).

As per claim 1, Nakajima teaches a computer readable medium storing a computer program with computer program code, which, when read by a mobile handheld computer unit, allows the computer to present a user interface for the mobile handheld computer unit, the user interface comprising: a touch sensitive area in which representations of a plurality of functions are displayed (Column 15 lines 1-9, *function signs*), and each function of said plurality of functions being mapped to a corresponding location in the touch sensitive area at which the representation of the function is displayed (Column 15 lines 1-9, *stops moving finger*). Nakajima teaches gliding over the

icon Column 15 lines 1-15, *stops moving finger then glides finger to lightly press surface* but fails to distinctly point out touching the icon and gliding away. However, Hoshino teaches an icon being activated by an object touching the corresponding location and then gliding along the touch sensitive area away from the location ([0092]-[0093], drag and drop operation may be used in combination with a push in operation for activating a function). Therefore it would have been obvious at the time of the invention to combine the teaching of Hoshino with the medium of Nakajima. Motivation to do so would have been to apply a known technique to a known system in order to yield advantageous and predictable results.

4. Claims 2-11,14-16,18 rejected under 35 U.S.C. 103(a) as being unpatentable over Nakajima et al ("Nakajima", 6,346,935) and Hoshino et al ("Hoshino", US 20040021643) in view of Rogue ("Rogue", Palm Pilot: The Ultimate Guide, 2nd Edition).

As per claim 2, Nakajima-Hoshino fails to particularly disclose a function to display a plurality of functions. However, Rogue teaches a computer readable medium of claim 1, wherein one function from the plurality of functions, when activated, causes the user interface to display icons representing different services or settings for a currently active application (Figure 1.2-1.3, *Preferences*).Therefore it would have been

obvious to an artisan at the time of the invention to combine the teaching of Rogue with the medium of Nakajima. Motivation to do so would have been to provide a way to reduce screen clutter and only access the applications when needed.

As per claim 3, Nakajima-Hoshino-Rogue teaches a computer readable medium of claim 2, wherein the user interface is characterised in, that a selection of a preferred service or setting is done by tapping on a display icon corresponding to the preferred service or setting (Nakajima, Column 18 lines 30-40, tap).

As per claim 4, Nakajima-Hoshino-Rogue teaches a computer readable medium of claim 1, wherein one function from the plurality of functions, when activated, causes the user interface to display a keyboard and a text field (Rogue, Figure 2.5, power stroke up, Figure 2.6).

As per claim 5, Nakajima-Hoshino-Rogue teaches a wherein said text field is used for inputting and editing of text through said keyboard (Nakajima, Figure 2.6).

As per claim 6, Nakajima-Hoshino-Rogue fails to teach a computer readable medium of claim 1, OFFICIAL NOTICE is taken that file listing is well know in the art. It is extremely common to see a list of functions and files listed, as in directories. Therefore it would have been obvious to an artisan at the time of the invention to

combine the teaching with the medium of Nakajima-Hoshino -Rogue. Motivation to do so would have been to provide a user with a list of options.

As per claim 7, Nakajima-Hoshino -Rogue teaches a computer readable medium of claim 6, wherein the user interface is characterised in, that a selection of an application or file is done by gliding the object along said touch sensitive area so that a representation of a desired one of said application or file is highlighted, raising said object from said touch sensitive area, and then tapping on said touch sensitive area (Nakajima, Column 18 lines 40-56).

As per claim 8, Nakajima-Hoshino -Rogue fails to teach presenting only files or only applications. However OFFICIAL NOTICE is taken that file sorting is well know in the art. It is extremely common to sort a list of functions and files listed by data type. Therefore it would have been obvious to an artisan at the time of the invention to combine the teaching with the medium of Nakajima-Rogue. Motivation to do so would have been to provide a user with a specific list of filtered options.

As per claim 9, Nakajima-Hoshino -Rogue teaches a computer readable medium of claim 7, wherein the user interface is characterised in, that, one item in said list is highlighted by a moveable marking, and gliding the object along the touch sensitive area in a direction towards the top of said list or towards the bottom of said list, causes

said marking to move in the same direction without scrolling the list (Rogue, Figure 1.4, using the menu).

As per claim 10, Nakajima-Hoshino -Rogue teaches a computer readable medium of claim 9, wherein the user interface is characterised in, that, if the number of applications or files in said list exceeds the number of applications or files that can be presented on said touch sensitive area as content, and if the object is (i) glided along said touch sensitive area to the top or bottom position of said touch sensitive area, then (ii) raised above said touch sensitive area, then (iii) replaced on said touch sensitive area, and then (iv) again glided along said touch sensitive area to the top or bottom of said touch sensitive area, said list navigation pages the content of said list up or down one whole page (Nakajima, Column 14 lines 45-57 and Column 2 lines 15-23, wherein Nakajima is an absolute pointing device and a swipe from the top of the page to the bottom will result in a refresh by a whole page).

As per claim 11, Nakajima-Hoshino -Rogue teaches a computer readable medium of claim 10, wherein the user interface is characterised in, that if the object is raised from any first position on said touch sensitive area and then replaced on any second position on said touch sensitive area, said navigation can be continued from said second position (Nakajima, Column 14 lines 45-57).

As per claim 14, while Nakajima-Hoshino -Rogue fails to teach a touch sensitive area is 2-3 inches. OFFICIAL NOTICE is taken that screen sizes vary and screens with a touch sensitive area of 2-3 inches diagonally is well known in the art. Therefore it would have been obvious to an artisan at the time of the invention to combine the screen size with the medium of Nakajima-Hoshino -Rogue. Motivation to do so would have been to provide adequate size to operate the touch screen while keeping it small enough to fit in a pocket.

As per claim 15, Nakajima-Hoshino-Rogue teaches a enclosure adapted to cover the mobile handheld computer unit according to Claim 1, characterised in, that said enclosure is provided with an opening for said touch sensitive area (Rogue, Figure 1.1).

As per claim 16, Nakajima-Hoshino-Rogue fails to teach an enclosure is removable and exchangeable. OFFICIAL NOTICE is taken that an enclosure is removable and exchangeable is well known in the art. Therefore it would have been obvious to an artisan at the time of the invention to combine the exchangeable enclosure with the medium of Nakajima-Rogue. Motivation to do so would have been to provide a way to style your mobile device so that it can be personalized to a user's taste.

As per claim 18, Nakajima-Hoshino-Rogue teaches a computer readable medium according to Claim 1, characterised in, that said computer program product is adapted to function as a shell upon an operations system (Rogue, 1.1 Palm Pilot Basics).

5. Claims 12 and 13 are rejected under 35 U.S.C. 103(a) as being unpatentable over Nakajima et al ("Nakajima", 6,346,935) in view of Rogue ("Rogue", Palm Pilot: The Ultimate Guide, 2nd Edition) and Hoshino et al ("Hoshino", US 20040021643) in view of O'Rourke (O'Rourke, US 7,225,408).

As per claim 12, Nakajima-Hoshino-Rogue teaches a computer readable medium of claim 1, wherein the user interface is characterized in, that an active application, function, service or setting is moved on one step by gliding the object along the touch sensitive area from left to right (Nakajima, Column 14 lines 45-57). However, Nakajima-

Rogue fails to distinctly point out closing or backing one step. However, O'Rourke teaches that the active application, function, service or setting is closed or backed one step (Figure 13, right and left arrows). Therefore it would have been obvious to an artisan at the time of the invention to combine the glide functionality with the forward and backward functionality of O'Rourke. Motivation to do so would have been to provide an easy way to traverse the GUI.

As per claim 13, Nakajima-Hoshino-Rogue-O'Rourke teaches a computer readable medium of claim 1, wherein the user interface is characterized in, that said representations of said plurality of functions are located at the bottom of said touch sensitive area (O'Rourke, Figure 13, icons at bottom right) .

Response to Arguments

Applicant's arguments with respect to claims 1-16,18 have been considered but are moot in view of the new ground(s) of rejection.

The Examiner notes that the OFFICIAL NOTICE set forth in the previous office action has not been contested.

Conclusion

Any inquiry concerning this communication or earlier communications from the examiner should be directed to RYAN F. PITARO whose telephone number is (571)272-4071. The examiner can normally be reached on 9:00am - 5:30pm Mondays through Fridays.

If attempts to reach the examiner by telephone are unsuccessful, the examiner's supervisor, Dennis Chow can be reached on 571-272-7767. The fax phone number for the organization where this application or proceeding is assigned is 571-273-8300.

Information regarding the status of an application may be obtained from the Patent Application Information Retrieval (PAIR) system. Status information for published applications may be obtained from either Private PAIR or Public PAIR. Status information for unpublished applications is available through Private PAIR only. For more information about the PAIR system, see http://pair-direct.uspto.gov. Should you have questions on access to the Private PAIR system, contact the Electronic Business Center (EBC) at 866-217-9197 (toll-free). If you would like assistance from a USPTO Customer Service Representative or access to the automated information system, call 800-786-9199 (IN USA OR CANADA) or 571-272-1000.

/Ryan F Pitaro/
Examiner, Art Unit 2174

Notice of References Cited	Application/Control No. 10/315,250	Applicant(s)/Patent Under Reexamination GOERTZ, MAGNUS	
	Examiner RYAN F. PITARO	Art Unit 2174	Page 1 of 1

U.S. PATENT DOCUMENTS

*		Document Number Country Code-Number-Kind Code	Date MM-YYYY	Name	Classification
*	A	US-2004/0021643	02-2004	Hoshino et al.	345/173
	B	US-			
	C	US-			
	D	US-			
	E	US-			
	F	US-			
	G	US-			
	H	US-			
	I	US-			
	J	US-			
	K	US-			
	L	US-			
	M	US-			

FOREIGN PATENT DOCUMENTS

*		Document Number Country Code-Number-Kind Code	Date MM-YYYY	Country	Name	Classification
	N					
	O					
	P					
	Q					
	R					
	S					
	T					

NON-PATENT DOCUMENTS

*		Include as applicable: Author, Title Date, Publisher, Edition or Volume, Pertinent Pages)
	U	
	V	
	W	
	X	

*A copy of this reference is not being furnished with this Office action. (See MPEP § 707.05(a).)
Dates in MM-YYYY format are publication dates. Classifications may be US or foreign.

EAST Search History

EAST Search History (Prior Art)

Ref #	Hits	Search Query	DBs	Default Operator	Plurals	Time Stamp
L1	31	icon with drag with activate	US-PGPUB; USPAT; EPO; JPO; DERWENT	OR	OFF	2009/11/20 14:29
L2	148	icon with drag with activat$7	US-PGPUB; USPAT; EPO; JPO; DERWENT	OR	ON	2009/11/20 14:29
L3	68	icon with drag with activat$7 and @ay<="2002"	US-PGPUB; USPAT; EPO; JPO; DERWENT	OR	ON	2009/11/20 14:30
L4	29	bar with drag with activat$7 and @ay<="2002"	US-PGPUB; USPAT; EPO; JPO; DERWENT	OR	ON	2009/11/20 14:36
L5	81	function with drag with activat$7 and @ay<="2002"	US-PGPUB; USPAT; EPO; JPO; DERWENT	OR	ON	2009/11/20 14:37
L11	26	(dock bar) with (glide swipe) with activat$7	US-PGPUB; USPAT; EPO; JPO; DERWENT	OR	OFF	2009/11/20 14:43

L12	34	(dock bar) with (glide swipe) with activat$7	US-PGPUB; USPAT; EPO; JPO; DERWENT	OR	ON	2009/11/20 14:43
L13	54	(glide swipe) with activat$7 with (function application program)	US-PGPUB; USPAT; EPO; JPO; DERWENT	OR	ON	2009/11/20 14:46
L14	24	(glide swipe) with activat$7 with (function application program) and @ay<="2002"	US-PGPUB; USPAT; EPO; JPO; DERWENT	OR	ON	2009/11/20 14:47
L15	30	(glide swipe drag) with icon with activat$7 with (function application program) and @ay<="2002"	US-PGPUB; USPAT; EPO; JPO; DERWENT	OR	ON	2009/11/20 14:48
L16	2	"7441196".pn.	US-PGPUB; USPAT; EPO; JPO; DERWENT	OR	OFF	2009/11/20 15:14
L17	503	swipe with screen	US-PGPUB; USPAT; EPO; JPO; DERWENT	OR	ON	2009/11/20 15:14
L18	734	(glide swipe) with screen	US-PGPUB; USPAT; EPO; JPO; DERWENT	OR	ON	2009/11/20 15:14
L19	2	"7286063".pn.	US-PGPUB; USPAT; EPO; JPO; DERWENT	OR	ON	2009/11/20 15:14

L23	263	("20010003845" | "20010012286" | "20010016947" | "20010034647" | "20010042002" | "20010044751" | "20010049824" | "20010051903" | "20020007309" | "20020010642" | "20020016750" | "20020029339" | "20020032782" | "20020035174" | "20020038256" | "20020038259" | "20020042914" | "20020042921" | "20020049631" | "20020056098" | "20020059590" | "20020067376" | "20020077177" | "20020078006" | "20020078453" | "20020098834" | "20020116292" | "20020116320" | "20020166122" | "20030046182" | "20030074661" | "20030095525" | "20030126607" | "20030140017" | "20030146940" | "20030149628" | "20030182195" | "20040003412" | "20040098747" | "20040103439" | "20040117831" | "20040128137" | "20040133848" | "20040148625" | "20040204116" | "20040210824" | "20040260689" | "20050010949" | "20050025550" | "20050075932" | "20050086690" | "20050091118" | "20050160458" | "20050234895" | "20050246231" | "20060155598" | "20060224987" | "20070008332" | "3586771" | "4650977" | "4706121" | "4992940" | "5041312" | "5064999" | "5119188" | "5236199" | "5321749" | "5353016" | "5410326" | "5479268" | "5532735" | "5553242" | "5559548" | "5598523" | "5602596" | "5617570" | "5625781" | "5710887" | "5727129" | "5734719" | "5758126" | "5794210" | "5796252" | "5801702" | "5809204" | "5819220" | "5822014" | "5828839" | "5832208" | "5832459" | "5838314" | "5848396" | "5851149" | "5874906" | "5878222" | "5890175" | "5893064" | "5895454" | "5896133" | "5900905" | "5902353" | "5903729" | "5911145" | "5918014" | "5918213").PN. OR ("5925103" | "5931901" | "5935002" | "5946381" | "5956681" | "5956693" | "5958012" | "5960411" | "5961593" | "5978381" | "5990927" | "6002853" | "6005562" | "6005631" | "6006257" | "6012049" | "6014502" | "6018372" | "6025837" | "6028600" | "6031537" | "6041312" | "6054989" | "6072483" | "6072492" | "6075575" | "6078866" | "6091417" |	US-PGPUB; USPAT; USOCR	OR	OFF	2009/11/20 15:14

		"6094156" | "6101473" | "6112186" | "6129274" | "6138107" | "6142371" | "6151050" | "6151059" | "6151596" | "6151630" | "6154205" | "6160552" | "6167382" | "6172677" | "6177936" | "6193152" | "6198481" | "6199050" | "6199077" | "6199098" | "6205432" | "6205582" | "6211878" | "6212265" | "6223215" | "6226623" | "6226642" | "6229540" | "6237030" | "6243093" | "6253189" | "6260192" | "6266060" | "6269343" | "6269361" | "6269403" | "6271832" | "6282516" | "6285357" | "6285987" | "6286017" | "6286043" | "6288716" | "6292779" | "6292782" | "6292786" | "6292809" | "6295057" | "6298330" | "6300947" | "6301566" | "6312336" | "6314406" | "6317706" | "6330005" | "6330543" | "6333753" | "6334108" | "6334145" | "6336131" | "6337715" | "6345279" | "6356905" | "6381583" | "6388714" | "6396531" | "6397387" | "6401132" | "6407779" | "6411307" | "6411337" | "6415270" | "6417873" | "6418441" | "6421066" | "6421071" | "6421724" | "6438540" | "6445398" | "6460181" | "6476825" | "6477575" | "6484149" | "6487189" | "6487586" | "6490555" | "6509913" | "6516311" | "6522342" | "6532312" | "6535888" | "6570582" | "6571279" | "6583800" | "6606103" | "6606280" | "6606347").PN. OR ("6608633" | "6615247" | "6615248" | "6618039" | "6631523" | "6636246" | "6647373" | "6662224" | "6680714" | "6684062" | "6692358" | "6704727" | "6711552" | "6714534" | "6728731" | "6769989" | "6804786" | "6826572" | "6829646" | "6857102" | "6868525" | "6907556" | "6925595" | "6928610" | "6938073" | "6973669" | "6978263" | "7013435" | "7020845" | "7051281" | "7174512" | "7293276" | "7383515").PN.				
L24	131	touch with slide with function	US-PGPUB; USPAT; USOCR	OR	ON	2009/11/20 15:14

L25	13	("4366475" | "4686332" | "4821030" | "4914624" | "5402151" | "5563632" | "5596346" | "5638060" | "5687331" | "5736974" | "5736976" | "5761485" | "5838973").PN.	US-PGPUB; USPAT; USOCR	OR	OFF	2009/11/20 15:14
L26	175604	object near3 type	US-PGPUB; USPAT; USOCR	OR	OFF	2009/11/20 15:14
L27	5	(file item object) near3 type with open near3 respective	US-PGPUB; USPAT; USOCR	OR	OFF	2009/11/20 15:14
L28	997	open$3 with different with program	US-PGPUB; USPAT; USOCR	OR	OFF	2009/11/20 15:14
L29	2	multiple near3 file near3 selection with open	US-PGPUB; USPAT; USOCR	OR	ON	2009/11/20 15:14
L30	12	applying with command with (plurality multiple) with files	US-PGPUB; USPAT; USOCR	OR	ON	2009/11/20 15:14
L31	30944	(flick stroke) with (open application command)	US-PGPUB; USPAT; EPO; JPO; DERWENT	OR	OFF	2009/11/20 15:14
L32	261	(flick) with (open application command)	US-PGPUB; USPAT; EPO; JPO; DERWENT	OR	ON	2009/11/20 15:14
L33	131	(flick) with (open application command) and @ay<="2002"	US-PGPUB; USPAT; EPO; JPO; DERWENT	OR	ON	2009/11/20 15:14
L34	5	(flick) with (open application command) and @ay<="2002" and "715"/$.ccls.	US-PGPUB; USPAT; EPO; JPO; DERWENT	OR	ON	2009/11/20 15:14
L35	39	(flick) and @ay<="2002" and "715"/$.ccls.	US-PGPUB; USPAT; EPO; JPO; DERWENT	OR	ON	2009/11/20 15:14

L36	981	(flick gesture) and @ay<="2002" and "715"/$.ccls.	US-PGPUB; USPAT; EPO; JPO; DERWENT	OR	ON	2009/11/20 15:14
L37	2372	(flick gesture slide) and @ay<="2002" and "715"/$.ccls.	US-PGPUB; USPAT; EPO; JPO; DERWENT	OR	ON	2009/11/20 15:14
L38	78	(flick gesture slide) and @ay<="2002" and "715"/702,864.ccls.	US-PGPUB; USPAT; EPO; JPO; DERWENT	OR	ON	2009/11/20 15:14
L39	6588	finger near3 (flick gesture slide) and @ay<="2002"	US-PGPUB; USPAT; EPO; JPO; DERWENT	OR	ON	2009/11/20 15:14
L40	87	finger near3 (flick gesture slide) and @ay<="2002" and "715"/$.ccls.	US-PGPUB; USPAT; EPO; JPO; DERWENT	OR	ON	2009/11/20 15:14
L41	0	"5543591,5943052,5907327,4686332".pn.	US-PGPUB; USPAT; EPO; JPO; DERWENT	OR	ON	2009/11/20 15:14
L42	8	("5543591" "5943052" "5907327" "4686332").pn.	US-PGPUB; USPAT; EPO; JPO; DERWENT	OR	ON	2009/11/20 15:14
L43	113453	(glide flick touch swipe) with screen	US-PGPUB; USPAT; EPO; JPO; DERWENT	OR	ON	2009/11/20 15:14

L44	16322	(glide flick touch swipe) with screen with (applications functions)	US-PGPUB; USPAT; EPO; JPO; DERWENT	OR	ON	2009/11/20 15:14
L45	92	(glide flick touch swipe) with screen with (applications functions) and "715"/$.ccls. and @AY="2002"	US-PGPUB; USPAT; EPO; JPO; DERWENT	OR	ON	2009/11/20 15:14
L46	439	(glide flick touch swipe) with screen with (applications functions) and "715"/$.ccls. and @AY<="2002"	US-PGPUB; USPAT; EPO; JPO; DERWENT	OR	ON	2009/11/20 15:14
L47	0	(glide flick swipe) with screen with (applications functions) and "715"/$.ccls. and @AY<="2002"	US-PGPUB; USPAT; EPO; JPO; DERWENT	OR	ON	2009/11/20 15:14
L48	11	(glide flick swipe) with screen and "715"/$.ccls. and @AY<="2002"	US-PGPUB; USPAT; EPO; JPO; DERWENT	OR	ON	2009/11/20 15:14
L49	219	(glide flick gesture swipe) with screen and "715"/$.ccls. and @AY<="2002"	US-PGPUB; USPAT; EPO; JPO; DERWENT	OR	ON	2009/11/20 15:14
L50	302	(glide flick swipe) with screen and @AY<="2002"	US-PGPUB; USPAT; EPO; JPO; DERWENT	OR	ON	2009/11/20 15:14
L51	8	(glide flick swipe) with screen with icon and @AY<="2002"	US-PGPUB; USPAT; EPO; JPO; DERWENT	OR	ON	2009/11/20 15:14

L52	16	("20010011308" | "20030142138" | "20040034801" | "20050253817" | "20050253817" | "20050264833" | "5821933" | "5907327" | "6633310").PN.	US-PGPUB; USPAT; EPO; JPO; DERWENT	OR	ON	2009/11/20 15:14
L53	452	(glide flick swipe) with finger and @AY<="2002"	US-PGPUB; USPAT; EPO; JPO; DERWENT	OR	ON	2009/11/20 15:14
L54	3	(glide flick swipe) with finger and @AY<="2002" and "715"/$.ccls.	US-PGPUB; USPAT; EPO; JPO; DERWENT	OR	ON	2009/11/20 15:14
L55	13	("5250929" | "5568604" | "5579036" | "5612719" | "5661476" | "5748185" | "5767457" | "5883617" | "5928304" | "5943043" | "5943044" | "5995083" | "6049328").PN.	US-PGPUB; USPAT; USOCR	OR	OFF	2009/11/20 15:14
L56	1144	715/716.ccls.	US-PGPUB; USPAT; USOCR	OR	OFF	2009/11/20 15:14
L57	8	715/716.ccls. and dvd near menu	US-PGPUB; USPAT; USOCR	OR	OFF	2009/11/20 15:14
L58	10	715/716.ccls. and dvd near menu	US-PGPUB; USPAT; USOCR	OR	ON	2009/11/20 15:14
L59	429	715/716.ccls. and dvd	US-PGPUB; USPAT; USOCR	OR	ON	2009/11/20 15:14
L60	587	715/716.ccls. and menu	US-PGPUB; USPAT; USOCR	OR	ON	2009/11/20 15:14
L61	55	715/716.ccls. and menu and theme	US-PGPUB; USPAT; USOCR	OR	ON	2009/11/20 15:14
L62	311	715/716.ccls. and menu and effects	US-PGPUB; USPAT; USOCR	OR	ON	2009/11/20 15:14
L63	6	715/716.ccls. and menu with theme	US-PGPUB; USPAT; USOCR	OR	ON	2009/11/20 15:14

L64	1	"7200836".pn.	US-PGPUB; USPAT; USOCR	OR	ON	2009/11/20 15:14
L65	1	"20080120546".pn.	US-PGPUB; USPAT; USOCR	OR	ON	2009/11/20 15:14
L66	504	715/864.ccls.	US-PGPUB; USPAT; USOCR	OR	ON	2009/11/20 15:14
L67	69	715/864.ccls. and keyboard and back and icons and files	US-PGPUB; USPAT; USOCR	OR	ON	2009/11/20 15:14
L68	29	715/864.ccls. and keyboard and back and icons and files and removable	US-PGPUB; USPAT; USOCR	OR	ON	2009/11/20 15:14
L69	44	715/864.ccls. and keyboard and icons and files and @ay<="2002"	US-PGPUB; USPAT; USOCR	OR	ON	2009/11/20 15:14
L70	2	"6346935".pn.	US-PGPUB; USPAT; EPO; JPO; DERWENT	OR	OFF	2009/11/20 15:14
L71	21	(glide flick touch swipe) with (coordinat$7) with screen with (applications functions) and "715"/$.ccls. and @AY<="2002"	US-PGPUB; USPAT; EPO; JPO; DERWENT	OR	ON	2009/11/20 15:14
L72	439	(touch finger) with (glide flick touch swipe) with screen with (applications functions) and "715"/$.ccls. and @AY<="2002"	US-PGPUB; USPAT; EPO; JPO; DERWENT	OR	ON	2009/11/20 15:14
L73	0	(touch finger) with (glide flick swipe) with screen with (applications functions) and "715"/$.ccls. and @AY<="2002"	US-PGPUB; USPAT; EPO; JPO; DERWENT	OR	ON	2009/11/20 15:14
L74	3	(touch finger) with (glide flick swipe) with screen and "715"/$.ccls. and @AY<="2002"	US-PGPUB; USPAT; EPO; JPO; DERWENT	OR	ON	2009/11/20 15:14

L75	2	"6140936".pn.	US-PGPUB; USPAT; EPO; JPO; DERWENT	OR	ON	2009/11/20 15:14
L76	2	"6346935".pn.	US-PGPUB; USPAT; EPO; JPO; DERWENT	OR	ON	2009/11/20 15:14
L77	195	files with applications with list with only	US-PGPUB; USPAT; EPO; JPO; DERWENT	OR	ON	2009/11/20 15:14
L78	102	(file near list) with (application near list)	US-PGPUB; USPAT; EPO; JPO; DERWENT	OR	ON	2009/11/20 15:14
L79	535	(file near view) with application	US-PGPUB; USPAT; EPO; JPO; DERWENT	OR	ON	2009/11/20 15:14
L80	16	sort with application near files	US-PGPUB; USPAT; EPO; JPO; DERWENT	OR	ON	2009/11/20 15:14
L81	632	(programs application) with files with (sort show list) with only	US-PGPUB; USPAT; EPO; JPO; DERWENT	OR	ON	2009/11/20 15:14
L82	57	(programs application) with files with (sort show list) with only and "715"/$.ccls.	US-PGPUB; USPAT; EPO; JPO; DERWENT	OR	ON	2009/11/20 15:14

L83	0	seperate with list with data near type	US-PGPUB; USPAT; EPO; JPO; DERWENT	OR	ON	2009/11/20 15:14
L84	6088	list with data near type	US-PGPUB; USPAT; EPO; JPO; DERWENT	OR	ON	2009/11/20 15:14
L85	684	list with data near type and "715"/$.ccls.	US-PGPUB; USPAT; EPO; JPO; DERWENT	OR	ON	2009/11/20 15:14
L86	635	application near list and file near list	US-PGPUB; USPAT; EPO; JPO; DERWENT	OR	ON	2009/11/20 15:14
L87	273	application near list and file near list and @ay<="2002"	US-PGPUB; USPAT; EPO; JPO; DERWENT	OR	ON	2009/11/20 15:14

EAST Search History (Interference)

<This search history is empty>

11/20/09 3:23:19 PM
C:\Documents and Settings\RPitaro\My Documents\EAST\Workspaces\10315250.wsp

Index of Claims	Application/Control No.	Applicant(s)/Patent Under Reexamination
	10315250	GOERTZ, MAGNUS
	Examiner	Art Unit
	Ryan F Pitaro	2174

✓	Rejected	-	Cancelled	N	Non-Elected	A	Appeal
=	Allowed	÷	Restricted	I	Interference	O	Objected

☐ Claims renumbered in the same order as presented by applicant ☐ CPA ☐ T.D. ☐ R.1.47

CLAIM		DATE								
Final	Original	11/09/2007	06/23/2008	12/21/2008	07/06/2009	11/20/2009				
	1	✓	✓	✓	✓	✓				
	2	✓	✓	✓	✓	✓				
	3	✓	✓	✓	✓	✓				
	4	✓	✓	✓	✓	✓				
	5	✓	✓	✓	✓	✓				
	6	✓	✓	✓	✓	✓				
	7	✓	✓	✓	✓	✓				
	8	✓	✓	✓	✓	✓				
	9	✓	✓	✓	✓	✓				
	10	✓	✓	✓	✓	✓				
	11	✓	✓	✓	✓	✓				
	12	✓	✓	✓	✓	✓				
	13	✓	✓	✓	✓	✓				
	14	✓	✓	✓	✓	✓				
	15	✓	✓	✓	✓	✓				
	16	✓	✓	✓	✓	✓				
	17	✓	✓	✓	-	-				
	18	✓	✓	✓	✓	✓				
	19		÷	N	-					
	20		÷	N	-					
	21		÷	N	-					
	22		÷	N	-					
	23		÷	N	-					
	24		÷	N	-					
	25		÷	N	-					
	26		÷	N	-					
	27		÷	N	-					
	28		÷	N	-					
	29		÷	N	-					
	30		÷	N	-					
	31		÷	N	-					
	32		÷	N	-					
	33		÷	N	-					
	34		÷	N	-					
	35		÷	N	-					
	36		÷	N	-					

Index of Claims	Application/Control No.	Applicant(s)/Patent Under Reexamination
	10315250	GOERTZ, MAGNUS
	Examiner	Art Unit
	Ryan F Pitaro	2174

✓	Rejected	-	Cancelled	N	Non-Elected	A	Appeal
=	Allowed	÷	Restricted	I	Interference	O	Objected

☐ Claims renumbered in the same order as presented by applicant ☐ CPA ☐ T.D. ☐ R.1.47

CLAIM		DATE								
Final	Original	11/09/2007	06/23/2008	12/21/2008	07/06/2009	11/20/2009				
	37		÷	N	-					
	38		÷	N	-					
	39		÷	N	-					
	40		÷	N	-					
	41		÷	N	-					
	42		÷	N	-					
	43		÷	N	-					
	44		÷	N	-					
	45		÷	N	-					
	46		÷	N	-					
	47		÷	N	-					
	48									
	49									
	50									
	51									
	52									
	53									
	54									
	55									
	56									
	57									
	58									
	59									
	60									
	61									
	62									
	63									
	64									
	65									

Search Notes	Application/Control No.	Applicant(s)/Patent Under Reexamination
	10315250	GOERTZ, MAGNUS
	Examiner	Art Unit
	Ryan F Pitaro	2174

SEARCHED			
Class	Subclass	Date	Examiner
Update	Search	11/8/2007	RFP
Update	Search	6/17/2008	RFP
Update	Search	12/21/2008	RFP
Update	Search	4/22/2009	RFP
Update	Search	11/20/2009	RFP

SEARCH NOTES		
Search Notes	Date	Examiner
Update Search	11/8/2007	RFP
Update Search	6/17/2008	RFP
EAST	12/21/2008	RFP
Internet	12/21/2008	RFP
Safari Online Books	12/21/2008	RFP
IEEE	12/21/2008	RFP
ACM	12/21/2008	RFP
Update Search	4/22/2009	RFP
Update Search	11/20/2009	RFP

INTERFERENCE SEARCH			
Class	Subclass	Date	Examiner

Attorney's Docket No.: NEONODE.P004 *PATENT*

IN THE UNITED STATES PATENT AND TRADEMARK OFFICE

In Re Patent Application of:	)	
	)	Examiner: Ryan F. Pitaro
Magnus Goertz	)	
	)	Art Unit: 2174
Application No: 10/315,250	)	
	)	
Filed: December 10, 2002	)	
	)	
For: USER INTERFACE FOR MOBILE HANDHELD COMPUTER UNIT	)	
	)	

Mail Stop AMENDMENT
Commissioner for Patents
P. O. Box 1450
Alexandria, VA 22313-1450

AMENDMENT AND RESPONSE TO OFFICE ACTION

UNDER 37 C.F.R. §1.111

Sir:

In response to the Office Action dated July 8, 2009, applicant respectfully requests that the remarks below be taken into consideration.

IN THE CLAIMS:

Please substitute the following claims for the pending claims with the same number:

1. (previously presented) A computer readable medium storing a computer program with computer program code, which, when read by a mobile handheld computer unit, allows the computer to present a user interface for the mobile handheld computer unit, the user interface comprising:

a touch sensitive area in which representations of at least one function are displayed, and each function of said at least one function being mapped to a corresponding location in the touch sensitive area at which the representation of the function is displayed, and being activated by an object touching the corresponding location and then gliding along the touch sensitive area away from the touched location.

2. (previously presented) The computer readable medium of claim **1**, wherein one function from the at least one function, when activated, causes the user interface to display icons representing different services or settings for a currently active application.

3. (previously presented) The computer readable medium of claim **2**, wherein the user interface is characterised in, that a selection of a preferred service or setting is done by tapping on a display icon corresponding to the preferred service or setting.

4. (previously presented) The computer readable medium of claim **1**, wherein one function from at least one function, when activated, causes the user interface to display a keyboard and a text field.

5. (previously presented) The computer readable medium of claim **4**, wherein said text field is used for inputting and editing of text through said keyboard.

6. (previously presented) The computer readable medium of claim **1**, wherein one function from the at least one function, when activated, causes the user interface to display a list with a library of available applications and files on the mobile handheld computer unit.

7. (previously presented) The computer readable medium of claim **6**, wherein the user interface is characterised in, that a selection of an application or file is done by gliding the object along said touch sensitive area so that a representation of a desired one of said application or file is highlighted, raising said object from said touch sensitive area, and then tapping on said touch sensitive area.

8. (previously presented) The computer readable medium of claim **7**, wherein the user interface is characterised in, that at any given time said list presents only files or only applications, and that an area of said list presents a field through which said list can be changed from presenting files to presenting applications, or from presenting applications to presenting files.

9. (previously presented) The computer readable medium of claim **7**, wherein the user interface is characterised in, that, one item in said list is highlighted by a moveable marking, and the user interface enables list navigation whereby gliding the object along the touch sensitive area in a direction towards the top of said list or towards the bottom of said list causes said marking to move in the same direction without scrolling the list.

10. (previously presented) The computer readable medium of claim **9**, wherein the user interface is characterised in, that, if the number of applications or files in said list exceeds the number of applications or files that can be presented on said touch sensitive area as content, and if the object is (i) glided along said touch sensitive area to the top or bottom of said touch sensitive area, then (ii) raised above said touch sensitive area, then (iii) replaced on said touch sensitive area, and then (iv) again glided along said touch sensitive area to the top or bottom of said touch sensitive area, said list navigation pages the content of said list up or down by one whole page.

11. (previously presented) The computer readable medium of claim **10**, wherein the user interface is characterised in, that if the object is raised from any first position on said touch sensitive area and then replaced on any second position on said touch sensitive area, said list navigation can be continued from said second position.

12. (previously presented) The computer readable medium of claim **1**, wherein the user interface is characterised in, that an active application, function, service or setting is advanced one step by gliding the object

along the touch sensitive area from left to right, and that the active application, function, service or setting is closed or backed one step by gliding the object along the touch sensitive area from right to left.

13. (previously presented) The computer readable medium of claim **1**, wherein the user interface is characterised in, that said representations of said at least one function are located at the bottom of said touch sensitive area.

14. (previously presented) The computer readable medium of claim **1**, wherein the touch sensitive area is 2-3 inches in diagonal dimension.

15. (previously presented) An enclosure adapted to cover the mobile handheld computer unit according to Claim **1**, characterised in, that said enclosure is provided with an opening for said touch sensitive area.

16. (previously presented) The enclosure according to Claim **15**, characterised in, that said enclosure is removable and exchangeable.

17. (cancelled)

18. (previously presented) The computer readable medium of claim **1**, characterised in, that said computer program code is adapted to function as a shell upon an operating system.

19. – **47.** (cancelled)

REMARKS

Applicant expresses appreciation to the Examiner for the courtesy of an interview granted to applicant's representative Marc A. Berger (Reg. No. 44,029). The interview was held by telephone on Monday, July 13, 2009.

As discussed during the interview, applicant wishes to point out that the signs **19a**, etc. of **FIG. 5** of Nakajima are not on the touch surface. They are merely signs, outside of the touch surface **7B**, that indicate the functions assigned to adjacent regions of the touch surface.

As such, applicant respectfully submits that the present claim language "at least one function being mapped to a corresponding location in the touch sensitive area at which the representation of the function is displayed, and being activated by an object touching the corresponding location and then gliding along the touch sensitive area away from the touched location" is not anticipated by Nakajima.

For the foregoing reasons, applicant respectfully submits that the applicable objections and rejections have been overcome and that the claims are in condition for allowance.

Respectfully submitted,

Dated: July 13, 2009

/Marc A. Berger/
Marc A. Berger
Reg. No. 44,029

P.O. Box 691
Soquel, CA 95073
(831) 426-8200

Electronic Acknowledgement Receipt

EFS ID:	5685763
Application Number:	10315250
International Application Number:	
Confirmation Number:	1226
Title of Invention:	User interface
First Named Inventor/Applicant Name:	Magnus Goertz
Customer Number:	75660
Filer:	Marc Aron Berger
Filer Authorized By:	
Attorney Docket Number:	NEONODE.P004
Receipt Date:	13-JUL-2009
Filing Date:	10-DEC-2002
Time Stamp:	11:05:02
Application Type:	Utility under 35 USC 111(a)

Payment information:

Submitted with Payment	no

File Listing:

Document Number	Document Description	File Name	File Size(Bytes)/ Message Digest	Multi Part /.zip	Pages (if appl.)
1		NEONODEP004Amendment_13July2009.pdf	57953 2cf2c071c0360f4d6616db29d510db163751464c	yes	6

	Multipart Description/PDF files in .zip description		
	Document Description	**Start**	**End**
	Amendment/Req. Reconsideration-After Non-Final Reject	1	1
	Claims	2	5
	Applicant Arguments/Remarks Made in an Amendment	6	6
Warnings:			
Information:			
	Total Files Size (in bytes):	57953	

This Acknowledgement Receipt evidences receipt on the noted date by the USPTO of the indicated documents, characterized by the applicant, and including page counts, where applicable. It serves as evidence of receipt similar to a Post Card, as described in MPEP 503.

New Applications Under 35 U.S.C. 111
If a new application is being filed and the application includes the necessary components for a filing date (see 37 CFR 1.53(b)-(d) and MPEP 506), a Filing Receipt (37 CFR 1.54) will be issued in due course and the date shown on this Acknowledgement Receipt will establish the filing date of the application.

National Stage of an International Application under 35 U.S.C. 371
If a timely submission to enter the national stage of an international application is compliant with the conditions of 35 U.S.C. 371 and other applicable requirements a Form PCT/DO/EO/903 indicating acceptance of the application as a national stage submission under 35 U.S.C. 371 will be issued in addition to the Filing Receipt, in due course.

New International Application Filed with the USPTO as a Receiving Office
If a new international application is being filed and the international application includes the necessary components for an international filing date (see PCT Article 11 and MPEP 1810), a Notification of the International Application Number and of the International Filing Date (Form PCT/RO/105) will be issued in due course, subject to prescriptions concerning national security, and the date shown on this Acknowledgement Receipt will establish the international filing date of the application.

UNITED STATES PATENT AND TRADEMARK OFFICE

UNITED STATES DEPARTMENT OF COMMERCE
United States Patent and Trademark Office
Address: COMMISSIONER FOR PATENTS
P.O. Box 1450
Alexandria, Virginia 22313-1450
www.uspto.gov

APPLICATION NO.	FILING DATE	FIRST NAMED INVENTOR	ATTORNEY DOCKET NO.	CONFIRMATION NO.
10/315,250	12/10/2002	Magnus Goertz	NEONODE.P004	1226

75660 7590 07/08/2009

Soquel Group, LLC
P.O. Box 691
Soquel, CA 95073

EXAMINER	
PITARO, RYAN F	
ART UNIT	PAPER NUMBER
2174	

MAIL DATE	DELIVERY MODE
07/08/2009	PAPER

Please find below and/or attached an Office communication concerning this application or proceeding.

The time period for reply, if any, is set in the attached communication.

Office Action Summary	Application No.	Applicant(s)	
	10/315,250	GOERTZ, MAGNUS	
	Examiner	Art Unit	
	RYAN F. PITARO	2174	

-- The MAILING DATE of this communication appears on the cover sheet with the correspondence address --

Period for Reply

A SHORTENED STATUTORY PERIOD FOR REPLY IS SET TO EXPIRE 3 MONTH(S) OR THIRTY (30) DAYS, WHICHEVER IS LONGER, FROM THE MAILING DATE OF THIS COMMUNICATION.

- Extensions of time may be available under the provisions of 37 CFR 1.136(a). In no event, however, may a reply be timely filed after SIX (6) MONTHS from the mailing date of this communication.
- If NO period for reply is specified above, the maximum statutory period will apply and will expire SIX (6) MONTHS from the mailing date of this communication.
- Failure to reply within the set or extended period for reply will, by statute, cause the application to become ABANDONED (35 U.S.C. § 133). Any reply received by the Office later than three months after the mailing date of this communication, even if timely filed, may reduce any earned patent term adjustment. See 37 CFR 1.704(b).

Status

1)☒ Responsive to communication(s) filed on *22 April 2009*.

2a)☐ This action is **FINAL**. 2b)☐ This action is non-final.

3)☐ Since this application is in condition for allowance except for formal matters, prosecution as to the merits is closed in accordance with the practice under *Ex parte Quayle*, 1935 C.D. 11, 453 O.G. 213.

Disposition of Claims

4)☒ Claim(s) *1-16 and 18* is/are pending in the application.

4a) Of the above claim(s) _____ is/are withdrawn from consideration.

5)☐ Claim(s) _____ is/are allowed.

6)☒ Claim(s) *1-16,18* is/are rejected.

7)☐ Claim(s) _____ is/are objected to.

8)☐ Claim(s) _____ are subject to restriction and/or election requirement.

Application Papers

9)☐ The specification is objected to by the Examiner.

10)☐ The drawing(s) filed on _____ is/are: a)☐ accepted or b)☐ objected to by the Examiner.

Applicant may not request that any objection to the drawing(s) be held in abeyance. See 37 CFR 1.85(a).

Replacement drawing sheet(s) including the correction is required if the drawing(s) is objected to. See 37 CFR 1.121(d).

11)☐ The oath or declaration is objected to by the Examiner. Note the attached Office Action or form PTO-152.

Priority under 35 U.S.C. § 119

12)☐ Acknowledgment is made of a claim for foreign priority under 35 U.S.C. § 119(a)-(d) or (f).

a)☐ All b)☐ Some * c)☐ None of:

1.☐ Certified copies of the priority documents have been received.

2.☐ Certified copies of the priority documents have been received in Application No. _____.

3.☐ Copies of the certified copies of the priority documents have been received in this National Stage application from the International Bureau (PCT Rule 17.2(a)).

* See the attached detailed Office action for a list of the certified copies not received.

Attachment(s)

1) ☒ Notice of References Cited (PTO-892)
2) ☐ Notice of Draftsperson's Patent Drawing Review (PTO-948)
3) ☒ Information Disclosure Statement(s) (PTO/SB/08) Paper No(s)/Mail Date *5/4/2009*.
4) ☐ Interview Summary (PTO-413) Paper No(s)/Mail Date. _____ .
5) ☐ Notice of Informal Patent Application
6) ☐ Other: _____.

Response to Amendment

1. This action is in response to the amendment filed 4/22/2009. This action is non-final.

Claim Rejections - 35 USC § 102

2. The following is a quotation of the appropriate paragraphs of 35 U.S.C. 102 that form the basis for the rejections under this section made in this Office action:

> A person shall be entitled to a patent unless –
>
> (e) the invention was described in (1) an application for patent, published under section 122(b), by another filed in the United States before the invention by the applicant for patent or (2) a patent granted on an application for patent by another filed in the United States before the invention by the applicant for patent, except that an international application filed under the treaty defined in section 351(a) shall have the effects for purposes of this subsection of an application filed in the United States only if the international application designated the United States and was published under Article 21(2) of such treaty in the English language.

3. Claim 1 is rejected under 35 U.S.C. 102(e) as being anticipated by Nakajima et al ("Nakajima", 6,346,935).

As per claim 1, Nakajima teaches a computer readable medium storing a computer program with computer program code, which, when read by a mobile handheld computer unit, allows the computer to present a user interface for the mobile handheld computer unit, the user interface comprising: a touch sensitive area in which

representations of a plurality of functions are displayed (Column 15 lines 1-9, *function signs*), and each function of said plurality of functions being mapped to a corresponding location in the touch sensitive area at which the representation of the function is displayed (Column 15 lines 1-9, *stops moving finger*), and being activated by an object touching the corresponding location and then gliding along the touch sensitive area away from the location (Column 15 lines 1-15, *stops moving finger then glides finger to lightly press surface*).

Claim Rejections - 35 USC § 103

4. The following is a quotation of 35 U.S.C. 103(a) which forms the basis for all obviousness rejections set forth in this Office action:

> (a) A patent may not be obtained though the invention is not identically disclosed or described as set forth in section 102 of this title, if the differences between the subject matter sought to be patented and the prior art are such that the subject matter as a whole would have been obvious at the time the invention was made to a person having ordinary skill in the art to which said subject matter pertains. Patentability shall not be negatived by the manner in which the invention was made.

5. Claims 2-11,14-16,18 rejected under 35 U.S.C. 103(a) as being unpatentable over Nakajima et al ("Nakajima", 6,346,935) in view of Rogue ("Rogue", Palm Pilot: The Ultimate Guide, 2nd Edition).

As per claim 2, Nakajima fails to particularly disclose a function to display a plurality of functions. However, Rogue teaches a computer readable medium of claim 1, wherein one function from the plurality of functions, when activated, causes the user interface to display icons representing different services or settings for a currently active application (Figure 1.2-1.3, *Preferences*).Therefore it would have been obvious to an artisan at the time of the invention to combine the teaching of Rogue with the medium of Nakajima. Motivation to do so would have been to provide a way to reduce screen clutter and only access the applications when needed.

As per claim 3, Nakajima-Rogue teaches a computer readable medium of claim 2, wherein the user interface is characterised in, that a selection of a preferred service or setting is done by tapping on a display icon corresponding to the preferred service or setting (Nakajima, Column 18 lines 30-40, tap).

As per claim 4, Nakajima-Rogue teaches a computer readable medium of claim 1, wherein one function from the plurality of functions, when activated, causes the user interface to display a keyboard and a text field (Figure 2.5, power stroke up, Figure 2.6).

As per claim 5, Nakajima-Rogue teaches a wherein said text field is used for inputting and editing of text through said keyboard (Nakajima, Figure 2.6).

As per claim 6, Nakajima-Rogue fails to teach a computer readable medium of claim 1, OFFICIAL NOTICE is taken that file listing is well know in the art. It is extremely common to see a list of functions and files listed, as in directories. Therefore it would have been obvious to an artisan at the time of the invention to combine the teaching with the medium of Nakajima-Rogue. Motivation to do so would have been to provide a user with a list of options.

As per claim 7, Nakajima-Rogue teaches a computer readable medium of claim 6, wherein the user interface is characterised in, that a selection of an application or file is done by gliding the object along said touch sensitive area so that a representation of a desired one of said application or file is highlighted, raising said object from said touch sensitive area, and then tapping on said touch sensitive area (Nakajima, Column 18 lines 40-56).

As per claim 8, Nakajima-Rogue fails to teache presenting only files or only applications. However OFFICIAL NOTICE is taken that file sorting is well know in the art. It is extremely common to sort a list of functions and files listed by data type. Therefore it would have been obvious to an artisan at the time of the invention to combine the teaching with the medium of Nakajima-Rogue. Motivation to do so would have been to provide a user with a specific list of filtered options.

As per claim 9, Nakajima-Rogue teaches a computer readable medium of claim 7, wherein the user interface is characterised in, that, one item in said list is highlighted by a moveable marking, and gliding the object along the touch sensitive area in a direction towards the top of said list or towards the bottom of said list, causes said marking to move in the same direction without scrolling the list (Rogue, Figure 1.4, using the menu).

As per claim 10, Nakajima-Rogue teaches a computer readable medium of claim 9, wherein the user interface is characterised in, that, if the number of applications or files in said list exceeds the number of applications or files that can be presented on said touch sensitive area as content, and if the object is (i) glided along said touch sensitive area to the top or bottom position of said touch sensitive area, then (ii) raised above said touch sensitive area, then (iii) replaced on said touch sensitive area, and then (iv) again glided along said touch sensitive area to the top or bottom of said touch sensitive area, said list navigation pages the content of said list up or down one whole page (Nakajima, Column 14 lines 45-57 and Column 2 lines 15-23, wherein Nakajima is an absolute pointing device and a swipe from the top of the page to the bottom will result in a refresh by a whole page).

As per claim 11, Nakajima-Rogue teaches a computer readable medium of claim 10, wherein the user interface is characterised in, that if the object is raised from any first position on said touch sensitive area and then replaced on any second position on

said touch sensitive area, said navigation can be continued from said second position (Nakajima, Column 14 lines 45-57).

As per claim 14, while Nakajima-Rogue-O'Rourke fails to teach a touch sensitive area is 2-3 inches. OFFICIAL NOTICE is taken that screen sizes vary and screens with a touch sensitive area of 2-3 inches diagonally is well known in the art. Therefore it would have been obvious to an artisan at the time of the invention to combine the screen size with the medium of Nakajima-Rogue. Motivation to do so would have been to provide adequate size to operate the touch screen while keeping it small enough to fit in a pocket.

As per claim 15, Nakajima-Rogue teaches a enclosure adapted to cover the mobile handheld computer unit according to Claim 1, characterised in, that said enclosure is provided with an opening for said touch sensitive area (Rogue, Figure 1.1).

As per claim 16, Nakajima-Rogue fails to teach an enclosure is removable and exchangeable. OFFICIAL NOTICE is taken that an enclosure is removable and exchangeable is well known in the art. Therefore it would have been obvious to an artisan at the time of the invention to combine the exchangeable enclosure with the medium of Nakajima-Rogue. Motivation to do so would have been to provide a way to style your mobile device so that it can be personalized to a user's taste.

As per claim 18, Nakajima-Rogue teaches a computer readable medium according to Claim 1, characterised in, that said computer program product is adapted to function as a shell upon an operations system (Rogue, 1.1 Palm Pilot Basics).

6. Claims 12 and 13 are rejected under 35 U.S.C. 103(a) as being unpatentable over Nakajima et al ("Nakajima", 6,346,935) in view of Rogue ("Rogue", Palm Pilot: The Ultimate Guide, 2nd Edition) in view of O'Rourke (O'Rourke, US 7,225,408).

As per claim 12, Nakajima-Rogue teaches a computer readable medium of claim 1, wherein the user interface is characterized in, that an active application, function, service or setting is moved on one step by gliding the object along the touch sensitive area from left to right (Nakajima, Column 14 lines 45-57). However, Nakajima-Rogue

fails to distinctly point out closing or backing one step. However, O'Rourke teaches that the active application, function, service or setting is closed or backed one step (Figure 13, right and left arrows). Therefore it would have been obvious to an artisan at the time of the invention to combine the glide functionality with the forward and backward functionality of O'Rourke. Motivation to do so would have been to provide an easy way to traverse the GUI.

As per claim 13, Nakajima-Rogue-O'Rourke teaches a computer readable medium of claim 1, wherein the user interface is characterized in, that said representations of said plurality of functions are located at the bottom of said touch sensitive area (O'Rourke, Figure 13, icons at bottom right) .

Response to Arguments

Applicant's arguments filed 4/22/2009 have been fully considered but they are not persuasive.

The Applicant argues the following main points with regards to claim 1. As summarized by the table on page 10 of the amendment, Nakamura differs for the following reasons:

- Glide is over non-touch sensitive portion of screen
- Glide is followed by touch
- Glide is toward touch point
- Glide is along periphery of touch sensitive area
- Glide movement is guided by inner periphery of raised frame
- Only the touch point is process by the user interface
- Frame-guided touch has the same effect as touch alone

The Examiner disagrees; the Applicant has mis-categorized the inner periphery of the frame of Nakajima. The purpose of the frame is to allow the user to more easily glide the finger along the edge of the frame if desired. However, this does not limit the users of Nakajima to only use the edge of the frame as argued by the applicant. The frame of a usual touch tablet interferes with the movement of the user's finger, in other words the effective operational area (the touchable area) of the touch tablet is limited and produces waste of the operational area. So while the Applicant has stated that the glide is over a non-touch sensitive portion of the screen, this is in fact incorrect. The glide can now start at the absolute edge of the screen since there is no frame to restrict the user from the edges of the absolute pointing device. The glide as pointed out in the office action is indeed a touch and glide action (Column 15 lines 1-9), *the users then stops on the sign (icon) of a desired function and the glides the finger*.

This two step action is indicative of both the touch and glide being processed to execute the desired function. Whether or not the frame guided touch has a similar effect as touch alone is erroneous. Like the current application Nakajima eliminates the accidental touch performing a function, hence the reason for the touch then glide. While the two means may produced similar ends each has their advantages and cannot be combined as one.

The Examiner notes that the OFFICIAL NOTICE set forth in the previous office action has not been contested.

Conclusion

Any inquiry concerning this communication or earlier communications from the examiner should be directed to RYAN F. PITARO whose telephone number is (571)272-4071. The examiner can normally be reached on 9:00am - 5:30pm Mondays through Fridays.

If attempts to reach the examiner by telephone are unsuccessful, the examiner's supervisor, Dennis Chow can be reached on 571-272-7767. The fax phone number for the organization where this application or proceeding is assigned is 571-273-8300.

Information regarding the status of an application may be obtained from the Patent Application Information Retrieval (PAIR) system. Status information for published applications may be obtained from either Private PAIR or Public PAIR. Status information for unpublished applications is available through Private PAIR only. For more information about the PAIR system, see http://pair-direct.uspto.gov. Should you have questions on access to the Private PAIR system, contact the Electronic Business Center (EBC) at 866-217-9197 (toll-free). If you would like assistance from a USPTO Customer Service Representative or access to the automated information system, call 800-786-9199 (IN USA OR CANADA) or 571-272-1000.

/Ryan F Pitaro/
Examiner, Art Unit 2174

Notice of References Cited	Application/Control No. 10/315,250	Applicant(s)/Patent Under Reexamination GOERTZ, MAGNUS	
	Examiner RYAN F. PITARO	Art Unit 2174	Page 1 of 1

U.S. PATENT DOCUMENTS

*		Document Number Country Code-Number-Kind Code	Date MM-YYYY	Name	Classification
*	A	US-2005/0035956	02-2005	Sinclair et al.	345/184
	B	US-			
	C	US-			
	D	US-			
	E	US-			
	F	US-			
	G	US-			
	H	US-			
	I	US-			
	J	US-			
	K	US-			
	L	US-			
	M	US-			

FOREIGN PATENT DOCUMENTS

*		Document Number Country Code-Number-Kind Code	Date MM-YYYY	Country	Name	Classification
	N					
	O					
	P					
	Q					
	R					
	S					
	T					

NON-PATENT DOCUMENTS

*		Include as applicable: Author, Title Date, Publisher, Edition or Volume, Pertinent Pages)
	U	
	V	
	W	
	X	

*A copy of this reference is not being furnished with this Office action. (See MPEP § 707.05(a).)
Dates in MM-YYYY format are publication dates. Classifications may be US or foreign.

Index of Claims	Application/Control No.	Applicant(s)/Patent Under Reexamination
	10315250	GOERTZ, MAGNUS
	Examiner	Art Unit
	Ryan F Pitaro	2174

✓	Rejected	-	Cancelled	N	Non-Elected	A	Appeal
=	Allowed	÷	Restricted	I	Interference	O	Objected

☐ Claims renumbered in the same order as presented by applicant ☐ CPA ☐ T.D. ☐ R.1.47

CLAIM		DATE								
Final	Original	11/09/2007	06/23/2008	12/21/2008	07/06/2009					
	1	✓	✓	✓	✓					
	2	✓	✓	✓	✓					
	3	✓	✓	✓	✓					
	4	✓	✓	✓	✓					
	5	✓	✓	✓	✓					
	6	✓	✓	✓	✓					
	7	✓	✓	✓	✓					
	8	✓	✓	✓	✓					
	9	✓	✓	✓	✓					
	10	✓	✓	✓	✓					
	11	✓	✓	✓	✓					
	12	✓	✓	✓	✓					
	13	✓	✓	✓	✓					
	14	✓	✓	✓	✓					
	15	✓	✓	✓	✓					
	16	✓	✓	✓	✓					
	17	✓	✓	✓	-					
	18	✓	✓	✓	✓					
	19		÷	N	-					
	20		÷	N	-					
	21		÷	N	-					
	22		÷	N	-					
	23		÷	N	-					
	24		÷	N	-					
	25		÷	N	-					
	26		÷	N	-					
	27		÷	N	-					
	28		÷	N	-					
	29		÷	N	-					
	30		÷	N	-					
	31		÷	N	-					
	32		÷	N	-					
	33		÷	N	-					
	34		÷	N	-					
	35		÷	N	-					
	36		÷	N	-					

Index of Claims	Application/Control No.	Applicant(s)/Patent Under Reexamination
	10315250	GOERTZ, MAGNUS
	Examiner	Art Unit
	Ryan F Pitaro	2174

✓	Rejected	-	Cancelled	N	Non-Elected	A	Appeal
=	Allowed	÷	Restricted	I	Interference	O	Objected

☐ Claims renumbered in the same order as presented by applicant ☐ CPA ☐ T.D. ☐ R.1.47

CLAIM		DATE								
Final	Original	11/09/2007	06/23/2008	12/21/2008	07/06/2009					
	37		÷	N	-					
	38		÷	N	-					
	39		÷	N	-					
	40		÷	N	-					
	41		÷	N	-					
	42		÷	N	-					
	43		÷	N	-					
	44		÷	N	-					
	45		÷	N	-					
	46		÷	N	-					
	47		÷	N	-					
	48									
	49									
	50									
	51									
	52									
	53									
	54									
	55									
	56									
	57									
	58									
	59									
	60									
	61									
	62									
	63									
	64									
	65									

Search Notes	Application/Control No.	Applicant(s)/Patent Under Reexamination
	10315250	GOERTZ, MAGNUS
	Examiner	Art Unit
	Ryan F Pitaro	2174

SEARCHED			
Class	Subclass	Date	Examiner
Update	Search	11/8/2007	RFP
Update	Search	6/17/2008	RFP
Update	Search	12/21/2008	RFP
Update	Search	4/22/2009	RFP

SEARCH NOTES		
Search Notes	Date	Examiner
Update Search	11/8/2007	RFP
Update Search	6/17/2008	RFP
EAST	12/21/2008	RFP
Internet	12/21/2008	RFP
Safari Online Books	12/21/2008	RFP
IEEE	12/21/2008	RFP
ACM	12/21/2008	RFP
Update Search	4/22/2009	RFP

INTERFERENCE SEARCH			
Class	Subclass	Date	Examiner

EAST Search History

Ref #	Hits	Search Query	DBs	Default Operator	Plurals	Time Stamp
L1	2	"6346935".pn.	US-PGPUB; USPAT; EPO; JPO; DERWENT	OR	ON	2009/07/06 10:24
L2	187	files with applications with list with only	US-PGPUB; USPAT; EPO; JPO; DERWENT	OR	ON	2009/07/06 10:28
L3	98	(file near list) with (application near list)	US-PGPUB; USPAT; EPO; JPO; DERWENT	OR	ON	2009/07/06 10:34
L4	502	(file near view) with application	US-PGPUB; USPAT; EPO; JPO; DERWENT	OR	ON	2009/07/06 10:36
L5	15	sort with application near files	US-PGPUB; USPAT; EPO; JPO; DERWENT	OR	ON	2009/07/06 11:14
L6	613	(programs application) with files with (sort show list) with only	US-PGPUB; USPAT; EPO; JPO; DERWENT	OR	ON	2009/07/06 11:18
L7	55	(programs application) with files with (sort show list) with only and "715"/$.ccls.	US-PGPUB; USPAT; EPO; JPO; DERWENT	OR	ON	2009/07/06 11:18

L8	0	seperate with list with data near type	US-PGPUB; USPAT; EPO; JPO; DERWENT	OR	ON	2009/07/06 11:19
L9	5796	list with data near type	US-PGPUB; USPAT; EPO; JPO; DERWENT	OR	ON	2009/07/06 11:19
L10	652	list with data near type and "715"/$.ccls.	US-PGPUB; USPAT; EPO; JPO; DERWENT	OR	ON	2009/07/06 11:19
L11	596	application near list and file near list	US-PGPUB; USPAT; EPO; JPO; DERWENT	OR	ON	2009/07/06 11:20
L12	271	application near list and file near list and @ay<="2002"	US-PGPUB; USPAT; EPO; JPO; DERWENT	OR	ON	2009/07/06 11:22
S1	2	"7441196".pn.	US-PGPUB; USPAT; EPO; JPO; DERWENT	OR	OFF	2008/12/08 17:03
S2	394	swipe with screen	US-PGPUB; USPAT; EPO; JPO; DERWENT	OR	ON	2008/12/08 17:05
S3	606	(glide swipe) with screen	US-PGPUB; USPAT; EPO; JPO; DERWENT	OR	ON	2008/12/08 17:05

S4	2	"7286063".pn.	US-PGPUB; USPAT; EPO; JPO; DERWENT	OR	ON	2008/12/08 17:10
S5	263	("20010003845" | "20010012286" | "20010016947" | "20010034647" | "20010042002" | "20010044751" | "20010049824" | "20010051903" | "20020007309" | "20020010642" | "20020016750" | "20020029339" | "20020032782" | "20020035174" | "20020038256" | "20020038259" | "20020042914" | "20020042921" | "20020049631" | "20020056098" | "20020059590" | "20020067376" | "20020077177" | "20020078006" | "20020078453" | "20020098834" | "20020116292" | "20020116320" | "20020166122" | "20030046182" | "20030074661" | "20030095525" | "20030126607" | "20030140017" | "20030146940" | "20030149628" | "20030182195" | "20040003412" | "20040098747" | "20040103439" | "20040117831" | "20040128137" | "20040133848" | "20040148625" | "20040204116" | "20040210824" | "20040260689" | "20050010949" | "20050025550" | "20050075932" | "20050086690" | "20050091118" | "20050160458" | "20050234895" | "20050246231" | "20060155598" | "20060224987" | "20070008332" | "3586771" | "4650977" | "4706121" | "4992940" | "5041312" | "5064999" | "5119188" | "5236199" | "5321749" | "5353016" | "5410326" | "5479268" | "5532735" | "5553242" | "5559548" | "5598523" | "5602596" | "5617570" | "5625781" | "5710887" | "5727129" | "5734719" | "5758126" | "5794210" | "5796252" | "5801702" | "5809204" | "5819220" | "5822014" | "5828839" | "5832208" | "5832459" | "5838314" | "5848396" | "5851149" | "5874906" | "5878222" | "5890175" | "5893064" | "5895454" | "5896133" | "5900905" | "5902353" | "5903729" | "5911145" | "5918014" | "5918213").PN. OR ("5925103" | "5931901" | "5935002" | "5946381" | "5956681" | "5956693" | "5958012" | "5960411" | "5961593" | "5978381" | "5990927" | "6002853" |	US-PGPUB; USPAT; USOCR	OR	OFF	2008/12/08 17:12

		"6005562" | "6005631" | "6006257" | "6012049" | "6014502" | "6018372" | "6025837" | "6028600" | "6031537" | "6041312" | "6054989" | "6072483" | "6072492" | "6075575" | "6078866" | "6091417" | "6094156" | "6101473" | "6112186" | "6129274" | "6138107" | "6142371" | "6151050" | "6151059" | "6151596" | "6151630" | "6154205" | "6160552" | "6167382" | "6172677" | "6177936" | "6193152" | "6198481" | "6199050" | "6199077" | "6199098" | "6205432" | "6205582" | "6211878" | "6212265" | "6223215" | "6226623" | "6226642" | "6229540" | "6237030" | "6243093" | "6253189" | "6260192" | "6266060" | "6269343" | "6269361" | "6269403" | "6271832" | "6282516" | "6285357" | "6285987" | "6286017" | "6286043" | "6288716" | "6292779" | "6292782" | "6292786" | "6292809" | "6295057" | "6298330" | "6300947" | "6301566" | "6312336" | "6314406" | "6317706" | "6330005" | "6330543" | "6333753" | "6334108" | "6334145" | "6336131" | "6337715" | "6345279" | "6356905" | "6381583" | "6388714" | "6396531" | "6397387" | "6401132" | "6407779" | "6411307" | "6411337" | "6415270" | "6417873" | "6418441" | "6421066" | "6421071" | "6421724" | "6438540" | "6445398" | "6460181" | "6476825" | "6477575" | "6484149" | "6487189" | "6487586" | "6490555" | "6509913" | "6516311" | "6522342" | "6532312" | "6535888" | "6570582" | "6571279" | "6583800" | "6606103" | "6606280" | "6606347").PN. OR ("6608633" | "6615247" | "6615248" | "6618039" | "6631523" | "6636246" | "6647373" | "6662224" | "6680714" | "6684062" | "6692358" | "6704727" | "6711552" | "6714534" | "6728731" | "6769989" | "6804786" | "6826572" | "6829646" | "6857102" | "6868525" | "6907556" | "6925595" | "6928610" | "6938073" | "6973669" | "6978263" | "7013435" | "7020845" | "7051281" | "7174512" | "7293276" | "7383515").PN.			

S6	112	touch with slide with function	US-PGPUB; USPAT; USOCR	OR	ON	2008/12/08 17:14
S7	13	("4366475" | "4686332" | "4821030" | "4914624" | "5402151" | "5563632" | "5596346" | "5638060" | "5687331" | "5736974" | "5736976" | "5761485" | "5838973").PN.	US-PGPUB; USPAT; USOCR	OR	OFF	2008/12/08 17:18
S8	168267	object near3 type	US-PGPUB; USPAT; USOCR	OR	OFF	2008/12/08 17:21
S9	5	(file item object) near3 type with open near3 respective	US-PGPUB; USPAT; USOCR	OR	OFF	2008/12/08 17:21
S10	905	open$3 with different with program	US-PGPUB; USPAT; USOCR	OR	OFF	2008/12/08 17:23
S11	2	multiple near3 file near3 selection with open	US-PGPUB; USPAT; USOCR	OR	ON	2008/12/08 17:29
S12	11	applying with command with (plurality multiple) with files	US-PGPUB; USPAT; USOCR	OR	ON	2008/12/08 17:29
S13	29188	(flick stroke) with (open application command)	US-PGPUB; USPAT; EPO; JPO; DERWENT	OR	OFF	2008/12/10 16:52
S14	229	(flick) with (open application command)	US-PGPUB; USPAT; EPO; JPO; DERWENT	OR	ON	2008/12/10 16:54
S15	127	(flick) with (open application command) and @ay<="2002"	US-PGPUB; USPAT; EPO; JPO; DERWENT	OR	ON	2008/12/10 16:56
S16	5	(flick) with (open application command) and @ay<="2002" and "715"/$.ccls.	US-PGPUB; USPAT; EPO; JPO; DERWENT	OR	ON	2008/12/10 16:56

S17	39	(flick) and @ay<="2002" and "715"/$.ccls.	US-PGPUB; USPAT; EPO; JPO; DERWENT	OR	ON	2008/12/10 16:57
S18	961	(flick gesture) and @ay<="2002" and "715"/$.ccls.	US-PGPUB; USPAT; EPO; JPO; DERWENT	OR	ON	2008/12/10 16:58
S19	2324	(flick gesture slide) and @ay<="2002" and "715"/$.ccls.	US-PGPUB; USPAT; EPO; JPO; DERWENT	OR	ON	2008/12/10 16:58
S20	77	(flick gesture slide) and @ay<="2002" and "715"/702,864.ccls.	US-PGPUB; USPAT; EPO; JPO; DERWENT	OR	ON	2008/12/10 16:59
S21	6585	finger near3 (flick gesture slide) and @ay<="2002"	US-PGPUB; USPAT; EPO; JPO; DERWENT	OR	ON	2008/12/10 17:07
S22	86	finger near3 (flick gesture slide) and @ay<="2002" and "715"/$.ccls.	US-PGPUB; USPAT; EPO; JPO; DERWENT	OR	ON	2008/12/10 17:07
S23	0	"5543591,5943052,5907327,4686332".pn.	US-PGPUB; USPAT; EPO; JPO; DERWENT	OR	ON	2008/12/10 17:14
S24	8	("5543591" "5943052" "5907327" "4686332").pn.	US-PGPUB; USPAT; EPO; JPO; DERWENT	OR	ON	2008/12/10 17:15

S25	93647	(glide flick touch swipe) with screen	US-PGPUB; USPAT; EPO; JPO; DERWENT	OR	ON	2008/12/17 13:18
S26	13098	(glide flick touch swipe) with screen with (applications functions)	US-PGPUB; USPAT; EPO; JPO; DERWENT	OR	ON	2008/12/17 13:20
S27	88	(glide flick touch swipe) with screen with (applications functions) and "715"/$.ccls. and @AY="2002"	US-PGPUB; USPAT; EPO; JPO; DERWENT	OR	ON	2008/12/17 13:20
S28	430	(glide flick touch swipe) with screen with (applications functions) and "715"/$.ccls. and @AY<="2002"	US-PGPUB; USPAT; EPO; JPO; DERWENT	OR	ON	2008/12/17 13:20
S29	0	(glide flick swipe) with screen with (applications functions) and "715"/$.ccls. and @AY<="2002"	US-PGPUB; USPAT; EPO; JPO; DERWENT	OR	ON	2008/12/17 13:21
S30	11	(glide flick swipe) with screen and "715"/$.ccls. and @AY<="2002"	US-PGPUB; USPAT; EPO; JPO; DERWENT	OR	ON	2008/12/17 13:21
S31	219	(glide flick gesture swipe) with screen and "715"/$.ccls. and @AY<="2002"	US-PGPUB; USPAT; EPO; JPO; DERWENT	OR	ON	2008/12/17 13:22
S32	299	(glide flick swipe) with screen and @AY<="2002"	US-PGPUB; USPAT; EPO; JPO; DERWENT	OR	ON	2008/12/17 13:25

S33	8	(glide flick swipe) with screen with icon and @AY<="2002"	US-PGPUB; USPAT; EPO; JPO; DERWENT	OR	ON	2008/12/17 13:26
S34	16	("20010011308" | "20030142138" | "20040034801" | "20050253817" | "20050253817" | "20050264833" | "5821933" | "5907327" | "6633310").PN.	US-PGPUB; USPAT; EPO; JPO; DERWENT	OR	ON	2008/12/17 13:30
S35	451	(glide flick swipe) with finger and @AY<="2002"	US-PGPUB; USPAT; EPO; JPO; DERWENT	OR	ON	2008/12/17 13:32
S36	3	(glide flick swipe) with finger and @AY<="2002" and "715"/$.ccls.	US-PGPUB; USPAT; EPO; JPO; DERWENT	OR	ON	2008/12/17 13:32
S37	13	("5250929" | "5568604" | "5579036" | "5612719" | "5661476" | "5748185" | "5767457" | "5883617" | "5928304" | "5943043" | "5943044" | "5995083" | "6049328").PN.	US-PGPUB; USPAT; USOCR	OR	OFF	2008/12/17 14:01
S38	918	715/716.ccls.	US-PGPUB; USPAT; USOCR	OR	OFF	2008/12/17 15:38
S39	7	715/716.ccls. and dvd near menu	US-PGPUB; USPAT; USOCR	OR	OFF	2008/12/17 15:38
S40	9	715/716.ccls. and dvd near menu	US-PGPUB; USPAT; USOCR	OR	ON	2008/12/17 15:38
S41	334	715/716.ccls. and dvd	US-PGPUB; USPAT; USOCR	OR	ON	2008/12/17 15:47
S42	461	715/716.ccls. and menu	US-PGPUB; USPAT; USOCR	OR	ON	2008/12/17 15:47
S43	39	715/716.ccls. and menu and theme	US-PGPUB; USPAT; USOCR	OR	ON	2008/12/17 15:48
S44	243	715/716.ccls. and menu and effects	US-PGPUB; USPAT; USOCR	OR	ON	2008/12/17 15:52

S45	4	715/716.ccls. and menu with theme	US-PGPUB; USPAT; USOCR	OR	ON	2008/12/17 15:53
S46	1	"7200836".pn.	US-PGPUB; USPAT; USOCR	OR	ON	2008/12/17 15:56
S47	1	"20080120546".pn.	US-PGPUB; USPAT; USOCR	OR	ON	2008/12/17 15:57
S48	433	715/864.ccls.	US-PGPUB; USPAT; USOCR	OR	ON	2008/12/21 23:26
S49	60	715/864.ccls. and keyboard and back and icons and files	US-PGPUB; USPAT; USOCR	OR	ON	2008/12/21 23:27
S50	25	715/864.ccls. and keyboard and back and icons and files and removable	US-PGPUB; USPAT; USOCR	OR	ON	2008/12/21 23:27
S51	42	715/864.ccls. and keyboard and icons and files and @ay<="2002"	US-PGPUB; USPAT; USOCR	OR	ON	2008/12/21 23:28
S52	2	"6346935".pn.	US-PGPUB; USPAT; EPO; JPO; DERWENT	OR	OFF	2009/07/05 14:20
S53	21	(glide flick touch swipe) with (coordinat$7) with screen with (applications functions) and "715"/$.ccls. and @AY<="2002"	US-PGPUB; USPAT; EPO; JPO; DERWENT	OR	ON	2009/07/05 14:24
S54	437	(touch finger) with (glide flick touch swipe) with screen with (applications functions) and "715"/$.ccls. and @AY<="2002"	US-PGPUB; USPAT; EPO; JPO; DERWENT	OR	ON	2009/07/05 14:26
S55	0	(touch finger) with (glide flick swipe) with screen with (applications functions) and "715"/$.ccls. and @AY<="2002"	US-PGPUB; USPAT; EPO; JPO; DERWENT	OR	ON	2009/07/05 14:26
S56	3	(touch finger) with (glide flick swipe) with screen and "715"/$.ccls. and @AY<="2002"	US-PGPUB; USPAT; EPO; JPO; DERWENT	OR	ON	2009/07/05 14:27

S57	2	"6140936".pn.	US-PGPUB; USPAT; EPO; JPO; DERWENT	OR	ON	2009/07/05 23:13

7/6/09 11:45:24 AM
C:\Documents and Settings\RPitaro\My Documents\EAST\Workspaces\10315250.wsp

Doc code: IDS
Doc description: Information Disclosure Statement (IDS) Filed

PTO/SB/08a (04-09)
Approved for use through 05/31/2009. OMB 0651-0031
U.S. Patent and Trademark Office; U.S. DEPARTMENT OF COMMERCE
Under the Paperwork Reduction Act of 1995, no persons are required to respond to a collection of information unless it contains a valid OMB control number.

INFORMATION DISCLOSURE STATEMENT BY APPLICANT (**Not for submission under 37 CFR 1.99)**		
	Application Number	10315250
	Filing Date	2002-12-10
	First Named Inventor	Magnus Goertz
	Art Unit	2174
	Examiner Name	Ryan F. Pitaro
	Attorney Docket Number	NEONODE.P004

U.S.PATENTS							Remove
Examiner Initial*	Cite No	Patent Number	Kind Code[1]	Issue Date	Name of Patentee or Applicant of cited Document	Pages,Columns,Lines where Relevant Passages or Relevant Figures Appear	
	1						
If you wish to add additional U.S. Patent citation information please click the Add button.							Add

U.S.PATENT APPLICATION PUBLICATIONS							Remove
Examiner Initial*	Cite No	Publication Number	Kind Code[1]	Publication Date	Name of Patentee or Applicant of cited Document	Pages,Columns,Lines where Relevant Passages or Relevant Figures Appear	
	1						
If you wish to add additional U.S. Published Application citation information please click the Add button.							Add

FOREIGN PATENT DOCUMENTS								Remove
Examiner Initial*	Cite No	Foreign Document Number[3]	Country Code[2] i	Kind Code[4]	Publication Date	Name of Patentee or Applicant of cited Document	Pages,Columns,Lines where Relevant Passages or Relevant Figures Appear	T[5]
/R.P./	1	0 330 767	EP	B1	1993-10-06	PIONEER ELECTRONIC CORPORATION		☐
If you wish to add additional Foreign Patent Document citation information please click the Add button								Add

NON-PATENT LITERATURE DOCUMENTS			Remove
Examiner Initials*	Cite No	Include name of the author (in CAPITAL LETTERS), title of the article (when appropriate), title of the item (book, magazine, journal, serial, symposium, catalog, etc), date, pages(s), volume-issue number(s), publisher, city and/or country where published.	T[5]

INFORMATION DISCLOSURE STATEMENT BY APPLICANT (**Not for submission under 37 CFR 1.99)**		
	Application Number	10315250
	Filing Date	2002-12-10
	First Named Inventor	Magnus Goertz
	Art Unit	2174
	Examiner Name	Ryan F. Pitaro
	Attorney Docket Number	NEONODE.P004

	1		☐

If you wish to add additional non-patent literature document citation information please click the Add button **Add**

EXAMINER SIGNATURE

Examiner Signature	/Ryan Pitaro/	Date Considered	07/06/2009

*EXAMINER: Initial if reference considered, whether or not citation is in conformance with MPEP 609. Draw line through a citation if not in conformance and not considered. Include copy of this form with next communication to applicant.

[1] See Kind Codes of USPTO Patent Documents at www.USPTO.GOV or MPEP 901.04. [2] Enter office that issued the document, by the two-letter code (WIPO Standard ST.3). [3] For Japanese patent documents, the indication of the year of the reign of the Emperor must precede the serial number of the patent document. [4] Kind of document by the appropriate symbols as indicated on the document under WIPO Standard ST.16 if possible. [5] Applicant is to place a check mark here if English language translation is attached.

PTO/SB/08a (04-09)
Approved for use through 05/31/2009. OMB 0651-0031
U.S. Patent and Trademark Office; U.S. DEPARTMENT OF COMMERCE

Under the Paperwork Reduction Act of 1995, no persons are required to respond to a collection of information unless it contains a valid OMB control number.

INFORMATION DISCLOSURE STATEMENT BY APPLICANT (**Not for submission under 37 CFR 1.99)**		
	Application Number	10315250
	Filing Date	2002-12-10
	First Named Inventor	Magnus Goertz
	Art Unit	2174
	Examiner Name	Ryan F. Pitaro
	Attorney Docket Number	NEONODE.P004

U.S.PATENTS						Remove
Examiner Initial*	Cite No	Patent Number	Kind Code[1]	Issue Date	Name of Patentee or Applicant of cited Document	Pages,Columns,Lines where Relevant Passages or Relevant Figures Appear
	1					
If you wish to add additional U.S. Patent citation information please click the Add button.						Add

U.S.PATENT APPLICATION PUBLICATIONS						Remove
Examiner Initial*	Cite No	Publication Number	Kind Code[1]	Publication Date	Name of Patentee or Applicant of cited Document	Pages,Columns,Lines where Relevant Passages or Relevant Figures Appear
	1					
If you wish to add additional U.S. Published Application citation information please click the Add button.						Add

FOREIGN PATENT DOCUMENTS								Remove
Examiner Initial*	Cite No	Foreign Document Number[3]	Country Code[2] ¡	Kind Code[4]	Publication Date	Name of Patentee or Applicant of cited Document	Pages,Columns,Lines where Relevant Passages or Relevant Figures Appear	T[5]
	1	0 330 767	EP	B1	1993-10-06	PIONEER ELECTRONIC CORPORATION		☐
If you wish to add additional Foreign Patent Document citation information please click the Add button								Add

NON-PATENT LITERATURE DOCUMENTS			Remove
Examiner Initials*	Cite No	Include name of the author (in CAPITAL LETTERS), title of the article (when appropriate), title of the item (book, magazine, journal, serial, symposium, catalog, etc), date, pages(s), volume-issue number(s), publisher, city and/or country where published.	T[5]

INFORMATION DISCLOSURE STATEMENT BY APPLICANT (**Not for submission under 37 CFR 1.99)**		
	Application Number	10315250
	Filing Date	2002-12-10
	First Named Inventor	Magnus Goertz
	Art Unit	2174
	Examiner Name	Ryan F. Pitaro
	Attorney Docket Number	NEONODE.P004

	1		☐

If you wish to add additional non-patent literature document citation information please click the Add button Add

EXAMINER SIGNATURE

Examiner Signature		Date Considered	

*EXAMINER: Initial if reference considered, whether or not citation is in conformance with MPEP 609. Draw line through a citation if not in conformance and not considered. Include copy of this form with next communication to applicant.

[1] See Kind Codes of USPTO Patent Documents at www.USPTO.GOV or MPEP 901.04. [2] Enter office that issued the document, by the two-letter code (WIPO Standard ST.3). [3] For Japanese patent documents, the indication of the year of the reign of the Emperor must precede the serial number of the patent document. [4] Kind of document by the appropriate symbols as indicated on the document under WIPO Standard ST.16 if possible. [5] Applicant is to place a check mark here if English language translation is attached.

INFORMATION DISCLOSURE STATEMENT BY APPLICANT (Not for submission under 37 CFR 1.99)		
	Application Number	10315250
	Filing Date	2002-12-10
	First Named Inventor	Magnus Goertz
	Art Unit	2174
	Examiner Name	Ryan F. Pitaro
	Attorney Docket Number	NEONODE.P004

CERTIFICATION STATEMENT

Please see 37 CFR 1.97 and 1.98 to make the appropriate selection(s):

☐ That each item of information contained in the information disclosure statement was first cited in any communication from a foreign patent office in a counterpart foreign application not more than three months prior to the filing of the information disclosure statement. See 37 CFR 1.97(e)(1).

OR

☐ That no item of information contained in the information disclosure statement was cited in a communication from a foreign patent office in a counterpart foreign application, and, to the knowledge of the person signing the certification after making reasonable inquiry, no item of information contained in the information disclosure statement was known to any individual designated in 37 CFR 1.56(c) more than three months prior to the filing of the information disclosure statement. See 37 CFR 1.97(e)(2).

☐ See attached certification statement.

☒ Fee set forth in 37 CFR 1.17 (p) has been submitted herewith.

☐ None

SIGNATURE

A signature of the applicant or representative is required in accordance with CFR 1.33, 10.18. Please see CFR 1.4(d) for the form of the signature.

Signature	/Marc A. Berger/	Date (YYYY-MM-DD)	2009-05-04
Name/Print	Marc A. Berger	Registration Number	44029

This collection of information is required by 37 CFR 1.97 and 1.98. The information is required to obtain or retain a benefit by the public which is to file (and by the USPTO to process) an application. Confidentiality is governed by 35 U.S.C. 122 and 37 CFR 1.14. This collection is estimated to take 1 hour to complete, including gathering, preparing and submitting the completed application form to the USPTO. Time will vary depending upon the individual case. Any comments on the amount of time you require to complete this form and/or suggestions for reducing this burden, should be sent to the Chief Information Officer, U.S. Patent and Trademark Office, U.S. Department of Commerce, P.O. Box 1450, Alexandria, VA 22313-1450. DO NOT SEND FEES OR COMPLETED FORMS TO THIS ADDRESS. **SEND TO: Commissioner for Patents, P.O. Box 1450, Alexandria, VA 22313-1450.**

Privacy Act Statement

The Privacy Act of 1974 (P.L. 93-579) requires that you be given certain information in connection with your submission of the attached form related to a patent application or patent. Accordingly, pursuant to the requirements of the Act, please be advised that: (1) the general authority for the collection of this information is 35 U.S.C. 2(b)(2); (2) furnishing of the information solicited is voluntary; and (3) the principal purpose for which the information is used by the U.S. Patent and Trademark Office is to process and/or examine your submission related to a patent application or patent. If you do not furnish the requested information, the U.S. Patent and Trademark Office may not be able to process and/or examine your submission, which may result in termination of proceedings or abandonment of the application or expiration of the patent.

The information provided by you in this form will be subject to the following routine uses:

1. The information on this form will be treated confidentially to the extent allowed under the Freedom of Information Act (5 U.S.C. 552) and the Privacy Act (5 U.S.C. 552a). Records from this system of records may be disclosed to the Department of Justice to determine whether the Freedom of Information Act requires disclosure of these record s.

2. A record from this system of records may be disclosed, as a routine use, in the course of presenting evidence to a court, magistrate, or administrative tribunal, including disclosures to opposing counsel in the course of settlement negotiations.

3. A record in this system of records may be disclosed, as a routine use, to a Member of Congress submitting a request involving an individual, to whom the record pertains, when the individual has requested assistance from the Member with respect to the subject matter of the record.

4. A record in this system of records may be disclosed, as a routine use, to a contractor of the Agency having need for the information in order to perform a contract. Recipients of information shall be required to comply with the requirements of the Privacy Act of 1974, as amended, pursuant to 5 U.S.C. 552a(m).

5. A record related to an International Application filed under the Patent Cooperation Treaty in this system of records may be disclosed, as a routine use, to the International Bureau of the World Intellectual Property Organization, pursuant to the Patent Cooperation Treaty.

6. A record in this system of records may be disclosed, as a routine use, to another federal agency for purposes of National Security review (35 U.S.C. 181) and for review pursuant to the Atomic Energy Act (42 U.S.C. 218(c)).

7. A record from this system of records may be disclosed, as a routine use, to the Administrator, General Services, or his/her designee, during an inspection of records conducted by GSA as part of that agency's responsibility to recommend improvements in records management practices and programs, under authority of 44 U.S.C. 2904 and 2906. Such disclosure shall be made in accordance with the GSA regulations governing inspection of records for this purpose, and any other relevant (i.e., GSA or Commerce) directive. Such disclosure shall not be used to make determinations about individuals.

8. A record from this system of records may be disclosed, as a routine use, to the public after either publication of the application pursuant to 35 U.S.C. 122(b) or issuance of a patent pursuant to 35 U.S.C. 151. Further, a record may be disclosed, subject to the limitations of 37 CFR 1.14, as a routine use, to the public if the record was filed in an application which became abandoned or in which the proceedings were terminated and which application is referenced by either a published application, an application open to public inspections or an issued patent.

9. A record from this system of records may be disclosed, as a routine use, to a Federal, State, or local law enforcement agency, if the USPTO becomes aware of a violation or potential violation of law or regulation.

(19) Europäisches Patentamt
European Patent Office
Office européen des brevets

(11) Publication number: **0 330 767 B1**

(12) # EUROPEAN PATENT SPECIFICATION

(45) Date of publication of patent specification: **06.10.93** (51) Int. Cl.[5]: **G06K 11/08**

(21) Application number: **88301738.6**

(22) Date of filing: **29.02.88**

(54) **Touch panel control device with touch time and finger direction discrimination.**

(43) Date of publication of application:
06.09.89 Bulletin 89/36

(45) Publication of the grant of the patent:
06.10.93 Bulletin 93/40

(84) Designated Contracting States:
DE FR GB

(56) References cited:
EP-A- 0 150 904
WO-A-85/05477

IBM TECHNICAL DISCLOSURE BULLETIN, vol. 20, no. 4, September 1977, pages 1609-1611, New York, US; T.F. CUMMINGS: "Transparent keyless keyboard for variable terminal applications"

(73) Proprietor: **PIONEER ELECTRONIC CORPORATION**
No. 4-1, Meguro 1-chome
Meguro-ku Tokyo 153(JP)

(72) Inventor: **Araki, Morio Pioneer Elec. Corp.**
Kawagoe Works
No. 25-1, Aza Nishimachi
Oaza Yamada
Kawagoe-shi Saitama(JP)

Inventor: **Mori, Shigeto Pioneer Elec. Corp.**
Kawagoe Works
No. 25-1, Aza Nishimachi
Oaza Yamada
Kawagoe-shi Saitama(JP)

Inventor: **Kaneko, Michihiro Pioneer Elec. Corp. Kawagoe Work**
No. 25-1, Aza Nishimachi
Oaza Yamada
Kawagoe-shi Saitama(JP)

Inventor: **Go, Yasunao Pioneer Elec. Corp.**
Kawagoe Works
No. 25-1, Aza Nishimachi
Oaza Yamada
Kawagoe-shi Saitama(JP)

(74) Representative: **Brunner, Michael John et al**
GILL JENNINGS & EVERY,
Broadgate House,
7 Eldon Street
London EC2M 7LH (GB)

Note: Within nine months from the publication of the mention of the grant of the European patent, any person may give notice to the European Patent Office of opposition to the European patent granted. Notice of opposition shall be filed in a written reasoned statement. It shall not be deemed to have been filed until the opposition fee has been paid (Art. 99(1) European patent convention).

Rank Xerox (UK) Business Services
(3.10/3.6/3.3.1)

EP 0 330 767 B1

Description

The invention relates to a touch panel control device for acoustic equipment.

Acoustic entertainment devices for vehicles, such as a cassette tape player, compact disk player and radio tuner are installed in considerably small space such as an in-dash console, and therefore must be small in size. Accordingly, the switches or push-buttons of the acoustic devices must also be small. These small switches or push-buttons are difficult to operate. Furthermore, the acoustic devices are used in different modes and operated in various manners. Therefore they employ a variety of switches, push-buttons, etc. Since the operator cannot easily locate them while driving, his attention to the road may be distracted when operating the acoustic devices causing a dangerous condition.

In this connection, a method has been disclosed in unexamined published Japanese Patent Application no. JP-A-61089720 in which, instead of switches or push-buttons for operating acoustic devices, there is provided a touch panel, the different controls of the devices being effected by touching different positions on the touch panel.

The conventional touch panel method will be described with reference to Figure 1. A touch panel 80 having interior detecting electrodes is scanned with a scanner 20 to detect when and at what point the touch panel 80 has been touched. The detection output data of the scanner 20 is applied to a first memory 30, where the detection output data of a scan is temporarily stored. The detection output data of one scan read out of the first memory 30 is supplied to a recognizing block 40. A touch on the touch panel is pattern-recognized by the recognizing block 40 for each scan of the scanner 20.

The output pattern data of the recognizing block 40 is applied to a second memory 50 and a data comparator 60. The second memory 50 temporarily stores the recognized pattern data produced during one scan and supplied thereto from the recognizing block 40. The data comparator 60 compares the output pattern data of the recognising block with the pattern data of the preceding scan read out of the second memory 50, to thereby detect any change in the pattern data. The comparison output data of the data comparator 60 is supplied to a decision block 70 which outputs control data corresponding to the comparison output data. In response to the comparison output data, the decision block 70 refers to a data table (not shown) and outputs predetermined control data according to the touch on the touch panel 80. A similar system is shown and described in WO-A-8505477 and the present invention is characterised thereover.

As is apparent from the above description, in the conventional touch panel control device, the touch data of the present scan is merely compared with that of the preceding scan. Therefore, if the scanning speed is increased, the control device may judge no change in the touch position between two successive scans because the distance the finger can move over a scanning period is related to the scanning speed. If, on the other hand, the scanning speed is decreased, the following error may be encountered. If a finger finely touches and is removed from the panel and the part of the panel touched has not yet been scanned (for instance the right part of the panel in the case of scanning the panel in the left-to-right direction), then that touch on the panel may not be detected.

Preferably, the entire panel surface should be scanned in about 10ms to prevent a detection miss. However. if the scanning speed is set to about 10ms, there may be an erroneous detection because, as mentioned above, finger speed cannot follow a rapid scanning speed.

Accordingly, an object of this invention is to eliminate the above-described difficulties with a conventional touch panel control device.

According to the invention there is provided a touch panel control device for outputting commands, according to how a finger touches a touch panel, the device comprising

touch position detecting means in a matrix form on said touch panel, for detecting a touch on the touch panel and providing output signals;

means for detecting the co-ordinates of the touch position from the said output signals of the said touch position detecting means and providing an output representative thereof;

scanning means for periodically providing a scanning signal to the touch position detecting means to enable touch detection;

duration timer means for providing a time measurement signal on receipt of a trigger signal from the touch position detecting means;

co-ordinate memory means for storing the co-ordinates of a current touch position on the touch panel detected by the co-ordinate detecting means;

co-ordinate comparing means for comparing, for each scan, the coordinates of the previously stored current touch position in the memory means with those of current touch position;

characterised by

an operation discriminator for determining, according to the relationship between the timer measurement signals received from the timer means and the results of the comparison from the co-ordinate comparing means, which of a plurality of predetermined outputs to issue, whereby, by the user touching and/or moving a finger across the touch panel, an operational mode for an electronic device can be commanded, said operation discriminator including means for determining which output to issue from a plurality of predetermined outputs based upon the direction and distance the finger moves in a predetermined period of time and means for determining which output to issue from the said plurality of predetermined outputs based on the time duration that the finger touches the touch panel while moving less than a predetermined distance.

In the drawings:-

Fig. 1 is a block diagram showing a conventional touch panel control device;

Fig. 2 is a front view showing a touch panel in a touch panel control device according to the invention;

Fig. 3 is a block diagram showing the touch panel control device according to the invention;

Fig. 4 is a circuit diagram of one example of a touch position detecting means in the touch panel control device of the invention.

Fig. 5 is a timing chart for a description of the operation of the touch position detecting means shown in Fig. 4;

Figs. 6, 7 and 8 are three parts of a flow chart for describing the operation of the touch panel control device of the invention; and

Figs. 9(a) and 9(b) are illustrations of displays on the touch panel.

In Fig. 2, reference numeral 1 designates a touch panel. Along the four sides of the touch panel are LEDs (light emitting diodes) 101 through 114 and light receiving means, namely, photo-transistors 201 through 214. They are alternately arranged in such a manner that the photo-transistors 201 through 214 receive light beams from the LEDs 101 through 114. respectively. The photo-transistors 201 through 214 provide high level (H) outputs upon reception of the light beams. The LEDs and the photo-transistors are alternately arranged along the side of the touch panel to eliminate the possibility that a photo-transistor might erroneously detect the light beam emitted by an adjacent LED rather than its corresponding LED.

The control system (Fig. 3) includes a touch operation discriminator 2. The discriminator 2 determines which finger movement is being performed by determining the direction of finger movement (ie. operation by the user) and the time period over which the finger touches the touch panel. A respective operation output is applied to a command discriminator 12. The command discriminator 12 supplies an operation command to a system controller 13 in response to the operation discriminated by the operation discriminator 2. The operation command controls the operation of an electronic device such as a cassette player, radio tuner, or compact disk player, and data representing the operating condition thereof is fed back to the command discriminator 12.

The operation discriminator 2 also applies a scanning pulse signal (STB signal) to a timing circuit 3 with a period of about 10ms as shown in the timing chart of Fig. 5. The scanning time is not necessarily 10ms. It should be determined on the basis of the speed of the finger scanning the panel. During the generation of the STB signal, the timing circuit 3 produces pulses for activating the LEDs 101 through 114 in Fig. 2 so that turn-on input voltages are successively applied to the input terminals 301 through 314 of the LEDs 101 through 114. The light from the LEDs 101 through 114 is applied to the photo-transistors 201 through 214, respectively, the outputs of which are provided at an output terminal 400 in Fig. 4. The timing of these serial outputs is as indicated in Fig. 5. The serial outputs are applied to a serial-to-parallel converter 4, where they are converted into parallel outputs, which are latched by a data latch 5. One scanning operation is completed when the timing circuit 3 has applied the input voltages to all the LEDs. During a waiting time T, the data latched by the data latch 5 is transferred to the operation discriminator 2.

The timing chart of Fig. 5 represents the case where the finger touches the touch panel at a point marked with a circle in Fig. 2. In this case, the outputs of the LEDs 106 and 111 are blocked and therefore the outputs of photo-transistors 206 and 211 are maintained at a low level (L). Therefore, the data latched by the data latch circuit 5 is:

1 1 1 1 1 0 1 1 in the X-direction

1 1 0 1 1 1 in the Y direction

As apparent from the above, the coordinates of the touch position can be detected from the position of the "0" levels in the data latch.

During the waiting time T, the output of the data latch circuit 5 are simultaneously applied to a NOR gate 8, the output of which is raised to H when the finger touches the panel.

With further reference to Fig. 3. there is shown a coordinate memory 6 for storing the coordinates of a touch position at the start of a touch detecting operation or at the end of an operation (ie. it retains the touch

position until the next operation); and a timer 7 which is reset in synchronism with the storing operation of the coordinate memory 6, to start its time counting operation. The control system further comprises an arithmetic circuit (not shown) for comparing the coordinates of the present touch position with those stored in the coordinate memory 6, to detect the direction of movement of the finger on the panel 1; a touch memory 10 for storing the touch and non-touch on the touch panel 1; and a command memory 11 for storing the user operation determining output which is discriminated by the operation discriminator 2 and applied to the command discriminator 12.

The operation discriminator 2 supplies a CMD signal representing the operation given to the touch panel 1 to the command discriminator 12. In response to the CMD signal the command discriminator 12 applies a command to the system controller 13 for operating the acoustic device.

In general, the following commands are required for acoustic devices used in vehicles:

(1) Tape deck

Fast forward, rewind, stop, repetitive playback, jump for station and playback.

(2) Tuner

Up sweep, down sweep, preset channel up, preset channel down, channel preset, and auto tuning

(3) Compact disk

Playback, partial repeat, whole repeat, skip, stop, jump for music, and disk take-out.

As is apparent from the above, six or seven different commands are required for each acoustic device used in vehicles.

These commands can be issued by utilisation of, for example, seven finger movements or operations on the touch panel; movements of the finger upwardly, downwardly, right and left (in, D, R, & L),keeping the finger at a point (KEEP), touching the panel briefly (HIT) and touching the panel briefly twice (2HIT). The above described operations are discriminated by the discriminator 2 which provides outputs to the command discriminator 12 which gives appropriate commands to the acoustic devices.

The above-described operations can be discriminated not only by the contents of the arithmetic circuit, but also based on the touch memory circuit 10 in which the touch condition of the preceding scan is stored, the content of the command memory 11 which stores the command or output given to the command discriminator 12 before the scan, and the time determined by the timer 7.

For instance, the commands can be issued as follows:

(1) When the co-ordinate changes are at least four a second, the commands corresponding to U, D, R and L operations (movements) are outputted separately;

(2) The command KEEP is outputted when the finger is kept on the touch panel for at least one second and moves three co-ordinate positions or less.

(3) The command HIT is outputted when the finger is kept on the panel for 0.5 second or less, and moves three coordinates or less.

(4) The command 2HIT is outputted when, within two seconds after the issue of the command HIT, the finger is moved (operated) in the same manner as in the case of outputting the command HIT.

A method of discriminating the above-described finger operations will be described with reference to the flow charts of Figs. 6, 7. and 8.

In these figures, steps 1 through 7 form a routine for starting, when the finger touches the panel, storage of the co-ordinates of that position and the operation of the timer. After the operation discriminator 2 outputs a scan instruction signal (STB) in step 1, in step 2 it is determined whether or not the finger touches the panel. When it is determined that the finger has touched the touch panel in step 3 the coordinates of that position are read. In step 4, the content of the touch memory 10, which stores the touch condition of the touch condition of the preceding scan, is read to determine whether or not the finger has touched the panel for the first time. If it is determined that the content of the touch memory 10 has been cleared, then in step 5 a "1" is written into the touch memory. In step 6 the above-described coordinates of the position are stored in the coordinate memory 6, and in step 7 the timer is reset and started.

(1) Discrimination of the finger operations U, D, R and L

Discrimination of the finger operations U. D, R and L is achieved in steps 8 through 17.

In step 8, the coordinates stored in the coordinate memory 10 are compared with the present coordinates to obtain the variations in the X- and Y-directions. In step 9, by referring to the command memory 11 which stores the operation content outputted previously, it is determined whether or not the upward, downward, rightward or leftward operation has been applied to the command discriminator 12. If it is determined that one of such operations has been applied thereto, then it is unnecessary to discriminate the movement in that direction again, and steps 11 and 11' are effected in which the movement in a

direction perpendicular to the direction of that movement is detected so that the finger movement may not be regarded as "the finger is moved four coordinates twice", when the finger is moved eight coordinates or more. If no command is applied to the command discriminator 12, then in step 10 it is determined, from the above-described variations, whether the finger is moved horizontally or vertically.

In step 12, it is determined whether, in each of the X- and Y-directions, the finger is moved in the positive (+) direction or in the negative (-) direction, so that in step 13 the operation content corresponding to the direction of movement is provided.

In step 14, the operation content thus provided is applied to the command discriminator 12 (in this operation, the command discriminator 12 supplies the instruction to the system controller 13 which has been predetermined for the electronic equipment in use), and in step 15 the operation content is stored in the command memory 11.

In step 16, the coordinates stored in the coordinate memory are rewritten into those of the touch position obtained at the time of outputting the operation content, and in step 17, the timer is reset so that the following discrimination is carried out.

(2) Discrimination of the finger operation KEEP

The finger operations KEEP and HIT are distinguished from each other according to how long the finger touches the touch panel. Therefore, if the finger operation KEEP is determined merely from the time count data of the timer 7, then the determination may include the finger operation HIT. That is, in the following case:

0 to 0.5 second	HIT
0.5 to 1 second	Not applicable
More than 1 second	KEEP

while the finger operation KEEP is discriminated the finger operation HIT may occur. In the case where the touch time is 0.5 to 1 second, no action is taken, as was listed above. This is to prevent an erroneous operation which may be caused when the finger operations are not strictly defined. Therefore, the step may be eliminated as the case may be.

Therefore, in a routine consisting of steps 18 through 25 as shown in Fig. 7, when at step 20 the time count data of the timer exceeds one (1) second and in step 22 it is determined that the finger operation KEEP has not been supplied as the operation content to the command discriminator 12, then it is supplied as the operation content to the command discriminator 12 in step 24. The reason why, in step 22, it is detected whether or not the finger operation KEEP has been supplied as the operation content is to prevent the difficulty that, when the finger touches the touch panel for more than two seconds, the finger operation KEEP may be provided as the operation content two or more times.

When in step 18 the touch time is shorter than 0.5 second, in step 19 the finger operation HIT is provided as the operation content; however, it is not applied to the command discriminator 12 yet in the flow chart.

(3) Discrimination of the finger operations HIT and 2HIT

The finger operations HIT and 2HIT can be identified as shown in the flow chart of Fig. 8.

When in step 2 of Fig. 6 it is determined that the finger is not in touch with the touch panel, then in step 26 it can be determined by referring to the touch memory 10, adapted to store the touch or non-touch detected in the preceding scan, whether or not the touch was just now released. When it is determined that the touch was released just now, then the content of the touch memory 11 is "1". In step 27, the content of the touch memory 11 is cleared, and in step 29 it is determined whether or not the operation content is of the finger operation HIT. That is, if in step 19 of Fig. 7 the finger operation HIT is provided as the operation content, then step 30 is effected. In step 30, when it is determined from the content of the command memory 11 that nothing is provided, then the operation content, or HIT, is applied to the command discriminator 12. If the finger operation HIT is applied as the operation content in the command memory 11, then it is the second finger operation HIT, and therefore the finger operation 2HIT is applied as the operation content to the command discriminator 12. If the storage data of the command memory 11 is other than that, then in a routine of steps 36 through 38 the command memory and the operation content are cleared and the timer is stopped.

When in step 26 it is determined that the content of the touch memory 10 has been cleared since the preceding scan, then step 28 is effected. If, in step 28, the timer shows the lapse of two seconds, i.e. nothing is operated for two seconds, then the routine of steps 36, 37 and 38 is effected.

The operation discriminator 2 can apply the seven operating modes to the command discriminator 12 in the above described manner.

In the operation discriminator 2, the above-described operation contents are converted into commands (outputs) suitable for the operations of the acoustic devices to be controlled in such a manner that any one of the commands can be used for a plurality of acoustic devices - for instance the finger operation R is used for the "up direction sweep" of a tuner and also for the "fast forward" of a tape deck. The commands are applied to the system controller 13 by the command discriminator 12. In response to the commands, the system controller 13 controls the operations of the acoustic devices.

In the above-described embodiment, the seven finger operations are discriminated, and in response to the seven finger operations thus discriminated the command discriminator outputs the commands. If the seven finger operations are utilised in combination, then more commands can be issued.

For instance, in the case of a tape deck, the finger operations may be combined as follows: When, after the "fast forward" operation is selected by the finger operation R, the finger operation U is carried out, a so-called "FF Scan" operation can be performed in which the "fast forward" operation of the tape is carried out to detect an intermusic region, and after the sound reproduction is performed, the "fast forward" operation is carried out again. When the finger operation R is followed by the finger operation D, the "FF music search" operation is carried out.

In this case, the system controller 13 applies data representing the operating condition of the acoustic device to the command discriminator 12 at all times, and the command provided by the command discriminator is determined according to the operating condition.

In the case of the tape deck described above, normally the finger operation R is used for the command "fast forward", and the finger operation U is for the command "volume up". However, during the "fast forward" operation. the finger operation U is used to output the command "FF scan".

If a plurality of operation outputs are combined to provide a command in the above-described manner, then the finger operations can be applied to a variety of operation modes of acoustic devices mounted in a vehicle.

The touch panel 1 may comprise a picture display unit such as a cathode ray tub (CRT). The system controller 13 applies display mode data to a CRT driver 14 in correspondence to an acoustic device in use, thereby to control the display on the touch panel 1.

Figs. 9(a) and 9(b) show examples of a CRT display. More specifically, the part (a) of Fig. 9 shows a CRT display in the "tape deck" mode, and the part (b) of Fig. 9 shows a CRT display in a "tuner" mode.

In Fig. 9. the finger operations U,D, R and L are indicated by the arrows which are extended upwardly. downwardly, rightwardly and leftwardly, respectively, and finger operations HIT, 2HIT and KEEP are indicated by one dot, two dots and a bar, respectively; and the compound finger operations are indicated by the bent arrows - for instance the compound finger operation R U is indicated by the arrow which is extended rightwardly and then upwardly.

Therefore, merely by moving the finger according to the indications or marks displayed on the touch panel, the commands corresponding to the finger operations can be applied to the system controller 13.

The contents of the display on the display unit can be changed according to the operation conditions of an acoustic device to be controlled. For instance, for the "fast forward" operation of a tape deck, the mark "▷▷" is caused to flicker or its colour is changed, so that the operator can detect whether or not the finger operation on the touch panel has been carried out correctly, to thereby prevent erroneous operation.

As shown in Fig. 9 the display mark "2nd" is provided for the finger operation KEEP. It can be utilized in the case where the number of finger operations is smaller than the number of commands to be issued. That is, in this case, the first picture display is switched over to the second picture display by one finger operation (KEEP in this case) so that the command discriminator 12 can provide commands different from those used when the first picture display is employed. That is, more intricate operations of electronic devices can be controlled.

As is apparent from the above description, the predetermined commands can be issued according to the distance of movement of the finger over the touch panel, the period of time for which the finger touches the touch panel, and the number of time the touch panel is touched with the finger, and one and the same touch panel can be used for a plurality of acoustic devices such as a cassette tape player and a radio tuner installed in a vehicle. Therefore, the limited space in the vehicle can be efficiently utilized, and the touch panel control device installed will never obstruct the operator's driving.

Furthermore, since the touch panel serves as the display unit, the probability of erroneous operation is decreased.

Claims

1. A touch panel control device for outputting commands, according to how a finger touches a touch panel (1), the device comprising
touch position detecting means (101,114,201,214) in a matrix form on said touch panel (1), for detecting a touch on the touch panel and providing output signals;
means (4,5) for detecting the co-ordinates of the touch position from the said output signals of the said touch position detecting means and providing an output representative thereof;
scanning means (2,3) for periodically providing a scanning signal to the touch position detecting means to enable touch detection;
duration timer means (7) for providing a time measurement signal on receipt of a trigger signal from the touch position detecting means;
co-ordinate memory means (6) for storing the co-ordinates of a current touch position on the touch panel detected by the co-ordinate detecting means (4,5);
co-ordinate comparing means for comparing, for each scan, the coordinates of the previously stored current touch position in the memory means with those of a current touch position;
characterised by
an operation discriminator (2) for determining, according to the relationship between the timer measurement signals received from the timer means (7) and the results of the comparison from the co-ordinate comparing means, which of a plurality of predetermined outputs to issue, whereby, by the user touching and/or moving a finger across the touch panel (1), an operational mode for an electronic device can be commanded, said operation discriminator including means for determining which output to issue from a plurality of predetermined outputs based upon the direction and distance the finger moves in a predetermined period of time and means for determining which output to issue from the said plurality of predetermined outputs based on the time duration that the finger touches the touch panel while moving less than a predetermined distance.

2. A device according to claim 1, further including a command discriminator for receiving the outputs from the operation discriminator and for issuing respective operational commands to the electronic device.

3. A device as claimed in claim 1 or claim 2, wherein the touch position detecting means comprises light emitting elements (101-114) and light receiving elements (201-214) arranged along the sides of the touch panel (1) in such a manner that said light receiving elements receive light beams emitted by respective light emitting elements.

4. A device as claimed in claim 2, in which the touch panel (1) comprises a picture display unit, the display of which is changeable according to the operating conditions of the electronic device to be controlled.

Patentansprüche

1. Eine Berührungsschalttafel-Steuereinrichtung zum Ausgeben von Befehlen entsprechend einer Art und Weise, wie ein Finger eine Berührungsschalttafel (1) berührt, wobei die Vorrichtung umfaßt:
die Berührstellen nachweisende Vorrichtungen (101, 114, 201, 214), die in der Form einer Matrix auf der Berührungsschalttafel (1) angeordnet sind, um eine Berührung auf der Berührungsschalttafel nachzuweisen und Ausgabesignale zu schaffen;
Vorrichtungen (4, 5) zum Feststellen der Koordinaten der Berührungsstellen aus den Ausgabesignalen der, die Berührungsstellen nachweisenden Vorrichtungen und zum Schaffen einer Ausgabedarstellung davon;
abrasternde Vorrichtungen (2, 3), um periodisch ein Abrastersignal für die, die Berührungslagen nachweisenden Vorrichtungen bereitzustellen, um einen Berührungsnachweis zu ermöglichen;
eine Zeitdauermeßvorrichtung (7), um ein Zeitmeßsignal nach Empfang eines Auslösesignals von den, die Berührungslage nachweisenden Vorrichtungen zu schaffen;
eine Koordinatenspeichervorrichtung (6) zum Speichern der Koordinaten einer vorliegenden Berührungsstelle auf der Berührungsschalttafel, die von den, die Koordinaten feststellenden Vorrichtungen (4,

5) festgestellt wurden;
eine die Koordinaten vergleichende Vorrichtung zum Vergleichen der Koordinaten der vorher gespeicherten vorliegenden Berührungsstelle in der Speichervorrichtung mit denen einer gegenwärtig vorliegenden Berührungsstelle bei jedem Abrastervorgang;
gekennzeichnet durch
eine Betriebsunterscheidungsvorrichtung (2), um entsprechend der gegenseitigen Beziehung zwischen den von der Zeitmeßvorrichtung (7) empfangenen Zeitmeßsignalen und den Ergebnissen des Vergleichs von der die Koordinaten vergleichenden Vorrichtung zu bestimmen, welche Ausgaben aus einer Vielzahl von vorbestimmten Ausgaben auszugeben sind, wodurch, wenn der Benutzer die Berührungsschalttafel (1) berührt und/oder einen Finger darüber bewegt, eine Betriebsweise für eine elektronische Vorrichtung angewiesen werden kann, wobei die Betriebsunterscheidungsvorrichtung eine Vorrichtung einschließt, um zu bestimmen, welche Ausgabe von einer Vielzahl von vorbestimmten Ausgaben auf der Grundlage der Richtung und Entfernung des sich bewegenden Fingers während einer vorbestimmten Zeitdauer auszugeben ist, und die weiter eine Vorrichtung einschließt, um zu bestimmen, welche Ausgabe aus der Vielzahl von vorbestimmten Ausgaben auf der Grundlage der Zeitdauer, in der der Finger die Berührungsschalttafel berührt, wenn er weniger als eine vorbestimmte Strecke sich bewegt, auszugeben ist.

2. Eine Vorrichtung nach Anspruch 1, die weiter eine Befehlsunterscheidungsvorrichtung einschließt, um die Ausgaben von der Betriebsunterscheidungsvorrichtung zu empfangen und entsprechende Betriebsanweisungen an die elektronische Vorrichtung auszusenden.

3. Eine Vorrichtung nach Anspruch 1 oder 2, wobei die, die Berührungsstelle nachweisenden Vorrichtungen Licht emittierende Elemente (101-114) und Licht empfangende Elemente (201-214) umfassen, die entlang der Seiten der Berührungsschalttafel in einer solchen Weise angeordnet sind, daß die Licht empfangenden Elemente Lichtstrahlen empfangen, die von den entsprechenden Licht emittierenden Elementen emittiert wurden.

4. Eine Vorrichtung nach Anspruch 2, in der die Berührungsschalttafel (1) eine Bildanzeigeeinheit umfaßt, deren Anzeige sich gemäß dem Betriebszustand der zu steuernden elektronischen Vorrichtung ändern kann.

Revendications

1. Dispositif de commande de panneau tactile destiné à émettre des commandes conformément à la façon dont un doigt effleure un panneau tactile (1), le dispositif comprenant :
un moyen de détection de position d'effleurement (101, 114, 201, 214) sous forme matricielle situé sur ledit panneau tactile (1) pour détecter un effleurement sur le panneau tactile et pour produire des signaux de sortie ;
un moyen (4, 5) pour détecter les coordonnées de la position d'effleurement à partir desdits signaux de sortie dudit moyen de détection de position d'effleurement et pour produire une sortie représentative de celles-ci ;
un moyen de balayage (2, 3) pour produire périodiquement un signal de balayage pour le moyen de détection de position d'effleurement afin de permettre une détection d'effleurement ;
un moyen de minuterie de durée (7) pour produire un signal de mesure de temps suite à la réception d'un signal de déclenchement en provenance du moyen de détection de position d'effleurement ;
un moyen de mémoire de coordonnées (6) pour stocker les coordonnées d'une position d'effleurement courante sur le panneau tactile détecté par le moyen de détection de coordonnées (4, 5) ;
un moyen de comparaison de coordonnées pour comparer, pour chaque balayage, les coordonnées de la position d'effleurement courante stockées préalablement dans le moyen de mémoire à celles d'une position d'effleurement courante ;
caractérisé par :
un discriminateur de fonctionnement (2) pour déterminer, conformément à la relation qui lie les signaux de mesure de minuterie reçus depuis le moyen de minuterie (7) et les résultats de la comparaison en provenance du moyen de comparaison de coordonnées, laquelle d'une pluralité de sorties prédéterminées il convient de délivrer, d'où il résulte que, du fait de l'effleurement de l'utilisateur et/ou du déplacement d'un doigt sur le panneau tactile (1), un mode de fonctionnement pour

un dispositif électronique peut être commandé, ledit discriminateur de fonctionnement incluant un moyen pour déterminer quelle sortie il convient de délivrer parmi une des sorties prédéterminées sur la base de la direction et de la distance selon lesquelles le doigt se déplace pendant une période temporelle prédéterminée et un moyen pour déterminer quelle sortie il convient de délivrer parmi lesdites pluralités de sorties prédéterminées sur la base de la durée temporelle pendant laquelle le doigt affleure le panneau tactile tout en se déplaçant sur une distance inférieure à une distance prédéterminée.

2. Dispositif selon la revendication 1, incluant en outre un discriminateur de commande pour recevoir les sorties en provenance du discriminateur de fonctionnement et pour délivrer des commandes de fonctionnement respectives au dispositif électronique.

3. Dispositif selon la revendication 1 ou 2, dans lequel le moyen de détection de position d'effleurement comprend des éléments émetteurs de lumière (101-114) et des éléments récepteurs de lumière (201-214) agencés le long des côtés du panneau tactile (1) d'une manière telle que lesits éléments récepteurs de lumière reçoivent des faisceaux lumineux émis par les éléments émetteurs de lumière respectifs.

4. Dispositif selon la revendication 2, dans lequel le panneau tactile (1) comprend une unité d'affichage d'image dont l'affichage peut être modifié en relation avec les conditions de fonctionnement du dispositif électronique qui doit être commandé.

FIG. 1

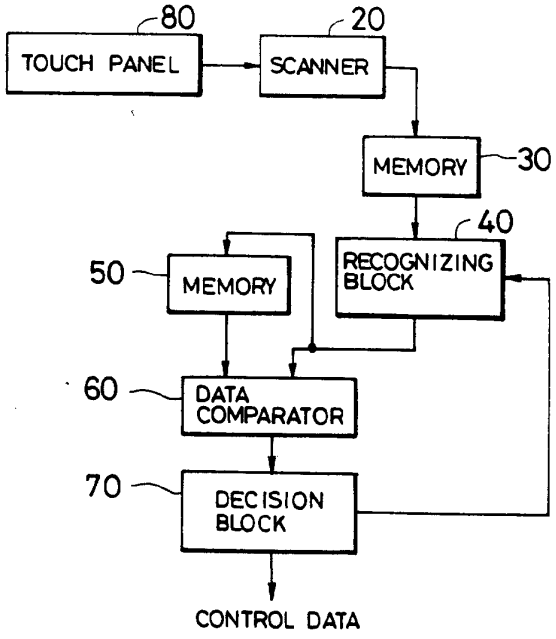
80
TOUCH PANEL
20
SCANNER
MEMORY
30
40
RECOGNIZING BLOCK
50
MEMORY
60
DATA COMPARATOR
70
DECISION BLOCK
CONTROL DATA

FIG. 2

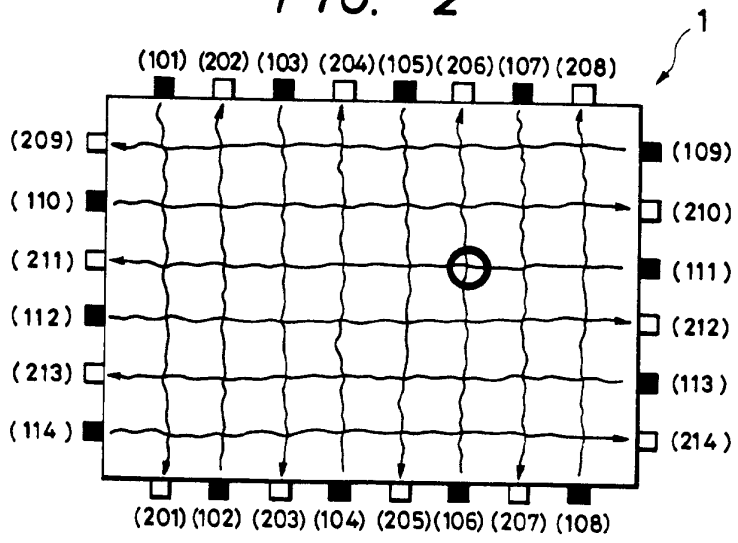
1
(101) (202) (103) (204) (105) (206) (107) (208)
(209)
(110)
(211)
(112)
(213)
(114)
(109)
(210)
(111)
(212)
(113)
(214)
(201) (102) (203) (104) (205) (106) (207) (108)

FIG. 3

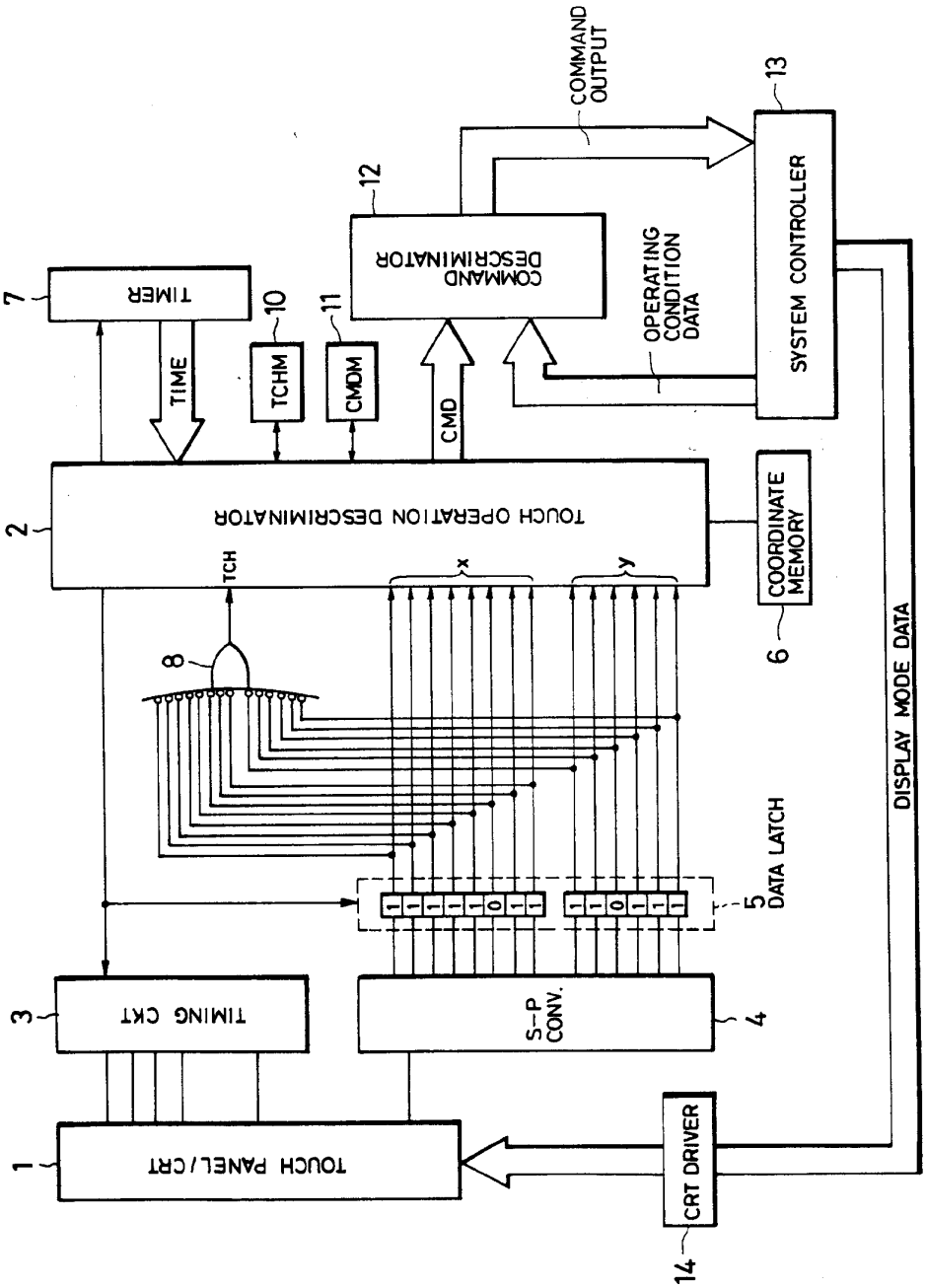
COMMAND OUTPUT
13
SYSTEM CONTROLLER
12
COMMAND DESCRIMINATOR
OPERATING CONDITION DATA
7
TIMER
10
TCHM
11
CMDM
TIME
CMD
2
TOUCH OPERATION DESCRIMINATOR
COORDINATE MEMORY
6
TCH
x
y
8
DISPLAY MODE DATA
5
DATA LATCH
3
TIMING CKT
S-P CONV.
4
1
TOUCH PANEL/CRT
CRT DRIVER
14

FIG. 4

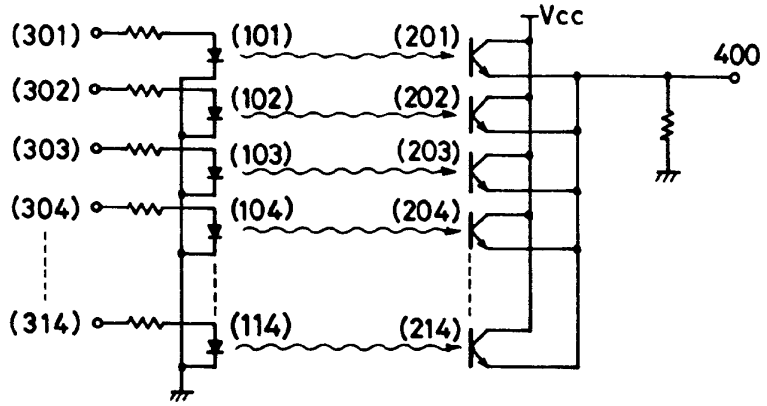
(301)
(302)
(303)
(304)
(314)
(101)
(102)
(103)
(104)
(114)
(201)
(202)
(203)
(204)
(214)
Vcc
400

FIG. 5

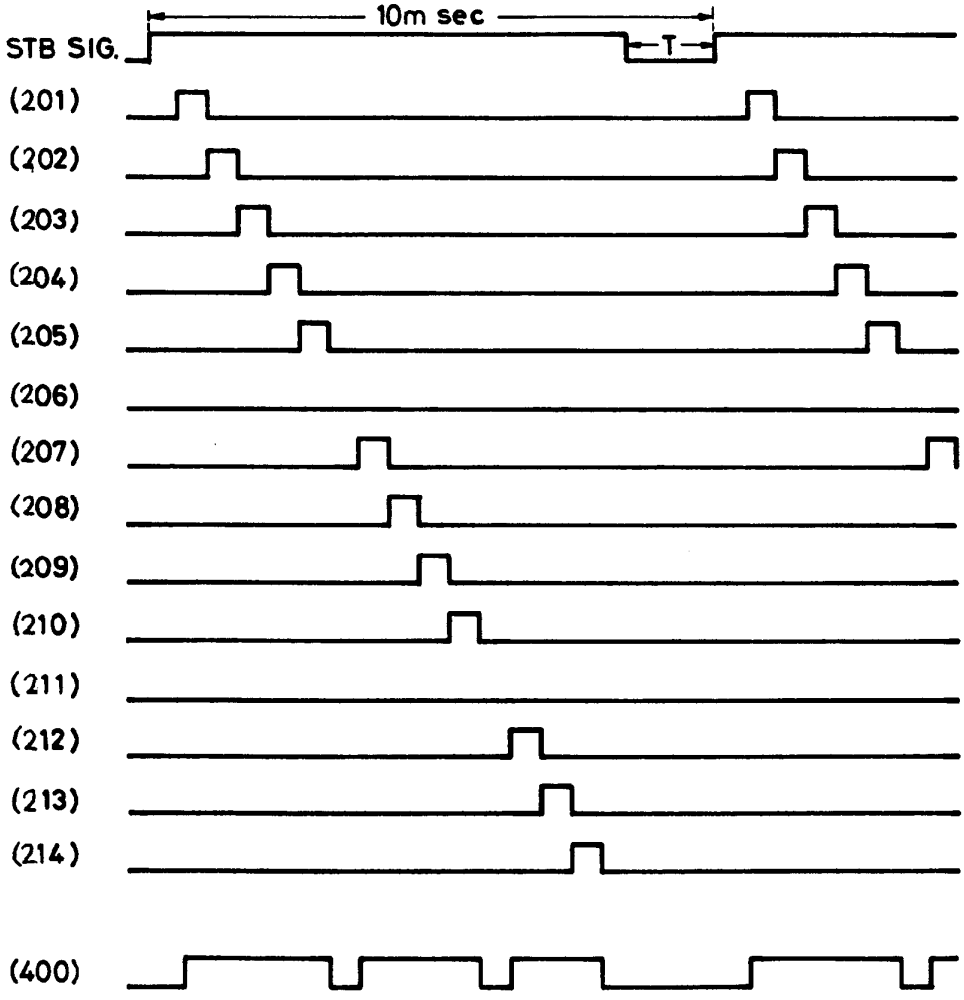
10m sec
T
STB SIG.
(201)
(202)
(203)
(204)
(205)
(206)
(207)
(208)
(209)
(210)
(211)
(212)
(213)
(214)
(400)

FIG. 6

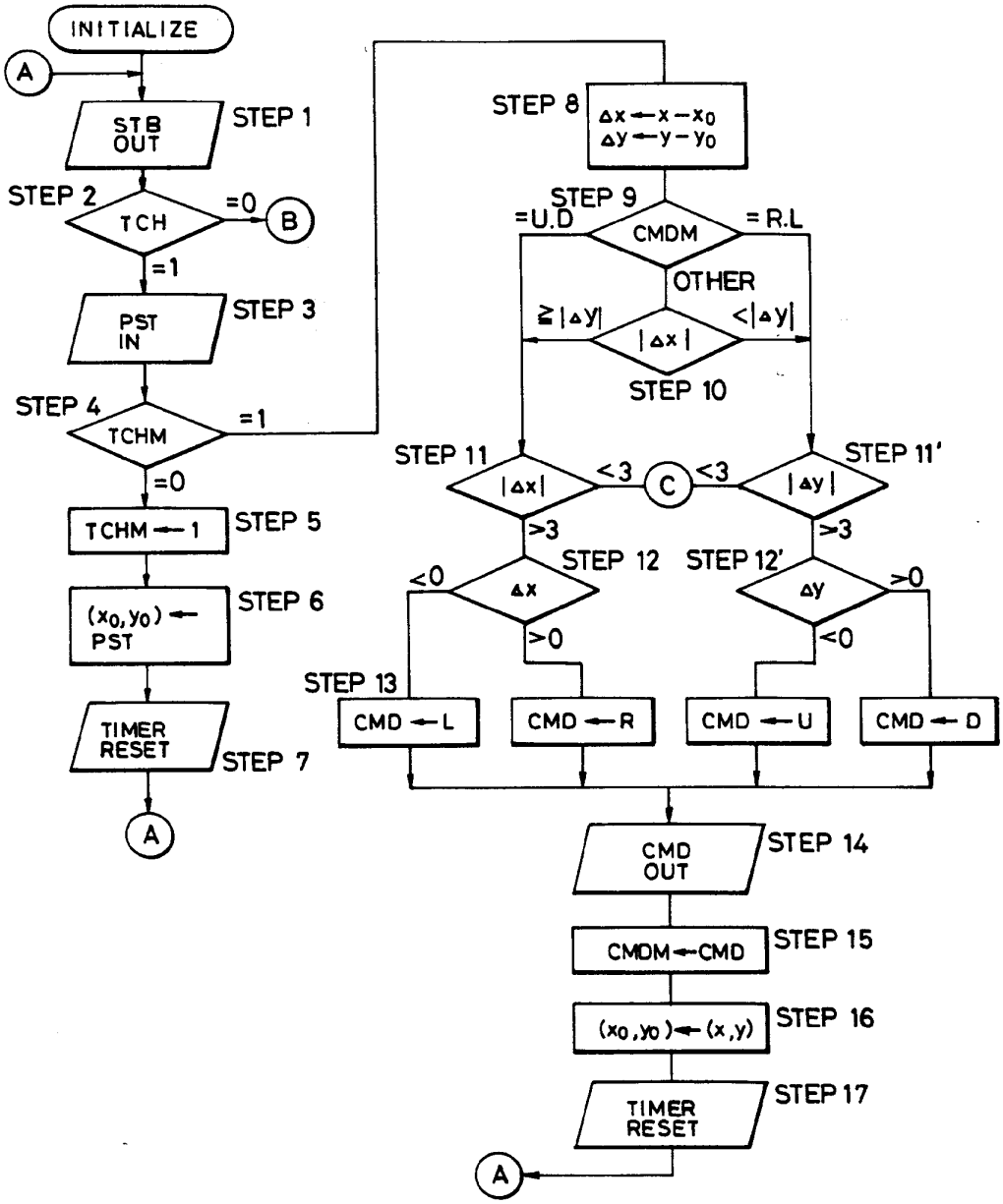
INITIALIZE
A
STB OUT
STEP 1
STEP 2
TCH
=0
B
=1
PST IN
STEP 3
STEP 4
TCHM
=1
=0
TCHM ← 1
STEP 5
(x0, y0) ← PST
STEP 6
TIMER RESET
STEP 7
A
STEP 8
Δx ← x − x0
Δy ← y − y0
STEP 9
=U.D
CMDM
= R.L
OTHER
≧|Δy|
|Δx|
<|Δy|
STEP 10
STEP 11
|Δx|
<3
C
<3
|Δy|
STEP 11'
>3
>3
STEP 12
STEP 12'
<0
Δx
>0
Δy
>0
<0
STEP 13
CMD ← L
CMD ← R
CMD ← U
CMD ← D
CMD OUT
STEP 14
CMDM ← CMD
STEP 15
(x0, y0) ← (x, y)
STEP 16
TIMER RESET
STEP 17
A

FIG. 7

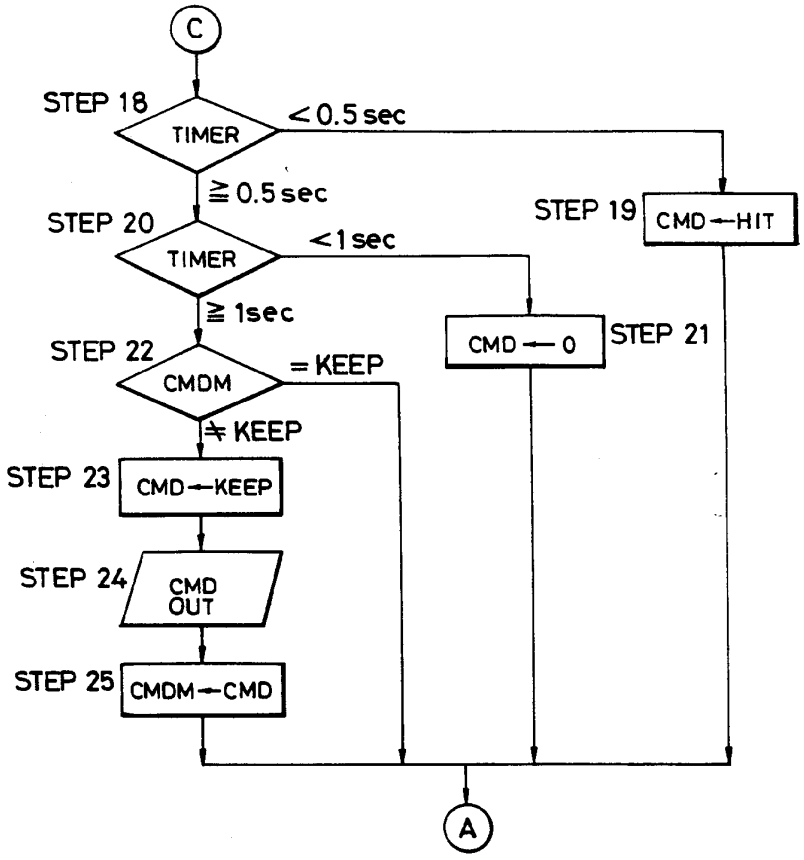

FIG. 9(a)

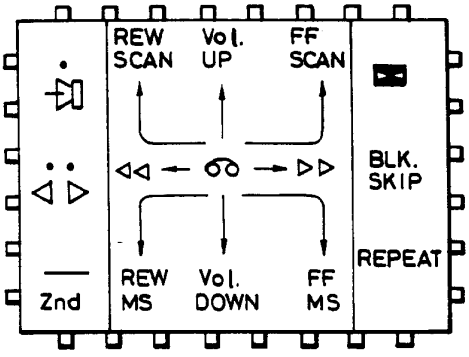

FIG. 9(b)

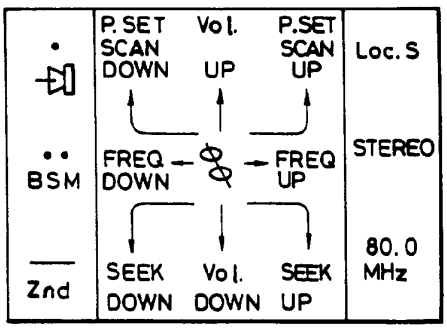

FIG. 8

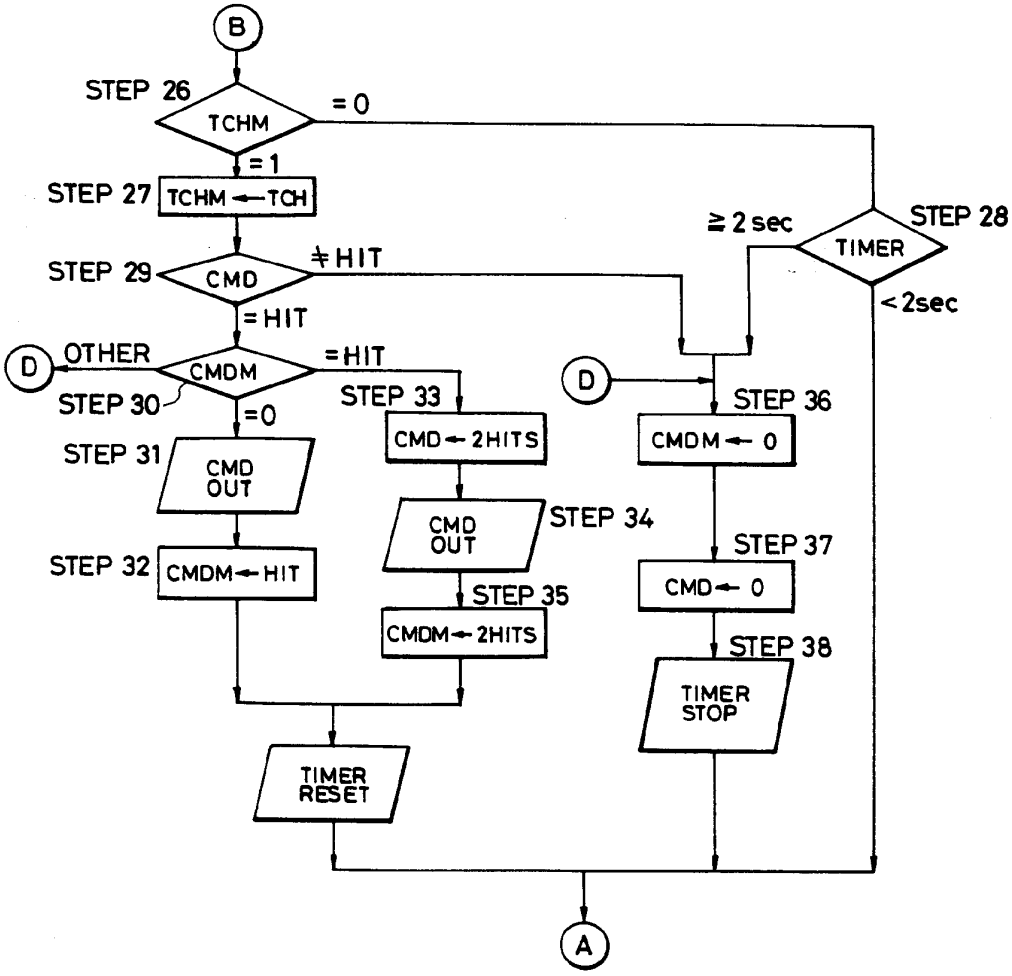
B
STEP 26
TCHM
= 0
= 1
STEP 27
TCHM ← TCH
STEP 29
CMD
≠ HIT
= HIT
D
OTHER
CMDM
= HIT
STEP 30
= 0
STEP 31
CMD OUT
STEP 32
CMDM ← HIT
STEP 33
CMD ← 2HITS
CMD OUT
STEP 34
STEP 35
CMDM ← 2HITS
TIMER RESET
≧ 2 sec
TIMER
STEP 28
< 2sec
D
STEP 36
CMDM ← 0
STEP 37
CMD ← 0
STEP 38
TIMER STOP
A

Electronic Patent Application Fee Transmittal	
Application Number:	10315250
Filing Date:	10-Dec-2002
Title of Invention:	User interface
First Named Inventor/Applicant Name:	Magnus Goertz
Filer:	Marc Aron Berger
Attorney Docket Number:	NEONODE.P004
Filed as Large Entity	

Utility under 35 USC 111(a) Filing Fees

Description	Fee Code	Quantity	Amount	Sub-Total in USD($)
Basic Filing:				
Pages:				
Claims:				
Miscellaneous-Filing:				
Petition:				
Patent-Appeals-and-Interference:				
Post-Allowance-and-Post-Issuance:				
Extension-of-Time:				

Description	Fee Code	Quantity	Amount	Sub-Total in USD($)
Miscellaneous:				
Submission- Information Disclosure Stmt	1806	1	180	180
		Total in USD ($)		**180**

Electronic Acknowledgement Receipt	
EFS ID:	5265128
Application Number:	10315250
International Application Number:	
Confirmation Number:	1226
Title of Invention:	User interface
First Named Inventor/Applicant Name:	Magnus Goertz
Customer Number:	75660
Filer:	Marc Aron Berger
Filer Authorized By:	
Attorney Docket Number:	NEONODE.P004
Receipt Date:	04-MAY-2009
Filing Date:	10-DEC-2002
Time Stamp:	09:58:36
Application Type:	Utility under 35 USC 111(a)

Payment information:

Submitted with Payment	yes
Payment Type	Credit Card
Payment was successfully received in RAM	$180
RAM confirmation Number	6235
Deposit Account	
Authorized User	

File Listing:

Document Number	Document Description	File Name	File Size(Bytes)/ Message Digest	Multi Part /.zip	Pages (if appl.)

1	Information Disclosure Statement (IDS) Filed (SB/08)	NEONODE_P004_IDS_4_May_2009.pdf	608058 c778c8e6e1ab128465ca00f0e3eb08645d09775f	no	4
Warnings:					
Information:					
A U.S. Patent Number Citation or a U.S. Publication Number Citation is required in the Information Disclosure Statement (IDS) form for autoloading of data into USPTO systems. You may remove the form to add the required data in order to correct the Informational Message if you are citing U.S. References. If you chose not to include U.S. References, the image of the form will be processed and be made available within the Image File Wrapper (IFW) system. However, no data will be extracted from this form. Any additional data such as Foreign Patent Documents or Non Patent Literature will be manually reviewed and keyed into USPTO systems.					
2	Foreign Reference	EP0330767.pdf	894696 38b2b70ee97575a404c9671d5cc1baa33391d3df	no	15
Warnings:					
Information:					
3	Fee Worksheet (PTO-875)	fee-info.pdf	29914 c5f0cf326fff54ac49d95594c23f88d2bae23d43	no	2
Warnings:					
Information:					
			Total Files Size (in bytes):	1532668	

This Acknowledgement Receipt evidences receipt on the noted date by the USPTO of the indicated documents, characterized by the applicant, and including page counts, where applicable. It serves as evidence of receipt similar to a Post Card, as described in MPEP 503.

<u>New Applications Under 35 U.S.C. 111</u>
If a new application is being filed and the application includes the necessary components for a filing date (see 37 CFR 1.53(b)-(d) and MPEP 506), a Filing Receipt (37 CFR 1.54) will be issued in due course and the date shown on this Acknowledgement Receipt will establish the filing date of the application.

<u>National Stage of an International Application under 35 U.S.C. 371</u>
If a timely submission to enter the national stage of an international application is compliant with the conditions of 35 U.S.C. 371 and other applicable requirements a Form PCT/DO/EO/903 indicating acceptance of the application as a national stage submission under 35 U.S.C. 371 will be issued in addition to the Filing Receipt, in due course.

<u>New International Application Filed with the USPTO as a Receiving Office</u>
If a new international application is being filed and the international application includes the necessary components for an international filing date (see PCT Article 11 and MPEP 1810), a Notification of the International Application Number and of the International Filing Date (Form PCT/RO/105) will be issued in due course, subject to prescriptions concerning national security, and the date shown on this Acknowledgement Receipt will establish the international filing date of the application.

Attorney's Docket No.: NEONODE.P004 *PATENT*

IN THE UNITED STATES PATENT AND TRADEMARK OFFICE

In Re Patent Application of:	)	
	)	Examiner: Ryan F. Pitaro
Magnus Goertz	)	
	)	Art Unit: 2174
Application No: 10/315,250	)	
	)	
Filed: December 10, 2002	)	
	)	
For: USER INTERFACE FOR MOBILE HANDHELD COMPUTER UNIT	)	
	)	

Mail Stop AMENDMENT
Commissioner for Patents
P. O. Box 1450
Alexandria, VA 22313-1450

AMENDMENT AND RESPONSE TO OFFICE ACTION

UNDER 37 C.F.R. §1.111

Sir:

In response to the Office Action dated December 23, 2008, applicant respectfully requests that the above-identified application be amended as follows:

IN THE CLAIMS:

Please cancel claims **17** and **19** – **47** without prejudice.

Please substitute the following claims for the pending claims with the same number:

1. (currently amended) A computer readable medium storing a computer program with computer program code, which, when read by a mobile handheld computer unit, allows the computer to present a user interface for the mobile handheld computer unit, the user interface comprising:

a touch sensitive area in which representations of ~~a plurality of functions~~ at least one function are displayed, and each function of said ~~plurality of functions~~ at least one function being mapped to a corresponding location in the touch sensitive area at which the representation of the function is displayed, and being activated by an object touching the corresponding location and then gliding along the touch sensitive area away from the touched location.

2. (currently amended) The computer readable medium of claim **1**, wherein one function from the ~~plurality of functions~~ at least one function, when activated, causes the user interface to display icons representing different services or settings for a currently active application.

3. (previously presented) The computer readable medium of claim **2**, wherein the user interface is characterised in, that a selection of a preferred service or setting is done by tapping on a display icon corresponding to the preferred service or setting.

4. (currently amended) The computer readable medium of claim **1**, wherein one function from the ~~plurality of functions~~ at least one function, when activated, causes the user interface to display a keyboard and a text field.

5. (previously presented) The computer readable medium of claim **4**, wherein said text field is used for inputting and editing of text through said keyboard.

6. (currently amended) The computer readable medium of claim **1**, wherein one function from the ~~plurality of functions~~ at least one function, when activated, causes the user interface to display a list with a library of available applications and files on the mobile handheld computer unit.

7. (previously presented) The computer readable medium of claim **6**, wherein the user interface is characterised in, that a selection of an application or file is done by gliding the object along said touch sensitive area so that a representation of a desired one of said application or file is highlighted, raising said object from said touch sensitive area, and then tapping on said touch sensitive area.

8. (previously presented) The computer readable medium of claim **7**, wherein the user interface is characterised in, that at any given time said list presents only files or only applications, and that an area of said list presents a field through which said list can be changed from presenting files to presenting applications, or from presenting applications to presenting files.

9. (currently amended) The computer readable medium of claim **7**, wherein the user interface is characterised in, that, one item in said list is highlighted by a moveable marking, and the user interface enables list navigation whereby gliding the object along the touch sensitive area in a direction towards the top of said list or towards the bottom of said list causes said marking to move in the same direction without scrolling the list.

10. (currently amended) The computer readable medium of claim **9**, wherein the user interface is characterised in, that, if the number of applications or files in said list exceeds the number of applications or files that can be presented on said touch sensitive area as content, and if the object is (i) glided along said touch sensitive area to the top or bottom ~~position~~ of said touch sensitive area, then (ii) raised above said touch sensitive area, then (iii) replaced on said touch sensitive area, and then (iv) again glided along said touch sensitive area to the top or bottom of said touch sensitive area, said list navigation pages the content of said ~~touch sensitive area will be replaced~~ list up or down by one whole page.

11. (currently amended) The computer readable medium of claim **10**, wherein the user interface is characterised in, that if the object is raised from any first position on said touch sensitive area and then replaced on any second position on said touch sensitive area, said list navigation can be continued from said second position.

12. (currently amended) The computer readable medium of claim **1**, wherein the user interface is characterised in, that an active application, function, service or setting is ~~moved on~~ advanced one step by gliding the

object along the touch sensitive area from left to right, and that the active application, function, service or setting is closed or backed one step by gliding the object along the touch sensitive area from right to left.

13. (currently amended) The computer readable medium of claim **1**, wherein the user interface is characterised in, that said representations of said ~~plurality of functions~~ at least one function are located at the bottom of said touch sensitive area.

14. (previously presented) The computer readable medium of claim **1**, wherein the touch sensitive area is 2-3 inches in diagonal dimension.

15. (previously presented) An enclosure adapted to cover the mobile handheld computer unit according to Claim **1**, characterised in, that said enclosure is provided with an opening for said touch sensitive area.

16. (previously presented) The enclosure according to Claim **15**, characterised in, that said enclosure is removable and exchangeable.

17. (cancelled)

18. (currently amended) [[A]] The computer readable medium ~~according to Claim **17**~~ of claim **1**, characterised in, that said computer program ~~product~~ code is adapted to function as a shell upon an ~~operations~~ operating system.

19. – **47.** (cancelled)

REMARKS

Applicant has carefully studied the outstanding Office Action. The present amendment is intended to place the application in condition for allowance and is believed to overcome all of the objections and rejections made by the Examiner. Favorable reconsideration and allowance of the application are respectfully requested.

Applicant has cancelled claims **17** and **19** – **47**, and amended claims **1**, **2**, **4**, **6**, **9** - **13** and **18** to properly claim the present invention. No new matter has been introduced. Claims **1** – **16** and **18** are presented for examination.

In Paragraphs 3 and 4 of the Office Action, the Examiner has rejected claim **1** under 35 U.S.C. §102(e) as being anticipated by Nakajima et al., US Patent No. 6,346,935 ("Nakajima").

In Paragraphs 5 and 6 of the Office Action, the Examiner has rejected claims **2** – **11** and **14** – **18** under 35 U.S.C. §103(a) as being unpatentable over Nakajima in view of Rogue, "Palm Pilot: The Ultimate Guide, 2nd Edition ("Rogue"). Applicant has canceled claim **17** without acquiescence to the Examiner's reasons for rejection and respectfully submits that rejection of those claims is thus rendered moot.

In Paragraph 7 of the Office Action, the Examiner has rejected claims **12** and **13** under 35 U.S.C. §103(a) as being unpatentable over Nakajima in view of Rogue, and further in view of O'Rourke, US Patent No. 7,225,408 ("O'Rourke").

Distinctions between Claimed Invention and U.S. Patent No. 6,346,935 to Nakajima et al., Rogue, Palm Pilot: The Ultimate Guide, 2nd Edition, and U.S. Patent No. 7,225,408 to O'Rourke

Aspects of the subject invention concern a touch-based user interface with functionalities for running interactive applications using touch-based icons, for inputting text using a touch-based keypad, and for managing files using a touch-based file listing. User inputs include finger taps and movements. One such movement is a "rubbing" / "swiping" / "touch-and-glide" movement, whereby a finger touches a touch-sensitive screen at a location where an icon for a function is displayed, and then rubs / swipes / glides, along the touch screen away from the location without lifting the finger. The touch-and-glide movement of the subject claimed invention is illustrated in FIGS. 2, 7 and 10 of the original specification by a left-arrow and a thumb touching a touch-sensitive screen.

The touch-and-glide movement of the subject claimed invention is used to activate functions (original specification/ Abstract; page 2, lines 25 – 28; page 5, lines 24 – 27; FIG. 2; original claim **1**), and to scroll a selector forward and backward within a list to select a desired item in the list, and to page up and page down within a list (original specification/ page 3, lines 28 – page 4, line 2; page 7, lines 7 – 10; page 7, line 27 – page 9, line 14; FIGS. 7 and 10; original claims **7**, **9** and **10**). The touch-and-glide movement of the subject claimed invention activates a function that corresponds to the icon displayed at the touch point.

Nakajima teaches several touch pads for operating a notebook personal computer. The touch pads are designed efficiently so as to avoid waste of their touch-sensitive areas caused by raised frames

that surround the touch-sensitive areas. As shown in FIG. 13 of Nakajima, and described at col. 2, lines 52 – 65, for prior art touch pads, the regions of a touch-sensitive area that border the inner periphery of the frame, along a strip of width G, are blocked by the frame from access by a finger, F. As such, these border regions of the prior art touch-sensitive area are wasted.

The touch pads of Nakajima have frames with inner peripheries that are designed to enable a user to access border regions of the touch-sensitive areas. Examples of such designs are shown in FIGS. 5, 6 and 9 of Nakajima. A no-sensor area, denoted Ans in FIG. 9, separates an effective sensor area, denoted Ls in FIG. 9, from the inner periphery of frame 6E. Recesses and curvatures in the inner periphery of the frame make it possible for a finger to touch all portions of effective sensor area Ls, including the edges and corners thereof. Moreover, the inner periphery of frame 6E serves as a convenient guide, to assist the finger in moving to a desired edge and corner of effective sensor area Ls. In distinction, these edge and corner regions are inaccessible with the prior art touch pad shown in FIG. 13 of Nakajima.

The edge and corner regions of the touch-sensitive areas, when touched, trigger activation of functions corresponding to the touched regions. FIGS. 16 and 21 of Nakajima, and the description at col. 17, line 60 – col. 18, line 30, show an exemplary correspondence between border regions 2202 - 2207 of a touch-sensitive area 2101, and operations that they trigger when double-tapped.

Rogue is a user's guide for the PalmPilot device. Rogue teaches how to operate the PalmPilot's touch-based user interface, and the various functions that are available.

O'Rourke describes a medical information system and a user interface for medical staff to access, process and update patient record information via portable palmtop devices, and to transfer such information between portable devices. The user interface of O'Rourke is illustrated in FIGS. 9 – 20 of O'Rourke.

Response to Examiner's Arguments

In rejecting independent claim **1**, the Examiner, citing Nakajima col. 15, lines 1 – 15, has indicated that Nakajima teaches activating a function by an object touching a location corresponding to the function and then gliding along the touch sensitive area away from the location.

Applicant respectfully submits that the frame-guided movement of Nakajima is of a fundamentally different nature than the touch-and-glide movement of the subject claimed invention. The frame-guided movement of Nakajima glides over a non-touch sensitive portion of the screen. Specifically, as shown in FIG. 9 of Nakajima and described at col. 16, line 4 – page 17, line 17, the gliding movement occurs over the no-sensor area Ans. As recited by Nakajima at col. 9, line 55: "*Between the inner periphery of the frame 6E and the effective sensor area Ls, there is an area including no sensors, that is, the non-sensor area Ans.*" Gliding an object over the no-sensor area Ans ensures that the edges and corners of the effective sensor area Ls are accessible and not wasted, which is the first objective of Nakajima (Nakajima/ col. 2, lines 52 – 65; col. 16, lines 19 – 24).

The following table summarizes some of the relevant distinctions.

TABLE I: Partial list of distinctions between frame-guided movements of Nakajima and touch-and-glide movements of the claimed invention	
Frame-guided movement of Nakamura	**Touch-and-glide movement of the claimed invention**
Glide is over non-touch sensitive portion of screen	Glide is over touch-sensitive portion of screen
Glide followed by touch	Touch followed by glide
Glide is toward touch point	Glide is away from touch point
Glide is along periphery of touch-sensitive area	Glide is along interior of touch-sensitive area
Glide movement is guided by inner periphery of raised frame	Glide movement is unguided
Only the touch point is processed by the user interface	Both the touch point and the glide are processed by the user interface
Frame-guided touch has the same effect as a touch alone	Touch-and-glide has a different effect than a touch alone

In rejecting dependent claim **2**, the Examiner, citing Rogue, Figure 1.2, has indicated that Rogue teaches a function which, when activated, causes the user interface to display icons representing different services or setting for a currently active application. Applicant respectfully submits that the PalmPilot applications buttons is used to display icons representing installed programs, and does not relate to a currently active application. Moreover, the PalmPilot applications button is used to launch a not-currently active application.

In rejecting dependent claims **6** and **8**, the Examiner, citing Rogue, Sidebar 1, Categories, has indicated that Rogue teaches a function which, when activated, causes the user interface to display a list of available applications and files. Applicant respectfully submits that the PalmPilot category pages described in Rogue do not display files. They only display installed applications, as indicated by Rogue in Sidebar 1.

Moreover, Rogue does not describe changing the display from displaying only applications to displaying only files, and vice versa.

In rejecting dependent claim **9**, the Examiner, citing Rogue, Figure 1.4, has indicated that Rogue teaches a gliding input that causes a marking to move up and down a list without scrolling the list. Applicant respectfully submits that the PalmPilot menus, as described in Rogue, are navigated via tapping and not via gliding.

In rejecting dependent claims **10** and **11**, the Examiner, citing Nakajima, col. 14, lines 45 – 57, has indicated that Nakajima teaches a compound movement, used to advance an entire page of a list, by (i) gliding an object along a touch-sensitive area to the top or bottom of the touch-sensitive area, (ii) raising the object from the touch-sensitive area, (iii) replacing the object on the touch-sensitive area, and (iv) gliding the object again along the touch-sensitive area to the top of bottom of the touch-sensitive area. Applicant respectfully submits that Nakajima describes an up/down scroll function, which is not the glide-raise-replace-glide movement of the subject claimed invention. Moreover, the up/down scroll function causes a list to advance by one line, and not by an entire page. Applicant further respectfully submits that Nakajima does not describe a list navigation movement that continues when the object is (i) raised from a first position on the touch-sensitive area, and (ii) replaced at a second position of the touch-sensitive area.

In order to further clarify these distinctions, applicant has amended claim **10** to elaborately list the four stages of the compound glide-raise-replace-glide list navigation movement.

In rejecting dependent claim **12**, the Examiner, citing Nakajima, col. 14, lines 45 – 57 and O'Rourke, Figure 13, has indicated

that Nakajima and O'Rourke teach advancing an active application / function / service / setting forward and backward one step by gliding an object along a touch-sensitive area respectively from left to right and from right to left. Applicant respectfully submits that the forward and backward operations described in Nakajima and O'Rourke are performed by tapping on arrowheads, and not by gliding an object left to right, or right to left. Use of touch-based scroll bars is described in Rogue with reference to Figure 1.2: "*To scroll … tap one of the up/down triangle buttons on the scroll bar …*". Moreover, the cited location of Nakajima recites "*The double-headed arrow 18a … is a sign of an up/down scroll function … the user can understand … the region assigned the function …*"; i.e., tapping on sign 18a causes a scroll up.

The rejections of the claims **1** – **18** in paragraphs 3 - 7 of the Office Action will now be dealt with specifically.

As to amended independent claim **1** for a computer readable medium, applicant respectfully submits, as indicated hereinabove, that the limitation in claim **1** of

"*each function … being activated by an object touching the corresponding location and then gliding along the touch sensitive area away from the touched location*"

is neither shown nor suggested in Nakajima, Rogue or O'Rourke.

Additionally, as indicated hereinabove, the limitation in amended dependent claim **2** of

"*one function … when activated, causes the user interface to display icons representing different services or settings for a currently active application*"

is neither shown nor suggested in Nakajima, Rogue or O'Rourke.

Additionally, as indicated hereinabove, the limitation in amended dependent claim **6** of

"*one function … when activated, causes the user interface to display a list with a library of available applications and files on the mobile handheld computer unit*"

is neither shown nor suggested in Nakajima, Rogue or O'Rourke.

Additionally, as indicated hereinabove, the limitation in dependent claim **8** of

"*said list presents only files or only applications, and that an area of said list presents a field through which said list can be changed from presenting files to presenting applications, or from presenting applications to presenting files*"

is neither shown nor suggested in Nakajima, Rogue or O'Rourke.

Additionally, as indicated hereinabove, the limitation in amended dependent claim **9** of

"*list navigation whereby gliding the object along the touch sensitive area in a direction towards the top of said list or towards the bottom of said list causes said marking to move in the same direction without scrolling the list*"

is neither shown nor suggested in Nakajima, Rogue or O'Rourke.

Additionally, as indicated hereinabove, the limitation in amended dependent claim **10** of

"*if the object is (i) glided along said touch sensitive area to the top or bottom of said touch sensitive area, then (ii) raised above said touch sensitive area, then (iii) replaced on said touch sensitive area, and then (iv) again glided along said touch sensitive area to the top or bottom of said touch sensitive area, said list navigation pages the content of said list up or down by one whole page*"

is neither shown nor suggested in Nakajima, Rogue or O'Rourke.

Additionally, as indicated hereinabove, the limitation in amended dependent claim **11** of

"*if the object is raised from any first position on said touch sensitive area and then replaced on any second position on said touch sensitive area, said list navigation can be continued from said second position*"

is neither shown nor suggested in Nakajima, Rogue or O'Rourke.

Additionally, as indicated hereinabove, the limitation in amended dependent claim **12** of

"*an active application, function, service or setting is advanced one step by gliding the object along the touch sensitive area from left to right, and that the active application, function, service or setting is closed or backed one step by gliding the object along the touch sensitive area from right to left*"

is neither shown nor suggested in Nakajima, Rogue or O'Rourke.

Because claims **2** – **16** and **18** depend from claim **1** and include additional features, applicant respectfully submits that claims **2** – **16** and **18** are not anticipated or rendered obvious by Nakajima, Rogue, O'Rourke, or a combination of Nakajima, Rogue or O'Rourke.

Accordingly claims **1** – **16** and **18** are deemed to be allowable.

Support for Amended Claims in Original Specification

Dependent claim **10** has been amended to include the limitations of the object being (i) glided along the touch sensitive area to the top or bottom position of the touch sensitive area, then (ii) raised above said touch sensitive area, then (iii) replaced on said touch sensitive area, and then (iv) again glided along said touch sensitive area to the top or bottom of said touch sensitive area. These limitations are supported in the original specification at least at page 7, line 32 – page 8, line 10; and FIG. 9.

For the foregoing reasons, applicant respectfully submits that the applicable objections and rejections have been overcome and that the claims are in condition for allowance.

Respectfully submitted,

Dated: April 22, 2009

/Marc A. Berger/
Marc A. Berger
Reg. No. 44,029

P.O. Box 691
Soquel, CA 95073
(831) 426-8200

Electronic Patent Application Fee Transmittal	
Application Number:	10315250
Filing Date:	10-Dec-2002
Title of Invention:	User interface
First Named Inventor/Applicant Name:	Magnus Goertz
Filer:	Marc Aron Berger
Attorney Docket Number:	NEONODE.P004
Filed as Large Entity	

Utility under 35 USC 111(a) Filing Fees

Description	Fee Code	Quantity	Amount	Sub-Total in USD($)
Basic Filing:				
Pages:				
Claims:				
Miscellaneous-Filing:				
Petition:				
Petition fee- 37 CFR 1.17(h) (Group III)	1464	1	130	130
Patent-Appeals-and-Interference:				
Post-Allowance-and-Post-Issuance:				
Extension-of-Time:				

Description	Fee Code	Quantity	Amount	Sub-Total in USD($)
Miscellaneous:				
			Total in USD ($)	**130**

Electronic Acknowledgement Receipt

EFS ID:	5194866
Application Number:	10315250
International Application Number:	
Confirmation Number:	1226
Title of Invention:	User interface
First Named Inventor/Applicant Name:	Magnus Goertz
Customer Number:	75660
Filer:	Marc Aron Berger
Filer Authorized By:	
Attorney Docket Number:	NEONODE.P004
Receipt Date:	22-APR-2009
Filing Date:	10-DEC-2002
Time Stamp:	04:29:42
Application Type:	Utility under 35 USC 111(a)

Payment information:

Submitted with Payment	yes
Payment Type	Credit Card
Payment was successfully received in RAM	$130
RAM confirmation Number	5840
Deposit Account	
Authorized User	

File Listing:

Document Number	Document Description	File Name	File Size(Bytes)/ Message Digest	Multi Part /.zip	Pages (if appl.)

1		NEONODE_P004_Amendment_22_April_2009.pdf	93970 6e949083a93ff831ca0790fb0ce228745ce2b4e7	yes	15

	Multipart Description/PDF files in .zip description		
	Document Description	**Start**	**End**
	Amendment/Req. Reconsideration-After Non-Final Reject	1	1
	Claims	2	5
	Applicant Arguments/Remarks Made in an Amendment	6	15

Warnings:

Information:

2	Fee Worksheet (PTO-06)	fee-info.pdf	29822 9a7cb8d7b48f77e24a7dc5281634c6abc6c2ec40	no	2

Warnings:

Information:

Total Files Size (in bytes):	123792

This Acknowledgement Receipt evidences receipt on the noted date by the USPTO of the indicated documents, characterized by the applicant, and including page counts, where applicable. It serves as evidence of receipt similar to a Post Card, as described in MPEP 503.

New Applications Under 35 U.S.C. 111
If a new application is being filed and the application includes the necessary components for a filing date (see 37 CFR 1.53(b)-(d) and MPEP 506), a Filing Receipt (37 CFR 1.54) will be issued in due course and the date shown on this Acknowledgement Receipt will establish the filing date of the application.

National Stage of an International Application under 35 U.S.C. 371
If a timely submission to enter the national stage of an international application is compliant with the conditions of 35 U.S.C. 371 and other applicable requirements a Form PCT/DO/EO/903 indicating acceptance of the application as a national stage submission under 35 U.S.C. 371 will be issued in addition to the Filing Receipt, in due course.

New International Application Filed with the USPTO as a Receiving Office
If a new international application is being filed and the international application includes the necessary components for an international filing date (see PCT Article 11 and MPEP 1810), a Notification of the International Application Number and of the International Filing Date (Form PCT/RO/105) will be issued in due course, subject to prescriptions concerning national security, and the date shown on this Acknowledgement Receipt will establish the international filing date of the application.

PTO/SB/06 (07-06)
Approved for use through 1/31/2007. OMB 0651-0032
U.S. Patent and Trademark Office; U.S. DEPARTMENT OF COMMERCE
Under the Paperwork Reduction Act of 1995, no persons are required to respond to a collection of information unless it displays a valid OMB control number.

PATENT APPLICATION FEE DETERMINATION RECORD Substitute for Form PTO-875	Application or Docket Number 10/315,250	Filing Date 12/10/2002	☐ To be Mailed

APPLICATION AS FILED – PART I

	(Column 1)	(Column 2)	SMALL ENTITY ☒		OR	OTHER THAN SMALL ENTITY	
FOR	NUMBER FILED	NUMBER EXTRA	RATE ($)	FEE ($)		RATE ($)	FEE ($)
☐ BASIC FEE (37 CFR 1.16(a), (b), or (c))	N/A	N/A	N/A			N/A	
☐ SEARCH FEE (37 CFR 1.16(k), (i), or (m))	N/A	N/A	N/A			N/A	
☐ EXAMINATION FEE (37 CFR 1.16(o), (p), or (q))	N/A	N/A	N/A			N/A	
TOTAL CLAIMS (37 CFR 1.16(i))	minus 20 =	*	X $ =		OR	X $ =	
INDEPENDENT CLAIMS (37 CFR 1.16(h))	minus 3 =	*	X $ =			X $ =	
☐ APPLICATION SIZE FEE (37 CFR 1.16(s))	If the specification and drawings exceed 100 sheets of paper, the application size fee due is $250 ($125 for small entity) for each additional 50 sheets or fraction thereof. See 35 U.S.C. 41(a)(1)(G) and 37 CFR 1.16(s).						
☐ MULTIPLE DEPENDENT CLAIM PRESENT (37 CFR 1.16(j))							
* If the difference in column 1 is less than zero, enter "0" in column 2.			TOTAL			TOTAL	

APPLICATION AS AMENDED – PART II

AMENDMENT	04/22/2009	(Column 1) CLAIMS REMAINING AFTER AMENDMENT		(Column 2) HIGHEST NUMBER PREVIOUSLY PAID FOR	(Column 3) PRESENT EXTRA	SMALL ENTITY RATE ($)	ADDITIONAL FEE ($)	OR	OTHER THAN SMALL ENTITY RATE ($)	ADDITIONAL FEE ($)
	Total (37 CFR 1.16(i))	* 17	Minus	** 47	= 0	X $26 =	0	OR	X $ =	
	Independent (37 CFR 1.16(h))	* 1	Minus	***8	= 0	X $110 =	0	OR	X $ =	
	☐ Application Size Fee (37 CFR 1.16(s))									
	☐ FIRST PRESENTATION OF MULTIPLE DEPENDENT CLAIM (37 CFR 1.16(j))							OR		
						TOTAL ADD'L FEE	0	OR	TOTAL ADD'L FEE	

AMENDMENT		(Column 1) CLAIMS REMAINING AFTER AMENDMENT		(Column 2) HIGHEST NUMBER PREVIOUSLY PAID FOR	(Column 3) PRESENT EXTRA	RATE ($)	ADDITIONAL FEE ($)	OR	RATE ($)	ADDITIONAL FEE ($)
	Total (37 CFR 1.16(i))	*	Minus	**	=	X $ =		OR	X $ =	
	Independent (37 CFR 1.16(h))	*	Minus	***	=	X $ =		OR	X $ =	
	☐ Application Size Fee (37 CFR 1.16(s))									
	☐ FIRST PRESENTATION OF MULTIPLE DEPENDENT CLAIM (37 CFR 1.16(j))							OR		
						TOTAL ADD'L FEE		OR	TOTAL ADD'L FEE	

* If the entry in column 1 is less than the entry in column 2, write "0" in column 3.
** If the "Highest Number Previously Paid For" IN THIS SPACE is less than 20, enter "20".
*** If the "Highest Number Previously Paid For" IN THIS SPACE is less than 3, enter "3".
The "Highest Number Previously Paid For" (Total or Independent) is the highest number found in the appropriate box in column 1.

Legal Instrument Examiner:
/MYRTLE B. LEIGH/

This collection of information is required by 37 CFR 1.16. The information is required to obtain or retain a benefit by the public which is to file (and by the USPTO to process) an application. Confidentiality is governed by 35 U.S.C. 122 and 37 CFR 1.14. This collection is estimated to take 12 minutes to complete, including gathering, preparing, and submitting the completed application form to the USPTO. Time will vary depending upon the individual case. Any comments on the amount of time you require to complete this form and/or suggestions for reducing this burden, should be sent to the Chief Information Officer, U.S. Patent and Trademark Office, U.S. Department of Commerce, P.O. Box 1450, Alexandria, VA 22313-1450. DO NOT SEND FEES OR COMPLETED FORMS TO THIS ADDRESS. **SEND TO: Commissioner for Patents, P.O. Box 1450, Alexandria, VA 22313-1450.**

If you need assistance in completing the form, call 1-800-PTO-9199 and select option 2.

UNITED STATES PATENT AND TRADEMARK OFFICE

UNITED STATES DEPARTMENT OF COMMERCE
United States Patent and Trademark Office
Address: COMMISSIONER FOR PATENTS
P.O. Box 1450
Alexandria, Virginia 22313-1450
www.uspto.gov

APPLICATION NO.	FILING DATE	FIRST NAMED INVENTOR	ATTORNEY DOCKET NO.	CONFIRMATION NO.
10/315,250	12/10/2002	Magnus Goertz	NEONODE.P004	1226

75660 7590 12/23/2008

Soquel Group, LLC
P.O. Box 691
Soquel, CA 95073

EXAMINER	
PITARO, RYAN F	
ART UNIT	PAPER NUMBER
2174	
MAIL DATE	DELIVERY MODE
12/23/2008	PAPER

Please find below and/or attached an Office communication concerning this application or proceeding.

The time period for reply, if any, is set in the attached communication.

Office Action Summary	Application No.	Applicant(s)	
	10/315,250	GOERTZ, MAGNUS	
	Examiner	Art Unit	
	RYAN F. PITARO	2174	

-- The MAILING DATE of this communication appears on the cover sheet with the correspondence address --

Period for Reply

A SHORTENED STATUTORY PERIOD FOR REPLY IS SET TO EXPIRE 3 MONTH(S) OR THIRTY (30) DAYS, WHICHEVER IS LONGER, FROM THE MAILING DATE OF THIS COMMUNICATION.

- Extensions of time may be available under the provisions of 37 CFR 1.136(a). In no event, however, may a reply be timely filed after SIX (6) MONTHS from the mailing date of this communication.
- If NO period for reply is specified above, the maximum statutory period will apply and will expire SIX (6) MONTHS from the mailing date of this communication.
- Failure to reply within the set or extended period for reply will, by statute, cause the application to become ABANDONED (35 U.S.C. § 133). Any reply received by the Office later than three months after the mailing date of this communication, even if timely filed, may reduce any earned patent term adjustment. See 37 CFR 1.704(b).

Status

1)☒ Responsive to communication(s) filed on *15 October 2008*.

2a)☐ This action is **FINAL**. 2b)☒ This action is non-final.

3)☐ Since this application is in condition for allowance except for formal matters, prosecution as to the merits is closed in accordance with the practice under *Ex parte Quayle*, 1935 C.D. 11, 453 O.G. 213.

Disposition of Claims

4)☒ Claim(s) *1-18* is/are pending in the application.

4a) Of the above claim(s) _____ is/are withdrawn from consideration.

5)☐ Claim(s) _____ is/are allowed.

6)☒ Claim(s) *1-18* is/are rejected.

7)☐ Claim(s) _____ is/are objected to.

8)☐ Claim(s) _____ are subject to restriction and/or election requirement.

Application Papers

9)☐ The specification is objected to by the Examiner.

10)☐ The drawing(s) filed on _____ is/are: a)☐ accepted or b)☐ objected to by the Examiner.

Applicant may not request that any objection to the drawing(s) be held in abeyance. See 37 CFR 1.85(a).

Replacement drawing sheet(s) including the correction is required if the drawing(s) is objected to. See 37 CFR 1.121(d).

11)☐ The oath or declaration is objected to by the Examiner. Note the attached Office Action or form PTO-152.

Priority under 35 U.S.C. § 119

12)☐ Acknowledgment is made of a claim for foreign priority under 35 U.S.C. § 119(a)-(d) or (f).

a)☐ All b)☐ Some * c)☐ None of:

1.☐ Certified copies of the priority documents have been received.

2.☐ Certified copies of the priority documents have been received in Application No. _____.

3.☐ Copies of the certified copies of the priority documents have been received in this National Stage application from the International Bureau (PCT Rule 17.2(a)).

* See the attached detailed Office action for a list of the certified copies not received.

Attachment(s)

1) ☒ Notice of References Cited (PTO-892)
2) ☐ Notice of Draftsperson's Patent Drawing Review (PTO-948)
3) ☐ Information Disclosure Statement(s) (PTO/SB/08) Paper No(s)/Mail Date _____.
4) ☐ Interview Summary (PTO-413) Paper No(s)/Mail Date. _____ .
5) ☐ Notice of Informal Patent Application
6) ☐ Other: _____.

Response to Amendment

1. This action is in response to the amendment filed 10/15/2008. In the amendment claims 1-18 were amended. This action is non-final.

Continued Examination Under 37 CFR 1.114

2. A request for continued examination under 37 CFR 1.114, including the fee set forth in 37 CFR 1.17(e), was filed in this application after final rejection. Since this application is eligible for continued examination under 37 CFR 1.114, and the fee set forth in 37 CFR 1.17(e) has been timely paid, the finality of the previous Office action has been withdrawn pursuant to 37 CFR 1.114. Applicant's submission filed on 10/15/2008 has been entered.

Claim Rejections - 35 USC § 102

3. The following is a quotation of the appropriate paragraphs of 35 U.S.C. 102 that form the basis for the rejections under this section made in this Office action:

> A person shall be entitled to a patent unless –
>
> (e) the invention was described in (1) an application for patent, published under section 122(b), by another filed in the United States before the invention by the applicant for patent or (2) a patent granted on an application for patent by another filed in the United States before the invention by the applicant for patent, except that an international application filed under the treaty defined in section 351(a) shall have the effects for purposes of this subsection of an application filed in the United States only if the international application designated the United States and was published under Article 21(2) of such treaty in the English language.

4. Claim 1 is rejected under 35 U.S.C. 102(e) as being anticipated by Nakajima et al ("Nakajima", 6,346,935).

As per claim 1, Nakajima teaches a computer readable medium storing a computer program with computer program code, which, when read by a mobile handheld computer unit, allows the computer to present a user interface for the mobile handheld computer unit, the user interface comprising: a touch sensitive area in which representations of a plurality of functions are displayed (Column 15 lines 1-9, *function signs*), and each function of said plurality of functions being mapped to a corresponding location in the touch sensitive area at which the representation of the function is displayed (Column 15 lines 1-9, *stops moving finger*), and being activated by an object touching the corresponding location and then gliding along the touch sensitive area away from the location (Column 15 lines 1-15, *stops moving finger then glides finger to lightly press surface*).

Claim Rejections - 35 USC § 103

5. The following is a quotation of 35 U.S.C. 103(a) which forms the basis for all obviousness rejections set forth in this Office action:

> (a) A patent may not be obtained though the invention is not identically disclosed or described as set forth in section 102 of this title, if the differences between the subject matter sought to be patented and the prior art are such that the subject matter as a whole would have been obvious at the time the invention was made to a person having ordinary skill in the art to which said subject matter pertains. Patentability shall not be negatived by the manner in which the invention was made.

6. Claims 2-11,14-18 rejected under 35 U.S.C. 103(a) as being unpatentable over Nakajima et al ("Nakajima", 6,346,935) in view of Rogue ("Rogue", Palm Pilot: The Ultimate Guide, 2nd Edition).

As per claim 2, Nakajima fails to particularly disclose a function to display a plurality of functions. However, Rogue teaches a computer readable medium of claim 1, wherein one function from the plurality of functions, when activated, causes the user interface to display icons representing different services or settings for a currently active application (Figure 1.2, *Tap the application button to display your application launching screen*).Therefore it would have been obvious to an artisan at the time of the invention to combine the teaching of Rogue with the medium of Nakajima. Motivation to do so would have been to provide a way to reduce screen clutter and only access the applications when needed.

As per claim 3, Nakajima-Rogue teaches a computer readable medium of claim 2, wherein the user interface is characterised in, that a selection of a preferred service or setting is done by tapping on a display icon corresponding to the preferred service or setting (Nakajima, Column 18 lines 30-40, tap).

As per claim 4, Nakajima-Rogue teaches a computer readable medium of claim 1, wherein one function from the plurality of functions, when activated, causes the user interface to display a keyboard and a text field (Figure 2.5, power stroke up, Figure 2.6).

As per claim 5, Nakajima-Rogue teaches a wherein said text field is used for inputting and editing of text through said keyboard (Nakajima, Figure 2.6).

As per claim 6, Nakajima-Rogue teaches a computer readable medium of claim 1, wherein one function from the plurality of functions, when activated, causes the user interface to display a list with a library of available applications and files on the mobile handheld computer unit (Rogue, Sidebar 1, Categories).

As per claim 7, Nakajima-Rogue teaches a computer readable medium of claim 6, wherein the user interface is characterised in, that a selection of an application or file is done by gliding the object along said touch sensitive area so that a representation of a desired one of said application or file is highlighted, raising said object from said touch sensitive area, and then tapping on said touch sensitive area (Nakajima, Column 18 lines 40-56).

As per claim 8, Nakajima-Rogue teaches a computer readable medium of claim 7, wherein the user interface is characterised in, that at any given time said list presents only files or only applications, and that an area of said list presents a field through which the said list can be changed from presenting files to presenting applications, or from presenting applications to presenting files (Rogue, Sidebar 1, Categories).

As per claim 9, Nakajima-Rogue teaches a computer readable medium of claim 7, wherein the user interface is characterised in, that, one item in said list is highlighted by a moveable marking, and gliding the object along the touch sensitive area in a direction towards the top of said list or towards the bottom of said list, causes said marking to move in the same direction without scrolling the list (Rogue, Figure 1.4, using the menu).

As per claim 10, Nakajima-Rogue teaches a computer readable medium of claim 9, wherein the user interface is characterised in, that, if the number of applications or files in said list exceeds the number of applications or files that can be presented on said touch sensitive area as content, and if the object is glided along said touch sensitive area to the top or bottom position of said touch sensitive area, then raised, replaced on said touch sensitive area, and again glided along said touch sensitive area to the top or bottom of said touch sensitive area, the content of said touch sensitive area will be replaced one whole page (Nakajima, Column 14 lines 45-57).

As per claim 11, Nakajima-Rogue teaches a computer readable medium of claim 10, wherein the user interface is characterised in, that if the object is raised from any first position on said touch sensitive area and then replaced on any second position on said touch sensitive area, said navigation can be continued from said second position (Nakajima, Column 14 lines 45-57).

As per claim 14, while Nakajima-Rogue-O'Rourke fails to teach a touch sensitive area is 2-3 inches. OFFICIAL NOTICE is taken that screen sizes vary and screens with a touch sensitive area of 2-3 inches diagonally is well known in the art. Therefore it would have been obvious to an artisan at the time of the invention to combine the screen size with the medium of Nakajima-Rogue. Motivation to do so would have been to provide adequate size to operate the touch screen while keeping it small enough to fit in a pocket.

As per claim 15, Nakajima-Rogue teaches a enclosure adapted to cover the mobile handheld computer unit according to Claim 1, characterised in, that said enclosure is provided with an opening for said touch sensitive area (Rogue, Figure 1.1).

As per claim 16, Nakajima-Rogue fails to teach an enclosure is removable and exchangeable. OFFICIAL NOTICE is taken that an enclosure is removable and exchangeable is well known in the art. Therefore it would have been obvious to an

artisan at the time of the invention to combine the exchangeable enclosure with the medium of Nakajima-Rogue. Motivation to do so would have been to provide a way to style your mobile device so that it can be personalized to a user's taste.

As per claim 17, Nakajima-Rogue teaches a a computer readable medium, with a computer program product stored therein, characterised in, that said computer program product comprises computer readable code, which, when read by a computer, will make it possible for said computer to present a user interface according to Claim 1 (Rogue, 1.1 Palm Pilot Basics).

As per claim 18, Nakajima-Rogue teaches a computer readable medium according to Claim 17, characterised in, that said computer program product is adapted to function as a shell upon an operations system (Rogue, 1.1 Palm Pilot Basics).

7. Claims 12 and 13 are rejected under 35 U.S.C. 103(a) as being unpatentable over Nakajima et al ("Nakajima", 6,346,935) in view of Rogue ("Rogue", Palm Pilot: The Ultimate Guide, 2nd Edition) in view of O'Rourke (O'Rourke, US 7,225,408).

As per claim 12, Nakajima-Rogue teaches a computer readable medium of claim 1, wherein the user interface is characterized in, that an active application, function, service or setting is moved on one step by gliding the object along the touch sensitive area from left to right (Nakajima, Column 14 lines 45-57). However, Nakajima-Rogue fails to distinctly point out closing or backing one step. However, O'Rourke teaches that the active application, function, service or setting is closed or backed one step (Figure 13, right and left arrows). Therefore it would have been obvious to an artisan at the time of the invention to combine the glide functionality with the forward and backward functionality of O'Rourke. Motivation to do so would have been to provide an easy way to traverse the GUI.

As per claim 13, Nakajima-Rogue-O'Rourke teaches a computer readable medium of claim 1, wherein the user interface is characterised in, that said representations of said plurality of functions are located at the bottom of said touch sensitive area (O'Rourke, Figure 13, icons at bottom right) .

Response to Arguments

Applicant's arguments with respect to claims 1-18 have been considered but are moot in view of the new ground(s) of rejection.

Conclusion

Any inquiry concerning this communication or earlier communications from the examiner should be directed to RYAN F. PITARO whose telephone number is (571)272-4071. The examiner can normally be reached on 9:00am - 5:30pm Mondays through Fridays.

If attempts to reach the examiner by telephone are unsuccessful, the examiner's supervisor, Stephen Hong can be reached on 571-272-4124. The fax phone number for the organization where this application or proceeding is assigned is 571-273-8300.

Information regarding the status of an application may be obtained from the Patent Application Information Retrieval (PAIR) system. Status information for published applications may be obtained from either Private PAIR or Public PAIR. Status information for unpublished applications is available through Private PAIR only. For more information about the PAIR system, see http://pair-direct.uspto.gov. Should you have questions on access to the Private PAIR system, contact the Electronic Business Center (EBC) at 866-217-9197 (toll-free). If you would like assistance from a USPTO Customer Service Representative or access to the automated information system, call 800-786-9199 (IN USA OR CANADA) or 571-272-1000.

/R. F. P./
Examiner, Art Unit 2174

/Stephen S. Hong/
Supervisory Patent Examiner, Art Unit 2178

Notice of References Cited	Application/Control No. 10/315,250	Applicant(s)/Patent Under Reexamination GOERTZ, MAGNUS	
	Examiner RYAN F. PITARO	Art Unit 2174	Page 1 of 1

U.S. PATENT DOCUMENTS

*		Document Number Country Code-Number-Kind Code	Date MM-YYYY	Name	Classification
*	A	US-7,225,408	05-2007	O'Rourke, Kevin	715/743
*	B	US-2002/0171691	11-2002	Currans et al.	345/864
*	C	US-6,346,935	02-2002	Nakajima et al.	345/173
*	D	US-6,085,204	07-2000	Chijiwa et al.	715/246
*	E	US-5,053,758	10-1991	Cornett et al.	345/174
*	F	US-7,286,063	10-2007	Gauthey et al.	341/34
	G	US-			
	H	US-			
	I	US-			
	J	US-			
	K	US-			
	L	US-			
	M	US-			

FOREIGN PATENT DOCUMENTS

*		Document Number Country Code-Number-Kind Code	Date MM-YYYY	Country	Name	Classification
	N					
	O					
	P					
	Q					
	R					
	S					
	T					

NON-PATENT DOCUMENTS

*		Include as applicable: Author, Title Date, Publisher, Edition or Volume, Pertinent Pages)
	U	Venoila et al, T-Cube: A Fast, Self Disclosing Pen-Based Alphabet, 1994, pages 265-270
	V	Karlson et al, AppLens and LaunchTile:Two Designs for One-Handed Thumb Use on Small Devices, CHI 2005
	W	Dulberg et al, An Imprecise Mouse Gesture for the FAst Activation of Controls, Interact 1999, pages 1-8
	X	Rogue, Palm Pilot: The Ultimate Guide, 2nd Edition,1998, O'Reilly and Associates, Inc. pages 1-17

*A copy of this reference is not being furnished with this Office action. (See MPEP § 707.05(a).)
Dates in MM-YYYY format are publication dates. Classifications may be US or foreign.

Index of Claims	Application/Control No.	Applicant(s)/Patent Under Reexamination
	10315250	GOERTZ, MAGNUS
	Examiner	Art Unit
	Ryan F Pitaro	2174

✓	Rejected	-	Cancelled	N	Non-Elected	A	Appeal
=	Allowed	÷	Restricted	I	Interference	O	Objected

☐ Claims renumbered in the same order as presented by applicant ☐ CPA ☐ T.D. ☐ R.1.47

CLAIM		DATE								
Final	Original	11/09/2007	06/23/2008	12/21/2008						
	1	✓	✓	✓						
	2	✓	✓	✓						
	3	✓	✓	✓						
	4	✓	✓	✓						
	5	✓	✓	✓						
	6	✓	✓	✓						
	7	✓	✓	✓						
	8	✓	✓	✓						
	9	✓	✓	✓						
	10	✓	✓	✓						
	11	✓	✓	✓						
	12	✓	✓	✓						
	13	✓	✓	✓						
	14	✓	✓	✓						
	15	✓	✓	✓						
	16	✓	✓	✓						
	17	✓	✓	✓						
	18	✓	✓	✓						
	19		÷	N						
	20		÷	N						
	21		÷	N						
	22		÷	N						
	23		÷	N						
	24		÷	N						
	25		÷	N						
	26		÷	N						
	27		÷	N						
	28		÷	N						
	29		÷	N						
	30		÷	N						
	31		÷	N						
	32		÷	N						
	33		÷	N						
	34		÷	N						
	35		÷	N						
	36		÷	N						

Index of Claims	Application/Control No.	Applicant(s)/Patent Under Reexamination
	10315250	GOERTZ, MAGNUS
	Examiner	Art Unit
	Ryan F Pitaro	2174

✓	Rejected	-	Cancelled	N	Non-Elected	A	Appeal
=	Allowed	÷	Restricted	I	Interference	O	Objected

☐ Claims renumbered in the same order as presented by applicant ☐ CPA ☐ T.D. ☐ R.1.47

CLAIM		DATE								
Final	Original	11/09/2007	06/23/2008	12/21/2008						
	37		÷	N						
	38		÷	N						
	39		÷	N						
	40		÷	N						
	41		÷	N						
	42		÷	N						
	43		÷	N						
	44		÷	N						
	45		÷	N						
	46		÷	N						
	47		÷	N						
	48									
	49									
	50									
	51									
	52									
	53									
	54									
	55									
	56									
	57									
	58									
	59									
	60									
	61									
	62									
	63									
	64									
	65									

Search Notes	Application/Control No.	Applicant(s)/Patent Under Reexamination
	10315250	GOERTZ, MAGNUS
	Examiner	Art Unit
	Ryan F Pitaro	2174

SEARCHED			
Class	Subclass	Date	Examiner
Update	Search	11/8/2007	RFP
Update	Search	6/17/2008	RFP
Update	Search	12/21/2008	RFP

SEARCH NOTES		
Search Notes	Date	Examiner
Update Search	11/8/2007	RFP
Update Search	6/17/2008	RFP
EAST	12/21/2008	RFP
Internet	12/21/2008	RFP
Safari Online Books	12/21/2008	RFP
IEEE	12/21/2008	RFP
ACM	12/21/2008	

INTERFERENCE SEARCH			
Class	Subclass	Date	Examiner

EAST Search History

Ref #	Hits	Search Query	DBs	Default Operator	Plurals	Time Stamp
S1	2	"7441196".pn.	US-PGPUB; USPAT; EPO; JPO; DERWENT	OR	OFF	2008/12/08 17:03
S2	394	swipe with screen	US-PGPUB; USPAT; EPO; JPO; DERWENT	OR	ON	2008/12/08 17:05
S3	606	(glide swipe) with screen	US-PGPUB; USPAT; EPO; JPO; DERWENT	OR	ON	2008/12/08 17:05
S4	2	"7286063".pn.	US-PGPUB; USPAT; EPO; JPO; DERWENT	OR	ON	2008/12/08 17:10
S5	263	("20010003845" | "20010012286" | "20010016947" | "20010034647" | "20010042002" | "20010044751" | "20010049824" | "20010051903" | "20020007309" | "20020010642" | "20020016750" | "20020029339" | "20020032782" | "20020035174" | "20020038256" | "20020038259" | "20020042914" | "20020042921" | "20020049631" | "20020056098" | "20020059590" | "20020067376" | "20020077177" | "20020078006" | "20020078453" | "20020098834" | "20020116292" | "20020116320" | "20020166122" | "20030046182" | "20030074661" | "20030095525" | "20030126607" | "20030140017" | "20030146940" | "20030149628" | "20030182195" | "20040003412" | "20040098747" | "20040103439" | "20040117831" | "20040128137" | "20040133848" | "20040148625" | "20040204116" |	US-PGPUB; USPAT; USOCR	OR	OFF	2008/12/08 17:12

| | | |

		"6388714" | "6396531" | "6397387" | "6401132" | "6407779" | "6411307" | "6411337" | "6415270" | "6417873" | "6418441" | "6421066" | "6421071" | "6421724" | "6438540" | "6445398" | "6460181" | "6476825" | "6477575" | "6484149" | "6487189" | "6487586" | "6490555" | "6509913" | "6516311" | "6522342" | "6532312" | "6535888" | "6570582" | "6571279" | "6583800" | "6606103" | "6606280" | "6606347").PN. OR ("6608633" | "6615247" | "6615248" | "6618039" | "6631523" | "6636246" | "6647373" | "6662224" | "6680714" | "6684062" | "6692358" | "6704727" | "6711552" | "6714534" | "6728731" | "6769989" | "6804786" | "6826572" | "6829646" | "6857102" | "6868525" | "6907556" | "6925595" | "6928610" | "6938073" | "6973669" | "6978263" | "7013435" | "7020845" | "7051281" | "7174512" | "7293276" | "7383515").PN.				
S6	112	touch with slide with function	US-PGPUB; USPAT; USOCR	OR	ON	2008/12/08 17:14
S7	13	("4366475" | "4686332" | "4821030" | "4914624" | "5402151" | "5563632" | "5596346" | "5638060" | "5687331" | "5736974" | "5736976" | "5761485" | "5838973").PN.	US-PGPUB; USPAT; USOCR	OR	OFF	2008/12/08 17:18
S8	168267	object near3 type	US-PGPUB; USPAT; USOCR	OR	OFF	2008/12/08 17:21
S9	5	(file item object) near3 type with open near3 respective	US-PGPUB; USPAT; USOCR	OR	OFF	2008/12/08 17:21
S10	905	open$3 with different with program	US-PGPUB; USPAT; USOCR	OR	OFF	2008/12/08 17:23
S11	2	multiple near3 file near3 selection with open	US-PGPUB; USPAT; USOCR	OR	ON	2008/12/08 17:29
S12	11	applying with command with (plurality multiple) with files	US-PGPUB; USPAT; USOCR	OR	ON	2008/12/08 17:29

S13	29188	(flick stroke) with (open application command)	US-PGPUB; USPAT; EPO; JPO; DERWENT	OR	OFF	2008/12/10 16:52
S14	229	(flick) with (open application command)	US-PGPUB; USPAT; EPO; JPO; DERWENT	OR	ON	2008/12/10 16:54
S15	127	(flick) with (open application command) and @ay<="2002"	US-PGPUB; USPAT; EPO; JPO; DERWENT	OR	ON	2008/12/10 16:56
S16	5	(flick) with (open application command) and @ay<="2002" and "715"/$.ccls.	US-PGPUB; USPAT; EPO; JPO; DERWENT	OR	ON	2008/12/10 16:56
S17	39	(flick) and @ay<="2002" and "715"/$.ccls.	US-PGPUB; USPAT; EPO; JPO; DERWENT	OR	ON	2008/12/10 16:57
S18	961	(flick gesture) and @ay<="2002" and "715"/$.ccls.	US-PGPUB; USPAT; EPO; JPO; DERWENT	OR	ON	2008/12/10 16:58
S19	2324	(flick gesture slide) and @ay<="2002" and "715"/$.ccls.	US-PGPUB; USPAT; EPO; JPO; DERWENT	OR	ON	2008/12/10 16:58
S20	77	(flick gesture slide) and @ay<="2002" and "715"/702,864.ccls.	US-PGPUB; USPAT; EPO; JPO; DERWENT	OR	ON	2008/12/10 16:59

S21	6585	finger near3 (flick gesture slide) and @ay<="2002"	US-PGPUB; USPAT; EPO; JPO; DERWENT	OR	ON	2008/12/10 17:07
S22	86	finger near3 (flick gesture slide) and @ay<="2002" and "715"/$.ccls.	US-PGPUB; USPAT; EPO; JPO; DERWENT	OR	ON	2008/12/10 17:07
S23	0	"5543591,5943052,5907327,4686332".pn.	US-PGPUB; USPAT; EPO; JPO; DERWENT	OR	ON	2008/12/10 17:14
S24	8	("5543591" "5943052" "5907327" "4686332").pn.	US-PGPUB; USPAT; EPO; JPO; DERWENT	OR	ON	2008/12/10 17:15
S25	93647	(glide flick touch swipe) with screen	US-PGPUB; USPAT; EPO; JPO; DERWENT	OR	ON	2008/12/17 13:18
S26	13098	(glide flick touch swipe) with screen with (applications functions)	US-PGPUB; USPAT; EPO; JPO; DERWENT	OR	ON	2008/12/17 13:20
S27	88	(glide flick touch swipe) with screen with (applications functions) and "715"/$.ccls. and @AY="2002"	US-PGPUB; USPAT; EPO; JPO; DERWENT	OR	ON	2008/12/17 13:20
S28	430	(glide flick touch swipe) with screen with (applications functions) and "715"/$.ccls. and @AY<="2002"	US-PGPUB; USPAT; EPO; JPO; DERWENT	OR	ON	2008/12/17 13:20

S29	0	(glide flick swipe) with screen with (applications functions) and "715"/$.ccls. and @AY<="2002"	US-PGPUB; USPAT; EPO; JPO; DERWENT	OR	ON	2008/12/17 13:21
S30	11	(glide flick swipe) with screen and "715"/$.ccls. and @AY<="2002"	US-PGPUB; USPAT; EPO; JPO; DERWENT	OR	ON	2008/12/17 13:21
S31	219	(glide flick gesture swipe) with screen and "715"/$.ccls. and @AY<="2002"	US-PGPUB; USPAT; EPO; JPO; DERWENT	OR	ON	2008/12/17 13:22
S32	299	(glide flick swipe) with screen and @AY<="2002"	US-PGPUB; USPAT; EPO; JPO; DERWENT	OR	ON	2008/12/17 13:25
S33	8	(glide flick swipe) with screen with icon and @AY<="2002"	US-PGPUB; USPAT; EPO; JPO; DERWENT	OR	ON	2008/12/17 13:26
S34	16	("20010011308" | "20030142138" | "20040034801" | "20050253817" | "20050253817" | "20050264833" | "5821933" | "5907327" | "6633310").PN.	US-PGPUB; USPAT; EPO; JPO; DERWENT	OR	ON	2008/12/17 13:30
S35	451	(glide flick swipe) with finger and @AY<="2002"	US-PGPUB; USPAT; EPO; JPO; DERWENT	OR	ON	2008/12/17 13:32
S36	3	(glide flick swipe) with finger and @AY<="2002" and "715"/$.ccls.	US-PGPUB; USPAT; EPO; JPO; DERWENT	OR	ON	2008/12/17 13:32

S37	13	("5250929" | "5568604" | "5579036" | "5612719" | "5661476" | "5748185" | "5767457" | "5883617" | "5928304" | "5943043" | "5943044" | "5995083" | "6049328").PN.	US-PGPUB; USPAT; USOCR	OR	OFF	2008/12/17 14:01
S38	918	715/716.ccls.	US-PGPUB; USPAT; USOCR	OR	OFF	2008/12/17 15:38
S39	7	715/716.ccls. and dvd near menu	US-PGPUB; USPAT; USOCR	OR	OFF	2008/12/17 15:38
S40	9	715/716.ccls. and dvd near menu	US-PGPUB; USPAT; USOCR	OR	ON	2008/12/17 15:38
S41	334	715/716.ccls. and dvd	US-PGPUB; USPAT; USOCR	OR	ON	2008/12/17 15:47
S42	461	715/716.ccls. and menu	US-PGPUB; USPAT; USOCR	OR	ON	2008/12/17 15:47
S43	39	715/716.ccls. and menu and theme	US-PGPUB; USPAT; USOCR	OR	ON	2008/12/17 15:48
S44	243	715/716.ccls. and menu and effects	US-PGPUB; USPAT; USOCR	OR	ON	2008/12/17 15:52
S45	4	715/716.ccls. and menu with theme	US-PGPUB; USPAT; USOCR	OR	ON	2008/12/17 15:53
S46	1	"7200836".pn.	US-PGPUB; USPAT; USOCR	OR	ON	2008/12/17 15:56
S47	1	"20080120546".pn.	US-PGPUB; USPAT; USOCR	OR	ON	2008/12/17 15:57
S48	433	715/864.ccls.	US-PGPUB; USPAT; USOCR	OR	ON	2008/12/21 23:26
S49	60	715/864.ccls. and keyboard and back and icons and files	US-PGPUB; USPAT; USOCR	OR	ON	2008/12/21 23:27
S50	25	715/864.ccls. and keyboard and back and icons and files and removable	US-PGPUB; USPAT; USOCR	OR	ON	2008/12/21 23:27
S51	42	715/864.ccls. and keyboard and icons and files and @ay<="2002"	US-PGPUB; USPAT; USOCR	OR	ON	2008/12/21 23:28

12/22/08 10:38:01 AM
C:\Documents and Settings\RPitaro\My Documents\EAST\Workspaces\10315250.wsp

UNITED STATES PATENT AND TRADEMARK OFFICE

UNITED STATES DEPARTMENT OF COMMERCE
United States Patent and Trademark Office
Address: COMMISSIONER FOR PATENTS
P.O. Box 1450
Alexandria, Virginia 22313-1450
www.uspto.gov

APPLICATION NO.	FILING DATE	FIRST NAMED INVENTOR	ATTORNEY DOCKET NO.	CONFIRMATION NO.
10/315,250	12/10/2002	Magnus Goertz	NEONODE.P004	1226

75660 7590 10/15/2008

Soquel Group, LLC
P.O. Box 691
Soquel, CA 95073

EXAMINER	
PITARO, RYAN F	
ART UNIT	PAPER NUMBER
2174	

MAIL DATE	DELIVERY MODE
10/15/2008	PAPER

Please find below and/or attached an Office communication concerning this application or proceeding.

The time period for reply, if any, is set in the attached communication.

Advisory Action Before the Filing of an Appeal Brief	**Application No.** 10/315,250	**Applicant(s)** GOERTZ, MAGNUS	
	Examiner RYAN F. PITARO	**Art Unit** 2174	

--The MAILING DATE of this communication appears on the cover sheet with the correspondence address --

THE REPLY FILED 08 September 2008 FAILS TO PLACE THIS APPLICATION IN CONDITION FOR ALLOWANCE.

1. ☐ The reply was filed after a final rejection, but prior to or on the same day as filing a Notice of Appeal. To avoid abandonment of this application, applicant must timely file one of the following replies: (1) an amendment, affidavit, or other evidence, which places the application in condition for allowance; (2) a Notice of Appeal (with appeal fee) in compliance with 37 CFR 41.31; or (3) a Request for Continued Examination (RCE) in compliance with 37 CFR 1.114. The reply must be filed within one of the following time periods:
   a) ☐ The period for reply expires _____months from the mailing date of the final rejection.
   b) ☐ The period for reply expires on: (1) the mailing date of this Advisory Action, or (2) the date set forth in the final rejection, whichever is later. In no event, however, will the statutory period for reply expire later than SIX MONTHS from the mailing date of the final rejection.

   Examiner Note: If box 1 is checked, check either box (a) or (b). ONLY CHECK BOX (b) WHEN THE FIRST REPLY WAS FILED WITHIN TWO MONTHS OF THE FINAL REJECTION. See MPEP 706.07(f).

Extensions of time may be obtained under 37 CFR 1.136(a). The date on which the petition under 37 CFR 1.136(a) and the appropriate extension fee have been filed is the date for purposes of determining the period of extension and the corresponding amount of the fee. The appropriate extension fee under 37 CFR 1.17(a) is calculated from: (1) the expiration date of the shortened statutory period for reply originally set in the final Office action; or (2) as set forth in (b) above, if checked. Any reply received by the Office later than three months after the mailing date of the final rejection, even if timely filed, may reduce any earned patent term adjustment. See 37 CFR 1.704(b).

NOTICE OF APPEAL

2. ☐ The Notice of Appeal was filed on _____. A brief in compliance with 37 CFR 41.37 must be filed within two months of the date of filing the Notice of Appeal (37 CFR 41.37(a)), or any extension thereof (37 CFR 41.37(e)), to avoid dismissal of the appeal. Since a Notice of Appeal has been filed, any reply must be filed within the time period set forth in 37 CFR 41.37(a).

AMENDMENTS

3. ☒ The proposed amendment(s) filed after a final rejection, but prior to the date of filing a brief, will not be entered because
   (a) ☒ They raise new issues that would require further consideration and/or search (see NOTE below);
   (b) ☐ They raise the issue of new matter (see NOTE below);
   (c) ☐ They are not deemed to place the application in better form for appeal by materially reducing or simplifying the issues for appeal; and/or
   (d) ☐ They present additional claims without canceling a corresponding number of finally rejected claims.

   NOTE: *The newly added claim amendments would require further search and consideration as discussed in an interview*. (See 37 CFR 1.116 and 41.33(a)).
4. ☐ The amendments are not in compliance with 37 CFR 1.121. See attached Notice of Non-Compliant Amendment (PTOL-324).
5. ☐ Applicant's reply has overcome the following rejection(s): _____.
6. ☐ Newly proposed or amended claim(s) _____ would be allowable if submitted in a separate, timely filed amendment canceling the non-allowable claim(s).
7. ☒ For purposes of appeal, the proposed amendment(s): a) ☒ will not be entered, or b) ☐ will be entered and an explanation of how the new or amended claims would be rejected is provided below or appended.
   The status of the claim(s) is (or will be) as follows:
   Claim(s) allowed: _____.
   Claim(s) objected to: _____.
   Claim(s) rejected: _____.
   Claim(s) withdrawn from consideration: _____.

AFFIDAVIT OR OTHER EVIDENCE

8. ☐ The affidavit or other evidence filed after a final action, but before or on the date of filing a Notice of Appeal will not be entered because applicant failed to provide a showing of good and sufficient reasons why the affidavit or other evidence is necessary and was not earlier presented. See 37 CFR 1.116(e).
9. ☐ The affidavit or other evidence filed after the date of filing a Notice of Appeal, but prior to the date of filing a brief, will not be entered because the affidavit or other evidence failed to overcome all rejections under appeal and/or appellant fails to provide a showing a good and sufficient reasons why it is necessary and was not earlier presented. See 37 CFR 41.33(d)(1).
10. ☐ The affidavit or other evidence is entered. An explanation of the status of the claims after entry is below or attached.

REQUEST FOR RECONSIDERATION/OTHER

11. ☐ The request for reconsideration has been considered but does NOT place the application in condition for allowance because: _____.
12. ☐ Note the attached Information *Disclosure Statement*(s). (PTO/SB/08) Paper No(s). _____
13. ☐ Other: _____.

/Stephen S. Hong/
Supervisory Patent Examiner, Art Unit 2178

Attorney's Docket No.: NEONODE.P004 *PATENT*

IN THE UNITED STATES PATENT AND TRADEMARK OFFICE

In Re Patent Application of:	)	
	)	Examiner: Ryan F. Pitaro
Magnus Goertz	)	
	)	Art Unit: 2174
Application No: 10/315,250	)	
	)	
Filed: December 10, 2002	)	
	)	
For: USER INTERFACE FOR MOBILE HANDHELD COMPUTER UNIT	)	
	)	

Mail Stop AMENDMENT
Commissioner for Patents
P. O. Box 1450
Alexandria, VA 22313-1450

AMENDMENT AND RESPONSE TO OFFICE ACTION

UNDER 37 C.F.R. §1.116

Sir:

In response to the Office Action dated July 11, 2008, applicant respectfully requests that the above-identified application be amended as follows:

DO NOT ENTER: /R.P./

10/06/2008

Doc code: RCEX
Doc description: Request for Continued Examination (RCE)

PTO/SB/30EFS (09-08)
Approved for use through 10/31/2008. OMB 0651-0031
U.S. Patent and Trademark Office; U.S. DEPARTMENT OF COMMERCE
Under the Paperwork Reduction Act of 1995, no persons are required to respond to a collection of information unless it contains a valid OMB control number.

REQUEST FOR CONTINUED EXAMINATION(RCE)TRANSMITTAL
(Submitted Only via EFS-Web)

Application Number	10/315,250	Filing Date	2002-12-10	Docket Number (if applicable)	NEONODE.P004	Art Unit	2174
First Named Inventor	Magnus Goertz			Examiner Name	Ryan F. Pitaro		

This is a Request for Continued Examination (RCE) under 37 CFR 1.114 of the above-identified application.
Request for Continued Examination (RCE) practice under 37 CFR 1.114 does not apply to any utility or plant application filed prior to June 8, 1995, or to any design application. The Instruction Sheet for this form is located at WWW.USPTO.GOV

SUBMISSION REQUIRED UNDER 37 CFR 1.114

Note: If the RCE is proper, any previously filed unentered amendments and amendments enclosed with the RCE will be entered in the order in which they were filed unless applicant instructs otherwise. If applicant does not wish to have any previously filed unentered amendment(s) entered, applicant must request non-entry of such amendment(s).

☒ Previously submitted. If a final Office action is outstanding, any amendments filed after the final Office action may be considered as a submission even if this box is not checked.

☐ Consider the arguments in the Appeal Brief or Reply Brief previously filed on _____

☐ Other _____

☐ Enclosed

☐ Amendment/Reply

☐ Information Disclosure Statement (IDS)

☐ Affidavit(s)/ Declaration(s)

☐ Other _____

MISCELLANEOUS

☐ Suspension of action on the above-identified application is requested under 37 CFR 1.103(c) for a period of months _____
(Period of suspension shall not exceed 3 months; Fee under 37 CFR 1.17(i) required)

☐ Other _____

FEES

☐ **The RCE fee under 37 CFR 1.17(e) is required by 37 CFR 1.114 when the RCE is filed.**
The Director is hereby authorized to charge any underpayment of fees, or credit any overpayments, to Deposit Account No _____

SIGNATURE OF APPLICANT, ATTORNEY, OR AGENT REQUIRED

☒ Patent Practitioner Signature

☐ Applicant Signature

PTO/SB/30EFS (09-08)
Approved for use through 10/31/2008. OMB 0651-0031
U.S. Patent and Trademark Office; U.S. DEPARTMENT OF COMMERCE
Under the Paperwork Reduction Act of 1995, no persons are required to respond to a collection of information unless it contains a valid OMB control number.

Signature of Registered U.S. Patent Practitioner			
Signature	/Marc A. Berger/	Date (YYYY-MM-DD)	2008-10-15
Name	Marc A. Berger	Registration Number	44029

This collection of information is required by 37 CFR 1.114. The information is required to obtain or retain a benefit by the public which is to file (and by the USPTO to process) an application. Confidentiality is governed by 35 U.S.C. 122 and 37 CFR 1.11 and 1.14. This collection is estimated to take 12 minutes to complete, including gathering, preparing, and submitting the completed application form to the USPTO. Time will vary depending upon the individual case. Any comments on the amount of time you require to complete this form and/or suggestions for reducing this burden, should be sent to the Chief Information Officer, U.S. Patent and Trademark Office, U.S. Department of Commerce, P.O. Box 1450, Alexandria, VA 22313-1450.

If you need assistance in completing the form, call 1-800-PTO-9199 and select option 2.

Privacy Act Statement

The Privacy Act of 1974 (P.L. 93-579) requires that you be given certain information in connection with your submission of the attached form related to a patent application or patent. Accordingly, pursuant to the requirements of the Act, please be advised that: (1) the general authority for the collection of this information is 35 U.S.C. 2(b)(2); (2) furnishing of the information solicited is voluntary; and (3) the principal purpose for which the information is used by the U.S. Patent and Trademark Office is to process and/or examine your submission related to a patent application or patent. If you do not furnish the requested information, the U.S. Patent and Trademark Office may not be able to process and/or examine your submission, which may result in termination of proceedings or abandonment of the application or expiration of the patent.

The information provided by you in this form will be subject to the following routine uses:

1. The information on this form will be treated confidentially to the extent allowed under the Freedom of Information Act (5 U.S.C. 552) and the Privacy Act (5 U.S.C. 552a). Records from this system of records may be disclosed to the Department of Justice to determine whether the Freedom of Information Act requires disclosure of these record s.

2. A record from this system of records may be disclosed, as a routine use, in the course of presenting evidence to a court, magistrate, or administrative tribunal, including disclosures to opposing counsel in the course of settlement negotiations.

3. A record in this system of records may be disclosed, as a routine use, to a Member of Congress submitting a request involving an individual, to whom the record pertains, when the individual has requested assistance from the Member with respect to the subject matter of the record.

4. A record in this system of records may be disclosed, as a routine use, to a contractor of the Agency having need for the information in order to perform a contract. Recipients of information shall be required to comply with the requirements of the Privacy Act of 1974, as amended, pursuant to 5 U.S.C. 552a(m).

5. A record related to an International Application filed under the Patent Cooperation Treaty in this system of records may be disclosed, as a routine use, to the International Bureau of the World Intellectual Property Organization, pursuant to the Patent Cooperation Treaty.

6. A record in this system of records may be disclosed, as a routine use, to another federal agency for purposes of National Security review (35 U.S.C. 181) and for review pursuant to the Atomic Energy Act (42 U.S.C. 218(c)).

7. A record from this system of records may be disclosed, as a routine use, to the Administrator, General Services, or his/her designee, during an inspection of records conducted by GSA as part of that agency's responsibility to recommend improvements in records management practices and programs, under authority of 44 U.S.C. 2904 and 2906. Such disclosure shall be made in accordance with the GSA regulations governing inspection of records for this purpose, and any other relevant (i.e., GSA or Commerce) directive. Such disclosure shall not be used to make determinations about individuals.

8. A record from this system of records may be disclosed, as a routine use, to the public after either publication of the application pursuant to 35 U.S.C. 122(b) or issuance of a patent pursuant to 35 U.S.C. 151. Further, a record may be disclosed, subject to the limitations of 37 CFR 1.14, as a routine use, to the public if the record was filed in an application which became abandoned or in which the proceedings were terminated and which application is referenced by either a published application, an application open to public inspections or an issued patent.

9. A record from this system of records may be disclosed, as a routine use, to a Federal, State, or local law enforcement agency, if the USPTO becomes aware of a violation or potential violation of law or regulation.

Electronic Patent Application Fee Transmittal	
Application Number:	10315250
Filing Date:	10-Dec-2002
Title of Invention:	User interface
First Named Inventor/Applicant Name:	Magnus Goertz
Filer:	Marc Aron Berger
Attorney Docket Number:	NEONODE.P004
Filed as Large Entity	

Utility under 35 USC 111(a) Filing Fees

Description	Fee Code	Quantity	Amount	Sub-Total in USD($)
Basic Filing:				
Pages:				
Claims:				
Miscellaneous-Filing:				
Petition:				
Patent-Appeals-and-Interference:				
Post-Allowance-and-Post-Issuance:				
Extension-of-Time:				

Description	Fee Code	Quantity	Amount	Sub-Total in USD($)
Miscellaneous:				
Request for continued examination	1801	1	810	810
		Total in USD ($)		**810**

Electronic Acknowledgement Receipt	
EFS ID:	4121130
Application Number:	10315250
International Application Number:	
Confirmation Number:	1226
Title of Invention:	User interface
First Named Inventor/Applicant Name:	Magnus Goertz
Customer Number:	75660
Filer:	Marc Aron Berger
Filer Authorized By:	
Attorney Docket Number:	NEONODE.P004
Receipt Date:	15-OCT-2008
Filing Date:	10-DEC-2002
Time Stamp:	17:33:26
Application Type:	Utility under 35 USC 111(a)

Payment information:

Submitted with Payment	yes
Payment Type	Credit Card
Payment was successfully received in RAM	$810
RAM confirmation Number	2961
Deposit Account	
Authorized User	

File Listing:

Document Number	Document Description	File Name	File Size(Bytes)/ Message Digest	Multi Part /.zip	Pages (if appl.)

1	Request for Continued Examination (RCE)	NeonodeP004RCE.pdf	697150 ca2986bf4145018741de9c2f319d642ff82a057d	no	3
Warnings:					
Information:					
2	Fee Worksheet (PTO-06)	fee-info.pdf	29864 65d0586c07529883cd3a52375b89fd6bba39fc41	no	2
Warnings:					
Information:					
		Total Files Size (in bytes):	727014		

This Acknowledgement Receipt evidences receipt on the noted date by the USPTO of the indicated documents, characterized by the applicant, and including page counts, where applicable. It serves as evidence of receipt similar to a Post Card, as described in MPEP 503.

New Applications Under 35 U.S.C. 111
If a new application is being filed and the application includes the necessary components for a filing date (see 37 CFR 1.53(b)-(d) and MPEP 506), a Filing Receipt (37 CFR 1.54) will be issued in due course and the date shown on this Acknowledgement Receipt will establish the filing date of the application.

National Stage of an International Application under 35 U.S.C. 371
If a timely submission to enter the national stage of an international application is compliant with the conditions of 35 U.S.C. 371 and other applicable requirements a Form PCT/DO/EO/903 indicating acceptance of the application as a national stage submission under 35 U.S.C. 371 will be issued in addition to the Filing Receipt, in due course.

New International Application Filed with the USPTO as a Receiving Office
If a new international application is being filed and the international application includes the necessary components for an international filing date (see PCT Article 11 and MPEP 1810), a Notification of the International Application Number and of the International Filing Date (Form PCT/RO/105) will be issued in due course, subject to prescriptions concerning national security, and the date shown on this Acknowledgement Receipt will establish the international filing date of the application.

UNITED STATES PATENT AND TRADEMARK OFFICE

UNITED STATES DEPARTMENT OF COMMERCE
United States Patent and Trademark Office
Address: COMMISSIONER FOR PATENTS
P.O. Box 1450
Alexandria, Virginia 22313-1450
www.uspto.gov

APPLICATION NUMBER	FILING OR 371(C) DATE	FIRST NAMED APPLICANT	ATTY. DOCKET NO./TITLE
10/315,250	12/10/2002	Magnus Goertz	NEONODE. P004

CONFIRMATION NO. 1226

75660
Soquel Group, LLC
P.O. Box 691
Soquel, CA 95073

POA ACCEPTANCE LETTER

OC000000032006069

Date Mailed: 09/11/2008

NOTICE OF ACCEPTANCE OF POWER OF ATTORNEY

This is in response to the Power of Attorney filed 09/03/2008.

The Power of Attorney in this application is accepted. Correspondence in this application will be mailed to the above address as provided by 37 CFR 1.33.

/sleutchit/

Office of Data Management, Application Assistance Unit (571) 272-4000, or (571) 272-4200, or 1-888-786-0101

UNITED STATES PATENT AND TRADEMARK OFFICE

UNITED STATES DEPARTMENT OF COMMERCE
United States Patent and Trademark Office
Address: COMMISSIONER FOR PATENTS
P.O. Box 1450
Alexandria, Virginia 22313-1450
www.uspto.gov

APPLICATION NUMBER	FILING OR 371(C) DATE	FIRST NAMED APPLICANT	ATTY. DOCKET NO./TITLE
10/315,250	12/10/2002	Magnus Goertz	3682-32

CONFIRMATION NO. 1226

60956
Professional Patent Solutions
P.O. BOX 654
HERZELIYA PITUACH, 46105
ISRAEL

POWER OF ATTORNEY NOTICE

OC000000032006022

Date Mailed: 09/11/2008

NOTICE REGARDING CHANGE OF POWER OF ATTORNEY

This is in response to the Power of Attorney filed 09/03/2008.

- The Power of Attorney to you in this application has been revoked by the assignee who has intervened as provided by 37 CFR 3.71. Future correspondence will be mailed to the new address of record(37 CFR 1.33).

/sleutchit/

Office of Data Management, Application Assistance Unit (571) 272-4000, or (571) 272-4200, or 1-888-786-0101

OIPE
SEP 10 2008
PATENT & TRADEMARK OFFICE

AF/FFW

PTO/SB/81 (07-08)
Approved for use through 12/31/2008. OMB 0651-0035
U.S. Patent and Trademark Office; U.S. DEPARTMENT OF COMMERCE
Under the Paperwork Reduction Act of 1995, no persons are required to respond to a collection of information unless it displays a valid OMB control number.

POWER OF ATTORNEY OR REVOCATION OF POWER OF ATTORNEY WITH A NEW POWER OF ATTORNEY AND CHANGE OF CORRESPONDENCE ADDRESS

Application Number	10/315,250
Filing Date	December 10, 2002
First Named Inventor	Magnus Goertz
Title	USER INTERFACE
Art Unit	2174
Examiner Name	Pizzo, Ryan F.
Attorney Docket Number	NEONODE.P004

I hereby revoke all previous powers of attorney given in the above-identified application.

☐ A Power of Attorney is submitted herewith.

OR

☒ I hereby appoint Practitioner(s) associated with the following Customer Number as my/our attorney(s) or agent(s) to prosecute the application identified above, and to transact all business in the United States Patent and Trademark Office connected therewith: **75660**

OR

☐ I hereby appoint Practitioner(s) named below as my/our attorney(s) or agent(s) to prosecute the application identified above, and to transact all business in the United States Patent and Trademark Office connected therewith:

Practitioner(s) Name	Registration Number

Please recognize or change the correspondence address for the above-identified application to:

☒ The address associated with the above-mentioned Customer Number.

OR

☐ The address associated with Customer Number:

OR

☐	Firm or Individual Name				
Address					
City		State		Zip	
Country					
Telephone		Email			

I am the:

☐ Applicant/Inventor.

OR

☒ Assignee of record of the entire interest. See 37 CFR 3.71.
Statement under 37 CFR 3.73(b) (Form PTO/SB/96) submitted herewith or filed on _____.

SIGNATURE of Applicant or Assignee of Record

Signature		Date	28 August 2008
Name	Per Bystedt	Telephone	+46 8 678 1850
Title and Company	CEO, Neonode		

NOTE: Signatures of all the inventors or assignees of record of the entire interest or their representative(s) are required. Submit multiple forms if more than one signature is required, see below*.

☐ *Total of _____ forms are submitted.

This collection of information is required by 37 CFR 1.31, 1.32 and 1.33. The information is required to obtain or retain a benefit by the public which is to file (and by the USPTO to process) an application. Confidentiality is governed by 35 U.S.C. 122 and 37 CFR 1.11 and 1.14. This collection is estimated to take 3 minutes to complete, including gathering, preparing, and submitting the completed application form to the USPTO. Time will vary depending upon the individual case. Any comments on the amount of time you require to complete this form and/or suggestions for reducing this burden, should be sent to the Chief Information Officer, U.S. Patent and Trademark Office, U.S. Department of Commerce, P.O. Box 1450, Alexandria, VA 22313-1450. DO NOT SEND FEES OR COMPLETED FORMS TO THIS ADDRESS. **SEND TO: Commissioner for Patents, P.O. Box 1450, Alexandria, VA 22313-1450.**

If you need assistance in completing the form, call 1-800-PTO-9199 and select option 2.

sis HP LASERJET-FAX 2008 Aug 28 12:15

OIPE IAP10
SEP 10 2008
PATENT & TRADEMARK OFFICE

PTO/SB/96 (08-08)
Approved for use through 08/31/2008. OMB 0651-0031
U.S. Patent and Trademark Office; U.S. DEPARTMENT OF COMMERCE
Under the Paperwork Reduction Act of 1995, no persons are required to respond to a collection of information unless it displays a valid OMB control number.

STATEMENT UNDER 37 CFR 3.73(b)

Applicant/Patent Owner: Neonode AB

Application No./Patent No.: 10/315,250 Filed/Issue Date: December 10, 2002

Entitled: USER INTERFACE

Neonode AB, a corporation
(Name of Assignee) (Type of Assignee, e.g., corporation, partnership, university, government agency, etc.)

states that it is:

1. ☑ the assignee of the entire right, title, and interest; or

2. ☐ an assignee of less than the entire right, title and interest
(The extent (by percentage) of its ownership interest is _____ %)

in the patent application/patent identified above by virtue of either:

A. ☐ An assignment from the inventor(s) of the patent application/patent identified above. The assignment was recorded in the United States Patent and Trademark Office at Reel _____, Frame _____, or for which a copy thereof is attached.

OR

B. ☑ A chain of title from the inventor(s), of the patent application/patent identified above, to the current assignee as follows:

1. From: Magnus Goertz To: Neonode Sweden AB
The document was recorded in the United States Patent and Trademark Office at
Reel 018163, Frame 0611, or for which a copy thereof is attached.

2. From: Neonode Sweden AB To: Neonode AB
The document was recorded in the United States Patent and Trademark Office at
Reel 018137, Frame 0448, or for which a copy thereof is attached.

3. From: _____ To: _____
The document was recorded in the United States Patent and Trademark Office at
Reel _____, Frame _____, or for which a copy thereof is attached.

☐ Additional documents in the chain of title are listed on a supplemental sheet.

☑ As required by 37 CFR 3.73(b)(1)(i), the documentary evidence of the chain of title from the original owner to the assignee was, or concurrently is being, submitted for recordation pursuant to 37 CFR 3.11.

[NOTE: A separate copy (*i.e.*, a true copy of the original assignment document(s)) must be submitted to Assignment Division in accordance with 37 CFR Part 3, to record the assignment in the records of the USPTO. See MPEP 302.08]

The undersigned (whose title is supplied below) is authorized to act on behalf of the assignee.

_____ Signature	28 August 2008 Date
Per Bystedt Printed or Typed Name	+46 8 678 1850 Telephone Number
CEO, Neonode Title	

This collection of information is required by 37 CFR 3.73(b). The information is required to obtain or retain a benefit by the public which is to file (and by the USPTO to process) an application. Confidentiality is governed by 35 U.S.C. 122 and 37 CFR 1.11 and 1.14. This collection is estimated to take 12 minutes to complete, including gathering, preparing, and submitting the completed application form to the USPTO. Time will vary depending upon the individual case. Any comments on the amount of time you require to complete this form and/or suggestions for reducing this burden, should be sent to the Chief Information Officer, U.S. Patent and Trademark Office, U.S. Department of Commerce, P.O. Box 1450, Alexandria, VA 22313-1450. DO NOT SEND FEES OR COMPLETED FORMS TO THIS ADDRESS. **SEND TO: Commissioner for Patents, P.O. Box 1450, Alexandria, VA 22313-1450.**

If you need assistance in completing the form, call 1-800-PTO-9199 and select option 2.

2008 Aug 28 12:14 HP LASERJET-FAX s13

Attorney's Docket No.: NEONODE.P004 *PATENT*

IN THE UNITED STATES PATENT AND TRADEMARK OFFICE

In Re Patent Application of:	)	
	)	Examiner: Ryan F. Pitaro
Magnus Goertz	)	
	)	Art Unit: 2174
Application No: 10/315,250	)	
	)	
Filed: December 10, 2002	)	
	)	
For: USER INTERFACE FOR MOBILE HANDHELD COMPUTER UNIT	)	
	)	

Mail Stop AMENDMENT
Commissioner for Patents
P. O. Box 1450
Alexandria, VA 22313-1450

AMENDMENT AND RESPONSE TO OFFICE ACTION

UNDER 37 C.F.R. §1.116

Sir:

In response to the Office Action dated July 11, 2008, applicant respectfully requests that the above-identified application be amended as follows:

IN THE DESCRIPTION:

Please amend the specification as follows.

Page 1, ninth full paragraph:

Since the users have gotten used to small handheld units, it is hard to move towards larger units. This has led to foldable keyboards, different kinds [[if]] of joy sticks and different kinds of touch sensitive displays and pads intended to help in providing a user interface that is suitable for small handheld ~~compute~~ computer units.

Page 2, first full paragraph:

It is a problem to provide a user-friendly interface that is adapted to handle a large amount of information and different kinds of traditional computer-related applications on a small handheld computer unit.

Page 3, sixth full paragraph:

In order to provide a task and file management in a user interface for a handheld mobile computer, the present invention teaches that, if the third function is activated, the display area is adapted to display a list with a library of available applications and files on the computer [[unit]] unit. A selection of an application will start the application, and a selection of a file will open the file in an application intended for the file.

Page 7, fifth full paragraph:

It should [[b]] be understood that all lists in the computer unit, such as a list of contact information in an address book, a

list of e-mail messages in a mailbox, or a telephone log, can be managed in the above described manner.

Page 7, sixth full paragraph:

The list 231 can be adapted to present only files or only applications. In this case, the top area of the list 231 can present a field 233 through which the content [[if]] <u>of</u> the list 231 can be altered. If the list only presents files, then the field 233 can display a representation of a task manager and a selection of the field 233 will cause the list 231 to alter to present only applications, and if the list 231 only presents applications, then the field 233 displays a representation of a file manager and a selection of the field 233 will cause the list 231 to alter and present only files.

Page 7, eighth full paragraph:

Figure 9 shows that if the number of applications and/or files in the list 231 exceeds the number of applications and/or files that can be presented on the display area 3, and if the object 4 is moved to the top or bottom position of the display area, then lifted, replaced on the display area, and then again moved to the top or bottom of the display area, then the content of the display area will be replaced one whole page, meaning that if the object 4 is positioned N at the bottom 3b of the display area 3, then lifted, replaced on the display area 3, and then again moved M to the bottom 3b of the display area 3, then the content 31 of the display area 3 will be replaced P by the following applications and/or files 32 in the list 231. In the same way, but not shown in the figure, if the object is ~~position~~ <u>positioned</u> at the top of the display area, then lifted, replaced on the display area 3, and then again moved to the top of the

display area, the content of the display area will be replaced by the preceding applications and/or files in the list.

Publication No. US 2004/0109013 A1, paragraph [0069]:

As shown in figure 13, the present invention relates to a user interface for a hand held mobile unit that preferably can be manageable with one hand. Hence the present invention teaches that the user interface is adapted to a touch sensitive area [[I]] 1 with a size that is in the order of 2-3 inches, meaning the diagonal distance W between two corners of the touch sensitive area 1.

IN THE CLAIMS:

Please substitute the following claims for the pending claims with the same number:

1. (currently amended) A computer readable medium storing a computer program with computer program code, which, when read by a mobile handheld computer unit, allows the computer to present a user interface for the mobile handheld computer unit, the user interface comprising:

a touch sensitive area ~~that is simultaneously divided into a menu area and a display area, the mobile handheld computer unit being adapted to run several applications simultaneously, and to present an active application on top of any other application on said display area, characterised in, that:~~

~~said menu area simultaneously presents~~ in which representations of a ~~first function that is a general application dependent function, a second function that is a keyboard function, and a third function that is a task and file manager~~ plurality of functions are displayed, and

each function of said ~~first, second, and third functions simultaneously represented in said menu area~~ plurality of functions being mapped to a corresponding location in the touch sensitive area at which the representation of the function is displayed, and being activated by ~~the single step of a blunt~~ an object touching the corresponding location and then gliding along the touch sensitive area away from the location ~~moving in a direction from a starting point that is the representation of the corresponding one of said first, second, and third functions in said menu area to said display area being detected by~~

~~said touch sensitive area, thereby allowing low precision navigation of the user interface using the blunt object, so that the user interface can be operated by one hand, where the blunt object is a finger~~.

2. (currently amended) The computer readable medium of claim **1**, wherein one function from the plurality of functions, when ~~the mobile handheld computer unit runs an operating system, the user interface is characterised in, that, if said first function is~~ activated, causes the user interface ~~is adapted~~ to display icons representing different services or settings ~~depending on the current~~ for a currently active application~~, that one of said icons always represents a "help" service, regardless of application, and that, if no application is current active on the mobile handheld computer unit, said icons are adapted to represent services or settings of the operating system of the mobile handheld computer unit~~.

3. (currently amended) The computer readable medium of claim **2**, wherein the user interface is characterised in, that a selection of a preferred service or setting is done by tapping on a ~~corresponding~~ display icon corresponding to the preferred service or setting.

4. (currently amended) The computer readable medium of claim **1**, wherein ~~the user interface is characterised in,~~

~~- that, if said second~~ one function from the plurality of functions, when [[is]] activated, ~~said display area is adapted~~ causes the user interface to display a keyboard and a text field~~,~~

~~- that, if a text passage in said active application is highlighted, said text passage is displayed in said text field for editing~~

~~through said keyboard and that said highlighted test passage is replaced by said edited text passage when said second function is deactivated, and~~

~~- that, if no text passage in said active application is highlighted, said text field is available for inputting and editing of text through said keyboard~~.

5. (currently amended) The computer readable medium of claim **4**, wherein ~~the user interface is characterised in, that if no text passage in said active application is highlighted,~~ said text field is used for inputting and editing of text through said keyboard~~, then~~

~~- said first function can be activated, or~~

~~- said second function can be closed, in which a choice of saving or deleting said inputted text is given, where the choice of saving said inputted text results in an activation of said first function,~~

~~in which said first function will present services or settings available for said inputted text~~.

6. (currently amended) The computer readable medium of claim **1**, wherein ~~the user interface is characterised in, that, if said third~~ <u>one</u> function <u>from the plurality of functions, when</u> [[is]] activated, ~~said display area is adapted~~ <u>causes the user interface</u> to display a list with a library of available applications and files on the mobile handheld computer unit~~,~~ ~~that a selection of an application will start said application, and that a selection of a file will open said file in an application intended for said file~~.

7. (currently amended) The computer readable medium of claim **6**, wherein the user interface is characterised in, that a selection of an application or file is done by ~~moving~~ <u>gliding</u> the ~~blunt~~ object <u>along said</u>

touch sensitive area so that a representation of a desired one of said application or file is highlighted, ~~removing~~ raising said object from said touch sensitive area, and then tapping on said touch sensitive area~~, and that said desired one of said application or file is highlighted by placing some kind of marking on said representation of said application or file~~.

8. (currently amended) The computer readable medium of claim **7**, wherein the user interface is characterised in, that at any given time said list ~~is adapted to present~~ presents only ~~said~~ files or only ~~said~~ applications, and that ~~a top~~ an area of said list presents a field through which ~~the content of~~ said list can be ~~altered~~ changed from presenting files to presenting applications, or from presenting applications to presenting files~~, that, if said list only presents files, said field displays a representation of a task manager and a selection of said field will cause said list to alter to present only applications, and that, if said list only presents applications, said field displays a representation of a file manager and a selection of said field will cause said list to alter and present only files~~.

9. (currently amended) The computer readable medium of claim **7**, wherein the user interface is characterised in, that, [[a]] one item in said list is highlighted by a moveable marking, and ~~navigation in said list is performed by moving~~ gliding the ~~blunt~~ object along the touch sensitive area in a direction towards the top of said list or towards the bottom of said list~~, that the movement of the blunt object will cause~~ causes said marking to move in the same direction without scrolling the list~~, and that the speed of movement of said marking is lower than the speed of movement of the blunt object~~.

10. (currently amended) The computer readable medium of claim **9**, wherein the user interface is characterised in, that, if the number of applications ~~and/~~or files in said list exceeds the number of ~~application~~ applications [[and]] or files that can be presented on said ~~display~~ touch sensitive area as content, and if the ~~blunt~~ object is ~~moved~~ glided along said touch sensitive area to the top or bottom position of said ~~display~~ touch sensitive area, then ~~lifted~~ raised, replaced on said ~~display~~ touch sensitive area, and again ~~moved~~ glided along said touch sensitive area to the top or bottom of said ~~display~~ touch sensitive area, the content of said ~~display~~ touch sensitive area will be replaced one whole page~~, meaning that if the blunt object is positioned at the bottom of said display area, replaced on said display area, and then again moved to the bottom of said display area, the content of said display area will be replaced by the following applications and/or files in said list, and if the blunt object is positioned at the top of said display area, then lifted, replaced on said display area, and then again moved to the top of said display area, the content of said display area will be replaced by the preceding applications and/or files in the list~~.

11. (currently amended) The computer readable medium of claim **10**, wherein the user interface is characterised in, that if the ~~blunt~~ object is ~~removed~~ raised from any first position on said ~~display~~ touch sensitive area and then replaced on any second position on said ~~display~~ touch sensitive area, said navigation can be continued from said second position.

12. (currently amended) The computer readable medium of claim **1**, wherein the user interface is characterised in, that an active application,

function, service or setting is moved on one step by ~~moving~~ gliding the ~~blunt~~ object along the touch sensitive area from ~~the~~ left ~~of said display area~~ to ~~the~~ right ~~of said display area~~, and that the active application, function, service or setting is closed or backed one step by ~~moving~~ gliding the ~~blunt~~ object along the touch sensitive area from ~~the~~ right ~~of said display area~~ to ~~the~~ left ~~of said display area~~.

13. (currently amended) The computer readable medium of claim **1**, wherein the user interface is characterised in, that said ~~menu area is positioned~~ representations of said plurality of functions are located at the bottom of said touch sensitive area~~, that said representation of said first function is positioned at the left side of said menu area, that said representation of said second function is positioned at the middle of said menu area, and that said representation of said third function is positioned at the right side of said menu area~~.

14. (currently amended) The computer readable medium of claim **1**, wherein the ~~user interface is characterised in, that said user interface is adapted to a~~ touch sensitive area ~~with a size that~~ is 2-3 inches in diagonal dimension~~, and that said user interface is adapted to be operated by one hand when the mobile handheld computer unit is held in the one hand, wherein said blunt object is a fleshy part of the thumb of the one hand~~.

15. (currently amended) An enclosure adapted to cover the mobile handheld computer unit according to Claim **1**, characterised in, that said enclosure is provided with an opening for said ~~display~~ touch sensitive area~~, and that a representation of said menu area is printed on top of said enclosure~~.

16. (previously presented) The enclosure according to Claim **15**, characterised in, that said enclosure is removable and exchangeable.

17. (previously presented) A computer readable medium, with a computer program product stored therein, characterised in, that said computer program product comprises computer readable code, which, when read by a computer, will make it possible for said computer to present a user interface according to Claim **1**.

18. (original) A computer readable medium according to Claim **17**, characterised in, that said computer program product is adapted to function as a shell upon an operations system.

19. (withdrawn) An apparatus, comprising:

a computing device configured to provide a plurality of features and/or services to a user, said computing device including a user interface that comprises:

a touchscreen for displaying to the user, individually at differing times, a plurality of display screens corresponding to said plurality of features and/or services and for allowing the user to navigate among said various differing features and/or services and among said plurality of display screens; and

user interface software responsive to interaction of an object with said touchscreen so as to allow the user to navigate among said plurality of features and/or services and among said plurality of display screens, said user interface software configured to:

when said touchscreen is displaying a first display screen of said plurality of display screens, cause said computing

device to display a second display screen of said plurality of display screens in response to a first sweeping movement of the object along said touchscreen in a first direction, said computing device displaying said second display screen after the object has traversed a first predetermined extent of said touchscreen along said first direction; and

when said touchscreen is displaying said second display screen, cause said computing device to display said first display screen in response to a second sweeping movement of the object along said touchscreen in a second direction opposite said first direction, said computing device displaying said first display screen only after the object has traversed a second predetermined extent of said touchscreen along said second direction.

20. (withdrawn) An apparatus according to claim **19**, wherein said touchscreen has a left edge and a right edge when said touchscreen is properly oriented for viewing by the user and said first direction proceeds from a location at or proximate said left edge toward said right edge and said second direction proceeds from a location at or proximate said right edge toward said left edge.

21. (withdrawn) An apparatus according to claim **20**, wherein said touchscreen has a width extending from said left edge to said right edge and each of said first and second extents is substantially equal to said width.

22. (withdrawn) An apparatus according to claim **21**, wherein said touchscreen has a diagonal dimension of two inches to three inches.

23. (withdrawn) An apparatus according to claim **19**, wherein said computing device is sized to be cradled in a hand of an adult human user and so that, when so cradled, all points on said touchscreen are touchable by the thumb of the adult human user, the object being the thumb of the hand.

24. (withdrawn) An apparatus according to claim **19**, wherein each of the first and second sweeping movements does not drag any graphical feature displayed on said touchscreen during that one of the first and second sweeping movements.

25. (withdrawn) An apparatus, comprising:

a computing device configured to provide first and second menu-area functions to a user, said first menu-area function having a first-function display screen and said second menu-area function having a second-function display screen differing from said first-function display screen, said computing device including a user interface that comprises:

a touchscreen simultaneously divided into a menu region and a display region, said menu region containing first and second representations corresponding respectively to said first and second menu-area functions, said display region for displaying to the user at differing times said first-function and second-function display screens; and

user interface software responsive to interaction of an object with said touchscreen so as to allow the user to select at differing times each of said first and second menu-area functions, said user interface software configured to:

display said first-function display screen in response to a first sweeping movement of the object along said touchscreen, the first sweeping movement starting at said first representation in said menu region and proceeding into said display region; and

display said second-function display screen in response to a second sweeping movement of the object along said touchscreen, the second sweeping movement starting at said second representation in said menu region and proceeding into said display region.

26. (withdrawn) An apparatus according to claim **25**, wherein:

said touchscreen has a first edge and a second edge spaced from said first edge;

said first and second representations are each located proximate said first edge and spaced from one another along said first edge; and

the first and second sweeping movements each proceed in a direction toward said second edge.

27. (withdrawn) An apparatus according to claim **25**, wherein said first-function display screen contains a plurality of icons corresponding respectively to a plurality of applications, said user interface software configured to activate any one of said plurality of applications in response to the user tapping the object on said touchscreen at a corresponding one of said plurality of icons.

28. (withdrawn) An apparatus according to claim **27**, wherein said second-function display screen contains a set of application functions, said set varying as a function of which one of said plurality of applications is active when the user makes the second movement.

29. (withdrawn) An apparatus according to claim **27**, wherein a particular application of said plurality of applications has a plurality of application screen displays, said user interface software configured so that when said particular application is active, the user forwardly steps through said plurality of application screen displays by sweeping the object across said touchscreen in a first direction and reversely steps through said plurality of application screen displays by sweeping the object across said touchscreen in a second direction opposite said first direction.

30. (withdrawn) An apparatus according to claim **25**, wherein said first display screen contains a soft-interface telephony keypad.

31. (withdrawn) An apparatus, comprising:

a computing device configured to run a software application configured to display a plurality of predetermined display screens, said computing device including a user interface that comprises:

a touchscreen for displaying to the user, individually at differing times, said plurality of predetermined display screens and for allowing the user to navigate among said plurality of predetermined display screens; and

user interface software responsive to interaction of an object with said touchscreen so as to allow the user to

navigate among said plurality of predetermined display screens, said user interface software configured to:

activate said software application in response to a particular interaction of the object with said touchscreen;

forwardly step in series through ones of said plurality of predetermined display screens in response to corresponding respective individual instances of a first sweeping movement of the object along said touchscreen in a first direction; and

reversely step in series through ones of said plurality of predetermined display screens in response to corresponding respective individual instances of a second sweeping movement of the object along said touchscreen in a second direction different from said first direction.

32. (withdrawn) An apparatus according to claim **31**, wherein said particular interaction of the object with said touchscreen to activate said software application is a third sweeping movement of the object along said touchscreen in a third direction different from each of said first and second directions.

33. (withdrawn) An apparatus according to claim **32**, wherein said first and second directions are opposite one another and said third direction is perpendicular to each of said first and second directions.

34. (withdrawn) An apparatus, comprising:

a computing device configured to run software for providing to a user a plurality of services and/or functions, said computing device including:

a touchscreen for display to the user a graphical user interface and for allowing the user to navigate among said plurality of services and/or functions; and

user interface software responsive to interaction of an object with said touchscreen so as to allow the user to navigate among said plurality of services and/or functions, said user interface software configured to:

present, in response to a sweeping movement of the object across said touchscreen, a display screen containing a plurality of display icons corresponding respectively to ones of said plurality of services and/or functions, the sweeping movement being spatially uncorrelated with information displayed on said touchscreen; and

when said touchscreen is displaying said plurality of display icons, launch one of said plurality of services and/or functions in response to the user tapping the object on said touchscreen at a location where said touchscreen displays the corresponding one of said plurality of display icons.

35. (withdrawn) An apparatus according to claim **34**, wherein said computing device contains a software application and said user interface is configured to present said plurality of display icons only if said software application is active during the sweeping movement of the object.

36. (withdrawn) An apparatus according to claim **35**, wherein when said software application is active during the sweeping of the object, said display icons correspond to services and/or functions specific to said software application.

37. (withdrawn) An apparatus, comprising:

a computing device containing software for providing to a user a plurality of services and/or functions, said computing device including:

a touchscreen for displaying to the user, individually at differing times, ones of various display screens associated with said plurality of services and/or functions and for allowing the user to navigate among said plurality of display screens so as to provide the user with access to said plurality of services and/or functions and for allowing the user to control functioning of ones of said plurality of services and/or functions; and

user interface software responsive to a set of movements of an object with respect to said touchscreen so as to allow the user to navigate among said plurality of display screens and to control functioning of ones of said plurality of services and/or functions, said set of movements including a plurality of sweeping movements having differing directionalities along said touchscreen, wherein said plurality of sweeping movements being spatially uncorrelated with information displayed on said touchscreen, said user interface software being configured to distinguish the plurality of sweeping movements from one another as a function of the differing directionalities so as to provide differing responses as a function of said differing directionalities.

38. (withdrawn) An apparatus according to claim **37**, wherein two sweeping movements of the plurality of sweeping movements have opposing directionality and said user interface software is configured to provide two opposing responses corresponding respectively to said two sweeping movements.

39. (withdrawn) An apparatus according to claim **38**, wherein one of the two opposing responses is moving forward in a series of display screens and the other of the two opposing responses is moving backward in the series of display screens.

40. (withdrawn) An apparatus according to claim **37**, wherein each of the plurality of sweeping movements does not drag any graphical feature displayed on said touchscreen during that one of the plurality of sweeping movements.

41. (withdrawn) An apparatus, comprising:

a computing device configured to provide a plurality of features, settings, applications and/or services to a user, said computing device including a user interface that comprises:

a touchscreen for displaying to the user a list of items corresponding to at least one of a plurality of features, settings, applications and/or services and for allowing the user to select any one of said items using said list; and

user interface software responsive to interaction of an object with said touchscreen so as to allow the user to navigate among said list and to select any one of said items, said user interface software configured to move a highlight marking, having a

displayed location on said touchscreen, in a desired direction within said list in response to the user:

(a) contacting said touchscreen with the object at a first location that is a function of the desired direction, not said displayed location of said highlight marking;

(b) while keeping the object in contact with said touchscreen, moving the object along said touchscreen in the desired direction to a second location; and

(c) immediately following said moving of the object along said touchscreen to said second location, lifting the object from said touchscreen so as to establish a new location of said highlight marking.

42. (withdrawn) An apparatus according to claim **41**, wherein said user interface software is configured to, after the user has marked a desired one of said items by performing steps (a) through (c) so as to highlight said desired one with the highlight marking, select said desired one in response to the user tapping the object on said touchscreen without regard to said display location of the highlight marking.

43. (withdrawn) An apparatus, comprising:

a computing device configured to provide a plurality of features, settings, applications and/or services to a user, said computing device including a user interface that comprises:

a touchscreen for displaying to the user a list of items corresponding to at least one of said plurality of features, settings, applications and/or services and for allowing the user to select any one of said items using said list; and

user interface software responsive to interaction of an object with said touchscreen so as to allow the user to scroll said list and to select any one of said plurality items, said user interface software configured to scroll said list in a desired direction in response to the user:

(a) contacting said touchscreen with the object at a first location that is a function of the desired direction of said scroll and that is not based on any soft scroll control displayed on said touchscreen; and

(b) while keeping the object in contact with said touchscreen, moving the object along said touchscreen in the desired direction to a second location, wherein said moving of the object causes said list to scroll in the desired direction.

44. (withdrawn) An apparatus according to claim **43**, wherein said user interface software is configured to activate a selected one of said items in response to a user tapping the object on said touchscreen following the user lifting the object from the touchscreen after the user performs step (b).

45. (withdrawn) An apparatus according to claim **43**, wherein said items are files.

46. (withdrawn) An apparatus according to claim **43**, wherein said items are email messages.

47. (withdrawn) An apparatus according to claim **43**, wherein each item is contact information for a corresponding contact.

REMARKS

Applicant expresses appreciation to the Examiner for the courtesy of an interview granted to applicant's representative Marc A. Berger (Reg. No. 44,029). The interview was held by telephone on Thursday, September 4, 2008. The substance of the interview is contained in the Interview Summary, Form PTOL-413, prepared and entered by the Examiner. Claims **1** - **15** have been amended in accordance with the conclusions of the interview.

Applicant has carefully studied the outstanding Office Action. The present amendment is intended to place the application in condition for allowance and is believed to overcome all of the objections and rejections made by the Examiner. Favorable reconsideration and allowance of the application are respectfully requested.

Applicant has withdrawn claims **19** – **47**, and amended claims **1** – **15** to properly claim the present invention. No new matter has been added. Claims **1** – **18** are presented for examination.

In paragraphs 1 - 8 of the Office Action, the Examiner has rejected claims **1**, **4** – **7**, **12**, **15** and **17** under 35 U.S.C. §103(a) as being unpatentable over Carlson, F., Visual Quickstart Guide: Palm Organizers ("Carlson") in view of Milic-Frayling et al., US Publication No. 2004/0100510 ("Milic-Frayling"), and further in view of Conrad et al., US Patent No. 5,956,030 ("Conrad").

In paragraph 9 of the Office Action, the Examiner has rejected claims **2** and **3** under 35 U.S.C. §103(a) as being unpatentable over Carlson in view of Milic-Frayling, in view of Conrad, and further in view of Kopitzke et al., US Patent No. 6,988,246 ("Kopitzke").

In paragraph 10 – 13 of the Office Action, the Examiner has rejected claims **8** – **11** under 35 U.S.C. §103(a) as being unpatentable over Carlson in view of Milic-Frayling, in view of Conrad, and further in view of Wynn et al., US Patent No. 6,734,883 ("Wynn").

In paragraph 14 of the Office Action, the Examiner has rejected claim **13** under 35 U.S.C. §103(a) as being unpatentable over Carlson, in view of Milic-Frayling, and further in view of Conrad.

In paragraphs 15 and 16 of the Office Action, the Examiner has rejected claims **14** and **16** under 35 U.S.C. §103(a) as being unpatentable over Carlson, in view of Milic-Frayling, in view of Conrad, and further in view of Strietelmeier, Palm m100, The Gadgeteer ("Strietelmeier").

In paragraphs 17 and 18 of the Office Action, the Examiner has rejected claim **18** under 35 U.S.C. §103(a) as being unpatentable over Carlson, in view of Milic-Frayling, in view of Conrad, and further in view of Chew et al., US Patent No. 6,727,917 ("Chew").

Distinctions between Claimed Invention and Carlson, F., Visual Quickstart Guide: Palm Organizers, US Publication No. 2004/0100510 of Milic-Frayling et al., US Patent No. 5,956,030 to Conrad et al., US Patent No. 6,988,246 to Kopitzke et al., US Patent No. 6,734,883 to Wynn et al., Strietelmeier, Palm m100, The Gadgeteer, and US Patent No. 6,727,917 to Chew et al.

Aspects of the subject invention concern a touch-based user interface with functionalities for running interactive applications using touch-based icons, for inputting text using a touch-based keypad, and for managing files using a touch-based file listing. User inputs include finger taps and thumb movements. One such movement is a

thumb touch-and-glide, where the thumb touches a touch screen at a location where an icon for a function is displayed, and glides along the touch screen away from the location, as illustrated in FIG. 2 of the subject application.

Carlson describes how to use the Palm Organizer touch-based user interface. Through a series of pictures, Carlson shows how to run applications, view documents, access menus, and use an onscreen keyboard.

Milic-Frayling describes an interactive user interface for presenting search results on small display screens of handheld devices. Search results are annotated to highlight search hits, and text is wrapped so as to avoid the need for horizontal scrolling.

Conrad describes a window management system for keeping open windows offscreen in a drawer area (Conrad/ elements D1 – D4 of FIG. 1), and available for popping them back onscreen by clicking on a title bar or drawer handle of the offscreen window (Conrad/ FIGS. 2 – 4). Conrad also describes "spring loaded" enclosures for opening temporary windows for enclosure identifiers, during a drag operation (Conrad/ FIGS. 8A – 8D and 9A – 9E).

Kopitzke describes a touch-sensitive user interface for use in an aircraft with multiple cabin systems. A main menu (Kopitzke/ FIG. 4) provides an overview of cabin status, and information and data regarding the cabin systems. The main menu includes touch input keys for bringing up menus for each of the individual aircraft cabin systems, for monitoring and controlling their operation. Cabin systems include inter alia an audio system (Kopitzke/ FIG. 5), a video system, a lighting system (Kopitzke/ FIG. 6), a climate control system, a doors & hatches

system (Kopitzke/ FIG. 7), a water supply system (Kopitzke/ FIG. 8), an electric power supply system, and a data communication system.

Wynn describes a user interface for spinning through a list of items. The user interface displays a preview list of items and a postview list of items on opposite sides of a currently selected item in the list (Wynn/ FIG. 7).

Strietelmeier describes the mechanical casing, hardware components and software applications of the Palm m100 Organizer, in comparison with the Palm IIIc, the Palm V and the Handspring Visor.

Chew describes a user interface for running and interacting with multiple applications on small handheld device display screens. Chen describes a user interface display having a top portion with a navigation bar (Chew/ element 302 of FIG. 3) for navigating between different applications, a middle portion for graphically displaying outputs of a currently active application, and a bottom portion with an application menu bar (Chew/ element 304 of FIG. 3) for entering inputs to the currently active application.

The touch-based user interface of the subject claimed invention is generally operated by the thumb. The touch-based user interface of Carlson is generally operated by a stylus. Although, the user interface of Carlson may also be operated by the thumb, the natures of the two user interfaces are distinct. The subject claimed invention teaches "rubbing", "touch-and-glide" movements to operate a user interface, whereby the thumb touches a touch-sensitive screen and rubs, or glides, along the screen without lifting the thumb. In distinction, tap movements and one-stroke pen drags are used to operate the touch-based user interface of Carlson. In terms of motor skill, the touch-and-glide movements of the subject claimed invention are akin to pressing

with the thumb on a mechanical slider button, such as the slider button with HI/LO/OFF settings on a hair-dryer handle, and sliding the button up or down while it is pressed.

The touch-and-glide movements of the subject claimed invention are illustrated in FIGS. 2, 7 and 10 by a left-arrow and a thumb touching a touch-sensitive screen.

The touch-and-glide movements of the subject claimed invention are used to activate functions (original specification/ Abstract; page 2, lines 25 – 28; page 5, lines 24 – 27; FIG. 2; original claim **1**), and to scroll a selector forward and backward within a list to select a desired item in the list, and to page up and page down within a list (original specification/ page 3, lines 28 – page 4, line 2; page 7, lines 7 – 10; page 7, line 27 – page 9, line 14; FIGS. 7 and 10; original claims **7**, **9** and **10**).

The touch-and-glide movements of the subject claimed invention activate a function located at the touch point. The one-stroke pen drag movement of Carlson activates a pre-designated program, irrespective of where the pen drag begins; namely, the onscreen keyboard or a custom pre-designated program that may be substituted therefor.

Other conventional finger-based touch screens, such as the large touch screens used for self-serve check-in at airport terminals, use touch-sensitive input keys. In distinction, the touch-and-glide inputs of the subject claimed invention are of particular advantage for small handheld devices, where screen space is minimal.

Response to Examiner's Arguments

In rejecting independent claim **1**, the Examiner has cited the "one-stroke pen drag" (Carlson/ page 30; FIG. 2.22) as teaching that "*any one of said three functions can be activated when said touch sensitive area detects a movement of an object with its starting point within the representation of said function on said menu area and with a direction from said menu area to said display area*". In rejecting dependent claim **9**, the Examiner has cited dragging a vertical scroll bar (Carlson/ page 27). In rejecting dependent claim **12**, the Examiner has cited dragging a horizontal scroll bar (Carlson/ page 246; FIG. 14.2).

Applicant respectfully submits that the one-stroke drag of Carlson is very distinct from the location-based touch-and-glide movement of the subject invention (original specification/ FIG. 2). The following table summarizes some of the relevant distinctions.

TABLE I: Partial list of distinctions between one-stroke drag of Carlson and location-based touch-and-glide movement of the claimed invention

One-stroke drag	Location-based touch-and-glide
Default function is the onscreen keyboard; may be customized to activate a different pre-designated function.	The function displayed at the touch point is activated.
At any given time, may be used for activating only one pre-designated function.	At any given time, may be used for activating whichever function is touched, from among a plurality of functions.
The starting location has no bearing on the function that is activated.	The starting location determines which of the plurality of functions is activated.
Performed by a stylus.	Performed by the thumb.
Requires the user interface to recognize a vertical drag.	Requires the user interface to recognize a glide and identify the function displayed at the starting location of the glide.
Requires one hand to hold the device and another hand to perform the stylus movement.	The same hand may be used to hold the device and perform the thumb movement.
Not used for scrolling through a list.	Used for scrolling through a list.

Applicant further respectfully submits that the scroll slider drag of Carlson is very distinct from the location-based touch-and-glide movement of the subject invention. The following table summarizes some of the relevant distinctions.

TABLE II: Partial list of distinctions between scroll slider drag of Carlson and location-based touch-and-glide movement of the claimed invention	
Scroll slider drag	**Location-based touch-and-glide**
Requires the user interface to recognize a horizontal drag or a vertical drag.	Requires the user interface to recognize a glide in any of a plurality of directions.
Performed by a stylus.	Performed by the thumb.
Requires one hand to hold the device and another hand to perform the stylus movement.	The same hand may be used to hold the device and perform the thumb movement.
Not used for scrolling through a list.	Used for scrolling through a list.

In order to clarify these distinctions, applicant has amended claim **1** to include the limitation of each of the plurality of functions being mapped to a corresponding location in the touch sensitive area, and being activated by an object touching the corresponding location and then gliding along the touch sensitive area away from the location.

Applicant has carefully reviewed all of the cited prior art. None of the cited prior art teaches the location-based touch-and-glide thumb movement of the subject claimed invention. Specifically, Milic-Frayling and Conrad do not use touch screens. Kopitzke uses touch input keys. Wynn mentions touch sensitive displays with stylus pens. Strietelmeier mentions writing with a stylus. Chew uses a stylus to tap on a touch screen.

The rejections of the claims **1** – **18** in paragraphs 1 - 18 of the Office Action will now be dealt with specifically.

As to amended independent claim **1** for a computer readable medium, applicant respectfully submits that the limitation in claim **1** of

"*each function of said plurality of functions being mapped to a corresponding location in the touch sensitive area at which the representation of the function is displayed, and being activated by an object touching the corresponding location and then gliding along the touch sensitive area away from the location*"

is neither shown nor suggested in Carlson, Milic-Frayling, Conrad, Kopitzke, Wynn, Strietelmeier or Chew.

Because claims **2** – **18** depend from claim **1** and include additional features, applicant respectfully submits that claims **2** – **18** are not anticipated or rendered obvious by Carlson, Milic-Frayling, Conrad, Kopitzke, Wynn, Strietelmeier, Chew, or a combination of Carlson, Milic-Frayling, Conrad, Kopitzke, Wynn, Strietelmeier and Chew.

Accordingly claims **1** – **18** are deemed to be allowable.

Support for Amended Claims in Original Specification

Independent claim **1** has been amended to include the limitation of each of a plurality of functions being mapped to a corresponding location in a touch sensitive area, and being activated by an object touching the corresponding location and then gliding along the touch sensitive area away from the location. This limitation is supported in the original specification at least at page 2, lines 25 – 28, at page 5, lines 19 – 27, at FIGS. 1, 2, 7 and 10, and in the Abstract.

For the foregoing reasons, applicant respectfully submits that the applicable objections and rejections have been overcome and that the claims are in condition for allowance.

Respectfully submitted,

Dated: September 8, 2008

/Marc A. Berger/
Marc A. Berger
Reg. No. 44,029

P.O. Box 691
Soquel, CA 95073
(831) 426-8200

Electronic Acknowledgement Receipt

EFS ID:	3900808
Application Number:	10315250
International Application Number:	
Confirmation Number:	1226
Title of Invention:	User interface
First Named Inventor/Applicant Name:	Magnus Goertz
Customer Number:	60956
Filer:	Marc Aron Berger
Filer Authorized By:	
Attorney Docket Number:	3682-32
Receipt Date:	08-SEP-2008
Filing Date:	10-DEC-2002
Time Stamp:	11:05:11
Application Type:	Utility under 35 USC 111(a)

Payment information:

Submitted with Payment	no

File Listing:

Document Number	Document Description	File Name	File Size(Bytes)/ Message Digest	Multi Part /.zip	Pages (if appl.)
1	Amendment After Final	NEONODEP004AmendmentAfterFinal.pdf	141398 6268086be27b48a9dbd06ec1463153810dd11690	no	30

Warnings:	
Information:	

Total Files Size (in bytes):	141398

This Acknowledgement Receipt evidences receipt on the noted date by the USPTO of the indicated documents, characterized by the applicant, and including page counts, where applicable. It serves as evidence of receipt similar to a Post Card, as described in MPEP 503.

New Applications Under 35 U.S.C. 111
If a new application is being filed and the application includes the necessary components for a filing date (see 37 CFR 1.53(b)-(d) and MPEP 506), a Filing Receipt (37 CFR 1.54) will be issued in due course and the date shown on this Acknowledgement Receipt will establish the filing date of the application.

National Stage of an International Application under 35 U.S.C. 371
If a timely submission to enter the national stage of an international application is compliant with the conditions of 35 U.S.C. 371 and other applicable requirements a Form PCT/DO/EO/903 indicating acceptance of the application as a national stage submission under 35 U.S.C. 371 will be issued in addition to the Filing Receipt, in due course.

New International Application Filed with the USPTO as a Receiving Office
If a new international application is being filed and the international application includes the necessary components for an international filing date (see PCT Article 11 and MPEP 1810), a Notification of the International Application Number and of the International Filing Date (Form PCT/RO/105) will be issued in due course, subject to prescriptions concerning national security, and the date shown on this Acknowledgement Receipt will establish the international filing date of the application.

RECEIVED
CENTRAL FAX CENTER

SEP 03 2008

PTO/SB/81 (07-08)
Approved for use through 12/31/2008. OMB 0651-0035
U.S. Patent and Trademark Office; U.S. DEPARTMENT OF COMMERCE
Under the Paperwork Reduction Act of 1995, no persons are required to respond to a collection of information unless it displays a valid OMB control number.

POWER OF ATTORNEY OR REVOCATION OF POWER OF ATTORNEY WITH A NEW POWER OF ATTORNEY AND CHANGE OF CORRESPONDENCE ADDRESS

Application Number	10/315,250
Filing Date	December 10, 2002
First Named Inventor	Magnus Goertz
Title	USER INTERFACE
Art Unit	2174
Examiner Name	Pham, Ryan A
Attorney Docket Number	NEONODE.P004

I hereby revoke all previous powers of attorney given in the above-identified application.

☐ A Power of Attorney is submitted herewith.

OR

☒ I hereby appoint Practitioner(s) associated with the following Customer Number as my/our attorney(s) or agent(s) to prosecute the application identified above, and to transact all business in the United States Patent and Trademark Office connected therewith: 75660

OR

☐ I hereby appoint Practitioner(s) named below as my/our attorney(s) or agent(s) to prosecute the application identified above, and to transact all business in the United States Patent and Trademark Office connected therewith:

Practitioner(s) Name	Registration Number

Please recognize or change the correspondence address for the above-identified application to:

☒ The address associated with the above-mentioned Customer Number.

OR

☐ The address associated with Customer Number:

OR

☐ Firm or Individual Name			
Address			
City		State	Zip
Country			
Telephone		Email	

I am the:

☐ Applicant/Inventor.

OR

☒ Assignee of record of the entire interest. See 37 CFR 3.71.
Statement under 37 CFR 3.73(b) (Form PTO/SB/96) submitted herewith or filed on _____

SIGNATURE of Applicant or Assignee of Record

Signature		Date	28 August 2008
Name	Per Bystedt	Telephone	+46 8 678 1850
Title and Company	CEO, Neonode		

NOTE: Signatures of all the inventors or assignees of record of the entire interest or their representative(s) are required. Submit multiple forms if more than one signature is required, see below*.

☐ *Total of _____ forms are submitted.

This collection of information is required by 37 CFR 1.31, 1.32 and 1.33. The information is required to obtain or retain a benefit by the public which is to file (and by the USPTO to process) an application. Confidentiality is governed by 35 U.S.C. 122 and 37 CFR 1.11 and 1.14. This collection is estimated to take 3 minutes to complete, including gathering, preparing, and submitting the completed application form to the USPTO. Time will vary depending upon the individual case. Any comments on the amount of time you require to complete this form and/or suggestions for reducing this burden, should be sent to the Chief Information Officer, U.S. Patent and Trademark Office, U.S. Department of Commerce, P.O. Box 1450, Alexandria, VA 22313-1450. DO NOT SEND FEES OR COMPLETED FORMS TO THIS ADDRESS. SEND TO: **Commissioner for Patents, P.O. Box 1450, Alexandria, VA 22313-1450.**

If you need assistance in completing the form, call 1-800-PTO-9199 and select option 2.

RECEIVED
CENTRAL FAX CENTER

SEP 03 2008

PTO/SB/96 (08-08)
Approved for use through 08/31/2008. OMB 0651-0031
U.S. Patent and Trademark Office; U.S. DEPARTMENT OF COMMERCE
Under the Paperwork Reduction Act of 1995, no persons are required to respond to a collection of information unless it displays a valid OMB control number.

STATEMENT UNDER 37 CFR 3.73(b)

Applicant/Patent Owner: Neonode AB

Application No./Patent No.: 10/315,250 Filed/Issue Date: December 10, 2002

Entitled: USER INTERFACE

Neonode AB (Name of Assignee), a corporation (Type of Assignee, e.g., corporation, partnership, university, government agency, etc.)

states that it is:

1. [✓] the assignee of the entire right, title, and interest; or
2. [ ] an assignee of less than the entire right, title and interest (The extent (by percentage) of its ownership interest is _____ %)

in the patent application/patent identified above by virtue of either:

A. [ ] An assignment from the inventor(s) of the patent application/patent identified above. The assignment was recorded in the United States Patent and Trademark Office at Reel _____, Frame _____, or for which a copy thereof is attached.

OR

B. [✓] A chain of title from the inventor(s), of the patent application/patent identified above, to the current assignee as follows:

1. From: Magnus Goertz To: Neonode Sweden AB
   The document was recorded in the United States Patent and Trademark Office at Reel 018163, Frame 0611, or for which a copy thereof is attached.
2. From: Neonode Sweden AB To: Neonode AB
   The document was recorded in the United States Patent and Trademark Office at Reel 018137, Frame 0448, or for which a copy thereof is attached.
3. From: _____ To: _____
   The document was recorded in the United States Patent and Trademark Office at Reel _____, Frame _____, or for which a copy thereof is attached.

[ ] Additional documents in the chain of title are listed on a supplemental sheet.

[✓] As required by 37 CFR 3.73(b)(1)(i), the documentary evidence of the chain of title from the original owner to the assignee was, or concurrently is being, submitted for recordation pursuant to 37 CFR 3.11.

[NOTE: A separate copy (*i.e.*, a true copy of the original assignment document(s)) must be submitted to Assignment Division in accordance with 37 CFR Part 3, to record the assignment in the records of the USPTO. See MPEP 302.08]

The undersigned (whose title is supplied below) is authorized to act on behalf of the assignee.

[signature]	28 August 2008
Signature	Date
Per Bystedt	+46 8 678 1850
Printed or Typed Name	Telephone Number
CEO, Neonode	
Title	

This collection of information is required by 37 CFR 3.73(b). The information is required to obtain or retain a benefit by the public which is to file (and by the USPTO to process) an application. Confidentiality is governed by 35 U.S.C. 122 and 37 CFR 1.11 and 1.14. This collection is estimated to take 12 minutes to complete, including gathering, preparing, and submitting the completed application form to the USPTO. Time will vary depending upon the individual case. Any comments on the amount of time you require to complete this form and/or suggestions for reducing this burden, should be sent to the Chief Information Officer, U.S. Patent and Trademark Office, U.S. Department of Commerce, P.O. Box 1450, Alexandria, VA 22313-1450. DO NOT SEND FEES OR COMPLETED FORMS TO THIS ADDRESS. SEND TO: Commissioner for Patents, P.O. Box 1450, Alexandria, VA 22313-1450.

If you need assistance in completing the form, call 1-800-PTO-9199 and select option 2.

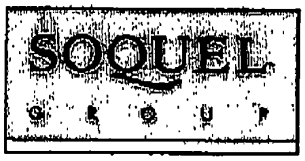

RECEIVED
CENTRAL FAX CENTER
SEP 03 2008

29 Aharoni Street, Suite #13 • Rechovot 76282 • Israel • Phone: 972-8-9315207 • Fax: 972-8-9315208

FACSIMILE COVER LETTER

Note: This facsimile contains PRIVILEGED and CONFIDENTIAL information intended only for use of the specific individual or entity named below. If you or your employer is not the intended recipient of this facsimile or an employee or agent responsible for delivering it to the intended recipient, you are hereby notified that any unauthorized dissemination or copying of this facsimile or the information contained in it is strictly prohibited. If you have received this facsimile in error, please immediately notify the person named below at once by telephone and return the original facsimile to us at the address below. Thank you.

SENDER'S NAME: Marc Berger
Soquel Group LLC
29 Aharoni Street, Suite #13
Rehovot 76282
ISRAEL

TRANSMISSION DATE: September 3, 2008

PLEASE DELIVER TO:

Recipient:	Examiner Ryan F. Pitaro, AU 2174
Firm:	**United States Patent & Trademark Office**
Fax No.:	571-273-8300
City/State/Country:	Alexandria, VA USA

COMMENTS:
Interview agenda for US Serial No. 10/315,250

WE ARE TRANSMITTING 39 PAGE(S) (including this cover letter) from:

FAX NO. 011-972-8-9315208

If you do not receive all of the pages or if any pages received are illegible, please contact our office.

PAGE 1/39 * RCVD AT 9/3/2008 3:08:58 AM [Eastern Daylight Time] * SVR:USPTO-EFXRF-6/10 * DNIS:2738300 * CSID:972 8 9315208 * DURATION (mm-ss):05-46

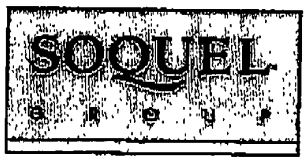

RECEIVED
CENTRAL FAX CENTER
SEP 03 2008

29 Aharoni Street, Suite #13 • Rechovot 76282 • Israel • Phone: 972-8-9315207 • Fax: 972-8-9315208

September 3, 2008

BY FACSIMILE

Examiner Ryan F. Pitaro
United States Patent & Trademark Office
Alexandria, VA
USA

Dear Examiner Pitaro,

RE: Interview agenda for US Serial No. 10/315,250
USER INTERFACE FOR MOBILE HANDHELD COMPUTER UNIT
Filed on December 10, 2002
In the name of Neonode AB

This letter regards the agenda for our telephone interview, which is scheduled for Thursday, September 4, 2008 at 10:30 AM.

The above referenced application was recently transferred to me, and I am attaching the Power of Attorney I received and mailed to the USPTO.

For the interview, I would like to discuss the attached draft proposed amendment. Specifically, I would like to discuss the touch-and-glide thumb movement, variously referred to as "swiping", "rubbing", "gliding" and "sliding". This movement is described in claim 1 as "an object touching a location in the touch sensitive area at which the representation of the function is displayed and then gliding along the touch sensitive area away from the location."

I understand that you have seen a demonstration of Neonode's touch-sensitive user interface. I believe that the touch-and-glide movement of the claimed invention is different than the input movements disclosed in the cited prior art of Carlson, Milic-Frayling, Conrad, Kopitzke, Wynn, Strietelmeier and Chew.

PAGE 2/39 * RCVD AT 9/3/2008 3:08:58 AM [Eastern Daylight Time] * SVR:USPTO-EFXRF-6/10 * DNIS:2738300 * CSID:972 8 9315208 * DURATION (mm-ss):05-46

The tables provided in the draft response summarize some of the distinguishing features of the touch-and-glide movement. In this regard, I would like to point out the following distinctions.

a. The touch-and-glide movement activates the function displayed at the touch point.
b. At any given time, the touch-and-glide movement may be used for activating any one of a plurality of different functions.
c. The touch-and-glide movement may also be used for scrolling up or down through a list.
d. Processing the touch-and-glide movement requires that the user interface recognize a glide and identify the function displayed at the starting location of the glide.
e. Processing the touch-and-glide movement requires that the user interface recognize a glide in any of a plurality of directions.
f. The same hand may be used to hold the device and perform the touch-and-glide thumb movement.

This is what I would like to discuss during our telephone interview.

I am also attaching a clean version of the proposed amended claims, without markings, for ease of reference.

I appreciate your courtesy of granting the interview, and I look forward to speaking with you.

Sincerely yours,

Marc A. Berger
U.S. Reg. No. 44,029

Encl. Power of Attorney (2 pages)
Draft proposed amendment – not to be entered (29 pages)
Clean version of amended claims without markings (5 pages)

www.sequalgroup.com
PAGE 3/39 * RCVD AT 9/3/2008 3:08:58 AM [Eastern Daylight Time] * SVR:USPTO-EFXRF-6/10 * DNIS:2738300 * CSID:972 8 9315208 * DURATION (mm-ss):05-46

RECEIVED
CENTRAL FAX CENTER
SEP 03 2008

Attorney's Docket No.: NEONODE.P004 *PATENT*

IN THE UNITED STATES PATENT AND TRADEMARK OFFICE

In Re Patent Application of: Magnus Goertz	Examiner: Ryan F. Pitaro
Application No: 10/315,250	Art Unit: 2174
Filed: December 10, 2002	
For: USER INTERFACE FOR MOBILE HANDHELD COMPUTER UNIT	

Mail Stop AMENDMENT
Commissioner for Patents
P. O. Box 1450
Alexandria, VA 22313-1450

DRAFT PROPOSED AMENDMENT --

NOT TO BE ENTERED

Sir:

In response to the Office Action dated July 11, 2008, applicant respectfully requests that the above-identified application be amended as follows:

PAGE 6/39 * RCVD AT 9/3/2008 3:08:58 AM [Eastern Daylight Time] * SVR:USPTO-EFXRF-6/10 * DNIS:2738300 * CSID:972 8 9315208 * DURATION (mm-ss):05-46

IN THE DESCRIPTION:

Please amend the specification as follows.

Page 1, ninth full paragraph:

Since the users have gotten used to small handheld units, it is hard to move towards larger units. This has led to foldable keyboards, different kinds [[if]] of joy sticks and different kinds of touch sensitive displays and pads intended to help in providing a user interface that is suitable for small handheld ~~compute~~ computer units.

Page 2, first full paragraph:

It is a problem to provide a user-friendly interface that is adapted to handle a large amount of information and different kinds of traditional computer-related applications on a small handheld computer unit.

Page 3, sixth full paragraph:

In order to provide a task and file management in a user interface for a handheld mobile computer, the present invention teaches that, if the third function is activated, the display area is adapted to display a list with a library of available applications and files on the computer [[unit]] unit. A selection of an application will start the application, and a selection of a file will open the file in an application intended for the file.

Page 7, fifth full paragraph:

It should [[b]] be understood that all lists in the computer unit, such as a list of contact information in an address book, a

PAGE 7/39 * RCVD AT 9/3/2008 3:08:58 AM [Eastern Daylight Time] * SVR:USPTO-EFXRF-6/10 * DNIS:2738300 * CSID:972 8 9315208 * DURATION (mm-ss):05-46

list of e-mail messages in a mailbox, or a telephone log, can be managed in the above described manner.

Page 7, sixth full paragraph:

The list 231 can be adapted to present only files or only applications. In this case, the top area of the list 231 can present a field 233 through which the content [[if]] <u>of</u> the list 231 can be altered. If the list only presents files, then the field 233 can display a representation of a task manager and a selection of the field 233 will cause the list 231 to alter to present only applications, and if the list 231 only presents applications, then the field 233 displays a representation of a file manager and a selection of the field 233 will cause the list 231 to alter and present only files.

Page 7, eighth full paragraph:

Figure 9 shows that if the number of applications and/or files in the list 231 exceeds the number of applications and/or files that can be presented on the display area 3, and if the object 4 is moved to the top or bottom position of the display area, then lifted, replaced on the display area, and then again moved to the top or bottom of the display area, then the content of the display area will be replaced one whole page, meaning that if the object 4 is positioned N at the bottom 3b of the display area 3, then lifted, replaced on the display area 3, and then again moved M to the bottom 3b of the display area 3, then the content 31 of the display area 3 will be replaced P by the following applications and/or files 32 in the list 231. In the same way, but not shown in the figure, if the object is ~~position~~ <u>positioned</u> at the top of the display area, then lifted, replaced on the display area 3, and then again moved to the top of the

PAGE 8/39 * RCVD AT 9/3/2008 3:08:58 AM [Eastern Daylight Time] * SVR:USPTO-EFXRF-6/10 * DNIS:2738300 * CSID:972 8 9315208 * DURATION (mm-ss):05-46

display area, the content of the display area will be replaced by the preceding applications and/or files in the list.

Publication No. US 2004/0109013 A1, paragraph [0069]:

As shown in figure 13, the present invention relates to a user interface for a hand held mobile unit that preferably can be manageable with one hand. Hence the present invention teaches that the user interface is adapted to a touch sensitive area [[I]] 1 with a size that is in the order of 2-3 inches, meaning the diagonal distance W between two corners of the touch sensitive area 1.

PAGE 9/39 * RCVD AT 9/3/2008 3:08:58 AM [Eastern Daylight Time] * SVR:USPTO-EFXRF-6/10 * DNIS:2738300 * CSID:972 8 9315208 * DURATION (mm-ss):05-46

RECEIVED
CENTRAL FAX CENTER
SEP 03 2008

IN THE CLAIMS:

Please substitute the following claims for the pending claims with the same number:

1. (currently amended) A computer readable medium storing a computer program with computer program code, which, when read by a mobile handheld computer unit, allows the computer to present a user interface for the mobile handheld computer unit, the user interface comprising:

a touch sensitive area ~~that is simultaneously divided into a menu area and a display area, the mobile handheld computer unit being adapted to run several applications simultaneously, and to present an active application on top of any other application on said display area, characterised in, that:~~

~~said menu area simultaneously presents~~ in which representations of a ~~first function that is a general application dependent function, a second function that is a keyboard function, and a third function that is a task and file manager~~ plurality of functions are displayed, and

each function of said ~~first, second, and third functions simultaneously represented in said menu area~~ plurality of functions being activated by ~~the single step of a blunt~~ an object touching a location in the touch sensitive area at which the representation of the function is displayed and then gliding along the touch sensitive area away from the location ~~moving in a direction from a starting point that is the representation of the corresponding one of said first, second, and third functions in said menu area to said display area being detected by said touch sensitive area, thereby allowing low precision navigation of the user~~

PAGE 10/39 * RCVD AT 9/3/2008 3:08:58 AM [Eastern Daylight Time] * SVR:USPTO-EFXRF-6/10 * DNIS:2738300 * CSID:972 8 9315208 * DURATION (mm-ss):05-46

~~interface using the blunt object, so that the user interface can be operated by one hand, where the blunt object is a finger~~.

2. (currently amended) The computer readable medium of claim **1**, wherein one function from the plurality of functions, when ~~the mobile handheld computer unit runs an operating system, the user interface is characterised in, that, if said first function is~~ activated, causes the user interface ~~is adapted~~ to display icons representing different services or settings ~~depending on the current~~ for a currently active application~~, that one of said icons always represents a "help" service, regardless of application, and that, if no application is current active on the mobile handheld computer unit, said icons are adapted to represent services or settings of the operating system of the mobile handheld computer unit~~.

3. (currently amended) The computer readable medium of claim **2**, wherein the user interface is characterised in, that a selection of a preferred service or setting is done by tapping on a ~~corresponding~~ display icon corresponding to the preferred service or setting.

4. (currently amended) The computer readable medium of claim **1**, wherein ~~the user interface is characterised in,~~

~~that, if said second~~ one function from the plurality of functions, when [[is]] activated, ~~said display area is adapted~~ causes the user interface to display a keyboard and a text field~~,~~

~~that, if a text passage in said active application is highlighted, said text passage is displayed in said text field for editing through said keyboard and that said highlighted test passage is replaced by said edited text passage when said second function is deactivated, and~~

PAGE 11/39 * RCVD AT 9/3/2008 3:08:58 AM [Eastern Daylight Time] * SVR:USPTO-EFXRF-6/10 * DNIS:2738300 * CSID:972 8 9315208 * DURATION (mm-ss):05-46

~~- that, if no text passage in said active application is highlighted, said text field is available for inputting and editing of text through said keyboard~~.

5. (currently amended) The computer readable medium of claim **4**, wherein ~~the user interface is characterised in, that if no text passage in said active application is highlighted,~~ said text field is used for inputting and editing of text through said keyboard~~, then~~

~~- said first function can be activated, or~~

~~- said second function can be closed, in which a choice of saving or deleting said inputted text is given, where the choice of saving said inputted text results in an activation of said first function,~~

~~in which said first function will present services or settings available for said inputted text~~.

6. (currently amended) The computer readable medium of claim **1**, wherein ~~the user interface is characterised in, that, if said third~~ one function from the plurality of functions, when [[is]] activated, ~~said display area is adapted~~ causes the user interface to display a list with a library of available applications and files on the mobile handheld computer unit~~,~~ ~~that a selection of an application will start said application, and that a selection of a file will open said file in an application intended for said file~~.

7. (currently amended) The computer readable medium of claim **6**, wherein the user interface is characterised in, that a selection of an application or file is done by ~~moving~~ gliding the ~~blunt~~ object along said touch sensitive area so that a representation of a desired one of said application or file is highlighted, ~~removing~~ raising said object from said

PAGE 12/39 * RCVD AT 9/3/2008 3:08:58 AM [Eastern Daylight Time] * SVR:USPTO-EFXRF-6/10 * DNIS:2738300 * CSID:972 8 9315208 * DURATION (mm-ss):05-46

touch sensitive area, and then tapping on said touch sensitive area~~, and that said desired one of said application or file is highlighted by placing some kind of marking on said representation of said application or file~~.

8. (currently amended) The computer readable medium of claim **7**, wherein the user interface is characterised in, that at any given time said list ~~is adapted to present~~ presents only ~~said~~ files or only ~~said~~ applications, and that ~~a top~~ an area of said list presents a field through which ~~the content of~~ said list can be ~~altered~~ changed from presenting files to presenting applications, or from presenting applications to presenting files~~, that, if said list only presents files, said field displays a representation of a task manager and a selection of said field will cause said list to alter to present only applications, and that, if said list only presents applications, said field displays a representation of a file manager and a selection of said field will cause said list to alter and present only files~~.

9. (currently amended) The computer readable medium of claim **7**, wherein the user interface is characterised in, that, [[a]] navigation in said list is performed by ~~moving~~ gliding the ~~blunt~~ object along the touch sensitive area in a direction towards the top of said list or towards the bottom of said list~~, that the movement of the blunt object will cause said marking to move in the same direction, and that the speed of movement of said marking is lower than the speed of movement of the blunt object~~.

10. (currently amended) The computer readable medium of claim **9**, wherein the user interface is characterised in, that, if the number of applications ~~and/~~or files in said list exceeds the number of ~~application~~

PAGE 13/39 * RCVD AT 9/3/2008 3:08:58 AM [Eastern Daylight Time] * SVR:USPTO-EFXRF-6/10 * DNIS:2738300 * CSID:972 8 9315208 * DURATION (mm-ss):05-46

applications [[and]] or files that can be presented on said ~~display~~ touch sensitive area as content, and if the ~~blunt~~ object is ~~moved~~ glided along said touch sensitive area to the top or bottom position of said ~~display~~ touch sensitive area, then ~~lifted~~ raised, replaced on said ~~display~~ touch sensitive area, and again ~~moved~~ glided along said touch sensitive area to the top or bottom of said ~~display~~ touch sensitive area, the content of said ~~display~~ touch sensitive area will be replaced one whole page~~, meaning that if the blunt object is positioned at the bottom of said display area, replaced on said display area, and then again moved to the bottom of said display area, the content of said display area will be replaced by the following applications and/or files in said list, and if the blunt object is positioned at the top of said display area, then lifted, replaced on said display area, and then again moved to the top of said display area, the content of said display area will be replaced by the preceding applications and/or files in the list~~.

11. (currently amended) The computer readable medium of claim **10**, wherein the user interface is characterised in, that if the ~~blunt~~ object is ~~removed~~ raised from any first position on said ~~display~~ touch sensitive area and then replaced on any second position on said ~~display~~ touch sensitive area, said navigation can be continued from said second position.

12. (currently amended) The computer readable medium of claim **1**, wherein the user interface is characterised in, that an active application, function, service or setting is moved on one step by ~~moving~~ gliding the ~~blunt~~ object along the touch sensitive area from ~~the~~ left ~~of said display area~~ to ~~the~~ right ~~of said display area~~, and that the active application,

PAGE 14/39 * RCVD AT 9/3/2008 3:08:58 AM [Eastern Daylight Time] * SVR:USPTO-EFXRF-6/10 * DNIS:2738300 * CSID:972 8 9315208 * DURATION (mm-ss):05-46

function, service or setting is closed or backed one step by ~~moving~~ gliding the ~~blunt~~ object along the touch sensitive area from ~~the~~ right ~~of said display area~~ to ~~the~~ left ~~of said display area~~.

13. (currently amended) The computer readable medium of claim **1**, wherein the user interface is characterised in, that said ~~menu area is positioned~~ representations of said plurality of functions are located at the bottom of said touch sensitive area~~, that said representation of said first function is positioned at the left side of said menu area, that said representation of said second function is positioned at the middle of said menu area, and that said representation of said third function is positioned at the right side of said menu area~~.

14. (currently amended) The computer readable medium of claim **1**, wherein the ~~user interface is characterised in, that said user interface is adapted to a~~ touch sensitive area ~~with a size that~~ is 2-3 inches in diagonal dimension~~, and that said user interface is adapted to be operated by one hand when the mobile handheld computer unit is held in the one hand, wherein said blunt object is a fleshy part of the thumb of the one hand~~.

15. (currently amended) An enclosure adapted to cover the mobile handheld computer unit according to Claim **1**, characterised in, that said enclosure is provided with an opening for said ~~display~~ touch sensitive area~~, and that a representation of said menu area is printed on top of said enclosure~~.

16. (previously presented) The enclosure according to Claim **15**, characterised in, that said enclosure is removable and exchangeable.

PAGE 15/39 * RCVD AT 9/3/2008 3:08:58 AM [Eastern Daylight Time] * SVR:USPTO-EFXRF-6/10 * DNIS:2738300 * CSID:972 8 9315208 * DURATION (mm-ss):05-46

17. (previously presented) A computer readable medium, with a computer program product stored therein, characterised in, that said computer program product comprises computer readable code, which, when read by a computer, will make it possible for said computer to present a user interface according to Claim **1**.

18. (original) A computer readable medium according to Claim **17**, characterised in, that said computer program product is adapted to function as a shell upon an operations system.

19. (withdrawn) An apparatus, comprising:

a computing device configured to provide a plurality of features and/or services to a user, said computing device including a user interface that comprises:

a touchscreen for displaying to the user, individually at differing times, a plurality of display screens corresponding to said plurality of features and/or services and for allowing the user to navigate among said various differing features and/or services and among said plurality of display screens; and

user interface software responsive to interaction of an object with said touchscreen so as to allow the user to navigate among said plurality of features and/or services and among said plurality of display screens, said user interface software configured to:

when said touchscreen is displaying a first display screen of said plurality of display screens, cause said computing device to display a second display screen of said plurality of display screens in response to a first sweeping movement of the object along said touchscreen in a first direction, said computing device displaying said

PAGE 16/39 * RCVD AT 9/3/2008 3:08:58 AM [Eastern Daylight Time] * SVR:USPTO-EFXRF-6/10 * DNIS:2738300 * CSID:972 8 9315208 * DURATION (mm-ss):05-46

second display screen after the object has traversed a first predetermined extent of said touchscreen along said first direction; and

when said touchscreen is displaying said second display screen, cause said computing device to display said first display screen in response to a second sweeping movement of the object along said touchscreen in a second direction opposite said first direction, said computing device displaying said first display screen only after the object has traversed a second predetermined extent of said touchscreen along said second direction.

20. (withdrawn) An apparatus according to claim **19**, wherein said touchscreen has a left edge and a right edge when said touchscreen is properly oriented for viewing by the user and said first direction proceeds from a location at or proximate said left edge toward said right edge and said second direction proceeds from a location at or proximate said right edge toward said left edge.

21. (withdrawn) An apparatus according to claim **20**, wherein said touchscreen has a width extending from said left edge to said right edge and each of said first and second extents is substantially equal to said width.

22. (withdrawn) An apparatus according to claim **21**, wherein said touchscreen has a diagonal dimension of two inches to three inches.

23. (withdrawn) An apparatus according to claim **19**, wherein said computing device is sized to be cradled in a hand of an adult human user and so that, when so cradled, all points on said touchscreen are touchable

PAGE 17/39 * RCVD AT 9/3/2008 3:08:58 AM [Eastern Daylight Time] * SVR:USPTO-EFXRF-6/10 * DNIS:2738300 * CSID:972 8 9315208 * DURATION (mm-ss):05-46

by the thumb of the adult human user, the object being the thumb of the hand.

24. (withdrawn) An apparatus according to claim **19**, wherein each of the first and second sweeping movements does not drag any graphical feature displayed on said touchscreen during that one of the first and second sweeping movements.

25. (withdrawn) An apparatus, comprising:

a computing device configured to provide first and second menu-area functions to a user, said first menu-area function having a first-function display screen and said second menu-area function having a second-function display screen differing from said first-function display screen, said computing device including a user interface that comprises:

a touchscreen simultaneously divided into a menu region and a display region, said menu region containing first and second representations corresponding respectively to said first and second menu-area functions, said display region for displaying to the user at differing times said first-function and second-function display screens; and

user interface software responsive to interaction of an object with said touchscreen so as to allow the user to select at differing times each of said first and second menu-area functions, said user interface software configured to:

display said first-function display screen in response to a first sweeping movement of the object along said touchscreen, the first sweeping movement starting at said first

PAGE 18/39 * RCVD AT 9/3/2008 3:08:58 AM [Eastern Daylight Time] * SVR:USPTO-EFXRF-6/10 * DNIS:2738300 * CSID:972 8 9315208 * DURATION (mm-ss):05-46

representation in said menu region and proceeding into said display region; and

display said second-function display screen in response to a second sweeping movement of the object along said touchscreen, the second sweeping movement starting at said second representation in said menu region and proceeding into said display region.

26. (withdrawn) An apparatus according to claim **25**, wherein:

said touchscreen has a first edge and a second edge spaced from said first edge;

said first and second representations are each located proximate said first edge and spaced from one another along said first edge; and

the first and second sweeping movements each proceed in a direction toward said second edge.

27. (withdrawn) An apparatus according to claim **25**, wherein said first-function display screen contains a plurality of icons corresponding respectively to a plurality of applications, said user interface software configured to activate any one of said plurality of applications in response to the user tapping the object on said touchscreen at a corresponding one of said plurality of icons.

28. (withdrawn) An apparatus according to claim **27**, wherein said second-function display screen contains a set of application functions, said set varying as a function of which one of said plurality of applications is active when the user makes the second movement.

PAGE 19/39 * RCVD AT 9/3/2008 3:08:58 AM [Eastern Daylight Time] * SVR:USPTO-EFXRF-6/10 * DNIS:2738300 * CSID:972 8 9315208 * DURATION (mm-ss):05-46

29. (withdrawn) An apparatus according to claim **27**, wherein a particular application of said plurality of applications has a plurality of application screen displays, said user interface software configured so that when said particular application is active, the user forwardly steps through said plurality of application screen displays by sweeping the object across said touchscreen in a first direction and reversely steps through said plurality of application screen displays by sweeping the object across said touchscreen in a second direction opposite said first direction.

30. (withdrawn) An apparatus according to claim **25**, wherein said first display screen contains a soft-interface telephony keypad.

31. (withdrawn) An apparatus, comprising:

a computing device configured to run a software application configured to display a plurality of predetermined display screens, said computing device including a user interface that comprises:

a touchscreen for displaying to the user, individually at differing times, said plurality of predetermined display screens and for allowing the user to navigate among said plurality of predetermined display screens; and

user interface software responsive to interaction of an object with said touchscreen so as to allow the user to navigate among said plurality of predetermined display screens, said user interface software configured to:

activate said software application in response to a particular interaction of the object with said touchscreen;

PAGE 20/39 * RCVD AT 9/3/2008 3:08:58 AM [Eastern Daylight Time] * SVR:USPTO-EFXRF-6/10 * DNIS:2738300 * CSID:972 8 9315208 * DURATION (mm-ss):05-46

forwardly step in series through ones of said plurality of predetermined display screens in response to corresponding respective individual instances of a first sweeping movement of the object along said touchscreen in a first direction; and

reversely step in series through ones of said plurality of predetermined display screens in response to corresponding respective individual instances of a second sweeping movement of the object along said touchscreen in a second direction different from said first direction.

32. (withdrawn) An apparatus according to claim **31**, wherein said particular interaction of the object with said touchscreen to activate said software application is a third sweeping movement of the object along said touchscreen in a third direction different from each of said first and second directions.

33. (withdrawn) An apparatus according to claim **32**, wherein said first and second directions are opposite one another and said third direction is perpendicular to each of said first and second directions.

34. (withdrawn) An apparatus, comprising:

a computing device configured to run software for providing to a user a plurality of services and/or functions, said computing device including:

a touchscreen for display to the user a graphical user interface and for allowing the user to navigate among said plurality of services and/or functions; and

PAGE 21/39 * RCVD AT 9/3/2008 3:08:58 AM [Eastern Daylight Time] * SVR:USPTO-EFXRF-6/10 * DNIS:2738300 * CSID:972 8 9315208 * DURATION (mm-ss):05-46

user interface software responsive to interaction of an object with said touchscreen so as to allow the user to navigate among said plurality of services and/or functions, said user interface software configured to:

present, in response to a sweeping movement of the object across said touchscreen, a display screen containing a plurality of display icons corresponding respectively to ones of said plurality of services and/or functions, the sweeping movement being spatially uncorrelated with information displayed on said touchscreen; and

when said touchscreen is displaying said plurality of display icons, launch one of said plurality of services and/or functions in response to the user tapping the object on said touchscreen at a location where said touchscreen displays the corresponding one of said plurality of display icons.

35. (withdrawn) An apparatus according to claim **34**, wherein said computing device contains a software application and said user interface is configured to present said plurality of display icons only if said software application is active during the sweeping movement of the object.

36. (withdrawn) An apparatus according to claim **35**, wherein when said software application is active during the sweeping of the object, said display icons correspond to services and/or functions specific to said software application.

37. (withdrawn) An apparatus, comprising:

PAGE 22/39 * RCVD AT 9/3/2008 3:08:58 AM [Eastern Daylight Time] * SVR:USPTO-EFXRF-6/10 * DNIS:2738300 * CSID:972 8 9315208 * DURATION (mm-ss):05-46

a computing device containing software for providing to a user a plurality of services and/or functions, said computing device including:

a touchscreen for displaying to the user, individually at differing times, ones of various display screens associated with said plurality of services and/or functions and for allowing the user to navigate among said plurality of display screens so as to provide the user with access to said plurality of services and/or functions and for allowing the user to control functioning of ones of said plurality of services and/or functions; and

user interface software responsive to a set of movements of an object with respect to said touchscreen so as to allow the user to navigate among said plurality of display screens and to control functioning of ones of said plurality of services and/or functions, said set of movements including a plurality of sweeping movements having differing directionalities along said touchscreen, wherein said plurality of sweeping movements being spatially uncorrelated with information displayed on said touchscreen, said user interface software being configured to distinguish the plurality of sweeping movements from one another as a function of the differing directionalities so as to provide differing responses as a function of said differing directionalities.

38. (withdrawn) An apparatus according to claim **37**, wherein two sweeping movements of the plurality of sweeping movements have opposing directionality and said user interface software is configured to provide two opposing responses corresponding respectively to said two sweeping movements.

PAGE 23/39 * RCVD AT 9/3/2008 3:08:58 AM [Eastern Daylight Time] * SVR:USPTO-EFXRF-6/10 * DNIS:2738300 * CSID:972 8 9315208 * DURATION (mm-ss):05-46

39. (withdrawn) An apparatus according to claim **38**, wherein one of the two opposing responses is moving forward in a series of display screens and the other of the two opposing responses is moving backward in the series of display screens.

40. (withdrawn) An apparatus according to claim **37**, wherein each of the plurality of sweeping movements does not drag any graphical feature displayed on said touchscreen during that one of the plurality of sweeping movements.

41. (withdrawn) An apparatus, comprising:

a computing device configured to provide a plurality of features, settings, applications and/or services to a user, said computing device including a user interface that comprises:

a touchscreen for displaying to the user a list of items corresponding to at least one of a plurality of features, settings, applications and/or services and for allowing the user to select any one of said items using said list; and

user interface software responsive to interaction of an object with said touchscreen so as to allow the user to navigate among said list and to select any one of said items, said user interface software configured to move a highlight marking, having a displayed location on said touchscreen, in a desired direction within said list in response to the user:

(a) contacting said touchscreen with the object at a first location that is a function of the desired direction, not said displayed location of said highlight marking;

PAGE 24/39 * RCVD AT 9/3/2008 3:08:58 AM [Eastern Daylight Time] * SVR:USPTO-EFXRF-6/10 * DNIS:2738300 * CSID:972 8 9315208 * DURATION (mm-ss):05-46

(b) while keeping the object in contact with said touchscreen, moving the object along said touchscreen in the desired direction to a second location; and

(c) immediately following said moving of the object along said touchscreen to said second location, lifting the object from said touchscreen so as to establish a new location of said highlight marking.

42. (withdrawn) An apparatus according to claim **41**, wherein said user interface software is configured to, after the user has marked a desired one of said items by performing steps (a) through (c) so as to highlight said desired one with the highlight marking, select said desired one in response to the user tapping the object on said touchscreen without regard to said display location of the highlight marking.

43. (withdrawn) An apparatus, comprising:

a computing device configured to provide a plurality of features, settings, applications and/or services to a user, said computing device including a user interface that comprises:

a touchscreen for displaying to the user a list of items corresponding to at least one of said plurality of features, settings, applications and/or services and for allowing the user to select any one of said items using said list; and

user interface software responsive to interaction of an object with said touchscreen so as to allow the user to scroll said list and to select any one of said plurality items, said user interface software configured to scroll said list in a desired direction in response to the user:

PAGE 25/39 * RCVD AT 9/3/2008 3:08:58 AM [Eastern Daylight Time] * SVR:USPTO-EFXRF-6/10 * DNIS:2738300 * CSID:972 8 9315208 * DURATION (mm-ss):05-46

(a) contacting said touchscreen with the object at a first location that is a function of the desired direction of said scroll and that is not based on any soft scroll control displayed on said touchscreen; and

(b) while keeping the object in contact with said touchscreen, moving the object along said touchscreen in the desired direction to a second location, wherein said moving of the object causes said list to scroll in the desired direction.

44. (withdrawn) An apparatus according to claim **43**, wherein said user interface software is configured to activate a selected one of said items in response to a user tapping the object on said touchscreen following the user lifting the object from the touchscreen after the user performs step (b).

45. (withdrawn) An apparatus according to claim **43**, wherein said items are files.

46. (withdrawn) An apparatus according to claim **43**, wherein said items are email messages.

47. (withdrawn) An apparatus according to claim **43**, wherein each item is contact information for a corresponding contact.

PAGE 26/39 * RCVD AT 9/3/2008 3:08:58 AM [Eastern Daylight Time] * SVR:USPTO-EFXRF-6/10 * DNIS:2738300 * CSID:972 8 9315208 * DURATION (mm-ss):05-46

REMARKS

Applicant has carefully studied the outstanding Office Action. The present amendment is intended to place the application in condition for allowance and is believed to overcome all of the objections and rejections made by the Examiner. Favorable reconsideration and allowance of the application are respectfully requested.

Applicant has withdrawn claims **19 – 47**, and amended claims **1 – 15** to properly claim the present invention. No new matter has been added. Claims **1 – 18** are presented for examination.

In paragraphs 1 - 8 of the Office Action, the Examiner has rejected claims **1, 4 – 7, 12, 15** and **17** under 35 U.S.C. §103(a) as being unpatentable over Carlson, F., Visual Quickstart Guide: Palm Organizers ("Carlson") in view of Milic-Frayling et al., US Publication No. 2004/0100510 ("Milic-Frayling"), and further in view of Conrad et al., US Patent No. 5,956,030 ("Conrad").

In paragraph 9 of the Office Action, the Examiner has rejected claims **2** and **3** under 35 U.S.C. §103(a) as being unpatentable over Carlson in view of Milic-Frayling, in view of Conrad, and further in view of Kopitzke et al., US Patent No. 6,988,246 ("Kopitzke").

In paragraph 10 – 13 of the Office Action, the Examiner has rejected claims **8 – 11** under 35 U.S.C. §103(a) as being unpatentable over Carlson in view of Milic-Frayling, in view of Conrad, and further in view of Wynn et al., US Patent No. 6,734,883 ("Wynn").

In paragraph 14 of the Office Action, the Examiner has rejected claim **13** under 35 U.S.C. §103(a) as being unpatentable over Carlson, in view of Milic-Frayling, and further in view of Conrad.

PAGE 27/39 * RCVD AT 9/3/2008 3:08:58 AM [Eastern Daylight Time] * SVR:USPTO-EFXRF-6/10 * DNIS:2738300 * CSID:972 8 9315208 * DURATION (mm-ss):05-46

In paragraphs 15 and 16 of the Office Action, the Examiner has rejected claims **14** and **16** under 35 U.S.C. §103(a) as being unpatentable over Carlson, in view of Milic-Frayling, in view of Conrad, and further in view of Strietelmeier, Palm m100, The Gadgeteer ("Strietelmeier").

In paragraphs 17 and 18 of the Office Action, the Examiner has rejected claim **18** under 35 U.S.C. §103(a) as being unpatentable over Carlson, in view of Milic-Frayling, in view of Conrad, and further in view of Chew et al., US Patent No. 6,727,917 ("Chew").

Distinctions between Claimed Invention and Carlson, F., Visual Quickstart Guide: Palm Organizers, US Publication No. 2004/0100510 of Milic-Frayling et al., US Patent No. 5,956,030 to Conrad et al., US Patent No. 6,988,246 to Kopitzke et al., US Patent No. 6,734,883 to Wynn et al., Strietelmeier, Palm m100, The Gadgeteer, and US Patent No. 6,727,917 to Chew et al.

Aspects of the subject invention concern a touch-based user interface with functionalities for running interactive applications using touch-based icons, for inputting text using a touch-based keypad, and for managing files using a touch-based file listing. User inputs include finger taps and thumb movements. One such movement is a thumb touch-and-glide, where the thumb touches a touch screen at a location where an icon for a function is displayed, and glides along the touch screen away from the location, as illustrated in FIG. 2 of the subject application.

Carlson describes how to use the Palm Organizer touch-based user interface. Through a series of pictures, Carlson shows how to

PAGE 28/39 * RCVD AT 9/3/2008 3:08:58 AM [Eastern Daylight Time] * SVR:USPTO-EFXRF-6/10 * DNIS:2738300 * CSID:972 8 9315208 * DURATION (mm-ss):05-46

run applications, view documents, access menus, and use an onscreen keyboard.

Milic-Frayling describes an interactive user interface for presenting search results on small display screens of handheld devices. Search results are annotated to highlight search hits, and text is wrapped so as to avoid the need for horizontal scrolling.

Conrad describes a window management system for keeping open windows offscreen in a drawer area (Conrad/ elements D1 – D4 of FIG. 1), and available for popping them back onscreen by clicking on a title bar or drawer handle of the offscreen window (Conrad/ FIGS. 2 – 4). Conrad also describes "spring loaded" enclosures for opening temporary windows for enclosure identifiers, during a drag operation (Conrad/ FIGS. 8A – 8D and 9A – 9E).

Kopitzke describes a touch-sensitive user interface for use in an aircraft with multiple cabin systems. A main menu (Kopitzke/ FIG. 4) provides an overview of cabin status, and information and data regarding the cabin systems. The main menu includes touch input keys for bringing up menus for each of the individual aircraft cabin systems, for monitoring and controlling their operation. Cabin systems include inter alia an audio system (Kopitzke/ FIG. 5), a video system, a lighting system (Kopitzke/ FIG. 6), a climate control system, a doors & hatches system (Kopitzke/ FIG. 7), a water supply system (Kopitzke/ FIG. 8), an electric power supply system, and a data communication system.

Wynn describes a user interface for spinning through a list of items. The user interface displays a preview list of items and a postview list of items on opposite sides of a currently selected item in the list (Wynn/ FIG. 7).

PAGE 29/39 * RCVD AT 9/3/2008 3:08:58 AM [Eastern Daylight Time] * SVR:USPTO-EFXRF-6/10 * DNIS:2738300 * CSID:972 8 9315208 * DURATION (mm-ss):05-46

Strietelmeier describes the mechanical casing, hardware components and software applications of the Palm m100 Organizer, in comparison with the Palm IIIc, the Palm V and the Handspring Visor.

Chew describes a user interface for running and interacting with multiple applications on small handheld device display screens. Chen describes a user interface display having a top portion with a navigation bar (Chew/ element 302 of FIG. 3) for navigating between different applications, a middle portion for graphically displaying outputs of a currently active application, and a bottom portion with an application menu bar (Chew/ element 304 of FIG. 3) for entering inputs to the currently active application.

The touch-based user interface of the subject claimed invention is generally operated by the thumb. The touch-based user interface of Carlson is generally operated by a stylus. Although, the user interface of Carlson may also be operated by the thumb, the natures of the two user interfaces are distinct. The subject claimed invention teaches "rubbing", "touch-and-glide" movements to operate a user interface, whereby the thumb touches a touch-sensitive screen and rubs, or glides, along the screen without lifting the thumb. In distinction, tap movements and one-stroke pen drags are used to operate the touch-based user interface of Carlson. In terms of motor skill, the touch-and-glide movements of the subject claimed invention are akin to pressing with the thumb on a mechanical slider button, such as the slider button with HI/LO/OFF settings on a hair-dryer handle, and sliding the button up or down while it is pressed.

The touch-and-glide movements of the subject claimed invention are illustrated in FIGS. 2, 7 and 10 by a left-arrow and a thumb touching a touch-sensitive screen.

PAGE 30/39 * RCVD AT 9/3/2008 3:08:58 AM [Eastern Daylight Time] * SVR:USPTO-EFXRF-6/10 * DNIS:2738300 * CSID:972 8 9315208 * DURATION (mm-ss):05-46

The touch-and-glide movements of the subject claimed invention are used to activate functions (original specification/ Abstract; page 2, lines 25 – 28; page 5, lines 24 – 27; FIG. 2; original claim **1**), and to scroll a selector forward and backward within a list to select a desired item in the list, and to page up and page down within a list (original specification/ page 3, lines 28 – page 4, line 2; page 7, lines 7 – 10; page 7, line 27 – page 9, line 14; FIGS. 7 and 10; original claims **7**, **9** and **10**).

The touch-and-glide movements of the subject claimed invention activate a function located at the touch point. The one-stroke pen drag movement of Carlson activates a pre-designated program, irrespective of where the pen drag begins; namely, the onscreen keyboard or a custom pre-designated program that may be substituted therefor.

Other conventional finger-based touch screens, such as the large touch screens used for self-serve check-in at airport terminals, use touch-sensitive input keys. In distinction, the touch-and-glide inputs of the subject claimed invention are of particular advantage for small handheld devices, where screen space is minimal.

Response to Examiner's Arguments

In rejecting independent claim **1**, the Examiner has cited the "one-stroke pen drag" (Carlson/ page 30; FIG. 2.22) as teaching that "*any one of said three functions can be activated when said touch sensitive area detects a movement of an object with its starting point within the representation of said function on said menu area and with a direction from said menu area to said display area*". In rejecting dependent claim **9**, the Examiner has cited dragging a vertical scroll bar

PAGE 31/39 * RCVD AT 9/3/2008 3:08:58 AM [Eastern Daylight Time] * SVR:USPTO-EFXRF-6/10 * DNIS:2738300 * CSID:972 8 9315208 * DURATION (mm-ss):05-46

(Carlson/ page 27). In rejecting dependent claim **12**, the Examiner has cited dragging a horizontal scroll bar (Carlson/ page 246; FIG. 14.2).

Applicant respectfully submits that the one-stroke drag of Carlson is very distinct from the location-based touch-and-glide movement of the subject invention (original specification/ FIG. 2). The following table summarizes some of the relevant distinctions.

TABLE I: Partial list of distinctions between one-stroke drag of Carlson and location-based touch-and-glide movement of the claimed invention

One-stroke drag	Location-based touch-and-glide
Default function is the onscreen keyboard; may be customized to activate a different pre-designated function.	The function displayed at the touch point is activated.
At any given time, may be used for activating only one pre-designated function.	At any given time, may be used for activating whichever function is touched, from among a plurality of functions.
The starting location has no bearing on the function that is activated.	The starting location determines which of the plurality of functions is activated.
Performed by a stylus.	Performed by the thumb.
Requires the user interface to recognize a vertical drag.	Requires the user interface to recognize a glide and identify the function displayed at the starting location of the glide.
Requires one hand to hold the device and another hand to perform the stylus movement.	The same hand may be used to hold the device and perform the thumb movement.
Not used for scrolling through a list.	Used for scrolling through a list.

Applicant further respectfully submits that the scroll slider drag of Carlson is very distinct from the location-based touch-and-glide movement of the subject invention. The following table summarizes some of the relevant distinctions.

PAGE 32/39 * RCVD AT 9/3/2008 3:08:58 AM [Eastern Daylight Time] * SVR:USPTO-EFXRF-6/10 * DNIS:2738300 * CSID:972 8 9315208 * DURATION (mm-ss):05-46

TABLE II: Partial list of distinctions between scroll slider drag of Carlson and location-based touch-and-glide movement of the claimed invention	
Scroll slider drag	**Location-based touch-and-glide**
Requires the user interface to recognize a horizontal drag or a vertical drag.	Requires the user interface to recognize a glide in any of a plurality of directions.
Performed by a stylus.	Performed by the thumb.
Requires one hand to hold the device and another hand to perform the stylus movement.	The same hand may be used to hold the device and perform the thumb movement.
Not used for scrolling through a list.	Used for scrolling through a list.

In order to clarify these distinctions, applicant has amended claim **1** to include the limitation of each function of said plurality of functions being activated by an object touching a location in the touch sensitive area at which the representation of the function is displayed and then gliding the object along the touch sensitive area away from the location.

Applicant has carefully reviewed all of the cited prior art. None of the cited prior art teaches the location-based touch-and-glide thumb movement of the subject claimed invention. Specifically, Milic-Frayling and Conrad do not use touch screens. Kopitzke uses touch input keys. Wynn mentions touch sensitive displays with stylus pens. Strietelmeier mentions writing with a stylus. Chew uses a stylus to tap on a touch screen.

The rejections of the claims **1 – 18** in paragraphs 1 - 18 of the Office Action will now be dealt with specifically.

As to amended independent claim **1** for a computer readable medium, applicant respectfully submits that the limitation in claim **1** of

"*each function of said plurality of functions being activated by an object touching a location in the touch sensitive area at*

PAGE 33/39 * RCVD AT 9/3/2008 3:08:58 AM [Eastern Daylight Time] * SVR:USPTO-EFXRF-6/10 * DNIS:2738300 * CSID:972 8 9315208 * DURATION (mm-ss):05-46

which the representation of the function is displayed and gliding along the touch sensitive area away from the location"
is neither shown nor suggested in Carlson, Milic-Frayling, Conrad, Kopitzke, Wynn, Strietelmeier or Chew.

Because claims **2 – 18** depend from claim **1** and include additional features, applicant respectfully submits that claims **2 – 18** are not anticipated or rendered obvious by Carlson, Milic-Frayling, Conrad, Kopitzke, Wynn, Strietelmeier, Chew, or a combination of Carlson, Milic-Frayling, Conrad, Kopitzke, Wynn, Strietelmeier and Chew.

Accordingly claims **1 – 18** are deemed to be allowable.

Support for Amended Claims in Original Specification

Independent claim **1** has been amended to include the limitation of an object touching a location in the touch sensitive area at which the representation of the function is displayed and gliding along the touch sensitive area away from the location. This limitation is supported in the original specification at least at FIGS. 2, 7 and 10.

For the foregoing reasons, applicant respectfully submits that the applicable objections and rejections have been overcome and that the claims are in condition for allowance.

Respectfully submitted,

Dated: _____ , 2008

_____
Marc A. Berger
Reg. No. 44,029

P.O. Box 691
Soquel, CA 95073
(831) 426-8200

PAGE 34/39 * RCVD AT 9/3/2008 3:08:58 AM [Eastern Daylight Time] * SVR:USPTO-EFXRF-6/10 * DNIS:2738300 * CSID:972 8 9315208 * DURATION (mm-ss):05-46

CLEAN VERSION OF PROPOSED AMENDED CLAIMS
WITHOUT MARKINGS – NOT TO BE ENTERED

1. A computer readable medium storing a computer program with computer program code, which, when read by a mobile handheld computer unit, allows the computer to present a user interface for the mobile handheld computer unit, the user interface comprising a touch sensitive area in which representations of a plurality of functions are displayed, and each function of said plurality of functions being activated by an object touching a location in the touch sensitive area at which the representation of the function is displayed and then gliding along the touch sensitive area away from the location.

2. The computer readable medium of claim **1**, wherein one function from the plurality of functions, when activated, causes the user interface to display icons representing different services or settings for a currently active application.

3. The computer readable medium of claim **2**, wherein the user interface is characterised in, that a selection of a preferred service or setting is done by tapping on a display icon corresponding to the preferred service or setting.

PAGE 35/39 * RCVD AT 9/3/2008 3:08:58 AM [Eastern Daylight Time] * SVR:USPTO-EFXRF-6/10 * DNIS:2738300 * CSID:972 8 9315208 * DURATION (mm-ss):05-46

4. The computer readable medium of claim **1**, wherein one function from the plurality of functions, when activated, causes the user interface to display a keyboard and a text field.

5. The computer readable medium of claim **4**, wherein said text field is used for inputting and editing of text through said keyboard.

6. The computer readable medium of claim **1**, wherein one function from the plurality of functions, when activated, causes the user interface to display a list with a library of available applications and files on the mobile handheld computer unit.

7. The computer readable medium of claim **6**, wherein the user interface is characterised in, that a selection of an application or file is done by gliding the object along said touch sensitive area so that a representation of a desired one of said application or file is highlighted, raising said object from said touch sensitive area, and then tapping on said touch sensitive area.

8. The computer readable medium of claim **7**, wherein the user interface is characterised in, that at any given time said list presents only files or only applications, and that ~~a~~ an area of said list presents a field through which said list can be changed from presenting files to presenting applications, or from presenting applications to presenting files.

PAGE 36/39 * RCVD AT 9/3/2008 3:08:58 AM [Eastern Daylight Time] * SVR:USPTO-EFXRF-6/10 * DNIS:2738300 * CSID:972 8 9315208 * DURATION (mm-ss):05-46

9. The computer readable medium of claim **7**, wherein the user interface is characterised in, that, navigation in said list is performed by gliding the object along the touch sensitive area in a direction towards the top of said list or towards the bottom of said list.

10. The computer readable medium of claim **9**, wherein the user interface is characterised in, that, if the number of applications or files in said list exceeds the number of applications or files that can be presented on said touch sensitive area as content, and if the object is glided along said touch sensitive area to the top or bottom position of said touch sensitive area, then raised, replaced on said touch sensitive area, and again glided along said touch sensitive area to the top or bottom of said touch sensitive area, the content of said touch sensitive area will be replaced one whole page.

11. The computer readable medium of claim **10**, wherein the user interface is characterised in, that if the object is raised from any first position on said touch sensitive area and then replaced on any second position on said touch sensitive area, said navigation can be continued from said second position.

PAGE 37/39 * RCVD AT 9/3/2008 3:08:58 AM [Eastern Daylight Time] * SVR:USPTO-EFXRF-6/10 * DNIS:2738300 * CSID:972 8 9315208 * DURATION (mm-ss):05-46

12. The computer readable medium of claim **1**, wherein the user interface is characterised in, that an active application, function, service or setting is moved on one step by gliding the object along the touch sensitive area from left to right, and that the active application, function, service or setting is closed or backed one step by gliding the object along the touch sensitive area from right to left.

13. The computer readable medium of claim **1**, wherein the user interface is characterised in, that said representations of said plurality of functions are located at the bottom of said touch sensitive area.

14. The computer readable medium of claim **1**, wherein the touch sensitive area is 2-3 inches in diagonal dimension.

15. An enclosure adapted to cover the mobile handheld computer unit according to Claim **1**, characterised in, that said enclosure is provided with an opening for said touch sensitive area.

16. The enclosure according to Claim **15**, characterised in, that said enclosure is removable and exchangeable.

PAGE 38/39 * RCVD AT 9/3/2008 3:08:58 AM [Eastern Daylight Time] * SVR:USPTO-EFXRF-6/10 * DNIS:2738300 * CSID:972 8 9315208 * DURATION (mm-ss):05-46

17. A computer readable medium, with a computer program product stored therein, characterised in, that said computer program product comprises computer readable code, which, when read by a computer, will make it possible for said computer to present a user interface according to Claim **1**.

18. A computer readable medium according to Claim **17**, characterised in, that said computer program product is adapted to function as a shell upon an operations system.

PAGE 39/39 * RCVD AT 9/3/2008 3:08:58 AM [Eastern Daylight Time] * SVR:USPTO-EFXRF-6/10 * DNIS:2738300 * CSID:972 8 9315208 * DURATION (mm-ss):05-46

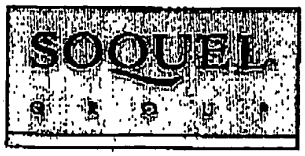

RECEIVED
CENTRAL FAX CENTER
SEP 0 3 2008

29 Aharoni Street, Suite #13 • Rechovot 76282 • Israel • Phone: 972-8-9315207 • Fax: 972-8-9315208

FACSIMILE COVER LETTER

Note: This facsimile contains PRIVILEGED and CONFIDENTIAL information intended only for use of the specific individual or entity named below. If you or your employer is not the intended recipient of this facsimile or an employee or agent responsible for delivering it to the intended recipient, you are hereby notified that any unauthorized dissemination or copying of this facsimile or the information contained in it is strictly prohibited. If you have received this facsimile in error, please immediately notify the person named below at once by telephone and return the original facsimile to us at the address below. Thank you.

SENDER'S NAME: Marc Berger
Soquel Group LLC
29 Aharoni Street, Suite #13
Rehovot 76282
ISRAEL

TRANSMISSION DATE: September 3, 2008

PLEASE DELIVER TO:

Recipient:	Examiner Ryan F. Pitaro, AU 2174
Firm:	**United States Patent & Trademark Office**
Fax No.:	571-273-8300
City/State/Country:	Alexandria, VA USA

COMMENTS:
Interview agenda for US Serial No. 10/315,250

WE ARE TRANSMITTING 39 PAGE(S) (including this cover letter) from:

FAX NO. 011-972-8-9315208

If you do not receive all of the pages or if any pages received are illegible, please contact our office.

PAGE 1/2 * RCVD AT 9/3/2008 3:05:52 AM [Eastern Daylight Time] * SVR:USPTO-EFXRF-6/9 * DNIS:2738300 * CSID:972 8 9315208 * DURATION (mm-ss):01-06

RECEIVED
CENTRAL FAX CENTER

SEP 0 3 2008

PTO/SB/81 (07-06)
Approved for use through 12/31/2008. OMB 0651-0035
U.S. Patent and Trademark Office; U.S. DEPARTMENT OF COMMERCE
Under the Paperwork Reduction Act of 1995, no persons are required to respond to a collection of information unless it displays a valid OMB control number.

POWER OF ATTORNEY OR REVOCATION OF POWER OF ATTORNEY WITH A NEW POWER OF ATTORNEY AND CHANGE OF CORRESPONDENCE ADDRESS

Application Number	10/315,250
Filing Date	December 10, 2002
First Named Inventor	Magnus Goertz
Title	USER INTERFACE
Art Unit	2174
Examiner Name	Pham, Ryan F.
Attorney Docket Number	NEONODE.P004

I hereby revoke all previous powers of attorney given in the above-identified application.

☐ A Power of Attorney is submitted herewith.

OR

☒ I hereby appoint Practitioner(s) associated with the following Customer Number as my/our attorney(s) or agent(s) to prosecute the application identified above, and to transact all business in the United States Patent and Trademark Office connected therewith: 75660

OR

☐ I hereby appoint Practitioner(s) named below as my/our attorney(s) or agent(s) to prosecute the application identified above, and to transact all business in the United States Patent and Trademark Office connected therewith:

Practitioner(s) Name	Registration Number

Please recognize or change the correspondence address for the above-identified application to:

☒ The address associated with the above-mentioned Customer Number.

OR

☐ The address associated with Customer Number:

OR

☐ Firm or Individual Name					
Address					
City		State		Zip	
Country					
Telephone		Email			

I am the:

☐ Applicant/Inventor.

OR

☒ Assignee of record of the entire interest. See 37 CFR 3.71.
Statement under 37 CFR 3.73(b) (Form PTO/SB/96) submitted herewith or filed on _____

Signature	SIGNATURE of Applicant or Assignee of Record	Date	28 August 2008
Name	Per Bystedt	Telephone	+46 8 678 1850
Title and Company	CEO, Neonode		

NOTE: Signatures of all the inventors or assignees of record of the entire interest or their representative(s) are required. Submit multiple forms if more than one signature is required, see below*.

☐ *Total of _____ forms are submitted.

This collection of information is required by 37 CFR 1.31, 1.32 and 1.33. The information is required to obtain or retain a benefit by the public which is to file (and by the USPTO to process) an application. Confidentiality is governed by 35 U.S.C. 122 and 37 CFR 1.11 and 1.14. This collection is estimated to take 3 minutes to complete, including gathering, preparing, and submitting the completed application form to the USPTO. Time will vary depending upon the individual case. Any comments on the amount of time you require to complete this form and/or suggestions for reducing this burden, should be sent to the Chief Information Officer, U.S. Patent and Trademark Office, U.S. Department of Commerce, P.O. Box 1450, Alexandria, VA 22313-1450. DO NOT SEND FEES OR COMPLETED FORMS TO THIS ADDRESS. **SEND TO: Commissioner for Patents, P.O. Box 1450, Alexandria, VA 22313-1450.**

If you need assistance in completing the form, call 1-800-PTO-9199 and select option 2.

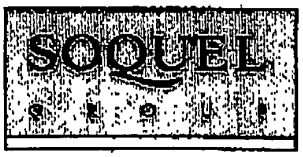

RECEIVED
CENTRAL FAX CENTER
SEP 0 3 2008

29 Aharoni Street, Suite #13 • Rechovot 76282 • Israel • Phone: 972-8-9315207 • Fax: 972-8-9315208

FACSIMILE COVER LETTER

Note: This facsimile contains PRIVILEGED and CONFIDENTIAL information intended only for use of the specific individual or entity named below. If you or your employer is not the intended recipient of this facsimile or an employee or agent responsible for delivering it to the intended recipient, you are hereby notified that any unauthorized dissemination or copying of this facsimile or the information contained in it is strictly prohibited. If you have received this facsimile in error, please immediately notify the person named below at once by telephone and return the original facsimile to us at the address below. Thank you.

SENDER'S NAME: Marc Berger
Soquel Group LLC
29 Aharoni Street, Suite #13
Rehovot 76282
ISRAEL

TRANSMISSION DATE: September 3, 2008

PLEASE DELIVER TO:

Recipient:	Examiner Ryan F. Pitaro, AU 2174
Firm:	**United States Patent & Trademark Office**
Fax No.:	571-273-8300
City/State/Country:	Alexandria, VA USA

COMMENTS:
Interview agenda for US Serial No. 10/315,250

WE ARE TRANSMITTING 39 PAGE(S) (including this cover letter) from:

FAX NO. 011-972-8-9315208

If you do not receive all of the pages or if any pages received are illegible, please contact our office.

PAGE 1/2 * RCVD AT 9/3/2008 3:04:12 AM [Eastern Daylight Time] * SVR:USPTO-EFXRF-6/8 * DNIS:2738300 * CSID:972 8 9315208 * DURATION (mm-ss):01-00

RECEIVED
CENTRAL FAX CENTER

SEP 0 3 2008

PTO/SB/81 (07-08)
Approved for use through 12/31/2008. OMB 0651-0035
U.S. Patent and Trademark Office; U.S. DEPARTMENT OF COMMERCE
Under the Paperwork Reduction Act of 1995, no persons are required to respond to a collection of information unless it displays a valid OMB control number.

POWER OF ATTORNEY OR REVOCATION OF POWER OF ATTORNEY WITH A NEW POWER OF ATTORNEY AND CHANGE OF CORRESPONDENCE ADDRESS

Application Number	10/315,250
Filing Date	December 10, 2002
First Named Inventor	Magnus Goertz
Title	USER INTERFACE
Art Unit	2174
Examiner Name	Pham, Ryan F.
Attorney Docket Number	NEONODE.P004

I hereby revoke all previous powers of attorney given in the above-identified application.

☐ A Power of Attorney is submitted herewith.

OR

☒ I hereby appoint Practitioner(s) associated with the following Customer Number as my/our attorney(s) or agent(s) to prosecute the application identified above, and to transact all business in the United States Patent and Trademark Office connected therewith: 75660

OR

☐ I hereby appoint Practitioner(s) named below as my/our attorney(s) or agent(s) to prosecute the application identified above, and to transact all business in the United States Patent and Trademark Office connected therewith:

Practitioner(s) Name	Registration Number

Please recognize or change the correspondence address for the above-identified application to:

☒ The address associated with the above-mentioned Customer Number.

OR

☐ The address associated with Customer Number:

OR

☐ Firm or Individual Name					
Address					
City		State		Zip	
Country					
Telephone		Email			

I am the:

☐ Applicant/inventor.

OR

☒ Assignee of record of the entire interest. See 37 CFR 3.71.
Statement under 37 CFR 3.73(b) (Form PTO/SB/96) submitted herewith or filed on _____

SIGNATURE of Applicant or Assignee of Record

Signature	[signature]	Date	28 August 2008
Name	Per Bystedt	Telephone	+46 8 678 1850
Title and Company	CEO, Neonode		

NOTE: Signatures of all the inventors or assignees of record of the entire interest or their representative(s) are required. Submit multiple forms if more than one signature is required, see below*.

☐ *Total of _____ forms are submitted.

This collection of information is required by 37 CFR 1.31, 1.32 and 1.33. The information is required to obtain or retain a benefit by the public which is to file (and by the USPTO to process) an application. Confidentiality is governed by 35 U.S.C. 122 and 37 CFR 1.11 and 1.14. This collection is estimated to take 3 minutes to complete, including gathering, preparing, and submitting the completed application form to the USPTO. Time will vary depending upon the individual case. Any comments on the amount of time you require to complete this form and/or suggestions for reducing this burden, should be sent to the Chief Information Officer, U.S. Patent and Trademark Office, U.S. Department of Commerce, P.O. Box 1450, Alexandria, VA 22313-1450. DO NOT SEND FEES OR COMPLETED FORMS TO THIS ADDRESS. SEND TO: **Commissioner for Patents, P.O. Box 1450, Alexandria, VA 22313-1450.**

If you need assistance in completing the form, call 1-800-PTO-9199 and select option 2.

BEST AVAILABLE COPY

UNITED STATES PATENT AND TRADEMARK OFFICE

UNITED STATES DEPARTMENT OF COMMERCE
United States Patent and Trademark Office
Address: COMMISSIONER FOR PATENTS
P.O. Box 1450
Alexandria, Virginia 22313-1450
www.uspto.gov

APPLICATION NUMBER	FILING OR 371(C) DATE	FIRST NAMED APPLICANT	ATTY. DOCKET NO./TITLE
10/315,250	12/10/2002	Magnus Goertz	3682-32

CONFIRMATION NO. 1226

23117
NIXON & VANDERHYE, PC
901 NORTH GLEBE ROAD, 11TH FLOOR
ARLINGTON, VA 22203

POWER OF ATTORNEY NOTICE

OC000000031414766

Date Mailed: 08/06/2008

NOTICE REGARDING CHANGE OF POWER OF ATTORNEY

This is in response to the Power of Attorney filed 07/24/2008.

- The Power of Attorney to you in this application has been revoked by the assignee who has intervened as provided by 37 CFR 3.71. Future correspondence will be mailed to the new address of record(37 CFR 1.33).

/nhtang/

Office of Data Management, Application Assistance Unit (571) 272-4000, or (571) 272-4200, or 1-888-786-0101

UNITED STATES PATENT AND TRADEMARK OFFICE

UNITED STATES DEPARTMENT OF COMMERCE
United States Patent and Trademark Office
Address: COMMISSIONER FOR PATENTS
P.O. Box 1450
Alexandria, Virginia 22313-1450
www.uspto.gov

APPLICATION NUMBER	FILING OR 371(C) DATE	FIRST NAMED APPLICANT	ATTY. DOCKET NO./TITLE
10/315,250	12/10/2002	Magnus Goertz	3682-32

CONFIRMATION NO. 1226

60956
Professional Patent Solutions
P.O. BOX 654
HERZELIYA PITUACH, 46105
ISRAEL

POA ACCEPTANCE LETTER

OC000000031414774

Date Mailed: 08/06/2008

NOTICE OF ACCEPTANCE OF POWER OF ATTORNEY

This is in response to the Power of Attorney filed 07/24/2008.

The Power of Attorney in this application is accepted. Correspondence in this application will be mailed to the above address as provided by 37 CFR 1.33.

/nhtang/

Office of Data Management, Application Assistance Unit (571) 272-4000, or (571) 272-4200, or 1-888-786-0101