Filed: August 26, 2021

UNITED STATES PATENT AND TRADEMARK OFFICE

BEFORE THE PATENT TRIAL AND APPEAL BOARD

MICROSOFT CORPORATION and HP INC.,
Petitioner,

v.

SYNKLOUD TECHNOLOGIES, LLC,
Patent Owner.

Case No. IPR2020-01031
U.S. Patent No. 10,015,254

PETITIONERS' DEMONSTRATIVE EXHIBITS

September 2, 2021

Microsoft Corp. and HP Inc. v. Synkloud Technologies, LLC

IPR2020-01031

IPR2020-01032

U.S. Patent No. 10,015,254

SIDLEY

Grounds

Claim(s) Challenged	35 U.S.C §	Reference(s)/Basis
1–5, 8, 16–18	103(a)[1]	McCown,[2] Dutta[3]
6, 7, 19, 20	103(a)	McCown, Dutta, Coates[4]

1031 Institution Decision, 6

Claim(s) Challenged	35 U.S.C §	Reference(s)/Basis
9–13, 15	103(a)[1]	McCown,[2] Dutta[3]
9–15	103(a)	McCown, Dutta, Coates[4]

1032 Institution Decision, 6

Roadmap

254 Patent Overview

Prior Art Overview

Patentability Issues

Roadmap

254 Patent Overview

Prior Art Overview

Patentability Issues

254 Patent Overview

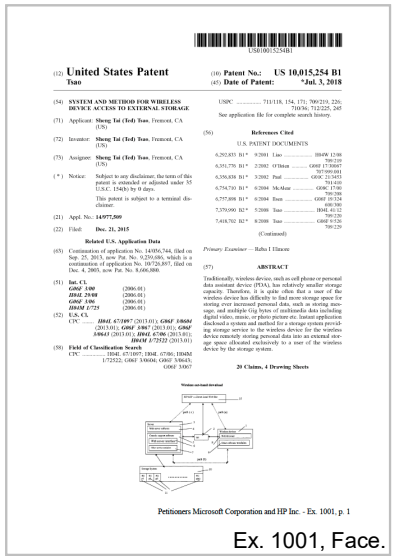

(12) **United States Patent**
Tsao

(10) **Patent No.: US 10,015,254 B1**
(45) **Date of Patent: *Jul. 3, 2018**

(54) **SYSTEM AND METHOD FOR WIRELESS DEVICE ACCESS TO EXTERNAL STORAGE**

(71) Applicant: **Sheng Tai (Ted) Tsao**, Fremont, CA (US)

(72) Inventor: **Sheng Tai (Ted) Tsao**, Fremont, CA (US)

(73) Assignee: **Sheng Tai (Ted) Tsao**, Fremont, CA (US)

(*) Notice: Subject to any disclaimer, the term of this patent is extended or adjusted under 35 U.S.C. 154(b) by 0 days.

This patent is subject to a terminal disclaimer.

(21) Appl. No.: **14/977,509**

(22) Filed: **Dec. 21, 2015**

Related U.S. Application Data

(63) Continuation of application No. 14/036,744, filed on Sep. 25, 2013, now Pat. No. 9,239,686, which is a continuation of application No. 10/726,897, filed on Dec. 4, 2003, now Pat. No. 8,606,880.

USPC 711/118, 154, 171; 709/219, 226; 710/36; 712/225, 245
See application file for complete search history.

(56) **References Cited**

U.S. PATENT DOCUMENTS

6,292,833	B1 *	9/2001	Liao	H04W 12/08 709/219
6,351,776	B1 *	2/2002	O'Brien	G06F 17/30067 707/999.001
6,356,838	B1 *	3/2002	Paul	G01C 21/3453 701/410
6,754,710	B1 *	6/2004	McAlear	G08C 17/00 709/208
6,757,898	B1 *	6/2004	Ilsen	G06F 19/324 600/300
7,379,990	B2 *	5/2008	Tsao	H04L 41/12 709/220
7,418,702	B2 *	8/2008	Tsao	G06F 9/526 709/229

(Continued)

Primary Examiner — Reba I Elmore

(57) **ABSTRACT**

Ex. 1001, Face.

Petitioners Microsoft Corporation and HP Inc. - Ex. 1001, p. 1

Ex. 1001, Face.

254 Patent Overview

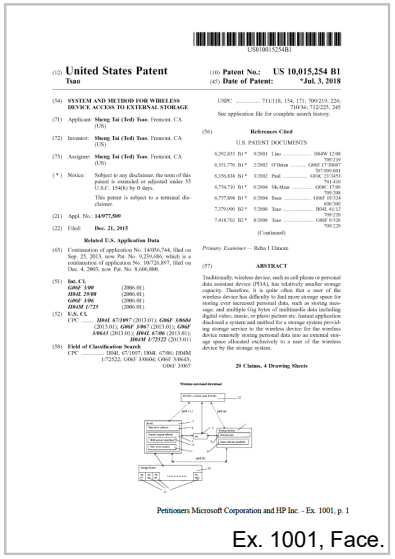

US010015254B1

(12) **United States Patent**
Tsao

(10) **Patent No.: US 10,015,254 B1**
(45) **Date of Patent: *Jul. 3, 2018**

(54) **SYSTEM AND METHOD FOR WIRELESS DEVICE ACCESS TO EXTERNAL STORAGE**

(71) Applicant: **Sheng Tai (Ted) Tsao**, Fremont, CA (US)

(72) Inventor: **Sheng Tai (Ted) Tsao**, Fremont, CA (US)

(73) Assignee: **Sheng Tai (Ted) Tsao**, Fremont, CA (US)

(*) Notice: Subject to any disclaimer, the term of this patent is extended or adjusted under 35 U.S.C. 154(b) by 0 days.

This patent is subject to a terminal disclaimer.

(21) Appl. No.: **14/977,809**

(22) Filed: **Dec. 21, 2015**

Related U.S. Application Data

(63) Continuation of application No. 14/056,744, filed on Sep. 25, 2013, now Pat. No. 9,239,686, which is a continuation of application No. 10/720,897, filed on Dec. 4, 2003, now Pat. No. 8,666,860.

(51) **Int. Cl.**
G06F 3/00 (2006.01)
H04L 29/08 (2006.01)
G06F 3/06 (2006.01)
H04M 1/725 (2006.01)

(52) U.S. Cl.
CPC ***H04L 67/1097*** (2013.01); ***G06F 3/0604*** (2013.01); ***G06F 3/067*** (2013.01); ***G06F 3/0643*** (2013.01); ***H04L 67/06*** (2013.01); ***H04M 1/72522*** (2013.01)

(58) **Field of Classification Search**
CPC H04L 67/1097; H04L 67/06; H04M 1/72522; G06F 3/0604; G06F 3/0643; G06F 3/067

USPC 711/118, 154, 171; 709/219, 226; 710/36, 712/225, 245

See application file for complete search history.

(56) **References Cited**

U.S. PATENT DOCUMENTS

6,292,833	B1 *	9/2001	Liao	H04W 12/08 709/219
6,351,770	B1 *	2/2002	O'Brien	G06F 17/30067 709/203
6,356,838	B1 *	3/2002	Paul	G06C 21/3453 701/410
6,754,710	B1 *	6/2004	McAfee	G06C 17/00 709/238
6,757,898	B1 *	6/2004	Ilsen	G06F 9/4411 717/168
7,379,950	B2 *	5/2008	Tsao	H04L 41/12 709/220
7,418,702	B2 *	8/2008	Tsao	G06F 9/328 709/229

(Continued)

Primary Examiner — Rehna I Hasan

(57) **ABSTRACT**

Traditionally, wireless device, such as cell phone or personal data assistant device (PDA), has relatively smaller storage capacity. Therefore, it is quite often that a user of the wireless device has to delete data in order to continue storing ever increased personal data, such as storing music, and multiple Gig bytes of multimedia data including digital video, music, or photo picture etc. Instant application disclosed a system and method for a storage system providing storage service to the wireless device for the wireless device remotely storing personal data into an external storage space allocated exclusively to a user of the wireless device by the storage system.

20 Claims, 4 Drawing Sheets

Wireless out-band download
ISP/ASP ----Down Load Web Site
15
path (c)
path (a)
Server
Web server software
Console support software
Web server interface
Other service modules
net
Wireless devices
Web-browser
Other software modules
path (b)
Storage System
4G p1
4G p2
4G p3
4G p(n)
1
2
3
4
5
6
7
8
9
10
11

Petitioners Microsoft Corporation and HP Inc. - Ex. 1001, p. 1

Ex. 1001, Face.

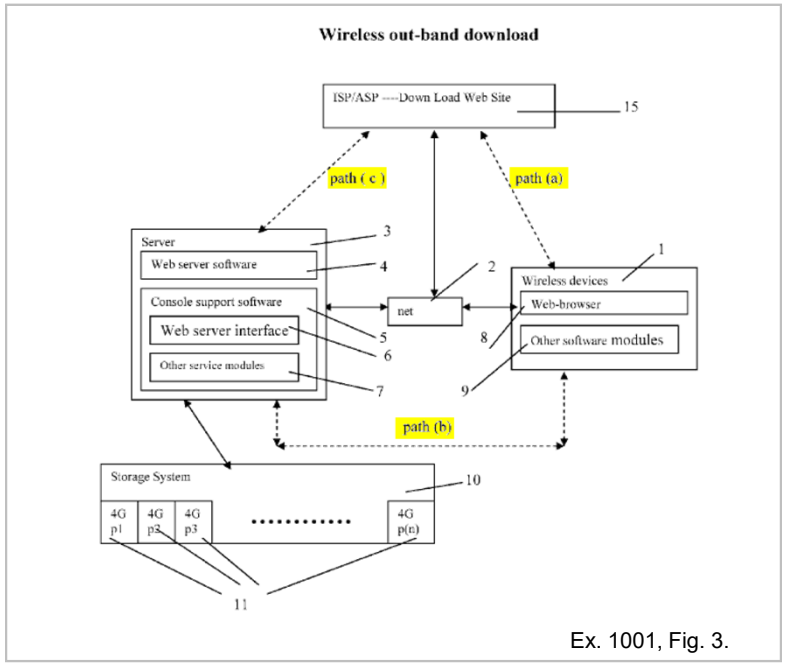

Ex. 1001, Fig. 3.

1. A wireless device accessing a remote storage space, the wireless device comprising:

at least one cache storage for caching data received from the Internet, and

one computer-readable storage device comprising program instructions which, when executed by the wireless device, configure the wireless device accessing the remote storage space, wherein the program instructions comprise:

program instructions for the wireless device establishing a communication link for accessing the remote storage space served by a first server;

program instructions for the wireless device displaying the remote storage space upon receiving information of the remote storage space from the first server; and

program instructions for the wireless device coupling with the first server to carry out a requested operation for accessing the remote storage space in response to a user, through the remote storage space displayed on the wireless device, performing the operation,

wherein the operation being carried out for accessing the remote storage space comprises from the wireless device storing data therein or retrieving data therefrom, the storing data comprising to download a file from a second server across a network into the remote storage space through utilizing information for the file cached in the cache storage in the wireless device.

Ex. 1001, Claim 1.

Roadmap

254 Patent Overview

Prior Art Overview

Patentability Issues

WO 01/67233 A2 to McCown et al. ("McCown")

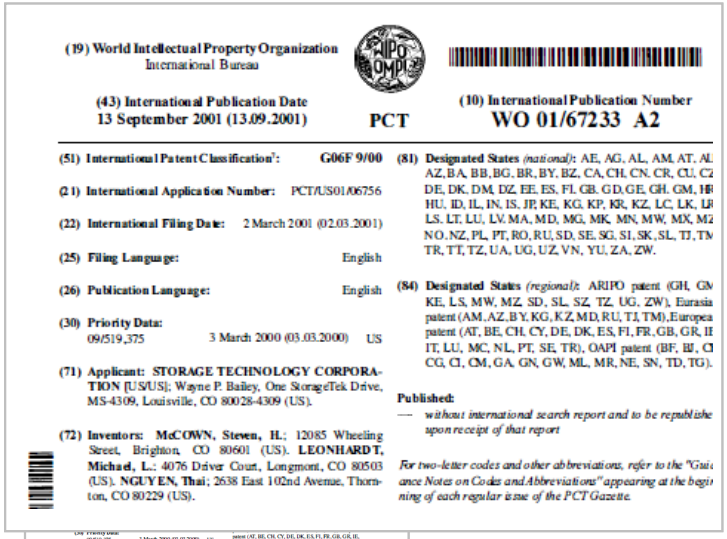

(19) World Intellectual Property Organization
International Bureau

(43) International Publication Date
13 September 2001 (13.09.2001)

PCT

(10) International Publication Number
WO 01/67233 A2

(51) International Patent Classification[7]: G06F 9/00

(21) International Application Number: PCT/US01/06756

(22) International Filing Date: 2 March 2001 (02.03.2001)

(25) Filing Language: English

(26) Publication Language: English

(30) Priority Data:
09/519,375 3 March 2000 (03.03.2000) US

(71) Applicant: STORAGE TECHNOLOGY CORPORATION [US/US]; Wayne P. Bailey, One StorageTek Drive, MS-4309, Louisville, CO 80028-4309 (US).

(72) Inventors: McCOWN, Steven, H.; 12085 Wheeling Street, Brighton, CO 80601 (US). LEONHARDT, Michael, L.; 4076 Driver Court, Longmont, CO 80503 (US). NGUYEN, Thai; 2638 East 102nd Avenue, Thornton, CO 80229 (US).

(81) Designated States (national): AE, AG, AL, AM, AT, AU, AZ, BA, BB, BG, BR, BY, BZ, CA, CH, CN, CR, CU, CZ, DE, DK, DM, DZ, EE, ES, FI, GB, GD, GE, GH, GM, HR, HU, ID, IL, IN, IS, JP, KE, KG, KP, KR, KZ, LC, LK, LR, LS, LT, LU, LV, MA, MD, MG, MK, MN, MW, MX, MZ, NO, NZ, PL, PT, RO, RU, SD, SE, SG, SI, SK, SL, TJ, TM, TR, TT, TZ, UA, UG, UZ, VN, YU, ZA, ZW.

(84) Designated States (regional): ARIPO patent (GH, GM, KE, LS, MW, MZ, SD, SL, SZ, TZ, UG, ZW), Eurasian patent (AM, AZ, BY, KG, KZ, MD, RU, TJ, TM), European patent (AT, BE, CH, CY, DE, DK, ES, FI, FR, GB, GR, IE, IT, LU, MC, NL, PT, SE, TR), OAPI patent (BF, BJ, CF, CG, CI, CM, GA, GN, GW, ML, MR, NE, SN, TD, TG).

Published:
— without international search report and to be republished upon receipt of that report

For two-letter codes and other abbreviations, refer to the "Guidance Notes on Codes and Abbreviations" appearing at the beginning of each regular issue of the PCT Gazette.

(54) Title: METHOD FOR NETWORK-BASED STORAGE SITE SERVICES

(57) Abstract: Selected files are downloaded across a network from a remote site into a client's storage space account established within a storage site. Selection of the files is provided by a client operating at a user site connected to the network. A data request identifying the selected files to be downloaded, and containing an identifier is generated at the user site and sent to the storage site. The storage site authenticates the identifier, and if successful, generates and sends a download request to the remote site to download the selected files. The remote site responds to the download request by downloading the selected files to the storage site where they are stored in the client's storage space account.

WO 01/67233 A2

Ex. 1005, Face.

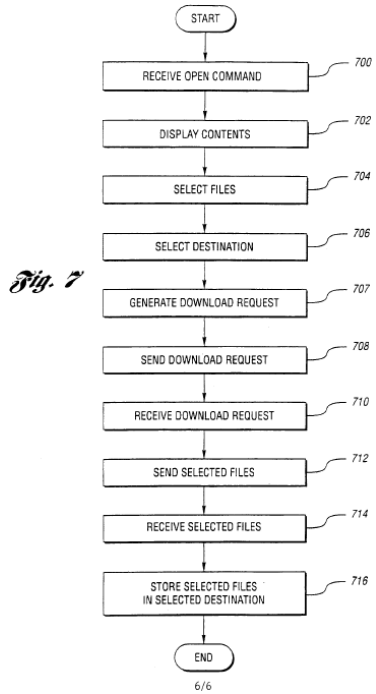

Fig. 7

Ex. 1005, Fig. 7(cited in Pet., 34).

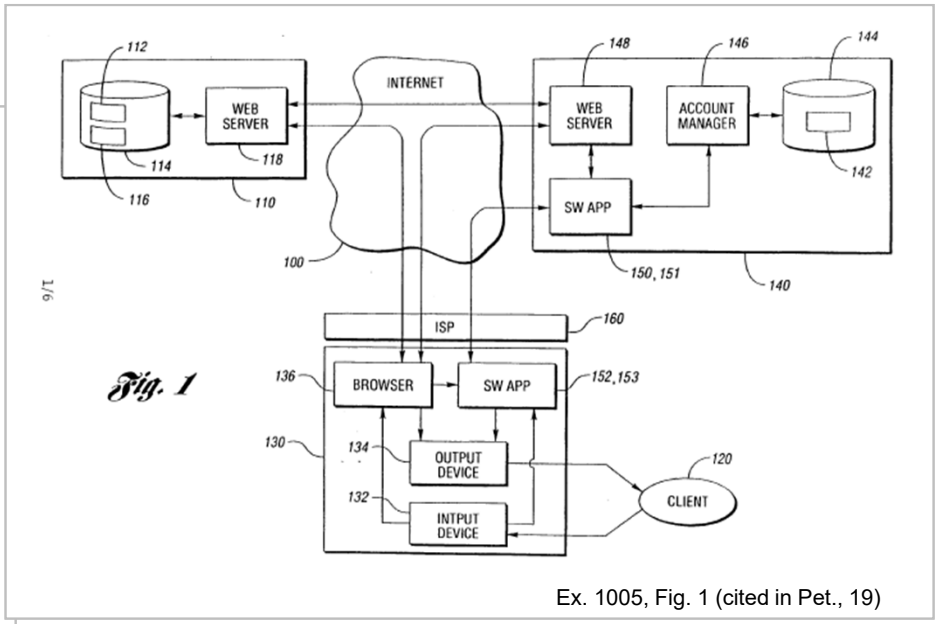

Fig. 1

Ex. 1005, Fig. 1 (cited in Pet., 19)

WO 01/67233 A2 to McCown et al. ("McCown")

FIG. 2 is a flow diagram of a method for determining what files 112 are available in the remote site 110 for downloading. The method begins when the user site 130 generates a file list request asking the remote site 110 for a web page containing the file list 116, as shown in block 200. User site 130 then initiates a

Ex. 1005, 10:18-21.

File lists 116 are also stored on the remote site's storage medium 114. File lists 116 provide information used externally to the remote site 110 to identify each file 112, usually by a file name and by a file location. In Internet terminology, file identification is provided by a Uniform Resource Locator (URL)(IAB proposed standard protocol RFC 1738) that defines the Internet protocol scheme, a host name of the remote site 110, a file path from a root directory within the remote site 110, the file name with an extension type. The URL's that collectively form the file lists 116 are typically, although not always, presented externally to the remote site 110 as web pages or directories.

Ex. 1005, 7:8-16.

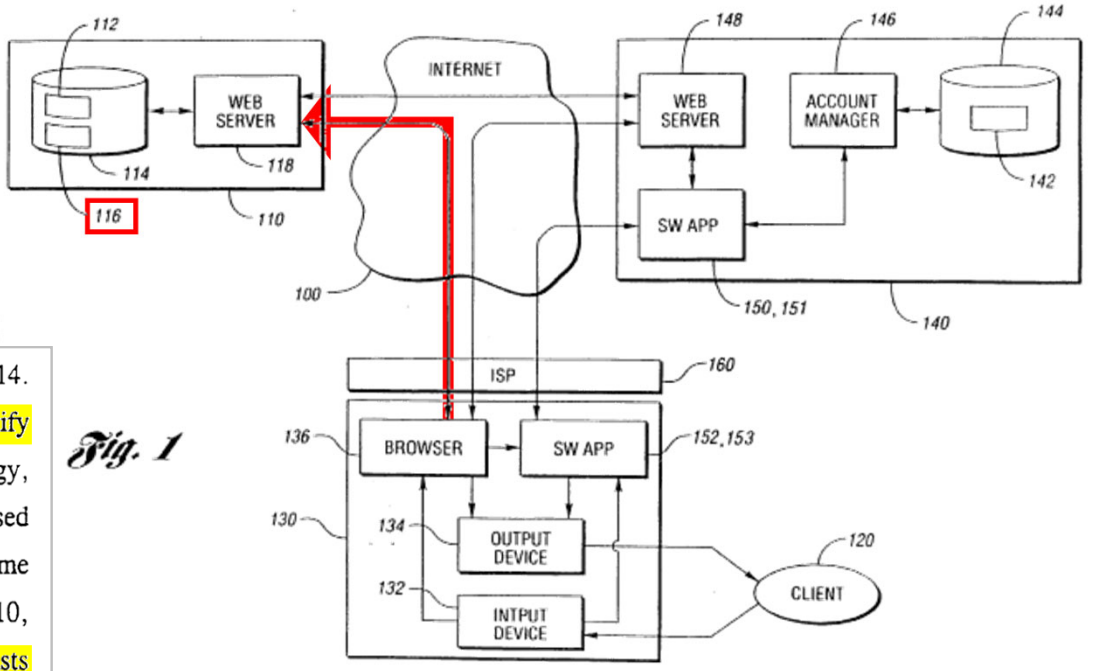

Fig. 1

Ex. 1005, Fig. 1 (cited in Pet., 19)

WO 01/67233 A2 to McCown et al. ("McCown")

of the file list, as shown in block 204. The remote site 110 responds to the file list request by sending the web page requested, as shown in block 206. User site 130 receives the web page from the remote site 110, as shown in block 208, then displays the web page through an output device 134 to the client 120, as shown in block 210. From the display, the client 120 can see all of the files 112 identified by the file list 116 embedded within that particular web page. This particular file list 116 may

Ex. 1005, 10:24-29.

A browser 136 links the input devices 132 and output devices 134 to the Internet 100. Browser 136 may be a commercially available software package such as Internet Explorer available from Microsoft Corporation, Redmond, WA and Netscape Communicator available from Netscape Communications Corporation, Mountain View, CA. Other items that support the Internet protocols may be used within the scope of the present invention.

Ex. 1005, 8:5-10.

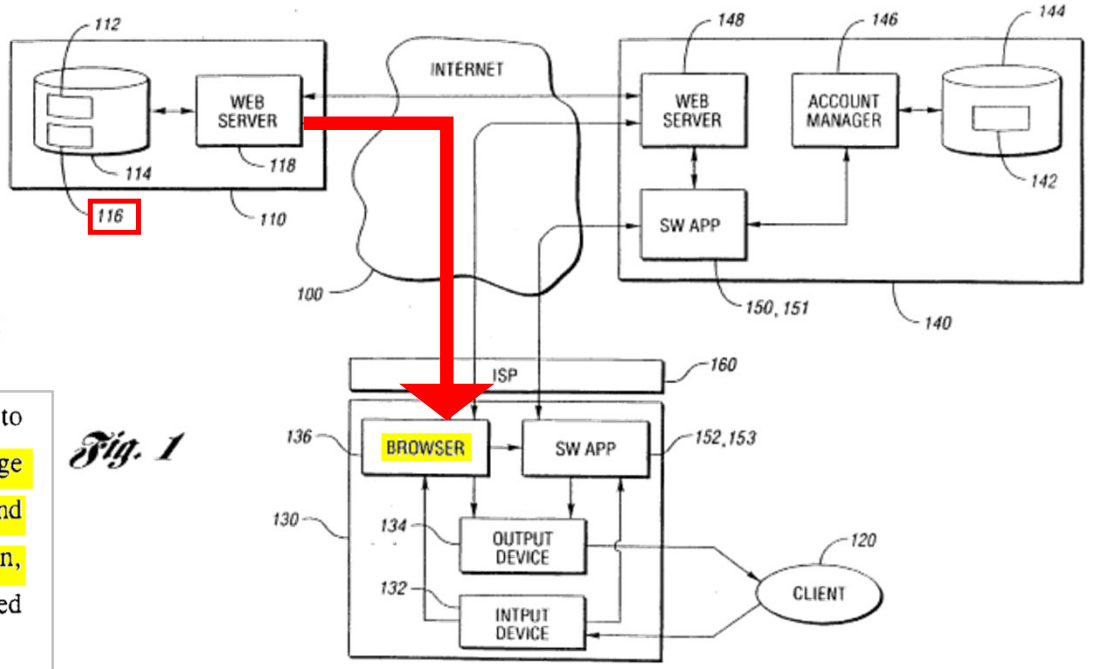

Fig. 1

Ex. 1005, Fig. 1 (cited in Pet., 19)

WO 01/67233 A2 to McCown et al. ("McCown")

The client 120 now selects files 112 for downloading. Referring to FIG. 3, selection may be accomplished using an input device 132, such as a mouse, to graphically choose one or more files from the displayed web page, as shown in block 300. Additionally, the client 120 may enter the URL's of selected files

* * *

The user site software application 152 uses the URL's to generate a data request, as shown in block 305. The data request is then sent across the Internet 100 to the storage site software application 150, as shown in block 306. Each data request contains the URL's of the selected files 112. An identifier may be included

Ex. 1005, 11:4-23.

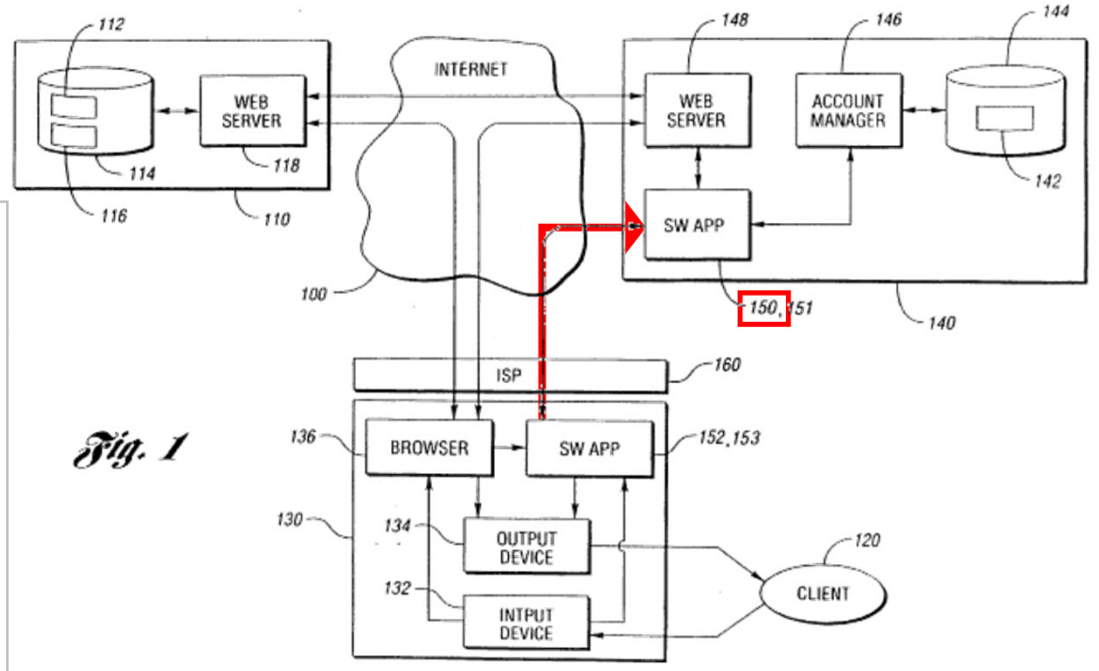

Fig. 1

Ex. 1005, Fig. 1 (cited in Pet., 19)

WO 01/67233 A2 to McCown et al. ("McCown")

Where the data request passes authentication, as shown by the PASS branch of decision block 310, then the URL's within the data request are used to generate a download request, as shown in block 319. The download request is then provided to the storage site's web server 148. Web server 148 sends the data request to the remote site 110, as shown in block 320. Remote site 110 receives the download request, block 322, and responds by downloading the files 112 identified by the URL's to the storage site 140, as shown in block 324. Storage site 140

Ex. 1005, 12:23-29.

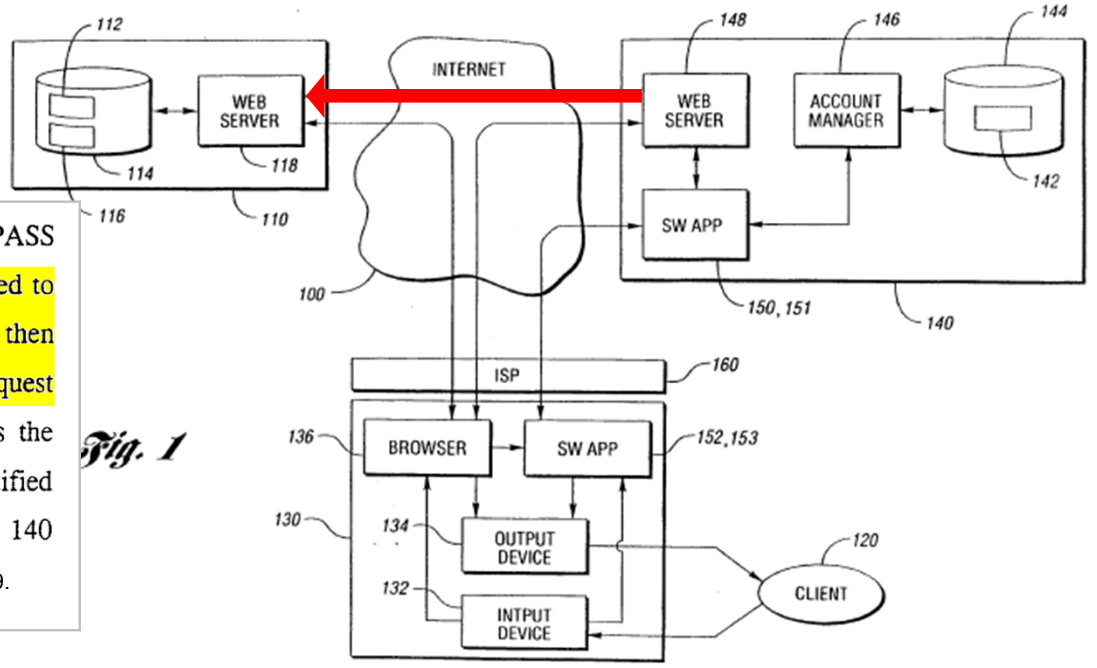

Fig. 1

Ex. 1005, Fig. 1 (cited in Pet., 19)

Ex. 1005, Fig. 7 (cited in Pet., 14, 38).

WO 01/67233 A2 to McCown et al. ("McCown")

Where the data request passes authentication, as shown by the PASS branch of decision block 310, then the URL's within the data request are used to generate a download request, as shown in block 319. The download request is then provided to the storage site's web server 148. Web server 148 sends the data request to the remote site 110, as shown in block 320. Remote site 110 receives the download request, block 322, and responds by downloading the files 112 identified by the URL's to the storage site 140, as shown in block 324. Storage site 140

Ex. 1005, 12:23-29.

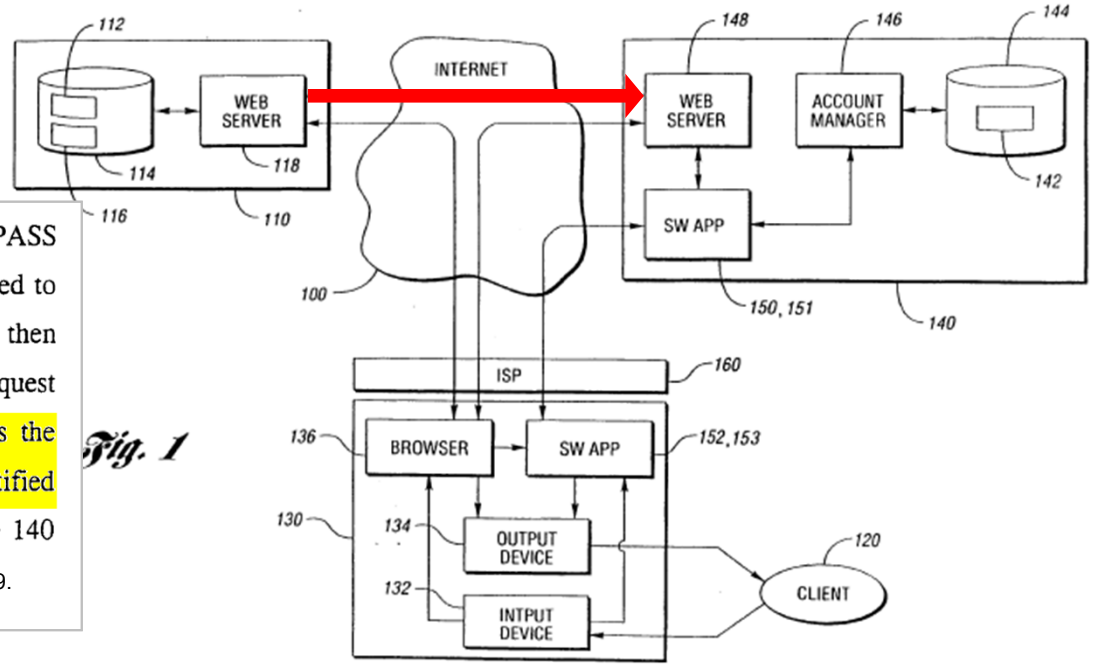

Fig. 1

Ex. 1005, Fig. 1 (cited in Pet., 19)

Ex. 1005, Fig. 7 (cited in Pet., 14, 38).

U.S. Patent Application Pub. No. 2002/0078102 A1 to Dutta ("Dutta")

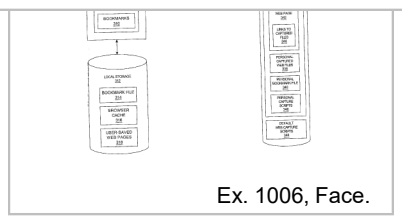

(19) **United States**

(12) **Patent Application Publication** (10) **Pub. No.: US 2002/0078102 A1**

Dutta (43) **Pub. Date: Jun. 20, 2002**

(54) **METHOD AND SYSTEM FOR CUSTOMIZED MODIFICATION AND PRESENTATION OF REMOTELY SAVED WEB CONTENT**

(75) Inventor: **Rabindranath Dutta**, Austin, TX (US)

Correspondence Address:
Joseph R. Burwell
Law Office of Joseph R. Burwell
P.O. Box 28022
Austin, TX 78755-8022 (US)

(73) Assignee: **International Business Machines Corporation**, Armonk, NY (US)

(21) Appl. No.: **09/740,461**

(22) Filed: **Dec. 18, 2000**

(52) U.S. Cl. **707/526**

(57) **ABSTRACT**

A method, system, apparatus, and computer program product are presented for enabling a user to capture Web content or via a client's Web browser. The captured content is then processed and stored in a customized manner at the server, preferably using user-specifiable scripts. Optional default scripts may also be used. Hyperlinks to the captured content files are conveniently stored in the user's Web page at the server in a manner desired by the user under the control of the server-side scripts. After capturing the content, the user can then access the user's Web page to view the Web page and select the automatically generated hyperlinks. If desired, the user may subsequently edit the Web page to change the hyperlinks, delete hyperlinks, etc. Since the user is able to specify and/or write a script to perform the processing of the pages into which the hyperlinks are placed, the user has

Ex. 1006, Face.

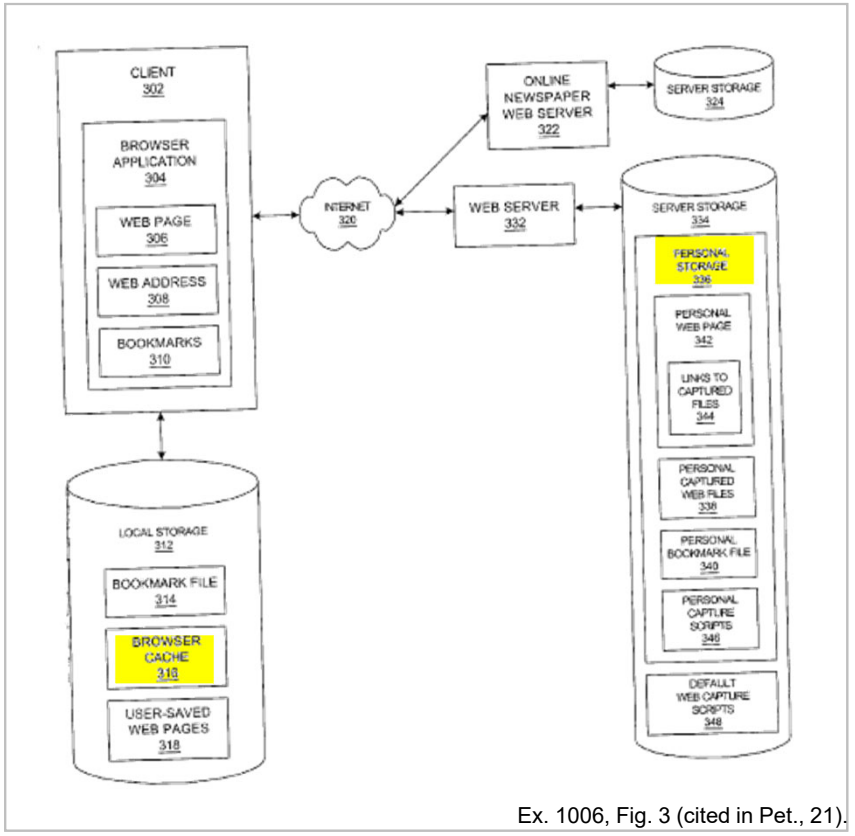

Ex. 1006, Fig. 3 (cited in Pet., 21).

The Obvious Combination of McCown and Dutta

McCown does not explicitly disclose that the URLs identifying files available for download from the remote site ("*information*") are "*cached in [the/a] cache storage in the wireless device,*" but it would have been obvious to include that functionality in the system of McCown in view of Dutta. As demonstrated above, it would have been obvious to include a browser cache in the system of McCown to implement a "*cache storage*" as claimed, based on McCown alone, or McCown in view of Dutta. *See* §VI.A.1.b, *above*; EX1003,¶182.

It would have been further obvious to use that "*cache storage*" to store, within the user site, the URLs identifying files available for download from the remote site. As demonstrated above, a "*cache storage*" is storage that is more

Pet., 40-41.

The Obvious Combination of McCown and Dutta

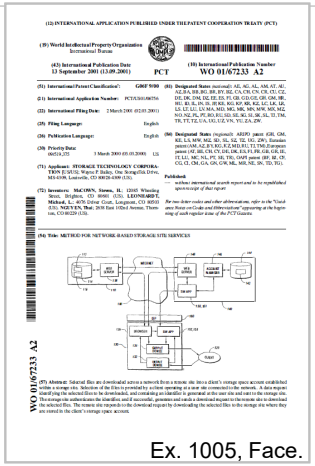

(12) INTERNATIONAL APPLICATION PUBLISHED UNDER THE PATENT COOPERATION TREATY (PCT)

(19) World Intellectual Property Organization International Bureau

(43) International Publication Date 13 September 2001 (13.09.2001)

PCT

(10) International Publication Number WO 01/67233 A2

(51) International Patent Classification[7]: G06F 9/00

(21) International Application Number: PCT/US01/06754

(22) International Filing Date: 2 March 2001 (02.03.2001)

(25) Filing Language: English

(26) Publication Language: English

(30) Priority Data: 60/526,235 3 March 2000 (03.03.2000) US

(71) Applicant: STORAGE TECHNOLOGY CORPORATION [US/US]; Wayne F Bailey, One StorageTek Drive, M/S 4309, Louisville, CO 80028-4309 (US).

(72) Inventors: McCOWN, Steven, H. [US/US]; 12105 Wheeling Street, Brighton, CO 80601 (US). LEONARD T. Michael, L. [US/US]; 4670 Drive Court, Longmont, CO 80503 (US). NGUYEN, Thai [US/US]; 3838 East 102nd Avenue, Thornton, CO 80229 (US).

(74) Title: METHOD FOR NETWORK-BASED STORAGE SITE SERVICES

WO 01/67233 A2

(57) Abstract: Selected files are downloaded across a network from a remote site into a client's storage space account established at the remote site. The client sends a request to the remote site to download the selected files. The request includes a file identifying the selected files to be downloaded, and containing an identifier or password, or the user site and sent to the storage site. The storage site authenticates the identifier, and if successful, generates and sends a download request to the remote site to download the selected files. The remote site responds to the download request by downloading the selected files to the storage site where they are stored in the client's storage space account.

Ex. 1005, Face.

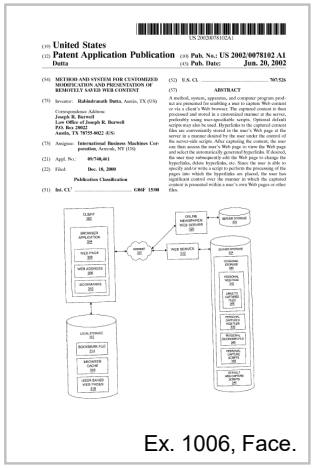

(19) United States

(12) Patent Application Publication

(10) Pub. No.: US 2002/0078102 A1

(43) Pub. Date: Jun. 20, 2002

Dutta

(54) METHOD AND SYSTEM FOR CUSTOMIZED MODIFICATION AND PRESENTATION OF REMOTELY SAVED WEB CONTENT

(75) Inventor: Rabindranath Dutta, Austin, TX (US)

Correspondence Address:
Joseph R. Burwell
Law Office of Joseph R. Burwell
P.O. Box 28022
Austin, TX 78755-8022 (US)

(73) Assignee: International Business Machines Corporation, Armonk, NY (US)

(21) Appl. No.: 09/740,661

(22) Filed: Dec. 18, 2000

Publication Classification

(51) Int. Cl.[7]: G06F 15/00

(52) U.S. Cl.: 707/526

(57) ABSTRACT

Ex. 1006, Face.

- Reasons to Combine
  - Analogous art. Pet. 22.
  - Arrangement of old elements; predictable results. Pet. 22-23.
  - Dutta's techniques were well known in the prior art. Pet., 23.
  - Dutta's caching technique would "provide the user with a faster and more convenient storage for the user site program application data." Pet., 23-24
  - Dutta's allocation technique would "would allow the user site application to access the user site's data more quickly so that it can be transmitted, e.g., to the storage site more quickly without having to make another request to the web server." Pet., 24.

U.S. Patent No. 7,266,555 B1 to Coates et al. ("Coates")

If the operational code in a directory request is for a "move folder" operation, then a database operation is performed to revise the entries in the file and folder tables to reflect the new location of the folder. The "move folder" operation includes, as an argument, the new destination for the folder. Using the example of FIG. **12**, if the "move

If the directory operation is a "move file" operation, then a database operation is performed to revise an entry in the file table to reflect the new location of the file (blocks **1370** and **1375**, FIG. **13**A). The "move file" operation includes a new destination for the file as an argument in the directory request. For the example database tables in FIG. **12**, if the "move file" operation specified moving file "52.MD5" from folder **100** to folder **166**, then the folder ID and folder parent ID fields for the first entry of file table **1220** are revised to "**166**" and "**251**", respectively.

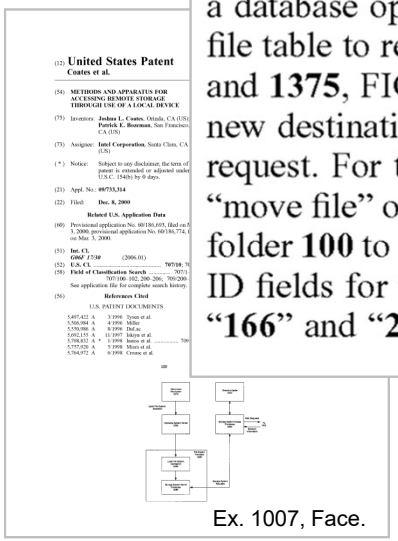
(12) United States Patent
Coates et al.

(54) METHODS AND APPARATUS FOR ACCESSING REMOTE STORAGE THROUGH USE OF A LOCAL DEVICE

(75) Inventors: Joshua L. Coates, Orinda, CA (US); Patrick E. Bozeman, San Francisco, CA (US)

(73) Assignee: Intel Corporation, Santa Clara, CA (US)

(*) Notice: Subject to any disclaimer, the term of patent is extended or adjusted under U.S.C. 154(b) by 0 days.

(21) Appl. No.: 09/733,314

(22) Filed: Dec. 8, 2000

Related U.S. Application Data

(60) Provisional application No. 60/180,693, filed on 3, 2000; provisional application No. 60/186,774, on Mar. 3, 2000.

(51) Int. Cl. G06F 17/30 (2006.01)

(52) U.S. Cl. 707/10; 70

(58) Field of Classification Search 707/1 707/100-102, 200-206; 709/200-

See application file for complete search history.

(56) References Cited

U.S. PATENT DOCUMENTS

5,407,422	A	3/1998	Tyson et al.
5,506,984	A	4/1998	Miller
5,550,980	A	8/1998	DeLac
5,662,155	A	11/1997	Ishiyu et al.
5,708,832	A *	1/1998	Ishiyu et al.
5,757,920	A	5/1998	Misra et al.
5,764,972	A	6/1998	Crouse et al.

Ex. 1007, Face.

FIG. **13**B is a continuation of the flow diagram of FIG. **13**A illustrating additional file system operations in the VFS. If the operational code is a "delete folder" operation, then the corresponding folder entry is deleted from the folder table (blocks **1372** and **1374**, FIG. **13**B). If the operational code designates a "delete file" operation, then the file entry, identified in the operation, is deleted from its file table (blocks **1376** and **1378**, FIG. **13**B). For a "create file" operation, the VFS adds an entry for a new file in the file table (blocks **1386** and **1388**, FIG. **13**B). If the operational code specifies an "update folder" operation, then the client metadata in the corresponding folder table for the folder entry is updated (blocks **1386** and **1388**, FIG. **13**B). For an "update file" operation, the VFS updates client metadata in the table for the corresponding file entry (blocks **1392** and **1394**, FIG. **13**B). After executing the appropriate database operation, the arguments for the operation are returned to the requester (blocks **1396**, FIG. **13**B).

Ex. 1007, columns 15-16 (cited in Pet., 70).

U.S. Patent No. 7,266,555 B1 to Coates et al. ("Coates")

If the operational code i
"move folder" operation, th
formed to revise the entries
reflect the new location of
operation i
the folder.

If the directory operation is a "move file" operation, then a database operation is performed to revise an entry in the file table to reflect the new location of the file (blocks **1370** and **1375**, FIG. **13**A). The "move file" operation includes a

the directory
G. **12**, if the
.MD5" from
folder parent
re revised to

FIG. **13**B is a continuation of the flow diagram of FIG. **13**A illustrating additional file system operations in the VFS. If the operational code is a "delete folder" operation, then the corresponding folder entry is deleted from the folder table (blocks **1372** and **1374**, FIG. **13**B). If the operational code designates a "delete file" operation, then the file entry, identified in the operation, is deleted from its file table (blocks **1376** and **1378**, FIG. **13**B). For a "create file" operation, the VFS adds an entry for a new file in the file table (blocks **1386** and **1388**, FIG. **13**B). If the operational code specifies an "update folder" operation, then the client metadata in the corresponding folder table for the folder entry is updated (blocks **1386** and **1388**, FIG. **13**B). For an "update file" operation, the VFS updates client metadata in the table for the corresponding file entry (blocks **1392** and **1394**, FIG. **13**B). After executing the appropriate database operation, the arguments for the operation are returned to the requester (blocks **1396**, FIG. **13**B).

Ex. 1007, columns 15-16 (cited in Pet., 70).

(12) **United States Patent**
Coates et al.

(10) **Patent No.: US 7,266,555 B1**
(45) **Date of Patent: Sep. 4, 2007**

(54) **METHODS AND APPARATUS FOR ACCESSING REMOTE STORAGE THROUGH USE OF A LOCAL DEVICE**

(75) Inventors: **Joshua L. Coates**, Orinda, CA (US); **Patrick E. Bozeman**, San Francisco, CA (US)

(73) Assignee: **Intel Corporation**, Santa Clara, CA (US)

(*) Notice: Subject to any disclaimer, the term of this patent is extended or adjusted under 35 U.S.C. 154(b) by 0 days.

(21) Appl. No.: **09/733,314**

(22) Filed: **Dec. 8, 2000**

5,796,952 A 8/1998 Davis et al.
5,805,699 A 9/1998 Akiyama et al.
5,870,537 A 2/1999 Kern et al.
5,923,846 A 7/1999 Gage et al.
5,933,834 A 8/1999 Aichelen
5,937,406 A * 8/1999 Balabine et al. 707/100
5,978,577 A 11/1999 Rierden et al.
(Continued)

FOREIGN PATENT DOCUMENTS

EP 0646858 A1 8/1994
(Continued)

OTHER PUBLICATIONS

MOGUL, RFC0917: Internet Subnets, 1984, ACM, pp. 1-17.
(Continued)

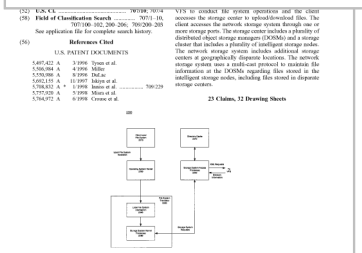

Ex. 1007, Face.

The Obvious Combination of McCown, Dutta, and Coates

It would have been obvious to combine the remote file manipulation techniques of Coates with the combined system of McCown and Dutta. EX1003,¶249.

In such a combination, the remote file manipulation techniques of Coates would be made available to the client of McCown by including program code to implement those manipulation techniques in the user site of McCown. More specifically, in this combination all of the remote file manipulation techniques of Coates would be available to the client of McCown, so that the user could manipulate folders and files in that user's exclusive storage account at the storage site, per the functionality of Coates. EX1003,¶250.

Pet., 66-67.

The Obvious Combination of McCown, Dutta, and Coates

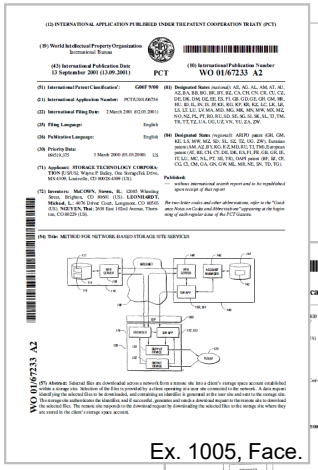

Ex. 1005, Face.

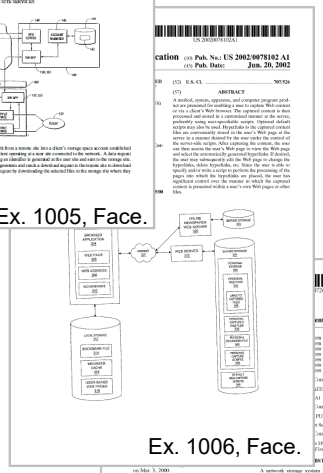

Ex. 1006, Face.

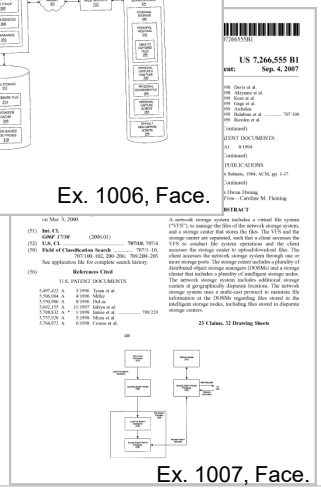

Ex. 1007, Face.

- Reasons to Combine
  - Analogous art. Pet., 67.
  - Arrangement of old elements; predictable results. Pet., 68.
  - Coates' file and folder manipulation techniques provide increased usability to McCown's virtual storage system. Pet., 69.

Roadmap

254 Patent Overview

Prior Art Overview

Patentability Issues

Claim Construction – utilizing download information

Petitioners' Proposed Construction	Patent Owner's Proposed Construction
"using information in the cache storage of the wireless device to stored download a file from a remote server."	"This claim limitation requires information needed to download a file from a remote server to be (i) stored in a cache storage of a wireless device and (ii) utilized to download the file across a network into an assigned storage space for the user of the wireless device.."

Reply, 3-5 (quoting Inst. Dec., 11); POR, 10.

Institution Decision (at 11)

storage in the wireless device" at this time. Prelim. Resp. 10. At this juncture of the proceeding and based on the current record, we adopt Petitioner's construction of "utilizing information for the file cached in the cache storage in the wireless device" to mean "using information stored in the cache storage of the wireless device to download a file from a remote server" to clarify that it is the download information that is stored in cache storage, not the file itself.

Claim Construction – utilizing download information

Petitioners' Proposed Construction	Patent Owner's Proposed Construction
"using information in the cache storage of the wireless device to download a file from a remote server."	"This claim limitation requires information needed to download a file from a remote server to be (i) stored in a cache storage of a wireless devi… acros… spac…

Petitioner's Argument

The main difference between the Board's interpretation and Patent Owner's is that Patent Owner changes the claim phrase "*download information*" to "information **needed** to download a file from a remote server." Those two phrases are not the same thing, as nothing in the words "download information" limits the claim to information "needed" to perform a download (as opposed to information simply "*utiliz[ed]*" to perform such a download), and "information needed to download a file" could include all kinds of information never hinted at in the patent, *e.g.*, checksum information, decryption codes, account numbers. Patent Owner does not attempt to justify switching in its "needed to download" language or explain why its interpretation should be used instead of the Board's. Its interpretation should be rejected.[2]

Reply, 4.

Patent Owner Argument

Petitioners' quibbling with SynKloud's use of the term "needed" in its proposed claim construction (Reply, 4) is meant to detract from the important point that the claimed "download information" is required to download a file from a remote server into the assigned storage space. Indeed, the "download information" is required or needed because it identifies the file that is to be downloaded from the remote server to the assigned storage space. The Specification explicitly states that the download information in the wireless device's cache is, in fact, needed and used to download the file:

> The other software modules (9) of the wireless device (1) send the obtained downloading information to other service modules (7) of the storage server
> …
> the other service module (7) of the storage server (3) sends a web download request to the web-site (15) … based on download information obtained. and receives the downloading data streams from the web server of the web-site (15).

EX1001, 5:16-27.

Sur-Reply, 3.

URLs Come From The Cache, Not The Display

Patent Owner Argument

quoting Pet. 19–20. But as explained by Mr. Jawadi, "the Decision appears to overlook the fact that McCown teaches obtaining the URL(s) (download information) from the wireless device **web page display**, which is s different from and opposite to obtaining the download information wireless device **cache storage**, as recited in the limitations of the in claims of the '254 Patent." EX2003, ¶ 34. Moreover, "Dutta discl

POR, 16

Petitioner's Argument

that functionality in the system of McCown in view of Dutta. As demonstrated above, it would have been obvious to include a browser cache in the system of McCown to implement a "*cache storage*" as claimed, based on McCown alone, or McCown in view of Dutta. *See* §VI.A.1.b, *above*; EX1003,¶182.

It would have been further obvious to use that "*cache storage*" to store, within the user site, the URLs identifying files available for download from the remote site. As demonstrated above, a "*cache storage*" is storage that is more

Pet, 41

Reasons To Combine Need Not Be Found In Combo References

Patent Owner Argument

claims of the '254 Patent." EX2003, ¶ 34. Moreover, "Dutta discloses a generic browser cache. Dutta does not disclose or imply download information, does not disclose or imply any purpose for the Dutta browser cache, and does not disclose or imply storing download information in the Dutta browser cache." *Id.* at ¶ 37.

POR, 16

Petitioner's Argument

This argument also ignores the analysis in the petition. As the petition demonstrated, it was known that browser caches, such as that of Dutta, were used to store web pages for faster retrieval. *See* Pet., 42-43, citing EX1010, ¶[0002] ("Caching is a process that web browsers typically use that provides for faster retrieval of web page content"); EX1011, 1:66-2:1 ("it is common practice for contemporary Web browsers to cache pages accessed by the user"); *see also* EX1006, ¶[0029]. Thus, a Skilled Artisan would have understood that the purpose of Dutta's browser cache was to cache web pages, such as the web page of URLs disclosed in McCown. The petition was not required to show that Dutta *itself* stated as much or provided a reason to use the cache in the system of McCown for that purpose, as ample evidence of those facts from other sources was identified in the petition. *See* Pet., 19-24, 40-44.

Reply, 6.

McCown Users Can Select One or More URLs

Patent Owner Argument

Rather, "McCown retrieves the download information all at once and sends it to the storage server to use for downloading, which negates the nee purported subsequent retrieval of the download information at the wi In other words, there is no need or reason to store the download infor wireless device (whether in cache or elsewhere), since there is no sub or reason to retrieve the download information from cache (or elsewh

POR, 26-27

Petitioner's Argument

The assertion that "McCown retrieves the download information all at once ***and sends it*** to the storage server to use for downloading," is misleading. McCown discloses retrieving the download information (a web page of URLs) into the user site and then, after the user selects at least some of the URLs listed on the page, sending ***the selected URLs*** to the storage server to initiate download of the ose URLs. EX1005, 11:17-20. While a user could certainly

Reply, 13.

In the preferred embodiment, the client 120 selects one file 112 at a time by moving a cursor over the desired file 112 using a mouse, as shown in block 300. The client 120 then presses a right button on the mouse causing a pop-up window to appear on the display adjacent to the cursor. From the pop-up window, the client 120 selects a command titled "Save to Soft-Drive" with a left button on the mouse, as shown in block 304. User site software application 152 is operational to accept the URL of the selected file 112 from the browser 136 through the operating system.

EX1005, 11:12-20 (cited in Reply, 13).

Obvious To Cache URLs for Subsequent Retrieval

Patent Owner Argument

of McCown itself. As explained by Mr. Jawadi, the universal resource locators (URLs) in McCown "are used only once by the user (negating the need to store the URLs in cache)," and thus, there would not have been any motivation to store the URLs "at the wireless device (whether in ca otherwise)." *Id.* at ¶ 42. As further explained by Mr. Jawadi, "the f

POR, 16-17

Petitioner's Argument

Patent Owner's conclusion does not flow from its premise. Just because McCown may disclose the user accessing the URL's only once does not mean that it would have been non-obvious to access them more than once. Nor is it required that McCown *itself* provide a reason why a user might access the list of URLs a second time. Any need or problem in the field and addressed by the patent can provide such a reason. *KSR*, 127 S.Ct. at 1742. Indeed, an obviousness analysis

Reply, 7-8.

Obvious To Cache URLs for Subsequent Retrieval

Petitioner's Argument

11:12-23. A Skilled Artisan would have been motivated to store those URLs in storage that is more readily accessible by the user or user application, or "*cache storage*," of the combined system of McCown and Dutta, so that those URLs could be quickly retrieved and used to generate the data request of McCown. EX1003,¶183.

Indeed, for the same reasons, it would have been obvious to maintain the URLs in such a "*cache storage*," at least for some period of time, in case the user re-opened the webpage listing the URLs for purposes of making another selection.

Pet., 41.

Here, there is nothing in McCown that would preclude a user from accessing the web page of URLs more than once, and the prior art cited in the Petition discloses that browser caches are used precisely because a user might access the same web page more than once. EX1010,¶¶[0002]-[0003]; EX1011, 1:66-2:9; EX1030, 72; EX1008, 114. Further, it is simply common sense that such multiple accesses could happen in a system such as McCown's. People change their minds, or forget what they meant to do. A user, after downloading one or more files using McCown's system, may later choose to download another, or later remember that she meant to download others. That McCown does not explicitly disclose a user doing so is beside the point. A Skilled Artisan would have understood that some users would seek to access that web page of URLs more than once, and therefore be motivated to cache it and thereby improve the efficiency of the system. EX1003,¶184. That is the very purpose of a cache. EX1010, ¶[0002].

Reply, 8.

Petition Identified Combo With Particularity

Patent Owner Argument

Here, Petitioners have done exactly that which the Board has found to be insufficient to meet their burden: they have presented mere attorney argument and conclusory statements from their expert to support their position that the limitations that are wholly absent from the prior art would have been obvious.

POR, 18

Petitioner's Argument

As demonstrated there, McCown discloses the "*download information*" (a webpage of URLs) received by the user site, Pet., 39-40, citing EX1005, 10:18-27, which would necessarily mean it is stored at the user site in some manner. McCown further states that "the functionality of the user site software application ***may be implemented as part of a browser***," EX1005, 9:22-23; Pet., 19. Dutta discloses a browser cache, Pet., 20, citing EX1006, ¶[0029], which a Skilled Artisan would understand to be a storage device for caching (*i.e.*, storing) web pages, Pet., 41-43, citing EX1010, ¶[0002]; EX1011, 1:66-2:1; EX1003, ¶¶182-

Reply, 9.

Institution Decision (at 17)

Fig. 1; Ex. 1010 ¶ 2; Ex. 1011, 1:66–2:1). Moreover, we disagree that Dutta does not teach storing download information in cache storage. Dutta explicitly describes a "browser cache." Ex. 1006 ¶ 29. Patent Owner does

Combo Required No Major Architectural Changes

Patent Owner Argument

As explained by Mr. Jawadi, "a POSITA would have understood that combining McCown and Dutta would have required major architectural changes in McCown and Dutta." EX2003, ¶ 46. "For example, McCown requires software on the client wireless device to emulate a hard disk drive that is actually located on a storage server (e.g., McCown at 9:14-18, 15:27-16:4) and requires the software to communicate with the web browser to support the operations of drag-and-drop and copy-and-paste. However, in the purported combined system of McCown and Dutta, all these functions would need to be modified and adapted." *Id.* at ¶ 47. The

POR, 24

Petitioner's Argument

But the expert never explains why merely adding a browser cache to McCown and storing a web page in it would require that functionality to be changed in such a substantial way as to discourage a Skilled Artisan from making the combination. Nor does the expert explain what specific changes would need to be made—such *ipse dixit* expert testimony is entitled to no weight. *See Ericsson*, 890 F.3d 1346; 37 C.F.R. §42.65(a).

Reply, 11.

Combo Required No Major Architectural Changes

Patent Owner Argument

As explained by Mr. Jawadi, "a POSITA would have understood that combining McCown and Dutta would have required major architectural changes in McCown and Dutta." EX2003, ¶ 46. "For example, McCown requires software on the client wireless device to emulate a hard disk drive that is actually located on a storage server (e.g., McCown at 9:14-18, 15:27-16:4) and requires the software to communicate with the web browser to support the operations of drag-and-drop and copy-and-paste. However, in the purported combined system of McCown and Dutta, all these functions would need to be modified and adapted." *Id.* at ¶ 47. The

POR, 24

Petitioner's Argument

McCown discloses the use of "[a] browser" such as "Internet Explorer" from Microsoft Corporation and "Netscape Communicator" from Netscape Communications Corporation. EX1005, 8:5-10. As Dr. Houh explains, EX1003,¶127, each of these browsers would have been understood to have included "*at least one cache storage for caching data received from the Internet.*" EX1024, 7:8-10 ("Both Netscape Navigator and Microsoft Internet Explorer have cache memories where HTML, GIFs, MP3, etc. files are cached in a hard disk directory); EX1025, 3:3-8 ("[T]he Netscape Communicator browser application caches web pages on the client. Each cached web page is associated with a URL. Thus, when the client requests a web page, the Netscape Communicator browser attempts to use previously cached web pages before downloading the pages from the web site").

Pet., 18.

Combo Required No Major Architectural Changes

Patent Owner Argument

As explained by Mr. Jawadi, "a POSITA would have understood that combining McCown and Dutta would have required major architectural changes in McCown and Dutta." EX2003, ¶ 46. "For example, McCown requires software on the client wireless device to emulate a hard disk drive that is actually located on a storage server (e.g., McCown at 9:14-18, 15:27-16:4) and requires the software to communicate with the web browser to support the operations of drag-and-drop and copy-and-paste. However, in the purported combined system of McCown and Dutta, all these functions would need to be modified and adapted." *Id.* at ¶ 47. The

POR, 24

Petitioner's Argument

(12) **United States Patent**
Coates et al.

(10) **Patent No.: US 7,266,555 B1**
(45) **Date of Patent: Sep. 4, 2007**

(54) **METHODS AND APPARATUS FOR ACCESSING REMOTE STORAGE THROUGH USE OF A LOCAL DEVICE**

(75) Inventors: **Joshua L. Coates**, Orinda, CA (US); **Patrick E. Bozeman**, San Francisco, CA (US)

5,796,952	A	8/1998	Davis et al.	
5,805,699	A	9/1998	Akiyama et al.	
5,870,537	A	2/1999	Kern et al.	
5,923,846	A	7/1999	Gage et al.	
5,933,834	A	8/1999	Aichelen	
5,937,406	A *	8/1999	Balabine et al.	707/100
5,978,577	A	11/1999	Rierden et al.	

(73)
(*
(21)
(22)

As shown in FIG. **6**, the DOSM also includes a data cache **620**. In general, the data cache **620** stores objects (i.e., client data) to permit the DOSM to streamline data directly to the recipient in response to a download request. During a download request, in the event of a cache miss, when the object is transferred from the intelligent storage node to the recipient, the object is also stored in the data cache **620**. Similar to the DOSM file lookup table, the data cache **620**

EX1007, 10:60-66 (cited in Reply, 12)

Combo Required No Major Architectural Changes

Patent Owner Argument

As explained by Mr. Jawadi, "a POSITA would have understood that combining McCown and Dutta would have required major architectural changes in McCown and Dutta." EX2003, ¶ 46. "For example, McCown requires software on the client wireless device to emulate a hard disk drive that is actually located on a storage server (e.g., McCown at 9:14-18, 15:27-16:4) and requires the software to communicate with the web browser to support the operations of drag-and-drop and copy-and-paste. However, in the purported combined system of McCown and Dutta, all these functions would need to be modified and adapted." *Id.* at ¶ 47. The

POR, 24

Petitioner's Argument

quick access to data). The combination could therefore have been readily made without undue experimentation.

138. The use of a browser cache was well-known in the prior art. EX1010, ¶[0002] ("Caching is a process that web browsers typically use that provides for faster retrieval of web page content"); EX1011, 1:66-2:1 ("it is common practice for contemporary web browsers to cache pages accessed by the user"). A Skilled Artisan could therefore have readily made this combination without undue effort or experimentation. *See, e.g.,* EX1012, 14:30-33 ("a mobile device that is used primarily for messaging may include a relatively large message store and a smaller browser cache, whereas a mobile device that is used primarily for browsing may contain a larger browser cache and smaller message store").

EX1003, ¶¶137-138 (cited in Reply, 12)

No Hindsight or Conclusory Arguments

Patent Owner Argument

with Dutta. Petition, p. 16. But the Petition's motivation to combine is rooted in forbidden hindsight analysis that is based on its incorrect assumption regarding the level of ordinary skill in the art. The Petitioners failed to provide

* * *

Petitioners make only conclusory arguments that "it would have been obvious to include a browser cache in the system of McCown to implement a 'cache storage' as claimed, based on McCown alone, or McCown in view of Dutta." Petition, 40-41, 60-61. In particular, Petitioners advance several

POR, 37-38

Petitioner's Argument

Dr. Henry Houh

TES PATENT AND TRADEMARK OFFICE

E PATENT TRIAL AND APPEAL BOARD

OSOFT CORPORATION and HP INC.
Petitioners,

v.

NKLOUD TECHNOLOGIES, LLC,
Patent Owner.

Patent No. 10,015,254
Issued: July 3, 2018
Filed: December 21, 2015

Inventor: Sheng Tai Tsao

Title: SYSTEM AND METHOD FOR WIRELESS DEVICE ACCESS TO

DECLARATION OF HENRY HOUH REGARDING U.S. PATENT NO. 10,015,254

Petitioners Microsoft Corporation and HP Inc. – Ex. 1003, Cover

EX1003, ¶¶132-140

EX1006

EX1010

EX1011

EX1012

EX1013

(Cited in Pet., 20-24.)

No Secondary Considerations – Patent Owner's Burden

Patent Owner bears the burden "to show both commercial success and that a nexus exists between that success and the merits of the claimed invention." *Transocean Offshore Deepwater v. Maersk Drilling*, 699 F.3d 1340, 1350 (Fed. Cir. 2012). Moreover, "[i]f commercial success is due to an element in the prior art, no nexus exists." *Tokai Corp. v. Easton Enters., Inc.*, 632 F.3d 1358, 1369 (Fed. Cir. 2011).

Reply, 22

No Secondary Considerations – No Presumed Nexus

a. A response to the petition (37 C.F.R. § 42.120). If Patent Owner elects not to file a response, Patent Owner must arrange a conference call with the parties and the Board. Patent Owner is cautioned that any arguments not raised in the response may be deemed waived.

Paper 17, Scheduling Order, 8

[6] Patent Owner does not attempt to show that the cited devices are "coextensive" with any claim of the 254 Patent. *Fox Factory, Inc. v. SRAM*, LLC, 944 F.3d 1366, 1373 (Fed. Cir. 2019). Nor could it, as those devices include multiple components never mentioned in any claim of the 254 patent, including operating systems, processors, displays, and cameras. EX1037, 1-2; EX1038, 1-5; *see generally*, EX1039; EX1040. Patent Owner is therefore not entitled to a presumption of nexus.

Reply, 22

No Secondary Considerations – No Presumed Nexus

As WBIP correctly argues, there is a presumption of nexus for objective considerations when the patentee shows that the asserted objective evidence is tied to a specific product and that product "is the invention disclosed and claimed in the patent."[3] *J.T. Eaton & Co. v. Atl. Paste & Glue Co.*, 106 F.3d 1563, 1571 (Fed. Cir. 1997) (quoting *Demaco Corp. v. F. Von Langsdorff Licensing Ltd.*, 851 F.2d 1387, 1392 (Fed. Cir. 1988); *Crocs, Inc. v. Int'l Trade Comm'n,* 598 F.3d 1294, 1310-11 (Fed. Cir. 2010); *Brown & Williamson Tobacco Corp. v. Philip Morris, Inc.*, 229 F.3d 1120, 1130 (Fed. Cir. 2000); *Demaco*,851 F.2d at 1392-93.

WBIP, LLC v. Kohler Co., 829 F. 3d 1317, 1329 (Fed.Cir. 2016) (cited in Sur-Reply, 20).

As first recognized in *Demaco Corp. v. F. Von Langsdorff Licensing Ltd.*, a patentee is entitled to a rebuttable presumption of nexus between the asserted evidence of secondary considerations and a patent claim if the patentee shows that the asserted evidence is tied to a specific product and that the product "***is*** the invention disclosed and claimed." 851 F.2d at 1392 (emphasis added). That is, presuming nexus is appropriate "when the patentee shows that the asserted objective evidence is tied to a specific product and that product `embodies the claimed features, and is coextensive with them.'" *Polaris Indus., Inc. v. Arctic Cat, Inc.*, 882 F.3d 1056, 1072 (Fed. Cir. 2018) (quoting *Brown & Williamson Tobacco Corp. v. Philip Morris Inc.*, 229 F.3d 1120, 1130 (Fed. Cir. 2000)). Conversely, "[w]hen the thing that is commercially successful is not coextensive with the patented invention—for example, if the patented invention is only a component of a commercially successful machine or process," the patentee is not entitled to a presumption of nexus. *Demaco*, 851 F.2d at 1392.

Fox Factory, Inc. v. SRAM, LLC, 944 F. 3d 1366, 1373 (Fed.Cir. 2019) (cited in Reply, 22).

No Secondary Considerations – WRONG Nexus

Patent Owner Argument

The strong nexus between the claimed invention of the '254 Patent and wireless devices with Microsoft OneDrive is confirmed by the additional claim charts below:

POR, 50.

Petitioner's Argument

invention, on the other. POR, 50, 71, 72, 75. But a nexus between *a commercial device* and the claim is not relevant to the obviousness analysis. The law required Patent Owner "to show both commercial success and that a nexus exists **between that success and the merits of the claimed invention.**" *Transocean*, 699 F.3d at 1350. Patent Owner has not attempted to make that showing.

Reply, 22-23.

No Secondary Considerations – Cited Devices Do Not Practice Claims

Patent Owner Argument

1E	the storing data comprising to download a file from a second server across a network into the remote storage space through utilizing information for the file cached in the cache storage in the wireless device.	The storing of a data object includes downloading a file from a remote server into the user's assigned storage space of OneDrive by using download information for the file cached in the cache storage of Microsoft wireless device, e.g. Surface Pro., in response to the user performing the operation of downloading the file. 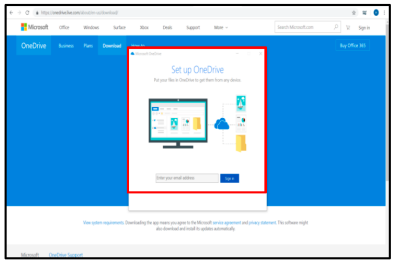

EX2016, 6 (cited in POR, 56).

Petitioner's Argument

Nor has Patent Owner provided any evidence that the cited devices actually practice any claimed invention of the 254 Patent. For example, each independent claim requires the "*download information*" be stored in the cache. EX1001, 6:5-14, 7:1-10. The claim charts Patent Owner cites do not say anything about where the supposed download information of those systems is stored. EX2004, 7-25; EX2005, 21-32; EX2006, 18-24; EX2007, 7-20; EX2008, 6-10; EX2016, 6-19; EX2021, 5-6. Nor does Patent Owner submit or analyze any source code for those devices.

Reply, 23

No Secondary Considerations – Cited Devices Do Not Practice Claims

Patent Owner Argument

1E	the storing data comprising to download a file from a second server across a network into the remote storage space through utilizing information for the file cached in the cache storage in the wireless device.	The storing of a data object includes downloading a file remote server into the user's assigned storage space o OneDrive by using download information for the file ca the cache storage of Microsoft wireless device, e.g. Pro., in response to the user performing the operation downloading the file. 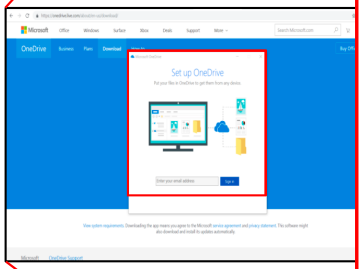

EX2016, 6 (cited in POR, 56).

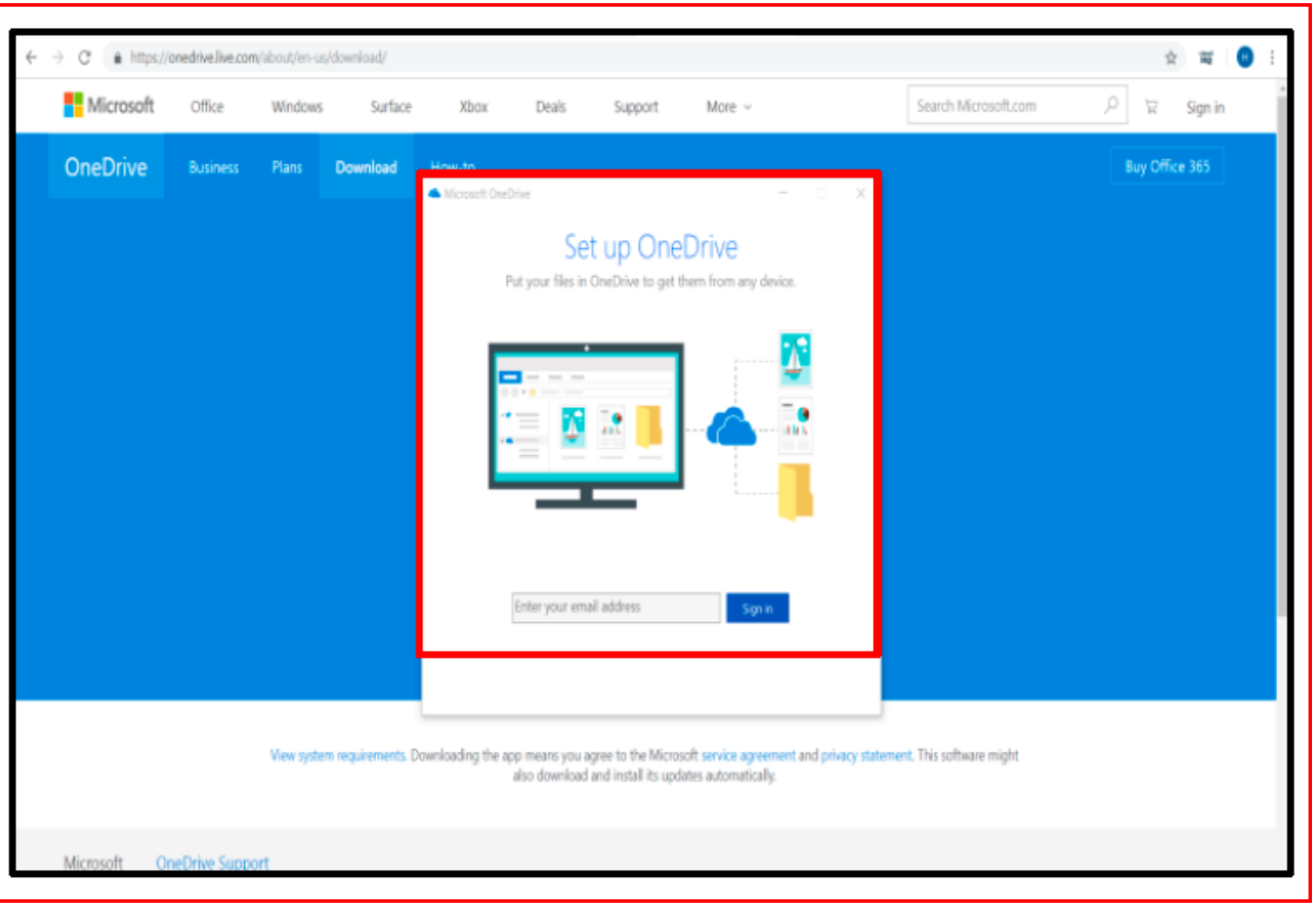

No Secondary Considerations – Any Success Attributable to Prior Art Cloud Storage Techniques

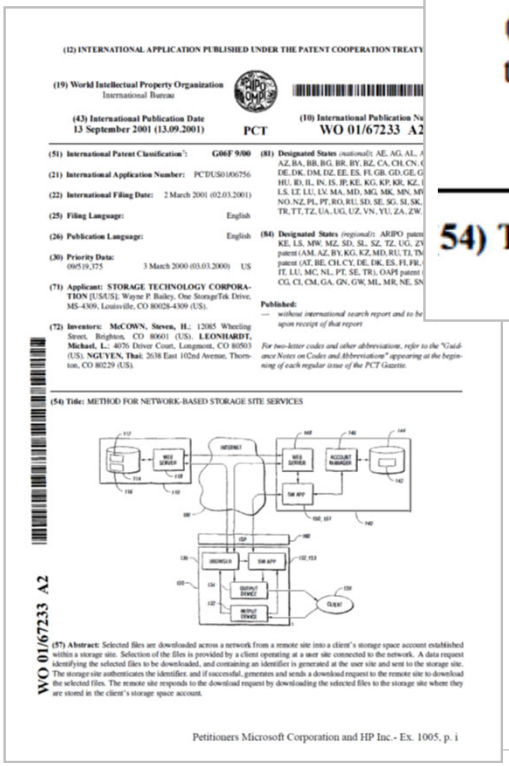

(12) INTERNATIONAL APPLICATION PUBLISHED UNDER THE PATENT COOPERATION TREATY

(19) World Intellectual Property Organization
International Bureau

(43) International Publication Date
13 September 2001 (13.09.2001)

PCT

(10) International Publication No.
WO 01/67233 A2

(51) International Patent Classification⁷: G06F 9/00

(21) International Application Number: PCT/US01/06756

(22) International Filing Date: 2 March 2001 (02.03.2001)

(25) Filing Language: English

(26) Publication Language: English

(30) Priority Data:
09/519,375 3 March 2000 (03.03.2000) US

(71) Applicant: STORAGE TECHNOLOGY CORPORATION [US/US]; Wayne P. Bailey, One StorageTek Drive, MS-4309, Louisville, CO 80028-4309 (US).

(72) Inventors: McCOWN, Steven, H.; 12085 Wheeling Street, Brighton, CO 80601 (US). LEONHARDT, Michael, L.; 4076 Driver Court, Longmont, CO 80503 (US). NGUYEN, Thai; 2638 East 102nd Avenue, Thornton, CO 80229 (US).

(81) Designated States (national): AE, AG, AL, AZ, BA, BB, BG, BR, BY, BZ, CA, CH, CN, DE, DK, DM, DZ, EE, ES, FI, GB, GD, GE, HU, ID, IL, IN, IS, JP, KE, KG, KP, KR, KZ, LS, LT, LU, LV, MA, MD, MG, MK, MN, NO, NZ, PL, PT, RO, RU, SD, SE, SG, SI, SK, TR, TT, TZ, UA, UG, UZ, VN, YU, ZA, ZW.

(84) Designated States (regional): ARIPO patent (KE, LS, MW, MZ, SD, SL, SZ, TZ, UG, ZW), patent (AM, AZ, BY, KG, KZ, MD, RU, TJ, TM), patent (AT, BE, CH, CY, DE, DK, ES, FI, FR, IT, LU, MC, NL, PT, SE, TR), OAPI patent (BF, CG, CI, CM, GA, GN, GW, ML, MR, NE, SN).

Published:
— without international search report and to be republished upon receipt of that report

For two-letter codes and other abbreviations, refer to the "Guidance Notes on Codes and Abbreviations" appearing at the beginning of each regular issue of the PCT Gazette.

(54) Title: METHOD FOR NETWORK-BASED STORAGE SITE SERVICES

(57) Abstract: Selected files are downloaded across a network from a remote site into a client's storage space account established within a storage site. Selection of the files is provided by a client operating at a user site connected to the network. A data request identifying the selected files to be downloaded, and containing an identifier is generated at the user site and sent to the storage site. The storage site authenticates the identifier, and if successful, generates and sends a download request to the remote site to download the selected files. The remote site responds to the download request by downloading the selected files to the storage site where they are stored in the client's storage space account.

WO 01/67233 A2

Petitioners Microsoft Corporation and HP Inc.- Ex. 1005, p. i

72) **Inventors:** **McCOWN, Steven, H.**; 12085 Wheeling Street, Brighton, CO 80601 (US). **LEONHARDT, Michael, L.**: 4076 Driver Court, Longmont, CO 80503 (US). **NGUYEN, Thai**; 2638 East 102nd Avenue, Thornton, CO 80229 (US).

upon rec

For two-letter ance Notes on ning of each r

54) **Title:** METHOD FOR NETWORK-BASED STORAGE SITE SERVICES

Ex. 1005, Face (Pet., 13-14)

(57) Abstract: Selected files are downloaded across a network from a remote site into a client's storage space account established within a storage site. Selection of the files is provided by a client operating at a user site connected to the network. A data request identifying the selected files to be downloaded, and containing an identifier is generated at the user site and sent to the storage site. The storage site authenticates the identifier, and if successful, generates and sends a download request to the remote site to download the selected files. The remote site responds to the download request by downloading the selected files to the storage site where they are stored in the client's storage space account.

Ex. 1005, Abstract (cited in Petition, 22)

No Secondary Considerations – Licensing

Indeed, the license covers various patents, and while Patent Owner baldly characterizes them as "related," POR, 76, many bear no relationship to the 254 Patent whatsoever. *See* EX2030, Exhibit A. Patent Owner does not even attempt to show that the license w

Merck & Cie v. Gnosis S.

Patent Owner also seems to assert that the products of its licensee practice the claims of the 254 Patent, POR, 75, citing a claim chart submitted as EX2029. But that exhibit says nothing about whether those products actually store "*download information*" in a cache, so there is no evidence that the licensee practices the invention of the 254 Patent, and Patent Owner has failed to carry its burden to show the license resulted from the non-prior a

for this reason as well.

Indeed, Patent Owner appears to misunderstand the use of licensing in the obviousness analysis. The relevant secondary consideration of non-obviousness is licensing **showing industry respect for the invention**. *In re Rouffet*, 149 F.3d 1350, 1355 (Fed. Cir. 1998). The license to a single member of the industry for a relatively small amount of money does not show industry respect for the invention. *Stratoflex, Inc. v. Aeroquip Corp.*, 713 F.2d 1530, 1539 (Fed. Cir. 1983).

Reply, 24

Beijing

Boston

Brussels

Century City

Chicago

Dallas

Geneva

Hong Kong

Houston

London

Los Angeles

Munich

New York

Palo Alto

San Francisco

Shanghai

Singapore

Sydney

Tokyo

Washington, D.C.

CERTIFICATE OF SERVICE

Pursuant to 37 C.F.R. § 42.6(e), I hereby certify that on this 26th day of August, 2021, I caused to be served a true and correct copy of the foregoing on the following counsel:

Dr. Gregory J. Gonsalves - gonsalves@capitoliplaw.com
Yeasun Yoon - yoon@capitoliplaw.com

Dated: August 26, 2021

Respectfully Submitted,

/Scott M. Border/
Scott M. Border
Reg. No. 77,744
sborder@sidley.com
Sidley Austin LLP
1501 K Street, N.W.
Washington, D.C. 20005
(202) 736-8818
Attorney for Petitioners