same or substantially the same prior art" previously was "presented to the Office" in the IPR '892 proceeding. 35 U.S.C. § 325(d); *see also Unilever, Inc., v. The Proctor & Gamble Co.*, Case IPR2014-00506, slip op. at 6 (PTAB July 7, 2014) (Paper 17) (informative) (seven new references added to six that were applied in earlier petition).

Petitioner is requesting, essentially, a second chance to challenge the claims. We, however, are not persuaded that a second chance would help "secure the just, speedy, and inexpensive resolution of every proceeding." 37 C.F.R. § 42.1(b). Permitting second chances in cases like this one ties up the Board's limited resources; we must be mindful not only of this proceeding, but of "every proceeding." *Id.*; *see also ZTE Corp. v. ContentGuard Holdings, Inc.*, Case IPR2013-00454, slip op. at 5–6 (PTAB Sept. 25, 2013) (Paper 12) ("The Board is concerned about encouraging, unnecessarily, the filing of petitions which are partially inadequate."); *cf. Ariosa Diagnostics v. Isis Innovation, Ltd.*, Case IPR2013-00250, slip op. at 2, 4 (PTAB Sept. 8, 2013) (Paper 25) (granting joinder when a new product was launched, leading to a threat of new assertions of infringement) *and* Paper 4 at 3; *Microsoft Corp. v. Proxyconn, Inc.*, Case IPR2013-00109, slip op. at 3 (PTAB Feb. 25, 2014) (Paper 15) (granting joinder when additional claims had been asserted against petitioner in concurrent district court litigation).

In this proceeding, however, we are not apprised of a reason that merits a second chance. Petitioner simply presents arguments now that it could have made in IPR '892, had it merely chosen to do so. In view of the foregoing, and especially in light of the fact that, barring joinder, this petition is time-barred under 35 U.S.C. § 315(b), we exercise our discretion

Rembrandt Wireless
Ex. 2012
Apple Inc. v. Rembrandt Wireless Technologies, LP, IPR2020-00033
Page 505

Apple Exhibit 1010
IPR2020-00036 Page 00505
310

under 35 U.S.C. § 325(d) to deny the petition, because it presents merely "the same or substantially the same prior art or arguments" presented to us in IPR '892. As a consequence, Petitioner's motion for joinder is dismissed as moot.

III. ORDER

In view of the foregoing, it is

ORDERED that Petitioner's motion for joinder is *dismissed*; and

FURTHER ORDERED that no trial is instituted.

Rembrandt Wireless
Ex. 2012
Apple Inc. v. Rembrandt Wireless Technologies, LP, IPR2020-00033
Page 506

PETITIONER:
J. Steven Baughman
Gabrielle E. Higgins
Daniel Cardy
ROPES & GRAY LLP
steven.baughman@ropesgray.com
gabrielle.higgins@ropesgray.com
cardyd@dicksteinshapiro.com

PATENT OWNER

Thomas Engellenner
Reza Mollaaghababa
George Haight
Lana Gladstein
PEPPER HAMILTON LLP
engellennert@pepperlaw.com
mollaaghababar@pepperlaw.com
haightg@pepperlaw.com
gladsteinl@pepperlaw.com

Trials@uspto.gov
571-272-7822

Paper 44
Date Entered: September 24, 2015

UNITED STATES PATENT AND TRADEMARK OFFICE

BEFORE THE PATENT TRIAL AND APPEAL BOARD

SAMSUNG ELECTRONICS CO. LTD., SAMSUNG ELECTRONICS AMERICA, INC., SAMSUNG TELECOMMUNICATIONS AMERICA, LLC, and SAMSUNG AUSTIN SEMICONDUCTOR, LLC,
Petitioner,

v.

REMBRANDT WIRELESS TECHNOLOGIES, LP,
Patent Owner.

Case IPR2014-00893
Patent 8,457,228 B2

Before JAMESON LEE, HOWARD B. BLANKENSHIP, and JUSTIN BUSCH, *Administrative Patent Judges.*

BLANKENSHIP, *Administrative Patent Judge.*

FINAL WRITTEN DECISION
35 U.S.C. § 318(a) and 37 C.F.R. § 42.73

I. BACKGROUND

Samsung Electronics Co. Ltd., Samsung Electronics America, Inc., Samsung Telecommunications America, LLC, and Samsung Austin Semiconductor, LLC (collectively, "Petitioner") filed a request for *inter*

partes review of claims 22, 23, and 25 of U.S. Patent No. 8,457,228 B2 ("the '228 patent," Ex. 1401) under 35 U.S.C. §§ 311–319. Paper 2 (Petition or "Pet."). The Board instituted an *inter partes* review of claims 22, 23, and 25 on an asserted ground of unpatentability for obviousness. Paper 8 ("Dec. on Inst.").

Subsequent to institution, Patent Owner Rembrandt Wireless Technologies, LP, filed a patent owner response (Paper 17, "PO Resp."). Petitioner filed a reply to the Patent Owner Response (Paper 27, "Pet. Reply").

Oral hearing was held on July 21, 2015.[1]

The Board has jurisdiction under 35 U.S.C. § 6(c). This final written decision is issued pursuant to 35 U.S.C. § 318(a) and 37 C.F.R. § 42.73.

For the reasons that follow, we determine that Petitioner has shown by a preponderance of the evidence that claims 22, 23, and 25 of the '228 patent are unpatentable.

A. Related Proceedings

According to Petitioner, the '228 patent is involved in the following lawsuit: *Rembrandt Wireless Technologies, LP v. Samsung Electronics Co.*, No. 2:13-cv-00213 (E.D. Tex. 2013). Pet. 1. The '228 patent also has been challenged in the following cases: *Samsung Electronics Co. v. Rembrandt Wireless Technologies, LP*, IPR2014-00889 (not instituted); *Samsung Electronics Co. v. Rembrandt Wireless Technologies, LP*, IPR2014-00890 (not instituted); *Samsung Electronics Co. v. Rembrandt Wireless Technologies, LP*, IPR2014-00891 (not instituted); *Samsung Electronics Co.*

[1] The record includes a transcript of the oral hearing. Paper 43.

v. Rembrandt Wireless Technologies, LP , IPR2014-00892 (final decision being issued concurrently); and *Samsung Electronics Co. v. Rembrandt Wireless Technologies, LP*, IPR2014-00895 (final decision being issued concurrently).

B. The '228 Patent

The '228 Patent issued from an application filed August 4, 2011, which claimed priority under 35 U.S.C. § 120 through a chain of intervening applications to an application filed December 4, 1998, and which further claimed priority under 35 U.S.C. § 119 to a provisional application filed December 5, 1997.

The technical field of the patent relates to data communications and modulators/demodulators (modems), and in particular to a data communications system in which a plurality of modems use different types of modulation in a network. Ex. 1401, col. 1, ll. 21–25; col. 1, l. 58 – col. 2, l. 23.

C. Illustrative Claim

Of the challenged claims, only claim 22 is independent.

> 22. A communication device configured to communicate according to a master/slave relationship in which a slave communication from a slave to a master occurs in response to a master communication from the master to the slave, the device comprising:
>
> a transceiver in the role of the master according to the master/slave relationship that is configured to send at least a plurality of communications, wherein each communication from among said plurality of communications comprises at least a respective first portion and a respective payload portion,

Rembrandt Wireless
Ex. 2012
Apple Inc. v. Rembrandt Wireless Technologies, LP, IPR2020-00033
Page 510
IPR2020-00036 Page 00510
315

wherein each communication from among said plurality of communications is addressed for an intended destination of the respective payload portion of that communication, and wherein for each communication from among said plurality of communications:

said respective first portion is modulated according to a first modulation method from among at least two types of modulation methods, wherein the at least two types of modulation methods comprise the first modulation method and a second modulation method, wherein the second modulation method is of a different type than the first modulation method,

said respective first portion comprises an indication of which of the first modulation method and the second modulation method is used for modulating respective payload data in the respective payload portion, and

the payload data is modulated according to at least one of the first modulation method or the second modulation method in accordance with what is indicated by the respective first portion;

the transceiver further configured to send at least a first communication of the plurality of communications such that payload data included in a payload portion of the first communication is modulated according to the second modulation method based on a first portion of the first communication indicating that the second modulation method will be used for modulating the payload data in the payload portion of the first communication, wherein the payload data is included in the first communication after the first portion of the first communication;

the transceiver further configured to send at least a second communication of the plurality of communications such that payload data included in a payload portion of the second communication is modulated according to the first modulation method based on a first portion of the second communication indicating that the first modulation method will be used for modulating the payload data in the payload portion of the second communication.

Rembrandt Wireless
Ex. 2012
Apple Inc. v. Rembrandt Wireless Technologies, LP, IPR2020-00033
Page 511
IPR2020-00036 Page 00511
316

D. Prior Art

Boer	US 5,706,428	Jan. 6, 1998	(Ex. 1404)

E. Asserted Ground of Unpatentability

The Board instituted *inter partes* review on the following asserted ground of unpatentability under 35 U.S.C. § 103(a) (Dec. on Inst. 14): claims 22, 23, and 25 of the '228 patent on the ground of obviousness over Admitted Prior Art ("APA") and Boer.

II. ANALYSIS

A. Claim Interpretation

In an *inter partes* review, the Board construes claim terms in an unexpired patent using their broadest reasonable construction in light of the specification of the patent in which they appear. 37 C.F.R. § 42.100(b); *In re Cuozzo Speed Techs., LLC*, 793 F.3d 1268, 1275–79 (Fed. Cir. 2015). The claim language should be read in light of the specification as it would be interpreted by one of ordinary skill in the art. *In re Am. Acad. of Sci. Tech. Ctr.*, 367 F.3d 1359, 1364 (Fed. Cir. 2004). The Office must apply the broadest reasonable meaning to the claim language, taking into account any definitions presented in the specification. *Id.* (citing *In re Bass*, 314 F.3d 575, 577 (Fed. Cir. 2002)). The "ordinary and customary meaning" is that which the term would have to a person of ordinary skill in the art in question. *In re Translogic Tech., Inc.*, 504 F.3d 1249, 1257 (Fed. Cir. 2007).

Rembrandt Wireless
Ex. 2012
Apple Inc. v. Rembrandt Wireless Technologies, LP, IPR2020-00033
Page 512

1. Modulation Methods

Illustrative claim 22 recites that at least two types of modulation methods comprise a first modulation method and a second modulation method, wherein the second modulation method is of a different type than the first modulation method.

Petitioner submits that the ordinary meaning of "modulation" is "'[t]he process by which some characteristic of a carrier is varied in accordance with a modulating wave.'" Pet. 14 (referring to Ex. 1423 ¶ 91 (Declaration of Dr. David Goodman); Ex. 1420, 3 (technical dictionary)). Patent Owner submits that "modulation method" is generally recognized in the pertinent art to mean "a technique for varying one or more characteristics of a carrier wave in a predetermined manner to convey information." PO Resp. 10. Patent Owner submits further, and we agree, that there appears to be no significant difference between these two proffered constructions of "modulation." *Id.* at 11–12.

Later in its Patent Owner Response, however, Patent Owner advocates a narrower definition for "modulation method" for the purpose of addressing the prior art. In particular, Patent Owner submits that the only three characteristics of a carrier wave are frequency, phase, and amplitude and, thus, "modulation" is limited to varying one or more of the frequency, phase, and amplitude of the carrier wave. *Id.* at 12–13. Patent Owner relies on the Declaration of Dr. Christopher R. Jones (Ex. 2814 ¶ 40). Dr. Jones, in turn, relies on a definition in one of several technical dictionaries that have been provided by Patent Owner. Ex. 2814 ¶ 39. In the particular technical

dictionary upon which Dr. Jones relies,[2] two of the six definitions of "modulation" use the terms amplitude, frequency, and phase. Ex. 2815, 3. The entry contains broader definitions for "modulation," as, for example, the first definition, which states that modulation is the process of varying some characteristic of a carrier wave, whereby the carrier wave can be a direct current, an alternating current, or "a series of regularly repeating, uniform pulses called a pulse chain." *Id.*

Patent Owner does not point to anything in the '228 patent's disclosure that would limit the definition of "modulation" to varying the amplitude, frequency, or phase of the carrier wave. Our reviewing court has "cautioned against relying on dictionary definitions at the expense of a fair reading of the claims, which must be understood in light of the specification." *Interval Licensing LLC v. AOL, Inc.*, 766 F.3d 1364, 1377 (Fed. Cir. 2014). We, therefore, interpret "modulation" in accordance with its customary and ordinary meaning as the process by which some characteristic of a carrier is varied in accordance with a modulating wave.

2. Types of Modulation Methods

As we have noted, the claims recite "types" of modulation methods. Petitioner and Patent Owner disagree with respect to the meaning of a "type" of modulation method. Patent Owner submits that the broadest reasonable interpretation of different "types" of modulation methods does not extend to modulation methods that are known merely to be incompatible with each other, but is limited to different "families" of modulation techniques, e.g., the FSK (frequency shift keying) "family" of modulation methods and the

[2] Rudolf F. Graf, MODERN DICTIONARY OF ELECTRONICS, 6th ed. (1997).

QAM (quadrature amplitude modulation) "family" of modulation methods. PO Resp. 12–13. Petitioner, on the other hand, contends that the broadest reasonable interpretation of a different "type" of modulation method means an "incompatible" modulation method. Pet. 9.

Patent Owner contends that a "special definition" was provided during prosecution of the '228 patent, which defined the term different "types" of modulation to mean different "families" of modulation. PO Resp. 12–13. At the outset, we agree with Petitioner (Pet. Reply 16) to the extent that prosecution history is entitled to little weight under the broadest reasonable interpretation standard. *See Tempo Lighting, Inc. v. Tivoli, LLC*, 742 F.3d 973, 978 (Fed. Cir. 2014) ("This court also observes that the PTO is under no obligation to accept a claim construction proffered as a prosecution history disclaimer, which generally only binds the patent owner."). In any event, Patent Owner relies on the following statements during prosecution for the asserted "special definition":

> Applicant thanks [the Examiner] for the indication that claims 1-18, and 37-57 are allowed (office action, p. 7). Applicant has further amended claims 1-2, 9-15, 18, 37-38, and 45-46 with additional recitations to more precisely claim the subject-matter. For example, the language of independent claim 1 has been clarified to refer to two *types* of modulation methods, *i.e.*, different families of modulation techniques, such as the FSK family of modulation methods and the QAM family of modulation methods.

Ex. 1418, 20 (Reply Pursuant to 37 CFR § 1.111 in parent application 12/543,910).

As made plain in the above remarks, the claim amendments with respect to two "types" of modulation methods were not made in response to

a rejection, as the relevant claims had been allowed. *Cf. Tempo Lighting*, 742 F.3d at 978 ("[I]n this instance, the PTO itself requested Tivoli rewrite the 'non-photoluminescent' limitation in positive terms. Tivoli complied, and then supplied clarification about the meaning of the 'inert to light.'"). Nor do the above remarks explain what a "family" might be, or why FSK is considered to be member of one "family" and QAM a member of another "family." "Although an inventor is indeed free to define the specific terms used to describe his or her invention, this must be done with reasonable clarity, deliberateness, and precision." *In re Paulsen*, 30 F.3d 1475, 1480 (Fed. Cir. 1994). Patent Owner's purported "definition" is anything but clear or precise. Further, the only modulation methods named in the text of the '228 patent are QAM, carrierless amplitude and phase (CAP) modulation,[3] and discrete multitone (DMT) modulation, each of which the patent calls "high performance modulation." *See, e.g.*, Ex. 1401, col. 2, ll. 3–7.

Patent Owner provides, as an exhibit, Provisional Application No. 60/067,562 (Ex. 2801), which the '228 patent purports to incorporate by reference (Ex. 1401, col. 1, ll. 8–17). That provisional distinguishes between "high performance modulation, such as QAM, CAP, or DMT," which are optimized for high performance, and "low performance modulation, such as FSK, PAM or DSB," which may be implemented in

[3] According to Patent Owner, the patent contains a typographical error in that "[c]arrier" should be "[c]arrierless." PO Resp. 10 n.3.

much less expensive devices. Ex. 2801, 4.[4] An objective reading of the above-noted remarks during prosecution suggests that, contrary to Patent Owner's arguments, the "different families of modulation techniques" refer to high performance modulation (such as QAM) and low performance modulation (such as FSK). The prosecution history is, at best, ambiguous. "It is inappropriate to limit a broad definition of a claim term based on prosecution history that is itself ambiguous." *Inverness Med. Switz. GmbH v. Warner Lambert Co.*, 309 F.3d 1373, 1382 (Fed. Cir. 2002).

Moreover, Patent Owner's proffered construction (*e.g.*, PO Resp. 13) of "types" of modulation methods being based on "one or more" of the carrier wave's frequency, phase, and amplitude "families" is, itself, ambiguous. We reproduce the following exchange during oral argument in related case IPR2014-00518, which concerns U.S. Patent No. 8,023,580 B2 (which issued from the parent application (12/543,910) of the '228 patent):

> JUDGE LEE: How do you summarize your position? What is the definition of different family?
>
> MR. MOLLAAGHABABA: Okay. I believe these three characteristics, phase, amplitude and frequency of the carrier wave, define these three families.
>
> Now, if two methods are using the same characteristic to modulate the wave, then they are not different types. I mean, DBPSK and DQPSK, they both use the phase, that characteristic of the carrier wave to modulate and convey information.
>
> JUDGE LEE: Okay. So phase is one family, amplitude is one, and frequency is another. So those are broad categories.

---

[4] The first page of Exhibit 2801 is unnumbered, and page 4 is numbered as page 3. *Cf.* 37 C.F.R. § 42.63(d)(2)(i) ("Each page must be uniquely numbered in sequence.").

MR. MOLLAAGHABABA: Yes.

JUDGE LEE: So you can only have three types then.

MR. MOLLAAGHABABA: But you can have situations where the modulation can belong to two categories.
I mean, there are some intersections. QAM modulates both amplitude and phase.

JUDGE LEE: So to which family would they belong?

MR. MOLLAAGHABABA: Well, they are part of both families. I mean, they belong to two -- both families. There is some intersections where some modulation techniques use more than one characteristic. They use two characteristics.

JUDGE LEE: Then are they of different types? If there is just only partial overlap, are they still different types, or is it the same type because they also share something in common?

MR. MOLLAAGHABABA: Yes, our contention is that they are not of different types. They are different in the sense that they are different methods, like QAM and PSK, but they share a family so, therefore, they are not different types. They share the family for both.

IPR2014-00518, Paper 46 at 88:8–89:17. Thus, according to counsel for Patent Owner, two modulation methods that are different in one characteristic but the same in another, e.g., one varying phase and amplitude and the other varying frequency and amplitude, would be regarded as belonging in the same family. Such an understanding of the classification or categorization of "family" in case of partial overlap was not a part of any representation during prosecution history. It reflects ambiguity in the construction proposed by Patent Owner.

The '228 patent describes Type A and Type B modulation methods (and tributary modems, or "tribs"), but does not associate directly any particular modulation method with a Type A or a Type B method (or "trib"). *See, e.g.*, Ex. 1401, col. 5, l. 47 – col. 7, l. 33. The provisional application, however, associates lower-cost FSK modems with Type B "tribs." Ex. 2801, 6; *see also* '228 patent —

> While it is possible to use high performance tribs running state of the art modulation methods such as QAM, CAP, or DMT to implement both the high and low data rate applications, significant cost savings can be achieved if lower cost tribs using low performance modulation methods are used to implement the lower data rate applications.

Ex. 1401, col. 5, ll. 41–46.

Further, the '228 patent does not draw distinctions between "families" of modulation techniques directed to differences in modulation with respect to amplitude, phase, or frequency. Rather, the '228 patent draws distinctions between relatively expensive high performance techniques and relatively inexpensive low performance techniques. The '228 patent attempts to remedy the asserted deficiency in the prior art that all modems in a system must use a single modulation method, and thus must all be high-performance modems, with the high-performance, relatively expensive modems merely lowering the data rate for lower data-rate applications. As the '228 patent explains:

> All users in the system will generally have to be equipped with a high performance modem to ensure modulation compatibility. These state of the art modems are then run at their lowest data rates for those applications that require relatively low data throughput performance. The replacement of inexpensive modems with much more expensive state of the art devices due

Rembrandt Wireless
Ex. 2012
Apple Inc. v. Rembrandt Wireless Technologies, LP, IPR2020-00033
IPR2020-00036 Page 00519
324
Page 519

> to modulation compatibility imposes a substantial cost that is unnecessary in terms of the service and performance to be delivered to the end user.

Ex. 1401, col. 2, ll. 10–18.

Further, the '228 patent refers to an objective of using multiple modulation methods to facilitate communication among a plurality of modems in a network, which have heretofore been "incompatible." *Id.* at col. 2, ll. 19–23.

In view of the foregoing, we do not interpret a "type" of modulation method as referring to some vague or undefined "family" of modulation methods. We interpret different "types" of modulation methods as modulation methods that are incompatible with one another. Thus, contrary to Patent Owner's construction, two modulation methods that are based on varying the same one of the frequency, amplitude, or phase of the carrier wave may be different "types" of modulation methods.

B. Prior Art

1. Admitted Prior Art

Petitioner contends that the '228 patent's disclosure of polled multipoint communications using masters and slaves, depicted in Figures 1 and 2 and described in column 3, line 64 through column 5, line 7, constitutes material that may be used as prior art against the patent under 35 U.S.C. § 103(a). We agree. Figure 1 of the patent is labeled as "Prior Art." Pet. 6; Ex. 1401, Fig. 1. Further, the '228 patent's specification refers to "prior art" multipoint communication system 22 comprising master modem or transceiver 24, which communicates with a plurality of tributary modems

Rembrandt Wireless
Ex. 2012
Apple Inc. v. Rembrandt Wireless Technologies, LP, IPR2020-00033
Page 520

("tribs") or transceivers 26. Pet. 5; Ex. 1401, col. 3, l. 64 – col. 4, l. 1. Further, the '228 patent describes Figure 2 as illustrating the operation of the multipoint communication system of (prior art) Figure 1. Pet. 6; Ex. 1401, col. 3, ll. 33–34.

2. Boer

Boer describes a wireless LAN that includes first stations that operate at 1 or 2 Mbps (Megabits per second) data rate and second stations that operate at 1, 2, 5, or 8 Mbps data rate. Ex. 1404, Abstract.

Figure 1 of Boer is reproduced below.

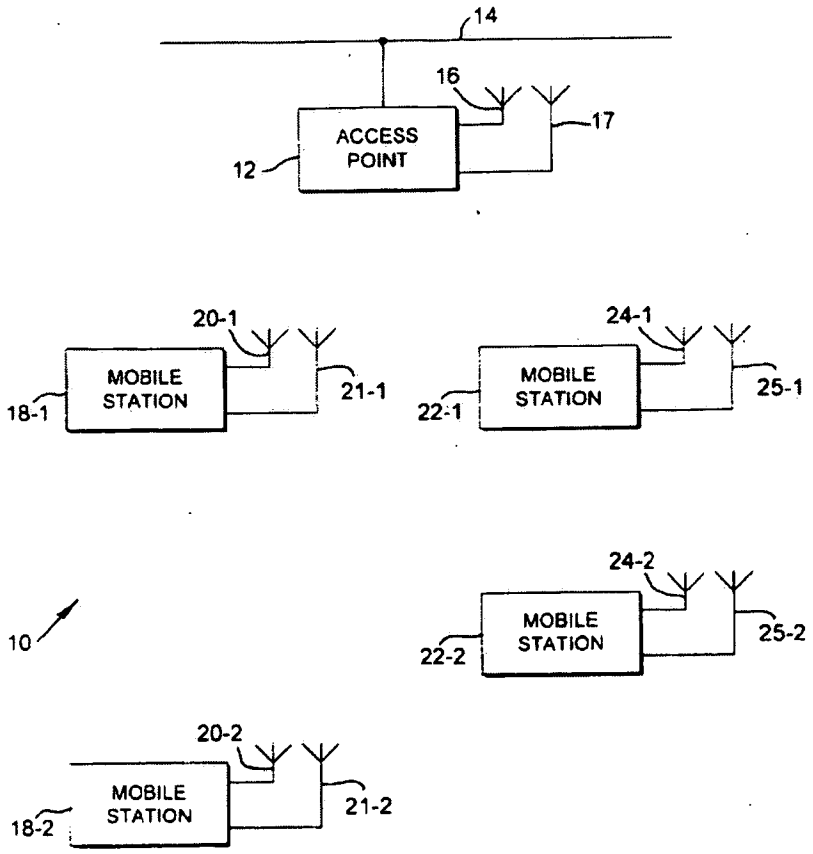

FIG.1

Rembrandt Wireless
Ex. 2012
Apple Inc. v. Rembrandt Wireless Technologies, LP, IPR2020-00033
Page 521

Figure 1 is said to be a block diagram of a wireless LAN embodying Boer's invention. Ex. 1404, col. 1, ll. 53–54. LAN 10 includes access point 12, serving as a base station. The network includes mobile stations 18-1 and 18-2 that are capable of transmitting and receiving messages at a data rate of 1 or 2 Mbps using DSSS (direct sequence spread spectrum) coding. When operating at 1 Mbps, a station uses DBPSK (differential binary phase shift keying) modulation. When operating at 2 Mbps, a station uses DQPSK (differential quadrature phase shift keying) modulation. *Id.* at col. 2, ll. 6–27. Mobile stations 22-1 and 22-2 are capable of operating at the 1 and 2 Mbps data rates using the same modulation and coding as stations 18-1 and 18-2. In addition, stations 22-1 and 22-2 can operate at 5 and 8 Mbps data rates using PPM/DQPSK (pulse position modulation–differential quadrature phase shift keying) in combination with the DSSS coding. *Id.* at col. 2, ll. 34–44.

C. Claims 22, 23, and 25 – APA and Boer

1. Asserted Ground

Petitioner applies the teachings of APA and Boer to demonstrate obviousness of the subject matter of illustrative claim 22, relying on APA for teaching of master/slave communication systems. Pet. 20– 30, 33–43 (claim chart). Petitioner submits that a person having ordinary skill in the art would have been motivated to combine Boer with APA, referring to the Declaration of Dr. David Goodman (Ex. 1423 ¶¶ 124–127). *Id.* at 18–20.

Dr. Goodman testifies that polled multiport master/slave communications systems were well known to those of ordinary skill in the art for simplicity and determinacy, referring to Exhibit 1422. Ex. 1423

Rembrandt Wireless
Ex. 2012
Apple Inc. v. Rembrandt Wireless Technologies, LP, IPR2020-00033
Page 522

¶ 127. Petitioner submits Exhibit 1422 ("Upender") as a November 1994 publication that compares various strengths and weaknesses for communication protocols for embedded systems. Ex. 1422, 7. The document states that polling is one of the more popular protocols for embedded systems "because of its simplicity and determinacy." *Id.* In that protocol, a centrally assigned master periodically sends a polling message to the slave nodes, giving them explicit permission to transmit on the network. *Id.* The protocol "is ideal for a centralized data-acquisition system where peer-to-peer communication and global prioritization are not required." *Id.*

2. Motivation to Combine

Patent Owner in its Response argues that Upender does not reflect a proper motivation from the prior art for the proffered combination of Boer and APA. Patent Owner submits a Declaration from a co-author of Upender to show that the article did not suggest the use of a master/slave communication system. Ex. 2808 (Declaration of Dr. Philip Koopman).

We have considered Patent Owner's arguments and evidence but find that the clear teachings in Upender are not diminished or rebutted. Upender investigates tradeoffs in different communication protocols. The article concludes that CSMA/CA (carrier sense multiple access with collision avoidance), or RCSMA (reservation CSMA), is a good choice for some embedded systems. Ex. 1422, 10–11. The article also indicates that polling may not provide sufficient flexibility for "advanced systems," classifying polling as "simple," but noting that the discussion of the different protocol strengths and weaknesses "should allow you to select the best protocol to match your needs." *Id.* In fact, Dr. Koopman admits that there are some

systems for which master/slave is a better match for the design requirements. Pet. Reply 10; Ex. 1424, 40:2–20.

That Upender may identify some advantages of CSMA/CA over a master/slave protocol is not a "teaching away" from the master/slave protocol. Upender teaches that master/slave protocols were widely used and a good choice for simple systems. *See In re Gurley*, 27 F.3d 551, 553 (Fed. Cir. 1994) ("[A] person seeking to improve the art of flexible circuit boards, on learning from [a reference] that epoxy was inferior to polyester-imide resins, might well be led to search beyond epoxy for improved products. However, [the reference] also teaches that epoxy is usable and has been used for Gurley's purpose.").

Patent Owner's position appears to be that the prior art teaches that one and only one communication protocol should ever be used, which is directly contrary to the clear teachings of Upender. In view of Upender, one of ordinary skill in the art would have found it obvious to use a different prior art communication protocol (e.g., a simpler protocol) when using multiple data rates as described by Boer.

Further, we agree with Petitioner that Boer does not describe CSMA as central to an alleged goal of seeking a "reduction of overhead-in-time per transmission," but relates that reduction to the use of short acknowledgment (ACK) messages. PO Resp. 34–35; Pet. Reply 12; Ex. 1404, col. 8, ll. 16–29.

Patent Owner submits that Dr. Goodman's Declaration (Ex. 1423) is unreliable because it is unclear what level of skill it attributes to the ordinary artisan. PO Resp. 33–34. The alleged lack of clarity, however, does not affect the outcome. We note that specifying the level of ordinary skill in

Rembrandt Wireless
Ex. 2012
Apple Inc. v. Rembrandt Wireless Technologies, LP, IPR2020-00033
Page 524

terms of an academic degree in a field of study and the number of years of practical working experience is generally unhelpful, as a practical matter, because it does not convey whether one with ordinary skill in the art would have been aware of anything specific or particular. Patent Owner has not directed us to evidence establishing what someone who has earned a certain degree or who has a certain number of years of experience necessarily knows. It is not always necessary, however, to have an express proposition on the level of ordinary skill in the art. The level of ordinary skill in the art may be reflected by the prior art of record. *See Okajima v. Bourdeau*, 261 F.3d 1350, 1355 (Fed. Cir. 2001); *In re GPAC Inc.*, 57 F.3d 1573, 1579 (Fed. Cir. 1995); *In re Oelrich*, 579 F.2d 86, 91 (CCPA 1978).

We agree with Patent Owner to the extent that one of skill in the art would not consider using a CSMA/CA protocol in a master/slave configuration. PO Resp. 39–41. That combination, however, is not contemplated by the asserted ground of unpatentability. As Patent Owner and Dr. Koopman recognize, the transmitted data used in Boer to effect the CSMCA/CA protocol would be "totally unnecessary" in a master/slave configuration. *Id.* at 46; Ex. 2808 ¶ 96.

3. Different Types of Modulation Methods

Illustrative claim 22 recites that at least two types of modulation methods comprise a first modulation method and a second modulation method, wherein the second modulation method is of a different type than the first modulation method. Petitioner contends that Boer's DBPSK modulation corresponds to the claimed "first" modulation method. *E.g.,* Pet. 25. Petitioner submits that either of Boer's DQPSK modulation and

PPM/DQPSK modulation corresponds to the claimed "second" modulation method because each of DQPSK modulation and PPM/DQPSK modulation is of a different type — i.e., not compatible with — DBPSK modulation. Pet. 25– 26; Ex. 1423 ¶¶ 153–162. On the record before us, we agree that DQPSK and PPM/DQPSK modulation methods are incompatible with DBPSK modulation. *See, e.g.,* Ex. 1423 ¶¶ 155–162.

Patent Owner responds, however, that neither of DQPSK and PPM/DQPSK can be considered a modulation method of a type different from DBPSK. PO Resp. 46–54. Patent Owner argues that DBPSK and DQPSK are not different "types" of modulation methods because the methods are within the same "family," because both vary the same fundamental characteristic of a carrier wave — its phase. *Id.* at 49–50. We do not find Patent Owner's argument to be persuasive because we are not convinced that the broadest reasonable interpretation of "types" of modulation is so limited. *See* Claim Interpretation, § II.A.2, *supra.*

Patent Owner alleges also that Boer does not describe DBPSK and DQPSK as "incompatible" modulation methods because mobile stations are disclosed as capable of transmitting and receiving using DBPSK and also using DQPSK. PO Resp. 48–49. However, whether one "type" of modulation is incompatible with another "type" concerns the method of modulation, not necessarily the modem for carrying out that method. That is, a modem might be designed (as in Boer) to transmit and receive using, separately, two incompatible modulation methods, but that does not mean the two modulation methods are compatible with each other.

Moreover, Boer describes PPM/DQPSK modulation, which falls within the meaning of a "different type" of modulation method, with respect

Rembrandt Wireless
Ex. 2012
Apple Inc. v. Rembrandt Wireless Technologies, LP, IPR2020-00033
Page 526
IPR2020-00036 Page 00526
331

to DBPSK, under our construction of the term. *Cf.* Ex. 1423 ¶ 157 ("5 Mbps or 8 Mbps PPM/DQPSK is a different 'type' of modulation than DBPSK under any possible claim construction."). According to Dr. Goodman, phase is not used in PPM, unlike in DBPSK and DQPSK modulation. *Id.* ¶ 158. In PPM, the start and stop time of a transmission is varied in response to the information to be transmitted, with the time shift being indicative of data bits. *Id.*

Patent Owner argues that PPM as used in Boer is not a modulation method. PO Resp. 50–55. Patent Owner's position, however, is based on the argument that a "modulation method" is limited to varying one or more of the "fundamental characteristics" of amplitude, frequency, and phase. We do not find the argument persuasive, in view of the requirement of construing the term in accordance with its broadest reasonable interpretation. *See* § II.A.1, *supra*. We acknowledge that Boer refers to PPM as "PPM type coding." PO Resp. 54; Ex. 1404, col. 4, ll. 45–48. However, as pointed out by Petitioner, Boer appears to use the terms "coding" and "modulation" interchangeably. Pet. Reply 22.

Moreover, Dr. Jones' Declaration is unclear in what is meant by PPM being not a carrier wave modulation technique "as utilized in Boer" or "within the context of Boer." Ex. 2814 ¶ 58. Dr. Jones submits that he holds numerous patents in types of modulation that include pulse-amplitude modulation (PAM). *Id.* ¶ 7. Patent Owner provides, as an exhibit, a technical treatise on communication systems engineering[5] that addresses

[5] John G. Proakis and Masoud Salehi, *Communication Systems Engineering*, Prentice Hall, Digital Transmission Though and AWGN Channel, Chap. 7, 438–44 (1994).

Rembrandt Wireless
Ex. 2012
Apple Inc. v. Rembrandt Wireless Technologies, LP, IPR2020-00033
Page 527

PAM and PPM as two types of "Pulse Modulation Signals." Ex. 2805, 438–44 (original page numbering). In PAM, "the information is conveyed by the amplitude of the pulse." *Id.* at 438. In PPM (consistent with Dr. Goodman's testimony (Ex. 1423 ¶ 158)), "the information is conveyed by the time interval in which the pulse is transmitted." Ex. 2805, 439.

With respect to whether PPM can be considered a modulation method, we credit the testimony of Petitioner's witness, Dr. Goodman, over that of Patent Owner's, Dr. Jones, for the additional reason that the term "modulation" is part of the descriptive name for PPM – pulse position *modulation*. Patent Owner has not explained sufficiently why pulse position *modulation* cannot be considered a *modulation* method. Although DBPSK and PPM/DQPSK may both vary the "phase" characteristic of the carrier wave, we are persuaded that with PPM the timing (start and stop time) of the transmission is another characteristic of the carrier wave that is varied. Pet. 26; PO Resp. 50–53 (both parties referencing testimony of Dr. Goodman); § II.A.1 *supra*. We disagree with Patent Owner's characterization of Dr. Goodman's deposition testimony as Dr. Goodman admitting "that selection of time slots does not alter the underlying carrier wave." PO Resp. 52. Dr. Goodman stated that "the selection of the timing wouldn't alter the *amplitude, the phase or the frequency* of that underlying sine wave." *Id.* (quoting Ex. 2811, 31:20–23) (emphasis added). Further, Patent Owner has not submitted sufficient evidence to show that "Dr. Goodman also agreed the PPM encoding is independent of the underlying modulated wave transmitted in the particular time slots." PO Resp. 53.

Rembrandt Wireless
Ex. 2012
Apple Inc. v. Rembrandt Wireless Technologies, LP, IPR2020-00033
Page 528

4. APA and Boer — Conclusion

Upon review of the Petition and supporting evidence, as well as the Patent Owner Response and supporting evidence, we conclude that Petitioner has demonstrated, by a preponderance of the evidence, that claims 22, 23, and 25 are unpatentable for obviousness over APA and Boer.

5. *Patent Owner's Motion to Exclude*

Patent Owner moves to exclude, under 37 C.F.R. § 42.64(c), Exhibits 1426, 1439, 1440, and 1441. Paper 34. Patent Owner submits that Exhibits 1426 and 1439 are irrelevant and constitute improper character evidence against Patent Owner's expert Dr. Koopman. However, we do not discredit Dr. Koopman's testimony based on anything contained in Exhibits 1426 and 1439. Nor do we rely on Exhibits 1440 and 1441, which were submitted by Petitioner as further evidence to show that PPM is a modulation method. Accordingly, Patent Owner's motion to exclude is *dismissed* as moot.

III. CONCLUSION

Petitioner has demonstrated by a preponderance of the evidence that claims 22, 23, and 25 are unpatentable for obviousness over APA and Boer.

IV. ORDER

In consideration of the foregoing, it is

ORDERED that claims 22, 23, and 25 of the '228 patent are *unpatentable*; and

FURTHER ORDERED that Patent Owner's motion to exclude evidence is *dismissed*; and

FURTHER ORDERED that, because this is a final written decision, parties to the proceeding seeking judicial review of the decision must comply with the notice and service requirements of 37 C.F.R. § 90.2.

Rembrandt Wireless
Ex. 2012
Apple Inc. v. Rembrandt Wireless Technologies, LP, IPR2020-00033
Page 530

For Petitioner:

J. Steven Baughman
Gabrielle E. Higgins
ROPES & GRAY LLP
steven.baughman@ropesgray.com
gabrielle.higgins@ropesgray.com

Daniel G. Cardy
DICKSTEIN SHAPIRO LLP
cardyd@dicksteinshapiro.com

For Patent Owner:

Thomas Engellenner
Reza Mollaaghababa
David Magee
PEPPER HAMILTON LLP
engellennert@pepperlaw.com
mollaagababar@pepperlaw.com
mageed@pepperlaw.com

Nancy Linck
ROTHWELL, FIGG, ERNST, & MANBECK, P.C.
nlinck@rothwellfigg.com

Trials@uspto.gov
571-272-7822

Paper 46
Date Entered: September 24, 2015

UNITED STATES PATENT AND TRADEMARK OFFICE

BEFORE THE PATENT TRIAL AND APPEAL BOARD

SAMSUNG ELECTRONICS CO. LTD., SAMSUNG ELECTRONICS AMERICA, INC., SAMSUNG TELECOMMUNICATIONS AMERICA, LLC, and SAMSUNG AUSTIN SEMICONDUCTOR, LLC,
Petitioner,

v.

REMBRANDT WIRELESS TECHNOLOGIES, LP,
Patent Owner.

Case IPR2014-00892
Patent 8,457,228 B2

Before JAMESON LEE, HOWARD B. BLANKENSHIP, and JUSTIN BUSCH, *Administrative Patent Judges.*

BLANKENSHIP, *Administrative Patent Judge.*

FINAL WRITTEN DECISION
35 U.S.C. § 318(a) and 37 C.F.R. § 42.73

I. BACKGROUND

Samsung Electronics Co. Ltd., Samsung Electronics America, Inc., Samsung Telecommunications America, LLC, and Samsung Austin Semiconductor, LLC (collectively, "Petitioner") filed a request for *inter*

partes review of claims 1–3, 5, and 10–21 of U.S. Patent No. 8,457,228 B2 ("the '228 patent," Ex. 1301) under 35 U.S.C. §§ 311–319. Paper 2 (Petition or "Pet."). The Board instituted an *inter partes* review of claims 1–3, 5, and 10–20 on an asserted ground of unpatentability for obviousness. Paper 8 ("Dec. on Inst.").

Subsequent to institution, Patent Owner Rembrandt Wireless Technologies, LP, filed a patent owner response (Paper 19, "PO Resp."). Petitioner filed a reply to the Patent Owner Response (Paper 29, "Pet. Reply").

Oral hearing was held on July 21, 2015.[1]

The Board has jurisdiction under 35 U.S.C. § 6(c). This final written decision is issued pursuant to 35 U.S.C. § 318(a) and 37 C.F.R. § 42.73.

For the reasons that follow, we determine that Petitioner has shown by a preponderance of the evidence that claims 1–3, 5, and 10–20 of the '228 patent are unpatentable.

A. Related Proceedings

According to Petitioner, the '228 patent is involved in the following lawsuit: *Rembrandt Wireless Technologies, LP v. Samsung Electronics Co.*, No. 2:13-cv-00213 (E.D. Tex. 2013). Pet. 1. The '228 patent also has been challenged in the following cases: *Samsung Electronics Co. v. Rembrandt Wireless Technologies, LP*, IPR2014-00889 (not instituted); *Samsung Electronics Co. v. Rembrandt Wireless Technologies, LP*, IPR2014-00890 (not instituted); *Samsung Electronics Co. v. Rembrandt Wireless Technologies, LP*, IPR2014-00891 (not instituted); *Samsung Electronics Co.*

[1] The record includes a transcript of the oral hearing. Paper 45.

v. Rembrandt Wireless Technologies, LP, IPR2014-00893 (final decision being issued concurrently); and *Samsung Electronics Co. v. Rembrandt Wireless Technologies, LP*, IPR2014-00895 (final decision being issued concurrently).

B. The '228 Patent

The '228 Patent issued from an application filed August 4, 2011, which claimed priority under 35 U.S.C. § 120 through a chain of intervening applications to an application filed December 4, 1998, and which further claimed priority under 35 U.S.C. § 119 to a provisional application filed December 5, 1997.

The technical field of the patent relates to data communications and modulators/demodulators (modems), and in particular to a data communications system in which a plurality of modems use different types of modulation in a network. Ex. 1301, col. 1, ll. 21–25; col. 1, l. 58 – col. 2, l. 23.

C. Illustrative Claim

Of the challenged claims, only claim 1 is independent.

> 1. A master communication device configured to communicate with one or more slave transceivers according to a master/slave relationship in which a slave communication from a slave device to the master communication device occurs in response to a master communication from the master communication device to the slave device, the master communication device comprising:
>
> a master transceiver configured to transmit a first message over a communication medium from the master

Rembrandt Wireless
Ex. 2012
Apple Inc. v. Rembrandt Wireless Technologies, LP, IPR2020-00033
Page 534

transceiver to the one or more slave transceivers, wherein the first message comprises:

first information modulated according to a first modulation method,

second information, including a payload portion, modulated according to the first modulation method, wherein the second information comprises data intended for one of the one or more slave transceivers and

first message address information that is indicative of the one of the one or more slave transceivers being an intended destination of the second information; and

said master transceiver configured to transmit a second message over the communication medium from the master transceiver to the one or more slave transceivers wherein the second message comprises:

third information modulated according to the first modulation method, wherein the third information comprises information that is indicative of an impending change in modulation to a second modulation method, and

fourth information, including a payload portion, transmitted after transmission of the third information, the fourth information being modulated according to the second modulation method, the second modulation method being of a different type than the first modulation method, wherein the fourth information comprises data intended for a single slave transceiver of the one or more slave transceivers, and

second message address information that is indicative of the single slave transceiver being an intended destination of the fourth information; and

wherein the second modulation method results in a higher data rate than the first modulation method.

Rembrandt Wireless
Ex. 2012
Apple Inc. v. Rembrandt Wireless Technologies, LP, IPR2020-00033
Page 535

D. Prior Art

Boer	US 5,706,428	Jan. 6, 1998	(Ex. 1304)

E. Asserted Ground of Unpatentability

The Board instituted *inter partes* review on the following asserted ground of unpatentability under 35 U.S.C. § 103(a) (Dec. on Inst. 15): claims 1–3, 5, and 10–20 of the '228 patent on the ground of obviousness over Admitted Prior Art ("APA") and Boer.

II. ANALYSIS

A. Claim Interpretation

In an *inter partes* review, the Board construes claim terms in an unexpired patent using their broadest reasonable construction in light of the specification of the patent in which they appear. 37 C.F.R. § 42.100(b); *In re Cuozzo Speed Techs., LLC*, 793 F.3d 1268, 1275–79 (Fed. Cir. 2015). The claim language should be read in light of the specification as it would be interpreted by one of ordinary skill in the art. *In re Am. Acad. of Sci. Tech. Ctr.*, 367 F.3d 1359, 1364 (Fed. Cir. 2004). The Office must apply the broadest reasonable meaning to the claim language, taking into account any definitions presented in the specification. *Id.* (citing *In re Bass*, 314 F.3d 575, 577 (Fed. Cir. 2002)). The "ordinary and customary meaning" is that which the term would have to a person of ordinary skill in the art in question. *In re Translogic Tech., Inc.*, 504 F.3d 1249, 1257 (Fed. Cir. 2007).

1. Modulation Methods

Illustrative claim 1 recites a master transceiver configured to transmit messages modulated according to a first and a second modulation method, "the second modulation method being of a different type than the first modulation method . . . ."

Petitioner submits that the ordinary meaning of "modulation" is "[t]he process by which some characteristic of a carrier is varied in accordance with a modulating wave." Pet. 13 (referring to Ex. 1323 ¶ 88 (Declaration of Dr. David Goodman); Ex. 1320, 3 (technical dictionary)). Patent Owner submits that "modulation method" is generally recognized in the pertinent art to mean "a technique for varying one or more characteristics of a carrier wave in a predetermined manner to convey information." PO Resp. 9. Patent Owner submits further, and we agree, that there appears to be no significant difference between these two proffered constructions of "modulation." *Id.* at 11.

Later in its Patent Owner Response, however, Patent Owner advocates a narrower definition for "modulation method" for the purpose of addressing the prior art. In particular, Patent Owner submits that the only three characteristics of a carrier wave are frequency, phase, and amplitude and, thus, "modulation" is limited to varying one or more of the frequency, phase, and amplitude of the carrier wave. *Id.* at 12–13. Patent Owner relies on the Declaration of Dr. Christopher R. Jones (Ex. 2714 ¶ 40). Dr. Jones, in turn, relies on a definition in one of several technical dictionaries that have been provided by Patent Owner. Ex. 2714 ¶ 39. In the particular technical

dictionary upon which Dr. Jones relies,[2] two of the six definitions of "modulation" use the terms amplitude, frequency, and phase. Ex. 2715, 3. The entry contains broader definitions for "modulation," as, for example, the first definition, which states that modulation is the process of varying some characteristic of a carrier wave, whereby the carrier wave can be a direct current, an alternating current, or "a series of regularly repeating, uniform pulses called a pulse chain." *Id.*

Patent Owner does not point to anything in the '228 patent's disclosure that would limit the definition of "modulation" to varying the amplitude, frequency, or phase of the carrier wave. Our reviewing court has "cautioned against relying on dictionary definitions at the expense of a fair reading of the claims, which must be understood in light of the specification." *Interval Licensing LLC v. AOL, Inc.*, 766 F.3d 1364, 1377 (Fed. Cir. 2014). We, therefore, interpret "modulation" in accordance with its customary and ordinary meaning as the process by which some characteristic of a carrier is varied in accordance with a modulating wave.

2. Types of Modulation Methods

As we have noted, the claims recite "types" of modulation methods. Petitioner and Patent Owner disagree with respect to the meaning of a "type" of modulation method. Patent Owner submits that the broadest reasonable interpretation of different "types" of modulation methods does not extend to modulation methods that are known merely to be incompatible with each other, but is limited to different "families" of modulation techniques, e.g., the FSK (frequency shift keying) "family" of modulation methods and the

[2] Rudolf F. Graf, MODERN DICTIONARY OF ELECTRONICS, 6th ed. (1997).

QAM (quadrature amplitude modulation) "family" of modulation methods. PO Resp. 11–12. Petitioner, on the other hand, contends that the broadest reasonable interpretation of a different "type" of modulation method means an "incompatible" modulation method. Pet. 12.

Patent Owner contends that a "special definition" was provided during prosecution of the '228 patent, which defined the term different "types" of modulation to mean different "families" of modulation. PO Resp. 11–12. At the outset, we agree with Petitioner (Pet. Reply 16) to the extent that prosecution history is entitled to little weight under the broadest reasonable interpretation standard. *See Tempo Lighting, Inc. v. Tivoli, LLC*, 742 F.3d 973, 978 (Fed. Cir. 2014) ("This court also observes that the PTO is under no obligation to accept a claim construction proffered as a prosecution history disclaimer, which generally only binds the patent owner."). In any event, Patent Owner relies on the following statements during prosecution for the asserted "special definition":

> Applicant thanks [the Examiner] for the indication that claims 1-18, and 37-57 are allowed (office action, p. 7). Applicant has further amended claims 1-2, 9-15, 18, 37-38, and 45-46 with additional recitations to more precisely claim the subject-matter. For example, the language of independent claim 1 has been clarified to refer to two *types* of modulation methods, *i.e.*, different families of modulation techniques, such as the FSK family of modulation methods and the QAM family of modulation methods.

Ex. 1318, 20 (Reply Pursuant to 37 CFR § 1.111 in parent application 12/543,910).

As made plain in the above remarks, the claim amendments with respect to two "types" of modulation methods were not made in response to

Rembrandt Wireless
Ex. 2012
Apple Inc. v. Rembrandt Wireless Technologies, LP, IPR2020-00033
Page 539

a rejection, as the relevant claims had been allowed. *Cf. Tempo Lighting*, 742 F.3d at 978 ("[I]n this instance, the PTO itself requested Tivoli rewrite the 'non-photoluminescent' limitation in positive terms. Tivoli complied, and then supplied clarification about the meaning of the 'inert to light.'"). Nor do the above remarks explain what a "family" might be, or why FSK is considered to be member of one "family" and QAM a member of another "family." "Although an inventor is indeed free to define the specific terms used to describe his or her invention, this must be done with reasonable clarity, deliberateness, and precision." *In re Paulsen*, 30 F.3d 1475, 1480 (Fed. Cir. 1994). Patent Owner's purported "definition" is anything but clear or precise. Further, the only modulation methods named in the text of the '228 patent are QAM, carrierless amplitude and phase (CAP) modulation,[3] and discrete multitone (DMT) modulation, each of which the patent calls "high performance modulation." *See, e.g.*, Ex. 1301, col. 2, ll. 3–7.

Patent Owner provides, as an exhibit, Provisional Application No. 60/067,562 (Ex. 2701), which the '228 patent purports to incorporate by reference (Ex. 1301, col. 1, ll. 8–17). That provisional distinguishes between "high performance modulation, such as QAM, CAP, or DMT," which are optimized for high performance, and "low performance modulation, such as FSK, PAM or DSB," which may be implemented in

[3] According to Patent Owner, the patent contains a typographical error in that "[c]arrier" should be "[c]arrierless." PO Resp. 10 n.3.

much less expensive devices. Ex. 2701, 4.[4] An objective reading of the above-noted remarks during prosecution suggests that, contrary to Patent Owner's arguments, the "different families of modulation techniques" refer to high performance modulation (such as QAM) and low performance modulation (such as FSK). The prosecution history is, at best, ambiguous. "It is inappropriate to limit a broad definition of a claim term based on prosecution history that is itself ambiguous." *Inverness Med. Switz. GmbH v. Warner Lambert Co.*, 309 F.3d 1373, 1382 (Fed. Cir. 2002).

Moreover, Patent Owner's proffered construction (*e.g.*, PO Resp. 13) of "types" of modulation methods being based on "one or more" of the carrier wave's frequency, phase, and amplitude "families" is, itself, ambiguous. We reproduce the following exchange during oral argument in related case IPR2014-00518, which concerns U.S. Patent No. 8,023,580 B2 (which issued from the parent application (12/543,910) of the '228 patent):

> JUDGE LEE: How do you summarize your position? What is the definition of different family?
>
> MR. MOLLAAGHABABA: Okay. I believe these three characteristics, phase, amplitude and frequency of the carrier wave, define these three families.
>
> Now, if two methods are using the same characteristic to modulate the wave, then they are not different types. I mean, DBPSK and DQPSK, they both use the phase, that characteristic of the carrier wave to modulate and convey information.

---

[4] The first page of Exhibit 2701 is unnumbered, and page 4 is numbered as page 3. *Cf.* 37 C.F.R. § 42.63(d)(2)(i) ("Each page must be uniquely numbered in sequence.").

> JUDGE LEE: Okay. So phase is one family, amplitude is one, and frequency is another. So those are broad categories.
>
> MR. MOLLAAGHABABA: Yes.
>
> JUDGE LEE: So you can only have three types then.
>
> MR. MOLLAAGHABABA: But you can have situations where the modulation can belong to two categories.
> I mean, there are some intersections. QAM modulates both amplitude and phase.
>
> JUDGE LEE: So to which family would they belong?
>
> MR. MOLLAAGHABABA: Well, they are part of both families. I mean, they belong to two -- both families. There is some intersections where some modulation techniques use more than one characteristic. They use two characteristics.
>
> JUDGE LEE: Then are they of different types? If there is just only partial overlap, are they still different types, or is it the same type because they also share something in common?
>
> MR. MOLLAAGHABABA: Yes, our contention is that they are not of different types. They are different in the sense that they are different methods, like QAM and PSK, but they share a family so, therefore, they are not different types. They share the family for both.

IPR2014-00518, Paper 46 at 88:8–89:17. Thus, according to counsel for Patent Owner, two modulation methods that are different in one characteristic but the same in another, e.g., one varying phase and amplitude and the other varying frequency and amplitude, would be regarded as belonging in the same family. Such an understanding of the classification or categorization of "family" in case of partial overlap was not a part of any

Rembrandt Wireless
Ex. 2012
Apple Inc. v. Rembrandt Wireless Technologies, LP, IPR2020-00033
Page 542

representation during prosecution history. It reflects ambiguity in the construction proposed by Patent Owner.

The '228 patent describes Type A and Type B modulation methods (and tributary modems, or "tribs"), but does not associate directly any particular modulation method with a Type A or a Type B method (or "trib"). *See, e.g.*, Ex. 1301, col. 5, l. 47 – col. 7, l. 33. The provisional application, however, associates lower-cost FSK modems with Type B "tribs." Ex. 2701, 6; *see also* '228 patent —

> While it is possible to use high performance tribs running state of the art modulation methods such as QAM, CAP, or DMT to implement both the high and low data rate applications, significant cost savings can be achieved if lower cost tribs using low performance modulation methods are used to implement the lower data rate applications.

Ex. 1301, col. 5, ll. 41–46.

Further, the '228 patent does not draw distinctions between "families" of modulation techniques directed to differences in modulation with respect to amplitude, phase, or frequency. Rather, the '228 patent draws distinctions between relatively expensive high performance techniques and relatively inexpensive low performance techniques. The '228 patent attempts to remedy the asserted deficiency in the prior art that all modems in a system must use a single modulation method, and thus must all be high-performance modems, with the high-performance, relatively expensive modems merely lowering the data rate for lower data-rate applications. As the '228 patent explains:

> All users in the system will generally have to be equipped with a high performance modem to ensure modulation compatibility. These state of the art modems are then run at their lowest data

Rembrandt Wireless
Ex. 2012
Apple Inc. v. Rembrandt Wireless Technologies, LP, IPR2020-00033
Page 543

> rates for those applications that require relatively low data throughput performance. The replacement of inexpensive modems with much more expensive state of the art devices due to modulation compatibility imposes a substantial cost that is unnecessary in terms of the service and performance to be delivered to the end user.

Ex. 1301, col. 2, ll. 10–18.

Further, the '228 patent refers to an objective of using multiple modulation methods to facilitate communication among a plurality of modems in a network, which have heretofore been "incompatible." *Id.* at col. 2, ll. 19–23.

In view of the foregoing, we do not interpret a "type" of modulation method as referring to some vague or undefined "family" of modulation methods. We interpret different "types" of modulation methods as modulation methods that are incompatible with one another. Thus, contrary to Patent Owner's construction, two modulation methods that are based on varying the same one of the frequency, amplitude, or phase of the carrier wave may be different "types" of modulation methods.

B. Prior Art

1. Admitted Prior Art

Petitioner contends that the '228 patent's disclosure of polled multipoint communications using masters and slaves, depicted in Figures 1 and 2 and described in column 3, line 64 through column 5, line 7, constitutes material that may be used as prior art against the patent under 35 U.S.C. § 103(a). We agree. Figure 1 of the patent is labeled as "Prior Art." Pet. 6; Ex. 1301, Fig. 1. Further, the '228 patent's specification refers to

Rembrandt Wireless
Ex. 2012
Apple Inc. v. Rembrandt Wireless Technologies, LP, IPR2020-00033
Page 544

"prior art" multipoint communication system 22 comprising master modem or transceiver 24, which communicates with a plurality of tributary modems ("tribs") or transceivers 26. Pet. 5; Ex. 1301, col. 3, l. 64 – col. 4, l. 1. Further, the '228 patent describes Figure 2 as illustrating the operation of the multipoint communication system of (prior art) Figure 1. Pet. 6; Ex. 1301, col. 3, ll. 33–34.

2. Boer

Boer describes a wireless LAN that includes first stations that operate at 1 or 2 Mbps (Megabits per second) data rate and second stations that operate at 1, 2, 5, or 8 Mbps data rate. Ex. 1304, Abstract.

Figure 1 of Boer is reproduced below.

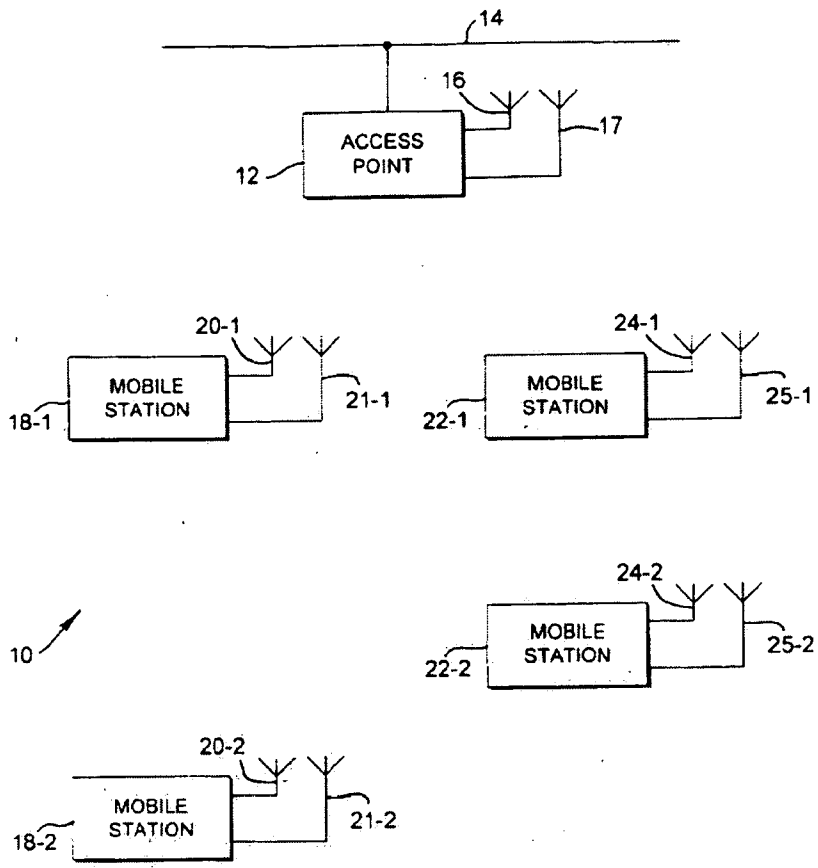

FIG.1

Figure 1 is said to be a block diagram of a wireless LAN embodying Boer's invention. Ex. 1304, col. 1, ll. 53–54. LAN 10 includes access point 12, serving as a base station. The network includes mobile stations 18-1 and 18-2 that are capable of transmitting and receiving messages at a data rate of 1 or 2 Mbps using DSSS (direct sequence spread spectrum) coding. When operating at 1 Mbps, a station uses DBPSK (differential binary phase shift keying) modulation. When operating at 2 Mbps, a station uses DQPSK (differential quadrature phase shift keying) modulation. *Id.* at col. 2, ll. 6–

Rembrandt Wireless
Ex. 2012
Apple Inc. v. Rembrandt Wireless Technologies, LP, IPR2020-00033
Page 546

27. Mobile stations 22-1 and 22-2 are capable of operating at the 1 and 2 Mbps data rates using the same modulation and coding as stations 181 and 182. In addition, stations 22-1 and 22-2 can operate at 5 and 8 Mbps data rates using PPM/DQPSK (pulse position modulation–differential quadrature phase shift keying) in combination with the DSSS coding. *Id.* at ll. 34–44.

C. Claims 1–3, 5, and 10–20 – APA and Boer

1. Asserted Ground

Petitioner applies the teachings of APA and Boer to demonstrate obviousness of the subject matter of illustrative claim 1, relying on APA for teaching of master/slave communication systems. Pet. 20– 29, 40–48 (claim chart). Petitioner submits that a person having ordinary skill in the art have would been motivated to combine Boer with APA, referring to the Declaration of Dr. David Goodman (Ex. 1323 ¶¶ 121–124). *Id.* at 19–20.

Dr. Goodman testifies that polled multiport master/slave communications systems were well known to those of ordinary skill in the art for simplicity and determinacy, referring to Exhibit 1322. Ex. 1323 ¶ 124. Petitioner submits Exhibit 1322 as a November 1994 publication that compares various strengths and weaknesses for communication protocols for embedded systems. Ex. 1322, 7. The document states that polling is one of the more popular protocols for embedded systems "because of its simplicity and determinacy." *Id.* In that protocol, a centrally assigned master periodically sends a polling message to the slave nodes, giving them explicit permission to transmit on the network. *Id.* The protocol "is ideal for a centralized data-acquisition system where peer-to-peer communication and global prioritization are not required." *Id.*

2. Motivation to Combine

Patent Owner in its Response argues that Upender does not reflect a proper motivation from the prior art for the proffered combination of Boer and APA. Patent Owner submits a Declaration from a co-author of Upender to show that the article did not suggest the use of a master/slave communication system. Ex. 2708 (Declaration of Dr. Philip Koopman).

We have considered Patent Owner's arguments and evidence but find that the clear teachings in Upender are not diminished or rebutted. Upender investigates tradeoffs in different communication protocols. The article concludes that CSMA/CA (carrier sense multiple access with collision avoidance), or RCSMA (reservation CSMA), is a good choice for some embedded systems. Ex. 1322, 10–11. The article also indicates that polling may not provide sufficient flexibility for "advanced systems," classifying polling as "simple," but noting that the discussion of the different protocol strengths and weaknesses "should allow you to select the best protocol to match your needs." *Id.* In fact, Dr. Koopman admits that there are some systems for which master/slave is a better match for the design requirements. Pet. Reply 10; Ex. 1324, 40:2–20.

That Upender may identify some advantages of CSMA/CA over a master/slave protocol is not a "teaching away" from the master/slave protocol. Upender teaches that master/slave protocols were widely used and a good choice for simple systems. *See In re Gurley*, 27 F.3d 551, 553 (Fed. Cir. 1994) ("[A] person seeking to improve the art of flexible circuit boards, on learning from [a reference] that epoxy was inferior to polyester-imide resins, might well be led to search beyond epoxy for improved products.

However, [the reference] also teaches that epoxy is usable and has been used for Gurley's purpose.").

Patent Owner's position appears to be that the prior art teaches that one and only one communication protocol should ever be used, which is directly contrary to the clear teachings of Upender. In view of Upender, one of ordinary skill in the art would have found it obvious to use a different prior art communication protocol (e.g., a simpler protocol) when using multiple data rates as described by Boer.

Further, we agree with Petitioner that Boer does not describe CSMA as central to an alleged goal of seeking a "reduction of overhead-in-time per transmission," but relates that reduction to the use of short acknowledgment (ACK) messages. PO Resp. 41–42; Pet. Reply 12; Ex. 1304, col. 8, ll. 16–29.

Patent Owner submits that Dr. Goodman's Declaration (Ex. 1323) is unreliable because it is unclear what level of skill it attributes to the ordinary artisan. PO Resp. 32–33. The alleged lack of clarity, however, does not affect the outcome. We note that specifying the level of ordinary skill in terms of an academic degree in a field of study and the number of years of practical working experience is generally unhelpful, as a practical matter, because it does not convey whether one with ordinary skill in the art would have been aware of anything specific or particular. Patent Owner has not directed us to evidence establishing what someone who has earned a certain degree or who has a certain number of years of experience necessarily knows. It is not always necessary, however, to have an express proposition on the level of ordinary skill in the art. The level of ordinary skill in the art may be reflected by the prior art of record. *See Okajima v. Bourdeau*, 261

F.3d 1350, 1355 (Fed. Cir. 2001); *In re GPAC Inc.*, 57 F.3d 1573, 1579 (Fed. Cir. 1995); *In re Oelrich*, 579 F.2d 86, 91 (CCPA 1978).

We agree with Patent Owner to the extent that one of skill in the art would not consider using a CSMA/CA protocol in a master/slave configuration. PO Resp. 38–40. That combination, however, is not contemplated by the asserted ground of unpatentability. As Patent Owner and Dr. Koopman recognize, the transmitted data used in Boer to effect the CSMCA/CA protocol would be "totally unnecessary" in a master/slave configuration. *Id.* at 45; Ex. 2708 ¶ 96.

3. Different Types of Modulation Methods

Illustrative claim 1 recites two types of modulation methods, "the second modulation method being of a different type than the first modulation method." Petitioner contends that Boer's DBPSK modulation corresponds to the claimed "first" modulation method. *E.g.,* Pet. 26. Petitioner submits that either of Boer's DQPSK modulation and PPM/DQPSK modulation corresponds to the claimed "second" modulation method because each of DQPSK modulation and PPM/DQPSK modulation is of a different type — i.e., not compatible with — DBPSK modulation. Pet. 26–27; Ex. 1323 ¶¶ 126–134. On the record before us, we agree that DQPSK and PPM/DQPSK modulation methods are incompatible with DBPSK modulation. *See, e.g.,* Ex. 1323 ¶¶ 157–163.

Patent Owner responds, however, that neither of DQPSK and PPM/DQPSK can be considered a modulation method of a type different from DBPSK. PO Resp. 46–54. Patent Owner argues that DBPSK and DQPSK are not different "types" of modulation methods because the

Rembrandt Wireless
Ex. 2012
Apple Inc. v. Rembrandt Wireless Technologies, LP, IPR2020-00033
Page 550

methods are within the same "family," because both vary the same fundamental characteristic of a carrier wave — its phase. *Id.* at 48–49. We do not find Patent Owner's argument to be persuasive because we are not convinced that the broadest reasonable interpretation of "types" of modulation is so limited. *See* Claim Interpretation, § II.A.2, *supra*.

Patent Owner alleges also that Boer does not describe DBPSK and DQPSK as "incompatible" modulation methods because mobile stations are disclosed as capable of transmitting and receiving using DBPSK and also using DQPSK. PO Resp. 47–48. However, whether one "type" of modulation is incompatible with another "type" concerns the method of modulation, not necessarily the modem for carrying out that method. That is, a modem might be designed (as in Boer) to transmit and receive using, separately, two incompatible modulation methods, but that does not mean the two modulation methods are compatible with each other.

Moreover, Boer describes PPM/DQPSK modulation, which falls within the meaning of a "different type" of modulation method, with respect to DBPSK, under our construction of the term. *Cf.* Ex. 1323 ¶ 159 ("Five Mbps PPM/DQPSK and eight Mbps PPM/DQPSK are different 'types' of modulation than DBPSK under any possible claim construction."). According to Dr. Goodman, phase is not used in PPM, unlike in DBPSK and DQPSK modulation. *Id.* ¶ 160. In PPM, the start and stop time of a transmission is varied in response to the information to be transmitted, with the time shift being indicative of data bits. *Id.*

Patent Owner argues that PPM as used in Boer is not a modulation method. PO Resp. 49–54. Patent Owner's position, however, is based on the argument that a "modulation method" is limited to varying one or more

Rembrandt Wireless
Ex. 2012
Apple Inc. v. Rembrandt Wireless Technologies, LP, IPR2020-00033
Page 551

of the "fundamental characteristics" of amplitude, frequency, and phase. We do not find the argument persuasive, in view of the requirement of construing the term in accordance with its broadest reasonable interpretation. *See* § II.A.1, *supra*. We acknowledge that Boer refers to PPM as "PPM type coding." PO Resp. 52; Ex. 1304, col. 4, ll. 45–48. However, as pointed out by Petitioner, Boer appears to use the terms "coding" and "modulation" interchangeably. Pet. Reply 22–23.

Moreover, Dr. Jones' Declaration is unclear in what is meant by PPM being not a carrier wave modulation technique "as utilized in Boer" or "within the context of Boer." Ex. 2714 ¶ 58. Dr. Jones submits that he holds numerous patents in types of modulation that include pulse-amplitude modulation (PAM). *Id.* ¶ 7. Patent Owner provides, as an exhibit, a technical treatise on communication systems engineering[5] that addresses PAM and PPM as two types of "Pulse Modulation Signals." Ex. 2705, 438–44 (original page numbering). In PAM, "the information is conveyed by the amplitude of the pulse." *Id.* at 438. In PPM (consistent with Dr. Goodman's testimony (Ex. 1323 ¶ 160)), "the information is conveyed by the time interval in which the pulse is transmitted." Ex. 2705, 439.

With respect to whether PPM can be considered a modulation method, we credit the testimony of Petitioner's witness, Dr. Goodman, over that of Patent Owner's, Dr. Jones, for the additional reason that the term "modulation" is part of the descriptive name for PPM – pulse position *modulation*. Patent Owner has not explained sufficiently why pulse position

[5] John G. Proakis and Masoud Salehi, *Communication Systems Engineering*, Prentice Hall, Digital Transmission Though and AWGN Channel, Chap. 7, 438–44 (1994).

modulation cannot be considered a *modulation* method. Although DBPSK and PPM/DQPSK may both vary the "phase" characteristic of the carrier wave, we are persuaded that with PPM the timing (start and stop time) of the transmission is another characteristic of the carrier wave that is varied. Pet. 27; PO Resp. 51–53 (both parties referencing testimony of Dr. Goodman); § II.A.1 *supra*. We disagree with Patent Owner's characterization of Dr. Goodman's deposition testimony as Dr. Goodman admitting "that selection of time slots does not alter the underlying carrier wave." PO Resp. 52. Dr. Goodman stated that "the selection of the timing wouldn't alter the *amplitude, the phase or the frequency* of that underlying sine wave." *Id.* (quoting Ex. 2711, 31:20–23) (emphasis added). Further, Patent Owner has not submitted sufficient evidence to show that "Dr. Goodman also agreed the PPM encoding is independent of the underlying modulated wave transmitted in the particular time slots." PO Resp. 52–53.

4. APA and Boer — Conclusion

Upon review of the Petition and supporting evidence, as well as the Patent Owner Response and supporting evidence, we conclude that Petitioner has demonstrated, by a preponderance of the evidence, that claims 1–3, 5, and 10–20 are unpatentable for obviousness over APA and Boer.

5. *Patent Owner's Motion to Exclude*

Patent Owner moves to exclude, under 37 C.F.R. § 42.64(c), Exhibits 1326, 1339, 1340, and 1341. Paper 36. Patent Owner submits that Exhibits 1326 and 1339 are irrelevant and constitute improper character evidence against Patent Owner's expert Dr. Koopman. However, we do not discredit

Rembrandt Wireless
Ex. 2012
Apple Inc. v. Rembrandt Wireless Technologies, LP, IPR2020-00033
Page 553

Dr. Koopman's testimony based on anything contained in Exhibits 1326 and 1339. Nor do we rely on Exhibits 1340 and 1341, which were submitted by Petitioner as further evidence to show that PPM is a modulation method. Accordingly, Patent Owner's motion to exclude is *dismissed* as moot.

III. CONCLUSION

Petitioner has demonstrated by a preponderance of the evidence that claims 1–3, 5, and 10–20 are unpatentable for obviousness over APA and Boer.

IV. ORDER

In consideration of the foregoing, it is

ORDERED that claims 1–3, 5, and 10–20 of the '228 patent are *unpatentable*; and

FURTHER ORDERED that Patent Owner's motion to exclude evidence is *dismissed*; and

FURTHER ORDERED that, because this is a final written decision, parties to the proceeding seeking judicial review of the decision must comply with the notice and service requirements of 37 C.F.R. § 90.2.

For Petitioner:

J. Steven Baughman
Gabrielle E. Higgins
ROPES & GRAY LLP
steven.baughman@ropesgray.com
gabrielle.higgins@ropesgray.com

Daniel G. Cardy
DICKSTEIN SHAPIRO LLP
cardyd@dicksteinshapiro.com

For Patent Owner:

Thomas Engellenner
Reza Mollaaghababa
David Magee
PEPPER HAMILTON LLP
engellennert@pepperlaw.com
mollaagababar@pepperlaw.com
mageed@pepperlaw.com

Nancy Linck
ROTHWELL, FIGG, ERNST, & MANBECK, P.C.
nlinck@rothwellfigg.com

Trials@uspto.gov
571-272-7822

Paper 44
Date Entered: September 24, 2015

UNITED STATES PATENT AND TRADEMARK OFFICE

BEFORE THE PATENT TRIAL AND APPEAL BOARD

SAMSUNG ELECTRONICS CO. LTD., SAMSUNG ELECTRONICS AMERICA, INC., SAMSUNG TELECOMMUNICATIONS AMERICA, LLC, and SAMSUNG AUSTIN SEMICONDUCTOR, LLC,
Petitioner,

v.

REMBRANDT WIRELESS TECHNOLOGIES, LP,
Patent Owner.

Case IPR2014-00895
Patent 8,457,228 B2

Before JAMESON LEE, HOWARD B. BLANKENSHIP, and JUSTIN BUSCH, *Administrative Patent Judges.*

BUSCH, *Administrative Patent Judge.*

FINAL WRITTEN DECISION
35 U.S.C. § 318(a) and 37 C.F.R. § 42.73

I. BACKGROUND

Samsung Electronics Co. Ltd., Samsung Electronics America, Inc., Samsung Telecommunications America, LLC, and Samsung Austin Semiconductor, LLC (collectively, "Petitioner") filed a request for *inter*

partes review of claims 26–29, 31, 36–41, 43, and 47–52 of U.S. Patent No. 8,457,228 B2 ("the '228 patent," Ex. 1501) under 35 U.S.C. §§ 311–319. Paper 2 (Petition or "Pet."). The Board instituted an *inter partes* review of claims 26–29, 31, 36–41, 43, and 47–52 on an asserted ground of unpatentability for obviousness. Paper 8 ("Dec. on Inst.").

Subsequent to institution, Patent Owner Rembrandt Wireless Technologies, LP, filed a patent owner response (Paper 17, "PO Resp."). Petitioner filed a reply to the Patent Owner Response (Paper 27, "Pet. Reply").

Oral hearing was held on July 21, 2015.[1]

The Board has jurisdiction under 35 U.S.C. § 6(c). This final written decision is issued pursuant to 35 U.S.C. § 318(a) and 37 C.F.R. § 42.73.

For the reasons that follow, we determine that Petitioner has shown by a preponderance of the evidence that claims 26–29, 31, 36–41, 43, and 47–52 of the '228 patent are unpatentable.

A. Related Proceedings

According to Petitioner, the '228 patent is involved in the following lawsuit: *Rembrandt Wireless Technologies, LP v. Samsung Electronics Co.*, No. 2:13-cv-00213 (E.D. Tex. 2013). Pet. 1. The '228 patent also has been challenged in the following cases: *Samsung Electronics Co. v. Rembrandt Wireless Technologies, LP*, IPR2014-00889 (not instituted); *Samsung Electronics Co. v. Rembrandt Wireless Technologies, LP*, IPR2014-00890 (not instituted); *Samsung Electronics Co. v. Rembrandt Wireless Technologies, LP*, IPR2014-00891 (not instituted); *Samsung Electronics Co.*

[1] The record includes a transcript of the oral hearing. Paper 43.

v. Rembrandt Wireless Technologies, LP, IPR2014-00892 (final decision being issued concurrently); and *Samsung Electronics Co. v. Rembrandt Wireless Technologies, LP*, IPR2014-00893 (final decision being issued concurrently). *Id.* at 2.

B. The '228 Patent

The '228 Patent issued from an application filed August 4, 2011, which claimed priority under 35 U.S.C. § 120 through a chain of intervening applications to an application filed December 4, 1998, and which further claimed priority under 35 U.S.C. § 119 to a provisional application filed December 5, 1997.

The technical field of the patent relates to data communications and modulators/demodulators (modems), and in particular to a data communications system in which a plurality of modems use different types of modulation in a network. Ex. 1501, 1:21–25, 1:58–2:23.

C. Illustrative Claim

Of the challenged claims, only claim 26 is independent.

> 26. A master communication device configured to communicate according to a master/slave relationship in which a slave communication from a slave device to the master communication device occurs in response to a master communication from the master communication device to the slave device, the master communication device comprising:
>
> a transceiver configured to transmit signals over a communications medium to a slave device using at least two different types of modulation methods and to receive one or more responses over the communication medium that comprise at least respective response data that is modulated according to one of the at least two different types of modulation methods,

Rembrandt Wireless
Ex. 2012
Apple Inc. v. Rembrandt Wireless Technologies, LP, IPR2020-00033
Page 558

the at least two different types of modulation methods comprising a first modulation method and a second modulation method, wherein the transmitted signals comprise first transmitted signals and second transmitted signals, the first transmitted signals comprise at least two transmission sequences, the at least two transmission sequences include a first transmission sequence and a second transmission sequence, the transceiver is configured to transmit the first transmission sequence using the first modulation method, and the transceiver is configured to transmit the second transmission sequence using the second modulation method wherein:

the first transmission sequence includes information that is indicative of an impending change in modulation method from the first modulation method to the second modulation method,

the second transmission sequence includes a payload portion that is transmitted after the first transmission sequence,

the first transmitted signals include first address information that is indicative of the slave device being an intended destination of the payload portion,

the second transmitted signals comprise at least a third transmission sequence and a fourth transmission sequence,

the transceiver is configured to transmit the third transmission sequence using the first modulation method,

the transceiver is configured to transmit the fourth transmission sequence using the first modulation method,

the third transmission sequence includes information indicative that the fourth transmission sequence will be transmitted using the first modulation method,

Rembrandt Wireless
Ex. 2012
Apple Inc. v. Rembrandt Wireless Technologies, LP, IPR2020-00033
Page 559
IPR2020-00036 Page 00559
364

the fourth transmission sequence includes a second payload portion that is transmitted after the third transmission sequence, and

the second transmitted signals include second address information that is indicative of a specified slave device being an intended destination of the second payload portion.

D. Prior Art

Boer	US 5,706,428	Jan. 6, 1998	(Ex. 1504)

E. Asserted Ground of Unpatentability

The Board instituted *inter partes* review on the following asserted ground of unpatentability under 35 U.S.C. § 103(a) (Dec. on Inst. 16): claims 26–29, 31, 36–41, 43, and 47–52 of the '228 patent on the ground of obviousness over Admitted Prior Art ("APA") and Boer.

II. ANALYSIS

A. Claim Interpretation

In an *inter partes* review, the Board construes claim terms in an unexpired patent using their broadest reasonable construction in light of the specification of the patent in which they appear. 37 C.F.R. § 42.100(b); *In re Cuozzo Speed Techs., LLC*, 793 F.3d 1268, 1275–79 (Fed. Cir. 2015). The claim language should be read in light of the specification as it would be interpreted by one of ordinary skill in the art. *In re Am. Acad. of Sci. Tech. Ctr.*, 367 F.3d 1359, 1364 (Fed. Cir. 2004). The Office must apply the broadest reasonable meaning to the claim language, taking into account any definitions presented in the specification. *Id.* (citing *In re Bass*, 314 F.3d 575, 577 (Fed. Cir. 2002)). The "ordinary and customary meaning" is that which the term would have to a person of ordinary skill in the art in

Rembrandt Wireless
Ex. 2012
Apple Inc. v. Rembrandt Wireless Technologies, LP, IPR2020-00033
Page 560

question. *In re Translogic Tech., Inc.*, 504 F.3d 1249, 1257 (Fed. Cir. 2007).

1. Modulation Methods

Illustrative claim 26 recites a transceiver configured to transmit signals "using at least two different types of modulation methods . . . ."

Petitioner submits that the ordinary meaning of "modulation" is "[t]he process by which some characteristic of a carrier is varied in accordance with a modulating wave." Pet. 14 (citing Ex. 1526[2] ¶¶ 82–88 (Declaration of Dr. David Goodman); Ex. 1520 (technical dictionary)). Patent Owner submits that "modulation method" is generally recognized in the pertinent art to mean "a technique for varying one or more characteristics of a carrier wave in a predetermined manner to convey information." PO Resp. 9. Patent Owner submits further, and we agree, that there appears to be no significant difference between these two proffered constructions of "modulation." *Id.* at 11.

Later in its Patent Owner Response, however, Patent Owner advocates a narrower definition for "modulation method" for the purpose of addressing the prior art. *See id.* at 13. In particular, Patent Owner submits that the only three characteristics of a carrier wave are frequency, phase, and amplitude and, thus, "modulation" is limited to varying one or more of the frequency, phase, and amplitude of the carrier wave. *Id.* Patent Owner relies on the Declaration of Dr. Christopher R. Jones (Ex. 2914 ¶ 40). Dr. Jones, in turn, relies on a definition in one of several technical dictionaries that have been

[2] Petitioners erroneously refer to the Declaration of Dr. David Goodman as Exhibit 1523 throughout the Petition, but Dr. Goodman's declaration was submitted as Exhibit 1526.

provided by Patent Owner. Ex. 2914 ¶ 39. In the particular technical dictionary upon which Dr. Jones relies,[3] two of the six definitions of "modulation" use the terms amplitude, frequency, and phase. Ex. 2915, 3. The entry contains broader definitions for "modulation," as, for example, the first definition, which states that modulation is the process of varying some characteristic of a carrier wave, whereby the carrier wave can be a direct current, an alternating current, or "a series of regularly repeating, uniform pulses called a pulse chain." *Id.*

Patent Owner does not point to anything in the '228 patent's disclosure that would limit the definition of "modulation" to varying the amplitude, frequency, or phase of the carrier wave. Our reviewing court has "cautioned against relying on dictionary definitions at the expense of a fair reading of the claims, which must be understood in light of the specification." *Interval Licensing LLC v. AOL, Inc.*, 766 F.3d 1364, 1377 (Fed. Cir. 2014). We, therefore, interpret "modulation" in accordance with its customary and ordinary meaning as the process by which some characteristic of a carrier is varied in accordance with a modulating wave.

2. Types of Modulation Methods

As we have noted, the claims recite "types" of modulation methods. Petitioner and Patent Owner disagree with respect to the meaning of a "type" of modulation method. Patent Owner submits that the broadest reasonable interpretation of different "types" of modulation methods does not extend to modulation methods that are known merely to be incompatible with each other, but is limited to different "families" of modulation techniques, e.g.,

[3] Rudolf F. Graf, MODERN DICTIONARY OF ELECTRONICS, 6th ed. (1997).

the FSK (frequency shift keying) "family" of modulation methods and the QAM (quadrature amplitude modulation) "family" of modulation methods. PO Resp. 12. Petitioner, on the other hand, contends that the broadest reasonable interpretation of a different "type" of modulation method means an "incompatible" modulation method. Pet. 9–14.

Patent Owner contends that a "special definition" was provided during prosecution of the '228 patent, which defined the term different "types" of modulation to mean different "families" of modulation. PO Resp. 12. At the outset, we agree with Petitioner (Pet. Reply 16) to the extent that prosecution history is entitled to little weight under the broadest reasonable interpretation standard. *See Tempo Lighting, Inc. v. Tivoli, LLC*, 742 F.3d 973, 978 (Fed. Cir. 2014) ("This court also observes that the PTO is under no obligation to accept a claim construction proffered as a prosecution history disclaimer, which generally only binds the patent owner."). In any event, Patent Owner relies on the following statements during prosecution for the asserted "special definition":

> Applicant thanks [the Examiner] for the indication that claims 1-18, and 37-57 are allowed (office action, p. 7). Applicant has further amended claims 1-2, 9-15, 18, 37-38, and 45-46 with additional recitations to more precisely claim the subject-matter. For example, the language of independent claim 1 has been clarified to refer to two *types* of modulation methods, *i.e.*, different families of modulation techniques, such as the FSK family of modulation methods and the QAM family of modulation methods.

Ex. 1518, 20 (Reply Pursuant to 37 CFR § 1.111 in parent application 12/543,910).

Rembrandt Wireless
Ex. 2012
Apple Inc. v. Rembrandt Wireless Technologies, LP, IPR2020-00033
Page 563
IPR2020-00036 Page 00563
368

As made plain in the above remarks, the claim amendments with respect to two "types" of modulation methods were not made in response to a rejection, as the relevant claims had been allowed. *Cf. Tempo Lighting*, 742 F.3d at 978 ("[I]n this instance, the PTO itself requested Tivoli rewrite the 'non-photoluminescent' limitation in positive terms. Tivoli complied, and then supplied clarification about the meaning of the 'inert to light.'"). Nor do the above remarks explain what a "family" might be, or why FSK is considered to be member of one "family" and QAM a member of another "family." "Although an inventor is indeed free to define the specific terms used to describe his or her invention, this must be done with reasonable clarity, deliberateness, and precision." *In re Paulsen*, 30 F.3d 1475, 1480 (Fed. Cir. 1994). Patent Owner's purported "definition" is anything but clear or precise. Further, the only modulation methods named in the text of the '228 patent are QAM, carrierless amplitude and phase (CAP) modulation,[4] and discrete multitone (DMT) modulation, each of which the patent calls "high performance modulation." *See, e.g.*, Ex. 1501, 2:3–7.

Patent Owner provides, as an exhibit, Provisional Application No. 60/067,562 (Ex. 2901), which the '228 patent purports to incorporate by reference (Ex. 1501, 1:8–17). That provisional distinguishes between "high performance modulation, such as QAM, CAP, or DMT," which are optimized for high performance, and "low performance modulation, such as FSK, PAM or DSB," which may be implemented in much less expensive

[4] According to Patent Owner, the patent contains a typographical error in that "[c]arrier" should be "[c]arrierless." PO Resp. 10 n.3.

devices. Ex. 2901, 4.[5] An objective reading of the above-noted remarks during prosecution suggests that, contrary to Patent Owner's arguments, the "different families of modulation techniques" refer to high performance modulation (such as QAM) and low performance modulation (such as FSK). The prosecution history is, at best, ambiguous. "It is inappropriate to limit a broad definition of a claim term based on prosecution history that is itself ambiguous." *Inverness Med. Switz. GmbH v. Warner Lambert Co.*, 309 F.3d 1373, 1382 (Fed. Cir. 2002).

Moreover, Patent Owner's proffered construction (*e.g.*, PO Resp. 13) of "types" of modulation methods being based on "one or more" of the carrier wave's frequency, phase, and amplitude "families" is, itself, ambiguous. We reproduce the following exchange during oral argument in related case IPR2014-00518, which concerns U.S. Patent No. 8,023,580 B2 (which issued from the parent application (12/543,910) of the '228 patent):

> JUDGE LEE: How do you summarize your position? What is the definition of different family?
>
> MR. MOLLAAGHABABA: Okay. I believe these three characteristics, phase, amplitude and frequency of the carrier wave, define these three families.
>
> Now, if two methods are using the same characteristic to modulate the wave, then they are not different types. I mean, DBPSK and DQPSK, they both use the phase, that characteristic of the carrier wave to modulate and convey information.

[5] The first page of Exhibit 2901 is unnumbered, and page 4 is numbered as page 3. *Cf.* 37 C.F.R. § 42.63(d)((2)(i) ("Each page must be uniquely numbered in sequence.").

Rembrandt Wireless
Ex. 2012
Apple Inc. v. Rembrandt Wireless Technologies, LP, IPR2020-00033
Page 565

JUDGE LEE: Okay. So phase is one family, amplitude is one, and frequency is another. So those are broad categories.

MR. MOLLAAGHABABA: Yes.

JUDGE LEE: So you can only have three types then.

MR. MOLLAAGHABABA: But you can have situations where the modulation can belong to two categories.

I mean, there are some intersections. QAM modulates both amplitude and phase.

JUDGE LEE: So to which family would they belong?

MR. MOLLAAGHABABA: Well, they are part of both families. I mean, they belong to two -- both families. There is some intersections where some modulation techniques use more than one characteristic. They use two characteristics.

JUDGE LEE: Then are they of different types? If there is just only partial overlap, are they still different types, or is it the same type because they also share something in common?

MR. MOLLAAGHABABA: Yes, our contention is that they are not of different types. They are different in the sense that they are different methods, like QAM and PSK, but they share a family so, therefore, they are not different types. They share the family for both.

IPR2014-00518, Paper 46 at 88:8–89:17. Thus, according to counsel for Patent Owner, two modulation methods that are different in one characteristic but the same in another, e.g., one varying phase and amplitude and the other varying frequency and amplitude, would be regarded as belonging in the same family. Such an understanding of the classification or categorization of "family" in case of partial overlap was not a part of any

representation during prosecution history. It reflects ambiguity in the construction proposed by Patent Owner.

The '228 patent describes Type A and Type B modulation methods (and tributary modems, or "tribs"), but does not associate directly any particular modulation method with a Type A or a Type B method (or "trib"). *See, e.g.*, Ex. 1501, 5:47–7:33. The provisional application, however, associates lower-cost FSK modems with Type B "tribs." Ex. 2901, 6; *see also* '228 patent —

> While it is possible to use high performance tribs running state of the art modulation methods such as QAM, CAP, or DMT to implement both the high and low data rate applications, significant cost savings can be achieved if lower cost tribs using low performance modulation methods are used to implement the lower data rate applications.

Ex. 1501, 5:41–46.

Further, the '228 patent does not draw distinctions between "families" of modulation techniques directed to differences in modulation with respect to amplitude, phase, or frequency. Rather, the '228 patent draws distinctions between relatively expensive high performance techniques and relatively inexpensive low performance techniques. The '228 patent attempts to remedy the asserted deficiency in the prior art that all modems in a system must use a single modulation method, and thus must all be high-performance modems, with the high-performance, relatively expensive modems merely lowering the data rate for lower data-rate applications. As the '228 patent explains:

> All users in the system will generally have to be equipped with a high performance modem to ensure modulation compatibility. These state of the art modems are then run at their lowest data

Rembrandt Wireless
Ex. 2012
Apple Inc. v. Rembrandt Wireless Technologies, LP, IPR2020-00033
Page 567

> rates for those applications that require relatively low data throughput performance. The replacement of inexpensive modems with much more expensive state of the art devices due to modulation compatibility imposes a substantial cost that is unnecessary in terms of the service and performance to be delivered to the end user.

Ex. 1501, 2:10–18.

Further, the '228 patent refers to an objective of using multiple modulation methods to facilitate communication among a plurality of modems in a network, which have heretofore been "incompatible." *Id.* at 2:19–23.

In view of the foregoing, we do not interpret a "type" of modulation method as referring to some vague or undefined "family" of modulation methods. We interpret different "types" of modulation methods as modulation methods that are incompatible with one another. Thus, contrary to Patent Owner's construction, two modulation methods that are based on varying the same one of the frequency, amplitude, or phase of the carrier wave may be different "types" of modulation methods.

B. Prior Art

1. Admitted Prior Art

Petitioner contends that the '228 patent's disclosure of polled multipoint communications using masters and slaves, depicted in Figures 1 and 2 and described in column 3, line 64 through column 5, line 7, and the '228 patent's disclosure of training signals, data fields, and trailing signals in such a multipoint communication system, described within that disclosure at column 4, lines 5 through 19, constitute material that may be used as prior art against the patent under 35 U.S.C. § 103(a). We agree. Figure 1 of the

Rembrandt Wireless
Ex. 2012
Apple Inc. v. Rembrandt Wireless Technologies, LP, IPR2020-00033
Page 568

patent is labeled as "Prior Art." Pet. 5; Ex. 1501, Fig. 1. Moreover, the '228 patent's specification refers to "prior art" multipoint communication system 22 comprising master modem or transceiver 24, which communicates with a plurality of tributary modems ("tribs") or transceivers 26. Pet. 5–6; Ex. 1501, 3:64–4:1. Further, the '228 patent describes Figure 2 as illustrating the operation of the multipoint communication system of (prior art) Figure 1. Pet. 7; Ex. 1501, 3:33–34.

2. Boer

Boer describes a wireless LAN that includes first stations that operate at 1 or 2 Mbps (Megabits per second) data rate and second stations that operate at 1, 2, 5, or 8 Mbps data rate. Ex. 1504, Abstract.

Figure 1 of Boer is reproduced below.

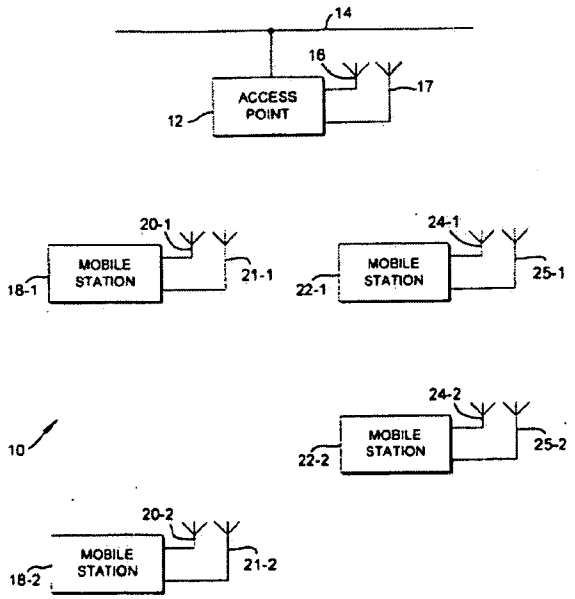

FIG.1

Figure 1 is said to be a block diagram of a wireless LAN embodying Boer's invention. Ex. 1504, 1:53–54. LAN 10 includes access point 12,

serving as a base station. *Id.* at 2:6–9. The network includes mobile stations 18-1 and 18-2 that are capable of transmitting and receiving messages at a data rate of 1 or 2 Mbps using DSSS (direct sequence spread spectrum) coding. *Id.* at 2:16–22. When operating at 1 Mbps, a station uses DBPSK (differential binary phase shift keying) modulation. *Id.* at 2:23–25. When operating at 2 Mbps, a station uses DQPSK (differential quadrature phase shift keying) modulation. *Id.* at 2:25–27. Mobile stations 22-1 and 22-2 are capable of operating at the 1 and 2 Mbps data rates using the same modulation and coding as stations 181 and 182. *Id.* at 2:34–39. In addition, stations 22-1 and 22-2 can operate at 5 and 8 Mbps data rates using PPM/DQPSK (pulse position modulation–differential quadrature phase shift keying) in combination with the DSSS coding. *Id.* at 2:39–44.

C. Claims 26–29, 31, 36–41, 43, and 47–52 – APA and Boer

1. Asserted Ground

Petitioner applies the teachings of APA and Boer to demonstrate obviousness of the subject matter of illustrative claim 26, relying on APA for teaching of master/slave communication systems. Pet. 16–34. Petitioner submits that a person having ordinary skill in the art have would been motivated to combine Boer with APA, referring to the Declaration of Dr. David Goodman (Ex. 1526 ¶¶ 112–116, 120–122, 124–127). *Id.* at 19–21.

Dr. Goodman testifies that polled multiport master/slave communications systems were well known to those of ordinary skill in the art for simplicity and determinacy, referring to Exhibit 1522. Ex. 1526 ¶ 124. Petitioner submits Exhibit 1522 as a November 1994 publication that compares various strengths and weaknesses for communication protocols for

Rembrandt Wireless
Ex. 2012
Apple Inc. v. Rembrandt Wireless Technologies, LP, IPR2020-00033
Page 570

embedded systems. Ex. 1522, 7. The document states that polling is one of the more popular protocols for embedded systems "because of its simplicity and determinacy." *Id.* In that protocol, a centrally assigned master periodically sends a polling message to the slave nodes, giving them explicit permission to transmit on the network. *Id.* The protocol "is ideal for a centralized data-acquisition system where peer-to-peer communication and global prioritization are not required." *Id.*

2. Motivation to Combine

Patent Owner in its Response argues that Upender does not reflect a proper motivation from the prior art for the proffered combination of Boer and APA. Patent Owner submits a Declaration from a co-author of Upender to show that the article did not suggest the use of a master/slave communication system. Ex. 2908 (Declaration of Dr. Philip Koopman).

We have considered Patent Owner's arguments and evidence but find that the clear teachings in Upender are not diminished or rebutted. Upender investigates tradeoffs in different communication protocols. The article concludes that CSMA/CA (carrier sense multiple access with collision avoidance), or RCSMA (reservation CSMA), is a good choice for some embedded systems. Ex. 1522, 10–11. The article also indicates that polling may not provide sufficient flexibility for "advanced systems," classifying polling as "simple," but noting that the discussion of the different protocol strengths and weaknesses "should allow you to select the best protocol to match your needs." *Id.* In fact, Dr. Koopman admits that there are some systems for which master/slave is a better match for the design requirements. Pet. Reply 10; Ex. 1527, 40:2–20.

That Upender may identify some advantages of CSMA/CA over a master/slave protocol is not a "teaching away" from the master/slave protocol. Upender teaches that master/slave protocols were widely used and a good choice for simple systems. *See In re Gurley*, 27 F.3d 551, 553 (Fed. Cir. 1994) ("[A] person seeking to improve the art of flexible circuit boards, on learning from [a reference] that epoxy was inferior to polyester-imide resins, might well be led to search beyond epoxy for improved products. However, [the reference] also teaches that epoxy is usable and has been used for Gurley's purpose.").

Patent Owner's position appears to be that the prior art teaches that one and only one communication protocol should ever be used, which is directly contrary to the clear teachings of Upender. In view of Upender, one of ordinary skill in the art would have found it obvious to use a different prior art communication protocol (e.g., a simpler protocol) when using multiple data rates as described by Boer.

Further, we agree with Petitioner that Boer does not describe CSMA as central to an alleged goal of seeking a "reduction of overhead-in-time per transmission," but relates that reduction to the use of short acknowledgment (ACK) messages. PO Resp. 42–43; Pet. Reply 12; Ex. 1504, 8:16–29.

Patent Owner submits that Dr. Goodman's Declaration (Ex. 1526) is unreliable because it is unclear what level of skill it attributes to the ordinary artisan. PO Resp. 33–34. The alleged lack of clarity, however, does not affect the outcome. We note that specifying the level of ordinary skill in terms of an academic degree in a field of study and the number of years of practical working experience is generally unhelpful, as a practical matter, because it does not convey whether one with ordinary skill in the art would

Rembrandt Wireless
Ex. 2012
Apple Inc. v. Rembrandt Wireless Technologies, LP, IPR2020-00033
Page 572

have been aware of anything specific or particular. Patent Owner has not directed us to evidence establishing what someone who has earned a certain degree or who has a certain number of years of experience necessarily knows. It is not always necessary, however, to have an express proposition on the level of ordinary skill in the art. The level of ordinary skill in the art may be reflected by the prior art of record. *See Okajima v. Bourdeau*, 261 F.3d 1350, 1355 (Fed. Cir. 2001); *In re GPAC Inc.*, 57 F.3d 1573, 1579 (Fed. Cir. 1995); *In re Oelrich*, 579 F.2d 86, 91 (CCPA 1978).

We agree with Patent Owner to the extent that one of skill in the art would not consider using a CSMA/CA protocol in a master/slave configuration. PO Resp. 39–41. That combination, however, is not contemplated by the asserted ground of unpatentability. As Patent Owner and Dr. Koopman recognize, the transmitted data used in Boer to effect the CSMCA/CA protocol would be "totally unnecessary" in a master/slave configuration. *Id.* at 46; Ex. 2908 ¶ 96.

3. Different Types of Modulation Methods

Illustrative claim 26 recites "using at least two different types of modulation methods . . . comprising a first modulation method and a second modulation method." Petitioner contends that Boer's DBPSK modulation corresponds to the claimed "first" modulation method. *E.g.,* Pet. 23. Petitioner submits that either of Boer's DQPSK modulation and PPM/DQPSK modulation corresponds to the claimed "second" modulation method because each of DQPSK modulation and PPM/DQPSK modulation is of a different type — i.e., not compatible with — DBPSK modulation. Pet. 23–25; Ex. 1526 ¶¶ 128–136. On the record before us, we agree that

Rembrandt Wireless
Ex. 2012
Apple Inc. v. Rembrandt Wireless Technologies, LP, IPR2020-00033
Page 573

DQPSK and PPM/DQPSK modulation methods are incompatible with DBPSK modulation. *See, e.g.,* Ex. 1526 ¶¶ 147–154.

Patent Owner responds, however, that neither of DQPSK and PPM/DQPSK can be considered a modulation method of a type different from DBPSK. PO Resp. 46–55. Patent Owner argues that DBPSK and DQPSK are not different "types" of modulation methods because the methods are within the same "family," because both vary the same fundamental characteristic of a carrier wave — its phase. *Id.* at 49–50. We do not find Patent Owner's argument to be persuasive because we are not convinced that the broadest reasonable interpretation of "types" of modulation is so limited. *See* Claim Interpretation, § II.A.2, *supra*.

Patent Owner alleges also that Boer does not describe DBPSK and DQPSK as "incompatible" modulation methods because mobile stations are disclosed as capable of transmitting and receiving using DBPSK and also using DQPSK. PO Resp. 48–49. However, whether one "type" of modulation is incompatible with another "type" concerns the method of modulation, not necessarily the modem for carrying out that method. That is, a modem might be designed (as in Boer) to transmit and receive using, separately, two incompatible modulation methods, but that does not mean the two modulation methods are compatible with each other.

Moreover, Boer describes PPM/DQPSK modulation, which falls within the meaning of a "different type" of modulation method, with respect to DBPSK, under our construction of the term. *Cf.* Ex. 1526 ¶ 149 ("Regardless of which construction the panel adopts for type of modulation method both 5 Mbps and 8 Mbps PPM/DQPSK meet the 'second modulation method' claim limitation."). According to Dr. Goodman, phase

Rembrandt Wireless
Ex. 2012
Apple Inc. v. Rembrandt Wireless Technologies, LP, IPR2020-00033
Page 574
IPR2020-00036 Page 00574
379

is not used in PPM, unlike in DBPSK and DQPSK modulation. *Id.* ¶ 151. In PPM, the start and stop time of a transmission is varied in response to the information to be transmitted, with the time shift being indicative of data bits. *Id.*

Patent Owner argues that PPM as used in Boer is not a modulation method. PO Resp. 50–55. Patent Owner's position, however, is based on the argument that a "modulation method" is limited to varying one or more of the "fundamental characteristics" of amplitude, frequency, and phase. We do not find the argument persuasive, in view of the requirement of construing the term in accordance with its broadest reasonable interpretation. *See* § II.A.1, *supra*. We acknowledge that Boer refers to PPM as "PPM type coding." PO Resp. 53–54; Ex. 1504, 4:45–48. However, as pointed out by Petitioner, Boer appears to use the terms "coding" and "modulation" interchangeably. Pet. Reply 22–23.

Moreover, Dr. Jones' Declaration is unclear in what is meant by PPM being not a carrier wave modulation technique "as utilized in Boer" or "within the context of Boer." Ex. 2914 ¶ 58. Dr. Jones submits that he holds numerous patents in types of modulation that include pulse-amplitude modulation (PAM). *Id.* ¶ 7. Patent Owner provides, as an exhibit, a technical treatise on communication systems engineering[6] that addresses PAM and PPM as two types of "Pulse Modulation Signals." Ex. 2905, 438–44 (original page numbering). In PAM, "the information is conveyed by the amplitude of the pulse." *Id.* at 438. In PPM (consistent with Dr. Goodman's

[6] John G. Proakis and Masoud Salehi, *Communication Systems Engineering*, Prentice Hall, Digital Transmission Though and AWGN Channel, Chap. 7, 438–44 (1994).

testimony (Ex. 1526 ¶ 150)), "the information is conveyed by the time interval in which the pulse is transmitted." Ex. 2905, 439.

With respect to whether PPM can be considered a modulation method, we credit the testimony of Petitioner's witness, Dr. Goodman, over that of Patent Owner's, Dr. Jones, for the additional reason that the term "modulation" is part of the descriptive name for PPM – pulse position *modulation*. Patent Owner has not explained sufficiently why pulse position *modulation* cannot be considered a *modulation* method. Although DBPSK and PPM/DQPSK may both vary the "phase" characteristic of the carrier wave, we are persuaded that with PPM the timing (start and stop time) of the transmission is another characteristic of the carrier wave that is varied. Pet. Reply 20–21; PO Resp. 52–54 (both parties referencing testimony of Dr. Goodman); § II.A.1 *supra*. We disagree with Patent Owner's characterization of Dr. Goodman's deposition testimony as Dr. Goodman admitting "that selection of time slots does not alter the underlying carrier wave." PO Resp. 53. Dr. Goodman stated that "the selection of the timing wouldn't alter the *amplitude, the phase or the frequency* of that underlying sine wave." *Id.* (quoting Ex. 2911, 31:20–23) (emphasis added). Further, Patent Owner has not submitted sufficient evidence to show that "Dr. Goodman also agreed the PPM encoding is independent of the underlying modulated wave transmitted in the particular time slots." PO Resp. 53.

4. Trailing Signals

Dependent claim 51 further recites that "the master communication device is configured to transmit a trailing signal to complete the master communication transmission." Petitioner argues that APA teaches trailing

Rembrandt Wireless
Ex. 2012
Apple Inc. v. Rembrandt Wireless Technologies, LP, IPR2020-00033
Page 576
IPR2020-00036 Page 00576
381

signals. Pet. 54–56; Pet. Reply 23–24; Ex. 1501, 3:64–4:25. We agree. Patent Owner argues in its Response that the CRC bits in Boer do not meet the recited trailing signal (PO Resp. 58) and, further, that "there would be no need to incorporate a trailing signal into the message 200 of Boer," because Boer provides a header that includes a length field. *Id.* at 60. Patent Owner's arguments address Petitioner's argument, asserted in the Petition but not relied upon in this Decision, that trailing signals are taught by Boer. Patent Owner's arguments do not address the assertion that the trailing signals are already present in APA. Specifically, as Petitioner points out in its Reply, Patent Owner does not address the proposed incorporation of multiple modulation methods, taught by Boer, into the multipoint communication system (including training and trailing signals), taught by APA, , which results in a combination having all of the limitations recited by and as arranged in claim 51. Pet. Reply 23–24; *see* Pet. 23–26, 56; Paper 43, 20–21.

5. APA and Boer — Conclusion

Upon review of the Petition and supporting evidence, as well as the Patent Owner Response and supporting evidence, we conclude that Petitioner has demonstrated, by a preponderance of the evidence, that claims 26–29, 31, 36–41, 43, and 47–52 are unpatentable for obviousness over APA and Boer.

6. Patent Owner's Motion to Exclude

Patent Owner moves to exclude, under 37 C.F.R. § 42.64(c), Exhibits 1529, 1542, 1543, and 1544. Paper 34. Patent Owner submits that Exhibits 1529 and 1542 are irrelevant and constitute improper character evidence

against Patent Owner's expert Dr. Koopman. However, we do not discredit Dr. Koopman's testimony based on anything contained in Exhibits 1529 and 1542. Nor do we rely on Exhibits 1543 and 1545, which were submitted by Petitioner as further evidence to show that PPM is a modulation method. Accordingly, Patent Owner's motion to exclude is *dismissed* as moot.

III. CONCLUSION

Petitioner has demonstrated by a preponderance of the evidence that claims 26–29, 31, 36–41, 43, and 47–52 are unpatentable for obviousness over APA and Boer.

IV. ORDER

In consideration of the foregoing, it is

ORDERED that claims 26–29, 31, 36–41, 43, and 47–52 of the '228 patent are *unpatentable*; and

FURTHER ORDERED that Patent Owner's motion to exclude evidence is *dismissed*; and

FURTHER ORDERED that, because this is a final written decision, parties to the proceeding seeking judicial review of the decision must comply with the notice and service requirements of 37 C.F.R. § 90.2.

For Petitioner:

J. Steven Baughman
Gabrielle E. Higgins
ROPES & GRAY LLP
steven.baughman@ropesgray.com
gabrielle.higgins@ropesgray.com

Daniel G. Cardy
DICKSTEIN SHAPIRO LLP
cardyd@dicksteinshapiro.com

For Patent Owner:

Thomas Engellenner
Reza Mollaaghababa
David Magee
PEPPER HAMILTON LLP
engellennert@pepperlaw.com
mollaagababar@pepperlaw.com
mageed@pepperlaw.com

Nancy Linck
ROTHWELL, FIGG, ERNST, & MANBECK, P.C.
nlinck@rothwellfigg.com

Exhibit D

US005982807A

United States Patent [19]

Snell

[11] **Patent Number: 5,982,807**

[45] **Date of Patent: Nov. 9, 1999**

[54] **HIGH DATA RATE SPREAD SPECTRUM TRANSCEIVER AND ASSOCIATED METHODS**

[75] Inventor: **James Leroy Snell**, Palm Bay, Fla.

[73] Assignee: **Harris Corporation**, Palm Bay, Fla.

[21] Appl. No.: **08/819,846**

[22] Filed: **Mar. 17, 1997**

[51] **Int. Cl.**[6] **H04B 15/00**

[52] **U.S. Cl.** **375/200**; 375/205; 375/206; 375/208; 375/209

[58] **Field of Search** 375/200, 205, 375/206, 208, 209, 210, 279, 280

[56] **References Cited**

U.S. PATENT DOCUMENTS

4,626,796	12/1986	Elder	331/1 A
5,103,459	4/1992	Gilhousen et al.	375/1
5,309,474	5/1994	Gilhousen et al.	375/1
5,367,516	11/1994	Miller	370/19
5,416,797	5/1995	Gilhousen et al.	375/705
5,497,395	3/1996	Jou	375/205
5,515,396	5/1996	Dalekotzin	375/206
5,535,329	7/1996	Padovani et al.	375/205
5,577,025	11/1996	Skinner et al.	370/22
5,598,154	1/1997	Wilson et al.	341/50
5,621,752	4/1997	Antonio et al.	375/200
5,659,573	8/1997	Bruckert et al.	375/200
5,682,404	10/1997	Miller	375/222
5,790,534	8/1998	Kokko et al.	370/335

OTHER PUBLICATIONS

Harris Corporation Application Note entitled "Harris PRISM Chip Set", No. AN9614, Mar. 1996.

Harris Corporation, "PRISM 2.4 GHz Chip Set", File No. 4063.4, Oct. 1996.

Harris Corporation Tech Brief entitled "A Brief Tutorial on Spread Spectrum and Packet Radio", No. TB337.1, May 1996.

Harris Corporation, "Direct Sequence Spread Spectrum Baseband Processor", File No. 4064.4, Oct. 1996.

Primary Examiner—Stephen Chin

Assistant Examiner—Mohammad Ghaydur

Attorney, Agent, or Firm—Allen, Dyer, Doppelt, Milbrath & Gilchrist, P.A.

[57] **ABSTRACT**

A spread spectrum radio transceiver includes a high data rate baseband processor and a radio circuit connected thereto. The baseband processor preferably includes a modulator for spread spectrum phase shift keying (PSK) modulating information for transmission via the radio circuit. The modulator may include at least one modified Walsh code function encoder for encoding information according to a modified Walsh code for substantially reducing an average DC signal component to thereby enhance overall system performance when AC-coupling the received signal through at least one analog-to-digital converter to the demodulator. The demodulator is for spread spectrum PSK demodulating information received from the radio circuit. The modulator and demodulator are each preferably operable in one of a bi-phase PSK (BPSK) mode at a first data rate and a quadrature PSK (QPSK) mode at a second data rate. These formats may also be switched on-the-fly in the demodulator. Method aspects are also disclosed.

61 Claims, 8 Drawing Sheets

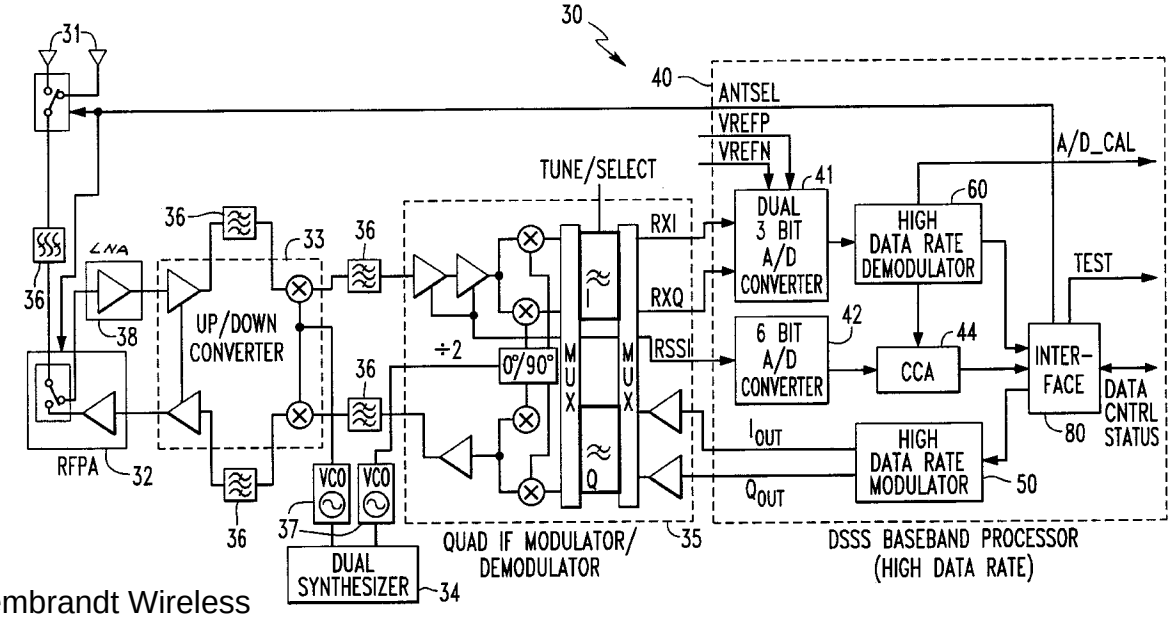

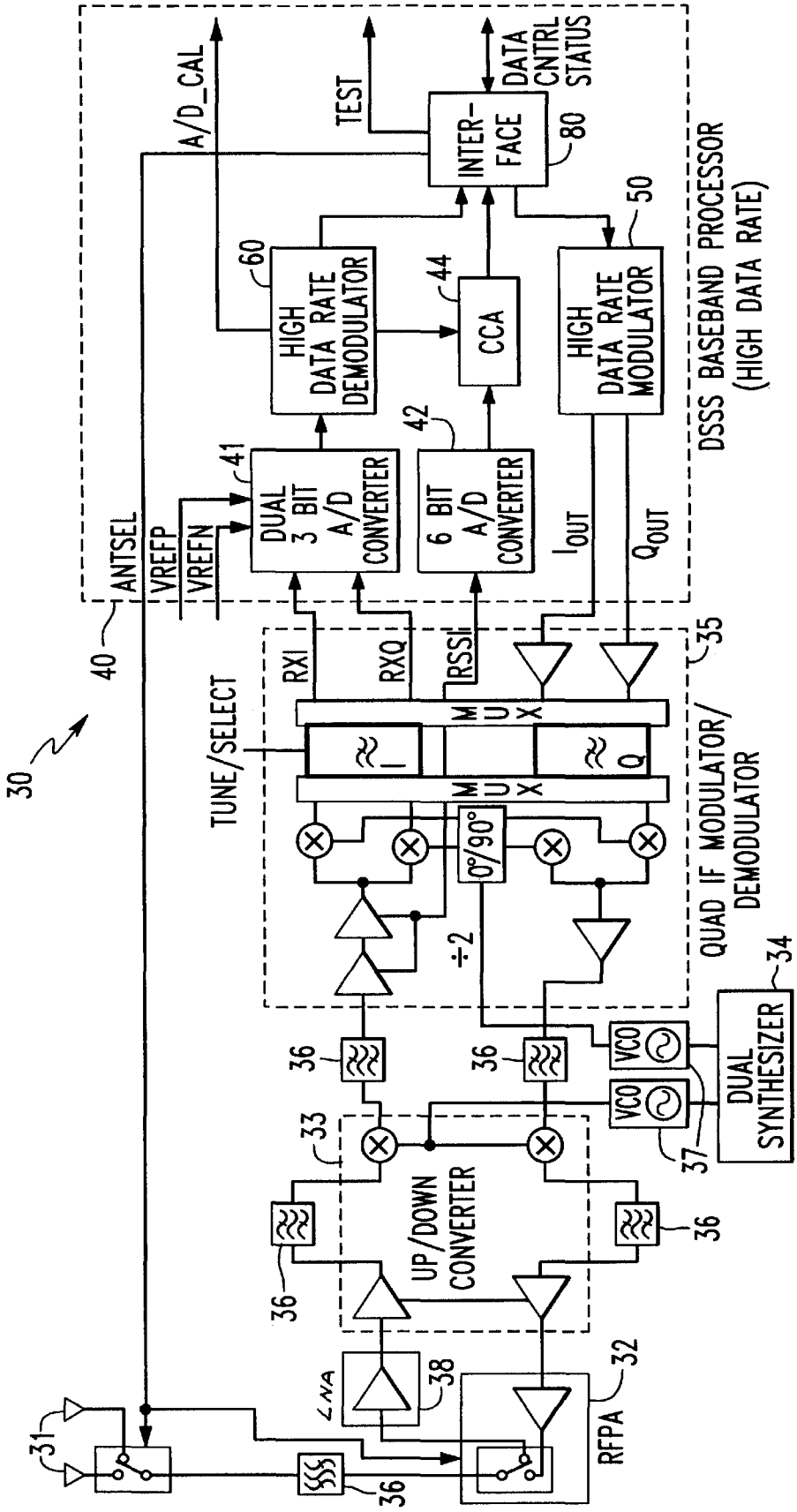
A/D_CAL
TEST
DATA
CNTRL
STATUS
INTER-
FACE
80
50
60
HIGH
DATA RATE
DEMODULATOR
44
CCA
HIGH
DATA RATE
MODULATOR
DSSS BASEBAND PROCESSOR
(HIGH DATA RATE)
42
41
DUAL
3 BIT
A/D
CONVERTER
6 BIT
A/D
CONVERTER
ANTSEL
VREFP
VREFN
I_{OUT}
Q_{OUT}
40
30
35
RXI
RXQ
RSSI
TUNE/SELECT
MUX
MUX
0°/90°
÷2
QUAD IF MODULATOR/
DEMODULATOR
34
DUAL
SYNTHESIZER
VCO
VCO
37
36
33
UP/DOWN
CONVERTER
LNA
38
32
RFPA
31

FIG. 1

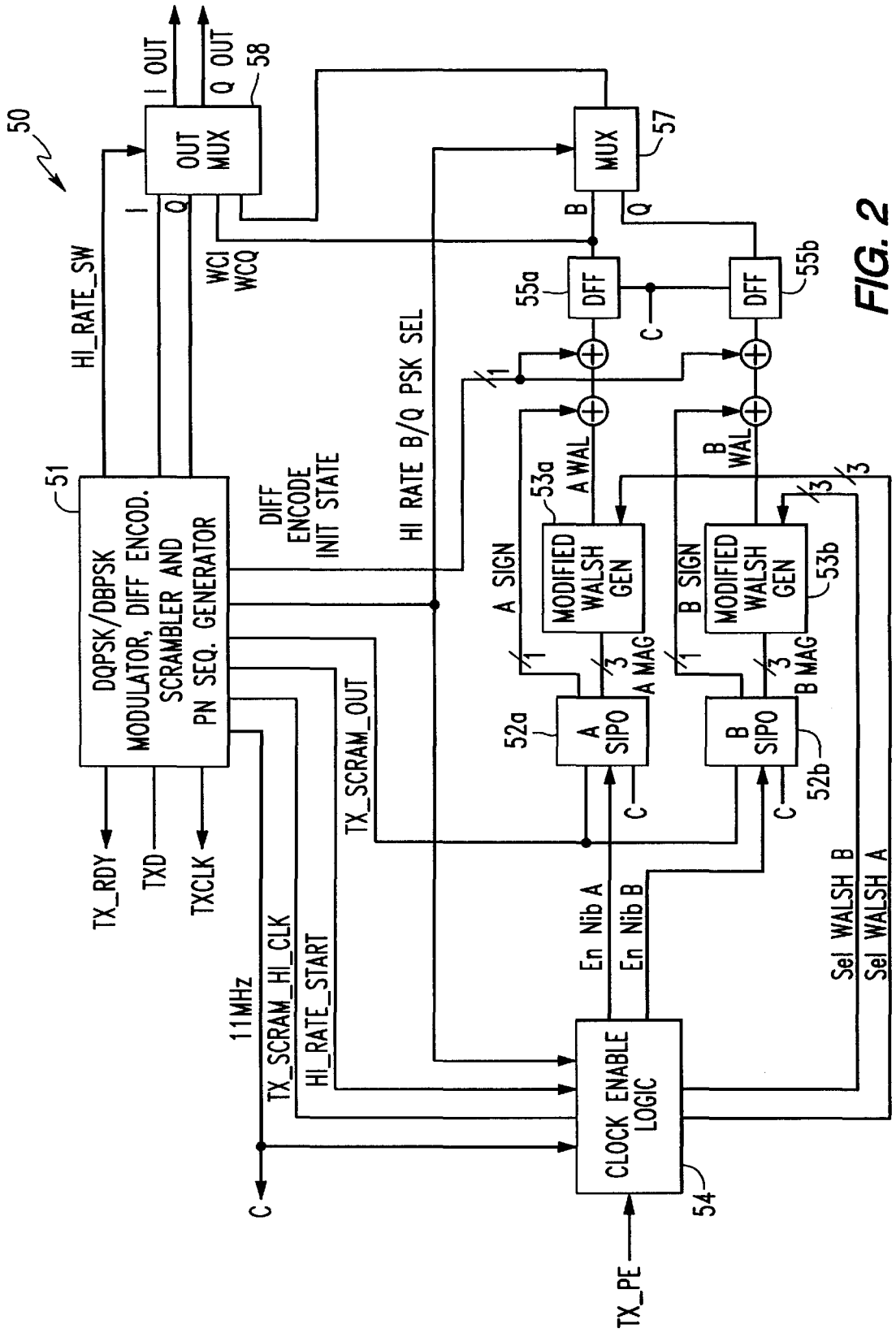
50
51
52a
52b
53a
53b
54
55a
55b
57
58
I OUT
Q OUT
OUT MUX
MUX
DFF
DFF
HI_RATE_SW
WCI
WCQ
DQPSK/DBPSK MODULATOR, DIFF ENCOD. SCRAMBLER AND PN SEQ. GENERATOR
DIFF ENCODE INIT STATE
HI RATE B/Q PSK SEL
A SIGN
A WAL
MODIFIED WALSH GEN
A MAG
A SIPO
B SIGN
B WAL
MODIFIED WALSH GEN
B MAG
B SIPO
TX_SCRAM_OUT
TX_RDY
TXD
TXCLK
11MHz
TX_SCRAM_HI_CLK
HI_RATE_START
En Nib A
En Nib B
Sel WALSH B
Sel WALSH A
CLOCK ENABLE LOGIC
TX_PE

FIG. 2

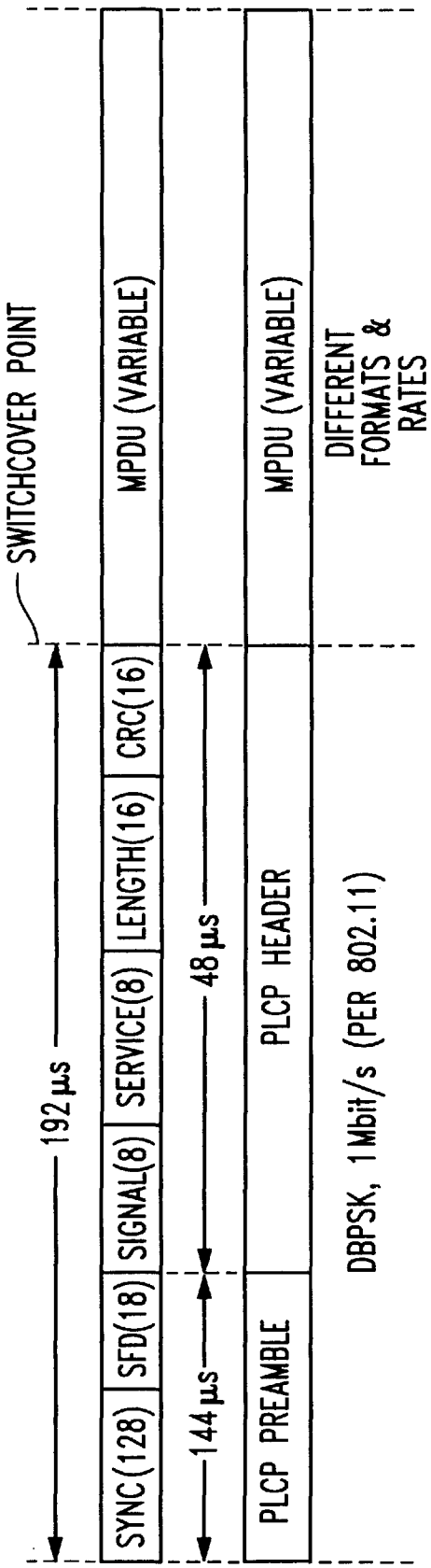
SWITCHCOVER POINT
192 µs
SYNC(128)
SFD(18)
SIGNAL(8)
SERVICE(8)
LENGTH(16)
CRC(16)
MPDU (VARIABLE)
144 µs
48 µs
PLCP PREAMBLE
PLCP HEADER
MPDU (VARIABLE)
DBPSK, 1 Mbit/s (PER 802.11)
DIFFERENT FORMATS & RATES

FIG. 3

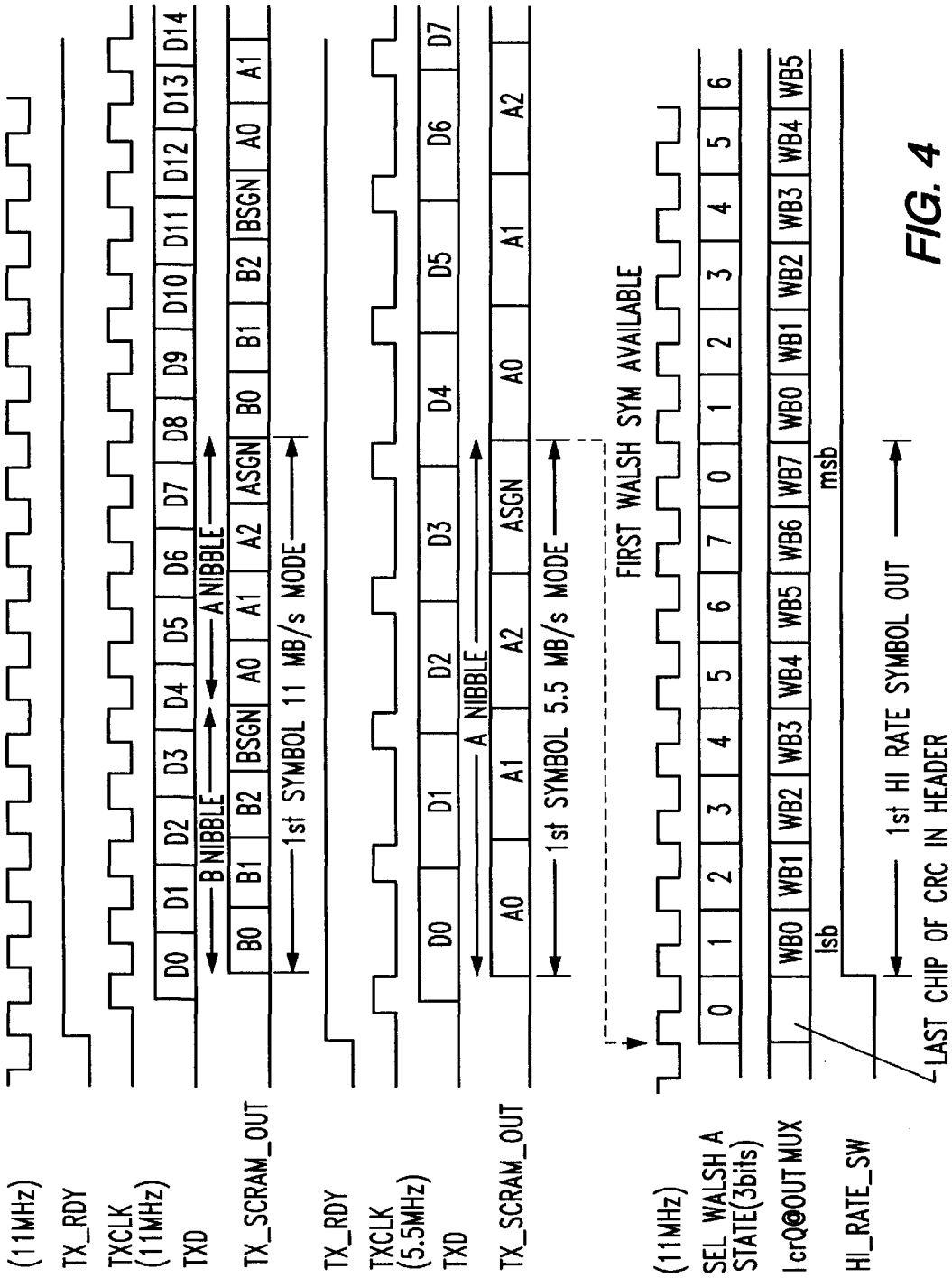
(11MHz)
TX_RDY
TXCLK (11MHz)
TXD
TX_SCRAM_OUT
D0 D1 D2 D3 D4 D5 D6 D7 D8 D9 D10 D11 D12 D13 D14
B NIBBLE
A NIBBLE
B0 B1 B2 BSGN A0 A1 A2 ASGN B0 B1 B2 BSGN A0 A1
1st SYMBOL 11 MB/s MODE
TX_RDY
TXCLK (5.5MHz)
TXD
TX_SCRAM_OUT
D0 D1 D2 D3 D4 D5 D6 D7
A NIBBLE
A0 A1 A2 ASGN A0 A1 A2
1st SYMBOL 5.5 MB/s MODE
FIRST WALSH SYM AVAILABLE
(11MHz)
SEL_WALSH A STATE(3bits)
0 1 2 3 4 5 6 7 0 1 2 3 4 5 6
IcrQ@OUT MUX
WB0 WB1 WB2 WB3 WB4 WB5 WB6 WB7 WB0 WB1 WB2 WB3 WB4 WB5
lsb
msb
HI_RATE_SW
1st HI RATE SYMBOL OUT
LAST CHIP OF CRC IN HEADER

FIG. 4

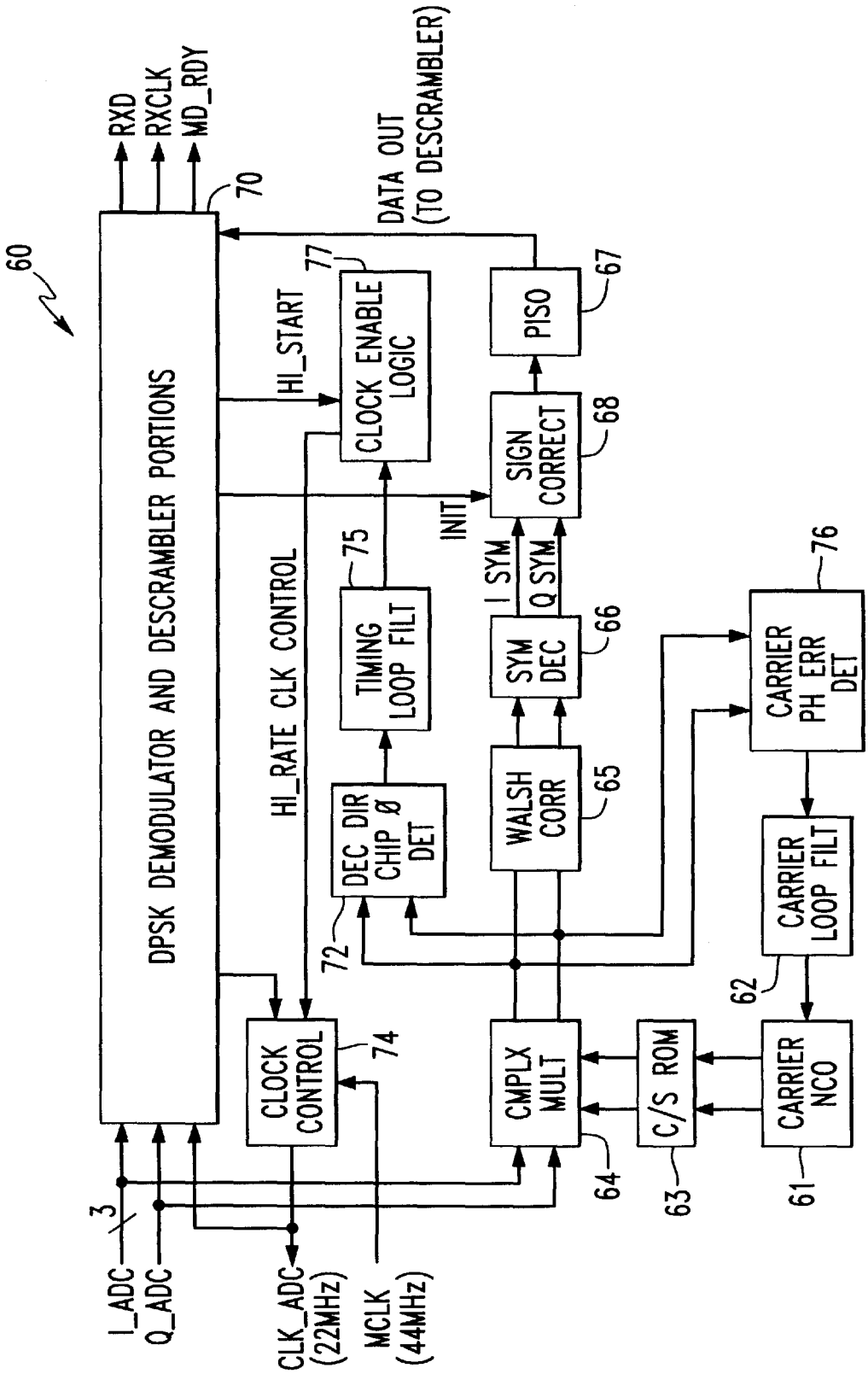
60
DPSK DEMODULATOR AND DESCRAMBLER PORTIONS
70
RXD
RXCLK
MD_RDY
DATA OUT
(TO DESCRAMBLER)
HI_START
77
CLOCK ENABLE LOGIC
PISO
67
SIGN CORRECT
68
INIT
HI_RATE CLK CONTROL
75
TIMING LOOP FILT
I SYM
Q SYM
SYM DEC
66
76
CARRIER PH ERR DET
DEC DIR CHIP Ø DET
WALSH CORR
65
CARRIER LOOP FILT
72
62
CLOCK CONTROL
74
CMPLX MULT
C/S ROM
CARRIER NCO
64
63
61
3
I_ADC
Q_ADC
CLK_ADC
(22MHz)
MCLK
(44MHz)

FIG. 5

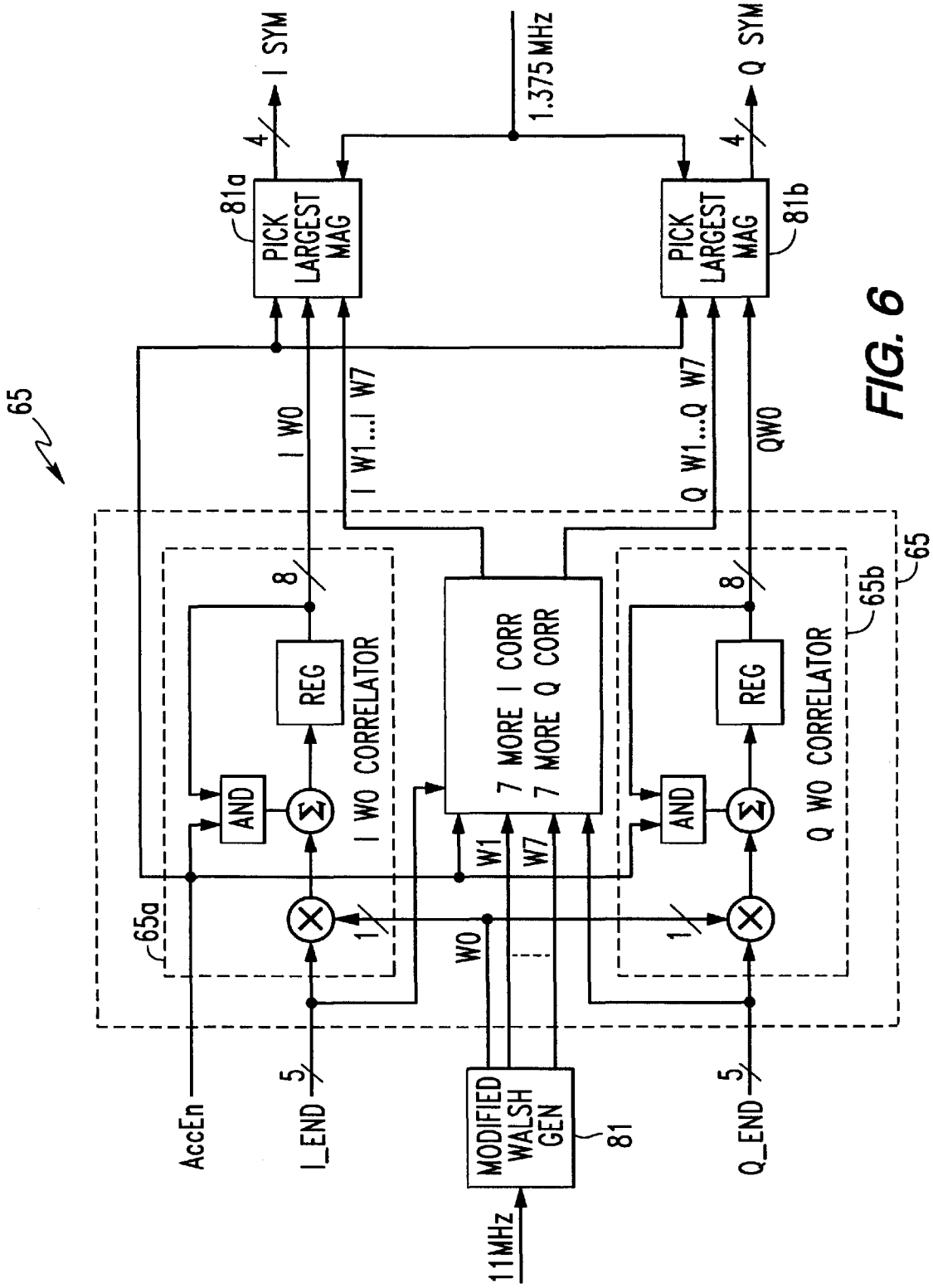
65
I SYM
4
81a
PICK LARGEST MAG
1.375 MHz
Q SYM
4
81b
PICK LARGEST MAG
I W0
I W1...I W7
Q W1...Q W7
QW0
8
REG
AND
I W0 CORRELATOR
7 MORE I CORR
7 MORE Q CORR
8
REG
AND
Q W0 CORRELATOR
65b
65
65a
W1
W7
W0
1
1
AccEn
5
I_END
MODIFIED WALSH GEN
81
5
Q_END
11MHz

FIG. 6

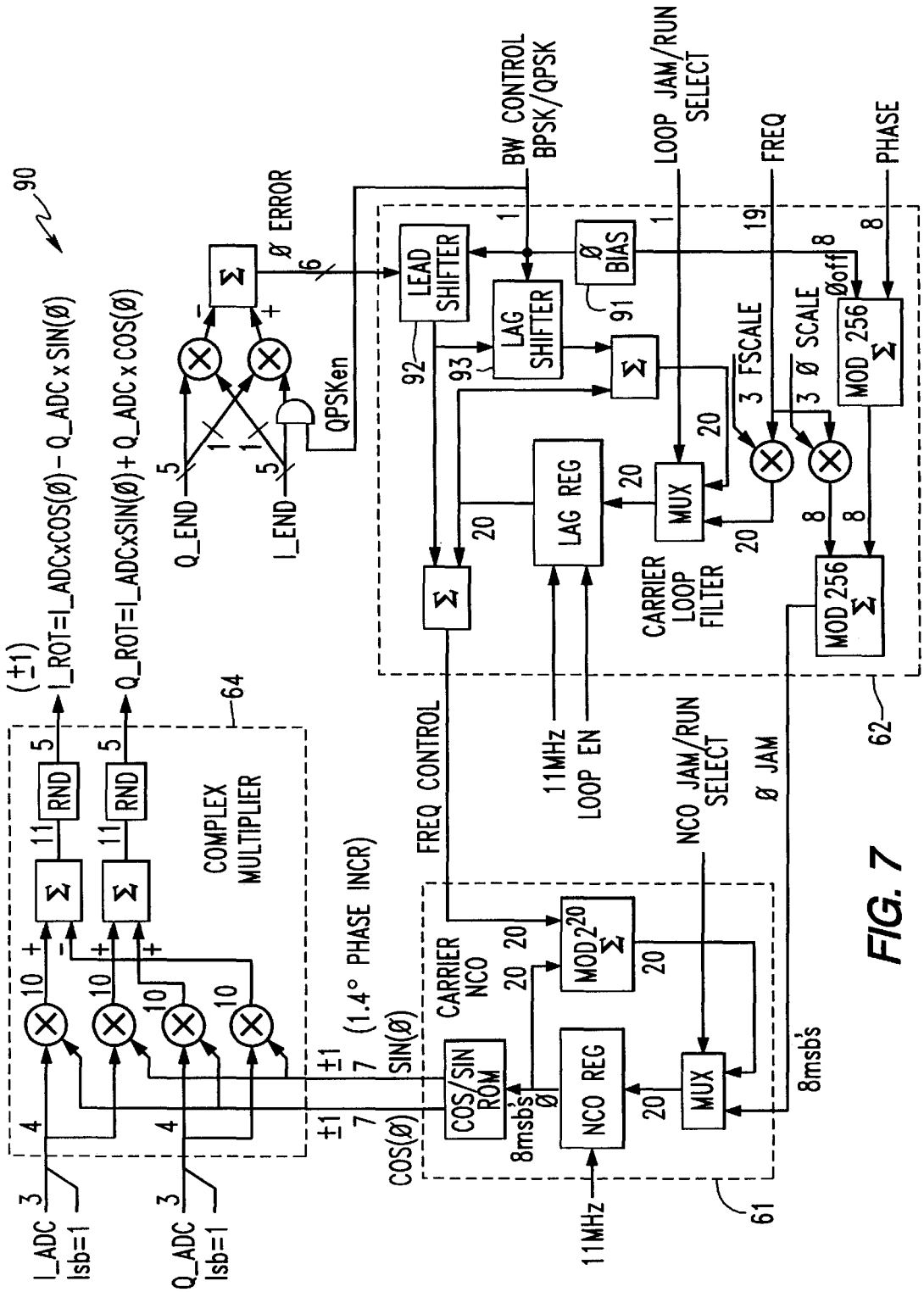
90
I_ADC
Isb=1
Q_ADC
Isb=1
COMPLEX MULTIPLIER
64
RND
RND
(±1)
I_ROT=I_ADCxCOS(Ø) − Q_ADC x SIN(Ø)
Q_ROT=I_ADCxSIN(Ø)+ Q_ADC x COS(Ø)
Q_END
I_END
QPSKen
Ø ERROR
COS(Ø)
SIN(Ø)
(1.4° PHASE INCR)
COS/SIN ROM
8msbs
Ø
CARRIER NCO
NCO REG
MOD 2^20
FREQ CONTROL
11MHz
61
MUX
NCO JAM/RUN SELECT
8msbs
Ø JAM
LEAD SHIFTER
LAG SHIFTER
LAG REG
Ø BIAS
BW CONTROL BPSK/QPSK
LOOP JAM/RUN SELECT
FREQ
PHASE
11MHz
LOOP EN
MUX
CARRIER LOOP FILTER
3 FSCALE
3 Ø SCALE
Øoff
MOD 256
MOD 256
62

FIG. 7

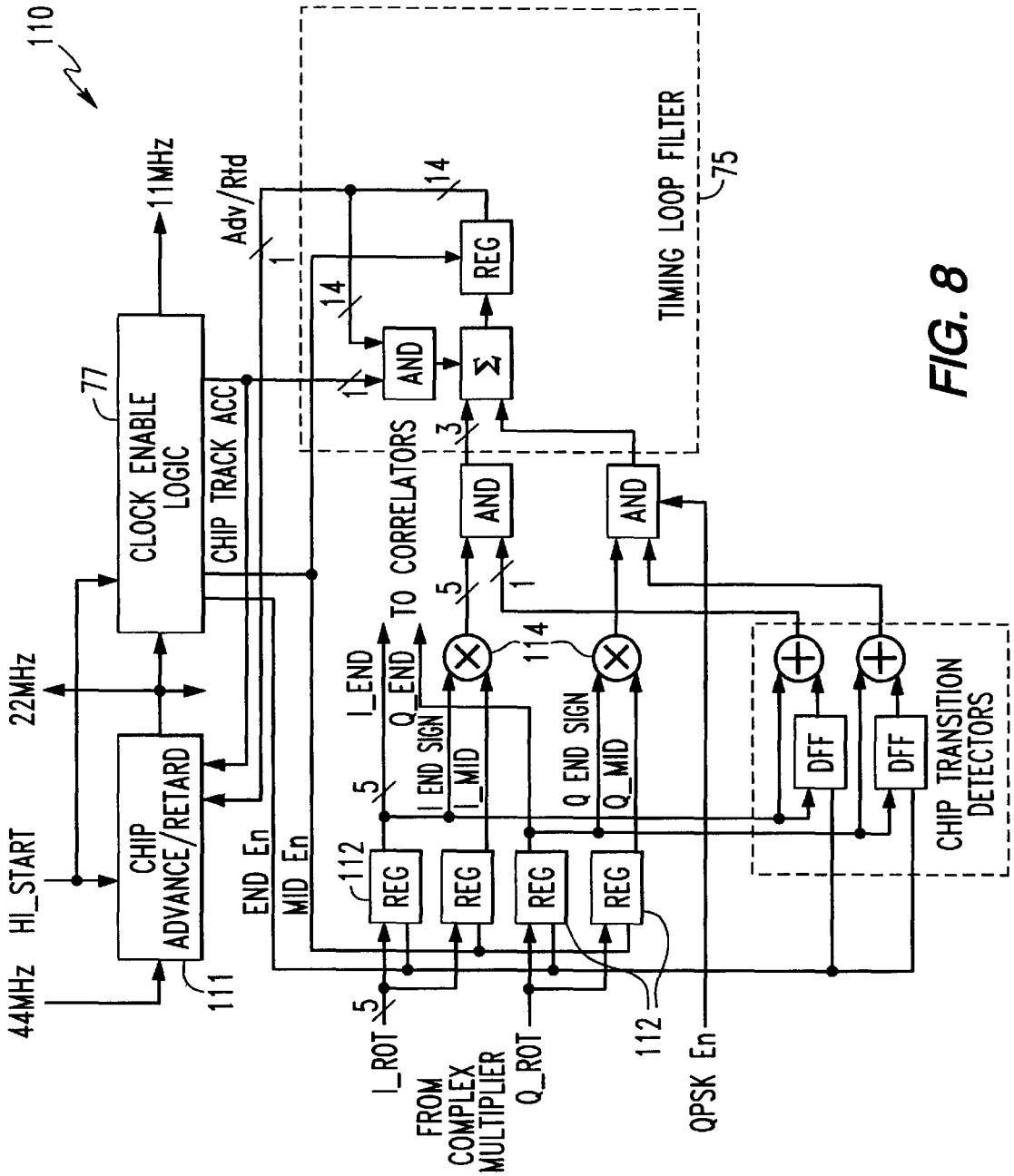
110
11MHz
Adv/Rtd
77
CLOCK ENABLE LOGIC
CHIP TRACK ACC
22MHz
HI_START
44MHz
CHIP ADVANCE/RETARD
111
END En
MID En
112
REG
I_END
Q_END
TO CORRELATORS
I_END SIGN
I_MID
Q_END SIGN
Q_MID
114
AND
Σ
14
3
5
1
TIMING LOOP FILTER
75
DFF
CHIP TRANSITION DETECTORS
I_ROT
FROM COMPLEX MULTIPLIER
Q_ROT
QPSK En

FIG. 8

HIGH DATA RATE SPREAD SPECTRUM TRANSCEIVER AND ASSOCIATED METHODS

FIELD OF THE INVENTION

The invention relates to the field of communication electronics, and, more particularly, to a spread spectrum transceiver and associated methods.

BACKGROUND OF THE INVENTION

Wireless or radio communication between separated electronic devices is widely used. For example, a wireless local area network (WLAN) is a flexible data communication system that may be an extension to, or an alternative for, a wired LAN within a building or campus. A WLAN uses radio technology to transmit and receive data over the air, thereby reducing or minimizing the need for wired connections. Accordingly, a WLAN combines data connectivity with user mobility, and, through simplified configurations, also permits a movable LAN.

Over the past several years, WLANs have gained acceptance among a number users including, for example, healthcare, retail, manufacturing, warehousing, and academic areas. These groups have benefited from the productivity gains of using hand-held terminals and notebook computers, for example, to transmit real-time information to centralized hosts for processing. Today WLANs are becoming more widely recognized and used as a general purpose connectivity alternative for an even broader range of users. In addition, a WLAN provides installation flexibility and permits a computer network to be used in situations where wireline technology is not practical.

In a typical WLAN, an access point provided by a transceiver, that is, a combination transmitter and receiver, connects to the wired network from a fixed location. Accordingly, the access transceiver receives, buffers, and transmits data between the WLAN and the wired network. A single access transceiver can support a small group of collocated users within a range of less than about one hundred to several hundred feet. The end users connect to the WLAN through transceivers which are typically implemented as PC cards in a notebook computer, or ISA or PCI cards for desktop computers. Of course the transceiver may be integrated with any device, such as a hand-held computer.

The assignee of the present invention has developed and manufactured a set of integrated circuits for a WLAN under the mark PRISM 1 which is compatible with the proposed IEEE 802.11 standard. The PRISM 1 chip set is further described in Harris Corporation Application Note entitled "Harris PRISM Chip Set", No. AN9614, March 1996; and also in a publication entitled "PRISM 2.4 GHz Chip Set", file no. 4063.4, October 1996.

The PRISM 1 chip set provides all the functions necessary for full or half duplex, direct sequence spread spectrum, packet communications at the 2.4 to 2.5 GHz ISM radio band. In particular, the HSP3824 baseband processor manufactured by Harris Corporation employs quadrature or bi-phase phase shift keying (QPSK or BPSK) modulation schemes. While the PRISM 1 chip set is operable at 2 Mbit/s for BPSK and 4 Mbit/s for QPSK, these data rates may not be sufficient for higher data rate applications.

Spread spectrum communications have been used for various applications, such as cellular telephone communications, to provide robustness to jamming, good multipath and fading path rejection, and inherently secure

communications from eavesdroppers, as described, for example, in U.S. Pat. No. 5,515,396 to Dalekotzin. The patent discloses a code division multiple access (CDMA) cellular communication system using four Walsh spreading codes to allow transmission of a higher information rate without a substantial duplication of transmitter hardware. U.S. Pat. No. 5,535,239 to Padovani et al., U.S. Pat. No. 5,416,797 to Gilhousen et al., U.S. Pat. No. 5,309,474 to Gilhousen et al., and U.S. Pat. No. 5,103,459 to Gilhousen et al. also disclose a CDMA spread spectrum cellular telephone communications system using Walsh function spreading codes.

Unfortunately, the conventional Walsh function spreading codes may create undesirable signal components for some applications. Moreover, a WLAN application, for example, may require a change between BPSK and QPSK during operation, that is, on-the-fly. Spreading codes may be difficult to use in such an application where an on-the-fly change is required.

SUMMARY OF THE INVENTION

In view of the foregoing background, it is therefore an object of the present invention to provide a spread spectrum transceiver and associated method permitting operation at higher data rates than conventional transceivers.

It is another object of the invention to provide a spread spectrum transceiver and associated method to permit operation at higher data rates and which may switch on-the-fly between different data rates and/or formats.

These and other objects, features and advantages in accordance with the invention are provided by a spread spectrum radio transceiver comprising a high data rate baseband processor and a radio circuit connected thereto. The baseband processor preferably includes a modulator for spread spectrum phase shift keying (PSK) modulating information for transmission via the radio circuit, and wherein the modulator, in one embodiment, comprises at least one modified Walsh code function encoder for encoding information according to a modified Walsh code. The baseband processor also preferably further comprises a demodulator for spread spectrum PSK demodulating information received from the radio circuit. The demodulator is preferably connected to the output of at least one analog-to-digital (A/D) converter, which, in turn, is AC-coupled to the associated receive portions of the radio circuit. Accordingly, the demodulator preferably comprises at least one modified Walsh code function correlator for decoding information according to the modified Walsh code. The modified Walsh code substantially reduces an average DC component which in combination with the AC-coupling to the at least one A/D converter thereby increases overall system performance. Other orthogonal and bi-orthogonal coding schemes may also be used, wherein the average DC component is preferably substantially reduced or avoided.

The modulator preferably comprises means for operating in one of a bi-phase PSK (BPSK) modulation mode at a first data rate defining a first format, and a quadrature PSK (QPSK) mode at a second data rate defining a second format. In addition, the demodulator preferably comprises means for operating in one of the first and second formats. The modulator may also preferably include header modulator means for modulating data packets to include a header at a predetermined modulation and a third data rate defining a third format, and for modulating variable data at one of the first and second formats. Accordingly, the demodulator thus preferably includes header demodulator means for demodu-

lating data packets by demodulating the header at the third format and for switching to either the first and second formats of the variable data after the header. The third format is preferably differential BPSK, and the third data rate is preferably lower than the first and second data rates.

The demodulator may preferably comprise first and second carrier tracking loops—the first carrier tracking loop for the third format, and the second carrier tracking loop for the first and second formats. The second carrier tracking loop, in turn, may comprise a carrier numerically controlled oscillator (NCO), and NCO control means for selectively operating the carrier NCO based upon a carrier phase of the first carrier tracking loop to thereby facilitate switching to the format of the variable data. The second carrier tracking loop may also comprise a carrier loop filter, and carrier loop filter control means for selectively operating the carrier loop filter based upon a frequency of the first carrier tracking loop to facilitate switching to the format of the variable data. The carrier tracking loops permit switching to the desired format after the header and on-the-fly.

The at least one modified Walsh code function correlator of the demodulator preferably comprises a modified Walsh function generator, and a plurality of parallel connected correlators connected to the modified Walsh function generator. The modified Walsh code may be a Walsh code modified by a modulo two addition of a fixed hexadecimal code thereto. In addition, the modulator in one embodiment preferably further comprises means for partitioning data into four bit nibbles of sign (one bit) and magnitude (three bits) to the modified Walsh code function encoder.

The modulator may also include spreading means for spreading each data bit using a pseudorandom (PN) sequence at a predetermined chip rate. Accordingly, the modulator may also comprise preamble modulating means for generating a preamble, and wherein the demodulator includes preamble demodulator means for demodulating the preamble for achieving initial PN sequence synchronization.

The modulator for the spread spectrum transceiver may include a scrambler, and the demodulator accordingly preferably includes a descrambler. The demodulator may also include clear channel assessing means for generating a clear channel assessment signal to facilitate communications only when the channel is clear.

The baseband processor is desirably coupled to a radio circuit for the complete spread spectrum transceiver. Accordingly, the transceiver preferably includes a quadrature intermediate frequency modulator/demodulator connected to the baseband processor, and an up/down frequency converter connected to the quadrature intermediate frequency modulator/demodulator. In addition, the radio circuit preferably further comprises a low noise amplifier having an output connected to an input of the up/down converter, and a radio frequency power amplifier having an input connected to an output of the up/down converter. The spread spectrum radio transceiver preferably also includes an antenna, and an antenna switch for switching the antenna between the output of the radio frequency power amplifier and the input of the low noise amplifier.

A method aspect of the invention is for baseband processing for spread spectrum radio communication. The method preferably comprises the steps of: spread spectrum phase shift keying (PSK) modulating information for transmission by encoding information according to a predetermined bi-orthogonal code for reducing an average DC signal component; and spread spectrum PSK demodulating received information by decoding information according to the predetermined bi-orthogonal code. The predetermined bi-orthogonal code is preferably a modified Walsh function code.

BRIEF DESCRIPTION OF THE DRAWINGS

FIG. **1** is a schematic circuit diagram of a transceiver in accordance with the present invention.

FIG. **2** is a schematic circuit diagram of a modulator portion of the high data rate baseband processor in accordance with the present invention.

FIG. **3** is a timing diagram of signals generated by the present invention.

FIG. **4** is a timing diagram of additional signals generated by the present invention.

FIG. **5** is a schematic circuit diagram of a demodulator portion of the high data rate baseband processor in accordance with the present invention.

FIG. **6** is a schematic circuit diagram of the correlator portion of the demodulator of the high data rate baseband processor in accordance with the present invention.

FIG. **7** is a schematic circuit diagram of additional portions of the demodulator of the high data rate baseband processor in accordance with the present invention.

FIG. **8** is a schematic circuit diagram of further portions of the demodulator of the high data rate baseband processor in accordance with the present invention.

DETAILED DESCRIPTION OF THE PREFERRED EMBODIMENTS

The present invention will now be described more fully hereinafter with reference to the accompanying drawings, in which preferred embodiments of the invention are shown. This invention may, however, be embodied in many different forms and should not be construed as limited to the embodiments set forth herein. Rather, these embodiments are provided so that this disclosure will be thorough and complete, and will fully convey the scope of the invention to those skilled in the art. Like numbers refer to like elements throughout.

Referring to FIG. **1**, a wireless transceiver **30** in accordance with the invention is first described. The transceiver **30** may be readily used for WLAN applications in the 2.4 GHz ISM band in accordance with the proposed IEEE 802.11 standard. Those of skill in the art will readily recognize other applications for the transceiver **30** as well. The transceiver **30** includes the selectable antennas **31** coupled to the radio power amplifier and TX/RX switch **32** as may be provided by a Harris part number HFA3925. As would be readily understood by those skilled in the art, multiple antennas may be provided for space diversity reception.

A low noise amplifier **38**, as may be provided by Harris part number HFA3424, is also operatively connected to the antennas. The illustrated up/down converter **33** is connected to both the low noise amplifier **38** and the RF power amplifier and TX/RX switch **32** as would be readily understood by those skilled in the art. The up/down converter **33** may be provided by a Harris part number HFA3624, for example. The up/down converter **33**, in turn, is connected to the illustrated dual frequency synthesizer **34** and the quad IF modulator/demodulator **35**. The dual synthesizer **34** may be a Harris part number HFA3524 and the quad IF modulator **35** may be a Harris part number HFA3724. All the components described so far are included in a 2.4 GHz direct sequence spread spectrum wireless transceiver chip set

manufactured by Harris Corporation under the designation PRISM 1. Various filters **36**, and the illustrated voltage controlled oscillators **37** may also be provided as would be readily understood by those skilled in the art and as further described in the Harris PRISM 1 chip set literature, such as the application note No. AN9614, March 1996, the entire disclosure of which is incorporated herein by reference.

Turning now more particularly to the right hand side of FIG. **1**, the high data rate direct sequence spread spectrum (DSS) baseband processor **40** in accordance with the present invention is now described. The conventional Harris PRISM 1 chip set includes a low data rate DSS baseband processor available under the designation HSP3824. This prior baseband processor is described in detail in a publication entitled "Direct Sequence Spread Spectrum Baseband Processor, March 1996, file number 4064.4, and the entire disclosure of which is incorporated herein by reference.

Like the HSP3824 baseband processor, the high data rate baseband processor **40** of the invention contains all of the functions necessary for a full or half duplex packet baseband transceiver. The processor **40** has on-board dual 3-bit A/D converters **41** for receiving the receive I and Q signals from the quad IF modulator **35**. Also like the HSP3824, the high data rate processor **40** includes a receive signal strength indicator (RSSI) monitoring function with the on-board 6-bit A/D converter and CCA circuit block **44** provides a clear channel assessment (CCA) to avoid data collisions and optimize network throughput as would be readily understood by those skilled in the art.

The present invention provides an extension of the PRISM 1 product from 1 Mbit/s BPSK and 2 Mbit/s QPSK to 5.5 Mbit/s BPSK and 11 Mbit/s QPSK. This is accomplished by keeping the chip rate constant at 11 Mchip/s. This allows the same RF circuits to be used for higher data rates. The symbol rate of the high rate mode is 11 MHz/8=1.375 Msymbol/s.

For the 5.5 Mbit/s mode of the present invention, the bits are scrambled and then encoded from 4 bit nibbles to 8 chip modified Walsh functions. This mapping results in bi-orthogonal codes which have a better bit error rate (BER) performance than BPSK alone. The resulting 11 Mchip/s data stream is BPSK modulated. The demodulator comprises a modified Walsh correlator and associated chip tracking, carrier tracking, and reformatting devices as described in greater detail below.

For the 11 Mbit/s mode, the bits are scrambled and then encoded from 4 bit nibbles to 8 chip modified Walsh functions independently on each I and Q rail. There are 8 information bits per symbol mapped to 2 modified Walsh functions. This mapping results in bi-orthogonal codes which have better BER performance than QPSK alone. The resulting two 11 Mchip/s data streams are QPSK modulated.

The theoretical BER performance of this type of modulation is approximately 10^{-5} at an Eb/No of 8 dB versus 9.6 dB for plain BPSK or QPSK. This coding gain is due to the bi-orthogonal coding. There is bandwidth expansion for all of the modulations to help combat multi-path and reduce the effects of interference.

Referring additionally to FIG. **2**, the output of the QPSK/BPSK modulator and scrambler circuit **51** is partitioned into nibbles of Sign-Magnitude of 4 bits, with the least significant bit (LSB) first. For QPSK, 2 nibbles are presented in parallel to the Modified Walsh Generators **53***a,* **53***b*—the first nibble from the B serial-in/parallel-out SIPO circuit block **52***b* and the second from A SIPO **52***a*. The two nibbles [illegible] The bit rate may be 11 Mbit/s as illustrated. Therefore, the symbol rate is 1.375 Mbit/s (11/8=1.375). For BPSK, nibbles are presented from the A SIPO **52***a* only. The B SIPO **52***b* is disabled. A nibble forms a symbol of data. The bit rate in this instance is 5.5 Mbit/s and the symbol rate remains 1.375 Mbit/s (5.5/4=1.375).

The Magnitude part of the SIPO output points to one of the Modified Walsh Sequences shown in the table below, along with the basic Walsh sequences for comparison.

MAG	BASIC WALSH	MODIFIED WALSH
0	00	03
1	0F	0C
2	33	30
3	3C	3F
4	55	56
5	5A	59
6	66	65
7	69	6A.

The Sel Walsh A,, and Sel Walsh B bits from the clock enable logic circuit **54** multiplex the selected Walsh sequence to the output, and wherein the LSBs are output first. The A Sign and B Sign bits bypass the respective Modified Walsh Generators **53***a,* **53***b* and are XOR'd to the sequence.

As would be readily understood by those skilled in the art, there are other possible mappings of bits to Walsh symbols that are contemplated by the present invention. In addition, the Modified Walsh code may be generated by modulo two adding a fixed hexadecimal code to the basic or standard Walsh codes to thereby reduce the average DC signal component and thereby enhance overall performance as will be explained in greater detail below.

The output of the Diff encoders of the last symbol of the header CRC is the reference for the high rate data. The header may always be BPSK. This reference is XOR'd to I and Q signals before the output. This allows the demodulator **60**, as described in greater detail below, to compensate for phase ambiguity without Diff decoding the high rate data. Data flip flops **55***a,* **55***b* are connected to the multiplexer, although in other embodiments the flip flops may be positioned further downstream as would be readily understood by those skilled in the art. The output chip rate is 11 Mchip/s. For BPSK, the same chip sequence is output on each I and Q rail via the multiplexer **57**. The output multiplexer **58** provides the selection of the appropriate data rate and format.

Referring now additionally to FIG. **3**, the timing and signal format for the interface **80** is described in greater detail. Referring to the left hand portion, Sync is all 1's, and SFD is F3AOh for the PLCP preamble **90**. Now relating to the PLCP header **91**, the SIGNAL is:

0Ah	1 Mbit/s BPSK,
14h	2 Mbit/S QPSK,
37h	5.5 Mbit/s BPSK, and
6Eh	11 Mbit/s QPSK.

The SERVICE is OOh, the LENGTH is XXXXh wherein the length is in μs, and the CRC is XXXXh calculated based on SIGNAL, SERVICE and LENGTH. MPDU is variable with a number of octets (bytes).

The PLCP preamble and PLCP header are always at 1 Mbit/s, Diff encoded, scrambled and spread with an 11 chip barker. SYNC and SFD are internally generated. SIGNAL, SERVICE and LENGTH fields are provided by the interface

80 via a control port. SIGNAL is indicated by 2 control bits and then formatted as described. The interface **80** provides the LENGTH in μs. CRC in PLCP header is performed on SIGNAL, SERVICE and LENGTH fields.

MPDU is serially provided by Interface **80** and is the variable data scrambled for normal operation. The reference phase for the first symbol of the MPDU is the output phase of the last symbol of the header for Diff Encoding. The last symbol of the header into the scrambler **51** must be followed by the first bit of the MPDU. The variable data may be modulated and demodulated in different formats than the header portion to thereby increase the data rate, and while a switchover as indicated by the switchover point in FIG. **3**, occurs on-the-fly.

Turning now additionally to FIG. **4**, the timing of the high data rate modulator **50** may be further understood. With the illustrated timing, the delay from TX_RDY to the first Hi Rate Output Chip is ten 11 MHz clock periods or 909.1 ns. The other illustrated quantities will be readily appreciated in view of the above description.

Referring now to FIG. **5**, the high data rate demodulator **60** in accordance with the invention is further described. The high rate circuits are activated after the signal field indicates 5.5 or 11 Mbit/s operation. At a certain time, the start phase is jammed into the Carrier NCO **61** and the start frequency offset is jammed into the Carrier Loop Filter **62**. The signal is frequency translated by the C/S ROM **63** and the Complex Multiplier **64** and passed to the Walsh Correlator **65**. The correlator **65** output drives the Symbol Decision circuits **66**, as illustrated. The output of the Symbol Decision circuits **66** are serially shifted by the parallel-in/serial-out SIPO block **67** to the descrambler portion of the PSK Demodulator and Scrambler circuit **70** after passing through the Sign Correction circuit **68** based on the last symbol of the header. The timing of the switch over desirably makes the symbol decisions ready at the correct time.

The signal is phase and frequency tracked via the Complex Multiplier **64**, Carrier NCO **61** and Carrier Loop Filter **62**. The output of the Complex Multiplier **64** also feeds the Carrier Phase Error Detector **76**. A decision directed Chip Phase Error Detector **72** feeds the illustrated Timing Loop Filter **75** which, in turn, is connected to the Clock Enable Logic **77**. A decision from the Chip Phase Error Detector **72** is used instead of early-late correlations for chip tracking since the SNR is high. This greatly reduces the additional circuitry required for high rate operation. The 44 MHz master clock input to the Clock Control **74** will allow tracking high rate mode chips with ±⅛ chip steps. Only the stepper is required to run at 44 MHz, while most of the remaining circuits run at 11 MHz. The circuit is only required to operate with a long header and sync.

Turning now additionally to FIG. **6**, a pair of Walsh Correlators **65***a*, **65***b* is further described. The I_END and Q_END inputs from the chip tracking loop are input at 11 MHz. The Modified Walsh Generator **81** produces the 8 Walsh codes (W0 to W7) serially to sixteen parallel correlators (8 for I_END and 8 for Q_END). The sixteen correlations are available at a 1.375 MHz rate. The Walsh Codes (W0 to W7) are the same as listed in the table above for the high data rate modulator. For the 11 Mbit/s mode, the largest magnitude of I W0 to I W7 is selected by the Pick Largest Magnitude circuit **81***a* to form I sym. I sym is formatted in Sign-Magnitude. The Magnitude is the Modified Walsh Index (0 to 7) of the largest Correlation and Sign is the sign bit of the input of the winning Correlation. The Q channel is processed in parallel in the same manner. For the 5.5 Mbit/s mode, the largest magnitude of I W0 to I W7 is selected to form Isym. In this case, only I sym is output. AccEn controls the correlator timing and is supplied by timing and control circuits.

With additional reference to FIG. **7**, the carrier tracking loop **90** is now described. In the described embodiment, the number of bits are worst case for estimation purposes. While 3 bits are used for the A/D conversion, a higher number may be desired in other embodiments as would be readily appreciated by those skilled in the art. The Phase BIAS circuit **91** compensates for constellation rotation, that is, BPSK or QPSK. FSCALE compensates for the NCO clock frequency. PHASE SCALE compensates for a phase shift due to frequency offset over the time difference of the first and second loops. The Lead and Lag Shifters **92**, **93** form the loop multiplier for the second order carrier tracking loop filter **62**.

Referring now additionally to FIG. **8**, the Chip Tracking Loop **110** is further described. All circuits except Chip Advance/Retard **111** use the 22 MHz clock signal. The Chip Advance/Retard circuit **111** may be made to integrate with the existing clock of the prior art PRISM 1 circuit. PRISM 1 steps in ±¼ chips. The PRISM 1 timing may be changed to switchover this circuit for high data rate operation. The A/D clock switches without a phase shift. I_ROT and Q_ROT are from the Complex Multiplier **64** at 22 MHz. They are sampled by the illustrated Registers **112** to produce I_End and Q_End at 11 MHz, which are routed to the Correlators **65** (FIG. **6**). The alternate samples I_Mid and Q_Mid are used to measure the chip phase error. For QPSK, errors are generated from both rails, and for BPSK, the error is only generated from the I rail. QPSK En disables the Q rail phase error for BPSK operation.

The sign of the accumulator is used to advance or retard the chip timing by ⅛ chip. This circuit must be enabled by the PRISM 1 circuits at the proper time via the HI_START signal. The errors are summed and accumulated for 32 symbols (256 chips). The Chip Track Acc signal them dumps the accumulator for the next measurement. The chip phase error is generated if the End Sign bits bracketing the Mid sample are different. This is accomplished using the transition detectors. The sign of the chip phase error is determined by the sign of the End sample after the Mid sample. A multiplier **114** is shown for multiplying by +1 if the End Sign is 0 or by −1 if the End Sign is 1. If the End sign bits are identical, the chip phase error for that rail is 0. The AND function is only enabled by transitions.

Many modifications and other embodiments of the invention will come to the mind of one skilled in the art having the benefit of the teachings presented in the foregoing descriptions and the associated drawings. Therefore, it is to be understood that the invention is not to be limited to the specific embodiments disclosed, and that modifications and embodiments are intended to be included within the scope of the appended claims.

That which is claimed is:

1. A spread spectrum radio transceiver comprising:

a baseband processor and a radio circuit connected thereto, said baseband processor comprising

a demodulator for spread spectrum phase shift keying (PSK) demodulating information received from said radio circuit,

at least one analog-to-digital (A/D) converter having an output connected to said demodulator and an input AC-coupled to said radio circuit,

said demodulator comprising at least one modified Walsh code function correlator for decoding information according to a modified Walsh code reducing

an average DC signal component which in combination with the AC-coupling to said at least one A/D converter enhances overall performance, and

a modulator for spread spectrum PSK modulating information for transmission via the radio circuit, said modulator comprising at least one modified Walsh code function encoder for encoding information according to the modified Walsh code.

2. A spread spectrum radio transceiver according to claim **1** wherein said modulator comprises means for operating in one of first format defined by bi-phase PSK (BPSK) modulation at a first data rate and a second format defined by quadrature PSK (QPSK) modulation at a second data rate; and wherein said demodulator comprises means for operating in one of the first and second formats.

3. A spread spectrum radio transceiver according to claim **2** wherein said modulator comprises header modulator means for modulating data packets to include a header at a third format defined by a predetermined modulation at a third data rate and variable data in one of the first and second formats; and wherein said demodulator comprises header demodulator means for demodulating data packets by demodulating the header at the third format and for switching to the respective one of the first and second formats of the variable data after the header.

4. A spread spectrum radio transceiver according to claim **3** wherein the predetermined modulation of the third format is differential BPSK (DBPSK), and wherein the third data rate is lower than the first and second data rates.

5. A spread spectrum radio transceiver according to claim **3** wherein said demodulator further comprises:

a first carrier tracking loop for the third format; and

a second carrier tracking loop for the first and second formats.

6. A spread spectrum radio transceiver according to claim **5** wherein said second carrier tracking loop comprises:

a carrier numerically controlled oscillator (NCO); and

carrier NCO control means for selectively operating said carrier NCO based upon a carrier phase of said first carrier tracking loop to thereby facilitate switching to the format of the variable data.

7. A spread spectrum radio transceiver according to claim **5** wherein said second carrier tracking loop comprises:

a carrier loop filter; and

carrier loop filter control means for selectively operating said carrier loop filter based upon a frequency of said first carrier tracking loop to thereby facilitate switching to the format of the variable data.

8. A spread spectrum radio transceiver according to claim **1** wherein said modulator further comprises means for partitioning data into four bit nibbles of sign (one bit) and magnitude (three bits) to said at least one modified Walsh code function encoder.

9. A spread spectrum radio transceiver according to claim **1** wherein the modified Walsh code is a Walsh code modified by a modulo two addition of a fixed hexadecimal code thereto.

10. A spread spectrum radio transceiver according to claim **1** wherein said at least one modified Walsh code function correlator comprises:

a modified Walsh function generator; and

a plurality of parallel connected correlators connected to said modified Walsh function generator.

11. A spread spectrum radio transceiver according to claim **1** wherein said modulator comprises spreading means for spreading each bit using a pseudorandom (PN) sequence at a predetermined chip rate and preamble modulating means for generating a preamble; and wherein said demodulator comprises preamble demodulator means for demodulating the preamble for achieving initial PN sequence synchronization.

12. A spread spectrum radio transceiver according to claim **1** wherein said modulator comprises a scrambler; and wherein said demodulator comprises a descrambler.

13. A spread spectrum radio transceiver according to claim **1** wherein said demodulator comprises clear channel assessing means for generating a clear channel assessment signal.

14. A spread spectrum radio transceiver according to claim **1** wherein said radio circuit comprises:

a quadrature intermediate frequency modulator/demodulator connected to said baseband processor; and

an up/down frequency converter connected to said quadrature intermediate frequency modulator/demodulator.

15. A spread spectrum radio transceiver according to claim **14** wherein said radio circuit further comprises:

a low noise amplifier having an output connected to an input of said up/down converter; and

a radio frequency power amplifier having an input connected to an output of said up/down converter.

16. A spread spectrum radio transceiver according to claim **15** further comprising:

an antenna; and

an antenna switch for switching said antenna between the output of said radio frequency power amplifier and the input of said low noise amplifier.

17. A baseband processor for a spread spectrum radio transceiver, said baseband processor comprising:

a demodulator for spread spectrum phase shift keying (PSK) demodulating;

at least one analog-to-digital (A/D) converter having an output connected to said demodulator and an input AC-coupled to receive information;

said demodulator comprising at least one predetermined orthogonal code function correlator for decoding information according to a predetermined orthogonal code reducing an average DC signal component to thereby increase AC-coupling to said at least one A/D converter; and

a modulator for spread spectrum PSK modulating information for transmission, said modulator comprising at least one predetermined orthogonal code function encoder for encoding information according to the predetermined orthogonal code.

18. A baseband processor according to claim **17** wherein said modulator comprises means for operating in one of first format defined by bi-phase PSK (BPSK) modulation at a first data rate and a second format defined by quadrature PSK (QPSK) modulation at a second data rate; and wherein said demodulator comprises means for operating in one of the first and second formats.

19. A baseband processor according to claim **18** wherein said modulator comprises header modulator means for modulating data packets to include a header at a third format defined by a predetermined modulation at a third data rate and variable data in one of the first and second formats; and wherein said demodulator comprises header demodulator means for demodulating data packets by demodulating the header at the third format and for switching to the respective one of the first and second formats of the variable data after the header.

20. A baseband processor according to claim 19 wherein the predetermined modulation of the third format is differential BPSK (DBPSK), and wherein the third data rate is lower than the first and second data rates.

21. A baseband processor according to claim 19 wherein said demodulator further comprises:

a first carrier tracking loop for the third format; and

a second carrier tracking loop for the first and second formats.

22. A baseband processor according to claim 21 wherein said second carrier tracking loop comprises:

a carrier numerically controlled oscillator (NCO); and

carrier NCO control means for selectively operating said carrier NCO based upon a carrier phase of said first carrier tracking loop to thereby facilitate switching to the format of the variable data.

23. A baseband processor according to claim 21 wherein said second carrier tracking loop comprises:

a carrier loop filter; and

carrier loop filter control means for selectively operating said carrier loop filter based upon a frequency of said first carrier tracking loop to thereby facilitate switching to the format of the variable data.

24. A baseband processor according to claim 17 wherein said modulator further comprises means for partitioning data into four bit nibbles of sign (one bit) and magnitude (three bits) to said at least one predetermined orthogonal code function encoder.

25. A baseband processor according to claim 17 wherein the predetermined orthogonal code is a Walsh code modified by a modulo two addition of a fixed hexadecimal code thereto.

26. A baseband processor according to claim 17 wherein the predetermined orthogonal code is a bi-orthogonal code.

27. A baseband processor according to claim 17 wherein said at least one predetermined orthogonal code function correlator comprises:

a predetermined orthogonal code function generator; and

a plurality of parallel connected correlators connected to said predetermined orthogonal code function generator.

28. A baseband processor according to claim 17 wherein said modulator comprises spreading means for spreading each data bit using a pseudorandom (PN) sequence at a predetermined chip rate and preamble modulating means for generating a preamble; and wherein said demodulator comprises preamble demodulator means for demodulating the preamble for achieving initial PN sequence synchronization.

29. A baseband processor according to claim 17 wherein said modulator comprises a scrambler; and wherein said demodulator comprises a descrambler.

30. A baseband processor for a spread spectrum radio transceiver, said baseband processor comprising:

a modulator for spread spectrum phase shift keying (PSK) modulating information for transmission, said modulator comprising

at least one encoder for encoding information for transmission,

means for operating in one of a first format defined by bi-phase PSK (BPSK) modulation at a first data rate and a second format defined by quadrature PSK (QPSK) modulation at a second data rate,

header modulator means for modulating data packets to include a header at a third format defined by a predetermined modulation at a third data rate and variable data in one of the first and second formats; and

a demodulator for spread spectrum PSK demodulating received information, said demodulator comprising

at least one correlator for decoding received information,

means for operating in one of the first and second formats,

header demodulator means for demodulating data packets by demodulating the header at the third format and for switching to the respective one of the first and second formats of the variable data after the header,

a first carrier tracking loop for the third format, and

a second carrier tracking loop for the first and second formats.

31. A baseband processor according to claim 30 wherein the predetermined modulation of the third format is differential BPSK (DBPSK), and wherein the third data rate is lower than the first and second data rates.

32. A baseband processor according to claim 30 wherein said second carrier tracking loop comprises:

a carrier numerically controlled oscillator (NCO); and

carrier NCO control means for selectively operating said carrier NCO based upon a carrier phase of said first carrier tracking loop to thereby facilitate switching to the format of the variable data.

33. A baseband processor according to claim 30 wherein said second carrier tracking loop comprises:

a carrier loop filter; and

carrier loop filter control means for selectively operating said carrier loop filter based upon a frequency of said first carrier tracking loop to thereby facilitate switching to the format of the variable data.

34. A baseband processor according to claim 30 wherein said modulator comprises spreading means for spreading each data bit using a pseudorandom (PN) sequence at a predetermined chip rate and preamble modulating means for generating a preamble; and wherein said demodulator comprises preamble demodulator means for demodulating the preamble for achieving initial PN sequence synchronization.

35. A baseband processor according to claim 30 wherein said modulator comprises a scrambler; and wherein said demodulator comprises a descrambler.

36. A modulator for a spread spectrum radio transceiver, said modulator comprising:

modulator means for spread spectrum phase shift keying (PSK) modulating information for transmission, said modulator means comprising at least one predetermined orthogonal code function encoder for encoding information according to a predetermined orthogonal code for reducing an average DC signal component.

37. A modulator according to claim 36 wherein said modulator means comprises means for operating in one of first format defined by bi-phase PSK (BPSK) modulation at a first data rate and a second format defined by quadrature PSK (QPSK) modulation at a second data rate.

38. A modulator according to claim 37 wherein said modulator means comprises header modulator means for modulating data packets to include a header at a third format defined by a predetermined modulation at a third data rate and variable data in one of the first and second formats.

39. A modulator according to claim 38 wherein the predetermined modulation of the third format is differential BPSK (DBPSK), and wherein the third data rate is lower than the first and second data rates.

40. A modulator according to claim 36 wherein said modulator means further comprises means for partitioning

data into four bit nibbles of sign (one bit) and magnitude (three bits) to said at least one predetermined orthogonal code function encoder, and wherein the predetermined orthogonal code is a Walsh code modified by a modulo two addition of a fixed hexadecimal code thereto.

41. A modulator according to claim **36** wherein said at least one predetermined orthogonal code function correlator comprises:

a predetermined orthogonal code function generator; and

a plurality of parallel connected correlators connected to said predetermined orthogonal code function generator.

42. A modulator according to claim **36** wherein the predetermined orthogonal code is a Walsh code modified by a modulo two addition of a fixed hexadecimal code thereto.

43. A modulator according to claim **36** wherein the predetermined orthogonal code is a bi-orthogonal code.

44. A demodulator for a spread spectrum radio transceiver, said demodulator comprising:

demodulator means for spread spectrum phase shift keying (PSK) demodulating information received from said radio circuit, said demodulator means comprising at least one predetermined orthogonal code function correlator for decoding information according to a predetermined orthogonal code reducing an average DC signal component.

45. A demodulator according to claim **44** wherein said demodulator means comprises means for operating in one of first format defined by bi-phase PSK (BPSK) modulation at a first data rate and a second format defined by quadrature PSK (QPSK) modulation at a second data rate.

46. A demodulator according to claim **45** wherein said demodulator means comprises header demodulator means for demodulating data packets including a header in a third format defined by a predetermined modulation at a third data rate and variable data in one of the first and second formats, and for switching to the respective one of the first and second formats of the variable data after the header.

47. A demodulator according to claim **46** wherein the predetermined modulation of the third format is differential BPSK (DBPSK), and wherein the third data rate is lower than the first and second data rates.

48. A demodulator according to claim **46** wherein said demodulator means further comprises:

a first carrier tracking loop for the third format; and

a second carrier tracking loop for the first and second formats.

49. A demodulator according to claim **48** wherein said second carrier tracking loop comprises:

a carrier numerically controlled oscillator (NCO); and

carrier NCO control means for selectively operating said carrier NCO based upon a carrier phase of said first carrier tracking loop to thereby facilitate switching to the format of the variable data.

50. A demodulator according to claim **48** wherein said second carrier tracking loop comprises:

a carrier loop filter; and

carrier loop filter control means for selectively operating said carrier loop filter based upon a frequency of said first carrier tracking loop to thereby facilitate switching to the format of the variable data.

51. A demodulator according to claim **44** further comprising means for partitioning data into four bit nibbles of sign (one bit) and magnitude (three bits).

52. A demodulator according to claim **44** wherein the predetermined orthogonal code is a Walsh code modified by a modulo two addition of a fixed hexadecimal code thereto.

53. A demodulator according to claim **44** wherein the predetermined orthogonal code is a bi-orthogonal code.

54. A demodulator according to claim **44** wherein said at least one predetermined orthogonal code function correlator comprises:

a predetermined orthogonal code function generator; and

a plurality of parallel connected correlators connected to said predetermined orthogonal code function generator.

55. A method for baseband processor for spread spectrum radio communication, the method comprising the steps of:

spread spectrum phase shift keying (PSK) modulating information for transmission while encoding the information according to the predetermined orthogonal code for reducing an average DC signal component; and

spread spectrum PSK demodulating received information by decoding the received information according to the predetermined orthogonal code.

56. A method according to claim **55** further comprising the step of AC-coupling received information for spread spectrum PSK demodulating so that the reduced average DC signal component in combination with the AC-coupling enhances overall performance.

57. A method according to claim **55** further comprising the steps of modulating and demodulating in one of first format defined by bi-phase PSK (BPSK) modulation at a first data rate and a second format defined by quadrature PSK (QPSK) modulation at a second data rate.

58. A method according to claim **57** further comprising the steps of:

modulating data packets to include a header at a third format defined by a predetermined modulation at a third data rate and variable data in one of the first and second formats; and

demodulating data packets by demodulating the header at the third format and for switching to the respective one of the first and second formats of the variable data after the header.

59. A method according to claim **58** wherein the predetermined modulation of the third format is differential BPSK (DBPSK), and wherein the third data rate is lower than the first and second data rates.

60. A method according to claim **55** wherein the predetermined orthogonal code is a Walsh code modified by a modulo two addition of a fixed hexadecimal code thereto.

61. A method according to claim **55** wherein the predetermined orthogonal code is a bi-orthogonal code.

* * * * *

Exhibit H

US006075814A

United States Patent [19]

Yamano et al.

[11] **Patent Number: 6,075,814**

[45] **Date of Patent: Jun. 13, 2000**

[54] **METHOD AND APPARATUS FOR REDUCING SIGNAL PROCESSING REQUIREMENTS FOR TRANSMITTING PACKET-BASED DATA WITH A MODEM**

[75] Inventors: **Larry C. Yamano**, Sunnyvale; **John T. Holloway**, Woodside; **Edward H. Frank**, Portola Valley; **Tracy D. Mallory**, Palo Alto; **Alan G. Corry**, Santa Clara; **Craig S. Forrest**; **Kevin H. Peterson**, both of San Francisco; **Timothy B. Robinson**, Boulder Creek; **Dane Snow**, Santa Clara, all of Calif.

[73] Assignee: **Broadcom HomeNetworking, Inc.**, Sunnyvale, Calif.

[21] Appl. No.: **08/853,683**

[22] Filed: **May 9, 1997**

[51] **Int. Cl.**[7] **H04B 1/38**

[52] **U.S. Cl.** **375/222**; 455/574

[58] **Field of Search** 375/222, 223; 370/311, 318; 455/557, 574, 343

[56] **References Cited**

U.S. PATENT DOCUMENTS

4,234,952	11/1980	Gable et al. .	
4,680,773	7/1987	Amundson .	
4,691,314	9/1987	Bergins et al. .	
4,756,007	7/1988	Qureshi et al. .	
4,856,030	8/1989	Batzer et al. .	
4,868,850	9/1989	Kaku et al. .	
5,463,661	10/1995	Moran, III et al.	375/222
5,491,721	2/1996	Cornelius et al.	375/222
5,544,082	8/1996	Garcia-duarte et al.	364/707
5,625,651	4/1997	Cioffi	375/354
5,636,209	6/1997	Perlman	370/281
5,745,860	4/1998	Kallin	455/574

FOREIGN PATENT DOCUMENTS

WO 86/03642	6/1986	WIPO .	
91 07038	5/1991	WIPO	H04L 29/06

OTHER PUBLICATIONS

R. Aber: "XDSL Supersharges Copper. DSL schemes promise multimegabit rates over local phone lines–and carriers and vendors are nearly ready to deliver"*Data Communications,*vol. 26, No. 3, Mar. 1997, pp. 99–100, 102, 104/105 XP000659545.

Alvarez et al.: "Data–Pump Implementation for Automatic Interworking Between Automode Modems and other CCITT & Bell Modems"*Signal Processing Theories and Applications,*Brussels, Aug. 24–27, 1992, vol. 3, No. CONF. 6, Aug. 24, 1992, pp. 1645–1648, XP000356561.

F. Gao: "DSP Algorithms and Software for Modem, Fax, and Telephony"*Electronic Design,*vol. 44, No. 11, Nay 28, 1996, pp. 123/124, 126 XP000623737.

"Digital Signal Processor Modem for Multiple telephone Lines"*IBM Technical Disclosure Bulletin,*vol. 39, No. 4, Apr. 1, 1996, pp. 263/264 XP000587492.

Primary Examiner—Don N. Vo
Attorney, Agent, or Firm—Christie, Parker & Hale, LLP

[57] **ABSTRACT**

A modem and method for operating same. A receiver circuit of the modem is coupled to receive a continuous analog signal from a communication channel. This analog signal includes both packet and idle information. The receiver circuit monitors the analog signal to detect the presence of idle information. Upon detecting idle information, the receiver circuit enters a standby mode in which the processing requirements of the receiver circuit are reduced. A burst mode protocol is also provided, in which packets of digital information are modulated by a transmitter circuit of the modem, thereby converting the packets of digital information into analog signal bursts of discrete duration. These analog signal bursts are transmitted from the transmitter circuit to a telephone line. However, the transmitter circuit does not generate any signals between the analog signal bursts. A receiver circuit monitors the telephone line to detect the analog signal bursts. Upon detecting the presence of the analog signal bursts on the telephone line, the receiver circuit demodulates the analog signal bursts using full processing capabilities of the receiver circuit. However, upon detecting the absence of the analog signal bursts on the telephone line, the demodulating function of the receiver circuit is disabled. The burst mode protocol enables multi-drop and multi-cast operation, as well as reducing required DSP resources.

12 Claims, 9 Drawing Sheets

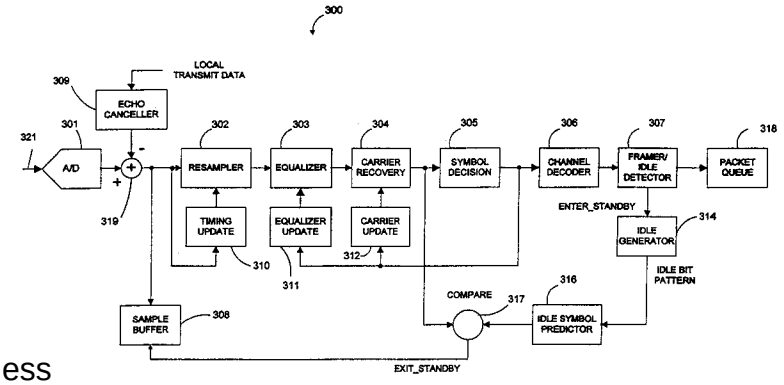

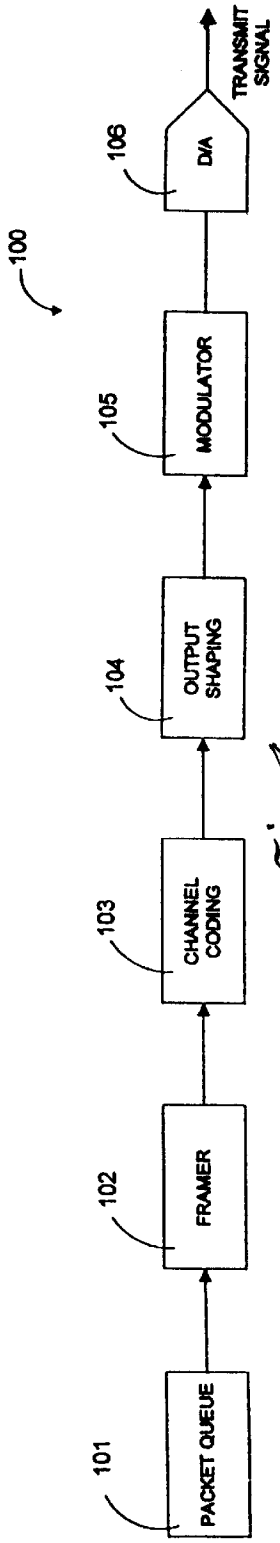

Fig. 1 (PRIOR ART)

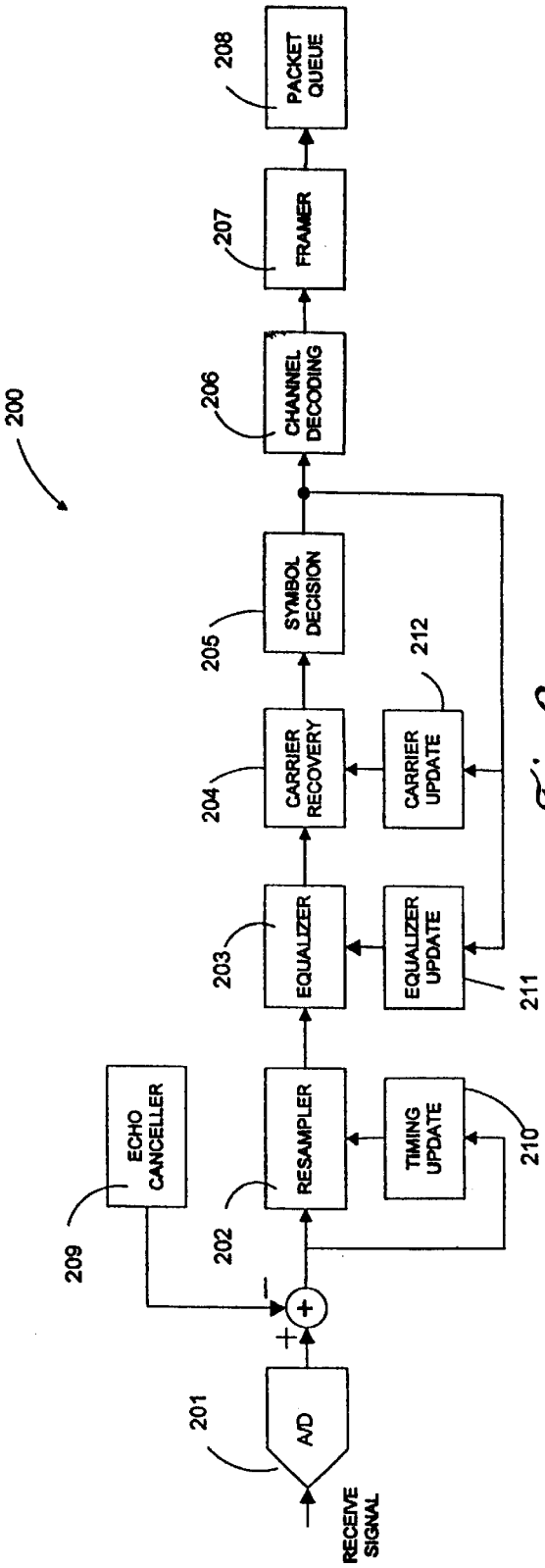

Fig. 2 (PRIOR ART)

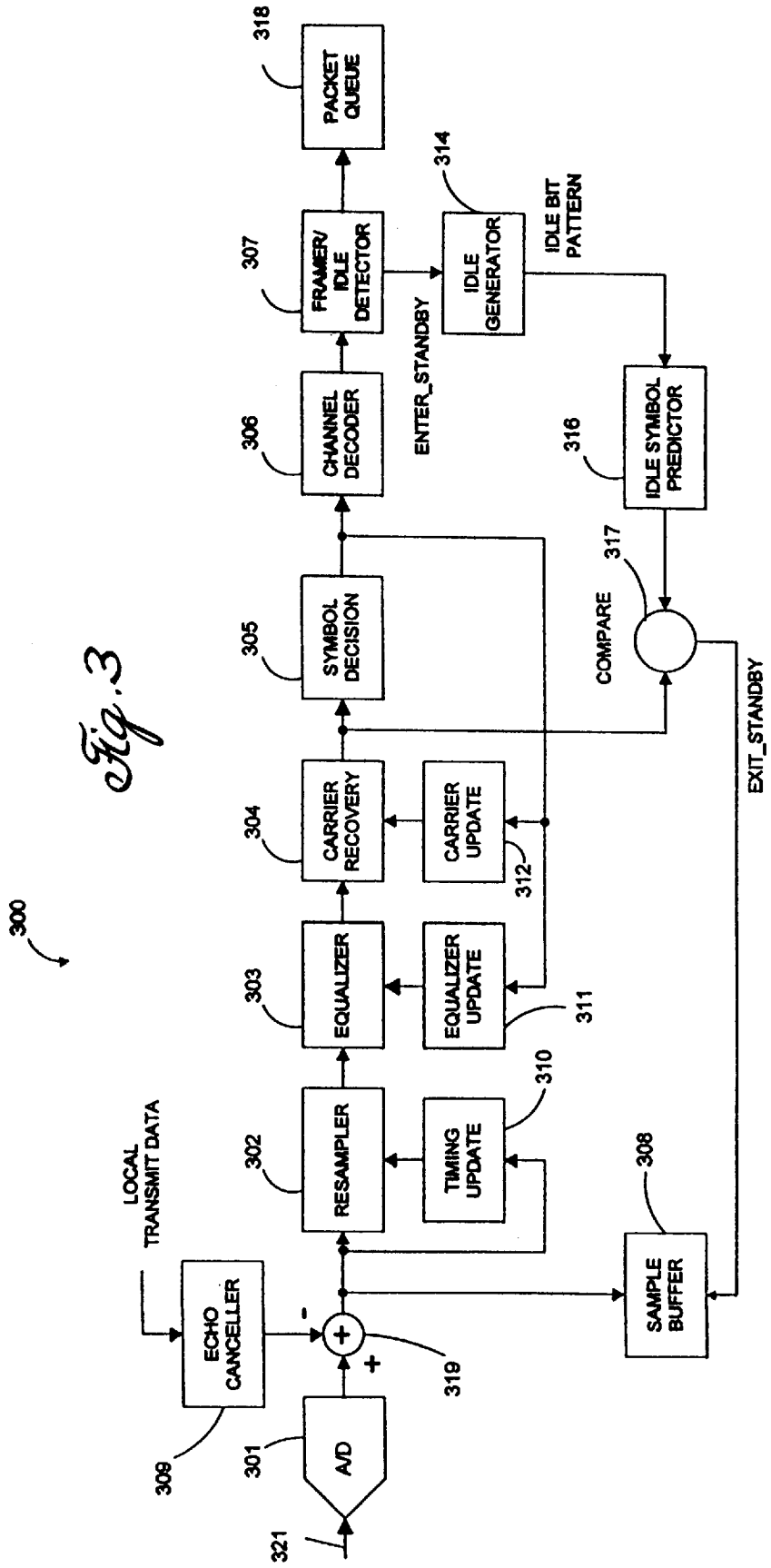
300
LOCAL TRANSMIT DATA
ECHO CANCELLER
309
A/D
301
321
RESAMPLER
302
EQUALIZER
303
CARRIER RECOVERY
304
SYMBOL DECISION
305
CHANNEL DECODER
306
FRAMER/ IDLE DETECTOR
307
PACKET QUEUE
318
TIMING UPDATE
310
EQUALIZER UPDATE
311
CARRIER UPDATE
312
319
SAMPLE BUFFER
308
ENTER_STANDBY
IDLE GENERATOR
314
IDLE BIT PATTERN
IDLE SYMBOL PREDICTOR
316
COMPARE
317
EXIT_STANDBY

Fig. 3

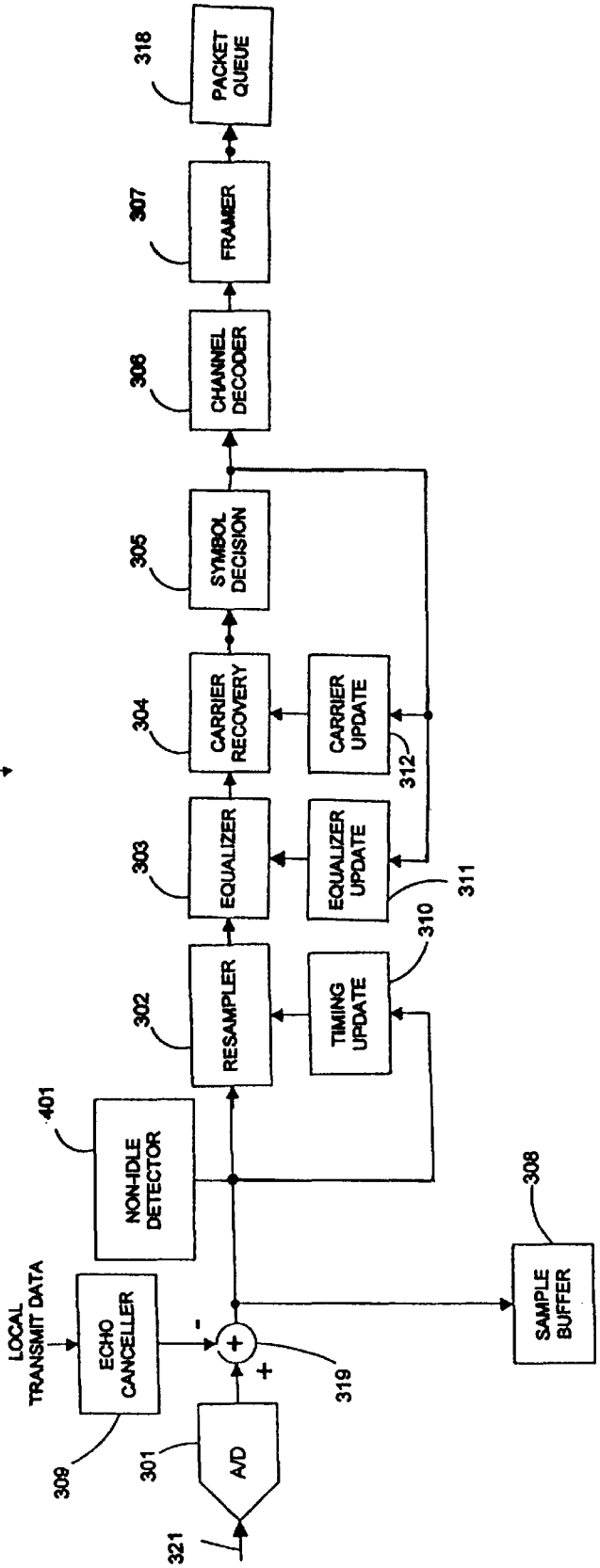
400
LOCAL TRANSMIT DATA
ECHO CANCELLER
309
NON-IDLE DETECTOR
401
A/D
301
321
-
+
319
RESAMPLER
302
TIMING UPDATE
310
EQUALIZER
303
EQUALIZER UPDATE
311
CARRIER RECOVERY
304
CARRIER UPDATE
312
SYMBOL DECISION
305
CHANNEL DECODER
306
FRAMER
307
PACKET QUEUE
318
SAMPLE BUFFER
308

Fig. 4

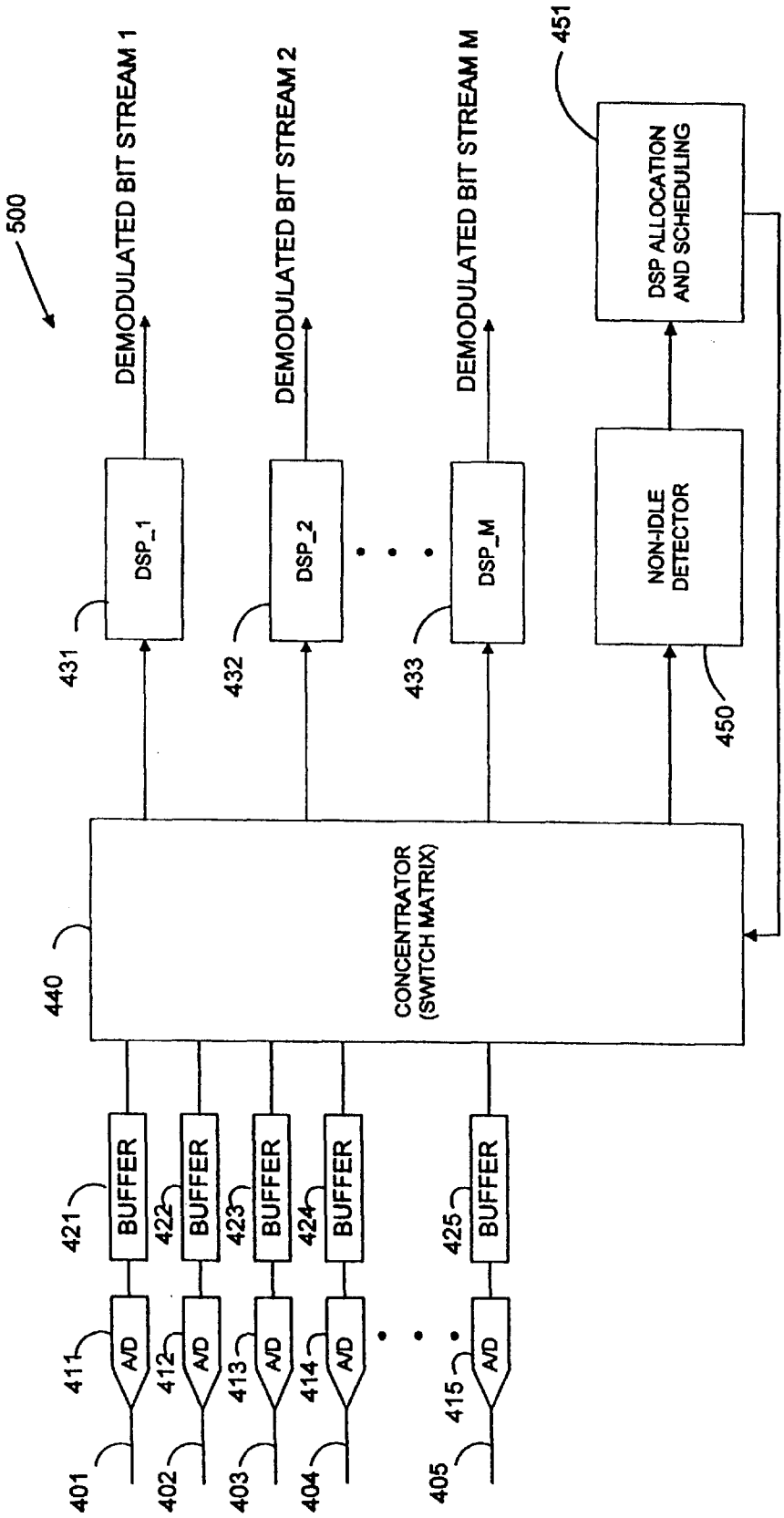
500
DEMODULATED BIT STREAM 1
DEMODULATED BIT STREAM 2
DEMODULATED BIT STREAM M
451
DSP ALLOCATION AND SCHEDULING
DSP_1
DSP_2
DSP_M
NON-IDLE DETECTOR
431
432
433
450
CONCENTRATOR (SWITCH MATRIX)
440
BUFFER
421
422
423
424
425
A/D
411
412
413
414
415
401
402
403
404
405

Fig. 5

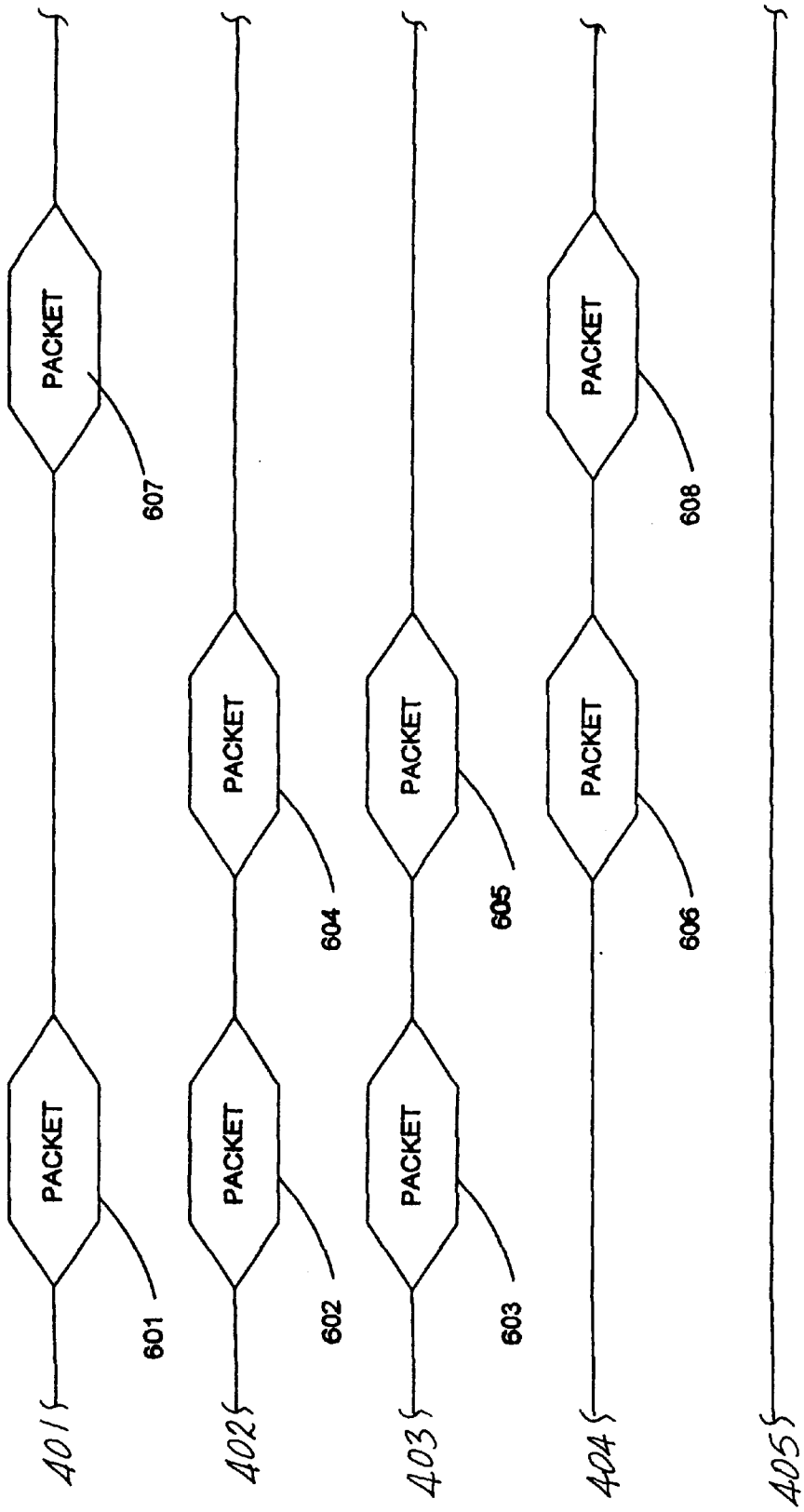
PACKET
PACKET
PACKET
PACKET
PACKET
PACKET
PACKET
PACKET
PACKET
PACKET
601
602
603
604
605
606
607
608
401
402
403
404
405

Fig. 6

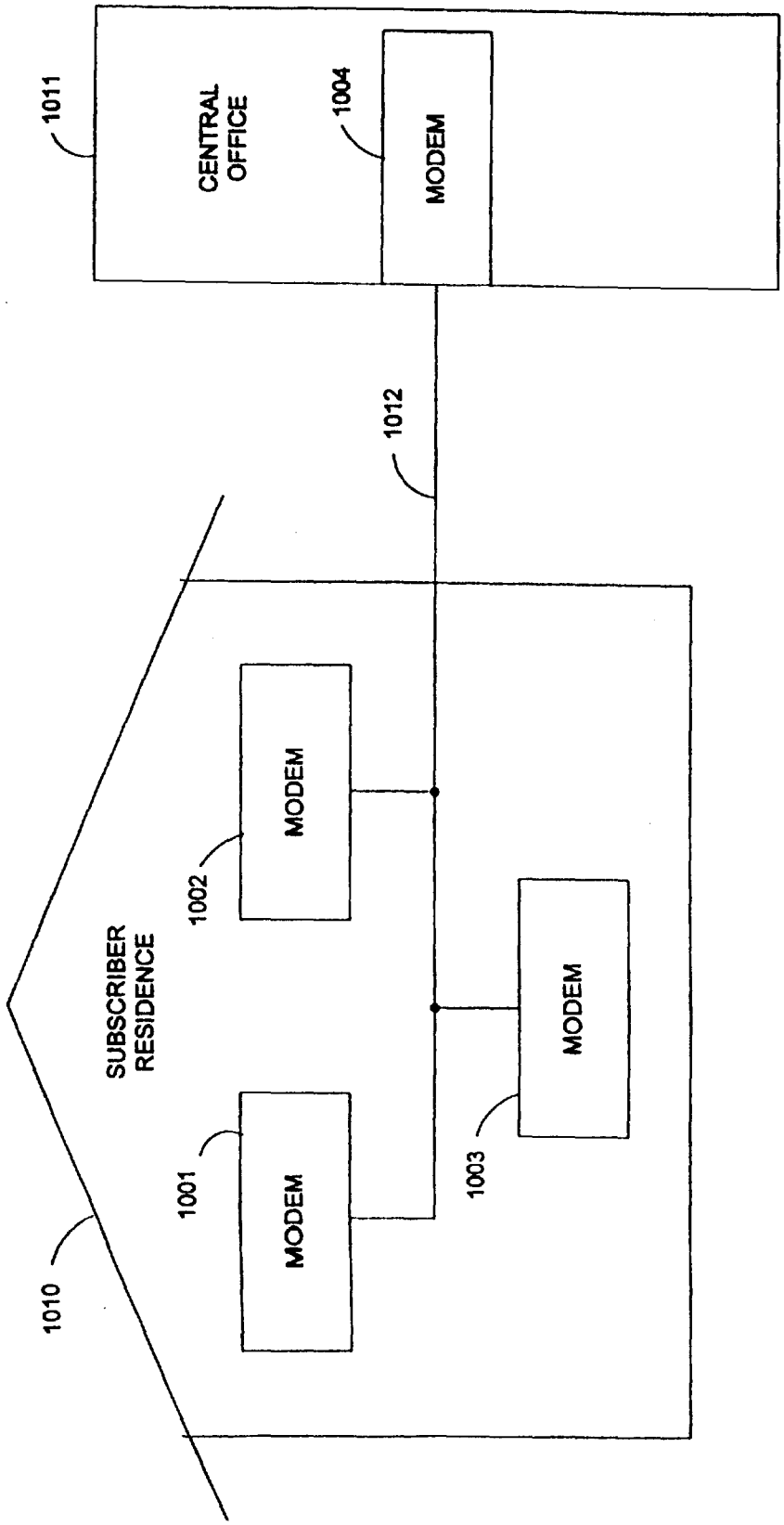
1011
CENTRAL OFFICE
1004
MODEM
1012
1010
SUBSCRIBER RESIDENCE
1001
MODEM
1002
MODEM
1003
MODEM

Fig. 7

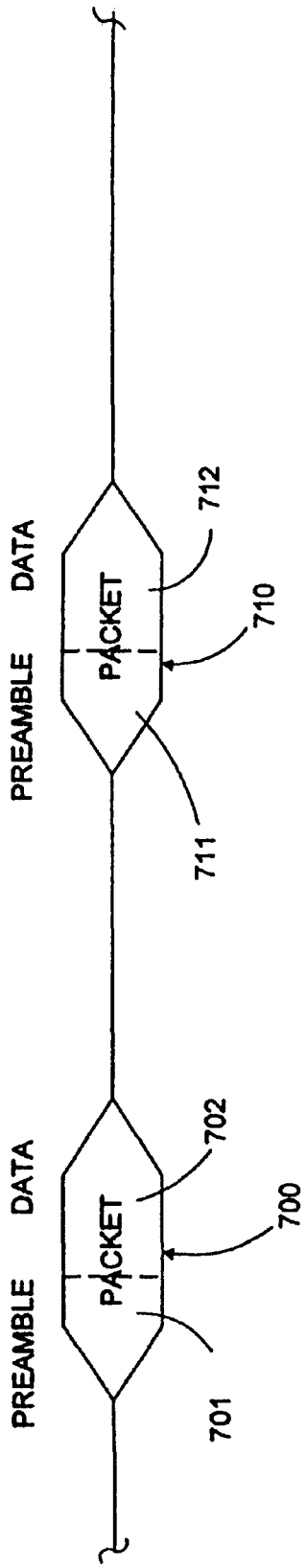
PREAMBLE
DATA
PACKET
712
710
711
PREAMBLE
DATA
PACKET
702
700
701

Fig. 8

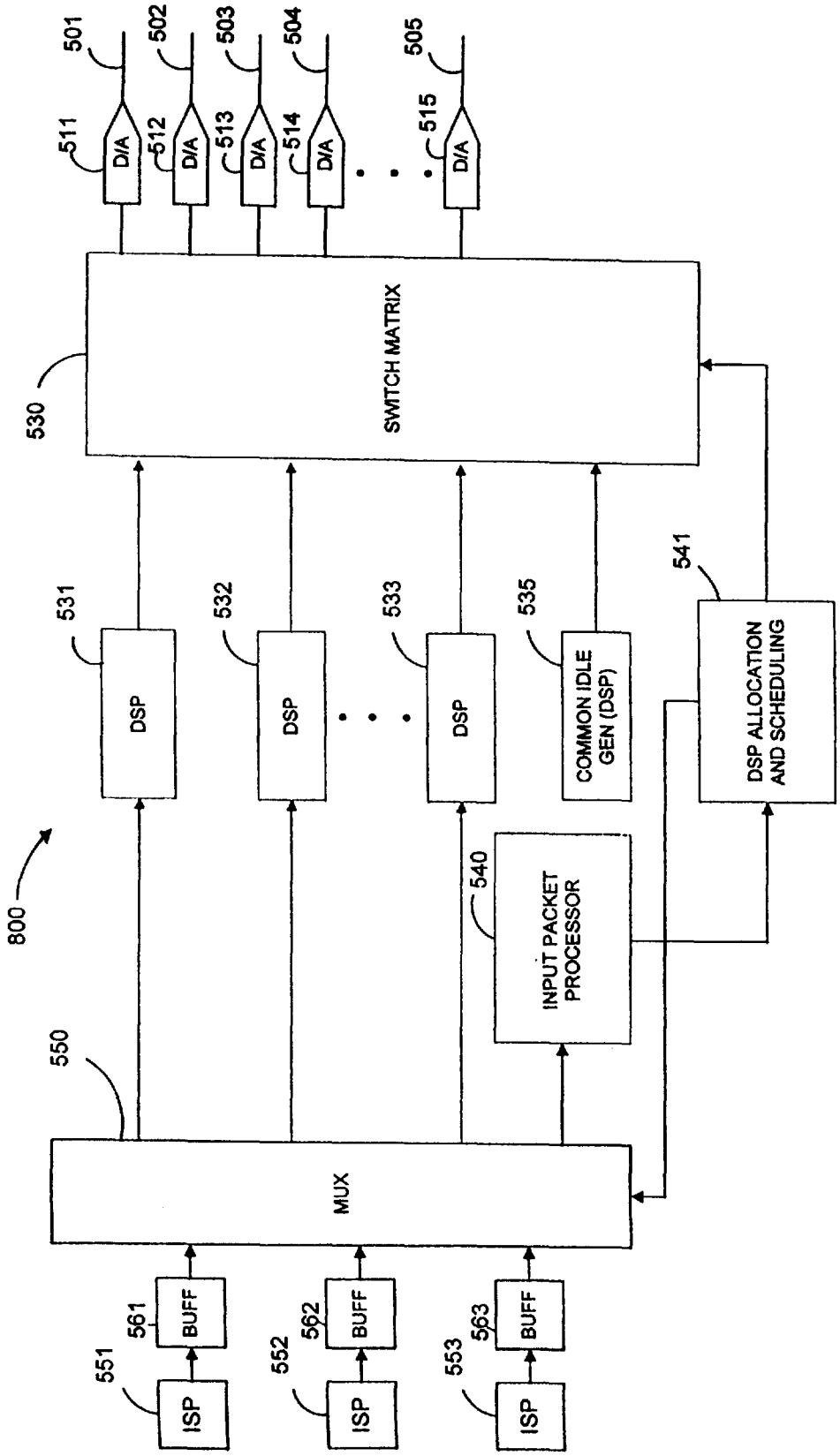
800
501
502
503
504
505
511
512
513
514
515
D/A
530
SWITCH MATRIX
531
532
533
535
541
DSP
DSP
DSP
COMMON IDLE GEN (DSP)
DSP ALLOCATION AND SCHEDULING
540
INPUT PACKET PROCESSOR
550
MUX
551
552
553
561
562
563
ISP
ISP
ISP
BUFF
BUFF
BUFF

Fig. 9

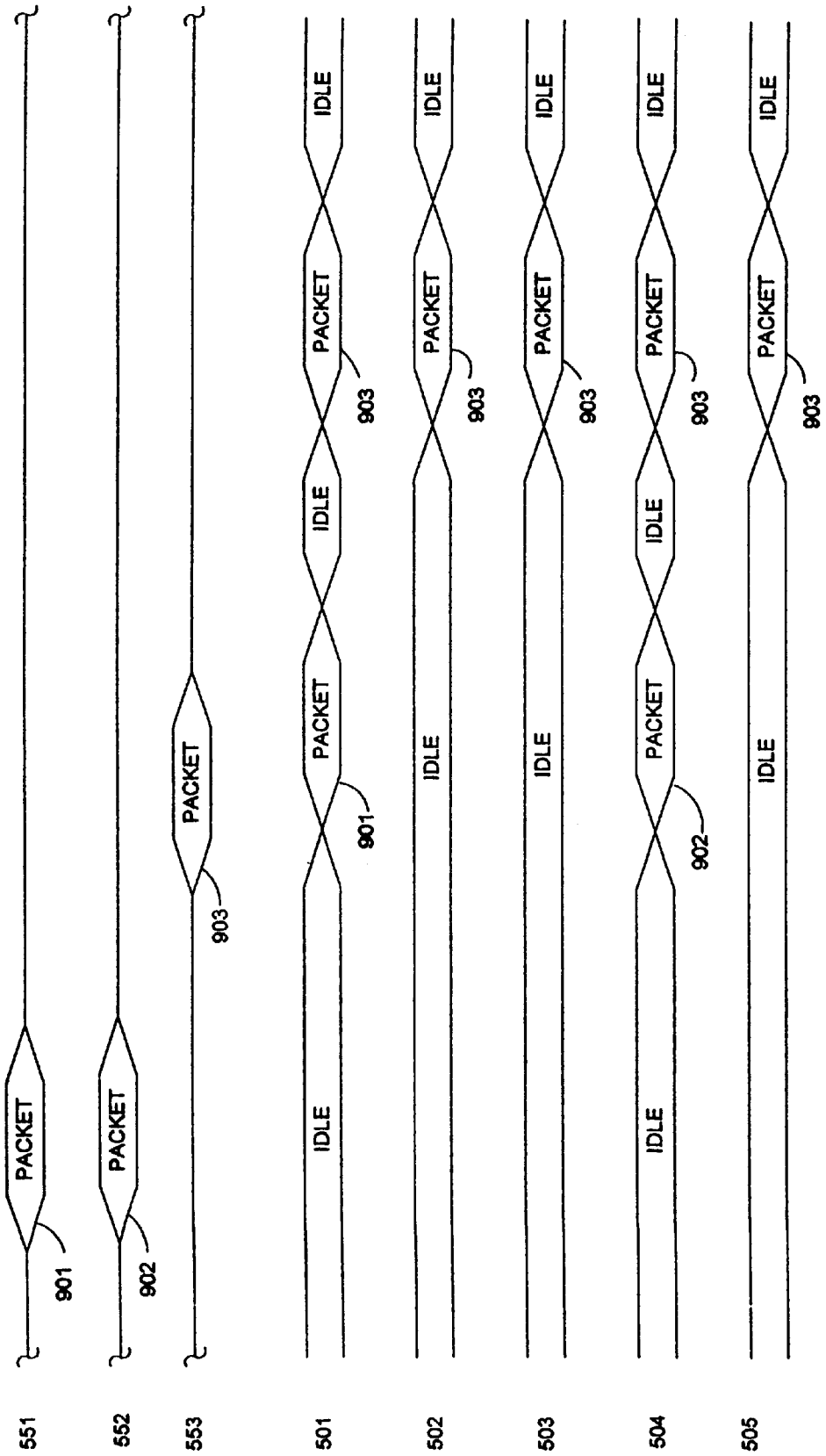

Fig. 10

METHOD AND APPARATUS FOR REDUCING SIGNAL PROCESSING REQUIREMENTS FOR TRANSMITTING PACKET-BASED DATA WITH A MODEM

BACKGROUND OF THE INVENTION

1. Field of the Invention

The present invention relates to the reduction of the required amount of signal processing in a modulator/demodulator (modem) which is transferring packet-based data or other information which is intermittent in nature on a communication channel.

2. Related Art

Modern data networks commonly use complex digital signal processing (DSP) devices called modems to transport data over communication channels. Data is typically transported via an analog transmission signal which is representative of a synchronous, constant rate bit stream. This form of communication channel is suitable for the transmission of real-time information such as voice or video. However, it is increasingly common to use modems for the transmission of packet-based information. For example, packet-based information is used to access the Internet and the World Wide Web. However, packet-based information is typically bursty in nature, with an average data rate which is often much less than the available peak data transfer rate of the communication channel.

FIG. **1** is a block diagram of a transmitter circuit **100** of a conventional modem. Transmitter circuit **100** includes packet queue **101**, framer **102**, channel coding circuit **103**, output shaper **104**, modulator **105** and digital-to-analog (D/A) converter **106**. In accordance with conventional modem protocols, transmitter circuit **100** transforms source data received by packet queue **101** into a continuous time analog transmit signal, which is provided at the output terminal of D/A converter **106**.

More specifically, within transmitter circuit **100**, the source data is grouped into packets and stored in packet queue **101**. These packets are not synchronous with respect to the modem bit clock, but arrive at packet queue **101** at random times. Framer **102** receives the packets from packet queue **101**, and in response, composes a continuous bit stream which is synchronous with respect to the modem bit clock. To create such a synchronous bit stream in response to the asynchronous packets, framer **102** generates idle information (i.e., nulls or a marking tone) when no packets are available, and generates packet data when packets are available. The packet data and idle information are delineated in such a way that a receiver circuit of a modem (see, e.g., FIG. **2**) can determine where the packet boundaries lie.

The synchronous bit stream generated by framer **102** is then coded by channel coding circuit **103**. Channel coding circuit **103** is used to compensate for noise and distortion in the communication channel. Channel coding circuit **103** provides redundant information (e.g., convolutional encoding) to allow for error correction. Channel coding circuit **103** further performs a scrambling function, as well as mapping the coded bit stream onto symbol values. The stream of symbol values generated by channel coding circuit **103** is provided to output shaper **104**.

Output shaper **104** digitally filters the stream of symbol values received from channel coding circuit **103**. Output shaper circuit **104** limits the frequency bandwidth of these symbol values within a predetermined range and may also be adjusted to partially compensate for channel distortion. The filtered sample stream provided by output shaper **104** is provided to modulator **105**, which modulates a carrier signal by the filtered sample stream. The output of modulator **105** is provided to D/A converter **106**, which generates an analog TRANSMIT signal for transmission on the communication channel (i.e., telephone line).

Transmitter circuit **100** exhibits three distinct disadvantages. First, because transmitter circuit **100** transmits constantly (either packet data or idle information), a modem can be functionally connected to only one telephone line at any given time. Moreover, only a small percentage of the total information carrying capacity of the communication channel is used to transmit data, while a large percentage of this capacity is used to transmit idle information. Additionally, transmitter circuit **100** is unsuited to multi-drop operation on a single communication channel. The first disadvantage mentioned above is particularly deleterious where a number of xDSL modems are collected together in a central office to provide data communications to a number of remote locations. In this case, each remote location requires a dedicated xDSL modem in the central office.

The analog TRANSMIT signal is transmitted over the telephone line to the telephone company central office. Within the central office, an analog to digital converter converts the analog TRANSMIT signal into a digital signal. This digital signal is multiplexed onto a digital backbone circuit and routed to a second central office location. The digital signal is demultiplexed within the second central office location and routed over a digital trunk to a digital server which performs additional processing on the digital signal.

FIG. **2** is a block diagram of a receiver circuit **200** of a conventional modem. Receiver circuit **200** includes analog-to-digital (A/D) converter **201**, resampler **202**, equalizer **203**, carrier recovery circuit **204**, symbol decision circuit **205**, channel decoding circuit **206**, framer **207**, packet queue **208**, echo canceler **209**, timing update circuit **210**, equalizer update circuit **211** and carrier update circuit **212**. Carrier recovery circuit **204** and symbol decision circuit **205** are sometimes referred to as a demodulator circuit. A/D converter **201** is coupled to the telephone line to receive the analog signal from the telephone company central office. A/D converter **201** samples this analog signal, thereby converting the analog signal into a digital signal.

The modem which includes receiver circuit **200** also includes a transmitter circuit (i.e., a near end transmitter circuit, not shown) which is similar to transmitter circuit **100**. During full duplex operation, this near end transmitter circuit may be generating a TRANSMIT signal at the same time that receiver circuit **200** is attempting to receive the analog signal from the remote (or far end) transmitter circuit **100**. Under these conditions, receiver circuit **200** may receive an echo of the TRANSMIT signal. Echo canceler **209** generates a signal which is a replica of this echo. The signal generated by echo canceler **209** is then subtracted from the output signal provided by A/D converter **201**.

Resampler **202** adjusts the raw input samples received from A/D converter **201** to match the symbol rate of the transmitter circuit **100**. Timing update circuit **211** extracts timing information which is used to control resampler **202**. Equalizer **203** compensates for linear distortions introduced by the communication channel (e.g., the telephone line). Carrier recovery circuit **204** extracts the carrier signal from the received signal and provides rough symbols (or a soft symbol decision) to symbol decision circuit **205**. Symbol decision circuit **205** quantizes the rough symbols and makes

hard decisions as to the identity of the received symbols. Equalizer update circuit **211** and carrier update circuit **212** receive the symbols provided by symbol decision circuit **205**. In response, equalizer update circuit **211** and carrier update circuit **212** determine quantizer error. In response to this quantizer error, equalizer update circuit **211** and carrier update circuit **212** adjust the coefficients used by equalizer **203** and carrier recovery circuit **204**, respectively, thereby improving the accuracy of subsequent hard symbol decisions.

Channel decoding circuit **206** uses redundant information present in the received analog signal to correct for quantizer errors. Channel decoding circuit **206** typically implements a maximum likelihood sequence estimator (MLSE) circuit (such as a Viterbi decoder or other form of error correction. Channel decoding circuit **206** provides a decoded bit stream to framer **207**. Finally, framer **207** decodes the bit stream into packet data, discarding the idle information, and loading the packets of data into packet queue **208**.

The operation of receiver circuit **200** is significantly more complex than the operation of transmitter circuit **100**. Substantial signal processing is performed by receiver circuit **200**, typically many hundreds or thousands of operations per symbol processed. Much of the signal processing is concentrated in equalizer **203**, echo canceler **209**, and channel decoding circuit **206**. A significant percentage of this signal processing is dedicated to the processing of the idle information generated by transmitter circuit **100**.

It would therefore be desirable to have a modem system which is capable of utilizing a greater percentage of the information carrying capacity of the telephone line to transfer packet based data. It would also be desirable to have a modem system which minimizes the signal processing which must be dedicated to the processing of idle symbols. It would further be desirable to have a modem system which enables a common modem to be functionally connected to a plurality of telephone lines at the same time. It would further be desirable to have a modem system which enables a common telephone line to be used with a plurality of modems in a multi-drop configuration.

SUMMARY

Accordingly, the present invention provides a method for operating a modem on a communication channel which includes the following steps. A receiver circuit of the modem is coupled to receive a continuous analog signal which is transmitted on the communication channel. This continuous analog signal includes both packet information and idle information. The receiver circuit monitors the analog signal to detect the presence of the idle information. Upon detecting the presence of the idle information, the receiver enters a standby mode. In the standby mode, the amount of processing performed by the receiver circuit is reduced.

The reduction of the amount of processing performed by the receiver circuit can be achieved by disabling and/or reducing the processing precision of selected elements within the receiver circuit. For example, a symbol decision circuit, a channel decoder and a framer within the receiver circuit can be disabled during the standby mode in one embodiment of the invention. Moreover, the processing precision of other elements, such as an echo canceler, update circuits and an equalizer can be reduced when the receiver circuit is in the standby mode.

To detect the presence of the idle information, the receiver circuit fully demodulates the analog signal to provide a digital bit stream. The digital bit stream is processed by the receiver circuit to determine when packet data ceases to be transmitted on the communication channel, and the transmission of idle information commences. At some point after the receiver circuit detects the start of the idle information, the receiver circuit enters the standby mode. At this time, various elements within the receiver circuit are disabled and/or operated with reduced precision. In addition, an idle bit pattern, which is synchronous with the idle bit pattern generated by the associated transmitter circuit, is converted to a plurality of expected idle symbols. The expected idle symbols are then compared with a plurality of soft symbols which are generated by the receiver circuit in response to the analog signal using reduced processing within the receiver circuit. The receiver circuit remains in the standby mode as long as the expected idle symbols match the soft symbols.

The receiver circuit can further store a most recent history of the analog signal in a buffer. After the standby mode is exited, this buffer can be accessed, thereby enabling the receiver circuit to reprocess the most recent history of the analog signal. This helps ensure that no packet information is lost due to the inherent delay in detecting the presence of packet information.

In accordance with another aspect of the present invention, the receiver circuit can monitor the quality of the analog signal on the communication channel and reduce the amount of processing performed by the receiver circuit if the channel quality exceeds a predetermined level. This further reduces the processing requirements of the receiver circuit.

In accordance with another embodiment of the invention, a burst mode protocol is provided for operating a modem on a telephone line. The burst mode protocol involves modulating packets of digital information by a transmitter circuit of the modem, wherein the packets of digital information are converted into analog signal bursts of discrete duration. These analog signal bursts are transmitted from the transmitter circuit to the telephone line. However, no signal is provided from the transmitter circuit to the telephone line between the analog signal bursts. In one embodiment, a non-idle state signal is appended to the beginning of the analog signal bursts by the transmitter circuit, thereby signalling the presence of the analog signal bursts.

A receiver circuit of the modem monitors the telephone line to detect the presence and absence of the analog signal bursts. This monitoring step is performed by a non-idle detector within the receiver circuit. When the non-idle detector detects the presence of the analog signal bursts on the telephone line, the non-idle detector causes the receiver circuit to demodulate the analog signal bursts using full processing capabilities of the receiver circuit. However, when the non-idle detector detects the absence of the analog signal bursts on the telephone line, the non-idle detector disables the demodulating function of the receiver circuit. This greatly reduces the processing requirements of the receiver circuit when there are no analog signal bursts present on the telephone line.

In one embodiment, the non-idle detector determines the presence and absence of the analog signal bursts on the telephone line by monitoring the telephone line for the presence and absence of carrier energy. Alternatively, the non-idle detector can monitor the telephone line for the presence and absence of a non-idle state signal provided by the transmitter circuit.

In accordance with the burst mode protocol, there are certain periods during which the transmitter circuit is not transmitting any signals. During these periods, the echo canceler of the associated local receiver circuit can be

Rembrandt Wireless
Ex. 2012
Apple Inc. v. Rembrandt Wireless Technologies, LP, IPR2020-00033
Page 607

disabled, since there will be no echo signal to cancel during these periods. This further reduces the processing requirements of the receiver circuit.

In accordance with another aspect of the present invention, the receiver circuit can monitor the quality of the analog signal bursts on the telephone line and reduce the amount of processing performed by the receiver circuit if the line quality exceeds a predetermined level. This further reduces the processing requirements of the receiver circuit.

In accordance with another embodiment of the present invention, a plurality of remote transmitter circuits, which are coupled to separate telephone lines, generate analog signal bursts in accordance with the burst mode protocol. The separate telephone lines are connected together at a central location where the analog signal bursts are multiplexed to a number of receiver circuits. A non-idle detector is coupled to receive the analog signal bursts from each of the transmitter circuits, and to detect the presence and absence of the analog signal bursts on the telephone lines. Typically, only a small number of the telephone lines will be transmitting analog signal bursts at any given time. The analog signal bursts are therefore multiplexed into a number of receiver circuits which is less than the number of telephone lines. That is, each receiver circuit can process analog signal bursts from a plurality of telephone lines. As a result, the number of receiver circuits required to handle information from a given number of telephone lines is advantageously reduced. In a particular embodiment, different sets of update coefficients are enabled within the receiver circuits, depending upon which telephone line is currently coupled to the receiver circuit.

The present invention also includes a method for operating a plurality of modems on a single telephone line (i.e., multi-drop operation). This method includes the steps of (1) modulating packets of digital information by the modems, wherein the packets of digital information are converted into analog signal bursts of discrete duration, (2) transmitting the analog signal bursts from the modems to the telephone line, (3) providing no signal from the modems to the telephone line between the analog signal bursts, and (4) arbitrating the transmitting of the analog signal bursts from the modems to the telephone line such that only one modem is transmitting analog signal bursts to the telephone line at any given time.

In one variation of the multi-drop method, each of the analog signal bursts includes a preamble and a corresponding main body. Each preamble is transmitted in accordance with a predetermined first modem protocol. However, the main bodies can be transmitted in accordance with different modem protocols which are different than the first modem protocol. For example, the different modem protocols may implement different data rates, modulation formats and/or protocol versions. The modem protocol associated with each of the main bodies is identified by information included in the corresponding preamble. This variation enables devices having different operating capabilities (e.g., personal computers and smart appliances) to be operably coupled to the same telephone line in a multi-drop configuration.

The present invention further includes a method for implementing a multi-line network access circuit. In this embodiment, digital data packets are transmitted from a plurality of sources (e.g., ISPs) to a multi-line network circuit. The digital data packets do not include idle information. The multi-line network access circuit identifies the telephone lines associated with the digital data packets using a destination address monitor. Digital data packets from [illegible] are multiplexed to a common digital signal processing (DSP) resource. This common DSP resource modulates digital data packets from different sources. The multi-line network access circuit then de-multiplexes the modulated digital data packets onto telephone lines corresponding to the destination addresses. In one variation, a common idle generator within the multi-line network access circuit is used to generate common idle information for each of the telephone lines. In another variation, a non-idle state signal generator within the multi-line network access circuit is used to generate non-idle state signalling for each of the telephone lines.

Yet another embodiment of the present invention provides a method of implementing a multi-cast network access circuit. In accordance with this method, a digital data packet is transmitted from a source to the multi-cast network access circuit. In this embodiment, the digital data packet does not include idle information. The digital data packet identifies a plurality of destination addresses to which the digital data packet is to be transmitted. The digital data packet is routed to a digital processing resource and modulated. The modulated digital data packet is demultiplexed to a plurality of telephone lines which correspond to the destination addresses, thereby completing the multi-cast operation.

The present invention will be more fully understood in view of the following detailed description taken together with the drawings.

BRIEF DESCRIPTION OF DRAWINGS

FIG. **1** is a block diagram of a transmitter circuit of a conventional modem;

FIG. **2** is a block diagram of a receiver circuit of a conventional modem;

FIG. **3** is a block diagram of a receiver circuit of a modem in accordance with one embodiment of the invention;

FIG. **4** is a block diagram of a receiver circuit of a modem in accordance with a burst-mode protocol of the present invention;

FIG. **5** is a block diagram of a multi-line network access circuit which can be located in a central office in accordance with one embodiment of the invention;

FIG. **6** is a schematic diagram of packet data received on the multiple lines of the multi-line network access circuit of FIG. **5** in accordance with one embodiment of the invention;

FIG. **7** is a schematic diagram of a multi-drop configuration which includes modems in a subscriber's residence and a modem in the telephone company central office;

FIG. **8** is a schematic representation of packet information which is transmitted by transmitter circuits in accordance with the burst-mode protocol of the present embodiment;

FIG. **9** is a block diagram of a multi-line network access circuit in accordance with another embodiment of the present invention; and

FIG. **10** is a schematic diagram of packet information received by and transmitted from the multi-line network access circuit of FIG. **9**.

DETAILED DESCRIPTION

FIG. **3** is a block diagram of a receiver circuit **300** of a modem in accordance with one embodiment of the present invention. Receiver circuit **300** includes A/D converter **301**, resampler **302**, equalizer **303**, carrier recovery circuit **304**, symbol decision circuit **305**, channel decoder **306**, framer/idle detector **307**, sample buffer **308**, echo canceler **309**, timing update circuit **310**, equalizer update circuit **311**,

carrier update circuit **312**, idle generator **314**, idle symbol predictor **316**, comparator circuit **317**, packet queue **318** and summing node **319**. In combination, carrier recovery circuit **304** and symbol decision circuit **305** form a demodulator. In the described embodiment, A/D converter **301** is implemented by a coder/decoder (codec) chip, while the remaining elements of receiver circuit **300** are implemented by a digital signal processor (DSP). In other embodiments, the elements of receiver circuit **300** can be implemented by other means, such as a general purpose processor. Receiver circuit **300** is coupled to receive an analog RECEIVE signal from communication channel **321**, which in the described embodiment, is a telephone line. It is understood that other communication channels, such as twisted pair other than a telephone line, wireless, coaxial cable, infrared or optical, can be used in other embodiments.

In the described embodiment, the RECEIVE signal received on communication channel **321** is an analog signal in accordance with a conventional modem protocol, such as xDSL or a voice band modem protocol. For example, this analog RECEIVE signal could originate from transmitter circuit **100** (FIG. **1**) in the manner previously described. Thus, the analog RECEIVE signal received on communication channel **321** includes modulated packet data as well as idle information which is interleaved with the packet data.

A/D converter **301** samples the analog RECEIVE signal, thereby converting the analog RECEIVE signal into a digital signal. This digital signal is provided to a positive input terminal of summing node **319**. Echo canceler **309** uses the local transmit signal to adaptively predict the echo signal on communication channel **321**. As previously described, an echo of the local transmit signal may be present if the modem which includes receiver circuit **300** is operating in full duplex mode. Echo canceler **309** applies the predicted echo signal to the negative input terminal of summing node **319**, thereby canceling the echo signal from the digital signal.

The digital signal output by summing node **319** is provided to a conventional resampler **302**. Resampler **302** interpolates this digital signal to generate samples which match the symbol rate of the transmitter circuit. Timing update circuit **310** monitors the digital signal provided by summing node **319**. Timing update circuit **310** is a conventional element which runs a control loop to extract symbol timing information from this digital signal. This symbol timing information is provided to resampler **302**, thereby enabling resampler **302** to control the sampling process as necessary.

The digital signal output by summing node **319** is further provided to sample buffer **308**. Sample buffer **308** is a dual-port first-in, first-out (FIFO) circular buffer which stores a most recent history of the digital signal provided by summing node **319**. In the described embodiment, the information stored in sample buffer **308** is representative of a plurality N of the most recent symbols. In one embodiment, N is equal to eight, although N can be any integer value. In other embodiments N is much larger, having a magnitude on the order of hundreds or even thousands. The operation of sample buffer **308** is described in more detail below.

The raw input samples are routed from resampler **302** to adaptive equalizer **303**. Adaptive equalizer **303** is a conventional element which modifies the raw input samples to compensate for linear distortions introduced by communication channel **321**. To accomplish this, equalizer **303** processes the raw input samples using a plurality of equalization coefficients which are updated periodically within equalizer update circuit **311** based on quantization errors measured at the output of the symbol decision circuit **305**.

Equalizer **303** provides a stream of equalized digital samples to carrier recovery circuit **304**. Carrier recovery circuit **304** is a conventional element which extracts the carrier signal from the equalized digital samples and, for each digital sample, provides a soft decision (i.e., a best estimate) concerning the identity of the corresponding symbol. The symbols achieved by the soft decision are hereinafter referred to as soft symbols. The soft symbols are transmitted to symbol decision circuit **305**.

Symbol decision circuit **305** is a conventional circuit which quantizes the soft symbols provided by carrier recovery circuit **304**, thereby making a hard decision as to the identity of the received symbols. The symbols achieved by the hard decision are hereinafter referred to as hard symbols. The hard symbols are fed back to equalizer update circuit **311** and carrier update circuit **312**. In response, equalizer update circuit **311** and carrier update circuit **312** determine quantizer error. In response to the quantizer error, equalizer update circuit **311** and carrier update circuit **312** adjust the processing coefficients used by equalizer **303** and carrier recovery circuit **304**, respectively, thereby improving the accuracy of the hard decisions made by symbol decision circuit **305**.

The hard symbols generated by symbol decision circuit **305** are also provided to conventional channel decoding circuit **306**. Channel decoding circuit **306** uses redundant information in present in the RECEIVE signal to correct for quantizer errors. Channel decoding circuit **306** typically implements a maximum likelihood sequence estimator (MLSE) circuit such as a Viterbi decoder or some other form of error correction. Channel decoding circuit **306** provides a decoded bit stream to framer/idle detector **307**.

Framer/idle detector **307** monitors the digital bit stream to determine if the digital bit stream is representative of an idle bit pattern. When the digital bit stream is representative of an idle bit pattern, the digital bit stream is said to represent an IDLE state. When the digital bit stream is not representative of an idle bit pattern (i.e., the digital bit stream is representative of packet data), the digital bit stream is said to represent a DATA state. To decrease the chance of falsely detecting the presence of an idle bit pattern, the determination can be postponed until several successive symbols of the idle bit pattern have been detected by framer/idle detector **307**.

If framer/idle detector **307** detects that the digital bit stream is representative of packet data (i.e., a DATA state exists), then framer/idle detector **307** de-asserts a control signal (ENTER_STANDBY) to disable idle generator circuit **314**. Framer/idle detector **307** also generates a digital bit stream which is representative of the received packet data. This digital bit stream is provided to packet queue **318** for further processing. Framer/idle detector **307** is a conventional circuit element well known to those of ordinary skill in the art.

If framer/idle detector **307** determines that the digital bit stream provided by channel decoding circuit **306** is representative of an idle bit pattern (i.e., an IDLE state exists), then receiver circuit **200** enters a standby mode in the following manner. Framer/idle detector **307** does not provide any output bit stream to packet queue **318**. Framer/idle detector **307** asserts the ENTER_STANDBY signal which enables idle generator circuit **314**. In response, idle generator circuit **314** generates an idle bit pattern as defined by the applicable modem protocol. This idle bit pattern is synchro-

nous with the pattern that receiver circuit **300** expects to receive from the corresponding transmitter circuit.

The idle bit pattern generated by idle generator circuit **314** is also provided to idle symbol predictor circuit **316**. In response to the idle bit pattern, idle symbol predictor **316** generates a sequence of expected idle symbols in accordance with the applicable modem protocol. Thus, the idle bit pattern is converted into a stream of expected idle symbols. Alternatively, where the stream of expected idle symbols repeats with a reasonable period, the stream of expected idle symbols can be pre-computed and stored in a table within receiver circuit **300**, and accessed when framer/idle detector **307** detects an idle bit pattern.

The sequence of expected idle symbols is provided to a first input terminal of comparator circuit **317**. The second input terminal of comparator circuit **317** is coupled to carrier recovery circuit **304**, such that the soft symbols generated by carrier recovery circuit **304** are provided to the second input terminal of comparator circuit **317**. Comparator circuit **317** compares the expected idle symbols received from idle symbol predictor circuit **316** with the soft symbols received from carrier recovery circuit **304**. If comparator circuit **317** detects a match, comparator circuit **317** allows processing to continue in standby mode by de-asserting a control signal, EXIT_STANDBY. The de-asserted EXIT_STANDBY signal causes receiver circuit **300** to remain in the standby mode. In this manner, the soft symbols provided by carrier recovery circuit **304** are used make the determination as to whether the RECEIVE signal is representative of an IDLE state.

Because the soft symbols are used to determine whether the RECEIVE signal is representative of an IDLE state, the following elements of receiver circuit **300** can be disabled during the standby mode: symbol decision circuit **305**, channel decoder **306**, framer/idle detector **307**, equalizer update circuit **311** and carrier update circuit **312**. As a result, the processing requirements of receiver circuit **300** are greatly reduced when receiver circuit **300** operates in the standby mode. In the described embodiment, the symbol decision circuit **305**, channel decoder **306**, framer/idle detector **307**, equalizer update circuit **311** and carrier update circuit **312** are disabled in response to the asserted ENTER_STANDBY control signal, and are enabled in response to the asserted EXIT_STANDBY control signal. To further reduce the processing requirements of receiver circuit **300** during the standby mode, equalizer **303**, carrier recovery circuit **304**, timing update circuit **310** and echo canceler **309** can be operated in a reduced precision processing mode while receiver circuit **300** is operating in the standby mode. Even further reductions are possible by applying well understood sequence estimation concepts. That is, the quality of processing required to make the soft decision can be greatly relaxed during standby mode.

More specifically, the length of echo canceler **309** can be significantly reduced during standby mode because the resulting uncompensated error will be compensated for by the vastly increased window of comparison implemented by comparator circuit **317**. In addition, the frequency of updates within echo canceler **309** can also be reduced. The length of echo canceler **309** can also be reduced since distant echos may now be small enough to be ignored. Similarly, the tolerance requirements for timing update circuit **310** can be greatly relaxed and the length of resampler **302** can be shortened. In many cases, equalizer **303** can be disabled during standby mode. In most other cases, equalizer **303** can be implemented with just a few taps of a FIR filter during standby mode. When the carrier signal is locked to the timing, then the carrier tracking performed by carrier recovery circuit **304** may not be necessary if the target C/I ratio is reduced to approximately **12** dB to provide an acceptable level of phase jitter. If carrier recovery circuit **304** includes a phase locked loop (PLL) to track a center frequency of the signal provided by equalizer **303**, then the update rate of the PLL may be reduced.

An example of the reduced processing implemented during the standby mode is described in more detail below. The full and reduced precision processing modes of equalizer **303**, carrier recovery circuit **304** and echo canceler **309** can be entered and exited in response to the ENTER_STANDBY and EXIT_STANDBY control signals.

When comparator **317** determines that a soft symbol provided by carrier recovery circuit **304** does not correspond with an expected idle symbol provided by the idle symbol predictor circuit **316**, comparator **317** asserts the EXIT_STANDBY signal. The asserted EXIT_STANDBY signal is also used to cause receiver circuit **300** to exit the standby mode. Upon exiting the standby mode, symbol decision circuit **305**, channel decoder **306**, framer/idle detector **307**, equalizer update circuit **311** and carrier update circuit **312** are enabled. In addition, equalizer **303**, carrier recovery circuit **304** and echo canceler **309** are returned to their full processing capabilities.

The asserted EXIT_STANDBY signal also causes the most recent history of the digital signal stored in sample buffer **308** to be provided to resampler **302**. In the described example, sample buffer **308** initially provides the symbol which was received N symbols before the soft symbol which failed to match the expected idle symbol. Processing then proceeds forward from this previous sample. By reprocessing the most recent history of the digital signal, the probability that useful data is thrown away because of failure to detect the end of the IDLE state is minimized. Moreover, reprocessing the most recent history of the digital signal enables the timing, carrier and equalization update circuits to be restored to the accuracies necessary to operate at the agreed upon transmission rate.

In the foregoing example, receiver circuit **300** must process N symbols of the most recent history of the digital signal two times, once at reduced processing capability and once at full processing capability. However, this re-processing enables many (typically thousands) of idle symbols to be processed at a reduced processing capability. The overall result is a large reduction in the overall processing requirements.

In the foregoing manner, receiver circuit **300** is only required to operate at full processing capability when the RECEIVE signal transmits symbols which are representative of data. In a packet based data transmission environment, this can greatly reduce the percentage of time during which receive circuit **300** must operate at full processing capability. This reduced processing load on receiver circuit **300** can allow for other processing, such as non-communication processing, to be effected by the same processing resource used by receiver circuit **300**, or can be used to reduce power consumption of the processing element. In another embodiment, the reduced processing load on receiver circuit **300** can enable a single processing resource to perform standby idle prediction and detection for multiple lines. In this embodiment, the single processing resource signals other processing resources to schedule for full demodulation processing when the received signal enters the DATA state.

One example of the reduced processing possible during standby mode will now be described. For example, consider

a quadrature amplitude modulation (QAM) modem. Assume that all symbols have the same probability of being transmitted (although this assumption is not necessary to practice the present invention). Each of the symbols can be defined as having a particular location (or signal point) within a signal constellation. The signal points are separated by predetermined distances within the signal constellation. In the present embodiment, the idle symbol predictor **316** determines the location of the next expected idle symbol. Idle symbol predictor **316** then defines a predicted region which laterally surrounds the location of this expected IDLE symbol. The predicted region has a radius, $R_{PREDICTED}$. If the soft symbol identified by carrier recovery circuit **304** lies within the predicted region, then this soft symbol will be deemed to have been the expected IDLE symbol. Note that once the transmission of useful data symbols resumes, there is still a chance that the initial data symbol will lie within the predicted region of the next expected IDLE symbol. However, if the entire signal constellation is considered, the probability of the initial data symbol lying within the predicted region of the expected idle symbols can be made small. As a result, the radius $R_{PREDICTED}$ can be made relatively large, while the chances of incorrectly remaining in the standby mode can be made relatively small.

For example, assume that "Area_predicted" is the area of the predicted region (i.e., the area of the region within $R_{PREDICTED}$ of the expected IDLE symbol), and that "Area_total" is the area of the entire signal constellation. Further assuming that for normal useful data transmission the received symbols would be distributed uniformly over Area_total, then the probability of missing the transition from an IDLE state to a DATA state is approximately:

$$P_1[\text{miss}]=\text{Area_predicted}/\text{Area_total}$$

However, the probability of N useful data symbols tracking N expected IDLE symbols (where N is an integer greater than one) is approximately:

$$P_N[\text{miss}]=(\text{Area_predicted}/\text{Area_total})^N$$

Using sample buffer **308** to maintain a recent history of N samples minimizes the likelihood of missing transitions from the IDLE state to the DATA state.

A specific example is provided below with hypothetical numbers. If Area_predicted/Area_total=¼ and a sequence of 8 symbols is considered (i.e., N=8), then,

$$P_N[\text{miss}]=(1/4)^8=1.5\times10^{-5}$$

Furthermore, this ratio of Area_predicted/Area_total implies that the quality of processing need only be roughly equivalent to that of quadrature phase shift keying (QPSK).

If receiver circuit **300** fails to detect the transition from an IDLE state to a DATA state within N symbols, the initial data packet would be lost. However, the modem protocol, such as V.42, or a higher level modem protocol would merely request retransmission of the initial data packet. The end result is a brief degradation in data throughput. Most network protocols require that packets have a minimum size, increasing the likelihood of detection of the initial data packet.

The probability of falsely detecting that a DATA state exists (when an IDLE state actually exists) can be calculated as follows. First, assume a carrier to interference ratio (C/I) of 10.5 dB (with interference being defined as noise plus interference plus equalizer mismatch plus other forms of processing degradations, primarily resulting from reduced processing. Therefore, the probability of falsely detecting a DATA state is approximately 1×10^{-3}, based on error probability curves for QPSK modulation. The error probability curves for QPSX modulation can be used because QPSK modulation, like the described example, exhibits an Area_Predicted/Area_Total ratio of ¼. Because there is a relatively low probability of falsely detecting a DATA state, in one variation of the invention, a single detected data symbol causes receiver circuit **300** to transition to the DATA state.

Moreover, if a soft symbol which is actually representative of an expected idle symbol is erroneously determined to be located outside of the predicted region, then receiver circuit **300** merely exits the standby mode resumes more accurate processing of the RECEIVE signal. If the RECEIVE signal is indeed representative of an IDLE state, receiver circuit **300** subsequently detects the IDLE state and re-enters the standby mode. The end result is a brief degradation in computational efficiency.

In the present example, 99.9% (i.e., $1-(1\times10^{-3})$) of the IDLE state should be detectable. Furthermore, sequential estimation techniques across a set of samples can be used to further decrease the error in idle estimation, if necessary. The associated transmitter circuit can enhance detection of the DATA states by prefixing new packet transmissions with a preamble to trigger comparator **317**.

It is estimated that the previously described optimizations provide an order of magnitude reduction in processing within receiver circuit **300** during the standby mode.

In another embodiment of the present invention, receiver circuit **300** is modified such that comparator **317** receives the equalized digital samples provided by equalizer circuit **303**, rather than the soft symbols provided by carrier recovery circuit **304**. In this embodiment, conventional differential processing can be performed on the equalized digital samples provided by equalizer circuit **303**. This differenitial processing determines the actual differences between successive equalized digital samples. In this embodiment, idle symbol predictor **316** is modified to provide predicted differences between successive IDLE symbols (rather than predicted IDLE symbols). Comparator **317** then compares the actual differences provided by equalizer **303** with the predicted differences provided by idle symbol predictor **316** to determine whether the signal received on communication channel **321** is representative of an IDLE state or a DATA state.

The concept of idle detection and idle symbol prediction can be applied to other modulation types in addition to QAM. One example of an alternative modulation type is carrier-less amplitude and phase (CAP) modulation. Another example is pulse amplitude modulation (PAM). PAM can be geometrically viewed as a one dimensional constellation, where the 'areas' described for in QAM example convert to 'line lengths' in PAM.

For multi-carrier techniques such as discrete multi-tone modulation (DMT) (also known as orthogonal frequency division multiplexing, or OFDM), there is, as in the QAM example, a channel decoding stage out of which the IDLE state can be detected. Assuming that the remote transmitter circuit is a single channel and continues to transmit idle information, subsequent idle symbols at the receiver circuit can be predicted.

Once the IDLE state has been detected, a standby mode can be entered during which only one (or a small subset) of the multiple carriers is processed. If the output of this reduced processing matches properly with the expected continuation of the idle sequence, then the standby mode is maintained. Otherwise, the standby mode is exited and full

processing is resumed from a point far enough back in the input sample buffer to guarantee correct demodulation of the onset of useful data.

In accordance with another embodiment of the invention, the quality of the communication channel **321** can be determined by monitoring various elements within receiver circuit **300**. For example, error correction circuitry present in channel decoder **306** can be monitored to determine the quality of the established communication channel **321** (i.e., whether a large or small amount of error correction is being performed). Another measure of the signal quality is the mean of the square of the quantizer error (i.e., the difference between the input and the output of the symbol decision circuit **305**). If the communication channel **321** is determined to be a high quality connection, then the processing within receiver circuit **300** can be reduced. For example, equalizer **303**, carrier recovery circuit **304**, timing update circuit **310** and echo canceler **309** can be operated in a reduced precision processing mode when a high quality communication channel **321** exists. The processing performed by receiver circuit **300** in the reduced precision mode in accordance with this variation is approximately 50 to 25 percent of the processing required in the full processing mode.

In a variation of this embodiment, the quality of the communication channel **321** can be determined using higher protocol layers, and the processing precision of receiver circuit **300** can be adjusted accordingly.

Where a given telephone line is intentionally configured to use reduced symbol rates or relaxed number of bits per symbol, as in the case where subscriber data rates are adjusted according to class of service, then processing within receiver circuit **300** can be reduced.

In another variation, echo canceler **309** can monitor the coefficients which used to generate the echo signal. There are typically a predetermined number of coefficients used to generate the echo signal. If certain coefficients are small enough to be ignored, the number of coefficients used to generate the echo signal can be reduced (with the insignificant coefficients being ignored). As a result, the processing requirements of echo canceler **309** are advantageously reduced.

The previously described methods are based on modem formats that continuously signal on a communication channel, using distinguished idle symbol sequences within the modulation to indicate the absence (and presence) of data.

Alternative Embodiments

In accordance with another embodiment of the present invention, the transmitter and receiver circuits provide for direct support of packet traffic, as opposed to continuous bit streams, using low-level modem protocols. The protocol which facilitates this packet traffic will hereinafter be referred to as a burst-mode protocol. In the burst-mode protocol, the transmitter circuit does not transmit idle information as previously described in connection with transmitter circuit **100** (FIG. **1**). Instead, the transmitter circuit transmits a predetermined non-idle state signal to indicate that packet data is about to be transmitted, and then transmits the packet data. If the transmitter circuit is not transmitting the predetermined non-idle state signal or packet data, the transmitter circuit does not transmit any signals on the communication channel. Stated another way, the transmitter circuit does not transmit idle information. The transmitter circuit only sends information when there is meaningful packet data available to be sent.

FIG. **4** is a block diagram of a receiver circuit **400** in accordance with the burst-mode protocol. Many of the elements of receiver circuit **400** are similar to elements previously described in connection with receiver circuit **300** (FIG. **3**). Thus, similar elements in FIGS. **3** and **4** are labeled with similar reference numbers. Thus, receiver circuit **400** includes A/D converter **301**, resampler **302**, equalizer **303**, carrier recovery circuit **304**, symbol decision circuit **305**, channel decoder **306**, framer/idle detector **307**, sample buffer **308**, echo canceler **309**, timing update circuit **310**, equalizer update circuit **311**, carrier update circuit **312** and packet queue **318**. In addition, receiver circuit **400** includes a non-idle detector circuit **401**, which is coupled to receive the output signal provided by summing node **319**.

In the burst-mode protocol, the presence of packet data (i.e., an analog signal burst) is immediately preceded by a predetermined signalling on the communication channel (i.e., a non-idle state signal). This signalling is selected to be detected by non-idle detector **401** without the computational complexity of full demodulation. Three such signalling schemes are discussed below.

First, an easily detected signal, such as a pure tone, can be used to signal the presence of packet data (hereinafter referred to as a DATA state) and the absence of packet data (hereinafter referred to as a NO DATA state). In the described example, the easily detected signal is prefixed to the onset of the transmission of packet data. Upon detecting the easily detected signal, non-idle detector **401** enables the full processing mode of receiver circuit **400**, thereby causing receiver circuit **400** to perform full demodulation on the incoming RECEIVE signal. After the packet data has been received, non-idle detector **401** detects the absence of the easily detected signal (and the packet data) on the communication channel, and in response, enables a reduced processing mode of receiver circuit **400**. To enable the reduced processing mode of receiver circuit **400**, non-idle detector **401** disables resampler **302**, equalizer **303**, carrier recovery circuit **304**, symbol decision circuit **305**, channel decoder **306**, framer/idle detector **307**, echo canceler **309**, timing update circuit **310**, equalizer update circuit **311**, carrier update circuit **312** and packet queue **318** of receiver circuit **400**, thereby simplifying the modem function when there is no packet data being received (i.e., during the NO DATA state).

In a second scheme, non-idle detector **401** monitors the presence and absence of carrier energy within the communication channel to determine whether packet data is being received. Upon detecting carrier energy within the communication channel, non-idle detector **401** enables the full processing mode of receiver circuit **400**. When no carrier energy (or a minimum carrier energy) is detected within the communication channel, non-idle detector **401** enables the reduced processing mode of receiver circuit **400**.

In a third scheme, a sub-carrier signal is used to signal the presence and absence of packet data. In this embodiment, the sub-carrier signal is demodulated with much less computational requirements than the packet data. One example of a signalling protocol which uses a sub-carrier signal is multi-carrier modulation (MCM) signalling. One example of multi-carrier modulation signalling is Discrete Multi-Tone (DMT) signalling. Although the receiver circuit used in connection with an MCM signalling protocol (hereinafter an MCM receiver circuit) is different from receiver circuit **400**, such an MCM receiver circuit is well known in the art and can be adapted for use with a non-idle detector in the manner described below.

In MCM signalling, the received analog signal consists of multiple sub-channels in the frequency domain. In such a format, one of these sub-channels is used by the associated

transmitter circuit to signal the presence of the DATA state. A non-idle detector circuit is coupled to receive the selected sub-channel of the incoming MCM signal. Upon detecting the sub-channel signalling, the non-idle detector circuit causes the receiver circuit to enter into a full processing mode, in which the received analog signal is processed using the full processing capabilities of the receiver circuit. After the packet data has been transmitted, the sub-channel signal is de-asserted. Upon detecting the absence of the sub-channel signal, the non-idle detector enables a reduced processing mode within the receiver circuit.

In the foregoing schemes, receiver circuit **400** (or the MCM receiver circuit) operates with a reduced level of processing to monitor the communication channel to detect the presence of a DATA state. After a timeout period has expired, the communication channel can automatically be assigned to a call-inactive status, and the detection processing performed by non-idle detector **401** can be reduced. The associated transmitter circuit can then initiate a session by transmitting a non-idle state signal long enough to ensure that non-idle detector **401** detects the subsequent DATA state. Alternatively, receiver circuit **400** can periodically poll the other end of the communication channel (i.e., the associated transmitter circuit), and only enable non-idle detector **401** during a window following each poll.

Alternatively, receiver circuit **400** can periodically enable the non-idle detector **401** during predetermined time intervals which can be used by the remote transmitter circuit to signal the transmission of a packet. A periodic poll or some other timing signal would be used to maintain synchronization of these time intervals between receiver circuit **400** and the remote transmitter circuit. In the case of a multi-line access network access circuit (described in more detail below in connection with FIG. **5**), the time intervals can be staggered across the multiple lines such that idle detection can be shared across those lines. In this manner, the processing requirements of the receiver circuit **400** are further reduced.

In a particular embodiment, receiver circuit **400** is implemented in software in a subscriber's personal computer (PC). In this embodiment, the processing resources required to implement receiver circuit **400** are greatly reduced during the NO DATA state. For example, when receiver circuit **400** demodulating a standard V.34 signal is in the full processing mode (i.e., during a DATA state), approximately 40 percent of a 100 MHz Pentium™ PC's computing resources may be consumed by the implementation of receiver circuit **400**. However, during the reduced processing mode (i.e., during a NO DATA state), this percentage can be reduced by approximately one order of magnitude.

As previously described, when no packet data is being received, there is a statistically significant reduction in the amount of processing required within receiver circuit **400**. This reduction in processing can be used to reduce power consumption.

In accordance with another aspect of the invention, the quality of communication channel **321** can be determined in the manner previously described in connection with receiver circuit **300** (FIG. **3**). If the quality of communication channel **321** is determined to be relatively high, then the processing within receiver circuit **400** can be reduced in the manner previously described in connection with receiver circuit **300**.

In accordance with another aspect of the invention, when using the burst-mode protocol, the local transmitter circuit associated with receiver circuit **400** will not be continuously transmitting. During the periods when the local transmitter circuit is not transmitting local transmit data, there is no possibility of an echo signal on communication channel **321**. Accordingly, echo canceler **309** can be disabled when the local transmitter circuit is not transmitting packet information, thereby further reducing the processing requirements of receiver circuit **300**.

In another embodiment, receiver circuit **400** is used in a telephone company central office to implement a multi-line network access circuit (i.e., increase the number of lines that can be handled by a single DSP resource). FIG. **5** is a block diagram of a multi-line network access circuit **500** which can be located in a central office. In another embodiment, multi-line network access circuit **500** can be used by an internet service provider (ISP). Multi-line network access circuit **500** includes a first number N of incoming communication channels **401–405** (e.g., telephone lines), a corresponding number of A/D converters **411–415** and buffers **421–425**, a switch matrix **440**, a second number M of digital signal processing resources **431–433**, a non-idle detector circuit **450** and DSP allocation and scheduling circuit **451**. In the described embodiment, N is an integer greater than one, and M is an integer greater than or equal to one. In a particular example, N is equal to 100, while M is equal to 10. The ratio of N:M is referred to as the concentration ratio. The larger the concentration ratio, the fewer the number of DSP resources required to support a large number of incoming signal lines. In the described embodiment, the concentration ratio is greater than 1:1.

Each of the corresponding telephone lines **401–405** is coupled to a corresponding subscriber (rot shown). Each subscriber has one or more transmitter circuits which transmit non-idle state signalling and packet data on the corresponding line in accordance with the burst mode protocol previously described. Each of lines **401–405** is coupled to a dedicated A/D converter **411–415**. Each of A/D converters **411–415** is substantially equivalent to the previously described A/D converter **301** (FIGS. **3** and **4**). Typically, each of A/D converters **411–415** is located within a codec which also includes a corresponding D/A converter (not shown).

Each of the A/D converters **411–415** is coupled to a dedicated buffer circuit **421–425**. Each of buffer circuits **421–425** operates in a first in, first out manner, and stores a plurality of samples of the incoming signals. Buffer circuits **421–425** are coupled to switch matrix **440**. Switch matrix **440** is controlled to provide the output signals from each of buffers **421–425** to non-idle detector **450**. Non-idle detector **450**, which includes N non-idle detector circuits (one for each of lines **401–405**), monitors the signals provided by buffer circuits **421–425**. In response, non-idle detector **450** determines which of the lines **401–405** are in a DATA state and which of the lines **401–405** are in a NO DATA state. At any given time, it is probable that only a few (if any) of the lines **401–405** will be in the DATA state. As a result, it is possible to multiplex the packet data on the plurality of lines **401–405** into a single one of the DSP circuits **431–433**.

In the described embodiment, each of DSP circuits **431–433** includes the following elements which were previously described in connection with receiver circuits **300** and **400** (FIGS. **3** and **4**): resampler **302**, equalizer **303**, carrier recovery circuit **304**, symbol decision circuit **305**, channel decoder **306**, framer/idle detector **307**, sample buffer **308**, echo canceler **309**, timing update circuit **310**, equalizer update circuit **311**, carrier update circuit **312**, and summing node **319**.

Non-idle detector **450** generates a plurality of control signals which are provided to DSP allocation and scheduling circuit **451**. These control signals indicate which of the lines

401–405 are carrying packet data at any given time. In response to the control signals, DSP allocation and scheduling circuit 451 routes the received packet data from buffers 421–425 to DSP circuits 431–433. DSP circuits 431–433 operate in the manner previously described in connection with FIGS. 3 and 4 to provide demodulated bit streams. The demodulated bit streams provided by DSP resources 431–433 are routed over digital switching circuitry to an end destination, such as internet service provider (ISP).

The following example will further illustrate how DSP allocation and scheduling circuit 451 routes the received packet data. FIG. 6 is a schematic diagram of packet data received on lines 401–405. In this example, data packets 601, 602 and 603 are simultaneously transmitted on lines 401, 402 and 403, respectively. At this time, lines 404 and 405 are in a NO DATA state. Non-idle detector 450 detects the presence of data packets 601, 602 and 603 in accordance with one of the previously described non-idle signalling schemes. Non-idle detector 450 transmits control signals to DSP allocation and scheduling circuit 451 indicating the presence of packet data on lines 401, 402 and 403. In response, DSP allocation and scheduling circuit 451 controls switch matrix 440 to route the output signals from lines 401, 402 and 403 to different ones of DSP circuits 431–433. For example, the packet information on line 401 can be routed to DSP circuit 431, the packet information on line 402 can be routed to DSP circuit 432, and the packet information on line 403 can be routed to DSP circuit 433.

Subsequently, data packets 604, 605 and 606 are received on lines 402, 403 and 404, respectively. Again, non-idle detector 450 detects these data packets 604–606, and informs DSP allocation and scheduling circuit 451. In response, DSP allocation and scheduling circuit 451 controls switch matrix 440 to route the data packets 604, 605 and 606 to different DSP circuits 431–433. For example, data packet 604 on line 402 can be routed to DSP 432, data packet 605 on line 403 can be routed to DSP 433, and data packet 606 on line 404 can be routed to DSP 431. In this manner, DSP 431 is used to process packet data from both line 401 and line 404 (i.e., data packets 601 and 606).

Subsequently, data packets 607 and 608 are received on lines 401 and 404, respectively. Again, non-idle detector 450 detects these data packets 607–608, and informs DSP allocation and scheduling circuit 451. DSP allocation and scheduling circuit 451 controls switch matrix 440 to route data packets 607 and 608 to different DSP circuits 431–433. For example, data packet 607 on line 401 can be routed to DSP 431 and data packet 608 on line 404 can be routed to DSP 432. In this manner, DSP 432 is used to process packet data from both line 402 and line 404 (i.e., data packets 602, 604 and 608).

DSP allocation and scheduling circuit 451 establishes and removes the previously described routing connections by a scheduling algorithm that uses information about queue occupancy and link activity detection to identify those lines that have data to process.

In accordance with the foregoing description, each of DSP resources 431–433 is capable of processing packet information from a plurality of lines 401–405. To facilitate such processing, each of DSP resources 431–433 stores several sets of update coefficients. Each set of update coefficients corresponds with a particular communication channel established on one of line 401–405. For example, if DSP resource 431 is processing packet data received on lines 401 and 404, then DSP resource stores two sets of update coefficients. A first set of update coefficients is selected in view of the operating characteristics of the session established on line 401 and a second set of update coefficients is selected in view of the operating characteristics of the session established on line 404. The first set of update coefficients is enabled within DSP resource 431 when receiving packet data on line 401, and the second set of update coefficients is enabled within DSP resource 431 when receiving packet data on line 404. The various sets of update coefficients are enabled by DSP allocation and scheduling circuit 451. Each set of update coefficients include the update coefficients associated with timing update circuit 310, equalizer update circuit 311 and carrier recovery update circuit 312 within the DSP resource (FIGS. 3 and 4).

By storing the update coefficients associated with the various communication channels, DSP resources 431–433 can quickly become operational upon receiving packet information (because the update coefficients do not need to be re-established). This scheme works well because the same communication link, having relatively constant signal transmission characteristics, exists on lines 401–405 for the duration of each session.

One result of the previously described multi-line network access circuit 500 is a reduction in the real-time digital signal processing requirements. In conventional systems, sufficient DSP resources must be dedicated to each line to continuously perform the full modem function. However, within multi-line network access circuit 500, most of the DSP resources 431–433 are freed up for most of the time, and can be applied to other lines that have active packet traffic.

Given a system designed with a certain concentration ratio, such as 10:1, there is some probability that more than 10 percent of the lines 401–405 may be receiving packet information at the same time. By design, this probability is minimized to an acceptable level, by controlling the concentration ratio based on observed or predicted traffic intensities.

In existing systems with session-based concentration mechanisms (such as call-connection used in voice and ISDN networks), when the offered traffic load instantaneously exceeds the available resources, communication is blocked. However, in accordance with the present invention, buffers 421–425 store input samples for subsequent full precision processing. Such buffering allows communication to proceed during periods of instantaneous oversubscription with the introduction of some additional latency. As long as DSP resources 431–433 have sufficient capacity over the buffer time period to process all of the received packet information, no packet information will be blocked.

In the described embodiment, input samples for each of lines 401–405 are stored in corresponding buffer circuits 421–425. DSP allocation and scheduling circuit 451 implements a service queue model to schedule the processing of the input samples within DSP resources 431–433. Buffer circuits 421–425 enable the smoothing of instantaneous packet traffic peaks, where packets arrive on many of the lines 401–405 coincidentally. The scheduling capability can be used with a Quality of Service policy mechanism to allocate DSP resources 431–433 to those lines 401–405 that require lower latency and/or lower retransmission rate.

Additionally, this invention includes a signalling method from the system of DSP resources 431–433 back to each of the modems coupled to communication channels 401–405. This signalling method is used to indicate the buffer fill level and can be used by the remote modems to temporarily reduce the packet transmission rates, thereby controlling the oversubscription of the system.

In accordance with another embodiment of the invention, the burst-mode protocol effectively enables multi-drop

operation. In multi-drop operation, multiple modems connected are connected to the same communication channel using time-division multiplexing. For example, in accordance with multi-drop operation, a subscriber can operably couple more than one modem to a single telephone line. FIG. **7** is a schematic diagram of a multi-drop configuration which includes modems **1001–1003** in the subscriber's residence **1010**, and modem **1004** in the telephone company central office **1011**. Modems **1001–1004** are coupled by a twisted pair telephone line **1012**. Each of modems **1001–1004** include a transmitter circuit and a receiver circuit which operate in accordance with the previously described burst-mode protocol. Because the transmitter circuits in modems **1001–1004** do not generate IDLE symbols in accordance with the burst-mode protocol, these transmitter circuits do not introduce any traffic onto telephone line **1012** during the time that the transmitter circuits of modems **1001–1004** are not transmitting packets. As a result, any of the transmitter circuits of modems **1001–1004** can establish a session on telephone line **1012** as follows.

First, the transmitter circuits coupled to the common line **1012** can transmit packets whenever necessary. However, this may introduce collisions between packet information sent by the transmitter circuits. A better solution is to use a carrier sense multiple access (CSMA) scheme, where each transmitter circuit listens to the communication channel prior to sending packet information. A common extension to CSMA is CSMA/CD in which transmissions are immediately terminated if collisions are detected. Such CSMA schemes are commonly used in the ethernet field. These CSMA schemes enable effective communication between all modems connected to a single telephone twisted pair wire (e.g., line **401**), including a plurality of modems in the subscriber's home (or business) and a modem in the telephone company central office (e.g., the modem which includes DSP resource **431**).

An alternative to the contention based protocols described above are a class of schemes commonly referred to as reservation based protocols. Applying these well known techniques, multiple modems would use a separate arbitration channel to decide which modem gains access to the channel.

In an alternative embodiment, multi-drop access is provided by implementing well known time division multiple access (TDMA) techniques in which every transmitter circuit is assigned a fixed time slot during which to transmit packet information. The advantage of this scheme is ease of implementation.

In yet other embodiments, multi-drop access is provided by implementing conventional frequency division multiple access (FDMA) schemes, code division multiple access (CDMA) arbitration schemes, or data sense multiple access (DSMA) schemes.

In accordance with another aspect of the present invention, the burst-mode protocol enables multiple transmitter circuits to transfer data at different rates in a rate adaptive manner. FIG. **8** is a schematic representation of packet information which is transmitted by transmitter circuits in accordance with the burst-mode protocol of the present embodiment. In the described example, it is assumed that packet **700** is transmitted by the transmitter circuit of modem **1001**. This packet **700** can be transmitted to any one or more of the other modems **1002–1004**. Packet **700** includes a preamble **701** and a main body **702**. Packet **700** is transmitted using a gated modulation or gated carrier signal. Preamble **701**, which is approximately 20 to 100 symbols in length, includes information identifying the nature of the packet **700**. For example, preamble **701** can include information which identifies: (1) a version or type field for the preamble, (2) packet source and destination addresses, (3) the line code (i.e., the modem protocol being used), (4) the data rate, (5) error control parameters, (6) packet length and (7) a timing value for the expected reception slot of a subsequent packet.

The receiver circuits of the modems **1002–1004** coupled to the telephone line **1012** detect the information present in the preamble **701** and establish synchronization at the beginning of the packet **700**. In the described embodiment, all preambles are transmitted at a relatively low, common transmission rate. The preamble **701** contains information which identifies the data rate of the main body **702** of the packet. For example, the preamble **701** may indicate that the main body **702** of the packet **700** includes data which is being transmitted at a higher data rate. The transmitter circuit of modem **1001** then transmits the main body **702** of the packet **700** at this higher rate. The receiver circuit identified by the destination address of preamble **701** receives the main body **702** of the packet **700** at the rate identified in the preamble **701**.

Returning to FIG. **8**, packet **710** is representative of a packet sent by a second transmitter circuit. In the described example, packet **710** is transmitted by modem **1004** in the central office **1011** to one or more of the modems **1001–1003** in the subscriber's residence **1010**. Packet **710** includes preamble **711** and main body **712**. Preamble **711** includes information which is transmitted at the same rate as the information of preamble **701**. However, preamble **711** indicates that the main body **712** is transmitted at a second data rate, which is different from the data rate of the main body **702** of packet **700**.

Because the receiver circuits are informed of these different data rates prior to receiving main body **702** and main body **712**, the receiver circuits are able to adjust for these different data rates. More specifically, preamble **711** can be used to select a different set of update coefficients for use within the receiver circuit to process main body **712**.

The previously described rate adaptive protocol allows both simple devices (which communicate at a relatively low speed) and complex devices (which communicate at a relatively high speed) to be operably coupled to a single telephone line at the same time. For example, modem **1001** can be located in a personal computer, while modem **1002** can be located in a "smart toaster" or similar appliance.

The previously described rate adaptive protocol allows a multi-line network access circuit to take advantage of reduced processing required for receiving packets that have a lower data rate in their main body. For example, an operator may offer subscribers lower rates in exchange for limiting packet traffic to lower data rates during certain times or under certain classes of service.

When the preamble in a burst-mode packet includes the destination address of the packet, the receiver circuits can monitor the destination address of the packet, and in response, filter packets which do not need to be demodulated, thereby reducing the processing requirements of the receiver circuits. In addition, when the preamble in a burst-mode packet includes a source address of the packet, the receiver circuit can recall appropriate stored configuration parameters to speed the acquisition/demodulation of the packet.

As previously described, the preamble can also contain error control information that will be used by the main body of the packet. Using this scheme, the same modem can accommodate both "expensive" error control schemes such

as might be required for video applications, as well as "inexpensive" error control schemes which might be used for traditional packet traffic. Another portion of the error control information can be used to "request an acknowledgement" from the receiver circuit. If the received packet is acceptable, then the receiver circuit will cause an acknowledge (ack) signal to be transmitted to the modem residing at the source address. If the received packet is not acceptable, then the receiver circuit will cause a no acknowledge (nack) signal to be transmitted to the modem residing at the source address.

FIG. **9** is a block diagram of a multi-line network access circuit **800** in accordance with another embodiment of the present invention. In general, multi-line network access circuit **800** facilitates the transmission of packet information from a source which generates digital packet information (e.g., an internet service provider) to a subscriber's modem which operates in response to a conventional modem protocol (i.e., packet data interleaved with idle information). Multi-line network access circuit **800** includes D/A converters **511–515**, switch matrix **530**, DSP resources **531–533**, common idle generator **535**, input packet processor **540**, DSP allocation and scheduling circuit **541**, multiplexer **550** and buffer circuits **561–563**.

Multiplexer **550** is coupled to a plurality of internet service providers (ISPs) **551–553** through buffer circuits **561–563**. The present invention is not limited to ISPs, but can be extended to any source which transmits digital packet data. Moreover, although three ISPs **551–553** are illustrated, it is understood that many other sources can be coupled to multiplexer **550**.

Packets arriving from ISPs **551–553** are stored in the corresponding input buffers **561–563**. The input packet processor **540** examines the destination addresses associated with the incoming packets stored in buffers **561–563**. In response to these destination addresses, input packet processor **540** determines which subscriber telephone line **501–505** is to receive the packet. This information is transmitted to DSP allocation and scheduling circuit **541**. In response, DSP allocation and scheduling circuit **541** selects one of the DSP resources **531–533** to modulate the packet data, and sends control signals to multiplexer **550**, thereby routing the packets from the input buffers **561–563** to the selected DSP resources **531–533**. DSP allocation and scheduling circuit **541** also controls switch matrix **530** to couple DSP resources **531–533** and common idle generator **535** to D/A converters **511–515**. Each of the D/A converters **511–515** is coupled to a corresponding telephone line **501–505**. Each of telephone lines **501–505** is connected to a subscriber who has a receiver circuit that is capable of receiving packet data and idle information. The following example will clarify the operation of multiplexer **550** and switch matrix **530**.

FIG. **10** is a schematic diagram of packet data received from ISPs **551–553**. In this example, ISPs **551** and **552** simultaneously transmit data packets **901** and **902**, respectively. At this time, ISP **553** is not transmitting a data packet. Packets **901** and **902** are received in input buffers **561** and **562**, respectively. Input packet processor **540** detects the arrival of data packets **901** and **902**, notifies DSP allocation and scheduling circuit **541**. In response, DSP allocation and scheduling circuit **541** selects which DSP resource will process each packet. In the present example, packet **901** is routed to DSP resource **531** and data packet **902** is routed to DSP resource **532**, although any other combination of resource assignment is possible, including the allocation of multiple packets to a single DSP resource.

In addition, DSP allocation and scheduling circuit **541** controls switch matrix **530** as follows. Assume that the data packet **901** transmitted by ISP **551** is intended for a subscriber connected to telephone line **504** and that data packet **902** is intended for a subscriber connected to telephone line **501**. In this case, switch matrix **530** is controlled to couple DSP resource **531** to D/A converter **514**. In addition, switch matrix **530** is controlled to couple DSP resource **532** to D/A converter **511**. At the same time, switch matrix **530** is controlled to couple the remaining active D/A converters **512**, **513** and **515** to common idle generator **535**. Common idle generator **535** generates a stream of idle information in accordance with a conventional modem protocol. In one embodiment, common idle generator **535** generates the stream of idle information in the manner previously described in connection with idle generator **314** and idle symbol predictor **316** (FIG. **4**). In another embodiment, where the stream of expected idle information repeats with a reasonable period, the stream of expected idle information can be pre-computed and stored in a buffer memory within common idle generator **535**. This buffer memory is then accessed when common idle generator **535** is to generate the common idle signal.

As a result, data packet **902** is transmitted on telephone line **501**, data packet **901** is transmitted on telephone line **504**, and idle information is transmitted on telephone lines **502**, **503** and **505**. After the transmission of data packets **901** and **902** is complete, DSP allocation and scheduling circuit **541** causes switch matrix **530** to couple D/A converters **511** and **514** to common idle generator **535**, thereby transmitting idle information on lines **501** and **504**.

In the foregoing manner, only one DSP resource (i.e., common idle generator **535**) is required to generate idle information for a relatively large number of telephone lines. This advantageously results in a reduced amount of processing within multi-line network access circuit **800**, when compared with prior art systems which require a dedicated idle generator for each of telephone lines **501–505**.

Multi-line network access circuit **800** also facilitates an efficient multi-cast transmission scheme. Assume that ISP **553** is to transmit the same data packet **903** (FIG. **10**) to each of telephone lines **501–505**. To accomplish this, multiplexer **550** is controlled to route the data packet to one of DSP resources **531–533** (e.g., DSP resource **531**). DSP allocation and scheduling circuit **541** causes switch matrix **530** to route the output signal provided by DSP **531** to each of D/A converters **511–515**. As a result, the data packet is simultaneously multi-cast on telephone lines **501–505** using a single one of DSP resources **531–533** (See, FIG. **10**).

Multi-cast data packets can be interleaved with uni-cast data packets (i.e., data packets which are transmitted to a single subscriber) using synchronous or asynchronous methods. In a synchronous method, the multi-cast data packets are transmitted from a common buffer in a time aligned manner on all of the lines **501–505**. In this method, the common buffer is continuously loaded by the selected DSP resource. This requires that time slots be reserved across the set of channels for multi-cast data, and that DSP allocation and scheduling circuit **541** control the uni-cast data transmissions to not overlap with the time slots reserved for multi-cast data transmission.

In an asynchronous method, the multi-cast and uni-cast data samples for each channel are stored in a buffer associated with the channel. Each of lines **501–505** is driven by data stored in a corresponding buffer. This enables the multi-cast data to be sent at different times on each individual line, removing the time slot reservation restriction of the previously described synchronous method.

Rembrandt Wireless
Ex. 2012
Apple Inc. v. Rembrandt Wireless Technologies, LP, IPR2020-00033
Page 616

In one variation, common idle generator **541** is eliminated from multi-line network access circuit **800**, such that idle information is not inserted between the packet data. In this variation, the receiver circuits coupled to lines **501–505** are replaced with receiver circuits which operate in response to the previously described burst-mode protocol. The non-idle signalling required to indicate the presence of a DATA state in accordance with the burst-mode protocol is performed within multi-line network access circuit **800**. For example, this signalling can be implemented by the individual DSP resources **531–533** or by a common signalling circuit (not shown) which is controlled by DSP allocation and scheduling circuit **541**.

An alternative configuration of multi-line access circuit **800** includes multiple modems that do not include D/A converters **511–515**, but instead provide aggregated digital signals directly to a digital trunk line of the telephone network. The previously described techniques apply to this configuration as well. Similarly, A/D converters **411–415** can be eliminated from multi-line network access circuit **500** (FIG. **5**). In such an embodiment, multi-line network access circuit **500** receives aggregated digital signals directly from a digital trunk line of the telephone network.

Although the invention has been described in connection with several embodiments, it is understood that this invention is not limited to the embodiments disclosed, but is capable of various modifications which would be apparent to one of ordinary skill in the art. For example, although the present modems have been described in terms of codecs and DSP chips, it is understood that the modems in accordance with the present invention can be implemented entirely by software within a conventional X86 or X86 with MMX processor. Moreover, although the present invention has been described in connection with communication channels which are telephone lines, it is understood that other types of communication channels can be used to implement the present invention. In addition, although the present invention has been described in connection with selected modulation techniques (i.e., QAM and MCM) it is understood that other modulation techniques, such as carrier-less amplitude and phase (CAP) modulation, can be used. Moreover, although the receiver circuits **300** and **400** (FIGS. **3** and **4**) have been described as having a resampler **302**, it is understood that in embodiments which process baud synchronous samples, the resampler **302** can be eliminated from these receiver circuits. Thus, the invention is limited only by the following claims.

What is claimed is:

1. A method for operating a modem on a communication channel the method comprising the steps of:

receiving a continuous analog signal transmitted on the communication channel with a receiver circuit of the modem, the analog signal comprising packet information and idle information;

detecting the presence of the idle information with the receiver circuit;

entering a standby mode within the receiver circuit upon detecting the presence of the idle information, wherein an amount of processing performed by the receiver circuit is reduced during the standby mode;

reducing the amount of processing performed by selected circuitry within the receiver circuit when the receiver circuit is in the standby mode;

wherein the receiver circuit comprises an echo canceler, the method further comprising the step of reducing a length of the echo canceler when the receiver circuit is in the standby mode.

2. The method of claim **1**, wherein the receiver circuit comprises an equalizer, the method further comprising the step of reducing the processing requirements of the equalizer when the receiver circuit is in the standby mode.

3. A method for operating a modem on a communication channel, the method comprising the steps of:

receiving a continuous analog signal transmitted on the communication channel with a receiver circuit of the modem, the analog signal comprising packet information and idle information;

detecting the presence of the idle information with the receiver circuit; and

entering a standby mode within the receiver circuit upon detecting the presence of the idle information, wherein an amount of processing performed by the receiver circuit is reduced during the standby mode;

wherein the step of detecting further comprises the steps of:

fully demodulating the analog signal with the receiver circuit to provide a digital bit stream;

determining whether the digital bit stream corresponds with a predetermined idle bit stream;

wherein the step of entering the standby mode further comprises the step of entering the standby mode if the digital bit stream corresponds with the predetermined idle bit stream; and

generating an idle bit pattern if the digital bit stream corresponds with the predetermined idle bit stream;

converting the idle bit pattern to a plurality of expected idle symbols;

comparing the expected idle symbols with a plurality of soft symbols which are generated by the receiver circuit at a reduced processing power in response to the analog signal; and

remaining in the standby mode as long as the expected idle symbols match the soft symbols.

4. The method of claim **3**, further comprising the step of exiting the standby mode when an expected idle symbol does not match a corresponding soft symbol.

5. The method of claim **4**, further comprising the steps of:

storing a most recent history of the analog signal in a buffer; and

accessing the buffer after the step of exiting the standby mode, thereby enabling the receiver circuit to process the most recent history of the analog signal.

6. A method for operating a modem on a communication channel, the method comprising the steps of:

receiving a continuous analog signal transmitted on the communication channel with a receiver circuit of the modem, the analog signal comprising packet information and idle information;

detecting the presence of the idle information with the receiver circuit; and

entering a standby mode within the receiver circuit upon detecting the presence of the idle information, wherein an amount of processing performed by the receiver circuit is reduced during the standby mode;

wherein the step of detecting further comprises the steps of:

fully demodulating the analog signal with the receiver circuit to provide a digital bit stream; and

determining whether the digital bit stream corresponds with a predetermined idle bit stream;

wherein the step of entering the standby mode further comprises the step of entering the standby mode if

the digital bit stream corresponds with the predetermined idle bit stream; and

generating an idle bit pattern if the digital bit stream corresponds with the predetermined idle bit stream;

converting the idle bit pattern to a plurality of expected differences between successive idle symbols;

comparing the expected differences with a plurality of actual differences between successive idle symbols which are generated by the receiver circuit at a reduced processing power in response to the analog signal; and

remaining in the standby mode as long as the expected differences correspond with the actual differences.

7. A method for operating a modem on a communication channel, the method comprising the steps of:

receiving a continuous analog signal transmitted on the communication channel with a receiver circuit of the modem, the analog signal comprising packet information and idle information;

detecting the presence of the idle information with the receiver circuit; and

entering a standby mode within the receiver circuit upon detecting the presence of the idle information, wherein an amount of processing performed by the receiver circuit is reduced during the standby mode;

wherein the step of detecting further comprises the steps of:

fully demodulating the analog signal with the receiver circuit to provide a digital bit stream;

determining whether the digital bit stream corresponds with a predetermined idle bit stream;

wherein the step of entering the standby mode further comprises the step of entering the standby mode if the digital bit stream corresponds with the predetermined idle bit stream; and

accessing a memory which stores a repetitive pattern of expected idle symbols if the digital bit stream corresponds with the predetermined idle bit stream;

comparing the expected idle symbols with a plurality of soft symbols which are generated by the receiver circuit at a reduced processing power in response to the analog signal; and

remaining in the standby mode as long as the expected idle symbols match the soft symbols.

8. A receiver circuit for use in a modem, the receiver circuit comprising:

an analog to digital (A/D) converter for receiving an analog signal which comprises packet information and idle information;

a carrier recovery circuit coupled to the A/D converter, wherein the carrier recovery circuit provides soft symbol decisions regarding the identity of the packet information and idle information;

a symbol decision circuit coupled to the carrier recovery circuit, wherein the symbol decision circuit provides hard symbol decisions regarding the identity of the packet information and idle information;

an idle detector circuit coupled to the symbol decision circuit, wherein the idle detector circuit detects the presence of idle information in response to the hard symbol decisions provided by the symbol decision circuit, and wherein the idle detector circuit instructs the receiver circuit to enter a reduced processing mode upon detecting the presence of idle information;

an idle generator circuit coupled to the idle detector circuit, wherein the idle generator circuit generates an idle bit pattern when the idle detector detects the presence of the idle information;

an idle symbol predictor coupled to the idle generator circuit, wherein the idle symbol predictor provides a plurality of expected idle symbols in response to the idle bit pattern; and

a comparator coupled to the idle symbol predictor and the carrier recovery circuit, wherein the comparator compares the expected idle symbols with the soft symbol decisions, wherein the comparator causes the receiver circuit to remain in the standby mode as long as the expected idle symbols match the soft symbol decisions and wherein the comparator causes the receiver circuit to exit the standby mode when an expected idle symbol does not match the soft symbol decision.

9. A receiver circuit for use in a modem, the receiver circuit comprising:

an analog to digital (A/D) converter for receiving an analog signal which comprises packet information and idle information;

an equalizer circuit coupled to the A/D converter, wherein the equalizer circuit provides actual equalized digital samples which correspond to the identity of the packet information and idle information;

a symbol decision circuit coupled to the equalizer circuit, wherein the symbol decision circuit provides hard symbol decisions regarding the identity of the packet information and idle information;

an idle detector circuit coupled to the symbol decision circuit, wherein the idle detector circuit detects the presence of the idle information in response to the hard symbol decisions provided by the symbol decision circuit, and wherein the idle detector circuit instructs the receiver circuit to enter a reduced processing mode upon detecting the presence of idle information;

an idle generator circuit coupled to the idle detector circuit, wherein the idle generator circuit generates an idle bit pattern when the idle detector detects the presence of idle information;

an idle symbol predictor coupled to the idle generator circuit, wherein the idle symbol predictor provides a plurality of expected equalized digital samples associated with expected idle symbols in response to the idle bit pattern; and

a comparator coupled to the idle symbol predictor and the equalizer circuit, wherein the comparator compares the expected equalized digital samples with the actual equalized digital samples, wherein the comparator causes the receiver circuit to remain in the standby mode as long as the expected equalized digital samples match the actual equalized digital samples, and wherein the comparator causes the receiver circuit to exit the standby mode when an expected equalized digital sample does not match an actual equalized digital sample.

10. A method for transferring information on a telephone line, the method comprising the steps of:

modulating packets of digital information by a first transmitter circuit, wherein the packets of digital information are converted into first analog signal bursts of discrete duration, and wherein the first transmitter circuit is coupled to a first telephone line;

providing no signal from the first transmitter circuit to the first telephone line between the first analog signal bursts;

modulating packets of digital information by a second transmitter circuit, wherein the packets of digital information are converted into second analog signal bursts of discrete duration, and wherein the second transmitter circuit is coupled to a second telephone line;

providing no signal from the second transmitter circuit to the second telephone line between the second analog signal bursts;

monitoring the first and second telephone lines with a multi-line network access circuit;

detecting the presence and absence of the first and second analog signal bursts on the telephone line by a non-idle detector of multi-line network access circuit;

demodulating the first and second analog signal bursts with a single receiver circuit of the multi-line network access circuit when the non-idle detector detects the presence of the first and second analog signal bursts on the telephone line; and

disabling the demodulating within the receiver circuit when the non-idle detector detects the absence of the first and second analog signal bursts on the telephone line.

11. The method of claim **10**, further comprising the step of buffering the first and second analog signal bursts within the multi-line network access circuit.

12. The method of claim **10**, further comprising the steps of:

selecting a first set of operating coefficients within the receiver circuit to process the first set of analog signal bursts; and

selecting a second set of operating coefficients within the receiver circuit to process the second set of analog signal bursts.

* * * * *

Exhibit J

UNITED STATES DEPARTMENT OF COMMERCE
United States Patent and Trademark Office
Address: COMMISSIONER OF PATENTS AND TRADEMARKS
Washington, D.C. 20231

APPLICATION NO.	FILING DATE	FIRST NAMED INVENTOR	ATTORNEY DOCKET NO.
09/205,205	12/04/98	BREMER B	061606-1770

TM02/0628

SCOTT A HORSTEMEYER
THOMAS KAYDEN HORSTEMEYER & RISLEY
100 GALLERIA PARKWAY NW
SUITE 1500
ATLANTA GA 30339-5948

EXAMINER
PHU P

ART UNIT	PAPER NUMBER
2631	4

DATE MAILED: 06/28/01

Please find below and/or attached an Office communication concerning this application or proceeding.

Commissioner of Patents and Trademarks

PTO-90C (Rev. 10/95)

1- File Copy

Office Action Summary	Application No.	Applicant(s)
	09/205,206	BREMER, GORDON
	Examiner	Art Unit
	Phuong Phu	2631

-- The MAILING DATE of this communication appears on the cover sheet with the correspondence address --

Period for Reply

A SHORTENED STATUTORY PERIOD FOR REPLY IS SET TO EXPIRE 3 MONTH(S) FROM THE MAILING DATE OF THIS COMMUNICATION.

- Extensions of time may be available under the provisions of 37 CFR 1.136 (a). In no event, however, may a reply be timely filed after SIX (6) MONTHS from the mailing date of this communication.
- If the period for reply specified above is less than thirty (30) days, a reply within the statutory minimum of thirty (30) days will be considered timely.
- If NO period for reply is specified above, the maximum statutory period will apply and will expire SIX (6) MONTHS from the mailing date of this communication.
- Failure to reply within the set or extended period for reply will, by statute, cause the application to become ABANDONED (35 U.S.C. § 133).
- Any reply received by the Office later than three months after the mailing date of this communication, even if timely filed, may reduce any earned patent term adjustment. See 37 CFR 1.704(b).

Status

1)☒ Responsive to communication(s) filed on *15 March 1999*.

2a)☐ This action is **FINAL**. 2b)☒ This action is non-final.

3)☐ Since this application is in condition for allowance except for formal matters, prosecution as to the merits is closed in accordance with the practice under *Ex parte Quayle*, 1935 C.D. 11, 453 O.G. 213.

Disposition of Claims

4)☒ Claim(s) *1-26* is/are pending in the application.

4a) Of the above claim(s) _____ is/are withdrawn from consideration.

5)☒ Claim(s) *1-21* is/are allowed.

6)☒ Claim(s) *23-26* is/are rejected.

7)☒ Claim(s) *22* is/are objected to.

8)☐ Claims _____ are subject to restriction and/or election requirement.

Application Papers

9)☐ The specification is objected to by the Examiner.

10)☒ The drawing(s) filed on *04 December 1998* is/are objected to by the Examiner.

11)☐ The proposed drawing correction filed on _____ is: a)☐ approved b)☐ disapproved.

12)☐ The oath or declaration is objected to by the Examiner.

Priority under 35 U.S.C. § 119

13)☐ Acknowledgment is made of a claim for foreign priority under 35 U.S.C. § 119(a)-(d) or (f).

a)☐ All b)☐ Some * c)☐ None of:

1.☐ Certified copies of the priority documents have been received.

2.☐ Certified copies of the priority documents have been received in Application No. _____.

3.☐ Copies of the certified copies of the priority documents have been received in this National Stage application from the International Bureau (PCT Rule 17.2(a)).

* See the attached detailed Office action for a list of the certified copies not received.

14)☒ Acknowledgement is made of a claim for domestic priority under 35 U.S.C. § 119(e).

Attachment(s)

15) ☒ Notice of References Cited (PTO-892)

16) ☒ Notice of Draftsperson's Patent Drawing Review (PTO-948)

17) ☐ Information Disclosure Statement(s) (PTO-1449) Paper No(s) _____.

18) ☐ Interview Summary (PTO-413) Paper No(s). _____.

19) ☐ Notice of Informal Patent Application (PTO-152)

20) ☐ Other:

U.S. Patent and Trademark Office
PTO-326 (Rev. 01-01) Office Action Summary Part of Paper No. 4

DETAILED ACTION

Drawings

1. Figure 2 should be designated by a legend such as --Prior Art-- because only that which is old is illustrated. See MPEP § 608.02(g).

Claim Objections

2. Claim 22 is objected to because of the following informalities: "a second tributary transceivers" on line 3 should be changed to another name, for a suggestion, "a first tributary transceiver", in order to be distinguishable from "a second tributary transceiver" on lines 1 and 2. Appropriate correction is required.

Claim Rejections - 35 USC § 102

3. The following is a quotation of the appropriate paragraphs of 35 U.S.C. 102 that form the basis for the rejections under this section made in this Office action:

> A person shall be entitled to a patent unless --
>
> (e) the invention was described in a patent granted on an application for patent by another filed in the United States before the invention thereof by the applicant for patent, or on an international application by another who has fulfilled the requirements of paragraphs (1), (2), and (4) of section 371(c) of this title before the invention thereof by the applicant for patent.

4. Claims 23-28 are rejected under 35 U.S.C. 102(e) as being anticipated by Polley et al (5,999,563).

As per claim 23, see figures 2a and 5a, and col. 9, line 16 to col. 10, line 52. Polley et al discloses a system as claimed wherein the system comprises: a first transceiver (210) (see figure 2a) capable of transmitting and receiving a plurality of modulation methods (see col. 10, lines 40-51); and a second transceiver (220) (see figure 2a) capable of transmitting and receiving said plurality of modulation methods.

As per claim 24, Polley et al further discloses that said plurality of modulation methods is selected from a group consisting (QAM, CAP, DMT, FSK and PAM) (see col. 10, lines 40-51).

As per claim 25, see figures 2a and 5a, and col. 9, line 16 to col. 10, line 52. Polley et al discloses a master system (220) (see figure 2a), as claimed, wherein the system comprises a logic (530, 150) (see figure 5a) configured to enable the system to communicate over the multi-point communication system using a plurality of modulation methods (see col. 10, lines 40-51).

As per claim 27, see figures 2a and 5a, and col. 9, line 16 to col. 10, line 52. Polley et al discloses a remote system (210) (see figure 2a), as claimed, wherein the system comprises a logic (530, 150) (see figure 5a) configured to enable the system to communicate over the multi-point communication system using a plurality of modulation methods (see col. 10, lines 40-51).

Claims 26 and 28 are rejected with the same reason set forth for claim 24.

Allowable Subject Matter

5. Claims 1-21 are allowed over prior art of record.

6. Claim 22 would be allowable if rewritten to overcome the objection, set forth in this Office action.

Conclusion

7. The prior art made of record and not relied upon is considered pertinent to applicant's disclosure. References Polley et al (5,999,563), Pasternak et al (5,936,949), Beach (6,067,297) and Cheng (5,563,883) are cited because they are pertinent to transceivers for use in a multipoint communication system. However, none of prior art of record teaches or suggests a method or a system with limitations as recited in independent claims 1, 8, 11, 14, 17, 20 and 21.

8. Any inquiry concerning this communication or earlier communications from the examiner should be directed to Phuong Phu whose telephone number is 703-308-0158. The examiner can normally be reached on M-F (8:30-6:00) First Monday Off.

If attempts to reach the examiner by telephone are unsuccessful, the examiner's supervisor, Chi Pham can be reached on 703-305-4378. The fax phone numbers for the organization where this application or proceeding is assigned are 703-872-9314 for regular communications and 703-872-9314 for After Final communications.

Any inquiry of a general nature or relating to the status of this application or proceeding should be directed to the receptionist whose telephone number is 703-305-4700.

Phuong Phu
Examiner
Art Unit 2631

Phuong Phu
June 27, 2001

FORM PTO-892	U.S. DEPARTMENT OF COMMERCE PATENT AND TRADEMARK OFFICE	SERIAL NO. 09/205,205	GROUP ART UNIT 2631	ATTACHMENT TO PAPER NO.	4
NOTICE OF REFERENCES CITED		APPLICANT(S) BREMER, GORDON			

U.S. PATENT DOCUMENTS

*		DOCUMENT NO.	DATE	NAME	CLASS	SUB-CLASS	FILING DATE
	A	5,999,563	12/1999	Poliey et al			
	B	5,936,949	08/1999	Pasternak et al			
	C	6,067,297	05/2000	Beach			
	D	5,563,883	10/1996	Cheng			
	E						
	F						
	G						
	H						
	I						
	J						
	K						

FOREIGN PATENT DOCUMENTS

*		DOCUMENT NO.	DATE	COUNTRY	NAME	CLASS	SUB-CLASS
	L						
	M						
	N						
	O						
	P						
	Q						

OTHER REFERENCES (Including Author, Title, Date, Pertinent Pages, Etc.)

R	
S	
T	
U	

EXAMINER	DATE	
Phuong Phu	June 19, 2001	Form892ccs2105b

* A copy of this reference is not being furnished with this office action.
(See Manual of Patent Examining Procedure, section 707.05(a).)

Exhibit K

OIPE
OCT 0 1 2001
PATENT & TRADEMARK OFFICE

#5
10/11
Amdt/A

PATENT

IN THE UNITED STATES PATENT AND TRADEMARK OFFICE

In Re Application of:

Bremer

Serial No.: 09/205,205

Filed: 12/04/98

For: **System And Method Of Communication Via Embedded Modulation**

Group Art Unit: 2631

Examiner: P. Phu

Docket No. 61606-1770

RECEIVED
OCT 0 5 2001
Technology Center 2600

I hereby certify that this correspondence is being deposited with the United States Postal Service as first class mail, postage prepaid, in an envelope addressed to: Assistant Commissioner for Patents, Washington D.C. 20231, on

_____

_____
Signature

FIRST AMENDMENT AND RESPONSE

Assistant Commissioner for Patents
Washington, D.C. 20231

Sir:

The Office Action mailed June 28, 2001 (Paper No. 4) has been carefully considered. In response thereto, please enter the following amendments and consider the following remarks.

AUTHORIZATION TO DEBIT ACCOUNT

It is not believed that extensions of time or fees for net addition of claims are required, beyond those which may otherwise be provided for in documents accompanying this paper. However, in the event that additional extensions of time are necessary to allow consideration of this paper, such extensions are hereby petitioned under 37 C.F.R. §

1.136(a), and any fees required therefor (including fees for net addition of claims) are hereby authorized to be charged to Paradyne Corporation's Deposit Account No. 16-0255.

AMENDMENTS

Please amend the application as indicated hereafter.

In the Claims

Please cancel claims 27 and 28 without prejudice.

Please substitute the following clean copy text for the pending claims of the same number.

A1

22. (Once Amended) A computer readable medium having a program for controlling a second tributary transceiver using a secondary modulation method in a multipoint communication system, said communication system including a first tributary transceiver using a primary modulation method for communication and a master transceiver, said program comprising:

first logic configured to receive information transmitted using said secondary modulation method; and

second logic configured to ignore transmissions on said communication medium using said primary modulation method.

Rembrandt Wireless
Ex. 2012
Apple Inc. v. Rembrandt Wireless Technologies, LP, IPR2020-00033
Page 627

DEF0007506
IPR2020-00036 Page 00627
002

A2

23. (Once Amended) A multi-point communication system, comprising:

a first transceiver capable of transmitting and receiving a plurality of modulation methods; and

at least two additional transceivers, each being capable of transmitting and receiving at least one of said plurality of modulation methods to the exclusion of at least one of the modulation methods transmitted and received by the other one of said two transceivers.

A3

25. (Once Amended) A master transceiver for use in a multi-point communication system, comprising:

logic configured to enable the master transceiver to communicate over the multi-point communication system using a plurality of modulation methods; and

a remote transceiver comprising:

a logic configured to enable the remote transceiver to communicate over the multi-point communication system using at least one of the modulation methods to the exclusion of others of said modulation methods.

Rembrandt Wireless
Ex. 2012
Apple Inc. v. Rembrandt Wireless Technologies, LP, IPR2020-00033
Page 628

DEF0007507
IPR2020-00036 Page 00628
003

REMARKS

The allowability of claims 1 through 21 is noted with appreciation. In addition, claim 22 has been indicated as being allowable if amended to correct on apparent error therein. Accordingly, claim 22 has been amended as suggested by the Examiner and it, too, is now allowable.

Claims 23 through 28 were rejected under 35 U.S.C. §102(e) as being anticipated by U.S. patent 5,999,563 to Polley *et al.*, with particular reference to Figs. 2a and 5a of the patent as well as column 9, line 16 through column 10, line 52, thereof. In view of the rejection, claims 23, 24, 25, and 26 have been thus indirectly amended and claims 27 and 28 have been canceled. It is believed that claims 23 through 26 are now allowable over the reference for the following reasons.

Polley *et al.* shows a system wherein a multi-mode transceiver connects to a second transceiver capable of receiving and transmitting the plurality of modulation methods transmitted and received by the first transceiver. Polley does not describe a multipoint system (as in the present invention) nor in any way describes "embedded modulations" as used in the present invention and as claimed, although not in those words. Polley describes a point-to-point-only two modem system in which each modem may host two transceivers (or a single transceiver capable of communicating via one of two modulations) and a rate negotiating means to select which modulation is to be used, such negotiation occurring at the beginning of a communication session. This is completely different from "embedded modulations, which provides for true multipoint communication (a master on two or more tributaries) in which communication with all tributaries occurs during a communication

Rembrandt Wireless
Ex. 2012
Apple Inc. v. Rembrandt Wireless Technologies, LP, IPR2020-00033
Page 629

DEF0007508
IPR2020-00036 Page 00629
004

session using two or more modulations. In essence, such an arrangement as shown by Polley *et al.* is discussed in some detail in the Background of the Invention portion of the present application, see, for example, page 1, lines 19 through 30 and page 2, lines 1 through 8. See also, page 5, lines 8 through 30 and page 6, lines 1 through 26. Thus, the Polley *et al.* disclosure is prior art and is acknowledged as such, although not specifically, and does not disclose a multipoint system as claimed by applicant..

The present invention is directed to the use of differing transceivers responsive to different modulation methods to the exclusion of other modulation methods, which clearly is not shown in Polley *et al.* Accordingly, claim 23 has been amended to call for two additional transceivers, instead of one, each being capable of receiving and transmitting at least one of the modulation methods of a first transceiver to the exclusion of the modulation method transmitted and received by another one of the transceivers. Clearly, Polley *et al.* does not disclose such an arrangement and claim 23, as amended, is, therefore, believed to be allowable.

In a similar manner, claim 25 has been amended to include the remote transceiver of claim 27 and the added limitation that the remote transceiver does not transmit and receive all of the modulation methods of the master transceiver. This is apparently not shown or suggested by Polley *et al.*, hence amended claim 25 is believed to be allowable.

In view of the combining of claims 25 and 27, claims 27 and 28 have been canceled without prejudice.

The drawings will be amended to include the legend "Prior Art" with Fig. 2. A copy of Fig. 2 marked up with red permanent ink is attached hereto.

Rembrandt Wireless
Ex. 2012
Apple Inc. v. Rembrandt Wireless Technologies, LP, IPR2020-00033
Page 630

DEF0007509
IPR2020-00036 Page 00630
005

In view of the foregoing, it is respectfully submitted that all of the claims presently in the case are allowable over the art of record, and favorable action in that regard is earnestly solicited.

Respectfully submitted,

David P. Kelley; Reg. No. 17,420

THOMAS, KAYDEN,
HORSTEMEYER & RISLEY, L.L.P.
Suite 1750
100 Galleria Parkway N.W.
Atlanta, Georgia 30339
(770) 933-9500

ANNOTATED VERSION OF MODIFIED CLAIMS TO SHOW CHANGES MADE

22. (Once Amended) A computer readable medium having a program for controlling a second tributary transceiver using a secondary modulation method in a multipoint communication system, said communication system including a [second] first tributary [transceivers] transceiver using a primary modulation method for communication and a master transceiver, said program comprising:

first logic configured to receive information transmitted using said secondary modulation method; and

second logic configured to ignore transmissions on said communication medium using said primary modulation method.

23. (Once Amended) A multi-point communication system, comprising:

a first transceiver capable of transmitting and receiving a plurality of modulation methods; and

at least [one] two additional [transceiver] transceivers, each being capable of transmitting and receiving at least one of said plurality of modulation methods[.] to the exclusion of at least one of the modulation methods transmitted and received by the other one of said two transceivers.

Rembrandt Wireless
Ex. 2012
Apple Inc. v. Rembrandt Wireless Technologies, LP, IPR2020-00033
Page 632

DEF0007511
IPR2020-00036 Page 00632
007

25. (Once Amended) A master transceiver for use in a multi-point communication system, comprising:

logic configured to enable the master transceiver to communicate over the multi-point communication system using a plurality of modulation methods[.] ; and

a remote transceiver comprising:

a logic configured to enable the remote transceiver to communicate over the multi-point communication system using at least one of the modulation methods to the exclusion of others of said modulation methods.

Rembrandt Wireless
Ex. 2012
Apple Inc. v. Rembrandt Wireless Technologies, LP, IPR2020-00033
Page 633

DEF0007512
IPR2020-00036 Page 00633
008

Approved 12/09/01 PP

#5

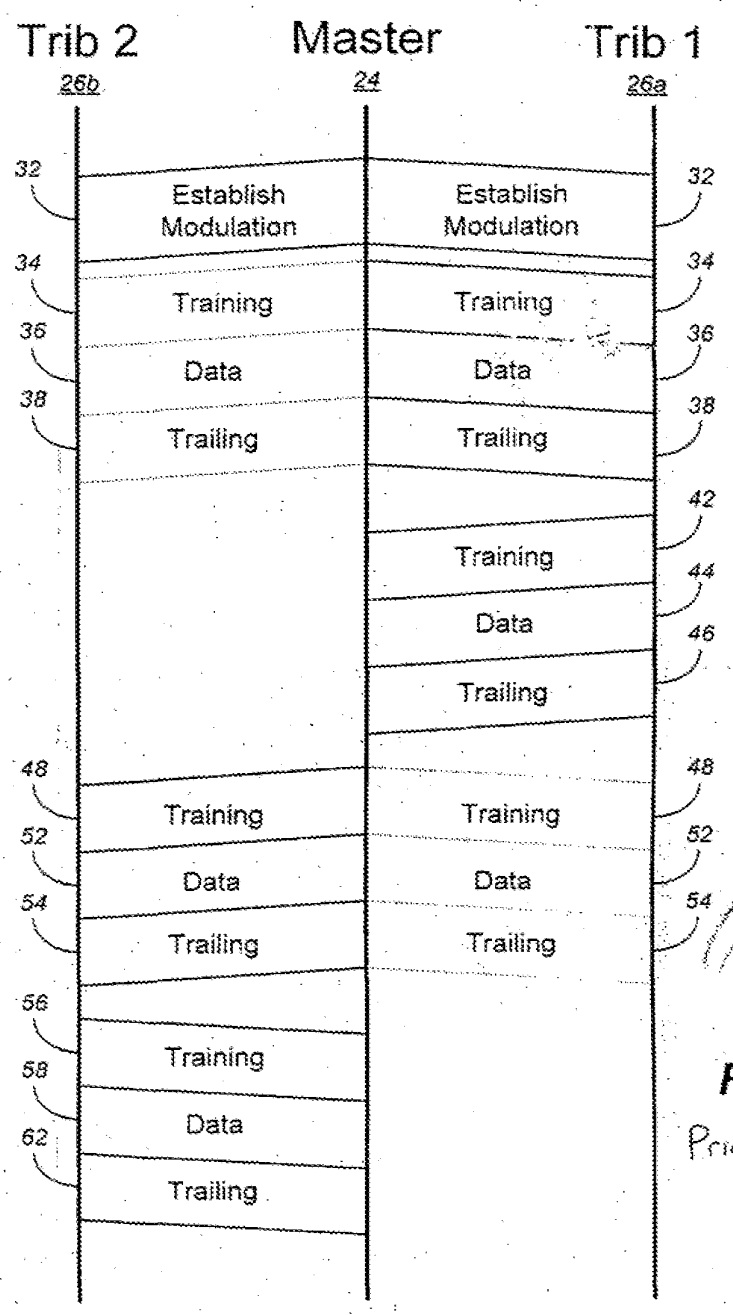

FIG. 2

Prior Art

FILE HISTORY
US 5,982,807

PATENT:	5,982,807
INVENTORS:	Snell, James Leroy
TITLE:	High data rate spread spectrum transceiver and associated methods
APPLICATION NO:	US1997819846A
FILED:	17 MAR 1997
ISSUED:	09 NOV 1999
COMPILED:	02 JUN 2016

BEST COPY

[redacted]

SCANNED

Class	Subclass	Issue Classification
375	267	

6982807

UTILITY SERIAL NUMBER	PATENT DATE	PATENT NUMBER
09/819846	[illegible]	6982807

SERIAL NUMBER	FILING DATE	CLASS	SUBCLASS	GROUP ART UNIT	EXAMINER
					[illegible]

APPLICANTS

[illegible]

Foreign priority claimed 35 USC 119 (a-d)/claims met	Verified and Acknowledged	AS FILED	STATE OR COUNTRY	SHEETS DRAWING	TOTAL CLAIMS	INDEP. CLAIMS	FILING FEE RECEIVED	ATTORNEY'S DOCKET NO.
[illegible]	[illegible]	[illegible]						

ADDRESS

[illegible]

TITLE

[illegible]

U.S. DEPT. OF COMM./PTO & TM—PTO-436L (Rev.12-94)

PARTS OF APPLICATION FILED SEPARATELY

Applications Examiner [illegible]

NOTICE OF ALLOWANCE MAILED		CLAIMS ALLOWED	
6-3-99	Mohammad Ghayour, Assistant Examiner	Total Claims: 61	First Claim: 1
ISSUE FEE		**DRAWINGS**	
Amount Due: 1210.00	Date Paid: 9-10-99	Sheets Drwg.: 8	Figs. Drwg.: 8 / First Fig.: 1
Label Area	STEPHEN CHIN, SUPERVISORY PATENT EXAMINER, GROUP 2700 — Primary Examiner	ISSUE BATCH NUMBER: T83	
	PREPARED FOR ISSUE		

WARNING: The information disclosed herein may be restricted. Unauthorized disclosure may be prohibited by the United States Code Title 35, Sections 122, 181 and 368. Possession outside the U.S. Patent & Trademark Office is restricted to authorized employees and contractors only.

Form PTO-436A (Rev. 6/95)

SCANNED [illegible]

5,982,807

HIGH DATA RATE SPREAD SPECTRUM TRANSCEIVER AND ASSOCIATED METHODS

Transaction History

Date	Transaction Description
03-17-1997	Information Disclosure Statement (IDS) Filed
03-17-1997	Information Disclosure Statement (IDS) Filed
04-17-1997	Initial Exam Team nn
07-16-1997	Notice Mailed--Application Incomplete--Filing Date Assigned
10-10-1997	Application Is Now Complete
10-16-1997	Application Dispatched from OIPE
10-16-1997	IFW Scan & PACR Auto Security Review
10-24-1997	Transfer Inquiry
10-28-1997	Case Docketed to Examiner in GAU
03-20-1998	Preexamination Location Change
03-24-1998	Transfer Inquiry
03-31-1998	Case Docketed to Examiner in GAU
11-09-1998	Non-Final Rejection
11-10-1998	Mail Non-Final Rejection
04-19-1999	Response after Non-Final Action
04-19-1999	Request for Extension of Time - Granted
04-24-1999	Date Forwarded to Examiner
06-03-1999	Mail Notice of Allowance
06-03-1999	Notice of Allowance Data Verification Completed
06-11-1999	Workflow - Drawings Finished
06-11-1999	Workflow - Drawings Matched with File at Contractor
06-11-1999	Workflow - Drawings Received at Contractor
06-11-1999	Workflow - Drawings Sent to Contractor
07-06-1999	Workflow - File Sent to Contractor
08-16-1999	Issue Fee Payment Verified
09-02-1999	Application Is Considered Ready for Issue
10-15-1999	Workflow - Complete WF Records for Drawings
10-29-1999	Issue Notification Mailed
11-09-1999	Recordation of Patent Grant Mailed

STAPLE HERE

U.S. GOVERNMENT PRINTING OFFICE: 1991-281-280

UNIT NUMBER	ORIGINAL CLASSIFICATION					
	CLASS: 375	SUBCLASS: 200				
LOCATION SERIAL NUMBER: 8/349,846	CROSS REFERENCE(S)					
	CLASS	SUBCLASS (ONE SUBCLASS PER BLOCK)				
INVENTOR'S NAME (PLEASE PRINT): James L. Snell	375	205	206	208	209	
REISSUE ORIGINAL PATENT NUMBER						
INTERNATIONAL CLASSIFICATION						
04 B 15/00						
	GROUP ART UNIT: 2734	ASSISTANT EXAMINER (PLEASE STAMP OR PRINT FULL NAME): Mohammad Ghayour				
		PRIMARY EXAMINER (PLEASE STAMP OR PRINT FULL NAME): Stephen Chin				

PTO 3-91) ISSUE CLASSIFICATION SLIP U.S. DEPARTMENT OF COMMERCE PATENT AND TRADEMARK OFFICE

POSITION		ID NO.	DATE
CLASSIFIER			
EXAMINER			
TYPIST			
VERIFIER			
CORPS CORR.			
SPEC. HAND			
FILE MAINT.			
DRAFTING			

INDEX OF CLAIMS

(LEFT INSIDE)

SEARCHED

Class	Sub.	Date	Exmr.
375	200	10/26/98	H. Cl.
375	205	"	"
	206	"	"
375	208	11/4/98	"
	209	"	"
	218	"	"
	279	"	"
	290	11/5/98	"
375	200	6/23/99	H. Cl.
375	205	"	"

INTERFERENCE SEARCHED

Class	Sub.	Date	Exmr.
375	200	5/23/99	H. Cl.

SEARCH NOTES

	Date	Exmr.
APS	10/26/98	H. Cl.
Shown	"	"
"	10/30/98	"
APS	11/4/98	"
Shown	"	"
Talked to Pat & I. Cook	"	"
Shown	11/5/98	"

(RIGHT OUTSIDE)

```
 * * * * * * * * * * * * * * * * * * * * * * * * * * * * * * * *
FILE 'USPAT' ENTERED AT 15:07:01 ON 03 NOV 1998

 * * * * * * * * * * * * * * * * * * * * * * * * * * * * * * * *
 *              W E L C O M E   T O   T H E                    *
 *        U. S.   P A T E N T   T E X T   F I L E              *
 * * * * * * * * * * * * * * * * * * * * * * * * * * * * * * * *

=> s modified walsh code or enhanced walsh code

        463709 MODIFIED
          1971 WALSH
        130149 CODE
             1 MODIFIED WALSH CODE
                 (MODIFIED(W)WALSH(W)CODE)
        294385 ENHANCED
          1971 WALSH
        130149 CODE
             0 ENHANCED WALSH CODE
                 (ENHANCED(W)WALSH(W)CODE)
L1           1 MODIFIED WALSH CODE OR ENHANCED WALSH CODE

=> d l1

1.  5,790,534, Aug. 4, 1998, Load control method and apparatus for CDMA
cellular system having circuit and packet switched terminals; Ismo Kokko,
et al., 370/335, 352, 441, 465; 455/452 (IMAGE AVAILABLE)
```

```
ASSWORD:
 * * * * * * RECONNECTED TO U.S. Patent & Trademark Office * * * * * *
SESSION RESUMED IN FILE 'USPAT' AT 15:11:52 ON 05 NOV 1998
FILE 'USPAT' ENTERED AT 15:11:52 ON 05 NOV 1998
=> d l1 kwic


US PAT NO:      5,790,534 [IMAGE AVAILABLE]             L1: 1 of 1

DETDESC:

DETD(24)

 In . . . the cells. Due to the dual channel QPSK modulation used, the
two data channels can be modulated with the same modified Walsh
code. QPSK modulation was selected because of its enhanced
interference randomization properties. In the reverse link dual channel
the offset QPSK. . .

=> s walsh code and dc

          1971 WALSH
        130149 CODE
           129 WALSH CODE
                (WALSH(W)CODE)
        136474 DC
L2           11 WALSH CODE AND DC

=> s l2 and modulator

         40499 MODULATOR
L3            4 L2 AND MODULATOR

=> s l3 and demodulator

         21201 DEMODULATOR
L4            3 L3 AND DEMODULATOR

=> d l4 1-3


1.  5,682,404, Oct. 28, 1997, Method and apparatus for signal
transmission and reception; William J. Miller, 375/222 [IMAGE AVAILABLE]

2.  5,675,581, Oct. 7, 1997, Simulating user interference in a spread
spectrum communication network; Samir S. Soliman, 370/252, 335; 375/200;
455/67.3 [IMAGE AVAILABLE]

3.  5,367,516, Nov. 22, 1994, Method and apparatus for signal
transmission and reception; William J. Miller, 370/203 [IMAGE AVAILABLE]

=> d l4 1-2 kwic


US PAT NO:      5,682,404 [IMAGE AVAILABLE]             L4: 1 of 3

SUMMARY:

BSUM(4)
```

As is known in the ar[illegible] modulator-demodulator (modem[illegible]) is an electronic device that [illegible]dulates transmitted signals and [illegible]demodulates received signals. The modem generally provides an interface between. . .

SUMMARY:

BSUM(12)

In accordance with the present invention a modem includes a modulator, for receiving on each of a plurality of modulator channels an input sample, wherein the modulator groups the first plurality of input samples to form an input data frame and wherein the modulator multiplies the input data frame by a first rotation matrix having a row dimension and a column dimension corresponding to the number of channels in the modulator to provide an output data frame corresponding to a modulated output signal. The modem further includes a demodulator, having a plurality of channels, for receiving a data frame corresponding to a modulated output signal provided from a first plurality of input samples, wherein the demodulator multiplies the received data frame by a second rotation matrix having a row dimension and a column dimension corresponding to the number of channels in the demodulator to provide a demodulated signal corresponding to an output data frame having a first plurality of output samples, wherein the demodulator provides on each of the demodulator channels a corresponding one of the first plurality of output samples wherein each of the output samples correspond to one. . . invertible transform is here provided by application of the rotation matrix. By multiplying each of the data frames in the modulator by the first rotation matrix a signal may be transmitted over a transmission link at a relatively high data rate. The modulated data frame may then be sent over a transmission link and received in a demodulator of a second modem. The demodulator demodulates the received modulated data frame by multiplying the received modulated data frame by a second rotation matrix which performs. . . a lower delay time than conventional techniques. A coding circuit may be coupled to at least one channel of the modulator to provided a coded modulated data frame. A corresponding decoding circuit may be coupled to a corresponding channel of the demodulator of the second modem to thus decode the coded modulated data frame. A timing circuit coupled between the first and. . .

SUMMARY:

BSUM(13)

In . . . and apparatus for providing a modem for sending digital data over an analog medium includes a synthesizer to provide a modulator and an analyzer to provide a demodulator. With this particular arrangement, digital data to be transmitted may be applied to the input ports of the synthesizer. In. . .

DETDESC:

DETD(19)

That is, the rows C.sub.1 -C.sub.4 of the rotation matrix C correspond to the components of the Walsh code vectors such that matrix multiplication between the rotation matrix C and the vector X is equivalent to the dot product. . .

DETDESC:

DETD(30)

a carrier in said first transmitter section using a carrier modulator.

US PAT NO: 5,675,581 [IMAGE AVAILABLE] L4: 2 of 3

DETDESC:

DETD(3)

In . . . system described in U.S. Pat. No. 5,103,459 referenced above, each cell-site, also referred to as a base station, has several modulator-demodulator units or direct sequence spread spectrum modems. Each modem is capable of communicating either voice or other types of data such as facsimile or computer data. Each modem consists of a digital spread spectrum transmit modulator, at least one digital spread spectrum data receiver and a searcher receiver. Each modem at the cell-site or base station. . .

DETDESC:

DETD(25)

The . . . signal combining interfacing with the MTSO. In a preferred embodiment, the control processor 48 will include a table of orthogonal Walsh code sequences for assignment to subscriber units.

DETDESC:

DETD(26)

Both . . . output of diversity combiner and decoder circuitry 50. Digital link 52 is also coupled to control processor 48, cell-site transmit modulator 54 and the MTSO digital switch (FIG. 1). Digital link 52 is utilized to communicate signals between the MTSO using cell-site transmit modulator 54 or circuitry 50, under the control of control processor 48.

DETDESC:

DETD(27)

Signals intended to be communicated to the one subscriber unit are provided via digital link 52 to transmit modulator 54 where they are modulated as a spread spectrum signal. The spread spectrum signal is then transferred to transmit power. . .

DETDESC:

DETD(68)

It . . . by the cell-site receiver. The z-domain transfer function of the filter 100 filter may be written as: ##EQU7## where the DC gain (z=0) is:

Walsh . . . vectors C.sub.1, C.sub.2. That is, substitution of a set of Walsh codes into a [illegible]mensional generator matrix pr[illegible]des a new Walsh code having twice the dimension. Using this procedure an N-dimensional transformation needed to provide an analyzer, may be provided. Thus, because. . .

DETDESC:

DETD(110)

Referring now to FIG. 5 a system for transmitting digital data over an analog medium 94 includes a modulator-demodulator (modem) 95 here only a modulator portion of the modem 95 being shown. The modem 95 includes a data assembly unit 96 for forming digital data. . .

DETDESC:

DETD(119)

At the demodulator portion, a signal tap 118 couples a portion of the signal transmitted over the transmission line 117 to an optional. . .

DETDESC:

DETD(125)

There . . . and not by way of limitation, the Walsh codes (also known as Hadamard codes) are described. The kernal for a Walsh code is provided as:

DETDESC:

DETD(143)

Furthermore, the modem described herein, being a modulator (the synthesizer) and a demodulator (the analyzer) may also take the form of a baseband RF or soundware transmitter modulator and receiver (or above baseband except for the limits of ADC's). Such a receiver may have application in receiving digital. . .

DETDESC:

DETD(167)

The . . . zeros or ones. Without scrambling, an input string of zeros will produce a modulated but strongly correlated output without a DC component.

DETDESC:

DETD(170)

Thus, . . . the matrix vectors are of length eight, then eight samples should be processed together as an independent group by the demodulator. That is, the demodulator multiplies the group of samples by the inverse matrix used in the modulator. It should be noted that the grouping of samples is part of the modulation and distinct, for example, from a. . .

CLAIMS:

CLMS(9)

9. . . . derived from said first digital bit stream by modulation of

DETDESC:

DETD(10)

The . . . enough to cause saturation. Moreover, since the receiver depicted in FIG. 2 is a homodyne receiver, it suffers from high DC offset on the outputs of mixers 22 and 23 and amplifiers 27 and 28 which further limits the amount of amplification. . . receiver, is typically in the center of the desired receive frequency channel, giving rise to coherent interference. The problem of DC offset can be alleviated as described in U.S. Pat. No. 5,241,702 to Paul W. Dent entitled "DC offset Compensation" which is incorporated here by reference. As discussed in more detail in this patent, the troublesome DC offsets are. . .

DETDESC:

DETD(64)

It . . . a page using either a first code or a second code, the codes being chosen to be maximally different, e.g. orthogonal codes. The base receiver then performs the above correlation process using both codes and whichever yields the largest correlation is deemed. . .

DETDESC:

DETD(69)

If . . . This may be repeated using other codes such as a code indicating further data was transmitted and one or more orthogonal codes or dummy codes to obtain a threshold value, and the composite magnitudes compared against the threshold value to determine if. . .

DRAWING DESC:

DRWD(5)

FIGS. . . . with the present invention, and each show a Venn diagram or logic map showing how two antipodal sets of mutually **orthogonal codes** according to the present invention can be constructed using the generator of FIG. 1 or the generator of FIG. 1A;

DETDESC:

DETD(30)

The . . . . PN code to form the MOD I-PN code and the MOD Q-PN code is illustrated in FIG. 7. Producing an **orthogonal code** pair for this composite sequence is accomplished as follows. The second composite code is produced tapping off a second phase. . .

DETDESC:

DETD(47)

A system which uses QPSK spreading needs **orthogonal codes** for the I and Q channels. The MOD I and MOD Q codes are also produced from the same component. . .

DETDESC:

DETD(49)

As . . . . Z codes are ANDed together to get an imbalanced code with 1/4 ones and 3/4 zeros resulting in a 50% DC **offset**. The X code is modulo-2 combined with this Y.cndot.Z. for one application, it is desired that the X code have. . .

DETDESC:

DETD(50)

In . . . . to maintain true QPSK and avoid susceptibility to a squaring interceptor. With our NAND code, the Y.multidot.Z has a 50% DC **offset** to allow a partial correlation of X codes during acquisition. Since for this example the same X code is used. . .

DETDESC:

DETD(54)

Note the 50% DC **offset** of the Y.multidot.Z code since 3/4 of all bits are 0. If two new codes or two additional phases of. . .

DETDESC:

DETD(146)

Some . . . . combining data with the resulting PN codes. Such apparatus and method is particularly well suited to producing a plurality of **orthogonal code** pairs, all composed of a single set of component codes. Such apparatus and method are useful for producing I and. . .

=> d l1 2-2 kwic

US PAT NO: 5,708,971 [IMAGE AVAILABLE] L1: 2 of 7

may occur can be compensated at the receiving radio using the technique for DC offset compensation disclosed in commonly assigned U.S. Pat. No. 5,241,702 to Paul W. Dent entitled "D.C. Offset Compensation in a Radio. . .

DETDESC:

DETD(193)

For . . . Transform Processor", which is incorporated here by reference, provides an efficient means to correlate a signal simultaneously with all possible orthogonal codewords and thus directly determine the residual, non-cancelled interference amounts. If however the number of signals whose residual interference contributions are. . . be discriminated is greater than 16, for example 37, then 15 at a time can be arranged to use different orthogonal codewords while the other 22 use the 16th codeword. The 15 which are chosen to use different codewords can be changed. . .

DETDESC:

DETD(194)

This . . . and filed on Jan. 11, 1994, then the system can readily search simultaneously for known sync patterns employing all four orthogonal codes. By permuting the underlying sync patterns as described above, it is possible to discriminate residual interference contributions from any number. . .

DETDESC:

DETD(205)

The . . . performed at the same time by means of an orthogonal transform such as the Walsh-Hadamard transform. If the number of orthogonal codewords available is less than the number of signals M, the orthogonal codewords can be assigned to groups of immediately surrounding beams or cells whose signals are most likely to interfere due to imperfect cancellation. A limit set of orthogonal codewords can be permuted between the M signals to allow different subsets to be resolved at a time, and all M. . . sequentially. In this way, by correlating the received signals Rs over the portion containing the known signal pattern with all orthogonal codewords the amount of own codeword is obtained as well as the amount of unwanted codewords. The amount of other codewords. . .

=> s l1 5-5 kwic

MISSING OPERATOR 'L1 5-5'

=> d l1 5-5 kwic

US PAT NO: 5,598,154 [IMAGE AVAILABLE] L1: 5 of 7

SUMMARY:

BSUM(23)

Briefly, . . . a second phase of one of the component codes and inverting another phase of that component code to produce two orthogonal codes from the same sequences. The resulting composite I and Q codes have certain desirable partial correlation properties, which result from. . .

Referring . . . (FAX) signal or alternatively the shared signal S.sub.2 may be provided from additional modems of the same type operating with orthogonal code sequences.

DETDESC:

DETD(119)

At the demodulator portion, a signal tap 118 couples a portion of the signal transmitted over the transmission line 117 to an optional. . .

DETDESC:

DETD(135)

Several . . . may operate simultaneously over the same link, within the constraint of total link power. Each modem should use a different orthogonal code. For example, a code 3 modem would not interfere with a code 2 modem. It should be noted that the. . .

DETDESC:

DETD(143)

Furthermore, the modem described herein, being a modulator (the synthesizer) and a demodulator (the analyzer) may also take the form of a baseband RF or soundware transmitter modulator and receiver (or above baseband. . .

DETDESC:

DETD(146)

In . . . tree modem 126 operates such that the coder circuit performs a coding operation of multiplying a data word times an orthogonal code C. The decoder performs a correlation operation here denoted C . It should be noted that the final V' input. . .

DETDESC:

DETD(167)

The . . . zeros or ones. Without scrambling, an input string of zeros will produce a modulated but strongly correlated output without a DC component.

DETDESC:

DETD(170)

Thus, . . . the matrix vectors are of length eight, then eight samples should be processed together as an independent group by the demodulator. That is, the demodulator multiplies the group of samples by the inverse matrix used in the modulator. It should be noted that the grouping. . .

```
FILE 'USPAT' ENTERED AT 10:05:10 ON 29 OCT 1998

  * * * * * * * * * * * * * * * * * * * * * * * * * * * * * * *
  *              W E L C O M E   T O   T H E                 *
  *        U. S.   P A T E N T   T E X T   F I L E           *
  * * * * * * * * * * * * * * * * * * * * * * * * * * * * * * *

=> s orthogonal code? and dc offset

         57159 ORTHOGONAL
        168988 CODE?
           304 ORTHOGONAL CODE?
                 (ORTHOGONAL(W)CODE?)
        136208 DC
        221363 OFFSET
          3232 DC OFFSET
                 (DC(W)OFFSET)
L1            7 ORTHOGONAL CODE? AND DC OFFSET

=> d l1 1-7


1.  5,812,947, Sep. 22, 1998, Cellular/satellite communications systems
with improved frequency re-use; Paul W. Dent, 455/427, 12.1, 83, 67.3,
69, 103 [IMAGE AVAILABLE]

2.  5,708,971, Jan. 13, 1998, Two-way paging system and apparatus; Paul
W. Dent, 455/38.3; 340/825.44; 455/343 [IMAGE AVAILABLE]

3.  5,631,898, May 20, 1997, Cellular/satellite communications system
with improved frequency re-use; Paul W. Dent, 370/203; 342/373; 370/319,
330; 455/13.2, 25 [IMAGE AVAILABLE]

4.  5,619,503, Apr. 8, 1997, Cellular/satellite communications system
with improved frequency re-use; Paul W. Dent, 370/330, 335, 337; 375/296;
455/63, 450, 501 [IMAGE AVAILABLE]

5.  5,598,154, Jan. 28, 1997, Apparatus and method for generating and
utilizing pseudonoise code sequences; Michael L. Wilson, et al., 341/50;
364/717.01; 375/208; 380/46 [IMAGE AVAILABLE]

6.  5,594,941, Jan. 14, 1997, A cellular/satellite communications system
with generation of a plurality of sets of intersecting antenna beams;
Paul W. Dent, 455/13.4; 370/310, 330; 455/13.3, 20, 428 [IMAGE AVAILABLE]

7.  5,555,257, Sep. 10, 1996, Cellular/satellite communications system
with improved frequency re-use; Paul W. Dent, 370/319; 342/352; 370/329;
455/13.3, 63, 428 [IMAGE AVAILABLE]

=> d l1 kwic


US PAT NO:     5,812,947 [IMAGE AVAILABLE]            L1: 1 of 7

DETDESC:

DETD(40)

 Consequently . . . a signal significantly, and such disturbance as
```

```
 * * * * * * * * * * * * * * * * * * * * * * * * * * * * * * * *
FILE 'USPAT' ENTERED AT 07:27:04 ON 29 OCT 1998

 * * * * * * * * * * * * * * * * * * * * * * * * * * * * * * * *
 *              W E L C O M E   T O   T H E                    *
 *        U. S.   P A T E N T   T E X T   F I L E              *
 * * * * * * * * * * * * * * * * * * * * * * * * * * * * * * * *

=> s demodulator

L1        21166 DEMODULATOR

=> s l1 and orthogonal code

          57159 ORTHOGONAL
         129687 CODE
            167 ORTHOGONAL CODE
                  (ORTHOGONAL(W)CODE)
L2           85 L1 AND ORTHOGONAL CODE

=> s l2 and dc signal

         136208 DC
         583396 SIGNAL
           8069 DC SIGNAL
                  (DC(W)SIGNAL)
L3            0 L2 AND DC SIGNAL

=> s l2 and zero frequency signal

         340446 ZERO
         365611 FREQUENCY
         583396 SIGNAL
             42 ZERO FREQUENCY SIGNAL
                  (ZERO(W)FREQUENCY(W)SIGNAL)
L4            0 L2 AND ZERO FREQUENCY SIGNAL

=> s l2 and dc offset

         136208 DC
         221263 OFFSET
           3232 DC OFFSET
                  (DC(W)OFFSET)
L5            0 L2 AND DC OFFSET

=> s l2 and dc component

         136208 DC
         567473 COMPONENT
           7791 DC COMPONENT
                  (DC(W)COMPONENT)
L6            2 L2 AND DC COMPONENT

=> d l6 1-2


1.  5,682,404, Oct. 28, 1997, Method and apparatus for signal
transmission and reception; William J. Miller, 375/222 (IMAGE AVAILABLE)
```

2. 5,367,916, Nov. 22, 1994, Method and apparatus for signal transmission and recept[illegible] William J. Miller, 370/203 [IMAGE AVAILABLE]

=> d l6 kwic

US PAT NO: 5,582,404 [IMAGE AVAILABLE] L6: 1 of 2

SUMMARY:

BSUM(4)

As is known in the art, a modulator-~~demodulator~~ (modem) is an electronic device that modulates transmitted signals and demodulates received signals. The modem generally provides an interface between. . .

SUMMARY:

BSUM(12)

In . . . in the modulator to provide an output data frame corresponding to a modulated output signal. The modem further includes a ~~demodulator~~, having a plurality of channels, for receiving a data frame corresponding to a modulated output signal provided from a first plurality of input samples, wherein the ~~demodulator~~ multiplies the received data frame by a second rotation matrix having a row dimension and a column dimension corresponding to the number of channels in the ~~demodulator~~ to provide a demodulated signal corresponding to an output data frame having a first plurality of output samples, wherein the ~~demodulator~~ provides on each of the ~~demodulator~~ channels a corresponding one of the first plurality of output samples wherein each of the output samples correspond to one. . . relatively high data rate. The modulated data frame may then be sent over a transmission link and received in a ~~demodulator~~ of a second modem. The ~~demodulator~~ demodulates the received modulated data frame by multiplying the received modulated data frame by a second rotation matrix which performs. . . to provided a coded modulated data frame. A corresponding decoding circuit may be coupled to a corresponding channel of the ~~demodulator~~ of the second modem to thus decode the coded modulated data frame. A timing circuit coupled between the first and. . .

SUMMARY:

BSUM(13)

In . . . sending digital data over an analog medium includes a synthesizer to provide a modulator and an analyzer to provide a ~~demodulator~~. With this particular arrangement, digital data to be transmitted may be applied to the input ports of the synthesizer. In. . .

DETDESC:

DETD(110)

Referring now to FIG. 5 a system for transmitting digital data over an analog medium 94 includes a modulator-~~demodulator~~ (modem) 95 here only a modulator portion of the modem 95 being shown. The modem 95 includes a data assembly. . .

DETDESC:

DETD(117)

US005982807A

United States Patent [19]

Snell

[11] **Patent Number: 5,982,807**

[45] **Date of Patent: Nov. 9, 1999**

[54] **HIGH DATA RATE SPREAD SPECTRUM TRANSCEIVER AND ASSOCIATED METHODS**

[75] Inventor: **James Leroy Snell**, Palm Bay, Fla.

[73] Assignee: **Harris Corporation**, Palm Bay, Fla.

[21] Appl. No.: **08/819,846**

[22] Filed: **Mar. 17, 1997**

[51] **Int. Cl.**[6] **H04B 15/00**

[52] **U.S. Cl.** **375/200**; 375/205; 375/206, 375/208; 375/209

[58] **Field of Search** 375/200, 203, 375/206, 208, 209, 210, 279, 280

[56] **References Cited**

U.S. PATENT DOCUMENTS

4,626,796	12/1986	Elder	331/3 A
5,103,459	4/1992	Gilhousen et al.	375/1
5,309,474	5/1994	Gilhousen et al.	375/1
5,367,516	11/1994	Miller	370/19
5,416,797	5/1995	Gilhousen et al.	375/205
5,467,365	11/1995	Jon	375/208
5,515,396	5/1996	Dolekotzin	375/208
5,535,220	7/1996	Padovani et al.	375/205
5,577,025	11/1996	Skinner et al.	370/22
5,598,434	1/1997	Wilson et al.	341/50
5,621,752	4/1997	Antonio et al.	375/200
5,659,573	8/1997	Bruckert et al.	375/203
5,682,404	10/1997	Miller	375/222
5,790,534	8/1998	Kokko et al.	370/335

OTHER PUBLICATIONS

Harris Corporation Application Note entitled "Harris PRISM Chip Set", No. AN9614, Mar. 1996.

Harris Corporation, "PRISM 2.4 GHz Chip Set", File No. 4063.4, Oct. 1996.

Harris Corporation Tech Brief entitled "A Brief Tutorial on Spread Spectrum and Packet Radio", No. TB337.1, May 1996.

Harris Corporation, "Direct Sequence Spread Spectrum Baseband Processor", File No. 4064.4, Oct. 1996.

Primary Examiner—Stephen Chin
Assistant Examiner—Mohammad Ghayour
Attorneys Agent, or Firm—Allen, Dyer, Doppelt, Milbrath & Gilchrist, P.A.

[57] **ABSTRACT**

A spread spectrum radio transceiver includes a high data rate baseband processor and a radio circuit connected thereto. The baseband processor preferably includes a modulator for spread spectrum phase shift keying (PSK) modulating information for transmission via the radio circuit. The modulator may include at least one modified Walsh code function encoder for encoding information according to a modified Walsh code for substantially reducing an average DC signal component to thereby enhance overall system performance when AC-coupling the received signal through at least one analog-to-digital converter in the demodulator. The demodulator is for spread spectrum PSK demodulating information received from the radio circuit. The modulator and demodulator are each preferably operable in one of a bi-phase PSK (BPSK) mode at a first data rate and a quadrature PSK (QPSK) mode at a second data rate. These formats may also be switched on-the-fly in the demodulator. Method aspects are also disclosed.

61 Claims, 8 Drawing Sheets

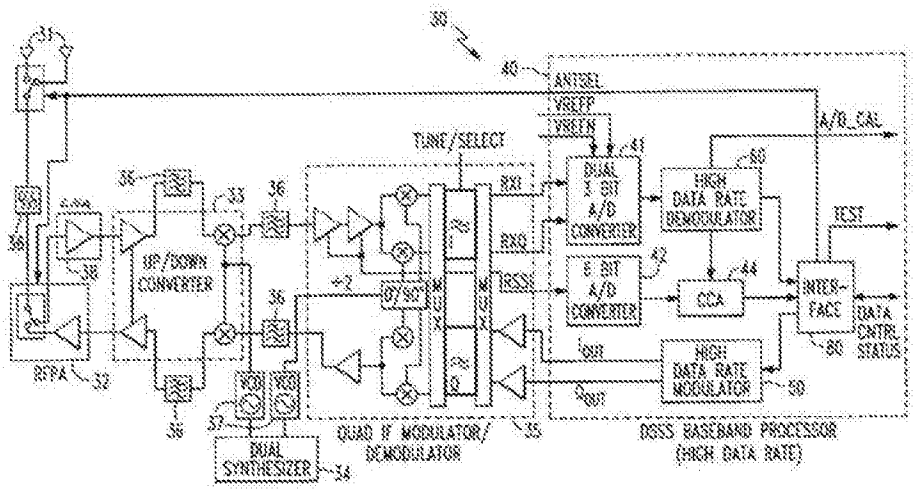

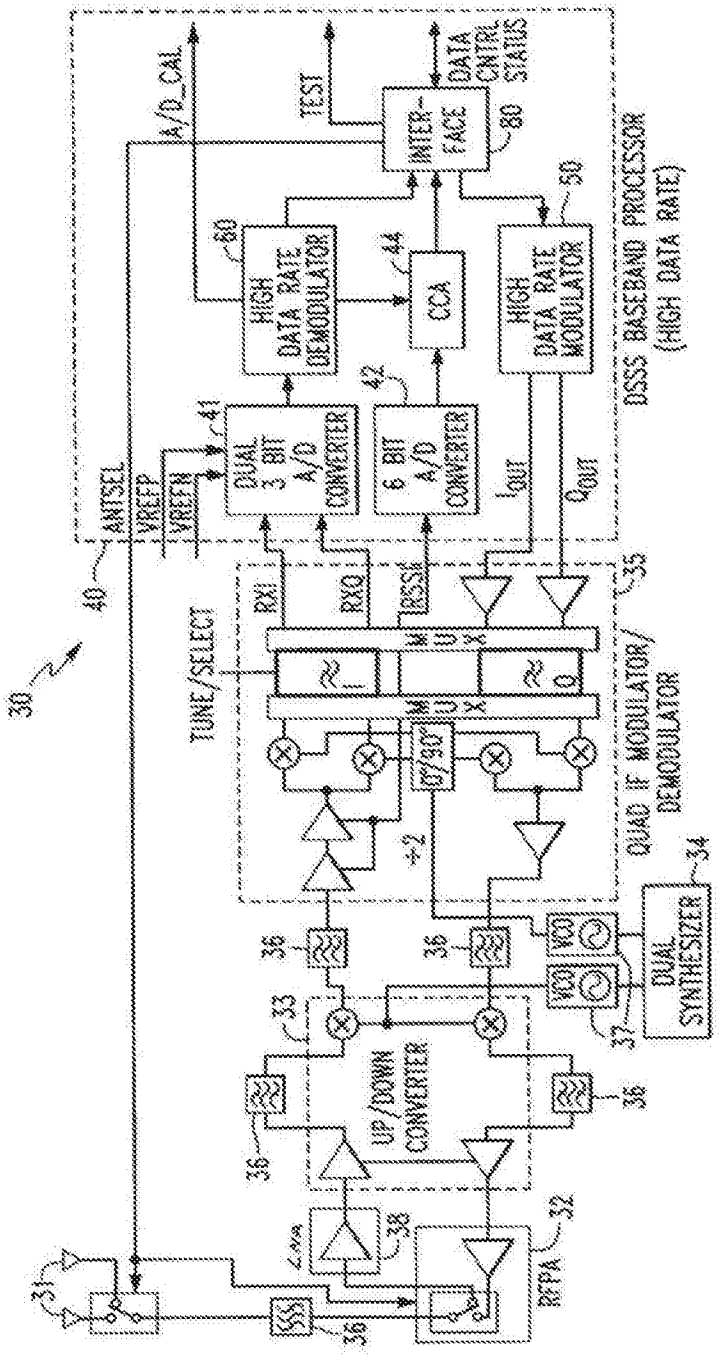
30
40
ANTSEL
VREFP
VREFN
A/D_CAL
TEST
INTER-FACE
80
DATA CNTRL STATUS
DSSS BASEBAND PROCESSOR (HIGH DATA RATE)
HIGH DATA RATE DEMODULATOR
60
CCA
44
HIGH DATA RATE MODULATOR
50
DUAL 3 BIT A/D CONVERTER
41
6 BIT A/D CONVERTER
42
IOUT
QOUT
RXI
RXQ
RSSI
35
TUNE/SELECT
QUAD IF MODULATOR/ DEMODULATOR
0°/90°
+2
34
DUAL SYNTHESIZER
VCO
37
36
33
UP/DOWN CONVERTER
38
RFPA
32
31
39

FIG. 1

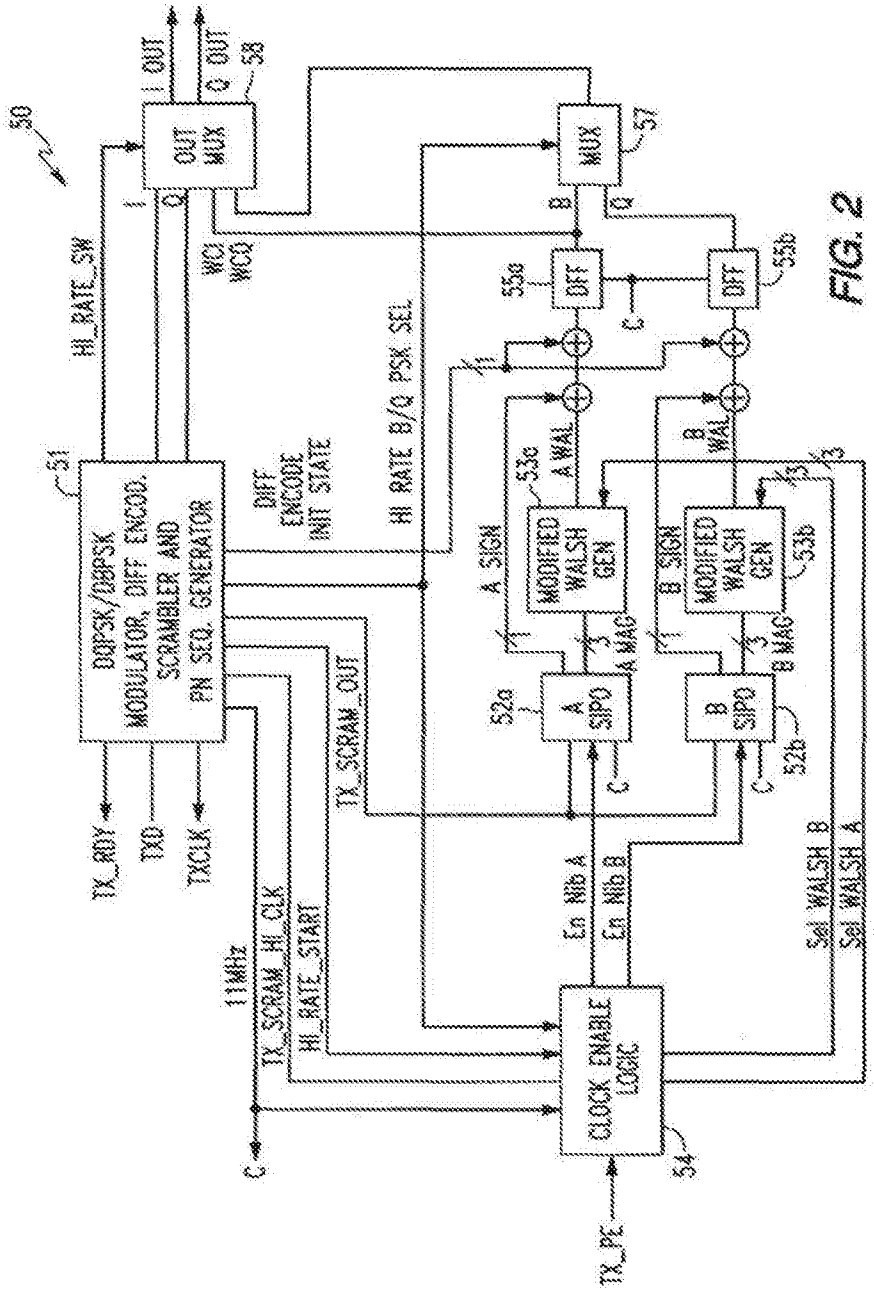
50
51
DQPSK/DBPSK MODULATOR, DIFF ENCOD. SCRAMBLER AND PN SEQ. GENERATOR
HI_RATE_SW
TX_RDY
TXD
TXCLK
11MHz
TX_SCRAM_HI_CLK
HI_RATE_START
C
DIFF. ENCODE INIT STATE
HI RATE B/Q PSK SEL
TX_SCRAM_OUT
OUT MUX
58
I
Q
I OUT
Q OUT
WCI
WCQ
MUX
57
B
Q
53a
DIFF
53b
DIFF
C
A SIGN
A WAL
53a
MODIFIED WALSH GEN
B SIGN
B WAL
53b
MODIFIED WALSH GEN
A MAG
B MAG
52a
A SIPO
52b
B SIPO
C
En Nib A
En Nib B
Sel WALSH B
Sel WALSH A
CLOCK ENABLE LOGIC
54
TX_PE

FIG. 2

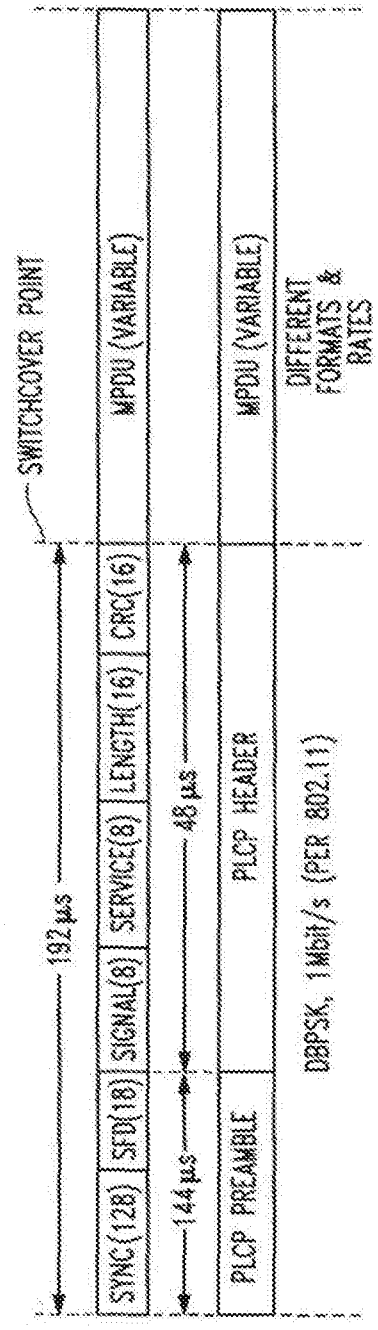
SWITCHOVER POINT
192 µs
SYNC(128)
SFD(16)
SIGNAL(8)
SERVICE(8)
LENGTH(16)
CRC(16)
MPDU (VARIABLE)
144 µs
48 µs
PLCP PREAMBLE
PLCP HEADER
MPDU (VARIABLE)
DBPSK, 1Mbit/s (PER 802.11)
DIFFERENT FORMATS & RATES

FIG. 3

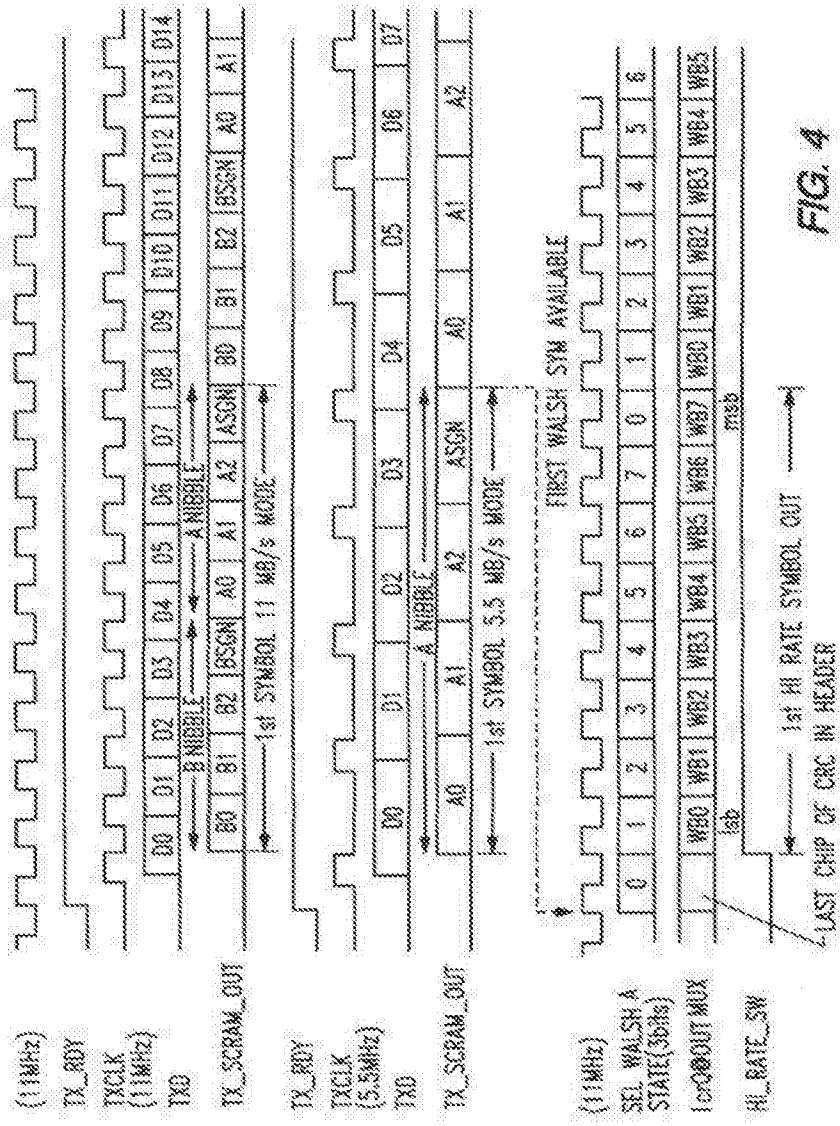
(11MHz)
TX_RDY
TXCLK (11MHz)
TX0
TX_SCRAM_OUT
B NIBBLE
A NIBBLE
1st SYMBOL 11 MB/s MODE
TX_RDY
TXCLK (5.5MHz)
TX0
TX_SCRAM_OUT
A NIBBLE
1st SYMBOL 5.5 MB/s MODE
FIRST WALSH SYM AVAILABLE
(11MHz)
SEL_WALSH_A STATE(3bits)
lsb
msb
1st HI RATE SYMBOL OUT
LAST CHIP OF CRC IN HEADER
HI_RATE_SW

FIG. 4

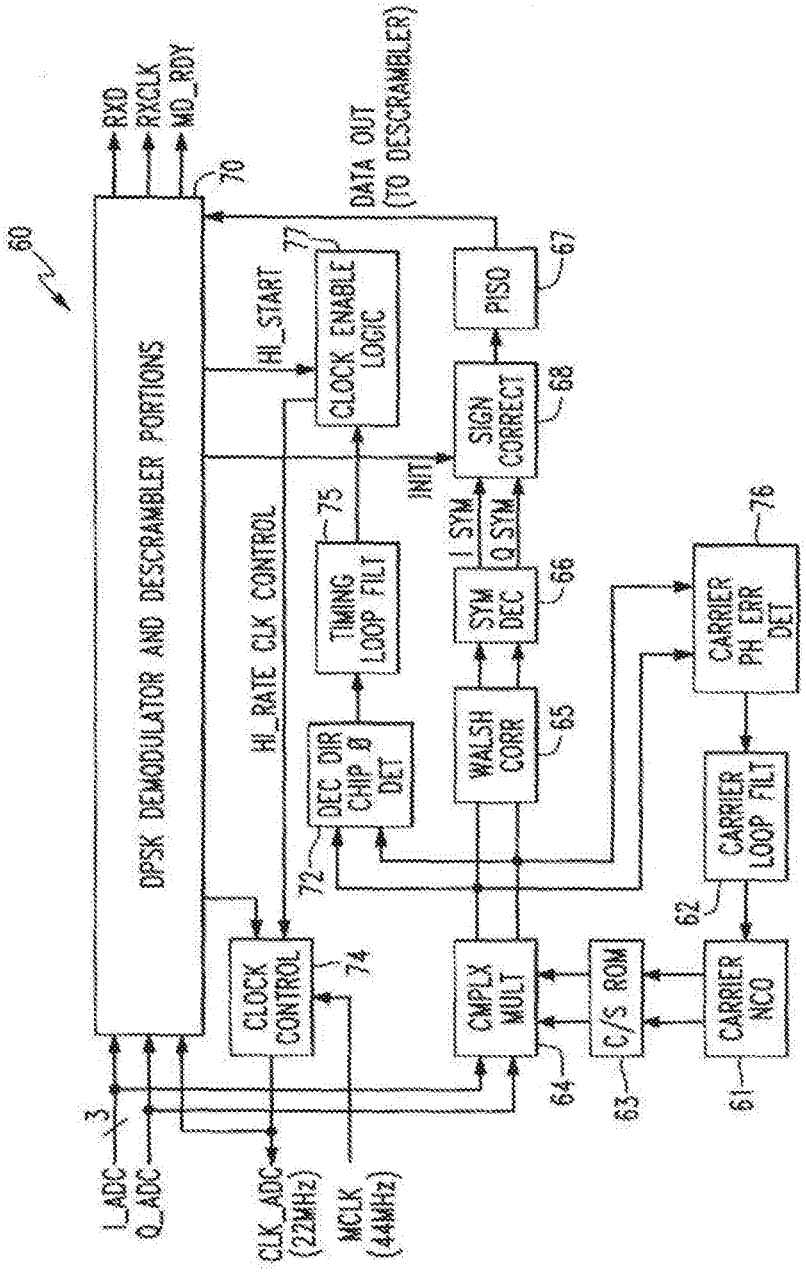
60
DPSK DEMODULATOR AND DESCRAMBLER PORTIONS
RXD
RXCLK
WD_RDY
70
DATA OUT
(TO DESCRAMBLER)
HI_START
77
CLOCK ENABLE LOGIC
PISO
67
SIGN CORRECT
68
INIT
I SYM
Q SYM
HI_RATE CLK CONTROL
75
TIMING LOOP FILT
SYM DEC
66
76
CARRIER PH ERR DET
DEC DIR CHIP 0 DET
WALSH CORR
65
72
CARRIER LOOP FILT
62
CLOCK CONTROL
74
CMPLX MULT
C/S ROM
CARRIER NCO
64
63
61
3
I_ADC
Q_ADC
CLK_ADC
(22MHz)
MCLK
(44MHz)

FIG. 5

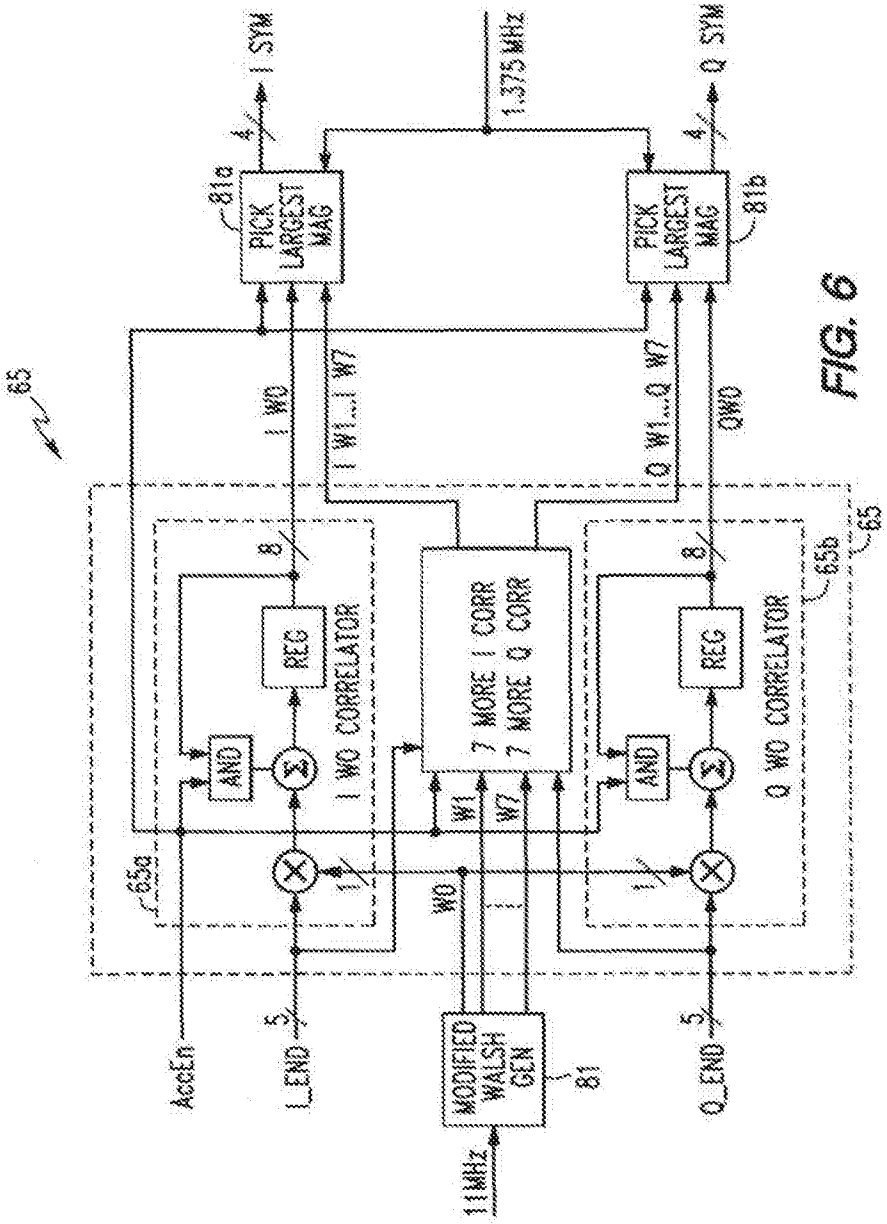
65
I SYM
1.375 MHz
Q SYM
81a
PICK LARGEST MAG
81b
I W0
I W1...I W7
Q W1...Q W7
QW0
8
REG
AND
I W0 CORRELATOR
7 MORE I CORR
7 MORE Q CORR
Q W0 CORRELATOR
65a
65b
W1
W7
W0
AccEn
I_END
Q_END
MODIFIED WALSH GEN
81
11 MHz

FIG. 6

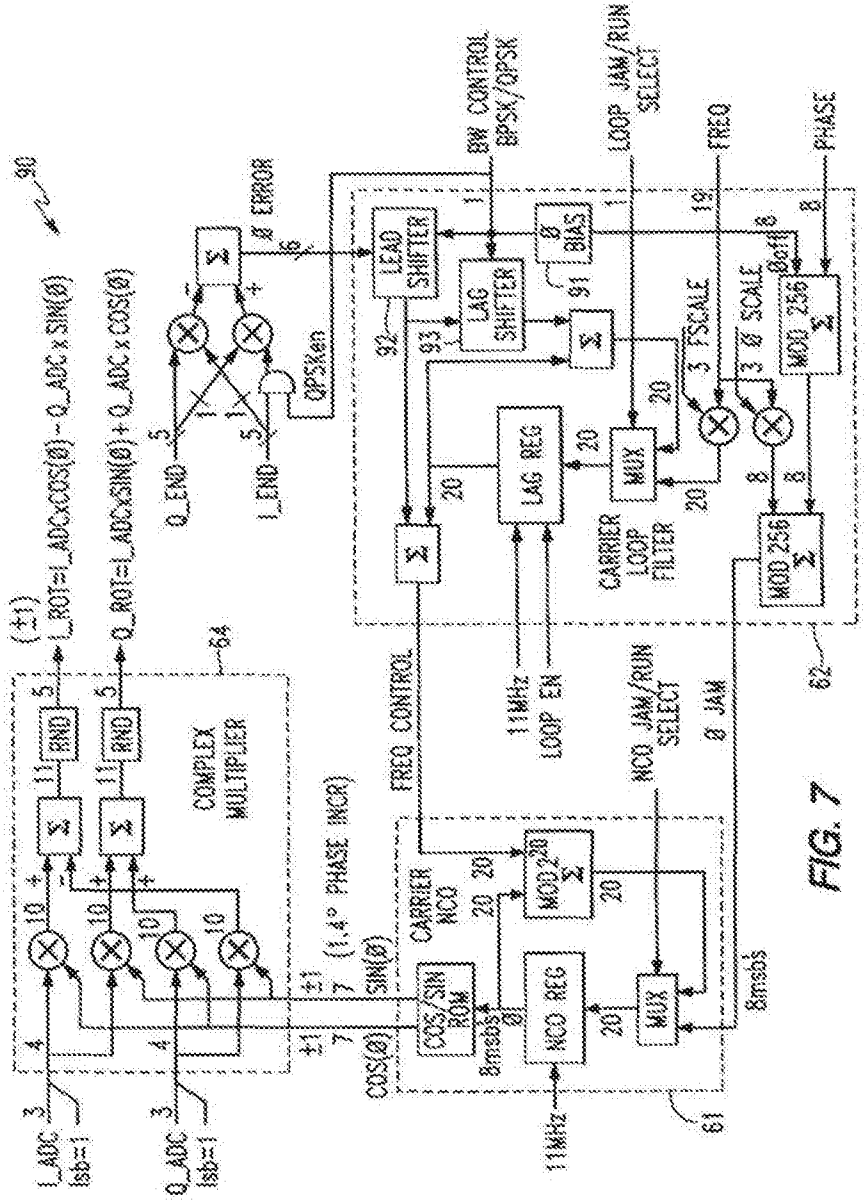
90
I_ADC
Iab=1
Q_ADC
Iab=1
COMPLEX MULTIPLIER
64
I_ROT=I_ADCxCOS(Ø) - Q_ADC x SIN(Ø)
Q_ROT=I_ADCxSIN(Ø)+Q_ADC x COS(Ø)
(±1)
RND
Q_END
I_END
QPSKen
Ø ERROR
COS(Ø)
SIN(Ø)
(1.4° PHASE INCR)
COS/SIN ROM
8msb5
CARRIER NCO
MOD 2^20
NCO REG
MUX
NCO JAM/RUN SELECT
Ø JAM
11MHz
61
FREQ CONTROL
LEAD SHIFTER
LAG SHIFTER
Ø BIAS
LAG REG
CARRIER LOOP FILTER
3 TSCALE
3 Ø SCALE
MOD 256
BW CONTROL BPSK/QPSK
LOOP JAM/RUN SELECT
FREQ
PHASE
11MHz
LOOP EN
62

FIG. 7

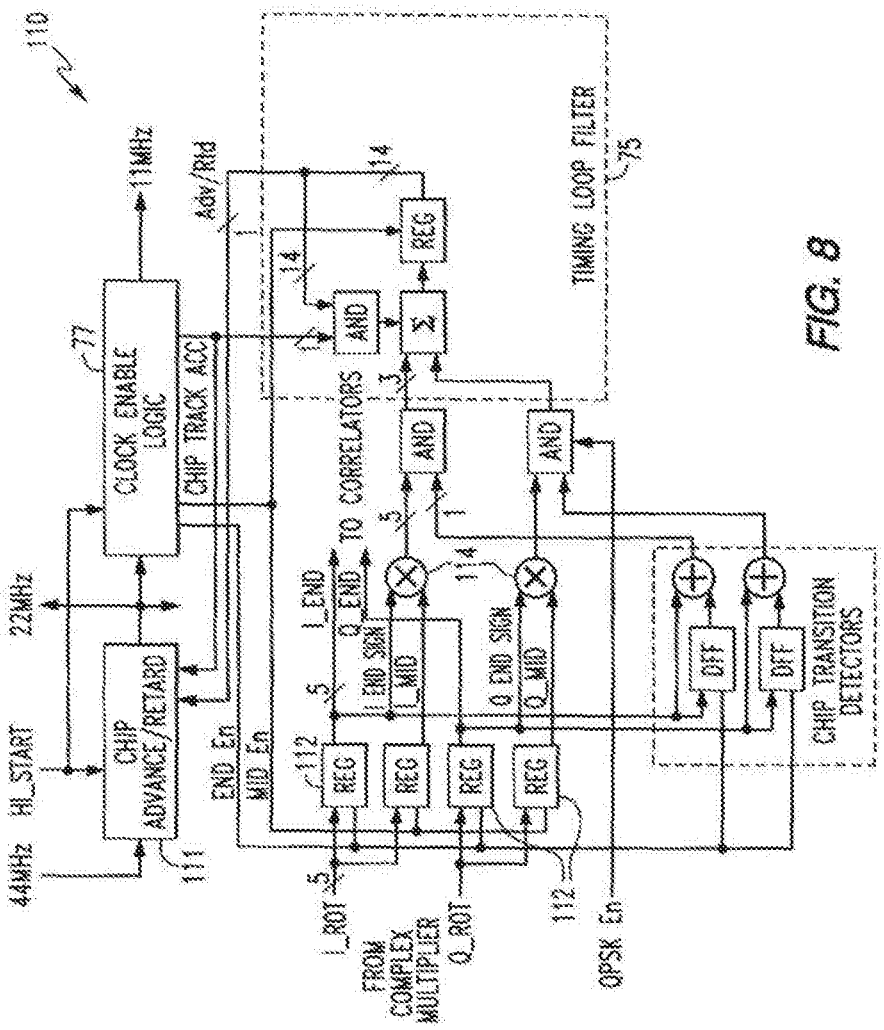
110
11MHz
Adv/Rtd
77
CLOCK ENABLE LOGIC
CHIP TRACK ACC
22MHz
HI_START
44MHz
CHIP ADVANCE/RETARD
111
END En
MID En
112
REG
I_ROT
FROM COMPLEX MULTIPLIER
Q_ROT
I_END
Q_END
TO CORRELATORS
END SIGN
I_MID
Q END SIGN
Q_MID
AND
Σ
14
TIMING LOOP FILTER
75
DIFF
CHIP TRANSITION DETECTORS
QPSK En

FIG. 8

HIGH DATA RATE SPREAD SPECTRUM TRANSCEIVER AND ASSOCIATED METHODS

FIELD OF THE INVENTION

The invention relates to the field of communication electronics, and, more particularly, to a spread spectrum transceiver and associated methods.

BACKGROUND OF THE INVENTION

Wireless or radio communication between separated electronic devices is widely used. For example, a wireless local area network (WLAN) is a flexible data communication system that may be an extension to, or an alternative for, a wired LAN within a building or campus. A WLAN uses radio technology to transmit and receive data over the air, thereby reducing or minimizing the need for wired connections. Accordingly, a WLAN combines data connectivity with user mobility, and, through simplified configurations, also permits a movable LAN.

Over the past several years, WLANs have gained acceptance among a number users including, for example, healthcare, retail, manufacturing, warehousing, and academic areas. These groups have benefited from the productivity gains of using hand-held terminals and notebook computers, for example, to transmit real-time information to centralized hosts for processing. Today WLANs are becoming more widely recognized and used as a general purpose connectivity alternative for an even broader range of users. In addition, a WLAN provides installation flexibility and permits a computer network to be used in situations where wireline technology is not practical.

In a typical WLAN, an access point provided by a transceiver, that is, a combination transmitter and receiver, connects to the wired network from a fixed location. Accordingly, the access transceiver receives, buffers, and transmits data between the WLAN and the wired network. A single access transceiver can support a small group of collocated users within a range of less than about one hundred to several hundred feet. The end users connect to the WLAN through transceivers which are typically implemented as PC cards in a notebook computer, or ISA or PCI cards for desktop computers. Of course the transceiver may be integrated with any device, such as a hand-held computer.

The assignee of the present invention has developed and manufactured a set of integrated circuits for a WLAN under the mark PRISM 1 which is compatible with the proposed IEEE 802.11 standard. The PRISM 1 chip set is further described in Harris Corporation Application Note entitled "Harris PRISM Chip Set", No. AN9614, March 1996; and also in a publication entitled "PRISM 2.4 GHz Chip Set", file no. 4063.4, October 1996.

The PRISM 1 chip set provides all the functions necessary for full or half duplex, direct sequence spread spectrum, packet communications at the 2.4 to 2.5 GHz ISM radio band. In particular, the HSP3824 baseband processor manufactured by Harris Corporation employs quadrature or bi-phase phase shift keying (QPSK or BPSK) modulation schemes. While the PRISM 1 chip set is operable at 2 Mbits/s for BPSK and 4 Mbits/s for QPSK, these data rates may not be sufficient for higher data rate applications.

Spread spectrum communications have been used for various applications, such as cellular telephone communications, to provide robustness to jamming, good interference and multi-path rejection, and inherently secure communications from eavesdroppers, as described, for example, in U.S. Pat. No. 5,515,396 to Hakkinen. The patent discloses a code division multiple access (CDMA) cellular communication system using four Walsh spreading codes to allow transmission of a higher information rate without a substantial duplication of transmitter hardware. U.S. Pat. No. 5,535,239 to Padovani et al., U.S. Pat. No. 5,416,797 to Gilhousen et al., U.S. Pat. No. 5,309,474 to Gilhousen et al., and U.S. Pat. No. 5,103,459 to Gilhousen et al. also disclose a CDMA spread spectrum cellular telephone communications system using Walsh function spreading codes.

Unfortunately, the conventional Walsh function spreading codes may create undesirable signal components for some applications. Moreover, a WLAN application, for example, may require a change between BPSK and QPSK during operation, that is, on-the-fly. Spreading codes may be difficult to use in such an application where an on-the-fly change is required.

SUMMARY OF THE INVENTION

In view of the foregoing background, it is therefore an object of the present invention to provide a spread spectrum transceiver and associated method permitting operation at higher data rates than conventional transceivers.

It is another object of the invention to provide a spread spectrum transceiver and associated method to permit operation at higher data rates and which may switch on-the-fly between different data rates and/or formats.

These and other objects, features and advantages in accordance with the invention are provided by a spread spectrum radio transceiver comprising a high data rate baseband processor and a radio circuit connected thereto. The baseband processor preferably includes a modulator for spread spectrum phase shift keying (PSK) modulating information for transmission via the radio circuit, and wherein the modulator, in one embodiment, comprises at least one modified Walsh code function encoder for encoding information according to a modified Walsh code. The baseband processor also preferably further comprises a demodulator for spread spectrum PSK demodulating information received from the radio circuit. The demodulator is preferably connected to the output of at least one analog-to-digital (A/D) converter, which, in turn, is AC-coupled to the associated receive portions of the radio circuit. Accordingly, the demodulator preferably comprises at least one modified Walsh code function correlator for decoding information according to the modified Walsh code. The modified Walsh code substantially reduces an average DC component which in combination with the AC-coupling to the at least one A/D converter thereby increases overall system performance. Other orthogonal and bi-orthogonal coding schemes may also be used, wherein the average DC component is preferably substantially reduced or avoided.

The modulator preferably comprises means for operating in one of a bi-phase PSK (BPSK) modulation mode at a first data rate defining a first format, and a quadrature PSK (QPSK) mode at a second data rate defining a second format. In addition, the demodulator preferably comprises means for operating in one of the first and second formats. The modulator may also preferably include header modulator means for modulating data packets to include a header at a predetermined modulation and a third data rate defining a third format, and for modulating variable data at one of the first and second formats. Accordingly, the demodulator thus preferably includes header demodulator means for demodu-

lating data packets by demodulating the header at the third format and for switching to either the first and second formats of the variable data after the header. The third format is preferably differential BPSK, and the third data rate is preferably lower than the first and second data rates.

The demodulator may preferably comprise first and second carrier tracking loops—the first carrier tracking loop for the third format, and the second carrier tracking loop for the first and second formats. The second carrier tracking loop, in turn, may comprise a carrier numerically controlled oscillator (NCO), and NCO control means for selectively operating the carrier NCO based upon a carrier phase of the first carrier tracking loop to thereby facilitate switching to the format of the variable data. The second carrier tracking loop may also comprise a carrier loop filter, and carrier loop filter control means for selectively operating the carrier loop filter based upon a frequency of the first carrier tracking loop to facilitate switching to the format of the variable data. The carrier tracking loops permit switching to the desired format after the header and on-the-fly.

The at least one modified Walsh code function correlator of the demodulator preferably comprises a modified Walsh function generator, and a plurality of parallel connected correlators connected to the modified Walsh function generator. The modified Walsh code may be a Walsh code modified by a modulo two addition of a fixed hexadecimal code thereto. In addition, the modulator in one embodiment preferably further comprises means for partitioning data into four bit nibbles of sign (one bit) and magnitude (three bits) to the modified Walsh code function encoder.

The modulator may also include spreading means for spreading each data bit using a pseudorandom (PN) sequence at a predetermined chip rate. Accordingly, the modulator may also comprise preamble modulating means for generating a preamble, and wherein the demodulator includes preamble demodulator means for demodulating the preamble for achieving initial PN sequence synchronization.

The modulator for the spread spectrum transceiver may include a scrambler, and the demodulator accordingly preferably includes a descrambler. The demodulator may also include clear channel assessing means for generating a clear channel assessment signal to facilitate communications only when the channel is clear.

The baseband processor is desirably coupled to a radio circuit for the complete spread spectrum transceiver. Accordingly, the transceiver preferably includes a quadrature intermediate frequency modulator/demodulator connected to the baseband processor, and an up/down frequency converter connected to the quadrature intermediate frequency modulator/demodulator. In addition, the radio circuit preferably further comprises a low noise amplifier having an output connected to an input of the up/down converter, and a radio frequency power amplifier having an input connected to an output of the up/down converter. The spread spectrum radio transceiver preferably also includes an antenna, and an antenna switch for switching the antenna between the output of the radio frequency power amplifier and the input of the low noise amplifier.

A method aspect of the invention is for baseband processing for spread spectrum radio communication. The method preferably comprises the steps of: spread spectrum phase shift keying (PSK) modulating information for transmission by encoding information according to a predetermined bi-orthogonal code for reducing an average DC signal component; and spread spectrum PSK demodulating received information by decoding information according to the predetermined bi-orthogonal code. The predetermined bi-orthogonal code is preferably a modified Walsh function code.

BRIEF DESCRIPTION OF THE DRAWINGS

FIG. 1 is a schematic circuit diagram of a transceiver in accordance with the present invention.

FIG. 2 is a schematic circuit diagram of a modulator portion of the high data rate baseband processor in accordance with the present invention.

FIG. 3 is a timing diagram of signals generated by the present invention.

FIG. 4 is a timing diagram of additional signals generated by the present invention.

FIG. 5 is a schematic circuit diagram of a demodulator portion of the high data rate baseband processor in accordance with the present invention.

FIG. 6 is a schematic circuit diagram of the correlator portion of the demodulator of the high data rate baseband processor in accordance with the present invention.

FIG. 7 is a schematic circuit diagram of additional portions of the demodulator of the high data rate baseband processor in accordance with the present invention.

FIG. 8 is a schematic circuit diagram of further portions of the demodulator of the high data rate baseband processor in accordance with the present invention.

DETAILED DESCRIPTION OF THE PREFERRED EMBODIMENTS

The present invention will now be described more fully hereinafter with reference to the accompanying drawings, in which preferred embodiments of the invention are shown. This invention may, however, be embodied in many different forms and should not be construed as limited to the embodiments set forth herein. Rather, these embodiments are provided so that this disclosure will be thorough and complete, and will fully convey the scope of the invention to those skilled in the art. Like numbers refer to like elements throughout.

Referring to FIG. 1, a wireless transceiver **30** in accordance with the invention is first described. The transceiver **30** may be readily used for WLAN applications in the 2.4 GHz ISM band in accordance with the proposed IEEE 802.11 standard. Those of skill in the art will readily recognize other applications for the transceiver **30** as well. The transceiver **30** includes the selectable antennas **31** coupled to the radio power amplifier and TX/RX switch **32** as may be provided by a Harris part number HFA3925. As would be readily understood by those skilled in the art, multiple antennas may be provided for space diversity reception.

A low noise amplifier **38**, as may be provided by Harris part number HFA3424, is also operatively connected to the antennas. The illustrated up/down converter **33** is connected to both the low noise amplifier **38** and the RF power amplifier and TX/RX switch **32** as would be readily understood by those skilled in the art. The up/down converter **33** may be provided by a Harris part number HFA3628, for example. The up/down converter **33**, in turn, is connected to the illustrated dual frequency synthesizer **34** and the quad IF modulator/demodulator **35**. The dual synthesizer **34** may be a Harris part number HFA3824 and the quad IF modulator **35** may be a Harris part number HFA3724. All the components described so far are included in a 2.4 GHz direct sequence spread spectrum wireless transceiver chip set

manufactured by Harris Corporation under the designation PRISM 1. Various filters **36**, and the illustrated voltage controlled oscillators **37** may also be provided as would be readily understood by those skilled in the art and as further described in the Harris PRISM 1 chip set literature, such as the application note No. AN9614, March 1996, the entire disclosure of which is incorporated herein by reference.

Turning now more particularly to the right hand side of FIG. **1**, the high data rate direct sequence spread spectrum (DSS) baseband processor **40** in accordance with the present invention is now described. The conventional Harris PRISM 1 chip set includes a low data rate DSS baseband processor available under the designation HSP3824. This prior baseband processor is described in detail in a publication entitled "Direct Sequence Spread Spectrum Baseband Processor, March 1996, file number 4064.4, and the entire disclosure of which is incorporated herein by reference.

Like the HSP3824 baseband processor, the high data rate baseband processor **40** of the invention contains all of the functions necessary for a full or half duplex packet baseband transceiver. The processor **40** has on-board dual 8-bit A/D converters **41** for receiving the receive I and Q signals from the quad IF modulator **38**. Also like the HSP3824, the high data rate processor **40** includes a receive signal strength indicator (RSSI) monitoring function with the on-board 6-bit A/D converter and CCA circuit block **44** provides a clear channel assessment (CCA) to avoid data collisions and optimize network throughput as would be readily understood by those skilled in the art.

The present invention provides an extension of the PRISM 1 product from 1 Mbit/s BPSK and 2 Mbit/s QPSK to 5.5 Mbit/s BPSK and 11 Mbit/s QPSK. This is accomplished by keeping the chip rate constant at 11 Mchips/s. This allows the same RF circuits to be used for higher data rates. The symbol rate of the high rate mode is 11 MHz/8=1.375 Msymbol/s.

For the 5.5 Mbit/s mode of the present invention, the bits are scrambled and then encoded from 4 bit nibbles to 8 chip modified Walsh functions. This mapping results in bi-orthogonal codes which have a better bit error rate (BER) performance than BPSK alone. The resulting 11 Mchip/s data stream is BPSK modulated. The demodulator comprises a modified Walsh correlator and associated chip tracking, carrier tracking, and reformatting devices as described in greater detail below.

For the 11 Mbit/s mode, the bits are scrambled and then encoded from 4 bit nibbles to 8 chip modified Walsh functions independently on each I and Q rail. There are 8 information bits per symbol mapped to 2 modified Walsh functions. This mapping results in bi-orthogonal codes which have better BER performance than QPSK alone. The resulting two 11 Mchip/s data streams are QPSK modulated.

The theoretical BER performance of this type of modulation is approximately 10^{-7} at an E_b/N_0 of 8 dB versus 9.6 dB for plain BPSK or QPSK. This coding gain is due to the bi-orthogonal coding. There is bandwidth expansion for all of the modulations to help combat multi-path and reduce the effects of interference.

Referring additionally to FIG. **2**, the output of the QPSK/BPSK modulator and scrambler circuit **51** is partitioned into nibbles of Sign-Magnitude of 4 bits, with the least significant bit (LSB) first. For QPSK, 2 nibbles are presented in parallel to the Modified Walsh Generators **53a**, **53b**—the first nibble from the B serial-in/parallel-out SIPO circuit block **52b** and the second from A SIPO **52a**. The two nibbles form a symbol of data. The bit rate may be 11 Mbit/s as illustrated. Therefore, the symbol rate is 1.375 Mbit/s (11/8=1.375). For BPSK, nibbles are presented from the A SIPO **52a** only. The B SIPO **52b** is disabled. A nibble forms a symbol of data. The bit rate in this instance is 5.5 Mbit/s and the symbol rate remains 1.375 Mbit/s (5.5/4=1.375).

The Magnitude part of the SIPO output points to one of the Modified Walsh Sequences shown in the table below, along with the basic Walsh sequences for comparison.

MAG	BASIC WALSH	MODIFIED WALSH
0	00	05
1	0F	0C
2	33	30
3	3C	3F
4	55	56
5	5A	59
6	66	63
7	69	6A

The Sel Walsh A_0 and Sel Walsh B bits from the clock enable logic circuit **54** multiplex the selected Walsh sequence to the output, and wherein the LSBs are output first. The A Sign and B Sign bits bypass the respective Modified Walsh Generators **53a**, **53b** and are XOR'd to the sequence.

As would be readily understood by those skilled in the art, there are other possible mappings of bits to Walsh symbols that are unintempated by the present invention. In addition, the Modified Walsh code may be generated by module two adding a fixed hexadecimal code to the basic or standard Walsh codes to thereby reduce the average DC signal component and thereby enhance overall performance as will be explained in greater detail below.

The output of the Diff encoders of the last symbol of the header CRC is the reference for the high rate data. The header may always be BPSK. This reference is XOR'd to I and Q signals before the output. This allows the demodulator **60**, as described in greater detail below, to compensate for phase ambiguity without Diff decoding the high rate data. Data flip flops **55a**, **55b** are connected to the multiplexer, although in other embodiments the flip flops may be positioned further downstream as would be readily understood by those skilled in the art. The output chip rate is 11 Mchip/s. For BPSK, the same chip sequence is output on each I and Q rail via the multiplexer **57**. The output multiplexer **58** provides the selection of the appropriate data rate and format.

Referring now additionally to FIG. **3**, the timing and signal format for the interface **80** is described in greater detail. Referring to the left hand portion, Sync is all 1's, and SFD is F3A0h for the PLCP preamble **90**. Now relating to the PLCP header **91**, the SIGNAL is:

0Ah	1 Mbit/s BPSK,
14h	2 Mbit/s QPSK,
37h	5.5 Mbit/s BPSK, and
6Eh	11 Mbit/s QPSK.

The SERVICE is 00h, the LENGTH is XXXXh wherein the length is in μs, and the CRC is XXXXh calculated based on SIGNAL, SERVICE and LENGTH. MPDU is variable with a number of octets (bytes).

The PLCP preamble and PLCP header are always at 1 Mbit/s, Diff encoded, scrambled and spread with an 11 chip barker. SYNC and SFD are internally generated. SIGNAL, SERVICE and LENGTH fields are provided by the interface

80 via a control port. SIGNAL is indicated by 2 control bits and then formatted as described. The interface 80 provides the LENGTH in μs. CRC in PLCP header is performed on SIGNAL, SERVICE and LENGTH fields.

MPDU is serially provided by Interface 80 and is the variable data scrambled for normal operation. The reference phase for the first symbol of the MPDU is the output phase of the last symbol of the header for Diff Encoding. The last symbol of the header into the scrambler 51 must be followed by the first bit of the MPDU. The variable data may be modulated and demodulated in different formats than the header portion to thereby increase the data rate, and while a switchover as indicated by the switchover point in FIG. 3, occurs on-the-fly.

Turning now additionally to FIG. 4, the timing of the high data rate modulator 50 may be further understood. With the illustrated timing, the delay from TX_RDY to the first Hi Rate Output Chip is ten 11 MHz clock periods or 909.1 ns. The other illustrated quantities will be readily appreciated in view of the above description.

Referring now to FIG. 5, the high data rate demodulator 60 in accordance with the invention is further described. The high rate circuits are activated after the signal field indicates 5.5 or 11 Mbit/s operation. At a certain time, the start phase is jammed into the Carrier NCO 61 and the start frequency offset is jammed into the Carrier Loop Filter 62. The signal is frequency translated by the C/S ROM 63 and the Complex Multiplier 64 and passed to the Walsh Correlator 65. The correlator 65 output drives the Symbol Decision circuits 66, as illustrated. The output of the Symbol Decision circuits 66 are serially shifted by the parallel-in/serial-out MPD block 67 to the descrambler portion of the PSK Demodulator and Scrambler circuit 70 after passing through the Sign Correction circuit 68 based on the last symbol of the header. The timing of the switch over desirably makes the symbol decisions ready at the correct time.

The signal is phase and frequency tracked via the Complex Multiplier 64, Carrier NCO 61 and Carrier Loop Filter 62. The output of the Complex Multiplier 64 also feeds the Carrier Phase Error Detector 76. A decision directed Chip Phase Error Detector 72 feeds the illustrated Timing Loop Filter 75 which, in turn, is connected to the Clock Enable Logic 77. A decision from the Chip Phase Error Detector 72 is used instead of early-late correlations for chip tracking since the SNR is high. This greatly reduces the additional circuitry required for high rate operation. The 44 MHz master clock input to the Clock Control 74 will allow tracking high rate mode chips with a ⅛ chip steps. Only the stepper is required to run at 44 MHz, while most of the remaining circuits run at 11 MHz. The circuit is only required to operate with a long header and sync.

Turning now additionally to FIG. 6, a pair of Walsh Correlators 65a, 65b is further described. The I_END and Q_END inputs from the chip tracking loop are input at 11 MHz. The Modified Walsh Generator 81 produces the 8 Walsh codes (W0 to W7) serially to sixteen parallel correlators (8 for I_END and 8 for Q_END). The sixteen correlations are available at a 1.375 MHz rate. The Walsh Codes (W0 to W7) are the same as listed in the table above for the high data rate modulator. For the 11 Mbit/s mode, the largest magnitude of I W0 to I W7 is selected by the Pick Largest Magnitude circuit 81a to form 1 sym. 1 sym is formatted in Sign-Magnitude. The Magnitude is the Modified Walsh Index (0 to 7) of the largest Correlation and Sign is the sign bit of the input of the winning Correlation. The Q channel is processed in parallel in the same manner. For the 5.5 Mbit/s mode, the largest magnitude of I W0 to I W7 is selected to form 4sym. In this case, only 1 sym is output. AccEn controls the correlator timing and is supplied by timing and control circuits.

With additional reference to FIG. 7, the carrier tracking loop 90 is now described. In the described embodiment, the number of bits are worst case for estimation purposes. While 3 bits are used for the A/D conversion, a higher number may be desired in other embodiments as would be readily appreciated by those skilled in the art. The Phase BIAS circuit 91 compensates for constellation rotation, that is, BPSK or QPSK. FSCALE compensates for the NCO clock frequency. PHASE SCALE compensates for a phase shift due to frequency offset over the time difference of the first and second loops. The Lead and Lag Shifters 92, 93 form the loop multiplier for the second order carrier tracking loop filter 62.

Referring now additionally to FIG. 8, the Chip Tracking Loop 110 is further described. All circuits except Chip Advance/Retard 111 use the 22 MHz clock signal. The Chip Advance/Retard circuit 111 may be made to integrate with the existing clock of the prior art PRISM 1 circuit. PRISM 1 steps in ⅛ chips. The PRISM 1 timing may be changed to switchover this circuit for high data rate operation. The A/D clock switches without a phase shift. I_ROT and Q_ROT are from the Complex Multiplier 64 at 22 MHz. They are sampled by the illustrated Registers 112 to produce I_End and Q_End at 11 MHz, which are routed to the Correlators 65 (FIG. 6). The alternate samples I_Mid and Q_Mid are used to measure the chip phase error. For QPSK, errors are generated from both rails, and for BPSK, the error is only generated from the I rail. QPSK Enable disables the Q rail phase error for BPSK operation.

The sign of the accumulator is used to advance or retard the chip timing by ⅛ chip. This circuit must be enabled by the PRISM 1 circuits at the proper time via the HI_START signal. The errors are summed and accumulated for 32 symbols (256 chips). The Chip Track Acc signal then dumps the accumulator for the next measurement. The chip phase error is generated if the End Sign bits bracketing the Mid sample are different. This is accomplished using the transition detectors. The sign of the chip phase error is determined by the sign of the End sample after the Mid sample. A multiplier 114 is shown for multiplying by +1 if the End Sign is 0 or by −1 if the End Sign is 1. If the End sign bits are identical, the chip phase error for that rail is 0. The AND function is only enabled by transitions.

Many modifications and other embodiments of the invention will come to the mind of one skilled in the art having the benefit of the teachings presented in the foregoing descriptions and the associated drawings. Therefore, it is to be understood that the invention is not to be limited to the specific embodiments disclosed, and that modifications and embodiments are intended to be included within the scope of the appended claims.

That which is claimed is:

1. A spread spectrum radio transceiver comprising:

a baseband processor and a radio circuit connected thereto, said baseband processor comprising

a demodulator for spread spectrum phase shift keying (PSK) demodulating information received from said radio circuit,

at least one analog-to-digital (A/D) converter having an output connected to said demodulator and an input AC-coupled to said radio circuit,

said demodulator comprising at least one modified Walsh code function correlator for decoding information according to a modified Walsh code reducing

an average DC signal component which in combination with the AC coupling to said at least one A/D converter enhances overall performance; and

a modulator for spread spectrum PSK modulating information for transmission via the radio circuit, said modulator comprising at least one modified Walsh code function encoder for encoding information according to the modified Walsh code.

2. A spread spectrum radio transceiver according to claim 1 wherein said modulator comprises means for operating in one of first format defined by bi-phase PSK (BPSK) modulation at a first data rate and a second format defined by quadrature PSK (QPSK) modulation at a second data rate; and wherein said demodulator comprises means for operating in one of the first and second formats.

3. A spread spectrum radio transceiver according to claim 2 wherein said modulator comprises header modulator means for modulating data packets to include a header at a third format defined by a predetermined modulation at a third data rate and variable data in one of the first and second formats; and wherein said demodulator comprises header demodulator means for demodulating data packets by demodulating the header at the third format and for switching to the respective one of the first and second formats of the variable data after the header.

4. A spread spectrum radio transceiver according to claim 3 wherein the predetermined modulation of the third format is differential BPSK (DBPSK), and wherein the third data rate is lower than the first and second data rates.

5. A spread spectrum radio transceiver according to claim 3 wherein said demodulator further comprises:

a first carrier tracking loop for the third format; and

a second carrier tracking loop for the first and second formats.

6. A spread spectrum radio transceiver according to claim 5 wherein said second carrier tracking loop comprises:

a carrier numerically controlled oscillator (NCO); and

carrier NCO control means for selectively operating said carrier NCO based upon a carrier phase of said first carrier tracking loop to thereby facilitate switching to the format of the variable data.

7. A spread spectrum radio transceiver according to claim 5 wherein said second carrier tracking loop comprises:

a carrier loop filter; and

carrier loop filter control means for selectively operating said carrier loop filter based upon a frequency of said first carrier tracking loop to thereby facilitate switching to the format of the variable data.

8. A spread spectrum radio transceiver according to claim 1 wherein said modulator further comprises means for partitioning data into four bit nibbles of sign (one bit) and magnitude (three bits) to said at least one modified Walsh code function encoder.

9. A spread spectrum radio transceiver according to claim 1 wherein the modified Walsh code is a Walsh code modified by a modulo two addition of a fixed hexadecimal code thereto.

10. A spread spectrum radio transceiver according to claim 1 wherein said at least one modified Walsh code function correlator comprises:

a modified Walsh function generator; and

a plurality of parallel connected correlators connected to said modified Walsh function generator.

11. A spread spectrum radio transceiver according to claim 1 wherein said modulator comprises spreading means for spreading each data bit using a pseudorandom (PN) sequence at a predetermined chip rate and preamble modulating means for generating a preamble; and wherein said demodulator comprises preamble demodulator means for demodulating the preamble for achieving initial PN sequence synchronization.

12. A spread spectrum radio transceiver according to claim 1 wherein said modulator comprises a scrambler; and wherein said demodulator comprises a descrambler.

13. A spread spectrum radio transceiver according to claim 1 wherein said demodulator comprises clear channel assessing means for generating a clear channel assessment signal.

14. A spread spectrum radio transceiver according to claim 1 wherein said radio circuit comprises:

a quadrature intermediate frequency modulator/demodulator connected to said baseband processor; and

an up/down frequency converter connected to said quadrature intermediate frequency modulator/demodulator.

15. A spread spectrum radio transceiver according to claim 14 wherein said radio circuit further comprises:

a low noise amplifier having an output connected to an input of said up/down converter; and

a radio frequency power amplifier having an input connected to an output of said up/down converter.

16. A spread spectrum radio transceiver according to claim 15 further comprising:

an antenna; and

an antenna switch for switching said antenna between the output of said radio frequency power amplifier and the input of said low noise amplifier.

17. A baseband processor for a spread spectrum radio transceiver, said baseband processor comprising:

a demodulator for spread spectrum phase shift keying (PSK) demodulating;

at least one analog-to-digital (A/D) converter having an output connected to said demodulator and an input AC coupled to receive information;

said demodulator comprising at least one predetermined orthogonal code function correlator for decoding information according to a predetermined orthogonal code reducing an average DC signal component to thereby increase AC coupling to said at least one A/D converter; and

a modulator for spread spectrum PSK modulating information for transmission, said modulator comprising at least one predetermined orthogonal code function encoder for encoding information according to the predetermined orthogonal code.

18. A baseband processor according to claim 17 wherein said modulator comprises means for operating in one of first format defined by bi-phase PSK (BPSK) modulation at a first data rate and a second format defined by quadrature PSK (QPSK) modulation at a second data rate; and wherein said demodulator comprises means for operating in one of the first and second formats.

19. A baseband processor according to claim 18 wherein said modulator comprises header modulator means for modulating data packets to include a header at a third format defined by a predetermined modulation at a third data rate and variable data in one of the first and second formats; and wherein said demodulator comprises header demodulator means for demodulating data packets by demodulating the header at the third format and for switching to the respective one of the first and second formats of the variable data after the header.

20. A baseband processor according to claim 19 wherein the predetermined modulation of the third format is differential BPSK (DBPSK), and wherein the third data rate is lower than the first and second data rates.

21. A baseband processor according to claim 19 wherein said demodulator further comprises:

a first carrier tracking loop for the third format; and

a second carrier tracking loop for the first and second formats.

22. A baseband processor according to claim 21 wherein said second carrier tracking loop comprises:

a carrier numerically controlled oscillator (NCO); and

carrier NCO control means for selectively operating said carrier NCO based upon a carrier phase of said first carrier tracking loop to thereby facilitate switching to the format of the variable data.

23. A baseband processor according to claim 21 wherein said second carrier tracking loop comprises:

a carrier loop filter; and

carrier loop filter control means for selectively operating said carrier loop filter based upon a frequency of said first carrier tracking loop to thereby facilitate switching to the format of the variable data.

24. A baseband processor according to claim 17 wherein said modulator further comprises means for partitioning data into four bit nibbles of sign (one bit) and magnitude (three bits) to said at least one predetermined orthogonal code function encoder.

25. A baseband processor according to claim 17 wherein the predetermined orthogonal code is a Walsh code modified by a modulo two addition of a fixed hexadecimal code thereto.

26. A baseband processor according to claim 17 wherein the predetermined orthogonal code is a bi-orthogonal code.

27. A baseband processor according to claim 17 wherein said at least one predetermined orthogonal code function correlator comprises:

a predetermined orthogonal code function generator; and

a plurality of parallel connected correlators connected to said predetermined orthogonal code function generator.

28. A baseband processor according to claim 17 wherein said modulator comprises spreading means for spreading each data bit using a pseudorandom (PN) sequence at a predetermined chip rate and preamble modulating means for generating a preamble; and wherein said demodulator comprises preamble demodulator means for demodulating the preamble for achieving initial PN sequence synchronization.

29. A baseband processor according to claim 17 wherein said modulator comprises a scrambler; and wherein said demodulator comprises a descrambler.

30. A baseband processor for a spread spectrum radio transceiver, said baseband processor comprising:

a modulator for spread spectrum phase shift keying (PSK) modulating information for transmission, said modulator comprising:

at least one encoder for encoding information for transmission,

means for operating in one of a first format defined by bi-phase PSK (BPSK) modulation at a first data rate and a second format defined by quadrature PSK (QPSK) modulation at a second data rate,

header modulator means for modulating data packets to include a header at a third format defined by a predetermined modulation at a third data rate and variable data in one of the first and second formats; and

a demodulator for spread spectrum PSK demodulating received information, said demodulator comprising:

at least one correlator for decoding received information,

means for operating in one of the first and second formats,

header demodulator means for demodulating data packets by demodulating the header at the third format and for switching to the respective one of the first and second formats of the variable data after the header,

a first carrier tracking loop for the third format, and

a second carrier tracking loop for the first and second formats.

31. A baseband processor according to claim 30 wherein the predetermined modulation of the third format is differential BPSK (DBPSK), and wherein the third data rate is lower than the first and second data rates.

32. A baseband processor according to claim 30 wherein said second carrier tracking loop comprises:

a carrier numerically controlled oscillator (NCO); and

carrier NCO control means for selectively operating said carrier NCO based upon a carrier phase of said first carrier tracking loop to thereby facilitate switching to the format of the variable data.

33. A baseband processor according to claim 30 wherein said second carrier tracking loop comprises:

a carrier loop filter; and

carrier loop filter control means for selectively operating said carrier loop filter based upon a frequency of said first carrier tracking loop to thereby facilitate switching to the format of the variable data.

34. A baseband processor according to claim 30 wherein said modulator comprises spreading means for spreading each data bit using a pseudorandom (PN) sequence at a predetermined chip rate and preamble modulating means for generating a preamble; and wherein said demodulator comprises preamble demodulator means for demodulating the preamble for achieving initial PN sequence synchronization.

35. A baseband processor according to claim 30 wherein said modulator comprises a scrambler; and wherein said demodulator comprises a descrambler.

36. A modulator for a spread spectrum radio transceiver, said modulator comprising:

modulator means for spread spectrum phase shift keying (PSK) modulating information for transmission, said modulator means comprising at least one predetermined orthogonal code function encoder for encoding information according to a predetermined orthogonal code for reducing an average DC signal component.

37. A modulator according to claim 36 wherein said modulator means comprises means for operating in one of first format defined by bi-phase PSK (BPSK) modulation at a first data rate and a second format defined by quadrature PSK (QPSK) modulation at a second data rate.

38. A modulator according to claim 37 wherein said modulator means comprises header modulator means for modulating data packets to include a header at a third format defined by a predetermined modulation at a third data rate and variable data in one of the first and second formats.

39. A modulator according to claim 38 wherein the predetermined modulation of the third format is differential BPSK (DBPSK), and wherein the third data rate is lower than the first and second data rates.

40. A modulator according to claim 36 wherein said modulator means further comprises means for partitioning

data into four bit nibbles of sign (one bit) and magnitude (three bits) to said at least one predetermined orthogonal code function encoder, and wherein the predetermined orthogonal code is a Walsh code modified by a modulo two addition of a fixed hexadecimal code thereto.

41. A modulator according to claim **36** wherein said at least one predetermined orthogonal code function correlator comprises:

a predetermined orthogonal code function generator; and

a plurality of parallel connected correlators connected to said predetermined orthogonal code function generator.

42. A modulator according to claim **36** wherein the predetermined orthogonal code is a Walsh code modified by a modulo two addition of a fixed hexadecimal code thereto.

43. A modulator according to claim **36** wherein the predetermined orthogonal code is a bi-orthogonal code.

44. A demodulator for a spread spectrum radio transceiver, said demodulator comprising:

demodulator means for spread spectrum phase shift keying (PSK) demodulating information received from said radio circuit, said demodulator means comprising at least one predetermined orthogonal code function correlator for decoding information according to a predetermined orthogonal code reducing an average DC signal component.

45. A demodulator according to claim **44** wherein said demodulator means comprises means for operating in one of first format defined by bi-phase PSK (BPSK) modulation at a first data rate and a second format defined by quadrature PSK (QPSK) modulation at a second data rate.

46. A demodulator according to claim **45** wherein said demodulator means comprises header demodulator means for demodulating data packets including a header in a third format defined by a predetermined modulation at a third data rate and variable data in one of the first and second formats, and for switching to the respective one of the first and second formats of the variable data after the header.

47. A demodulator according to claim **46** wherein the predetermined modulation of the third format is differential BPSK (DBPSK), and wherein the third data rate is lower than the first and second data rates.

48. A demodulator according to claim **46** wherein said demodulator means further comprises:

a first carrier tracking loop for the third format; and

a second carrier tracking loop for the first and second formats.

49. A demodulator according to claim **48** wherein said second carrier tracking loop comprises:

a carrier numerically controlled oscillator (NCO); and

carrier NCO control means for selectively operating said carrier NCO based upon a carrier phase of said first carrier tracking loop to thereby facilitate switching to the format of the variable data.

50. A demodulator according to claim **48** wherein said second carrier tracking loop comprises:

a carrier loop filter; and

carrier loop filter control means for selectively operating said carrier loop filter based upon a frequency of said first carrier tracking loop to thereby facilitate switching to the format of the variable data.

51. A demodulator according to claim **44** further comprising means for partitioning data into four bit nibbles of sign (one bit) and magnitude (three bits).

52. A demodulator according to claim **44** wherein the predetermined orthogonal code is a Walsh code modified by a modulo two addition of a fixed hexadecimal code thereto.

53. A demodulator according to claim **44** wherein the predetermined orthogonal code is a bi-orthogonal code.

54. A demodulator according to claim **44** wherein said at least one predetermined orthogonal code function correlator comprises:

a predetermined orthogonal code function generator; and

a plurality of parallel connected correlators connected to said predetermined orthogonal code function generator.

55. A method for baseband processor for spread spectrum radio communication, the method comprising the steps of:

spread spectrum phase shift keying (PSK) modulating information for transmission while encoding the information according to the predetermined orthogonal code for reducing an average DC signal component; and

spread spectrum PSK demodulating received information by decoding the received information according to the predetermined orthogonal code.

56. A method according to claim **55** further comprising the step of AC-coupling received information for spread spectrum PSK demodulating so that the reduced average DC signal component in combination with the AC-coupling enhances overall performance.

57. A method according to claim **55** further comprising the steps of modulating and demodulating in one of first format defined by bi-phase PSK (BPSK) modulation at a first data rate and a second format defined by quadrature PSK (QPSK) modulation at a second data rate.

58. A method according to claim **57** further comprising the steps of:

modulating data packets to include a header at a third format defined by a predetermined modulation at a third data rate and variable data in one of the first and second formats; and

demodulating data packets by demodulating the header at the third format and for switching to the respective one of the first and second formats of the variable data after the header.

59. A method according to claim **58** wherein the predetermined modulation of the third format is differential BPSK (DBPSK), and wherein the third data rate is lower than the first and second data rates.

60. A method according to claim **55** wherein the predetermined orthogonal code is a Walsh code modified by a modulo two addition of a fixed hexadecimal code thereto.

61. A method according to claim **55** wherein the predetermined orthogonal code is a bi-orthogonal code.

* * * * *

PATENT APPLICATION SERIAL NO. 08/819846

U.S. DEPARTMENT OF COMMERCE
PATENT AND TRADEMARK OFFICE
FEE RECORD SHEET

PTO-1556
(5/87)

BEST COPY

08/819846

MAIL ROOM MAR 17 1997

Case Docket No. SE-1301-NR/H6388 (16328)

ALLEN, DYER, DOPPELT, MILBRATH & GILCHRIST, P.A.
Post Office Box 3791
Orlando, Florida 32802-3791

CERTIFICATE OF MAILING BY "EXPRESS MAIL"

"EXPRESS MAIL" MAILING LABEL NUMBER EM524677441US

DATE OF DEPOSIT MARCH 17, 1997

I HEREBY CERTIFY THAT THIS PAPER OR FEE IS BEING DEPOSITED WITH THE UNITED STATES POSTAL SERVICE "EXPRESS MAIL POST OFFICE TO ADDRESSEE" SERVICE UNDER 37 CFR 1.10 ON THE DATE INDICATED ABOVE AND IS ADDRESSED TO THE COMMISSIONER OF PATENTS AND TRADEMARKS, WASHINGTON, D.C. 20231

BARBARA GORES
(TYPED OR PRINTED NAME OF PERSON MAILING PAPER OR FEE)

Barbara Gores
(SIGNATURE OF PERSON MAILING PAPER OR FEE)

TO: The Commissioner of Patents and Trademarks
Washington, D.C. 20231

Sir:

Transmitted herewith for filing is the patent application of:

Inventor: James Leroy Snell

For: HIGH DATA RATE SPREAD SPECTRUM TRANSCEIVER AND ASSOCIATED METHODS

Enclosed are:

(X) Patent Application: 32 pages, 61 claims.

(X) 8 Sheets of informal drawings.

( ) A certified copy of a _____ application.

(X) Citation Under 37 CFR 1.97 and PTO-1449

( ) A verified statement to establish small entity status under 37 CFR 1.19 and 1.27.

(X) Declaration and Filing Fee NOT ENCLOSED.

(X) Name, Address and Citizenship of Inventor(s) is as follows:

Mr. James Leroy Snell, 2695 Lemon Street NE, Palm Bay, FL 32905
Citizen of United States

PLEASE ADDRESS ALL CORRESPONDENCE TO ATTORNEY OF RECORD

Date: March 17, 1997

Christopher F. Regan
Reg. No. 34,906
Allen, Dyer, Doppelt, Milbrath & Gilchrist
255 S. Orange Avenue, Suite 1401
P.O. Box 3791
Orlando, Florida 32802-3791
Phone: (407) 841-2330

08819846 .031797

MAIL ROOM MAR 17 1997 PHILADELPHIA, PA.

A/NO Fee

08/819846

HIGH DATA RATE SPREAD SPECTRUM TRANSCEIVER AND ASSOCIATED METHODS

Field of the Invention

The invention relates to the field of communication electronics, and, more particularly, to a spread spectrum transceiver and associated methods.

Background of the Invention

Wireless or radio communication between separated electronic devices is widely used. For example, a wireless local area network (WLAN) is a flexible data communication system that may be an extension to, or an alternative for, a wired LAN within a building or campus. A WLAN uses radio technology to transmit and receive data over the air, thereby reducing or minimizing the need for wired connections. Accordingly, a WLAN combines data connectivity with user mobility, and, through simplified configurations, also permits a movable LAN.

Over the past several years, WLANs have gained acceptance among a number users including, for example, health-care, retail, manufacturing, warehousing, and academic areas. These groups have benefited from the productivity gains of using hand-held terminals and notebook computers, for example, to transmit real-time information to centralized hosts for processing. Today WLANs are becoming more widely recognized and used as a general

2

purpose connectivity alternative for an even broader range of users. In addition, a WLAN provides installation flexibility and permits a computer network to be used in situations where wireline technology is not practical.

In a typical WLAN, an access point provided by a transceiver, that is, a combination transmitter and receiver, connects to the wired network from a fixed location. Accordingly, the access transceiver receives, buffers, and transmits data between the WLAN and the wired network. A single access transceiver can support a small group of collocated users within a range of less than about one hundred to several hundred feet. The end users connect to the WLAN through transceivers which are typically implemented as PC cards in a notebook computer, or ISA or PCI cards for desktop computers. Of course the transceiver may be integrated with any device, such as a hand-held computer.

The assignee of the present invention has developed and manufactured a set of integrated circuits for a WLAN under the mark PRISM 1 which is compatible with the proposed IEEE 802.11 standard. The PRISM 1 chip set is further described in Harris Corporation Application Note entitled "Harris PRISM Chip Set", No. AN9614, March 1996; and also in a publication entitled "PRISM 2.4 GHz Chip Set", file no. 4063.4, October 1996.

The PRISM 1 chip set provides all the functions necessary for full or half duplex, direct sequence spread spectrum, packet communications at the 2.4 to 2.5 GHz ISM radio band. In particular, the HSP3824 baseband processor manufactured by Harris Corporation employs quadrature or bi-phase phase shift keying (QPSK or BPSK) modulation schemes. While the PRISM 1 chip set is operable at 2 Mbit/s for BPSK and 4

3

Mbit/s for QPSK, these data rates may not be sufficient for higher data rate applications.

Spread spectrum communications have been used for various applications, such as cellular telephone communications, to provide robustness to jamming, good interference and multi-path rejection, and inherently secure communications from eavesdroppers, as described, for example, in U.S. Patent No. 5,515,396 to Dalekotzin. The patent discloses a code division multiple access (CDMA) cellular communication system using four Walsh spreading codes to allow transmission of a higher information rate without a substantial duplication of transmitter hardware. U.S. Patent No. 5,535,239 to Padovani et al., U.S. Patent No. 5,416,797 to Gilhousen et al., U.S. Patent No. 5,309,474 to Gilhousen et al., and U.S. Patent No. 5,103,459 to Gilhousen et al. also disclose a CDMA spread spectrum cellular telephone communications system using Walsh function spreading codes.

Unfortunately, the conventional Walsh function spreading codes may create undesirable signal components for some applications. Moreover, a WLAN application, for example, may require a change between BPSK and QPSK during operation, that is, on-the-fly. Spreading codes may be difficult to use in such an application where an on-the-fly change is required.

Summary of the Invention

In view of the foregoing background, it is therefore an object of the present invention to provide a spread spectrum transceiver and associated method permitting operation at higher data rates than conventional transceivers.

It is another object of the invention to provide a spread spectrum transceiver and associated method to permit operation at higher data rates and

4

which may switch on-the-fly between different data rates and/or formats.

These and other objects, features and advantages in accordance with the invention are provided by a spread spectrum radio transceiver comprising a high data rate baseband processor and a radio circuit connected thereto. The baseband processor preferably includes a modulator for spread spectrum phase shift keying (PSK) modulating information for transmission via the radio circuit, and wherein the modulator, in one embodiment, comprises at least one modified Walsh code function encoder for encoding information according to a modified Walsh code. The baseband processor also preferably further comprises a demodulator for spread spectrum PSK demodulating information received from the radio circuit. The demodulator is preferably connected to the output of at least one analog-to-digital (A/D) converter, which, in turn, is AC-coupled to the associated receive portions of the radio circuit. Accordingly, the demodulator preferably comprises at least one modified Walsh code function correlator for decoding information according to the modified Walsh code. The modified Walsh code substantially reduces an average DC component which in combination with the AC-coupling to the at least one A/D converter thereby increases overall system performance. Other orthogonal and bi-orthogonal coding schemes may also be used, wherein the average DC component is preferably substantially reduced or avoided.

The modulator preferably comprises means for operating in one of a bi-phase PSK (BPSK) modulation mode at a first data rate defining a first format, and a quadrature PSK (QPSK) mode at a second data rate defining a second format. In addition, the demodulator preferably comprises means for operating in one of the first and second formats. The modulator may also

5

preferably include header modulator means for modulating data packets to include a header at a predetermined modulation and a third data rate defining a third format, and for modulating variable data at one of the first and second formats. Accordingly, the demodulator thus preferably includes header demodulator means for demodulating data packets by demodulating the header at the third format and for switching to either the first and second formats of the variable data after the header. The third format is preferably differential BPSK, and the third data rate is preferably lower than the first and second data rates.

The demodulator may preferably comprise first and second carrier tracking loops -- the first carrier tracking loop for the third format, and the second carrier tracking loop for the first and second formats. The second carrier tracking loop, in turn, may comprise a carrier numerically controlled oscillator (NCO), and NCO control means for selectively operating the carrier NCO based upon a carrier phase of the first carrier tracking loop to thereby facilitate switching to the format of the variable data. The second carrier tracking loop may also comprise a carrier loop filter, and carrier loop filter control means for selectively operating the carrier loop filter based upon a frequency of the first carrier tracking loop to facilitate switching to the format of the variable data. The carrier tracking loops permit switching to the desired format after the header and on-the-fly.

The at least one modified Walsh code function correlator of the demodulator preferably comprises a modified Walsh function generator, and a plurality of parallel connected correlators connected to the modified Walsh function generator. The modified Walsh code may be a Walsh code modified by a modulo two addition of a fixed hexadecimal code thereto. In addition, the modulator in one embodiment preferably

6

further comprises means for partitioning data into four bit nibbles of sign (one bit) and magnitude (three bits) to the modified Walsh code function encoder.

The modulator may also include spreading means for spreading each data bit using a pseudorandom (PN) sequence at a predetermined chip rate. Accordingly, the modulator may also comprise preamble modulating means for generating a preamble, and wherein the demodulator includes preamble demodulator means for demodulating the preamble for achieving initial PN sequence synchronization.

The modulator for the spread spectrum transceiver may include a scrambler, and the demodulator accordingly preferably includes a descrambler. The demodulator may also include clear channel assessing means for generating a clear channel assessment signal to facilitate communications only when the channel is clear.

The baseband processor is desirably coupled to a radio circuit for the complete spread spectrum transceiver. Accordingly, the transceiver preferably includes a quadrature intermediate frequency modulator/demodulator connected to the baseband processor, and an up/down frequency converter connected to the quadrature intermediate frequency modulator/demodulator. In addition, the radio circuit preferably further comprises a low noise amplifier having an output connected to an input of the up/down converter, and a radio frequency power amplifier having an input connected to an output of the up/down converter. The spread spectrum radio transceiver preferably also includes an antenna, and an antenna switch for switching the antenna between the output of the radio frequency power amplifier and the input of the low noise amplifier.

A method aspect of the invention is for baseband processing for spread spectrum radio

7

communication. The method preferably comprises the steps of: spread spectrum phase shift keying (PSK) modulating information for transmission by encoding information according to a predetermined bi-orthogonal code for reducing an average DC signal component; and spread spectrum PSK demodulating received information by decoding information according to the predetermined bi-orthogonal code. The predetermined bi-orthogonal code is preferably a modified Walsh function code.

Brief Description of the Drawings

FIG. 1 is a schematic circuit diagram of a transceiver in accordance with the present invention.

FIG. 2 is a schematic circuit diagram of a modulator portion of the high data rate baseband processor in accordance with the present invention.

FIG. 3 is a timing diagram of signals generated by the present invention.

FIG. 4 is a timing diagram of additional signals generated by the present invention.

FIG. 5 is a schematic circuit diagram of a demodulator portion of the high data rate baseband processor in accordance with the present invention.

FIG. 6 is a schematic circuit diagram of the correlator portion of the demodulator of the high data rate baseband processor in accordance with the present invention.

FIG. 7 is a schematic circuit diagram of additional portions of the demodulator of the high data rate baseband processor in accordance with the present invention.

FIG. 8 is a schematic circuit diagram of further portions of the demodulator of the high data rate baseband processor in accordance with the present invention.

Detailed Description of the Preferred Embodiments

The present invention will now be described more fully hereinafter with reference to the accompanying drawings, in which preferred embodiments of the invention are shown. This invention may, however, be embodied in many different forms and should not be construed as limited to the embodiments set forth herein. Rather, these embodiments are provided so that this disclosure will be thorough and complete, and will fully convey the scope of the invention to those skilled in the art. Like numbers refer to like elements throughout.

Referring to FIG. 1, a wireless transceiver 30 in accordance with the invention is first described. The transceiver 30 may be readily used for WLAN applications in the 2.4 GHz ISM band in accordance with the proposed IEEE 802.11 standard. Those of skill in the art will readily recognize other applications for the transceiver 30 as well. The transceiver 30 includes the selectable antennas 31 coupled to the radio power amplifier and TX/RX switch 32 as may be provided by a Harris part number HFA3925. As would be readily understood by those skilled in the art, multiple antennas may be provided for space diversity reception.

A low noise amplifier 38, as may be provided by Harris part number HFA3424, is also operatively connected to the antennas. The illustrated up/down converter 33 is connected to both the low noise amplifier 38 and the RF power amplifier and TX/RX switch 32 as would be readily understood by those skilled in the art. The up/down converter 33 may be provided by a Harris part number HFA3624, for example. The up/down converter 33, in turn, is connected to the illustrated dual frequency synthesizer 34 and the quad IF modulator/demodulator 35. The dual synthesizer 34 may be a Harris part number HFA3524 and the quad IF

9

modulator 35 may be a Harris part number HFA3724. All the components described so far are included in a 2.4 GHz direct sequence spread spectrum wireless transceiver chip set manufactured by Harris Corporation under the designation PRISM 1. Various filters 36, and the illustrated voltage controlled oscillators 37 may also be provided as would be readily understood by those skilled in the art and as further described in the Harris PRISM 1 chip set literature, such as the application note No. AN9614, March 1996, the entire disclosure of which is incorporated herein by reference.

Turning now more particularly to the right hand side of FIG. 1, the high data rate direct sequence spread spectrum (DSS) baseband processor 40 in accordance with the present invention is now described. The conventional Harris PRISM 1 chip set includes a low data rate DSS baseband processor available under the designation HSP3824. This prior baseband processor is described in detail in a publication entitled "Direct Sequence Spread Spectrum Baseband Processor, March 1996, file number 4064.4, and the entire disclosure of which is incorporated herein by reference.

Like the HSP3824 baseband processor, the high data rate baseband processor 40 of the invention contains all of the functions necessary for a full or half duplex packet baseband transceiver. The processor 40 has on-board dual 3-bit A/D converters 41 for receiving the receive I and Q signals from the quad IF modulator 35. Also like the HSP3824, the high data rate processor 40 includes a receive signal strength indicator (RSSI) monitoring function with the on-board 6-bit A/D converter and CCA circuit block 44 provides a clear channel assessment (CCA) to avoid data collisions and optimize network throughput as would be readily understood by those skilled in the art.

10

The present invention provides an extension of the PRISM 1 product from 1 Mbit/s BPSK and 2 Mbit/s QPSK to 5.5 Mbit/s BPSK and 11 Mbit/s QPSK. This is accomplished by keeping the chip rate constant at 11 Mchip/s. This allows the same RF circuits to be used for higher data rates. The symbol rate of the high rate mode is 11 MHz/8 = 1.375 Msymbol/s.

For the 5.5 Mbit/s mode of the present invention, the bits are scrambled and then encoded from 4 bit nibbles to 8 chip modified Walsh functions. This mapping results in bi-orthogonal codes which have a better bit error rate (BER) performance than BPSK alone. The resulting 11 Mchip/s data stream is BPSK modulated. The demodulator comprises a modified Walsh correlator and associated chip tracking, carrier tracking, and reformatting devices as described in greater detail below.

For the 11 Mbit/s mode, the bits are scrambled and then encoded from 4 bit nibbles to 8 chip modified Walsh functions independently on each I and Q rail. There are 8 information bits per symbol mapped to 2 modified Walsh functions. This mapping results in bi-orthogonal codes which have better BER performance than QPSK alone. The resulting two 11 Mchip/s data streams are QPSK modulated.

The theoretical BER performance of this type of modulation is approximately 10^{-5} at an Eb/No of 8 dB versus 9.6 dB for plain BPSK or QPSK. This coding gain is due to the bi-orthogonal coding. There is bandwidth expansion for all of the modulations to help combat multi-path and reduce the effects of interference.

Referring additionally to FIG. 2, the output of the QPSK/BPSK modulator and scrambler circuit 51 is partitioned into nibbles of Sign-Magnitude of 4 bits, with the least significant bit (LSB) first. For QPSK, 2 nibbles are presented in parallel to the Modified Walsh Generators 53a, 53b -- the first nibble from the

B serial-in/parallel-out SIPO circuit block 52b and the second from A SIPO 53a. The two nibbles form a symbol of data. The bit rate may be 11 Mbit/s as illustrated. Therefore, the symbol rate is 1.375 Mbit/s (11/8 = 1.375). For BPSK, nibbles are presented from the A SIPO 52a only. The B SIPO 52b is disabled. A nibble forms a symbol of data. The bit rate in this instance is 5.5 Mbit/s and the symbol rate remains 1.375 Mbit/s (5.5/4 = 1.375).

The Magnitude part of the SIPO output points to one of the Modified Walsh Sequences shown in the table below, along with the basic Walsh sequences for comparison.

MAG	BASIC WALSH	MODIFIED WALSH
0	00	03
1	0F	0C
2	33	30
3	3C	3F
4	55	56
5	5A	59
6	66	65
7	69	6A.

The Sel Walsh A, and Sel Walsh B bits from the clock enable logic circuit 54 multiplex the selected Walsh sequence to the output, and wherein the LSBs are output first. The A Sign and B Sign bits bypass the respective Modified Walsh Generators 53a, 53b and are XOR'd to the sequence.

As would be readily understood by those skilled in the art, there are other possible mappings of bits to Walsh symbols that are contemplated by the present invention. In addition, the Modified Walsh code may be generated by modulo two adding a fixed hexadecimal code to the basic or standard Walsh codes to thereby reduce the average DC signal component and thereby enhance overall performance as will be explained in greater detail below.

The output of the Diff encoders of the last symbol of the header CRC is the reference for the high

12

rate data. The header may always be BPSK. This reference is XOR'd to I and Q signals before the output. This allows the demodulator 60, as described in greater detail below, to compensate for phase ambiguity without Diff decoding the high rate data. Data flip flops 55a, 55b are connected to the multiplexer, although in other embodiments the flip flops may be positioned further downstream as would be readily understood by those skilled in the art. The output chip rate is 11 Mchip/s. For BPSK, the same chip sequence is output on each I and Q rail via the multiplexer 57. The output multiplexer 58 provides the selection of the appropriate data rate and format.

Referring now additionally to FIG. 3, the timing and signal format for the interface 80 is described in greater detail. Referring to the left hand portion, Sync is all 1's, and SFD is F3A0h for the PLCP preamble 90. Now relating to the PLCP header 91, the SIGNAL is:

0Ah	1 Mbit/s BPSK,
14h	2 Mbit/S QPSK,
37h	5.5 Mbit/s BPSK, and
6Eh	11 Mbit/s QPSK.

The SERVICE is 00h, the LENGTH is XXXXh wherein the length is in μs, and the CRC is XXXXh calculated based on SIGNAL, SERVICE and LENGTH. MPDU is variable with a number of octets (bytes).

The PLCP preamble and PLCP header are always at 1 Mbit/s, Diff encoded, scrambled and spread with an 11 chip barker. SYNC and SFD are internally generated. SIGNAL, SERVICE and LENGTH fields are provided by the interface 80 via a control port. SIGNAL is indicated by 2 control bits and then formatted as described. The interface 80 provides the LENGTH in μs. CRC in PLCP header is performed on SIGNAL, SERVICE and LENGTH fields.

13

MPDU is serially provided by Interface 80 and is the variable data scrambled for normal operation. The reference phase for the first symbol of the MPDU is the output phase of the last symbol of the header for Diff Encoding. The last symbol of the header into the scrambler 51 must be followed by the first bit of the MPDU. The variable data may be modulated and demodulated in different formats than the header portion to thereby increase the data rate, and while a switchover as indicated by the switchover point in FIG. 3, occurs on-the-fly.

Turning now additionally to FIG. 4, the timing of the high data rate modulator 50 may be further understood. With the illustrated timing, the delay from TX_RDY to the first Hi Rate Output Chip is ten 11 MHz clock periods or 909.1 ns. The other illustrated quantities will be readily appreciated in view of the above description.

Referring now to FIG. 5, the high data rate demodulator 60 in accordance with the invention is further described. The high rate circuits are activated after the signal field indicates 5.5 or 11 Mbit/s operation. At a certain time, the start phase is jammed into the Carrier NCO 61 and the start frequency offset is jammed into the Carrier Loop Filter 62. The signal is frequency translated by the C/S ROM 63 and the Complex Multiplier 64 and passed to the Walsh Correlator 65. The correlator 65 output drives the Symbol Decision circuits 66, as illustrated. The output of the Symbol Decision circuits 66 are serially shifted by the parallel-in/serial-out SIPO block 67 to the descrambler portion of the PSK Demodulator and Scrambler circuit 70 after passing through the Sign Correction circuit 68 based on the last symbol of the header. The timing of the switch over desirably makes the symbol decisions ready at the correct time.

14

The signal is phase and frequency tracked via the Complex Multiplier 64, Carrier NCO 61 and Carrier Loop Filter 63. The output of the Complex Multiplier 64 also feeds the Carrier Phase Error Detector 76. A decision directed Chip Phase Error Detector 72 feeds the illustrated Timing Loop Filter 75 which, in turn, is connected to the Clock Enable Logic 77. A decision from the Chip Phase Error Detector 72 is used instead of early-late correlations for chip tracking since the SNR is high. This greatly reduces the additional circuitry required for high rate operation. The 44 MHz master clock input to the Clock Control 74 will allow tracking high rate mode chips with ± 1/8 chip steps. Only the stepper is required to run at 44 MHz, while most of the remaining circuits run at 11 MHz. The circuit is only required to operate with a long header and sync.

Turning now additionally to FIG. 6, a pair of Walsh Correlators 65a, 65b is further described. The I_END and Q_END inputs from the chip tracking loop are input at 11 MHz. The Modified Walsh Generator 81 produces the 8 Walsh codes (W0 to W7) serially to sixteen parallel correlators (8 for I_END and 8 for Q_END). The sixteen correlations are available at a 1.375 MHz rate. The Walsh Codes (W0 to W7) are the same as listed in the table above for the high data rate modulator. For the 11 Mbit/s mode, the largest magnitude of I W0 to I W7 is selected by the Pick Largest Magnitude circuit 81a to form I sym. I sym is formatted in Sign-Magnitude. The Magnitude is the Modified Walsh Index (0 to 7) of the largest Correlation and Sign is the sign bit of the input of the winning Correlation. The Q channel is processed in parallel in the same manner. For the 5.5 Mbit/s mode, the largest magnitude of I W0 to I W7 is selected to form Isym. In this case, only I sym is output. AccEn

15

controls the correlator timing and is supplied by timing and control circuits.

With additional reference to FIG. 7, the carrier tracking loop 90 is now described. In the described embodiment, the number of bits are worst case for estimation purposes. While 3 bits are used for the A/D conversion, a higher number may be desired in other embodiments as would be readily appreciated by those skilled in the art. The Phase BIAS circuit 91 compensates for constellation rotation, that is, BPSK or QPSK. FSCALE compensates for the NCO clock frequency. PHASE SCALE compensates for a phase shift due to frequency offset over the time difference of the first and second loops. The Lead and Lag Shifters 92, 93 form the loop multiplier for the second order carrier tracking loop filter 62.

Referring now additionally to FIG. 8, the Chip Tracking Loop 110 is further described. All circuits except Chip Advance/Retard 111 use the 22 MHz clock signal. The Chip Advance/Retard circuit 111 may be made to integrate with the existing clock of the prior art PRISM 1 circuit. PRISM 1 steps in ± 1/4 chips. The PRISM 1 timing may be changed to switchover this circuit for high data rate operation. The A/D clock switches without a phase shift. I_ROT and Q_ROT are from the Complex Multiplier 64 at 22 MHz. They are sampled by the illustrated Registers 112 to produce I_End and Q_End at 11 MHz, which are routed to the Correlators 65 (FIG. 6). The alternate samples I_Mid and Q_Mid are used to measure the chip phase error. For QPSK, errors are generated from both rails, and for BPSK, the error is only generated from the I rail. QPSK En disables the Q rail phase error for BPSK operation.

The sign of the accumulator is used to advance or retard the chip timing by 1/8 chip. This circuit must be enabled by the PRISM 1 circuits at the

16

proper time via the HI_START signal. The errors are summed and accumulated for 32 symbols (256 chips). The Chip Track Acc signal them dumps the accumulator for the next measurement. The chip phase error is generated if the End Sign bits bracketing the Mid sample are different. This is accomplished using the transition detectors. The sign of the chip phase error is determined by the sign of the End sample after the Mid sample. A multiplier 114 is shown for multiplying by +1 if the End Sign is 0 or by -1 if the End Sign is 1. If the End sign bits are identical, the chip phase error for that rail is 0. The AND function is only enabled by transitions.

Many modifications and other embodiments of the invention will come to the mind of one skilled in the art having the benefit of the teachings presented in the foregoing descriptions and the associated drawings. Therefore, it is to be understood that the invention is not to be limited to the specific embodiments disclosed, and that modifications and embodiments are intended to be included within the scope of the appended claims.

THAT WHICH IS CLAIMED IS:

1. A spread spectrum radio transceiver comprising:

a baseband processor and a radio circuit connected thereto, said baseband processor comprising

a demodulator for spread spectrum phase shift keying (PSK) demodulating information received from said radio circuit,

at least one analog-to-digital (A/D) converter having an output connected to said demodulator and an input AC-coupled to said radio circuit,

said demodulator comprising at least one modified Walsh code function correlator for decoding information according to a modified Walsh code reducing an average DC signal component which in combination with the AC-coupling to said at least one A/D converter enhances overall performance, and

a modulator for spread spectrum PSK modulating information for transmission via the radio circuit, said modulator comprising at least one modified Walsh code function encoder for encoding information according to the modified Walsh code.

2. A spread spectrum radio transceiver according to Claim 1 wherein said modulator comprises means for operating in one of first format defined by bi-phase PSK (BPSK) modulation at a first data rate and a second format defined by quadrature PSK (QPSK) modulation at a second data rate; and wherein said demodulator comprises means for operating in one of the first and second formats.

18

3. A spread spectrum radio transceiver according to Claim 2 wherein said modulator comprises header modulator means for modulating data packets to include a header at a third format defined by a predetermined modulation at a third data rate and variable data in one of the first and second formats; and wherein said demodulator comprises header demodulator means for demodulating data packets by demodulating the header at the third format and for switching to the respective one of the first and second formats of the variable data after the header.

4. A spread spectrum radio transceiver according to Claim 3 wherein the predetermined modulation of the third format is differential BPSK (DBPSK), and wherein the third data rate is lower than the first and second data rates.

5. A spread spectrum radio transceiver according to Claim 3 wherein said demodulator further comprises:

a first carrier tracking loop for the third format; and

a second carrier tracking loop for the first and second formats.

6. A spread spectrum radio transceiver according to Claim 5 wherein said second carrier tracking loop comprises:

a carrier numerically controlled oscillator (NCO); and

carrier NCO control means for selectively operating said carrier NCO based upon a carrier phase of said first carrier tracking loop to thereby facilitate switching to the format of the variable data.

19.

7. A spread spectrum radio transceiver according to Claim 5 wherein said second carrier tracking loop comprises:

a carrier loop filter; and

carrier loop filter control means for selectively operating said carrier loop filter based upon a frequency of said first carrier tracking loop to thereby facilitate switching to the format of the variable data.

8. A spread spectrum radio transceiver according to Claim 1 wherein said modulator further comprises means for partitioning data into four bit nibbles of sign (one bit) and magnitude (three bits) to said at least one modified Walsh code function encoder.

9. A spread spectrum radio transceiver according to Claim 1 wherein the modified Walsh code is a Walsh code modified by a modulo two addition of a fixed hexadecimal code thereto.

10. A spread spectrum radio transceiver according to Claim 1 wherein said at least one modified Walsh code function correlator comprises:

a modified Walsh function generator; and

a plurality of parallel connected correlators connected to said modified Walsh function generator.

11. A spread spectrum radio transceiver according to Claim 1 wherein said modulator comprises spreading means for spreading each data bit using a pseudorandom (PN) sequence at a predetermined chip rate and preamble modulating means for generating a preamble; and wherein said demodulator comprises preamble demodulator means for demodulating the preamble for achieving initial PN sequence synchronization.

20

12. A spread spectrum radio transceiver according to Claim 1 wherein said modulator comprises a scrambler; and wherein said demodulator comprises a descrambler.

13. A spread spectrum radio transceiver according to Claim 1 wherein said demodulator comprises clear channel assessing means for generating a clear channel assessment signal.

14. A spread spectrum radio transceiver according to Claim 1 wherein said radio circuit comprises:

a quadrature intermediate frequency modulator/demodulator connected to said baseband processor; and

an up/down frequency converter connected to said quadrature intermediate frequency modulator/demodulator.

15. A spread spectrum radio transceiver according to Claim 14 wherein said radio circuit further comprises:

a low noise amplifier having an output connected to an input of said up/down converter; and

a radio frequency power amplifier having an input connected to an output of said up/down converter.

16. A spread spectrum radio transceiver according to Claim 15 further comprising:

an antenna; and

an antenna switch for switching said antenna between the output of said radio frequency power amplifier and the input of said low noise amplifier.

21

Best Available Copy

17. A baseband processor for a spread spectrum radio transceiver, said baseband processor comprising:

a demodulator for spread spectrum phase shift keying (PSK) demodulating;

at least one analog-to-digital (A/D) converter having an output connected to said demodulator and an input AC-coupled to receive information;

said demodulator comprising at least one predetermined orthogonal code function correlator for decoding information according to a predetermined orthogonal code reducing an average DC signal component to thereby increase AC-coupling to said at least one A/D converter; and

a modulator for spread spectrum PSK modulating information for transmission, said modulator comprising at least one predetermined orthogonal code function encoder for encoding information according to the predetermined orthogonal code.

18. A baseband processor according to Claim 17 wherein said modulator comprises means for operating in one of first format defined by bi-phase PSK (BPSK) modulation at a first data rate and a second format defined by quadrature PSK (QPSK) modulation at a second data rate; and wherein said demodulator comprises means for operating in one of the first and second formats.

19. A baseband processor according to Claim 18 wherein said modulator comprises header modulator means for modulating data packets to include a header at a third format defined by a predetermined modulation at a third data rate and variable data in one of the first and second formats; and wherein said demodulator comprises header demodulator means for demodulating data packets by demodulating the header at the third

22

format and for switching to the respective one of the first and second formats of the variable data after the header.

20. A baseband processor according to Claim 19 wherein the predetermined modulation of the third format is differential BPSK (DBPSK), and wherein the third data rate is lower than the first and second data rates.

21. A baseband processor according to Claim 19 wherein said demodulator further comprises:

a first carrier tracking loop for the third format; and

a second carrier tracking loop for the first and second formats.

22. A baseband processor according to Claim 21 wherein said second carrier tracking loop comprises:

a carrier numerically controlled oscillator (NCO); and

carrier NCO control means for selectively operating said carrier NCO based upon a carrier phase of said first carrier tracking loop to thereby facilitate switching to the format of the variable data.

23. A baseband processor according to Claim 21 wherein said second carrier tracking loop comprises:

a carrier loop filter; and

carrier loop filter control means for selectively operating said carrier loop filter based upon a frequency of said first carrier tracking loop to thereby facilitate switching to the format of the variable data.

23.

24. A baseband processor according to Claim 17 wherein said modulator further comprises means for partitioning data into four bit nibbles of sign (one bit) and magnitude (three bits) to said at least one predetermined orthogonal code function encoder.

25. A baseband processor according to Claim 17 wherein the predetermined orthogonal code is a Walsh code modified by a modulo two addition of a fixed hexadecimal code thereto.

26. A baseband processor according to Claim 17 wherein the predetermined orthogonal code is a bi-orthogonal code.

27. A baseband processor according to Claim 17 wherein said at least one predetermined orthogonal code function correlator comprises;

a predetermined orthogonal code function generator; and

a plurality of parallel connected correlators connected to said predetermined orthogonal code function generator.

28. A baseband processor according to Claim 17 wherein said modulator comprises spreading means for spreading each data bit using a pseudorandom (PN) sequence at a predetermined chip rate and preamble modulating means for generating a preamble; and wherein said demodulator comprises preamble demodulator means for demodulating the preamble for achieving initial PN sequence synchronization.

29. A baseband processor according to Claim 17 wherein said modulator comprises a scrambler; and wherein said demodulator comprises a descrambler.

24

30. A baseband processor for a spread spectrum radio transceiver, said baseband processor comprising:

a modulator for spread spectrum phase shift keying (PSK) modulating information for transmission, said modulator comprising

at least one encoder for encoding information for transmission,

means for operating in one of a first format defined by bi-phase PSK (BPSK) modulation at a first data rate and a second format defined by quadrature PSK (QPSK) modulation at a second data rate,

header modulator means for modulating data packets to include a header at a third format defined by a predetermined modulation at a third data rate and variable data in one of the first and second formats; and

a demodulator for spread spectrum PSK demodulating received information, said demodulator comprising

at least one correlator for decoding received information,

means for operating in one of the first and second formats,

header demodulator means for demodulating data packets by demodulating the header at the third format and for switching to the respective one of the first and second formats of the variable data after the header,

a first carrier tracking loop for the third format, and

a second carrier tracking loop for the first and second formats.

25

31. A baseband processor according to Claim 30 wherein the predetermined modulation of the third format is differential BPSK (DBPSK), and wherein the third data rate is lower than the first and second data rates.

32. A baseband processor according to Claim 30 wherein said second carrier tracking loop comprises:

a carrier numerically controlled oscillator (NCO); and

carrier NCO control means for selectively operating said carrier NCO based upon a carrier phase of said first carrier tracking loop to thereby facilitate switching to the format of the variable data.

33. A baseband processor according to Claim 30 wherein said second carrier tracking loop comprises:

a carrier loop filter; and

carrier loop filter control means for selectively operating said carrier loop filter based upon a frequency of said first carrier tracking loop to thereby facilitate switching to the format of the variable data.

34. A baseband processor according to Claim 30 wherein said modulator comprises spreading means for spreading each data bit using a pseudorandom (PN) sequence at a predetermined chip rate and preamble modulating means for generating a preamble; and wherein said demodulator comprises preamble demodulator means for demodulating the preamble for achieving initial PN sequence synchronization.

35. A baseband processor according to Claim 30 wherein said modulator comprises a scrambler; and wherein said demodulator comprises a descrambler.

26

36. A modulator for a spread spectrum radio transceiver, said modulator comprising:

modulator means for spread spectrum phase shift keying (PSK) modulating information for transmission, said modulator means comprising at least one predetermined orthogonal code function encoder for encoding information according to a predetermined orthogonal code for reducing an average DC signal component.

37. A modulator according to Claim 36 wherein said modulator means comprises means for operating in one of first format defined by bi-phase PSK (BPSK) modulation at a first data rate and a second format defined by quadrature PSK (QPSK) modulation at a second data rate.

38. A modulator according to Claim 37 wherein said modulator means comprises header modulator means for modulating data packets to include a header at a third format defined by a predetermined modulation at a third data rate and variable data in one of the first and second formats.

39. A modulator according to Claim 38 wherein the predetermined modulation of the third format is differential BPSK (DBPSK), and wherein the third data rate is lower than the first and second data rates.

40. A modulator according to Claim 36 wherein said modulator means further comprises means for partitioning data into four bit nibbles of sign (one bit) and magnitude (three bits) to said at least one predetermined orthogonal code function encoder, and wherein the predetermined orthogonal code is a Walsh

27

code modified by a modulo two addition of a fixed hexadecimal code thereto.

41. A modulator according to Claim 36 wherein said at least one predetermined orthogonal code function correlator comprises:

a predetermined orthogonal code function generator; and

a plurality of parallel connected correlators connected to said predetermined orthogonal code function generator.

42. A modulator according to Claim 36 wherein the predetermined orthogonal code is a Walsh code modified by a modulo two addition of a fixed hexadecimal code thereto.

43. A modulator according to Claim 36 wherein the predetermined orthogonal code is a bi-orthogonal code.

44. A demodulator for a spread spectrum radio transceiver, said demodulator comprising:

demodulator means for spread spectrum phase shift keying (PSK) demodulating information received from said radio circuit, said demodulator means comprising at least one predetermined orthogonal code function correlator for decoding information according to a predetermined orthogonal code reducing an average DC signal component.

45. A demodulator according to Claim 44 wherein said demodulator means comprises means for operating in one of first format defined by bi-phase PSK (BPSK) modulation at a first data rate and a second format defined by quadrature PSK (QPSK) modulation at a second data rate.

28.

46. A demodulator according to Claim 45 wherein said demodulator means comprises header demodulator means for demodulating data packets including a header in a third format defined by a predetermined modulation at a third data rate and variable data in one of the first and second formats, and for switching to the respective one of the first and second formats of the variable data after the header.

47. A demodulator according to Claim 46 wherein the predetermined modulation of the third format is differential BPSK (DBPSK), and wherein the third data rate is lower than the first and second data rates.

48. A demodulator according to Claim 46 wherein said demodulator means further comprises:

a first carrier tracking loop for the third format; and

a second carrier tracking loop for the first and second formats.

49. A demodulator according to Claim 48 wherein said second carrier tracking loop comprises:

a carrier numerically controlled oscillator (NCO); and

carrier NCO control means for selectively operating said carrier NCO based upon a carrier phase of said first carrier tracking loop to thereby facilitate switching to the format of the variable data.

50. A demodulator according to Claim 48 wherein said second carrier tracking loop comprises:

a carrier loop filter; and

29

carrier loop filter control means for selectively operating said carrier loop filter based upon a frequency of said first carrier tracking loop to thereby facilitate switching to the format of the variable data.

51. A demodulator according to Claim 44 further comprising means for partitioning data into four bit nibbles of sign (one bit) and magnitude (three bits).

52. A demodulator according to Claim 44 wherein the predetermined orthogonal code is a Walsh code modified by a modulo two addition of a fixed hexadecimal code thereto.

53. A demodulator according to Claim 44 wherein the predetermined orthogonal code is a bi-orthogonal code.

54. A demodulator according to Claim 44 wherein said at least one predetermined orthogonal code function correlator comprises:

a predetermined orthogonal code function generator; and

a plurality of parallel connected correlators connected to said predetermined orthogonal code function generator.

55. A method for baseband processor for spread spectrum radio communication, the method comprising the steps of:

spread spectrum phase shift keying (PSK) modulating information for transmission while encoding the information according to the predetermined orthogonal code for reducing an average DC signal component; and

30.

spread spectrum PSK demodulating received information by decoding the received information according to the predetermined orthogonal code.

56. A method according to Claim 55 further comprising the step of AC-coupling received information for spread spectrum PSK demodulating so that the reduced average DC signal component in combination with the AC-coupling enhances overall performance.

57. A method according to Claim 55 further comprising the steps of modulating and demodulating in one of first format defined by bi-phase PSK (BPSK) modulation at a first data rate and a second format defined by quadrature PSK (QPSK) modulation at a second data rate.

58. A method according to Claim 57 further comprising the steps of:

modulating data packets to include a header at a third format defined by a predetermined modulation at a third data rate and variable data in one of the first and second formats; and

demodulating data packets by demodulating the header at the third format and for switching to the respective one of the first and second formats of the variable data after the header.

59. A method according to Claim 58 wherein the predetermined modulation of the third format is differential BPSK (DBPSK), and wherein the third data rate is lower than the first and second data rates.

60. A method according to Claim 55 wherein the predetermined orthogonal code is a Walsh code modified by a modulo two addition of a fixed hexadecimal code thereto.

61. A method according to Claim 55 wherein the predetermined orthogonal code is a bi-orthogonal code.

32

HIGH DATA RATE SPREAD SPECTRUM TRANSCEIVER AND ASSOCIATED METHODS

Abstract of the Disclosure

A spread spectrum radio transceiver includes a high data rate baseband processor and a radio circuit connected thereto. The baseband processor preferably includes a modulator for spread spectrum phase shift keying (PSK) modulating information for transmission via the radio circuit. The modulator may include at least one modified Walsh code function encoder for encoding information according to a modified Walsh code for substantially reducing an average DC signal component to thereby enhance overall system performance when AC-coupling the received signal through at least one analog-to-digital converter to the demodulator. The demodulator is for spread spectrum PSK demodulating information received from the radio circuit. The modulator and demodulator are each preferably operable in one of a bi-phase PSK (BPSK) mode at a first data rate and a quadrature PSK (QPSK) mode at a second data rate. These formats may also be switched on-the-fly in the demodulator. Method aspects are also disclosed.

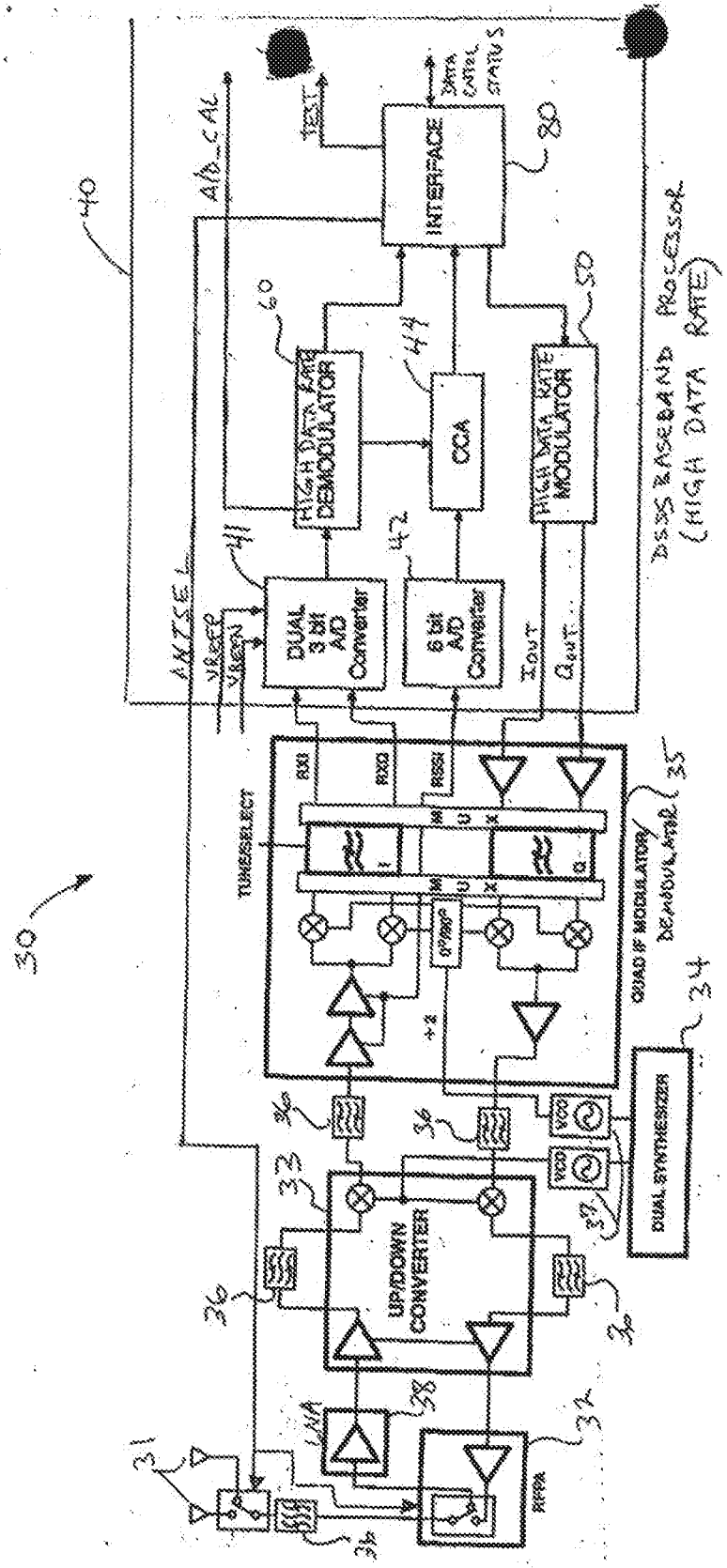
INTERFACE
TEST
DATA
CONTROL
STATUS
AD_CAL
HIGH DATA RATE DEMODULATOR
CCA
HIGH DATA RATE MODULATOR
DSSS BASEBAND PROCESSOR (HIGH DATA RATE)
DUAL 8 BIT AD Converter
6 bit AD Converter
IOUT
QOUT
AGC SEL
VAGC P
VAGC N
TUNE SELECT
QUAD IF MODULATOR/DEMODULATOR
DUAL SYNTHESIZER
UP/DOWN CONVERTER
LNA
RFPA

FIG. 1

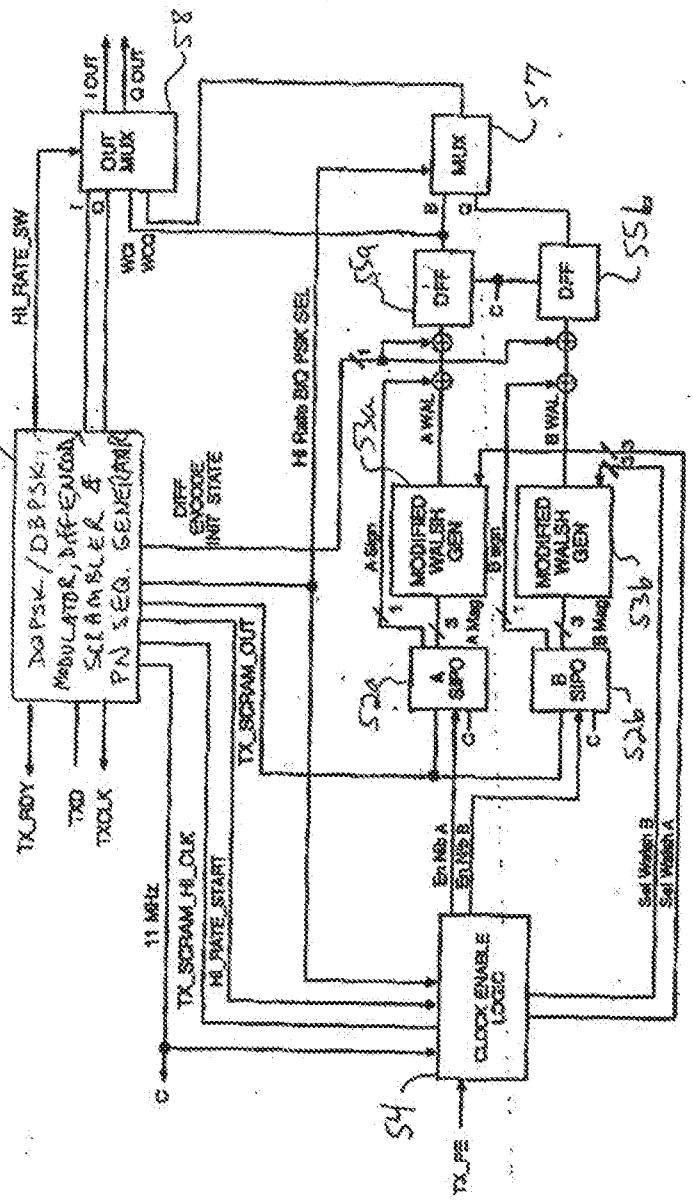
50
51
52
53
54
55
56
57
58
59
HI_RATE_SW
I OUT
Q OUT
OUT MUX
MUX
DIFF
DIFF
MODIFIED WALSH GEN
MODIFIED WALSH GEN
A SIPO
B SIPO
CLOCK ENABLE LOGIC
TX_RDY
TXD
TXCLK
11 MHz
TX_SCRAM_HI_CLK
HI_RATE_START
TX_SCRAM_OUT
TX_FS
Hi Rate BIO PSK SEL
DIFF ENCODE INIT STATE

FIG. 2

08/819846

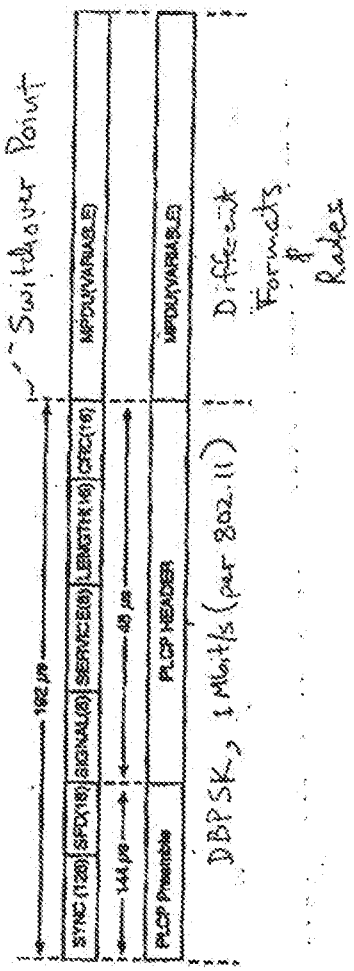

FIG. 3

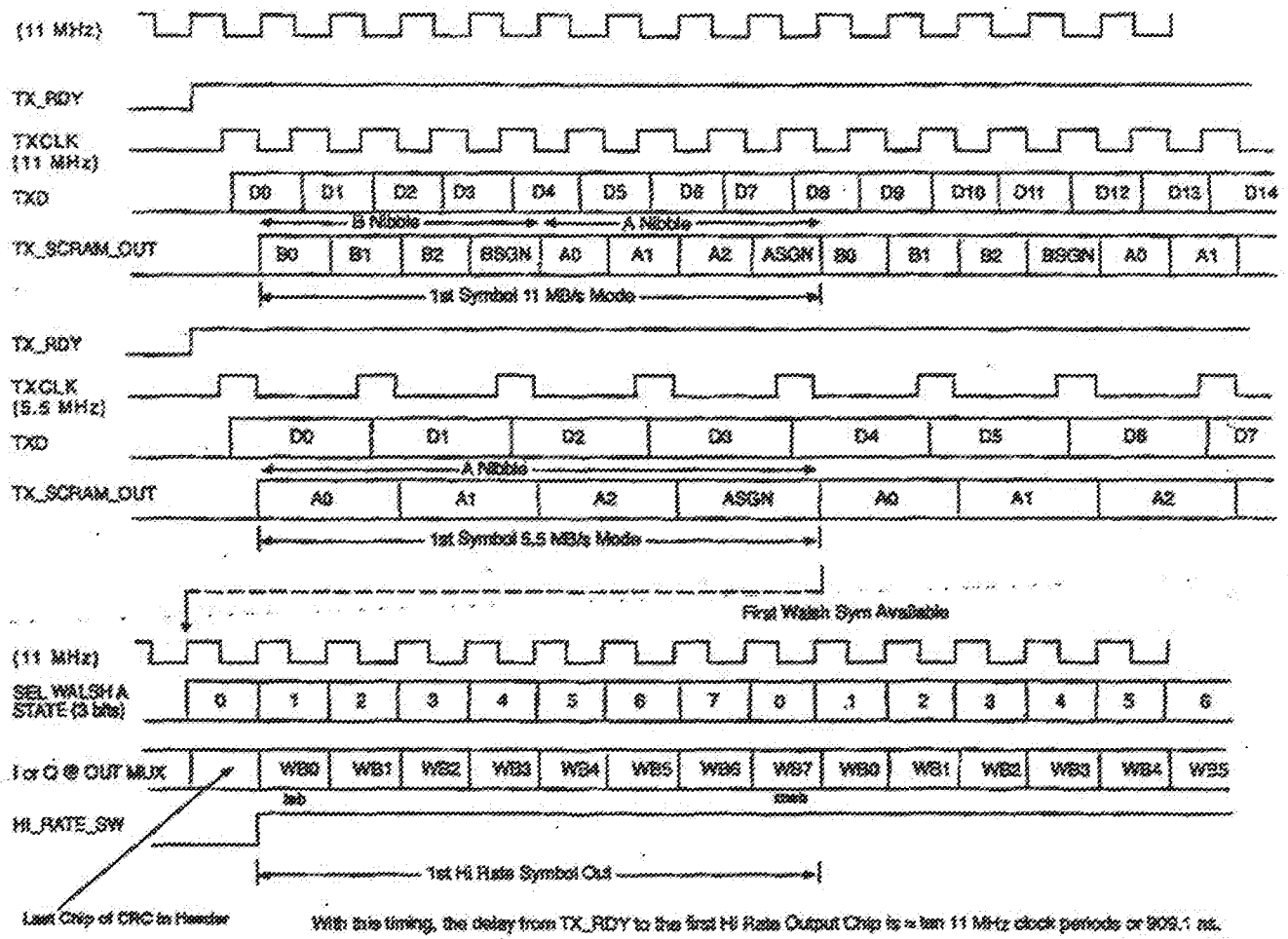

FIG 11

08/819846

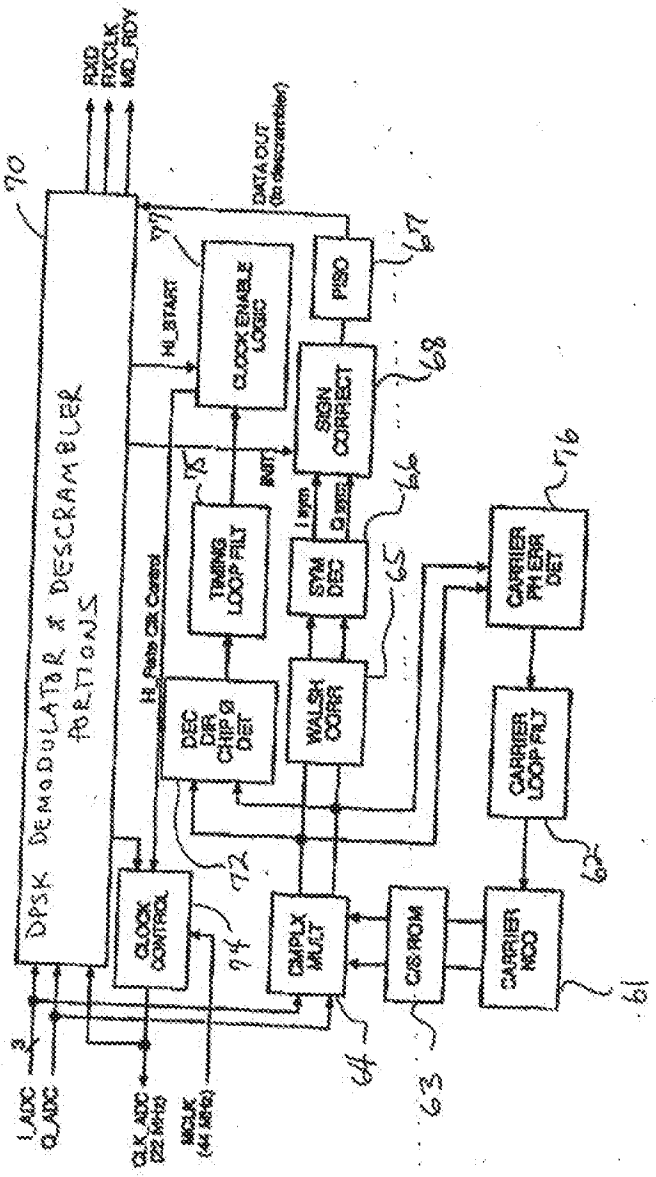
DPSK DEMODULATOR & DESCRAMBLER PORTIONS
RXD
RXCLK
MD_RDY
DATA OUT
CLOCK ENABLE LOGIC
PISO
SIGN CORRECT
TIMING LOOP FILT
SYM DEC
WALSH CORR
DEC FOR CHIP 9 DET
CARRIER PH ERR DET
CARRIER LOOP FILT
CARRIER NCO
COS ROM
CMPLX MULT
CLOCK CONTROL
I_ADC
Q_ADC
CLK ADC (22 MHz)
MCLK (44 MHz)
INIT
66
70
77
68
67
76
75
65
72
74
69
64
63
61

FIG. 5

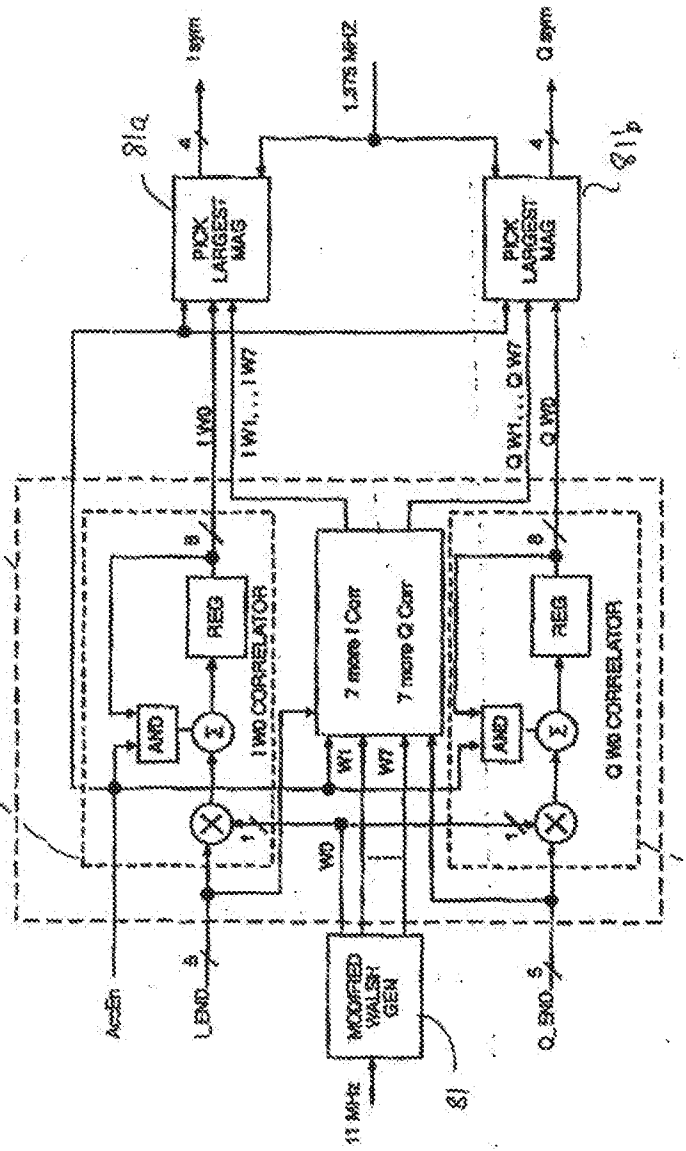
I sym
1.375 MHz
Q sym
81a
81b
PICK LARGEST MAG
PICK LARGEST MAG
I W0
I W1,...I W7
Q W1,...Q W7
Q W0
REG
REG
AND
AND
I W0 CORRELATOR
7 more I Corr
7 more Q Corr
Q W0 CORRELATOR
W1
W7
W0
Acc2n
I_END_5
MODIFIED WALSH GEN
Q_END_5
11 MHz
81

FIG.6

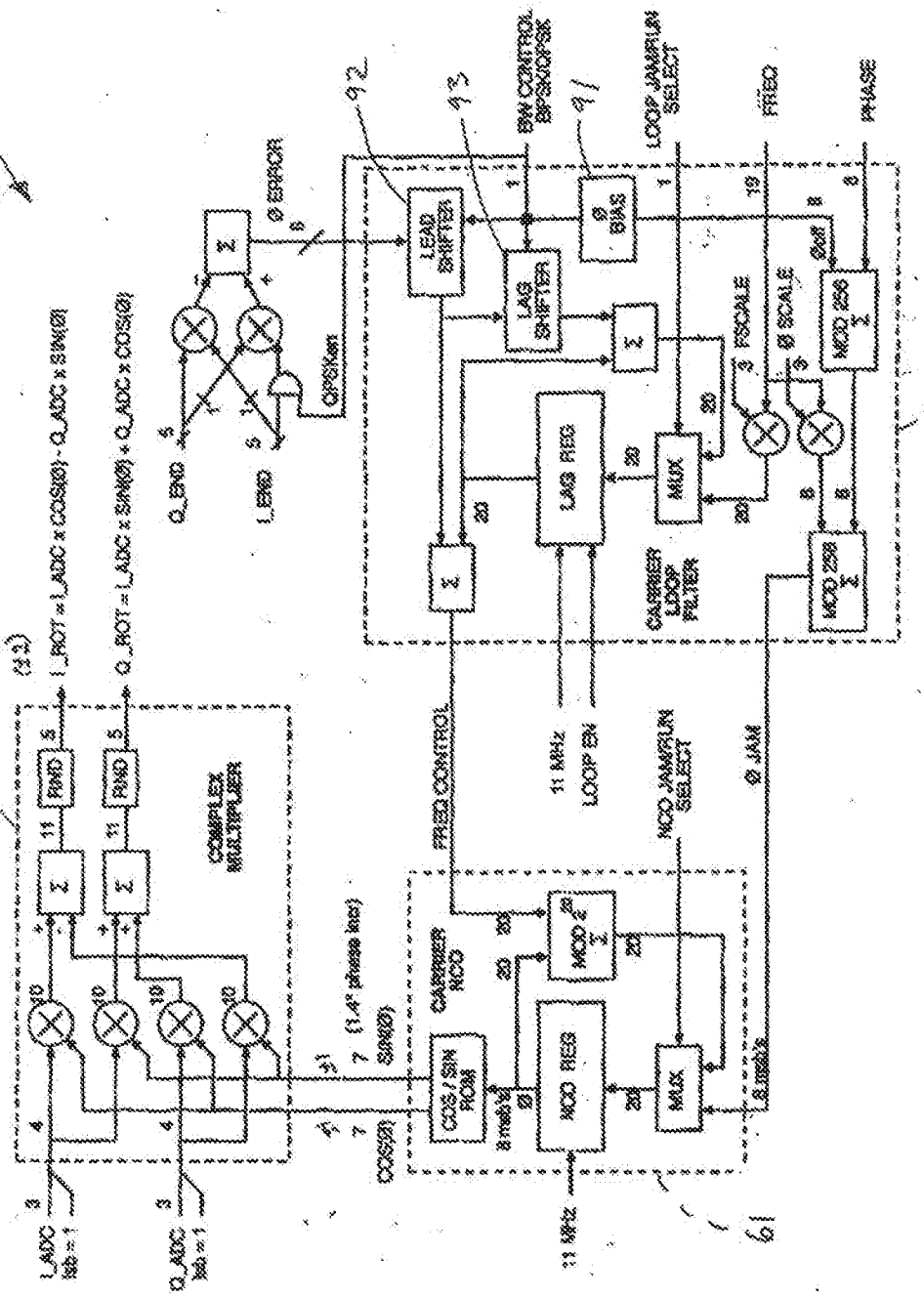
90
92
93
91
BW CONTROL BPSK/QPSK
LOOP JAMRUN SELECT
FREQ
PHASE
Ø ERROR
LEAD SHIFTER
LAG SHIFTER
Ø BIAS
MCO 256
Ø SCALE
FSCALE
QPSKen
Q_END
I_END
LAG REG
MUX
CARRIER LOOP FILTER
62
I_ROT = I_ADC x COS(Ø) - Q_ADC x SIN(Ø)
Q_ROT = I_ADC x SIN(Ø) + Q_ADC x COS(Ø)
(12)
64
RND
COMPLEX MULTIPLIER
FREQ CONTROL
11 MHz
LOOP BW
NCO JAMRUN SELECT
Ø JAM
CARRIER NCO
MCO 2
COS / SIN ROM
NCO REG
(1.4° phase loss)
SIN(Ø)
COS(Ø)
I_ADC lsb = 1
Q_ADC lsb = 1
11 MHz
61

FIG. 7

08/819846

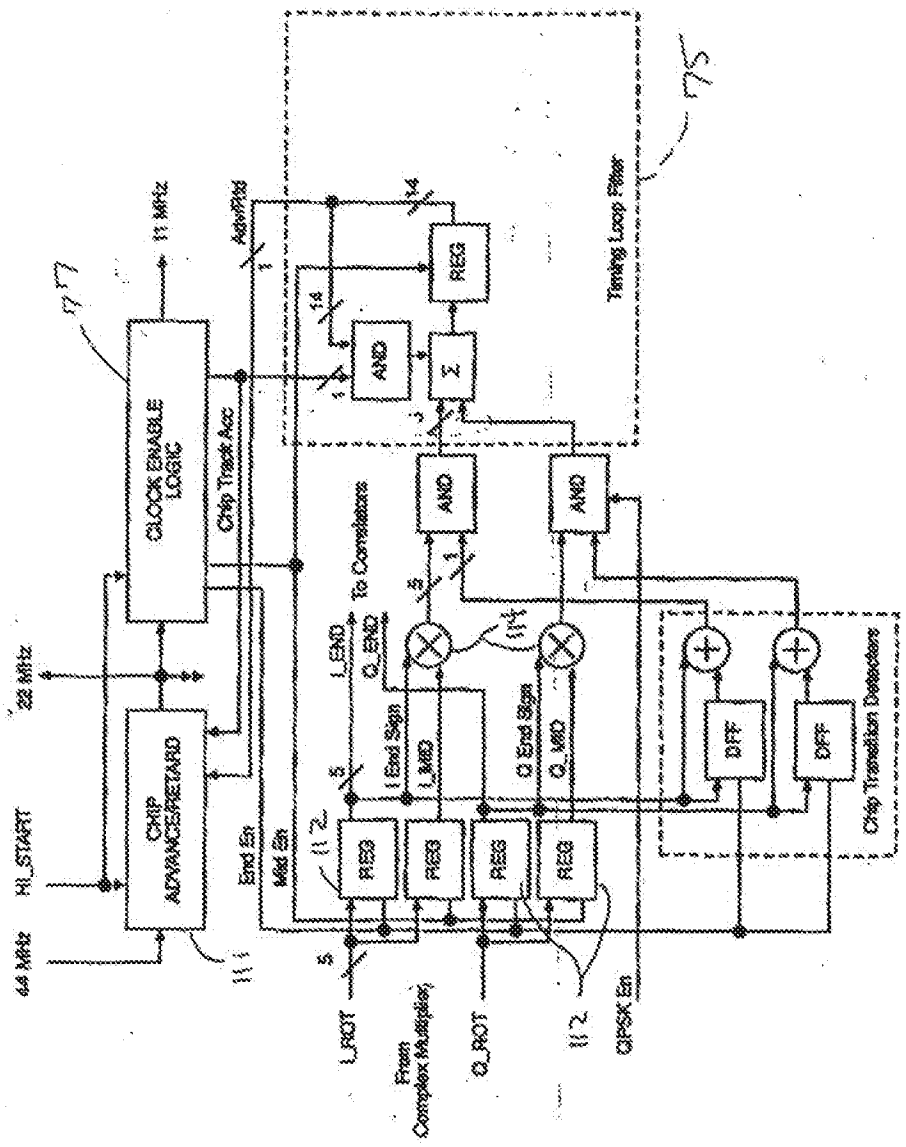

FIG. 8

MAIL ROOM
EXP MAR 17 1997 10

08/819846

IN THE UNITED STATES PATENT AND TRADEMARK OFFICE

In re Patent Application of:
JAMES LEROY SNELL

Serial No. Not Yet Assigned

Filed: Herewith

For: HIGH DATA RATE SPREAD SPECTRUM TRANSCEIVER AND ASSOCIATED METHODS

#4/IDS w/ATT
10-28-97

Date: March 7, 1997

CITATION UNDER 37 CFR §1.97

Honorable Commissioner of Patents
and Trademarks
Washington, D.C. 20231

Sir:

Attached is a form PTO-1449 listing several references for consideration in the examination of the above-identified application. A copy of each reference is also enclosed. It is requested that these references be considered by the Examiner and officially made of record in accordance with the provisions of 37 CFR §1.97 and Section 609 of the MPEP.

Respectfully submitted,

CHRISTOPHER F. REGAN
Reg. No. 34,906
Allen, Dyer & Doppelt, Milbrath & Gilchrist, P.A.
255 S. Orange Avenue, Suite 1401
Post Office Box 3791
Orlando, Florida 32802
407/841-2330

CERTIFICATE OF MAILING BY "EXPRESS MAIL"

"EXPRESS MAIL" MAILING LABEL NUMBER EH524637744US

DATE OF DEPOSIT MARCH 17, 1997

I HEREBY CERTIFY THAT THIS PAPER OR FEE IS BEING DEPOSITED WITH THE UNITED STATES POSTAL SERVICE "EXPRESS MAIL POST OFFICE TO ADDRESSEE" SERVICE UNDER 37 CFR 1.10 ON THE DATE INDICATED ABOVE AND IS ADDRESSED TO THE COMMISSIONER OF PATENTS AND TRADEMARKS, WASHINGTON, D.C. 20231

BARBARA GORES
TYPED OR PRINTED NAME OF PERSON MAILING PAPER OR FEE

Barbara Gores
SIGNATURE OF PERSON MAILING PAPER OR FEE

MAIL ROOM
EXP MAR 17 1997 10
PAT & TRADEMARK OFF.

FORM PTO-1449
LIST OF PATENTS AND
APPLICANT'S INFORMATION DISCLOSURE STATEMENT

ATTORNEY DOCKET NO.: SE-1301-MR/RG388 (18336)

SERIAL NO.: 08/819846 ~~Not Yet Assigned~~ FILING DATE: Herewith

APPLICANT: JAMES LEROY SNELL GROUP: 2734

REFERENCE DESIGNATION U.S. PATENT DOCUMENTS

EXAMINER INITIALS		DOCUMENT NUMBER	DATE	NAME	CLASS	SUB CLASS	FILING IF APPROPRIATE
M.GL	AA	4,626,796	12/02/86	Elder	331	1 A	
	AB	5,183,458	04/07/92	Gilhousen et al.	375	1	
	AC	5,309,474	05/03/94	Gilhousen et al.	375	1	
	AD	5,416,797	05/16/95	Gilhousen et al.	375	70S	
	AE	5,515,396	05/07/96	Dalekotzin	375	366	
	AF	5,535,238	07/09/96	Padovani et al.	375	20S	
M.GL	AG	5,577,525	11/19/96	Skinner et al.	370	32	
	AH						
	AI						
	AJ						

FOREIGN PATENT DOCUMENTS

		DOCUMENT NUMBER	DATE	COUNTRY	CLASS	SUBCLASS	TRANSLATION Yes -- No
	AK						

OTHER ART
(Including Author, Title, Date, Pertinent Pages, etc.)

M.GL	AL		Harris Corporation Application Note entitled "Harris PRISM Chip Set", No. AN9614, March 1996
	AM		Harris Corporation, "PRISM 2.4 GHz Chip Set", File No. 4083.4, October 1996
	AN		Harris Corporation Tech Brief entitled "A Brief Tutorial on Spread Spectrum and Packet Radio", No. TB337.3, May 1996
M.GL	AO		Harris Corporation, "Direct Sequence Spread Spectrum Baseband Processor", File No. 4064.4, October 1996

EXAMINER: M. Ghayour DATE CONSIDERED: 10/28/98

EXAMINER: Initial if reference considered, whether or not citation is in conformance with MPEP 609; * Draw line through citation if not in conformance and not considered. Include copy of this form with next communication to applicant.

Other Prior Art

According to the information contained in form PTO-1449 or PTO-892, there are one or more other prior art/non-patent literature documents missing from the original file history record obtained from the United States Patent and Trademark Office. Upon your request we will attempt to obtain these documents from alternative resources. Please note that additional charges will apply for this service.

This page is not part of the official USPTO record. It has been determined that content identified on this document is missing from the original file history record.

Harris Semiconduct

APPNOTE

No. AN9614 March 1998

Harris PRISM™ Chip Set

Using the PRISM™ Chip Set for Low Data Rate Applications

Authors: Carl Andren and John Fakatselis

Introduction

The PRISM™ chip set has been optimized to address high data rate applications with up to 4 MBPS data rates. The PRISM™ can also be utilized for low data rate applications. To implement low data rate applications (below 250 KBPS) the designer needs to address design considerations in the following areas:

A. Selection of external filtering supporting the PRISM™ components.

B. Limitations on filter cut off frequencies of the HFA3724 Internal Low Pass Filters.

C. Selection of appropriate carrier and clock oscillators to achieve the desired performance, given the HSP3824 Internal Acquisition and Tracking loop integration constraints.

The system designer should also evaluate the option where the radio maintains its high data rate configuration but transmits the data using infrequent high data rate burst packets.

Where the system requires that the radio operate at low rates (<250 KBPS), the designer must address the areas highlighted on the PRISM™ block diagram shown in Figure 1.

Description

A. External IF Filtering

The band pass filters shown between the HFA3624 and the HFA3724 labeled as BPF1a and BPF1b on Figure 1 are centered at IF and filter the spread wideband waveform before demodulation on the receive side and before the final upconversion on the transmit side.

One might think that the TX filter can be avoided but it is required to meet the sidelobe suppression specifications according to FCC requirements.

PRISM™ PCMCIA Reference Radio Block Diagram

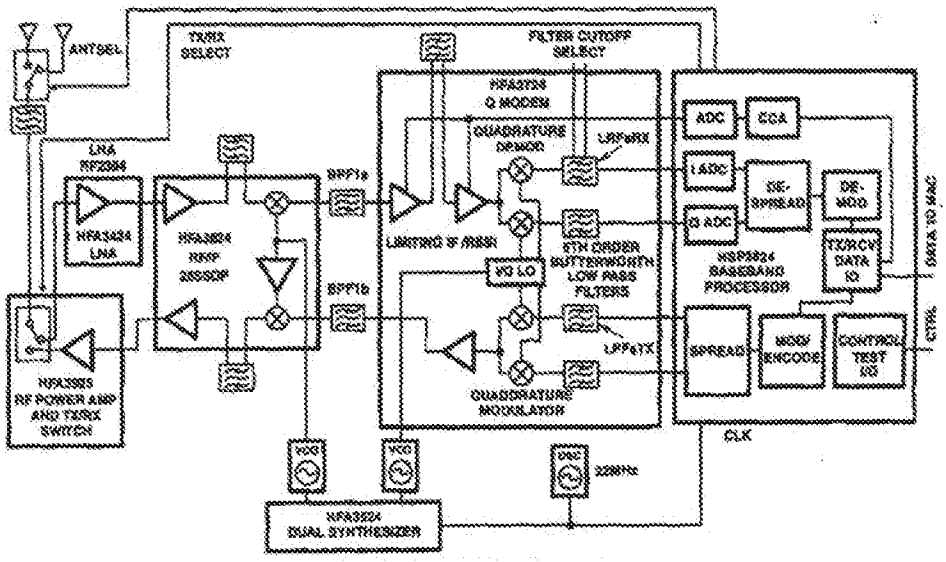

FIGURE 1. PRISM™ CHIP SET BLOCK DIAGRAM

PRISM™ and the PRISM™ logo are trademarks of Harris Corporation.

Copyright © Harris Corporation 1998

Typical 802.11 DS-PHY System Level Performance (Note 5) (Measured at a diversity antenna port)

Receiver

- Frequency Range ..... 2.4GHz - 2.4835GHz
- Step Size 1MHz
- Cascaded Noise Figure 6.5dB
- Sensitivity ..... -83dBm, 1 MBPS, BE-2 FER (Note 1)
  -80dBm, 2 MBPS, BE-2 FER (Note 1)
- Input Intercept Point ..... -17dBm
- IF Frequency 280MHz
- IF Bandwidth 17MHz
- Image Rejection 80dB
- Adjacent Channel Rejection ..... >55dB
- Supply Voltage ..... 2.7V - 5.5V

Transmitter

- Frequency Range ..... 2.4GHz - 2.4835GHz
- Step Size 1MHz
- Output Power ..... +18dBm
- Spurious Outputs ..... Targeting ISM/802.11
- Transmit Spectral Mask ..... -32dBr at First Side-Lobe
- IF Frequency 280MHz
- Supply Voltage ..... 2.7V - 5.5V

General Specifications

- Targeted Standard ..... IEEE 802.11
- Data Rate ..... 1 MBPS DBPSK
  2 MBPS DQPSK
- Range ..... 400ft Indoor (Note 2)
  3700ft Outdoor (Note 2)
- RX/TX Switching Speed 2µs
- Standby Current
  - Mode 1: 240mA at 1µs Recovery (Notes 3, 4)
  - Mode 2: 58mA at 35µs Recovery (Notes 3, 4)
  - Mode 3: 47mA at 2ms Recovery (Notes 3, 4)
  - Mode 4: 33mA at 25ms Recovery (Notes 3, 4)
- Active Mode Current 304mA

NOTES:

1. FER = Frame Error Rate or Packet Error Rate.
2. Range Test using AND-C-197 omnidirectional antenna.
3. Supply current includes AM79C930 MAC Processor.
4. Recovery time is for the PRISM™ 2.4GHz Chip Set only and does not include programming latency of the AM79C930 MAC Processor.
5. Refer to Application Note AN9624 for more information on the "PRISM™ DSSS PC Card Wireless LAN Description".

All Harris Semiconductor products are manufactured, assembled and tested under ISO9000 quality systems certification.

Harris Semiconductor products are sold by description only. Harris Semiconductor reserves the right to make changes in circuit design and/or specifications at any time without notice. Accordingly, the reader is cautioned to verify that data sheets are current before placing orders. Information furnished by Harris is believed to be accurate and reliable. However, no responsibility is assumed by Harris or its subsidiaries for its use; nor for any infringements of patents or other rights of third parties which may result from its use. No license is granted by implication or otherwise under any patent or patent rights of Harris or its subsidiaries.

Sales Office Headquarters

For general information regarding Harris Semiconductor and its products, call 1-800-4-HARRIS

NORTH AMERICA
Harris Semiconductor
P. O. Box 883, Mail Stop 53-210
Melbourne, FL 32902
TEL: 1-800-442-7747
(407) 729-4984
FAX: (407) 729-9321

EUROPE
Harris Semiconductor
Mercure Center
100, Rue de la Fusee
1130 Brussels, Belgium
TEL: (32) 2.724.2111
FAX: (32) 2.724.22.05

ASIA
Harris Semiconductor PTE Ltd.
No. 1 Tannery Road
Cencom 1, #09-01
Singapore 1334
TEL: (65) 748-4200
FAX: (65) 748-0400

HARRIS SEMICONDUCTOR

HARRIS SEMICONDUCTOR

PRISM 2.4GHz Chip Set

Direct Sequence Spread Spectrum Wireless Transceiver Chip Set

October 1996

Features

- Provides Antenna-to-Bits™ Data Stream
- Low Voltage Operation from 2.7V to 5.5V
- 2.4GHz - 2.5GHz ISM Band Operation
- Single Heterodyne Conversion
- Programmable Antialiasing and Shaping Filters
- 10MHz to 400MHz IF Operation with RSSI
- Autonomous Half Duplex Direct Sequence Modem
- Selectable DBPSK, DQPSK Signalling
- Antenna Diversity Selection
- Direct Sequence Physical Layer (DS-PHY)
- Differential Data Encoding/Decoding
- Programmable 16-Bit PN Code
- Data Rates up to 4 MBPS DQPSK
- Power Management Control
- Low Profile PCMCIA-Compatible Surface Mount Packaging

Applications

- Systems Targeting IEEE 802.11 Standard
- PCMCIA Wireless Transceiver
- WLAN RF Modems
- TDMA Packet Protocol Radios
- Part 15 Compliant Radio Links

Description

The Harris 2.4GHz PRISM™ chip set is a highly integrated five-chip solution for RF modems employing Direct Sequence Spread Spectrum (DSSS) signaling. Significant integration of transmit and receive functions employ the following ICs: complete integrated DSSS engine, the HSP3824; a quadrature modulator/demodulator, integrated with an IF limiter amplifier with RSSI, the HFA3724; a combined LNA/Mixer and upconverter/preamplifier, the HFA3624; a high performance, low noise amplifier for increased receiver sensitivity, the HFA3424; a dual synthesizer, the HFA3524 and a monolithic RF power amplifier, the HFA3925. Each of the functions may be used individually or in any combination in support of a variety of RF modem applications.

The PRISM™ chip set is intended to support various data rates including systems targeting the proposed IEEE 802.11 standard "Direct Sequence Physical layer (DS-PHY)". Differential BPSK and QPSK signaling is employed with differential encoding and decoding of packetized data. A PN sequence rate of up to 22 MCPS is supported for up to a 16 chip PN code. Integrated programmable low pass filters are used on the HFA3724 to allow chip rates from 2.75 MCPS to 22 MCPS. A flexible general purpose data and control interface is provided for parameter configuration and for transferring data packets between the PHY and Media Access Control (MAC) layers. Data rates of up to 2 MBPS for DBPSK and 4 MBPS for DQPSK are supported.

Typical Application Diagram

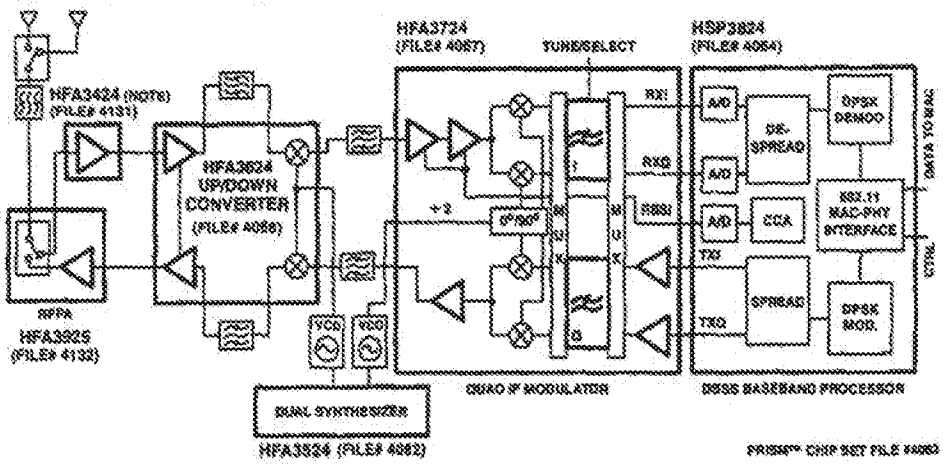

NOTE: Required for systems targeting 802.11 specifications.

PRISM™, the PRISM™ logo and Antenna-to-Bits™ are trademarks of Harris Corporation.

CAUTION: These devices are sensitive to electrostatic discharge. Users should follow proper IC Handling Procedures.

Copyright © Harris Corporation 1996

File Number 4083.4

For the high rate configuration of the PRISM™, a recommended implementation is to use SAW BPFs centered at 280MHz with a BW of about 17MHz. This is assuming an 11MHz chip rate (thus 22MHz spread null to null bandwidth). A recommended device that meets these requirements is the ToyoCom TQS-432.

If a low data rate configuration is implemented then substitute IF filters need to be identified that will filter to the channel bandwidth of the spread waveform at the lower chip rate. The designer can use any IF center frequency within the HFA3724 range. The designer must be sure, though, that the identified filter meets the transmission spectral mask requirements for FCC for the 2.4MHz ISM band. SAW filters for PCMCIA applications are not widely available at these specifications and a custom design may be required.

B. Limitations of HFA3724 LPFs

The HFA3724 includes a set of baseband low pass filters as the final filtering stage of the complex spread waveform. These are placed before the In phase (I) and Quadrature (Q) A/D converters for baseband processing. These filters are shown on Figure 1, as LPFs (Rx) and LPFs(TX). There are four cut off frequencies that can be selected for these LPFs. The cut off can be selected to be 17.6MHz (for a chip rate of 22 MCPS), 8.8MHz (for a 11 MCPS rate), 4.4MHz (for a 5.5 MCPS rate) or 2.2MHz (for a 2.75 MCPS rate). In addition these cut off frequencies are tunable through an external resistor by ±20%. The user can select one of the four discrete cut off frequencies. The lowest cut off is set for a spread rate of 2.5MHz chip rate and any chip rates lower than this will require the design of external filtering between the HFA3724 outputs and the HSP3824 A/D inputs. The HFA3724 I and Q LPFs are fifth order Butterworth filters and equivalent external filters need to be designed at the lower cut off specifications.

C. Selection of Carrier Frequency and Clock Oscillators

The HSP3824 performs the baseband demodulation function. The design includes digital signal acquisition and tracking loops for both the symbol timing clock and the carrier frequency.

The primary concern when the radio needs to be operated with a low instantaneous data rate is that it requires a wide bandwidth to accommodate oscillator frequency tolerances.

As an example at 2400MHz and ±25 PPM, the radio frequencies at each end of the link can be off by as much as 120kHz from each other. This offset must be well within the basic data bandwidth of the radio in order for it to be tolerated without degrading the performance of the link. If it is not, a frequency sweep would be needed to find the signals and this is not built into the radio design. Operating the radio with wide data bandwidth and low data rate is inefficient and would cause unacceptable loss in performance.

If the PRISM™ is used as a spread spectrum system with 11 chips per bit spreading ratio, this then gives it an IF bandwidth of nominally 22MHz null to null at 1 MSPS. We filter to 17MHz to allow closer packing of the channels. While this seems wide compared to the frequency offset, remember that this is a direct spread system. The first stage of processing the signal despreads it and collapses it to the data bandwidth. In PRISM™ this is done in a time invariant matched filter correlator. This correlator has an FIR filter structure where the PN sequence is substituted for the tap weights. The filter is operated at baseband, so the I and Q quadrature components are separately correlated with the same sequence. The outputs of the I and Q correlators are the vector components of the correlation. These will show a distinct peak in magnitude (compressed pulse) when correlation occurs. Correlation performance falls off when the signal is not stationary (i.e. has offset). . The correlator convolves a stationary signal, (the PN sequence) with the input signal. The vector correlation is being rotated throughout the correlation by the offset frequency. This means that the signal correlates at one angle at the start of a symbol and at a different angle at the end. If this angular difference is small, no great loss occurs. The net correlation goes as the vector sum of all the correlation angles between the start and the end of the symbol as shown below. Thus the magnitude falls off to zero if the offset causes a baseband phase rotation of one cycle per symbol. The magnitude is obviously maximum at no offset and falls off about 0.22dB at 45 degrees rotation. This corresponds to the 120kHz offset (~1/8th of 1 MBPS).

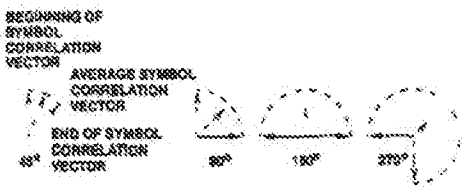

FIGURE 2. PRISM™ CORRELATION PERFORMANCE vs FREQUENCY OFFSET

Crystal oscillators of better than ±25 PPM accuracy can be purchased, but their cost goes up significantly as the tolerances are tightened. Given this offset, we must be sure that the receiver can accept the offset. At a data rate of 250 KSPS, the same offset loss occurs with a frequency offset 1/4th as large. This means that to get the same performance, we need oscillators specified to ±6 PPM. To go lower in data rate means tightening up the specification even further.

Similar consideration needs to be taken for the clocks that are used to run the baseband processor itself. The symbol timing clock tracking algorithm operates over 128 symbol integration intervals. To maintain acceptable BER performance the symbol timing phase drift must be less than 1/8th chip over the 128 symbol integration interval. Remember that we are tracking the peak of the compressed pulse which is 2 chips wide and must keep the straddling loss low by sampling close to the peak. For a 0.25 MBPS data rate, the chip rate is 2.75 MCPS. With this rate, the integration interval is 512ms which translates to an oscillator within 89PPM to keep the drift less than 1/8th chip (0.045ms). Since the spread rate to data rate ratio is not changed at the lower data rates, this tolerance is not effected by lower data rates.

High Rate Burst Transmissions With Low Average Rate

Generally, the incentive to use lower data rates is to achieve a given range with the minimum amount of power. We can show that this is also achievable by using the radio in its high data rate design configuration. The PRISM™ is a packet radio communications device and, as such, can send the data in a short burst with open environment ranges up to 5 miles. This has significant potential for power savings and reduction in interference. In the high data rate configuration the design considerations mentioned above are no longer of concern.

The system approach is to accept the 1 MBPS data rate of the radio as long as the achievable range is acceptable, and use it in a short burst mode which is consistent with its' packet nature. With a low power watch crystal, the controller can keep adequate time to operate either a polled or a time allocated scheme. In these modes, the radio is powered off most of the time and only awakens when communications is expected. This station would be awakened periodically to listen for a beacon transmission. The beacon serves to reset the timing and to alert the radio to traffic. If traffic is waiting, the radio is instructed when to listen and for how long. In a polled scheme, the remote radio can respond to the poll with its traffic if it has any. With these techniques, the average power consumption of the radio can be reduced by more than an order of magnitude while meeting all data transfer objectives.

Even using the 802.11 network protocols, the low data rate can allow low average power operation. The Media Access Controller (MAC) or network processor can operate the radio in the sleep mode except for the times it needs to receive the beacon signals.

The short, fast transmissions are good for several reasons. First, if the signal is corrupted for any reason, a retransmission will occur without noticeable delay. Secondly, interference to other spectrum users is of brief duration. Third, and most important, the burst can be sent into small time gaps in the medium, which makes it more effective against certain type of interference in the ISM band. For example, if an 802.11 FH network is operating in the vicinity, it could cause interference with this network. The FH network has, however, a brief guard time when it is hopping and none of its stations are on the air. This time can be used to transmit the burst communications packets. Additionally, the microwave oven has been identified as an interference source of concern within the 2.4GHz ISM band. The oven is a pulsed source with about a 50% duty cycle. The gaps allow messages of about 1000 bytes through at the 1 MBPS rate.

In addition, the system can be set at its sleep mode most of the time to achieve low power consumption, it only needs to operate at full power consumption during the transmission of a packet or during the expected window for received packets.

The communications range achievable depends on the nature of the environment. A line of sight (LOS) path allows the best range. With 1W and 6dB gain in the antennas, you can readily achieve a 5 mile LOS range. The propagation loss at S-band is less than 0.5dB per mile in heavy rain, so weather is not usually of great concern. Antennas with 6dB gain are for fixed installations with one on one links. Mobile and network installations use omnidirectional antennas with around 0dB gain. Indoors, the range is much reduced by extra losses due to walls and other obstructions. The power is also usually reduced to 100mW for interference and safety concerns. These reduce the available range, but most applications will achieve sufficient range (300 ft.).

Antenna diversity is also used in the PRISM™ design to combat multipath interference. Since the PRISM™ waveform is wideband by being spread at the chip rate, the 1 MBPS data rate is not a contributor to multipath problems and a lower data rate is of no benefit.

So, in general, unless it is required to use low instantaneous data rates to achieve some other purpose, the packet capabilities of PRISM™ will serve well for these applications in its normal high data rate design configuration.

intersil

A Brief Tutorial on Spread Spectrum and Packet Radio

Technical Brief | May 1996 | TB337.1

Author: Carl Andren

Introduction

PRISM

The communications standard for wireless local networks, IEEE 802.11, uses spread spectrum and packet radio techniques and these are features which are not common knowledge. The first term, spread spectrum, indicates a radio frequency modulation technique where the radio energy is spread over a much wider bandwidth than needed for the data rate. We do this to get some benefits that are not readily apparent. The easiest spread spectrum technique to explain is frequency hop (FH). In this technique, the channel being used is rapidly changed in a pseudo random pattern so that the communications appears to occupy a wide bandwidth over time. See Figure 1. This spreads the energy out so that the average power in any narrow part of the band is minimized. Of course, the transmitting and receiving radios need to synchronize their hopping patterns so that they hop together.

As an example, 802.11 specifies that we use the ISM band at 2.4GHz. The ISM band is 83MHz wide and has been subdivided into 1MHz channels for the FH specification. The FCC insists that any spread spectrum FH radio operating in this band must visit at least 75 of the channels at least once every 30 seconds. This works out to a minimum hop rate of 2.5 hops per second.

The next form of spread spectrum is called Direct Spread (DS) and this is the other form of spread spectrum allowed by the FCC in this band. With DS, the data is mixed (XOR) with a high rate pseudo random sequence before being PSK modulated onto the RF carrier. This high rate sequence can be many orders of magnitude higher in rate than the data. In the ISM band, it is limited to not less than a 10:1 spreading ratio. This high rate phase modulation spreads the spectrum out while dropping the power spectral density. This means that this kind of signal will interfere less with narrow band users. It also has some interference immunity to those narrow band emitters. The receiver processing of DS signals begins with despreading the signals. This is done by mixing the spread signal with the same PN sequence that was used for spreading. See Figure 2A. This collapses the desired signal to its original bandwidth and form. It meanwhile spreads all other signals that don't correlate with the spreading signal. Thus a narrowband interference will get spread in this operation and will not fit through the narrow data filter. See Figure 2B. When the signal energy is collapsed to the data bandwidth, its power spectral density is increased by the amount of the processing gain which is proportional to the bandwidth reduction. Thus a signal that was received at or below the noise floor, is now above the noise and can be demodulated.

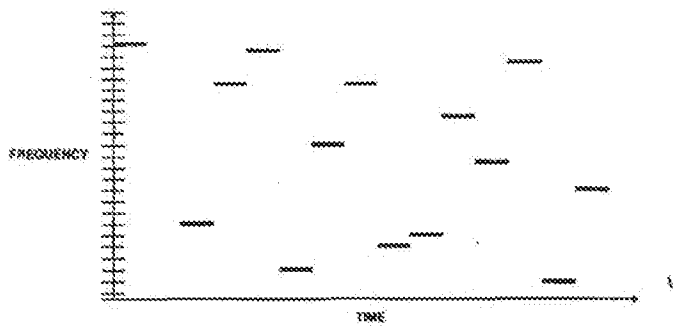

FIGURE 1. FH SPREAD SPECTRUM

1-888-INTERSIL or 321-724-7143 | Intersil and Design is a trademark of Intersil Corporation. | Copyright © Intersil Corporation, 2000
PRISM is a registered trademark of Intersil Corporation. PRISM and design is a trademark of Intersil Corporation.

Harris Semiconductor

Brief

No. TB337.1 May 1998

Harris Linear

A Brief Tutorial on Spread Spectrum and Packet Radio

Author: Carl Andren

Introduction

The new communications standard for wireless local networks, IEEE 802.11, uses spread spectrum and packet radio techniques and these are features which are not common knowledge. The first term, spread spectrum, indicates a radio frequency modulation technique where the radio energy is spread over a much wider bandwidth than needed for the data rate. We do this to get some benefits that are not readily apparent. The easiest spread spectrum technique to explain is frequency hop (FH). In this technique, the channel being used is rapidly changed in a pseudo random pattern so that the communications appears to occupy a wide bandwidth over time. See Figure 1. This spreads the energy out so that the average power in any narrow part of the band is minimized. Of course, the transmitting and receiving radios need to synchronize their hopping patterns so that they hop together.

As an example, 802.11 specifies that we use the ISM band at 2.4GHz. The ISM band is 83MHz wide and has been subdivided into 1MHz channels for the FH specification. The FCC insists that any spread spectrum FH radio operating in this band must visit at least 75 of the channels at least once every 30 seconds. This works out to a minimum hop rate of 2.5 hops per second.

The next form of spread spectrum is called Direct Spread (DS) and this is the other form of spread spectrum allowed by the FCC in this band. With DS, the data is mixed (XOR) with a high rate pseudo random sequence before being PSK modulated onto the RF carrier. This high rate sequence can be many orders of magnitude higher in rate than the data. In the ISM band, it is limited to not less than a 10:1 spreading ratio. This high rate phase modulation spreads the spectrum out while dropping the power spectral density. This means that this kind of signal will interfere less with narrow band users. It also has some interference immunity to those narrow band emitters. The receiver processing of DS signals begins with despreading the signals. This is done by mixing the spread signal with the same PN sequence that was used for spreading. See Figure 2A. This collapses the desired signal to its original bandwidth and form. It meanwhile spreads all other signals that don't correlate with the spreading signal. Thus a narrowband interference will get spread in this operation and will not fit through the narrow data filter. See Figure 2B. When the signal energy is collapsed to the data bandwidth, its power spectral density is increased by the amount of the processing gain which is proportional to the bandwidth reduction. Thus a signal that was received at or below the noise floor, is now above the noise and can be demodulated.

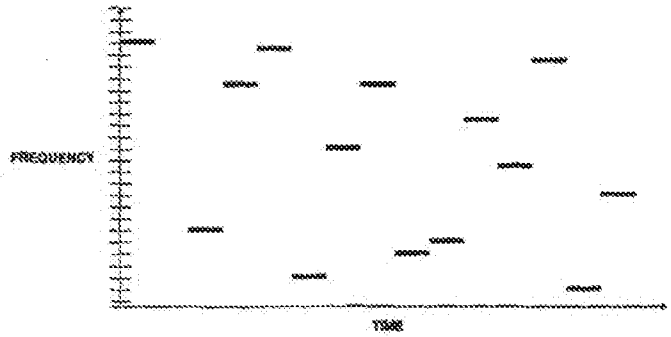

FIGURE 1. FH SPREAD SPECTRUM

Copyright © Harris Corporation 1998

PRISM™ and the PRISM™ logo are Trademarks of Harris Corporation

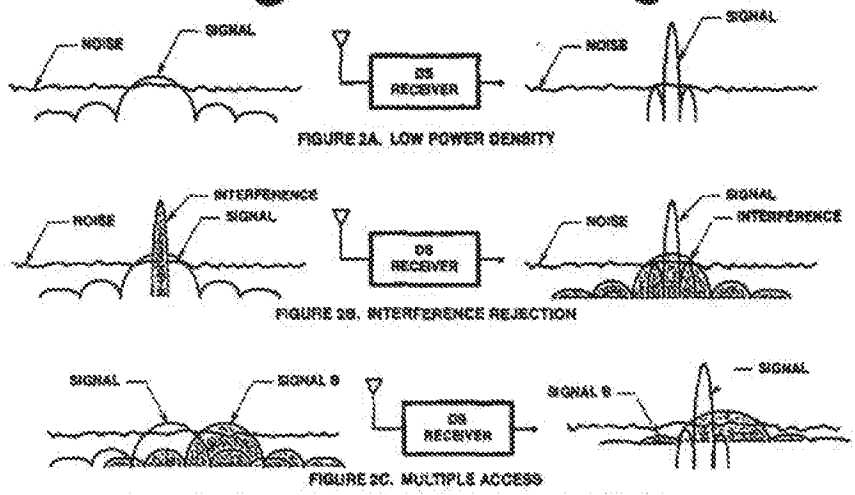

FIGURE 2A. LOW POWER DENSITY

FIGURE 2B. INTERFERENCE REJECTION

FIGURE 2C. MULTIPLE ACCESS

FIGURE 2. DIRECT SEQUENCE SPREAD SPECTRUM PROPERTIES

Finally, DS spread spectrum can allow more than one user to occupy the same channel through a feature called multiple access. Each DS receiver collapses only correlated signals to the data bandwidth. Other, non correlated signals will remain spread in this step. When the desired signal is filtered to the signal bandwidth, only a small fraction of the undesired signal remains. See Figure 2C.

The term packet radio or packet communications is common where the communications medium is not well controlled. There are numerous reasons why a radio communications link may be interrupted, such as the microwave oven. [1] The microwave oven radiates in the middle of the ISM band with a 50% duty cycle and a pulse rate locked to the power line. Thus it is off for 8ms every 16ms. These off periods allow the transmission of bursts (or packets) of 1000 bytes at a time. Frequency hopping also means that the radio communications is interrupted every 400ms while the sending and receiving radios are retuned. The breaking up of a large block of data into small "packets" is a common technique in communications to insure that error free communications can take place even with interruptions. [2] If the medium is corrupted intermittently, a large block of data will never make it through without errors. In the packet technique this block is broken into small packets that each have some error detection bits added. Then, if an error is detected, a retransmission of the small packet that was corrupted will not unduly burden the network. This packet communications technique has short control packets that check to see if the medium is clear, the other end is ready to receive and, to request a retransmission if a packet did not get through correctly. See Figure 3. All of this requires some overhead expense that reduces the net system throughput. Packet length can be optimized to minimize overhead while insuring the greatest throughput with data integrity.

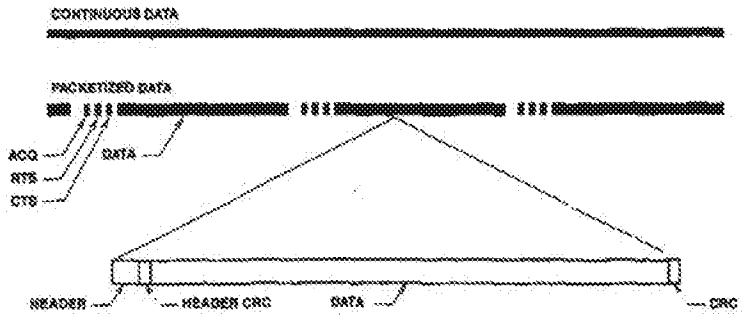

FIGURE 3. PACKET TRANSMISSION

When continuous data is packetized, the instantaneous rate must increase since the time allowed for data transmission is reduced. This allows time for the packet protocol interchange, packet headers and other overhead. Packet communications can be used with various access protocols such as carrier sense multiple access (CSMA) or time division multiple access (TDMA). CSMA allows asynchronous communications, but requires each communicator to first establish that the medium is not busy. It then establishes the link with an interchange consisting of a request to send (RTS), followed by a clear to send (CTS), the data packet and acknowledgment or not (ACK/NAK). TDMA allows synchronous communications where each user is allocated a time slot to communicate in. The network overhead in this scheme is in the wasted time when some users have nothing to send and in the packets from the controller necessary to allocate the time slots.

The combination of spread spectrum and packet communications for the 802.11 wireless local area networks allows robust communications in a crowded and noisy band.

References

[1] The 2.4GHz ISM band has been called the Junk band because it is already contaminated by oven emissions. Years ago, 2.45GHz was allocated to the microwave oven and it was felt that no one else would ever want to co-occupy this band. As pressure to allocate more spectrum to communications was felt, the FCC set up rules for unlicensed Instrumentation, Scientific and Medical (ISM) operation in this "worthless" band.

[2] Remember the days of typewriters where typing a whole page without error was a trying experience. The first word processor that allowed you to look over and correct each sentence before committing it to paper was a real breakthrough.

All Harris Semiconductor products are manufactured, assembled and tested under ISO9000 quality systems certification.

Harris Semiconductor products are sold by description only. Harris Semiconductor reserves the right to make changes in circuit design and/or specifications at any time without notice. Accordingly, the reader is cautioned to verify that data sheets are current before placing orders. Information furnished by Harris is

rights of third parties which may result from its use. No license is granted by implication or otherwise under any patent or patent rights of Harris or its subsidiaries.

Sales Office Headquarters

For general information regarding Harris Semiconductor and its products, call 1-800-4-HARRIS

NORTH AMERICA
Harris Semiconductor
P. O. Box 883, Mail Stop 53-210
Melbourne, FL 32902
TEL: 1-800-442-7747
(407) 729-4984
FAX: (407) 729-5321

EUROPE
Harris Semiconductor
Mercure Center
100, Rue de la Fusee
1130 Brussels, Belgium
TEL: (32) 2.724.2111
FAX: (32) 2.724.22.05

ASIA
Harris Semiconductor PTE Ltd.
No. 1 Tannery Road
Cencon 1, #09-01
Singapore 1334
TEL: (65) 748-4200
FAX: (65) 748-0400

HARRIS SEMICONDUCTOR

UNITED STATES DEPARTMENT OF COMMERCE
Patent and Trademark Office
Address: COMMISSIONER OF PATENTS AND TRADEMARKS
Washington, D.C. 20231

APPLICATION NUMBER	FILING/RECEIPT DATE	FIRST NAMED APPLICANT	ATTORNEY DOCKET NO./TITLE
08/819,846	03/17/97	SNELL J	SE-1301-WR/H

0242/0716

NOT ASSIGNED

CHRLISTOPHER F. REGAN
ALLEN DYER DOPPELT MILBRATH & GILCHRIST
255 S. ORANGE AVENUE, SUITE 1401
P. O. BOX 3791
ORLANDO FL 32802

2611

DATE MAILED: 07/16/97

NOTICE TO FILE MISSING PARTS OF APPLICATION
Filing Date Granted

An Application Number and Filing Date have been assigned to this application. However, the items indicated below are missing. The required items and fees identified below must be timely submitted ALONG WITH THE PAYMENT OF A SURCHARGE for items 1 and 3-6 only of $ 130 for a ☒ large entity ☐ small entity in compliance with 37 CFR 1.27. The surcharge is set forth in 37 CFR 1.16(e). Applicant is given TWO MONTHS FROM THE DATE OF THIS NOTICE within which to file all required items and pay any fees required above to avoid abandonment. Extensions of time may be obtained by filing a petition accompanied by the extension fee under the provisions of 37 CFR 1.136(a).

If all required items on this form are filed within the period set above, the total amount owed by applicant as a ☐ large entity ☐ small entity (verified statement filed), is $ 2,122.00

☒ 1. The statutory basic filing fee is:
- ☒ missing.
- ☐ insufficient.

Applicant must submit $ 710.00 to complete the basic filing fee and/or file a verified small entity statement claiming such status (37 CFR 1.27).

☒ 2. Additional claim fees of $ 1,222.00, including any multiple dependent claim fees, are required.
Applicant must either submit the additional claim fees or cancel additional claims for which fees are due.

☒ 3. The oath or declaration:
- ☒ is missing.
- ☐ does not cover the newly submitted items.
- ☐ does not identify the application to which it applies.
- ☐ does not include the city and state or foreign country of applicant's residence.

An oath or declaration in compliance with 37 CFR 1. 63, including residence information and identifying the application by the above Application Number and Filing Date is required.

☐ 4. The signature(s) to the oath or declaration is/are:
- ☐ missing.
- ☐ by a person other than inventor or person qualified under 37 CFR 1.42, 1.43, or 1.47.

A properly signed oath or declaration in compliance with 37 CFR 1.63, identifying the application by the above Application Number and Filing Date, is required.

☐ 5. The signature of the following joint inventor(s) is missing from the oath or declaration:

_____

An oath or declaration listing the names of all inventors and signed by the omitted inventor(s), identifying this application by the above Application Number and Filing Date, is required.

☐ 6. A $_____ processing fee is required since your check was returned without payment (37 CFR 1.21(m)).

☐ 7. Your filing receipt was mailed in error because your check was returned without payment.

☐ 8. The application does not comply with the Sequence Rules.
See attached "Notice to Comply with Sequence Rules 37 CFR 1.821-1.825."

☐ 9. OTHER:

Direct the response and any questions about this notice to "Attention: Box Missing Parts."

A copy of this notice MUST be returned with the response.

M. Gouldden
Customer Service Center
Initial Patent Examination Division (703) 308-1202

FORM PTO-1533 (REV.7-96) PART 1 - ATTORNEY/APPLICANT COPY U.S. GPO: 1996-405-495/40515

#030

OIPE 70579 SEP 1 MAIL DATE CANCELLED PATENT & TRADEMARK OFFICE

IN THE UNITED STATES PATENT AND TRADEMARK OFFICE

In re Patent Application of:
JAMES LEROY SNELL

Serial No. 08/819,846

Filed: March 17, 1997

Art Unit: 2611

OIPE 70579 SEP 19 1997 PATENT & TRADEMARK OFFICE

For: HIGH DATA RATE SPREAD SPECTRUM TRANSCEIVER AND ASSOCIATED METHODS

RESPONSE TO NOTICE TO FILE MISSING PARTS

Hon. Commissioner of Patents and Trademarks
Washington, D.C. 20231

Sir:

Responsive to the Notice to File Missing Parts mailed July 16, 1997, Applicant encloses the following:

1) Filing fee of $1512.00 for a large entity.
2) Surcharge of $130.00 for large entity.
3) Declaration and Power of Attorney.
4) Assignment to Harris Corporation, together with $40 recordal fee and cover page.
5) Copy of "Notice to File Missing Parts of Application--Filing Date Granted" mailed July 16, 1997.

Authorization is given to charge $2082.00 (filing fee, surcharge and assignment recordal fee) to the Harris Corporation Deposit Account No. 08-0870. If any additional extension and/or fee is required, or if any additional fee for claims is required, charge Account No. 08-0870.

Christopher B. Regan
Reg. No. 34,906
Allen, Dyer & Doppelt, Milbrath & Gilchrist, P.A.
255 S. Orange Avenue
Suite 1401
Post Office Box 3791
Orlando, Florida 32802
407/841-2330

In re Patent Application of
JAMES LEROY SNELL
Serial No. 08/819,846
Filed March 17, 1997

CERTIFICATE OF MAILING

I hereby certify that this RESPONSE TO NOTICE TO FILE MISSING PARTS for Serial No. 08/819,846 is being deposited with the United States Postal Service as First Class Mail in an envelope addressed to: COMMISSIONER OF PATENT AND TRADEMARKS, WASHINGTON, D.C., on this 15th day of September, 1997.

Barbara Lowe

OIPE 70579 SEP 19 1997 PATENT & TRADEMARK OFFICE

OIPE 70579 SEP 19 1997 PATENT & TRADEMARK OFFICE

MEDATE CANCELLED

DECLARATION AND POWER OF ATTORNEY FOR PATENT APPLICATION

Attorney Docket No.: SR-1301-WP/H6388 (18328)

As a below named inventor, I hereby declare that:

My residence, post office address and citizenship are as stated below next to my name,

I believe I am the original, first and sole inventor (if only one name is listed below) or an original, first and joint inventor (if plural names are listed below) of the subject matter which is claimed and for which a patent is sought on the invention entitled: HIGH DATA RATE SPREAD SPECTRUM TRANSCEIVER AND ASSOCIATED METHODS, the specification of which:

(check one)
_____ is attached hereto

__X__ was filed on March 17, 1997

as Application Serial No. 08/819,846

and was amended on _____
(if applicable)

I hereby state that I have reviewed and understand the contents of the above-identified specification, including the claims, as amended by any amendment referred to above.

I acknowledge the duty to disclose information which is material to the examination of this application in accordance with Title 37, Code of Federal Regulation, 1.56(a).

I hereby claim foreign priority benefits under Title 35, United States Code, 119 of any foreign application(s) for patent or inventor's certificate listed below and have also identified below any foreign application for patent or inventor's certificate having a filing date before that of the of the application on which priority is claimed:

Prior Foreign Application(s) Priority Claimed

(Number)	(Country)	(Day/Month/Year Filed)	[ ] Yes	[ ] No
(Number)	(Country)	(Day/Month/Year Filed)	[ ] Yes	[ ] No
(Number)	(Country)	(Day/Month/Year Filed)	[ ] Yes	[ ] No

I hereby claim the benefit under Title 35, United States Code, 120, of any United States application(s) listed below and, insofar as the subject matter of each of the claims of this application is not disclosed in the prior United States application in the manner provided by the first paragraph of Title 35, United States Code, 112, I acknowledge the duty to disclose material information as defined in Title 37, Code of Federal Regulations, 1.56(a) which occurred between the filing date of the prior application and the national or PCT international filing date of this application:

(Appln Serial No.) (patented, pending, aban.)	(Filing Date)	(Status)
(Appln Serial No.) (patented, pending, aban.)	(Filing Date)	(Status)

I hereby declare that all statements made herein of my own knowledge are true and that all statements made on information and belief are believed to be true; and further that these statements were made with the knowledge that willful false statements and the like so made are punishable by fine or imprisonment, or both, under Section 1001 of Title 18 of the United States Code and that such willful false statements may jeopardize the validity of the application or any patent issued thereon.

Rembrandt Wireless
Ex. 2012
Apple Inc. v. Rembrandt Wireless Technologies, LP, IPR2020-00033
Page 727

English Language Declaration

POWER OF ATTORNEY: As a named inventor, I hereby appoint the following attorneys to prosecute this application and transact all business in the Patent and Trademark Office connected therewith: Christopher F. Regan, Reg. No. 34,906; Herbert L. Allen, Reg. No. 35,322; David L. Sigalow, Reg. No. 36,006; Jeffrey S. Whittle, Reg. No. 36,382; Carl M. Napolitano, Reg. No. 37,405; Jacqualine E. Hartt, Reg. No. 37,845; Leslie J. Hart, Reg. No. 36,463; Harry M. Fleck, Reg. No. 24,704; John L. DeAngelis, Reg. No. 30,622; Ferdinand Romano, Reg. No. 32,752; Joel I. Rosenblatt, Reg. No. 26,025; Daniel J. Staudt, 34,733; Frederick R. Jorgenson, 38,196; Harry L. Deffebach, III, 37,604; Dennis L. Cook, Reg. No. 30,826; and Bidyut K. Niyogi, Reg. No. 27,071.

Send Correspondence to:

CHRISTOPHER F. REGAN, ESQUIRE
ALLEN, DYER, DOPPELT, MILBRATH & GILCHRIST, P.A.
P.O. Box 3791
Orlando, Florida 32802-3791

Direct Telephone Calls to:

Christopher F. Regan
(407) 841-3330

Full name of (first) inventor: JAMES LEROY SNELL

Inventor's Signature: James Leroy Snell Date: 8/11/97

Residence: Palm Bay, Florida

Citizenship: Citizen of United States

Post Office Address: 2695 Lemon Street NE
Palm Bay, FL 32905

OIPE 70579 SEP 19 1997 PATENT & TRADEMARK OFFICE

OIPE 70579 SEP 19 1997 PATENT & TRADEMARK OFFICE

#3

DECLARATION AND POWER OF ATTORNEY FOR PATENT APPLICATION

Attorney Docket No.: SE-1301-WP/H6380 (18328)

As a below named inventor, I hereby declare that:

My residence, post office address and citizenship are as stated below next to my name,

I believe I am the original, first and sole inventor (if only one name is listed below) or an original, first and joint inventor (if plural names are listed below) of the subject matter which is claimed and for which a patent is sought on the invention entitled: HIGH DATA RATE SPREAD SPECTRUM TRANSCEIVER AND ASSOCIATED METHODS, the specification of which:

(check one)

_____ is attached hereto

X was filed on March 17, 1997

as Application Serial No. 08/819,846

and was amended on _____ (if applicable)

I hereby state that I have reviewed and understand the contents of the above-identified specification, including the claims, as amended by any amendment referred to above.

I acknowledge the duty to disclose information which is material to the examination of this application in accordance with Title 37, Code of Federal Regulation, 1.56(a).

I hereby claim foreign priority benefits under Title 35, United States Code, 119 of any foreign application(s) for patent or inventor's certificate listed below and have also identified below any foreign application for patent or inventor's certificate having a filing date before that of the of the application on which priority is claimed:

08819846.031797

Rembrandt Wireless
Ex. 2012
Apple Inc. v. Rembrandt Wireless Technologies, LP, IPR2020-00033
Page 729

Prior Foreign Application(s) Priority Claimed

(Number)	(Country)	(Day/Month/Year Filed)	[ ] Yes	[ ] No
(Number)	(Country)	(Day/Month/Year Filed)	[ ] Yes	[ ] No
(Number)	(Country)	(Day/Month/Year Filed)	[ ] Yes	[ ] No

I hereby claim the benefit under Title 35, United States Code, 120, of any United States application(s) listed below and, insofar as the subject matter of each of the claims of this application is not disclosed in the prior United States application in the manner provided by the first paragraph of Title 35, United States Code, 113, I acknowledge the duty to disclose material information as defined in Title 37, Code of Federal Regulations, 1.56(a) which occurred between the filing date of the prior application and the national or PCT international filing date of this application:

(Appln Serial No.) (patented, pending, aban.)	(Filing Date)	(Status)
(Appln Serial No.) (patented, pending, aban.)	(Filing Date)	(Status)

I hereby declare that all statements made herein of my own knowledge are true and that all statements made on information and belief are believed to be true; and further that these statements were made with the knowledge that willful false statements and the like so made are punishable by fine or imprisonment, or both, under Section 1001 of Title 18 of the United States Code and that such willful false statements may jeopardize the validity of the application or any patent issued thereon.

English Language Declaration

POWER OF ATTORNEY: As a named inventor, I hereby appoint the following attorneys to prosecute this application and transact all business in the Patent and Trademark Office connected therewith: Christopher F. Regan, Reg. No. 34,305; Herbert L. Allen, Reg. No. 25,322; David L. Sigalow, Reg. No. 36,006; Jeffrey S. Whittle, Reg. No. 36,382; Carl M. Napolitano, Reg. No. 37,405; Jacqueline E. Hartt, Reg. No. 37,845; Leslie J. Hart, Reg. No. 26,482; Harry M. Fleck, Reg. No. 24,704; John L. DeAngelis, Reg. No. 30,622; Ferdinand Romano, Reg. No. 32,752; Joel I. Rosenblatt, Reg. NO. 26,035; Daniel J. Staudt, 34,733; Frederick R. Jorgenson, 38,196; Harry L. Deffebach, III, 37,604; Dennis L. Cook, Reg. No. 30,826; and Bidyut K. Niyogi, Reg. No. 27,071.

Send Correspondence to:

CHRISTOPHER F. REGAN, ESQUIRE
ALLEN, DYER, DOPPELT, MILBRATH & GILCHRIST, P.A.
P.O. Box 3791
Orlando, Florida 32802-3791

Direct Telephone Calls to:

Christopher F. Regan
(407) 841-2330

Full name of (first) inventor: JAMES LEROY SNELL

Inventor's Signature: James Leroy Snell Date: 8/4/97

Residence: Palm Bay, Florida

Citizenship: Citizen of United States

Post Office Address: 2695 Lemon Street NE
Palm Bay, FL 32905

Application Assignment Record

According to the application transmittal letter, an assignment recording ownership was filed with this application; however, a copy of this record was not located in the original file history record obtained from the United States Patent and Trademark Office. Upon your request, we will attempt to obtain the assignment documents from the Assignment Recordation Branch of of the United States Patent and Trademark Office or from a related application case (if applicable). Please note that additional charges will apply for this service.

This page is not part of the official USPTO record. It has been determined that content
[illegible]

BEST COPY

OIPE 70579 DATE CANCELLED

UNITED STATES DEPARTMENT OF COMMERCE
Patent and Trademark Office
Address: COMMISSIONER OF PATENTS AND TRADEMARKS
Washington, D.C. 20231

APPLICATION NUMBER	FILING/RECEIPT DATE	FIRST NAMED APPLICANT	ATTORNEY DOCKET NO./TITLE
08/821,[illegible]6	03/17/97	SNELL	J SE-1301-WR/H

OIPE 70579 SEP 19 1997 PATENT & TRADEMARK OFFICE

0242/0[illegible]16 NOT ASSIGNED

CHRLISTOPHER F. REGAN
ALLEN DYER DOPPELT MILBRATH & GILCHRIST
255 S. ORANGE AVENUE, SUITE 1401
P. O. BOX 3791
ORLANDO FL 32802

2611

DATE MAILED: 07/16/97

DAT

NOTICE TO FILE MISSING PARTS OF APPLICATION
Filing Date Granted

An Application Number and Filing Date have been assigned to this application. However, the items indicated below are missing. The required items and fees identified below must be timely submitted ALONG WITH THE PAYMENT OF A SURCHARGE for items 1 and 3-6 only of $ 130 for a ☐ large entity ☐ small entity in compliance with 37 CFR 1.27. The surcharge is set forth in 37 CFR 1.16(e). Applicant is given TWO MONTHS FROM THE DATE OF THIS NOTICE within which to file all required items and pay any fees required above to avoid abandonment. Extensions of time may be obtained by filing a petition accompanied by the extension fee under the provisions of 37 CFR 1.136(a).

If all required items on this form are filed within the period set above, the total amount owed by applicant as a ☐ large entity ☐ small entity (verified statement filed), is $ 2,122.00

☒ 1. The statutory basic filing fee is:
- ☒ missing.
- ☐ insufficient.

Applicant must submit $ 770.00 to complete the basic filing fee and/or file a verified small entity statement claiming such status (37 CFR 1.27).

☒ 2. Additional claim fees of $ 1,222.00, including any multiple dependent claim fees, are required.
Applicant must either submit the additional claim fees or cancel additional claims for which fees are due.

☒ 3. The oath or declaration:
- ☒ is missing.
- ☐ does not cover the newly submitted items.
- ☐ does not identify the application to which it applies.
- ☐ does not include the city and state or foreign country of applicant's residence.

An oath or declaration in compliance with 37 CFR 1. 63, including residence information and identifying the application by the above Application Number and Filing Date is required.

☐ 4. The signature(s) to the oath or declaration is/are:
- ☐ missing.
- ☐ by a person other than inventor or person qualified under 37 CFR 1.42, 1.43, or 1.47.

A properly signed oath or declaration in compliance with 37 CFR 1.63, identifying the application by the above Application Number and Filing Date, is required.

☐ 5. The signature of the following joint inventor(s) is missing from the oath or declaration:

_____

An oath or declaration listing the names of all inventors and signed by the omitted inventor(s), identifying this application by the above Application Number and Filing Date, is required.

☐ 6. A $_____ processing fee is required since your check was returned without payment (37 CFR 1.21(m)).

☐ 7. Your filing receipt was mailed in error because your check was returned without payment.

☐ 8. The application does not comply with the Sequence Rules.
See attached "Notice to Comply with Sequence Rules 37 CFR 1.821-1.825."

☐ 9. OTHER:

Direct the response and any questions about this notice to "Attention: Box Missing Parts."

A copy of this notice MUST be returned with the response.

Customer Service Center
Initial Patent Examination Division (703) 308-1202

FORM PTO-1533 (REV.7-96) PART 2 - COPY TO BE RETURNED WITH RESPONSE

In re Patent Application of
SNELL
Serial No. 08/819,846
Filed March 17, 1997

OIPE
DEC 12 1997
PATENT & TRADEMARK OFFICE

CERTIFICATE OF MAILING

I HEREBY CERTIFY that this REQUEST FOR CORRECTION TO THE FILING RECEIPT for U.S. Serial No. 08/819,846 is being deposited with the United States Postal Service as First Class Mail in an envelope addressed to: COMMISSIONER OF PATENTS AND TRADEMARKS, WASHINGTON, D.C. 20231, this 9th day of December, 1997.

Mich L Bowie

OIPE
MAR 12 1998
PATENT & TRADEMARK OFFICE

Receipt

IN THE UNITED STATES PATENT AND TRADEMARK OFFICE

In re Patent Application of:
SNELL

Serial No. 08/819,846

Filing Date: March 13, 1997

For: HIGH DATA RATE SPREAD SPECTRUM TRANSCEIVER AND ASSOCIATED METHODS

RECEIVED
MAR 05 1998
GROUP 3500

REQUEST FOR CORRECTION TO THE FILING RECEIPT

RECEIVED
MAR 11 1998
GROUP 2200

Hon. Commissioner of Patents and Trademarks
Washington, D.C. 20231

Sir:

The filing receipt for the subject patent application has been received and reviewed for accuracy. Two discrepancies have been discovered. The filing receipt fails to include the residence of the applicant, James Leroy Snell, as Palm Bay, FL. Furthermore, the filing receipt misspells the word "spectrum" in the title of the application. The correct spelling of the title should be indicated as follows:

HIGH DATA RATE SPREAD SPECTRUM TRANSCEIVER AND ASSOCIATED METHODS

It is respectfully requested that a corrected filing receipt be issued in this application.

Respectfully submitted,

Christopher F. Regan
Reg. No. 34,906
Allen, Dyer, Doppelt, Milbrath & Gilchrist, P.A.
255 S. Orange Avenue, Suite 1401
Post Office Box 3791
Orlando, Florida 32802
407/841-2330
Attorney for Applicant

PTO-103X
(Rev. 8-95)

FILING RECEIPT

UNITED STATES DEPARTMENT OF COMMERCE
Patent and Trademark Office
ASSISTANT SECRETARY AND COMMISSIONER
OF PATENTS AND TRADEMARKS
Washington, D.C. 20231

APPLICATION NUMBER	FILING DATE	GRP ART UNIT	FIL FEE REC'D	ATTORNEY DOCKET NO.	DRWGS	TOT CL	IND CL
08/819,846	03/17/97	2611	$0.00	SE-1301-WR/H	8	61	7

CHRLISTOPHER F. REGAN
ALLEN DYER DOPPELT MILBRATH & GILCHRIST
255 S. ORANGE AVENUE, SUITE 1401
P. O. BOX 3791
ORLANDO FL 32802

OIPE
MAR 17 1997
PATENT & TRADEMARK OFFICE

Receipt is acknowledged of this nonprovisional Patent Application. It will be considered in its order and you will be notified as to the results of the examination. Be sure to provide the U.S. APPLICATION NUMBER, FILING DATE, NAME OF APPLICANT, and TITLE OF INVENTION when inquiring about this application. Fees transmitted by check or draft are subject to collection. Please verify the accuracy of the data presented on this receipt. If an error is noted on this Filing Receipt, please write to the Application Processing Division's Customer Correction Branch within 10 days of receipt. Please provide a copy of the Filing Receipt with the changes noted thereon.

Applicant(s)
JAMES LEROY SNELL, , .

TITLE
HIGH DATA RATE SPREAD SPECATRUM TRANSCEIVER AND ASSOCIATED METHODS

PRELIMINARY CLASS: 455

(see reverse)

UNITED STATES DEPARTMENT OF COMMERCE
Patent and Trademark Office
Address: COMMISSIONER OF PATENTS AND TRADEMARKS
Washington, D.C. 20231

V.O

APPLICATION NO.	FILING DATE	FIRST NAMED INVENTOR	ATTORNEY DOCKET NO.
08/819,842	03/17/97	SNELL J	SE-1301-WR/H

LM01/1110

CHRLISTOPHER F. REGAN
ALLEN DYER DOPPELT MILBRATH & GILCHRIST
255 S. ORANGE AVENUE, SUITE 1401
P. O. BOX 3791
ORLANDO FL 32802

EXAMINER
SHAYOUN, M

ART UNIT	PAPER NUMBER
2734	6

DATE MAILED: 11/10/99

Please find below and/or attached an Office communication concerning this application or proceeding.

Commissioner of Patents and Trademarks

PTO-90C (Rev. 3/95) 1- File Copy

Office Action Summary	Application No. 08/819,848	Applicant(s) James L. Snell
	Examiner Mohammad Ghayour	Group Art Unit 2734

☒ Responsive to communication(s) filed on Mar 17, 1997

☐ This action is FINAL.

☐ Since this application is in condition for allowance except for formal matters, prosecution as to the merits is closed in accordance with the practice under *Ex parte Quayle*, 1935 C.D. 11; 453 O.G. 213.

A shortened statutory period for response to this action is set to expire 2 month(s), or thirty days, whichever is longer, from the mailing date of this communication. Failure to respond within the period for response will cause the application to become abandoned. (35 U.S.C. § 133). Extensions of time may be obtained under the provisions of 37 CFR 1.136(a).

Disposition of Claims

☒ Claim(s) 1-61 is/are pending in the application.

Of the above, claim(s) _____ is/are withdrawn from consideration.

☐ Claim(s) _____ is/are allowed.

☒ Claim(s) 1-61 is/are rejected.

☐ Claim(s) _____ is/are objected to.

☐ Claims _____ are subject to restriction or election requirement.

Application Papers

☐ See the attached Notice of Draftsperson's Patent Drawing Review, PTO-948.

☐ The drawing(s) filed on _____ is/are objected to by the Examiner.

☐ The proposed drawing correction, filed on _____ is ☐approved ☐disapproved.

☒ The specification is objected to by the Examiner.

☐ The oath or declaration is objected to by the Examiner.

Priority under 35 U.S.C. § 119

☐ Acknowledgement is made of a claim for foreign priority under 35 U.S.C. § 119(a)-(d).

☐ All ☐ Some* ☐ None of the CERTIFIED copies of the priority documents have been

☐ received.

☐ received in Application No. (Series Code/Serial Number) _____.

☐ received in this national stage application from the International Bureau (PCT Rule 17.2(a)).

*Certified copies not received: _____.

☐ Acknowledgement is made of a claim for domestic priority under 35 U.S.C. § 119(e).

Attachment(s)

☒ Notice of References Cited, PTO-892

☒ Information Disclosure Statement(s), PTO-1449, Paper No(s). 4

☐ Interview Summary, PTO-413

☐ Notice of Draftsperson's Patent Drawing Review, PTO-948

☐ Notice of Informal Patent Application, PTO-152

— SEE OFFICE ACTION ON THE FOLLOWING PAGES —

DETAILED ACTION

Information Disclosure Statement

1. The information disclosure statement submitted on 3/17/97 has been considered and made of record by the examiner.

Drawings

2. This application has been filed with informal drawings which are acceptable for examination purposes only. Formal drawings will be required when the application is allowed.

Specification

3. The following is a quotation of the first paragraph of 35 U.S.C. 112:

> The specification shall contain a written description of the invention, and of the manner and process of making and using it, in such full, clear, concise, and exact terms as to enable any person skilled in the art to which it pertains, or with which it is most nearly connected, to make and use the same and shall set forth the best mode contemplated by the inventor of carrying out his invention.

The following is a quotation of 37 CFR 1.71(a)-(c):

> (a) The specification must include a written description of the invention or discovery and of the manner and process of making and using the same, and is required to be in such full, clear, concise, and exact terms as to enable any person skilled in the art or science to which the invention or discovery appertains, or with which it is most nearly connected, to make and use the same.
>
> (b) The specification must set forth the precise invention for which a patent is solicited, in such manner as to distinguish it from other inventions and from what is old. It must describe completely a specific embodiment of the process, machine, manufacture, composition of matter or improvement invented, and must explain the mode of operation or principle whenever applicable. The best mode contemplated by the inventor of carrying out his invention must be set forth.

> © In the case of an improvement, the specification must particularly point out the part or parts of the process, machine, manufacture, or composition of matter to which the improvement relates, and the description should be confined to the specific improvement and to such parts as necessarily cooperate with it or as may be necessary to a complete understanding or description of it.

The specification is objected to under 35 U.S.C. 112, first paragraph, because it fails to adequately describe as how modified Walsh codes or orthogonal codes reduce average DC signal components; since, this limitation is one of the central issues/unique features of the claimed invention.

Claim Rejections - 35 USC § 112

4. The following is a quotation of the first paragraph of 35 U.S.C. 112:

> The specification shall contain a written description of the invention, and of the manner and process of making and using it, in such full, clear, concise, and exact terms as to enable any person skilled in the art to which it pertains, or with which it is most nearly connected, to make and use the same and shall set forth the best mode contemplated by the inventor of carrying out his invention.

5. Claims 1-61 rejected under 35 U.S.C. 112, first paragraph, as containing subject matter which was not described in the specification in such a way as to enable one skilled in the art to which it pertains, or with which it is most nearly connected, to make and/or use the invention. There is not adequate description, in the disclosure, as how modified Walsh code or orthogonal codes reduce average DC signal component as is claimed.

6. Any inquiry concerning this communication or earlier communications from the examiner should be directed to Mohammad Ghayour whose telephone number is (703) 306-3034. The examiner can normally be reached on Monday-Thursday from 8.30AM to 4.30PM.

If attempts to reach the examiner by telephone are unsuccessful, the examiner's supervisor, Stephen Chin, can be reached on (703) 305-4714. The fax phone number for this group is (703) 308-5403.

Any inquiry of general nature or relating to the status of this application should be directed to the receptionist whose telephone number is (703) 305-4700.

Any response to this action should be mailed to:

Commissioner of Patents and Trademarks

Washington, D.C. 20231

or faxed to:

(703) 308-9051, (for formal communications intended for entry)

Or:

(703) 308-5403, (for informal or draft communications, please label "PROPOSED" or "DRAFT")

Hand-delivered responses should be brought to Crystal Park II, 2121 Crystal Drive, Arlington, VA., Sixth Floor (Receptionist).

Mohammad Ghayour

Patent Examiner

STEPHEN CHIN
SUPERVISORY PATENT EXAMINER
GROUP 2700

Notice of References Cited	Application No. 08/818,846	Applicant(s) James L. Snell	
	Examiner Mohammed Ghayour	Group Art Unit 2734	Page 1 of 1

U.S. PATENT DOCUMENTS

		DOCUMENT NO.	DATE	NAME	CLASS	SUBCLASS
	A	5,790,534	8/4/98	Kokko et al.	370	335
	B	5,882,404	10/28/97	Miller	375	222
	C	5,659,573	8/19/97	Bruckert et al.	375	200
	D	5,621,752	4/15/97	Antonio et al.	375	200
	E	5,598,154	1/28/97	Wilson et al.	341	60
	F	5,487,395	3/5/96	Jeu	375	208
	G	5,367,518	11/22/94	Miller	370	18
	H	5,309,474	5/3/94	Gilhousen et al.	375	1
	I	5,103,459	4/7/92	Gilhousen et al.	375	1
	J					
	K					
	L					
	M					

FOREIGN PATENT DOCUMENTS

		DOCUMENT NO.	DATE	COUNTRY	NAME	CLASS	SUBCLASS
	N						
	O						
	P						
	Q						
	R						
	S						
	T						

NON-PATENT DOCUMENTS

		DOCUMENT (Including Author, Title, Source, and Pertinent Pages)	DATE
	U		
	V		
	W		
	X		

U. S. Patent and Trademark Office
PTO-892 (Rev. 9-95) Notice of References Cited Part of Paper No. 1

OIPE
APR 19 1999
PATENT & TRADEMARK OFFICE

#9 Recd w/ att. 4/23/99

IN THE UNITED STATES PATENT AND TRADEMARK OFFICE

In re Patent Application of: SNELL	Examiner: M. Ghayour
Serial No. 08/819,846	
Filed: March 17, 1997	Art Unit: 2734
For: HIGH DATA RATE SPREAD SPECTRUM TRANSCEIVER AND ASSOCIATED METHODS	

RECEIVED
APR 23 1999
Group 2700

AMENDMENT

Assistant Commissioner for Patents
Washington, D.C. 20231

Sir:

Responsive to the Office Action mailed November 10, 1998, please consider the following remarks.

REMARKS

The Examiner has initially objected to the specification under 35 U.S.C. §112 because the Examiner states that the specification does not describe how modified Walsh codes or orthogonal codes reduce average DC signal components.

The Examiner is referred to the specification, starting at page 10 in the second full paragraph, where the scrambling and encoding from four bit nibbles to eight chip modified Walsh functions is described. The demodulator includes a modified Walsh correlator and associated chip tracking, carrier tracking and reformatting devices. The bits are scrambled and encoded from four bit nibbles to eight chip modified Walsh functions independently on each I and Q rail. There are eight information bits per symbol mapped to modified

Walsh functions. This mapping results in bi-orthogonal codes which have better BER performance than QPSK alone. The resulting two 11 M chip/s data streams are QPSK modulated.

The theoretical BER performance of this type of modulation is approximately 10^{-5} at an Eb/No of 8 dB versus 9.6 dB for plain BPSK or QPSK. This coding gain is due to the bi-orthogonal coding.

Page 10 describes how the magnitude part of the SIPO output points to one of the modified Walsh sequences as shown in the table. Later at line 30, the modified Walsh code may be generated by modulo 2 adding a fixed hexadecimal code to the basic or standard Walsh codes to reduce the average DC signal component. Beginning on page 13 in the last paragraph and continuing onto page 14, and the second full paragraph, the Walsh correlators are then described. It is evident that this magnitude of IW0 to IW7 is selected by the largest magnitude circuit 81a to form ISYM and formatted in sign-magnitude. It is evident throughout the specification that the modified Walsh code function correlator uses the modified Walsh code and reduces the signal component (which naturally is the average DC signal component), and works in combination with the AC-coupling to the A/D converter and enhances the performance, as taught in the specification.

For purposes of clarity, a separate application note that was written by a systems engineer at the assignee of the present invention (Harris Semiconductor) is submitted and shows the performance of the circuit such as in Figure 5 and associated text. Naturally, the DC signal component is reduced.

Rembrandt Wireless
Ex. 2012
Apple Inc. v. Rembrandt Wireless Technologies, LP, IPR2020-00033
Page 745

In re Patent Application of
LAMOUREUX
Serial No. 08/654,819
Filing Date: 05/24/96

If the Examiner has any questions, the undersigned attorney would appreciate a telephone call to discuss the application in greater detail.

Respectfully submitted,

RICHARD K. WARTHER
Reg. No. 32,160
Allen, Dyer & Doppelt, Milbrath & Gilchrist, P.A.
255 S. Orange Avenue, Suite 1401
Post Office Box 3791
Orlando, Florida 32802
407/841-2330

CERTIFICATE OF MAILING

I hereby certify that this correspondence is being deposited with the United States Postal Service as first class mail in an envelope addressed to: ASSISTANT COMMISSIONER FOR PATENTS, WASHINGTON, D.C. 20231, on this 9th day of April, 1999.

Julie Lalan

Rembrandt Wireless
Ex. 2012
Apple Inc. v. Rembrandt Wireless Technologies, LP, IPR2020-00033
Page 746

C.I.P.E. APR 19 1999 PATENT & TRADEMARK OFFICE

OIPE JC88 APR 19 1999 PATENT & TRADEMARK OFFICE

GAU 2734

IN THE UNITED STATES PATENT AND TRADEMARK OFFICE

In re Patent Application of: SNELL	Examiner: M. Ghayour
Serial No. 08/819,846	
Filed: March 17, 1997	Art Unit: 2734
For: HIGH DATA RATE SPREAD SPECTRUM TRANSCEIVER AND ASSOCIATED METHODS	

RECEIVED
APR 23 1999
Group 2700

REQUEST FOR EXTENSION OF TIME

Assistant Commissioner for Patents
Washington, D.C. 20231

Sir:

Applicant in the above-referenced application respectfully requests a two-month time extension for filing the response to the Official Action mailed November 10, 1998. The extension fee in the amount of $380.00 is enclosed. If any additional extension and/or fee is required, or if any additional fee for claims is required, charge Account No. 01-0484.

04/21/1999 SSMOHAMM 00000032 08819846
01 FC:116 380.00 OP

Respectfully submitted,

RICHARD K. WARTHEN
Reg. No. 32,180
Allen, Dyer, Doppelt, Milbrath and Gilchrist, P.A.
255 S. Orange Avenue, Suite 1401
Post Office Box 3791
Orlando, Florida 32802-3791
Telephone: 407/841-2330
Fax: 407/841-2343
Attorney for Applicant

In re Patent Application of:
SNELL
Serial No. 08/819,846
Filed: March 17, 1997

CERTIFICATE OF MAILING

I HEREBY CERTIFY that this correspondence is being deposited with the United States Postal Service as First Class Mail in an envelope addressed to: ASSISTANT COMMISSIONER FOR PATENTS, WASHINGTON, D.C. 20231, on this 9th day of April, 1999.

Julie Lalan

Rembrandt Wireless
Ex. 2012
Apple Inc. v. Rembrandt Wireless Technologies, LP, IPR2020-00033
Page 748

BEST COPY

UNITED STATES DEPARTMENT OF COMMERCE
Patent and Trademark Office
Address: COMMISSIONER OF PATENTS AND TRADEMARKS
Washington, D.C. 20231

APPLICATION NO.	FILING DATE	FIRST NAMED INVENTOR	ATTORNEY DOCKET NO.
09/819,846	03/17/97	SNELL J	SE-1301-WR/H

LM11/0603

CHRLISTOPHER F. REGAN
ALLEN DYER DOPPELT MILBRATH & GILCHRIST
255 S. ORANGE AVENUE, SUITE 1401
P. O. BOX 3791
ORLANDO FL 32802

EXAMINER	
GHAYOUR, M	
ART UNIT	PAPER NUMBER
2734	7

DATE MAILED: 06/03/99

Please find below and/or attached an Office communication concerning this application or proceeding.

Commissioner of Patents and Trademarks

PTO-90C (Rev. 2/95) 1- File Copy

Notice of Allowability	Application No. 08/818,846	Applicant(s) James L. Snell
	Examiner Mohammad Ghayour	Group Art Unit 2734

All claims being allowable, PROSECUTION ON THE MERITS IS (OR REMAINS) CLOSED in this application. If not included herewith (or previously mailed), a Notice of Allowance and Issue Fee Due or other appropriate communication will be mailed in due course.

☒ This communication is responsive to 4/19/99.

☒ The allowed claim(s) is/are 1-61.

☐ The drawings filed on _____ are acceptable.

☐ Acknowledgement is made of a claim for foreign priority under 35 U.S.C. § 119(a)-(d).

☐ All ☐ Some* ☐ None of the CERTIFIED copies of the priority documents have been

☐ received.

☐ received in Application No. (Series Code/Serial Number) _____.

☐ received in this national stage application from the International Bureau (PCT Rule 17.2(a)).

*Certified copies not received: _____.

☐ Acknowledgement is made of a claim for domestic priority under 35 U.S.C. § 119(e).

A SHORTENED STATUTORY PERIOD FOR RESPONSE to comply with the requirements noted below is set to EXPIRE THREE MONTHS FROM THE "DATE MAILED" of this Office action. Failure to timely comply will result in ABANDONMENT of this application. Extensions of time may be obtained under the provisions of 37 CFR 1.136(a).

☐ Note the attached EXAMINER'S AMENDMENT or NOTICE OF INFORMAL APPLICATION, PTO-152, which discloses that the oath or declaration is deficient. A SUBSTITUTE OATH OR DECLARATION IS REQUIRED.

☒ Applicant MUST submit NEW FORMAL DRAWINGS

☒ Because the originally filed drawings were declared by applicant to be informal.

☐ Including changes required by the Notice of Draftsperson's Patent Drawing Review, PTO-948, attached hereto or to Paper No. _____.

☐ Including changes required by the proposed drawing correction filed on _____, which has been approved by the examiner.

☐ Including changes required by the attached Examiner's Amendment/Comment.

Identifying indicia such as the application number (see 37 CFR 1.84(c)) should be written on the reverse side of the drawings. The drawings should be filed as a separate paper with a transmittal letter addressed to the Official Draftsperson.

☐ Note the attached Examiner's comment regarding REQUIREMENT FOR THE DEPOSIT OF BIOLOGICAL MATERIAL.

Any response to this letter should include, in the upper right hand corner, the APPLICATION NUMBER (SERIES CODE/SERIAL NUMBER). If applicant has received a Notice of Allowance and Issue Fee Due, the ISSUE BATCH NUMBER and DATE of the NOTICE OF ALLOWANCE should also be included.

Attachment(s)

☐ Notice of References Cited, PTO-892

☐ Information Disclosure Statement(s), PTO-1449, Paper No(s). _____

☐ Notice of Draftsperson's Patent Drawing Review, PTO-948

☐ Notice of Informal Patent Application, PTO-152

☐ Interview Summary, PTO-413

☐ Examiner's Amendment/Comment

☐ Examiner's Comment Regarding Requirement for Deposit of Biological Material

☐ Examiner's Statement of Reasons for Allowance

STEPHEN CHIN
SUPERVISORY PATENT EXAMINER
GROUP 2700

U. S. Patent and Trademark Office
PTO-37 (Rev. 9-95) Notice of Allowability Part of Paper No. 2

UNITED STATES DEPARTMENT OF COMMERCE
Patent and Trademark Office

NOTICE OF ALLOWANCE AND ISSUE FEE DUE

LM11/0603

CHRLISTOPHER F. REGAN
ALLEN DYER DOPPELT MILBRATH & GILCHRIST
255 S. ORANGE AVENUE, SUITE 1401
P. O. BOX 3791
ORLANDO FL 32802

APPLICATION NO.	FILING DATE	TOTAL CLAIMS	EXAMINER AND GROUP ART UNIT		DATE MAILED
09/819,846	03/17/97	061	GHAYOUR, M	2734	06/03/99

First Named Applicant: SNELL, 35 USC 154(b) term ext. = 0 Days.

TITLE OF INVENTION: HIGH DATA RATE SPREAD SPECTRUM TRANSCEIVER AND ASSOCIATED METHODS

ATTY'S DOCKET NO.	CLASS-SUBCLASS	BATCH NO.	APPLN. TYPE	SMALL ENTITY	FEE DUE	DATE DUE
2 SE-1301-WR/H	375-200.000	T03	UTILITY	NO	$1210.00	09/03/99

THE APPLICATION IDENTIFIED ABOVE HAS BEEN EXAMINED AND IS ALLOWED FOR ISSUANCE AS A PATENT. PROSECUTION ON THE MERITS IS CLOSED.

THE ISSUE FEE MUST BE PAID WITHIN THREE MONTHS FROM THE MAILING DATE OF THIS NOTICE OR THIS APPLICATION SHALL BE REGARDED AS ABANDONED. THIS STATUTORY PERIOD CANNOT BE EXTENDED.

HOW TO RESPOND TO THIS NOTICE:

I. Review the SMALL ENTITY status shown above.
If the SMALL ENTITY is shown as YES, verify your current SMALL ENTITY status:

A. If the status is changed, pay twice the amount of the FEE DUE shown above and notify the Patent and Trademark Office of the change in status, or
B. If the status is the same, pay the FEE DUE shown above.

If the SMALL ENTITY is shown as NO:

A. Pay FEE DUE shown above, or

B. File verified statement of Small Entity Status before, or with, payment of 1/2 the FEE DUE shown above.

II. Part B-Issue Fee Transmittal should be completed and returned to the Patent and Trademark Office (PTO) with your ISSUE FEE. Even if the ISSUE FEE has already been paid by charge to deposit account, Part B Issue Fee Transmittal should be completed and returned. If you are charging the ISSUE FEE to your deposit account, section "4b" of Part B-Issue Fee Transmittal should be completed and an extra copy of the form should be submitted.

III. All communications regarding this application must give application number and batch number. Please direct all communications prior to issuance to Box ISSUE FEE unless advised to the contrary.

IMPORTANT REMINDER: Utility patents issuing on applications filed on or after Dec. 12, 1980 may require payment of maintenance fees. It is patentee's responsibility to ensure timely payment of maintenance fees when due.

PATENT AND TRADEMARK OFFICE COPY

PTOL-85 (REV. 10-96) Approved for use through 05/30/99. (0651-0033)

2566
6/15/99
#10 SB

IN THE UNITED STATES PATENT AND TRADEMARK OFFICE

In re Patent Application of: SNELL

Serial No. 08/819,846

Filed: March 1, 1997

For: HIGH DATA RATE SPREAD SPECTRUM TRANSCEIVER AND ASSOCIATED METHODS

Examiner: M. Ghayour

Art Unit: 2734

OIPE JUN 11 1999 PATENT & TRADEMARK OFFICE

RECEIVED JUN 18 1999 Publishing Division 04

TRANSMITTAL OF FORMAL DRAWINGS

Assistant Commissioner for Patents
Washington, D.C. 20231

Sir:

Please file the enclosed eight (8) sheets of formal drawings to be filed in the above-identified patent application.

Respectfully submitted,

RICHARD K. WARTHEN
Reg. No. 32,180
Allen, Dyer, Doppelt, Milbrath & Gilchrist, P.A.
255 S. Orange Ave., Suite 1401
P. O. Box 3791
Orlando, Florida 32802
(407) 841-2330

CERTIFICATE OF MAILING

I hereby certify that this correspondence is being deposited with the United States Postal Service as first class mail in an envelope addressed to: ASSISTANT COMMISSIONER FOR PATENTS, WASHINGTON, D.C. 20231, on this 8th day of June, 1999.

Julie Solan

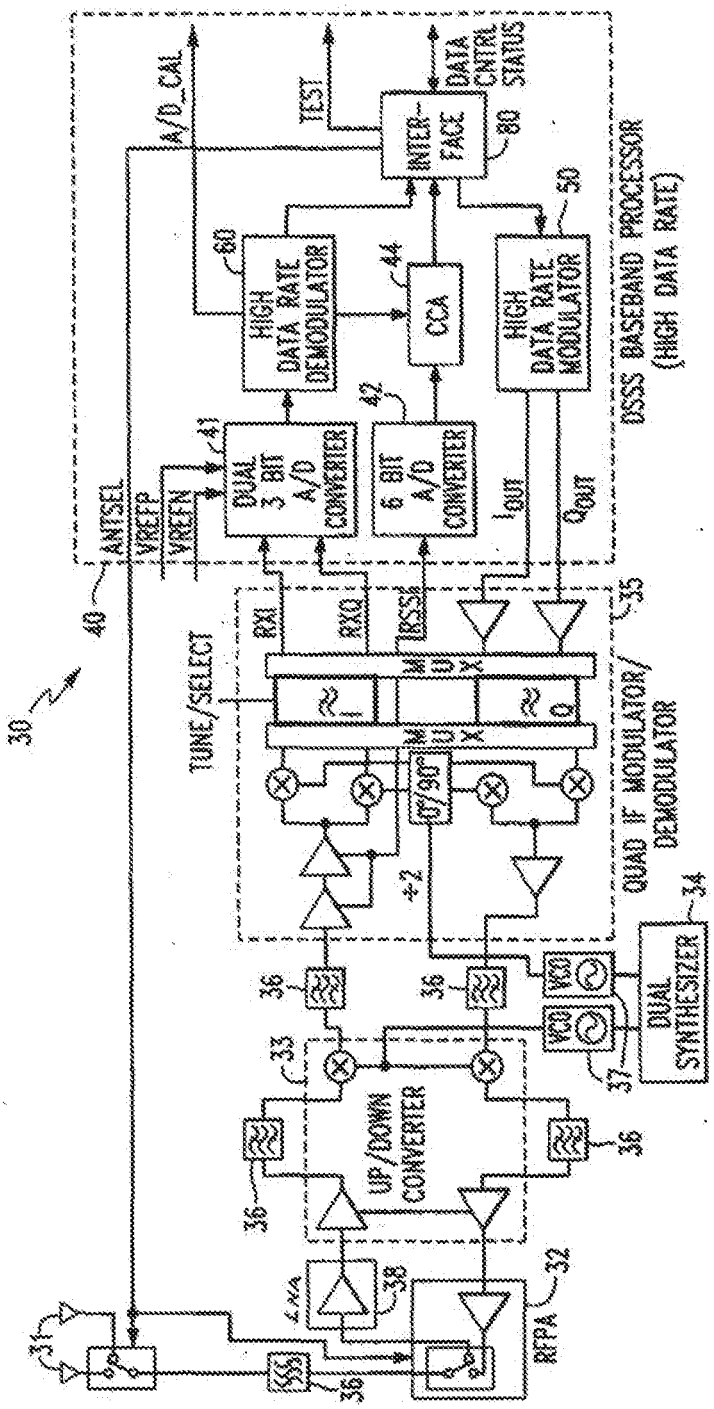
A/D_CAL
TEST
DATA CNTRL STATUS
INTER-FACE
80
HIGH DATA RATE DEMODULATOR
60
CCA
44
HIGH DATA RATE MODULATOR
50
DSSS BASEBAND PROCESSOR (HIGH DATA RATE)
DUAL 3 BIT A/D CONVERTER
4
6 BIT A/D CONVERTER
42
ANTSEL
VREFP
VREFN
40
30
RXI
RXQ
RSSI
IOUT
QOUT
35
TUNE/SELECT
QUAD IF MODULATOR/ DEMODULATOR
0°/90°
÷2
DUAL SYNTHESIZER
34
VCO
37
36
33
UP/DOWN CONVERTER
LNA
38
RFPA
32
31
39

FIG. 1

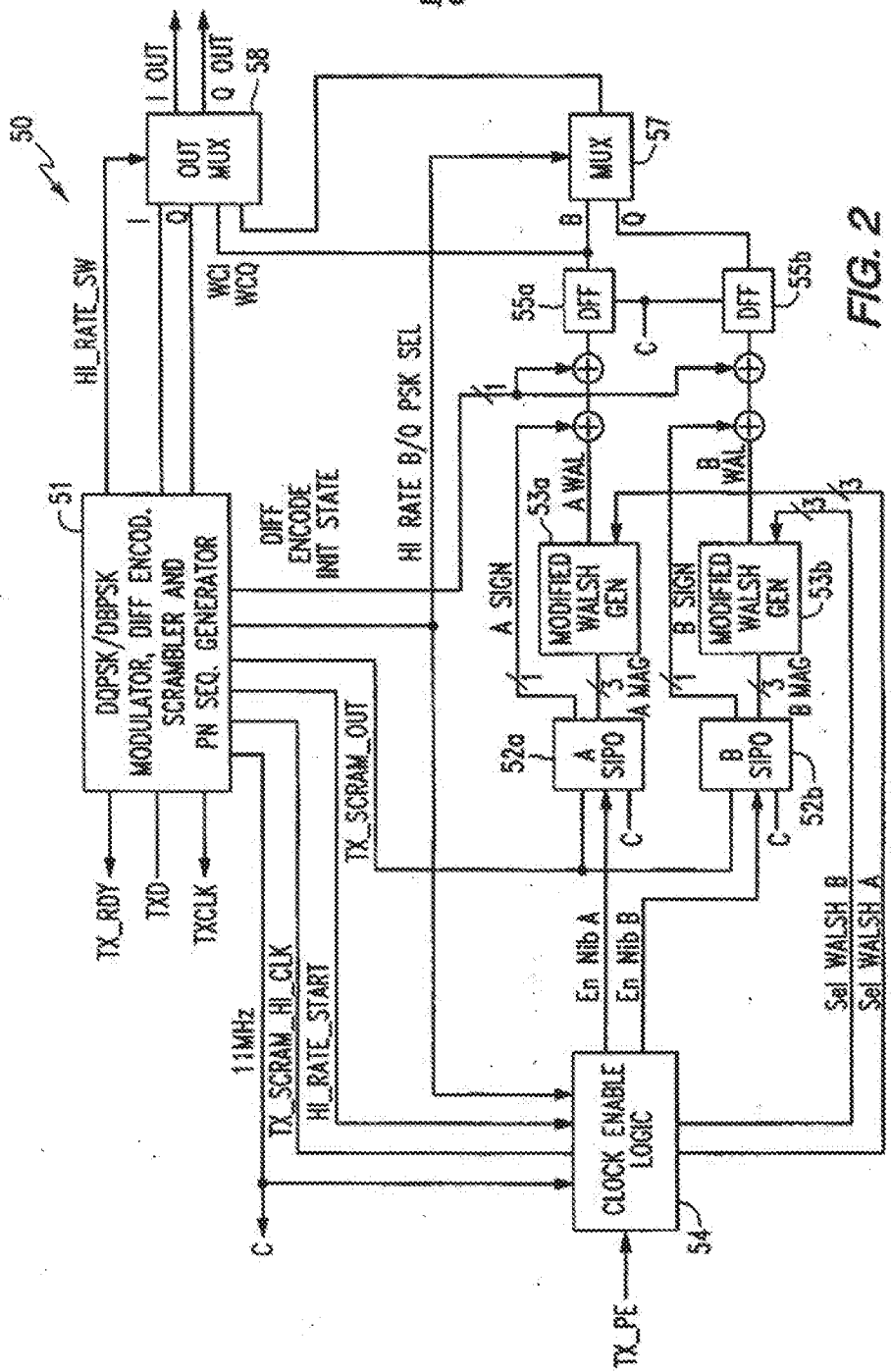
50
I OUT
Q OUT
58
OUT MUX
MUX
57
HI_RATE_SW
I
Q
WCI
WCQ
B
Q
55a
DIFF
55b
DIFF
C
51
DQPSK/DBPSK MODULATOR, DIFF ENCOD. SCRAMBLER AND PN SEQ. GENERATOR
DIFF ENCODE INIT STATE
HI RATE B/Q PSK SEL
A SIGN
53a
A WAL
MODIFIED WALSH GEN
B SIGN
B WAL
MODIFIED WALSH GEN
53b
A MAG
B MAG
52a
A SIPO
B SIPO
52b
TX_RDY
TXD
TXCLK
TX_SCRAM_OUT
11MHz
TX_SCRAM_HI_CLK
HI_RATE_START
En Nib A
En Nib B
Sel WALSH B
Sel WALSH A
CLOCK ENABLE LOGIC
54
TX_PE

FIG. 2

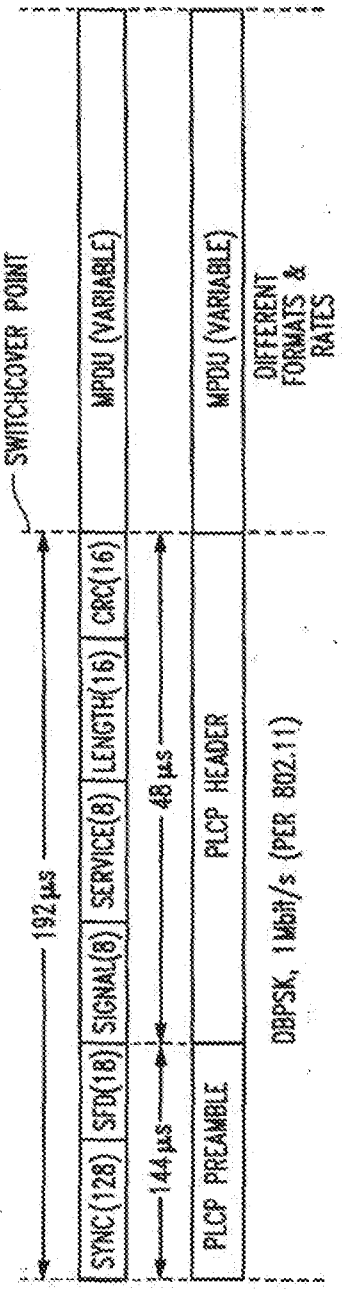
SWITCHOVER POINT
192 µs
SYNC(128)
SFD(16)
SIGNAL(8)
SERVICE(8)
LENGTH(16)
CRC(16)
MPDU (VARIABLE)
144 µs
48 µs
PLCP PREAMBLE
PLCP HEADER
MPDU (VARIABLE)
DIFFERENT FORMATS & RATES
DBPSK, 1 Mbit/s (PER 802.11)

FIG. 3

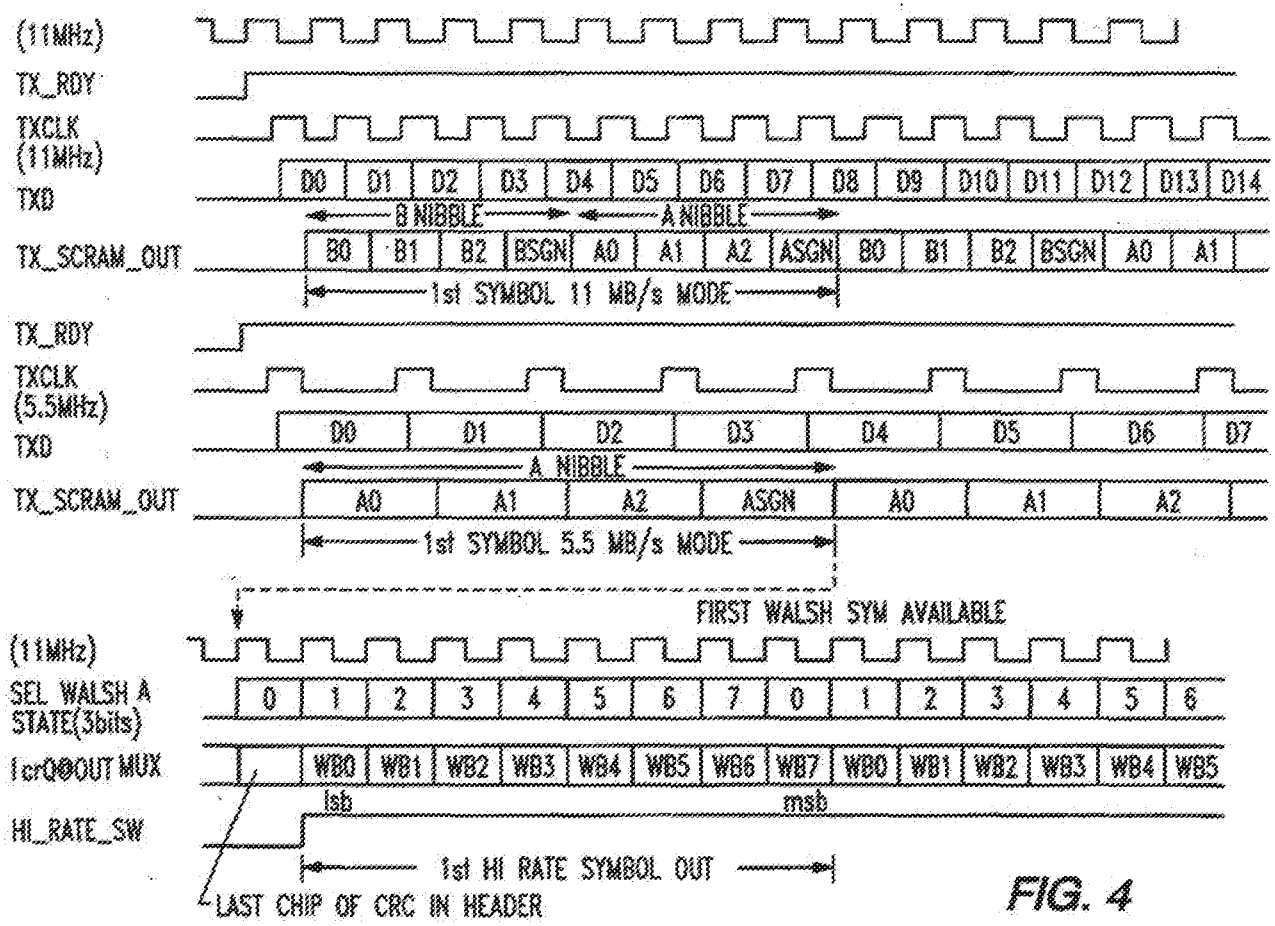
(11MHz)
TX_RDY
TXCLK (11MHz)
TXD
D0 D1 D2 D3 D4 D5 D6 D7 D8 D9 D10 D11 D12 D13 D14
B NIBBLE
A NIBBLE
TX_SCRAM_OUT
B0 B1 B2 BSGN A0 A1 A2 ASGN B0 B1 B2 BSGN A0 A1
1st SYMBOL 11 MB/s MODE
TX_RDY
TXCLK (5.5MHz)
TXD
D0 D1 D2 D3 D4 D5 D6 D7
A NIBBLE
TX_SCRAM_OUT
A0 A1 A2 ASGN A0 A1 A2
1st SYMBOL 5.5 MB/s MODE
FIRST WALSH SYM AVAILABLE
(11MHz)
SEL WALSH A STATE(3bits)
0 1 2 3 4 5 6 7 0 1 2 3 4 5 6
IcrQ@OUT MUX
WB0 WB1 WB2 WB3 WB4 WB5 WB6 WB7 WB0 WB1 WB2 WB3 WB4 WB5
lsb
msb
HI_RATE_SW
1st HI RATE SYMBOL OUT
LAST CHIP OF CRC IN HEADER

FIG. 4

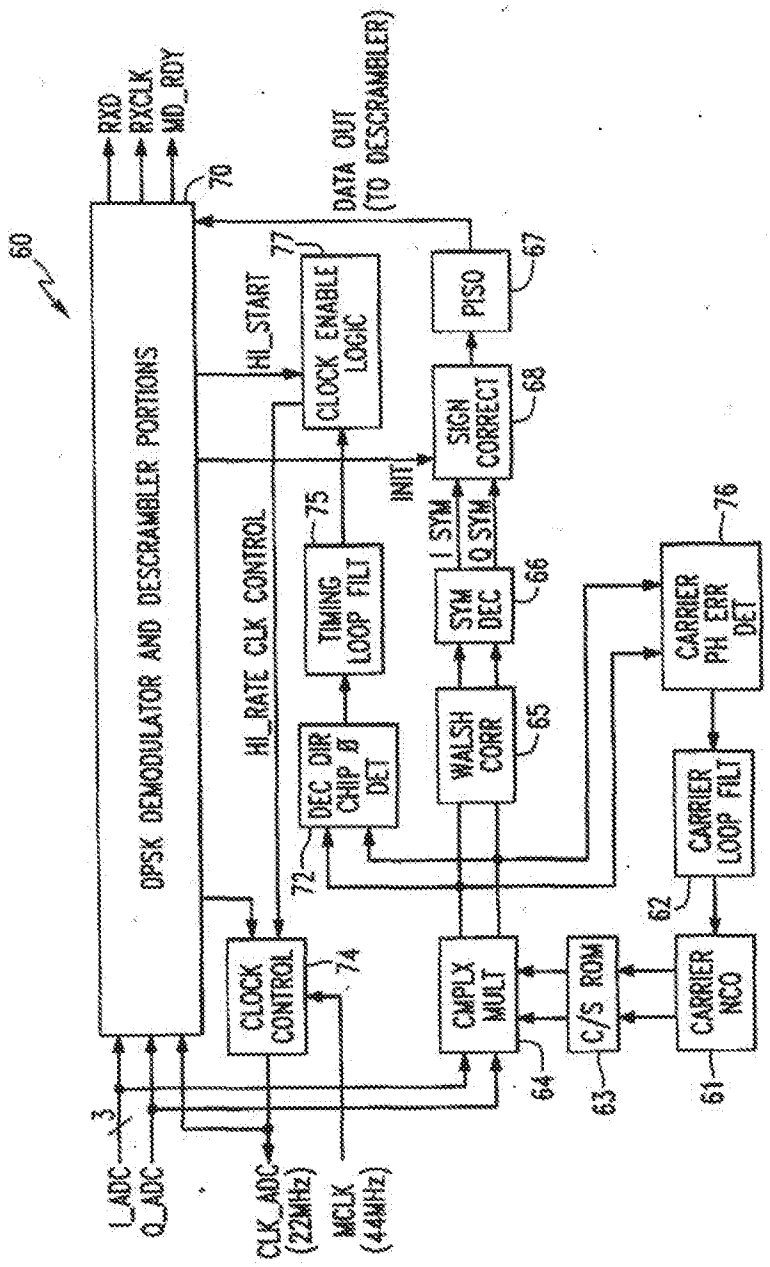
60
RXD
RXCLK
WD_RDY
70
DATA OUT
(TO DESCRAMBLER)
OPSK DEMODULATOR AND DESCRAMBLER PORTIONS
HL_START
77
CLOCK ENABLE LOGIC
PISO
67
SIGN CORRECT
68
INIT
I_SYM
Q_SYM
HL_RATE CLK CONTROL
75
TIMING LOOP FILT
SYM DEC
66
76
CARRIER PH ERR DET
DEC DIR CHIP Ø DET
WALSH CORR
65
72
CARRIER LOOP FILT
62
CLOCK CONTROL
74
CMPLX MULT
C/S ROM
CARRIER NCO
64
63
61
3
I_ADC
Q_ADC
CLK_ADC
(22MHz)
MCLK
(44MHz)

FIG. 5

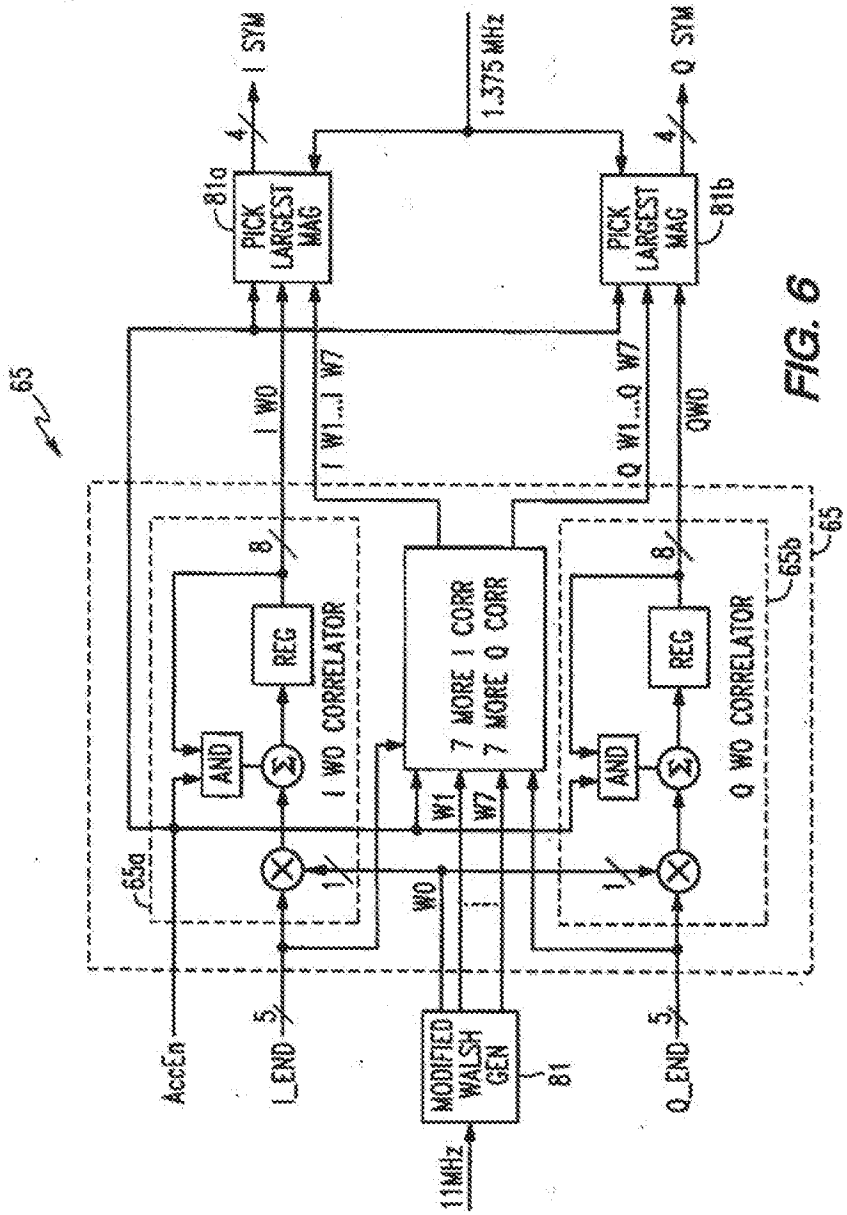
65
I SYM
Q SYM
1.375 MHz
81a
PICK LARGEST MAG
81b
PICK LARGEST MAG
I W0
I W1...I W7
Q W1...Q W7
QW0
8
REG
AND
I W0 CORRELATOR
7 MORE I CORR
7 MORE Q CORR
Q W0 CORRELATOR
65a
65b
W1
W7
W0
AccEn
I_END
Q_END
MODIFIED WALSH GEN
81
11MHz

FIG. 6

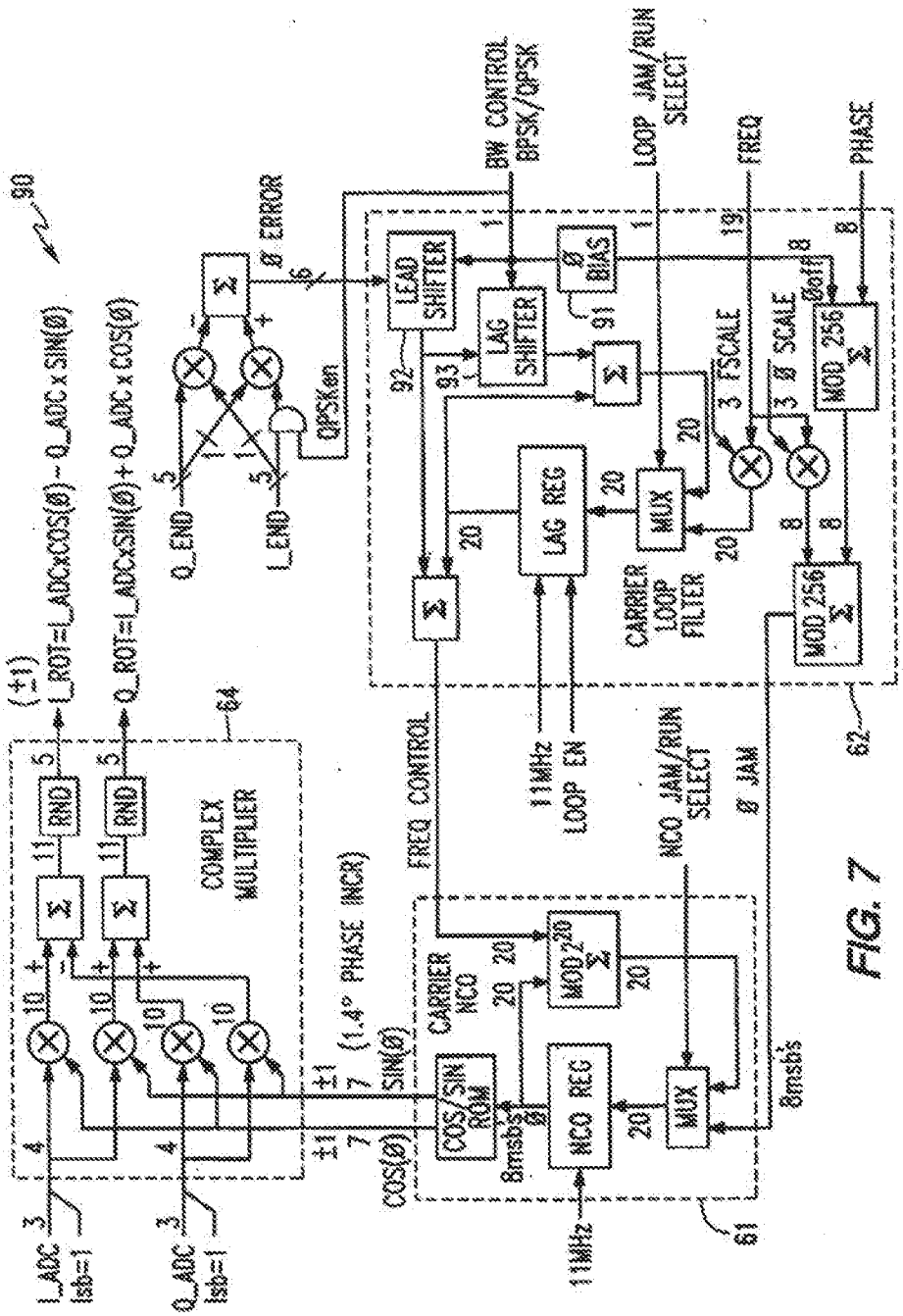
90
L_ADC
Isb=1
Q_ADC
Isb=1
(±1)
L_ROT=L_ADCxCOS(Ø) - Q_ADC x SIN(Ø)
Q_ROT=L_ADCxSIN(Ø) + Q_ADC x COS(Ø)
RND
COMPLEX MULTIPLIER
64
Q_END
L_END
QPSKen
Ø ERROR
COS(Ø)
SIN(Ø)
(1.4° PHASE INCR)
CARRIER NCO
COS/SIN ROM
8msbs
NCO REG
11MHz
FREQ CONTROL
MOD 2^20
MUX
NCO JAM/RUN SELECT
Ø JAM
61
LEAD SHIFTER
LAG SHIFTER
Ø BIAS
BW CONTROL BPSK/QPSK
LOOP JAM/RUN SELECT
FREQ
PHASE
LAG REG
11MHz
LOOP EN
CARRIER LOOP FILTER
3 FSCALE
3 Ø SCALE
MOD 256
62

FIG. 7

Exhibit M

DOCKET NO.: REMB-0109 **PATENT**
Application No.: 12/543,910
Office Action Dated: September 1, 2010

IN THE UNITED STATES PATENT AND TRADEMARK OFFICE

In re Application of: **Gordon Bremer**	**Confirmation No.: 8306**
Application No.: 12/543,910	**Group Art Unit: 2611**
Filing Date: August 19, 2009	**Examiner: Dac V Ha**

For: System and Method of Communication Via Embedded Modulation

Mail Stop Amendment
Commissioner for Patents
P.O. Box 1450
Alexandria, VA 22313-1450

Sir:

REPLY PURSUANT TO 37 CFR § 1.111

In response to the Official Action dated **September 1, 2010**, reconsideration is respectfully requested in view of the amendments and/or remarks as indicated below:

- ☒ **Amendments to the Specification** begin on page 2 of this paper.
- ☒ **Amendments to the Claims** are reflected in the listing of the claims which begins on page 7 of this paper.
- ☒ **Amendments to the Drawings** begin on page 19 of this paper and include an attached replacement sheet.
- ☒ **Remarks** begin on page 20 of this paper.
- ☐ **Request For Refund** submitted herewith.

Rembrandt Wireless
Ex. 2012
Apple Inc. v. Rembrandt Wireless Technologies, LP, IPR2020-00033
Page 760
IPR2020-00036 Page 00760

Amendments to the Specification:

Please replace the Summary section, which corresponds to paragraphs [0008] – [0013] of the specification, with the following:

[0008] The present invention disclosed herein includes communication systems, devices, and methods. For example, a device may be capable of communicating according to a master/slave relationship in which a communication from a slave to a master occurs in response to a communication from the master to the slave. The device may include a transceiver in the role of the master for sending transmissions modulated using at least two types of modulation methods, for example a first modulation method and a second modulation method. The first modulation method may be of a different type than the second modulation method. The transmissions may be groups of transmission sequences. A group may be structured with a first portion and a payload portion. First information in the first portion may indicate which of the first modulation method or the second modulation method is used for modulating second information in the payload portion. The transmissions may be addressed for an intended destination of the payload portion. First information in a transmission that includes an address for an intended destination may include a first sequence in the first portion that is modulated according to the first modulation method and that indicates an impending change from the first modulation method to the second modulation method. Second information in a transmission that includes an address for an intended destination may include a second sequence in the payload portion that is modulated according to the second modulation method. The second sequence may be transmitted after the first sequence.

~~**[0008]** The present invention is generally directed to a system and method of communication between a master transceiver and a plurality of tributary transceivers in a multipoint communication system in which the tributary transceivers use different types of modulation methods. Broadly stated, the communication system includes a master transceiver in communication with a first tributary transceiver and a second tributary transceiver over a communication medium. The first tributary transceiver uses a primary modulation method for communication while the second tributary transceiver uses a secondary or embedded modulation method for communication. The master transceiver and~~

Rembrandt Wireless
Ex. 2012
Apple Inc. v. Rembrandt Wireless Technologies, LP, IPR2020-00033
Page 761
IPR2020-00036 Page 00761

~~tributary transceivers each include a processor, memory, and control logic for controlling their operation. While the primary modulation method is normally used for transmissions on the communication medium, the master transceiver can communicate with the second tributary transceiver by notifying the first tributary transceiver that the primary modulation method is being temporarily replaced by the secondary or embedded modulation method. The master transceiver can then exchange information with the second tributary transceiver while the first tributary transceiver ignores any secondary modulation transmissions. In the meantime, the first tributary transceiver conditions itself to look for a trailing sequence from the master transceiver indicating that communication with the second tributary transceiver is complete. When the master transceiver transmits the trailing sequence using the primary modulation method, the first tributary transceiver conditions itself to look for primary modulation transmissions while the second tributary transceiver conditions itself to ignore primary modulation transmissions.~~

[0009] The present invention has many advantages, a few of which are delineated hereafter as merely examples.

[0010] One advantage of the present invention is that it provides to the use of a plurality of modem modulation methods on the same communication medium.

[0011] Another advantage of the present invention is that a master transceiver can communicate seamlessly with tributary transceivers or modems using incompatible modulation methods.

~~**[0012]** Another advantage of the present invention is that a master and tributary transceiver can calculate a channel parameter using a test signal sent using embedded modulation.~~

[0013] Other features and advantages of the present invention will become apparent to one with skill in the art upon examination of the following drawings and detailed description. It is intended that all such additional features and advantages be included herein within the scope of the present invention.

Please amend paragraph [0022] of the specification as follows:

Rembrandt Wireless
Ex. 2012
Apple Inc. v. Rembrandt Wireless Technologies, LP, IPR2020-00033
Page 762
IPR2020-00036 Page 00762

[0022] FIG. 8 ~~is a ladder diagram illustrating the operation of an alternative embodiment of the multipoint communication system of FIG. 4~~ is a signal diagram for an exemplary transmission according to an embodiment.

Please amend paragraph [0025] of the specification as follows:

[0025] Referring now to FIG. 2, an exemplary multipoint communication session is illustrated through use of a ladder diagram. This system uses polled multipoint communication protocol. That is, a master controls the initiation of its own transmission to the tribs and permits transmission from a trib only when that trib has been selected. At the beginning of the session, the master transceiver 24 establishes a common modulation as indicated by sequence 32 that is used by both the master 24 and the tribs 26a, 26b for communication. Once the modulation scheme is established among the modems in the multipoint system, The master transceiver 24 transmits a training sequence 34 that includes the address of the trib that the master seeks to communicate with. In this case, the training sequence 34 includes the address of trib 26a. As a result, trib 26b ignores training sequence 34. After completion of the training sequence 34, master transceiver 24 transmits data 36 to trib 26a followed by trailing sequence 38, which signifies the end of the communication session. Similarly, with reference to FIG. 8, the sequence 170 illustrates a Type A modulation training signal, followed by a Type A modulation data signal. Note that trib 26b ignores data 36 and trailing sequence 38 as it was not requested for communication during training sequence 34.

Please amend paragraph [0027] of the specification as follows:

[0027] The foregoing procedure is repeated except master transceiver identifies trib 26b in training sequence 48. In this case, trib 26a ignores the training sequence 48 and the subsequent transmission of data 52 and trailing sequence 54 because it does not recognize its address in training sequence 48. Master transceiver 24 transmits data 52 to trib 26b followed by trailing sequence 54 to terminate the communication session. Similarly, with reference to FIG. 8, sequence 172 illustrates a Type A modulation signal, with notification of a changes to Type B, followed by a Type B modulation data signal. To send information back to master transceiver 24, trib 26b transmits training sequence 56 to establish a communication session.

Rembrandt Wireless
Ex. 2012
Apple Inc. v. Rembrandt Wireless Technologies, LP, IPR2020-00033 **IPR2020-00036 Page 00763**
Page 763

Master transceiver 24 is conditioned to expect data only from trib 26b because trib 26b was selected as part of training sequence 48. Trib 26b transmits data 58 to master transceiver 24 terminated by trailing sequence 62.

Please delete paragraphs [0042] – [0046]

~~**[0042]** In an alternative embodiment of the present invention, embedded modulations can be used as a way to measure transmission line characteristics between a master transceiver and tributary transceiver, as shown in FIG. 8. In this embodiment, both a master transceiver 64 and a tributary transceiver 66a would have the ability to transmit using at least two modulation methods, type A and type B. In the present example, the primary transmission type is type A. Thus, as shown in FIG. 8, the master transceiver 64 establishes type A as the primary modulation in sequence 150.~~

~~**[0043]** To switch from type A to type B modulation, master transceiver 64 transmits a notification sequence 152 to the tributary 66a. Thus, the tributary 66a is notified of an impending change to modulation type B. The switch to type B modulation could be limited according to a specific time interval or for the communication of a particular quantity of data, such as a test signal. After notifying the tributary 66a of the change to type B modulation, the master transceiver 64, transmits a test signal sequence 154 using type B modulation.~~

~~**[0044]** In this embodiment, the tributary transceiver can contain logic which enables the tributary 66a to calculate at least one channel parameter from the test signal sequence 154. Channel parameters typically include transmission line characteristics, such as, for example, loss versus frequency, non-linear distortion, listener echoes, talker echoes, bridge tap locations, impedance mismatches, noise profile, signal-to- noise ratio, group delay versus frequency, cross-talk presence, cross-talk type, etc. Moreover, the tributary transceiver 66a could be configured to communicate a channel parameter back to the master transceiver 64.~~

~~**[0045]** After transmitting the test signal sequence 154 to the tributary transceiver 66a, the master transceiver 64 can transmit a trailing sequence 156 to the tributary transceiver 66a using type A modulation to indicate the end of the transmission using type B modulation. The master transceiver 64 can then send information to the tributary transceiver 66a using primary modulation type A, as shown by training, data and trailing sequences 158, 160 and 162. Likewise, the tributary transceiver 66a can send information to the master transceiver 64~~

Rembrandt Wireless
Ex. 2012
Apple Inc. v. Rembrandt Wireless Technologies, LP, IPR2020-00033
Page 764
IPR2020-00036 Page 00764

~~using primary modulation type A, as shown by training, data and trailing sequences 164, 166 and 168.~~

~~**[0046]** In a further alternative embodiment, the master transceiver 64 or tributary transceiver 66a may identify a time period within which test signal sequences may be transmitted. This would eliminate the training and trailing sequences which alert the tributary transceiver 66a to the beginning of a new modulation method. The identification of the time period could be initiated by the master transceiver 64 or tributary transceiver 66a and could include a time period noted in the header of a transmission between the tributary transceiver 66a and master transceiver 64.~~

Please amend the Abstract as shown below. A clean version of the Abstract submitted on a separate sheet is also submitted herewith.

A device may be capable of communicating using at least two type types of modulation methods. ~~single subscriber line multi-point communication system is disclosed. In general, the multi-point communication system can~~ The device may include a ~~first~~ transceiver ~~coupled to a subscriber line~~ capable of acting as a master according to a master/slave relationship in which communication from a slave to a master occurs in response to communication from the master to the slave. ~~transmitting and receiving at least two modulation methods, either of said modulation methods being operable to transmit a test signal, and a second transceiver coupled to said subscriber line capable of transmitting and receiving said at least two modulation methods, the second transceiver being operable to receive the test signal and determine at least one channel parameter from the test signal. A~~ The master transceiver may send transmissions structured with a first portion and a payload portion. ~~that can be used in various embodiments of a single subscriber line multi-point communication system, and a tributary transceiver are further disclosed~~ Information in the first portion may be modulated according to a first modulation method and indicate an impending change to a second modulation method, which is used for transmitting the payload portion. The transmissions may be addressed for an intended destination of the payload portion.

Rembrandt Wireless
Ex. 2012
Apple Inc. v. Rembrandt Wireless Technologies, LP, IPR2020-00033
Page 765
IPR2020-00036 Page 00765

This listing of claims will replace all prior versions, and listings, of claims in the application.

Listing of Claims:

1. (Currently Amended) A communication ~~system~~ device capable of communicating according to a master/slave relationship in which a slave communication from a slave to a master occurs in response to a master communication from the master to the slave, the device comprising:

a transceiver, in the role of the master according to the master/slave relationship, for sending at least ~~transmitter capable of transmitting~~ transmissions modulated using at least two types of modulation methods, wherein the at least two types of modulation methods comprise a first modulation method and a second modulation method, wherein the second modulation method is of a different type than the first modulation method, ~~and~~ wherein the ~~first transceiver is configured to transmit~~ transmissions comprise groups of transmission sequences, each group of said groups of transmission sequences structured with a first portion and a payload portion wherein first information in the first portion indicates at least which of the first modulation method and the second modulation method is used for modulating second information in the payload portion, wherein at least one group of transmission sequences is addressed for an intended destination of the payload portion, and wherein for the at least one group of transmission sequences:

the first information for said at least one group of transmission sequences comprises a first sequence, in the first portion and modulated according to the first modulation method, wherein the first sequence ~~that~~ indicates an impending change from the first modulation method to the second modulation method, and

the second information for said at least one group of transmission sequences comprises a second sequence, ~~in~~ modulated according to the second modulation method, wherein the second sequence is transmitted after the first ~~data~~ sequence.

2. (Currently Amended) The ~~system~~ device of claim 1, wherein the transceiver is configured to transmit a third sequence after the second sequence, wherein the third sequence is transmitted in the first modulation method and indicates that communication from the master to the slave has reverted to the first modulation method.

Rembrandt Wireless
Ex. 2012
Apple Inc. v. Rembrandt Wireless Technologies, LP, IPR2020-00033
IPR2020-00036 Page 00766
Page 766

3. – 8. (Canceled)

9. (Currently Amended) The ~~system~~ device of claim 1, wherein the ~~first~~ transceiver is configured to transmit the second sequence according to a specific time interval.

10. (Currently Amended) The ~~system~~ device of claim 1, wherein the ~~first~~ transceiver is configured to transmit the second sequence according to a particular quantity of data.

11. (Currently Amended) The ~~system~~ device of claim 1, further comprising a processor and a memory, wherein the memory has stored therein instructions that when executed by the processor cause the transceiver ~~transmitter~~ to transmit the first sequence and the second sequence.

12. (Currently Amended) The ~~system~~ device of claim 11, wherein the memory has stored therein program code for the first modulation method and the second modulation method.

13. (Currently Amended) The ~~system~~ device of claim 11, wherein the memory comprises random access memory.

14. (Currently Amended) The ~~system~~ device of claim 11, wherein the memory comprises read-only memory.

15. (Currently Amended) The device of claim 11, wherein the memory has stored therein program code for operating the transceiver in a multipoint master/slave relationship ~~communications protocol~~.

16. – 17. (Canceled)

18. (Currently Amended) The ~~system~~ device of claim 1 ~~17~~, wherein the first communication from the master to the slave ~~burst transmission~~ is a poll in accordance with a multipoint communications ~~protocol~~ relationship, wherein the poll indicates that the master has selected the slave for transmission.

Rembrandt Wireless
Ex. 2012
Apple Inc. v. Rembrandt Wireless Technologies, LP, IPR2020-00033
Page 767

19. (Canceled)

20. (Currently Amended) ~~The device of claim 19~~ A communications device, comprising:

a processor; and

a memory having stored therein executable instructions for execution by the processor, wherein the executable instructions direct transmission of a first data with a first modulation method followed by a second data with a second modulation method, wherein the first modulation method is different than the second modulation method, wherein the first data comprises an indication of an impending change from the first modulation method to the second modulation method, wherein the executable instructions direct transmission of a third data with the first modulation method after the second data, and wherein the third data indicates that communication has reverted to the first modulation method.

21. – 26. (Canceled)

27. (Currently Amended) The device of claim 20 ~~19~~, wherein transmission of the second data is according to a specific time interval.

28. (Currently Amended) ~~The device of claim 19,~~ A communications device, comprising:

a processor; and

a memory having stored therein executable instructions for execution by the processor, wherein the executable instructions direct transmission of a first data with a first modulation method followed by a second data with a second modulation method, wherein the first modulation method is different than the second modulation method, wherein the first data comprises an indication of an impending change from the first modulation method to the second modulation method wherein the executable instructions direct transmission of a third data with the first modulation method after the second data, and wherein transmission of the second data is according to a particular quantity of data.

29. (Currently Amended) The device of claim 20 ~~19~~, further comprising a transmitter configured to transmit the first data and the second data.

Rembrandt Wireless
Ex. 2012
Apple Inc. v. Rembrandt Wireless Technologies, LP, IPR2020-00033
Page 768
IPR2020-00036 Page 00768

30. (Currently Amended) The device of claim 20 ~~19~~, wherein the memory has stored therein program code for the first modulation method and the second modulation method.

31. (Currently Amended) The device of claim 20 ~~19~~, wherein the memory comprises random access memory.

32. (Currently Amended) The device of claim 20 ~~19~~, wherein the memory comprises read-only memory.

33. (Currently Amended) The device of claim 20 ~~19~~, wherein the memory has stored therein program code for a multipoint communications protocol.

34. – 36. (Canceled)

37. (Currently Amended) A device ~~comprising:~~ that transmits in accordance with a first modulation ~~logic;~~ method and a second modulation ~~logic~~ method that is different than the first modulation ~~logic; and~~ method, said device comprising:

at least one modulator;

a transceiver that includes the at least one modulator ~~adapted to use the first modulation logic and the second modulation logic~~, wherein the transceiver is configured to transmit:

a first sequence, modulated in accordance with the first modulation method ~~logic~~, that indicates ~~a~~ an impending change from the first modulation method ~~logic~~ to the second modulation method ~~logic~~, and

a second sequence, in accordance with the second modulation method ~~logic~~, that is transmitted at a time after ~~follows~~ the first data sequence.

38. (Currently Amended) The device of claim 37, wherein the transceiver is configured to transmit a third sequence after the second sequence, wherein the third sequence is transmitted in accordance with the first modulation method ~~logic~~ and indicates that a subsequent communication has reverted to the first modulation method ~~logic~~.

Rembrandt Wireless
Ex. 2012
Apple Inc. v. Rembrandt Wireless Technologies, LP, IPR2020-00033
Page 769
IPR2020-00036 Page 00769

39. – 44. (Canceled)

45. (Currently Amended) The device of claim 37, wherein the ~~first~~ transceiver is configured to transmit the second sequence according to a specific time interval.

46. (Currently Amended) The device of claim 37, wherein the ~~first~~ transceiver is configured to transmit the second sequence according to a particular quantity of data.

47. (Original) The device of claim 37, further comprising a processor and a memory, wherein the memory has stored therein instructions that when executed by the processor cause the transmitter to transmit the first sequence and the second sequence.

48. (Original) The device of claim 47, wherein the memory comprises random access memory.

49. (Original) The device of claim 47, wherein the memory comprises read-only memory.

50. (Original) The device of claim 47, wherein the memory has stored therein program code for a multipoint communications protocol.

51. – 86. (Canceled)

87. (Currently Amended) ~~The computer-readable storage medium of claim 86, further comprising~~ A computer-readable storage medium having a computer executable instructions stored therein that when executed by a processor control a master transceiver, said computer executable instructions, comprising:

first logic configured to transmit first information in a first modulation method for communication;

second logic configured to transmit a first sequence to notify of a change from said first modulation method to a second modulation method;

third logic configured to transmit second information in said second modulation method; and

Rembrandt Wireless
Ex. 2012
Apple Inc. v. Rembrandt Wireless Technologies, LP, IPR2020-00033 **IPR2020-00036 Page 00770**
Page 770

fourth logic configured to transmit a second sequence after the second information is transmitted, wherein the second sequence is transmitted in the first modulation method and indicates that communication has reverted to the first modulation method.

88. – 93. (Canceled)

94. (Currently Amended) The computer-readable storage medium of claim 87 ~~86~~, wherein the first transceiver is configured to transmit the second sequence according to a specific time interval.

95. (Currently Amended) ~~The computer-readable storage medium of claim 86,~~ A computer-readable storage medium having a computer executable instructions stored therein that when executed by a processor control a master transceiver, said computer executable instructions, comprising:

first logic configured to transmit first information in a first modulation method for communication;

second logic configured to transmit a first sequence to notify of a change from said first modulation method to a second modulation method;

third logic configured to transmit second information in said second modulation method; and

fourth logic configured to transmit a second sequence after the second information is transmitted, wherein the first transceiver is configured to transmit the second sequence according to a particular quantity of data.

96. (Currently Amended) The computer-readable storage medium of claim 87 ~~11~~, further comprising program code for the first modulation method and the second modulation method.

97. (Currently Amended) The computer-readable storage medium of claim 87 ~~11~~, further comprising program code for a multipoint communications protocol.

98. – 100. (Canceled)

Rembrandt Wireless
Ex. 2012
Apple Inc. v. Rembrandt Wireless Technologies, LP, IPR2020-00033 **IPR2020-00036 Page 00771**
Page 771

101. (New) The device of claim 1, wherein the transceiver is configured to be the master.

102. (New) The device of claim 1, wherein the first information in the first portion indicates the first modulation method when the intended destination is a first type of receiver and indicates the second modulation when the intended destination is a second type of receiver.

103. (New) The device of claim 102, wherein the second type of receiver differs from the first type of receiver at least by the second type of receiver being designated for transmitting in the second modulation method.

104. (New) The device of claim 102, wherein the second type of receiver differs from the first type of receiver at least by the second type of receiver being operable to ignore transmissions intended for the first type of receiver.

105. (New) The device of claim 104, wherein the intended destination ignores transmissions in the second modulation when the intended destination is the first type of receiver.

106. (New) The device of claim 104, wherein the intended destination ignores transmissions in the first modulation when the intended destination is the second type of receiver.

107. (New) The device of claim 104, wherein the intended destination is the first type of receiver and unable to demodulate the second modulation method.

108. (New) The device of claim 102, wherein the transceiver is configured to receive data from the intended destination in the first modulation method when the intended destination is the first type of receiver.

Rembrandt Wireless
Ex. 2012
Apple Inc. v. Rembrandt Wireless Technologies, LP, IPR2020-00033 **IPR2020-00036 Page 00772**
Page 772

109. (New) The device of claim 102, wherein the transceiver is configured to receive data from the intended destination in the second modulation method when the intended destination is the second type of receiver.

110. (New) The device of claim 1, the transceiver is configured to transmit a third sequence, according to the first modulation method, at a time after the second sequence is transmitted.

111. (New) The device of claim 1, wherein the transceiver transmits data modulated according to either the first modulation method or the second modulation method at any given point in time when the transceiver is transmitting.

112. (New) The device of claim 20, wherein transmission of the second data is according to a particular quantity of data.

113. (New) The device of claim 28, wherein transmission of the second data is according to a specific time interval.

114. (New) The device of claim 28, further comprising a transmitter configured to transmit the first data and the second data.

115. (New) The device of claim 28, wherein the memory has stored therein program code for the first modulation method and the second modulation method.

116. (New) The device of claim 28, wherein the memory comprises random access memory.

117. (New) The device of claim 28, wherein the memory comprises read-only memory.

118. (New) The device of claim 28, wherein the memory has stored therein program code for a multipoint communications protocol.

Rembrandt Wireless
Ex. 2012
Apple Inc. v. Rembrandt Wireless Technologies, LP, IPR2020-00033 **IPR2020-00036 Page 00773**
Page 773

119. (New) The computer-readable storage medium of claim 87, wherein the first transceiver is configured to transmit the second sequence according to a particular quantity of data.

120. (New) The computer-readable storage medium of claim 95, wherein the first transceiver is configured to transmit the second sequence according to a specific time interval.

121. (New) The computer-readable storage medium of claim 95, further comprising program code for the first modulation method and the second modulation method.

122. (New) The computer-readable storage medium of claim 95, further comprising program code for a multipoint communications protocol.

123. (New) A communication device capable of communicating according to a master/slave relationship in which a slave message from a slave to a master occurs in response to a master message from the master to the slave, the device comprising:

a transceiver, in the role of the master according to the master/slave relationship, capable of transmitting using at least two types of modulation methods, wherein the at least two types of modulation methods comprise a first modulation method and a second modulation method, wherein the second modulation method is of a different type than the first modulation method, and wherein the ~~first~~ transceiver is configured to transmit messages with:

a first sequence, in the first modulation method, that indicates at least which of the first modulation method and the second modulation method is used for modulating a second sequence, wherein, in at least one message, the first sequence indicates an impending change from the first modulation method to the second modulation method, and wherein the at least one message is addressed for an intended destination of the second sequence, and

the second sequence, modulated in accordance with the modulation method indicated by the first sequence and, in the at least one message, modulated using ~~in~~ the second modulation method, wherein the second sequence is transmitted after the first ~~data~~ sequence.

Rembrandt Wireless
Ex. 2012
Apple Inc. v. Rembrandt Wireless Technologies, LP, IPR2020-00033
Page 774

124. (New) The device of claim 123, wherein the transceiver is configured to transmit a third sequence after the second sequence, wherein the third sequence is transmitted in the first modulation method and indicates that communication from the master to the slave has reverted to the first modulation method.

125. (New) The device of claim 123, wherein the transceiver is configured to transmit the second sequence according to a specific time interval.

126. (New) The device of claim 123, wherein the transceiver is configured to transmit the second sequence according to a particular quantity of data.

127. (New) The device of claim 123, further comprising a processor and a memory, wherein the memory has stored therein instructions that when executed by the processor cause the transceiver to transmit the first sequence and the second sequence.

128. (New) The device of claim 127, wherein the memory has stored therein program code for the first modulation method and the second modulation method.

129. (New) The device of claim 127, wherein the memory comprises random access memory.

130. (New) The device of claim 127, wherein the memory comprises read-only memory.

131. (New) The device of claim 127, wherein the memory has stored therein program code for operating the transceiver in a multipoint master/slave relationship.

132. (New) The device of claim 123, wherein the first communication from the master to the slave is a poll in accordance with a multipoint communications relationship, wherein the poll indicates that the master has selected the slave for transmission.

133. (New) The device of claim 123, wherein the transceiver is configured to be the master.

Rembrandt Wireless
Ex. 2012
Apple Inc. v. Rembrandt Wireless Technologies, LP, IPR2020-00033 **IPR2020-00036 Page 00775**
Page 775

134. (New) The device of claim 123, wherein the first information in the first portion indicates the first modulation method when the intended destination is a first type of receiver and indicates the second modulation when the intended destination is a second type of receiver.

135. (New) The device of claim 134, wherein the second type of receiver differs from the first type of receiver at least by the second type of receiver being designated for transmitting in the second modulation method.

136. (New) The device of claim 134, wherein the second type of receiver differs from the first type of receiver at least by the second type of receiver being operable to ignore transmissions intended for the first type of receiver.

137. (New) The device of claim 136, wherein the intended destination ignores transmissions in the second modulation when the intended destination is the first type of receiver.

138. (New) The device of claim 136, wherein the intended destination ignores transmissions in the first modulation when the intended destination is the second type of receiver.

139. (New) The device of claim 136, wherein the intended destination is the first type of receiver and unable to demodulate the second modulation method.

140. (New) The device of claim 134, wherein the transceiver is configured to receive data from the intended destination in the first modulation method when the intended destination is the first type of receiver.

141. (New) The device of claim 134, wherein the transceiver is configured to receive data from the intended destination in the second modulation method when the intended destination is the second type of receiver.

Rembrandt Wireless
Ex. 2012
Apple Inc. v. Rembrandt Wireless Technologies, LP, IPR2020-00033 **IPR2020-00036 Page 00776**
Page 776

142. (New) The device of claim 123, the transceiver is configured to transmit a third sequence, according to the first modulation method, at a time after the second sequence is transmitted.

143. (New) The device of claim 123, wherein the transceiver transmits data modulated according to either the first modulation method or the second modulation method at any given point in time when the transceiver is transmitting.

144. (New) The device of claim 127, wherein the memory comprises an erasable programmable read-only memory.

145. (New) The device of claim 11, wherein the memory comprises an erasable programmable read-only memory.

146. The device of claim 20, wherein the memory comprises an erasable programmable read-only memory.

147. (New) The device of claim 28, wherein the memory comprises an erasable programmable read-only memory.

148. (New) The device of claim 47, wherein the memory comprises an erasable programmable read-only memory.

Rembrandt Wireless
Ex. 2012
Apple Inc. v. Rembrandt Wireless Technologies, LP, IPR2020-00033 **IPR2020-00036 Page 00777**
Page 777

Amendments to the Drawings

The attached sheets of drawings include replacement FIG. 8. The sheets, which include new FIG. 8, replace the original sheets.

Attachment: Replacement Sheets 1-8

Rembrandt Wireless
Ex. 2012
Apple Inc. v. Rembrandt Wireless Technologies, LP, IPR2020-00033 **IPR2020-00036 Page 00778**
Page 778

REMARKS

Claims 1-2, 9-15, 18, 20, 27-33, 37-38, 45-50, 87, 94-97, and 101-148 are pending in the present application.

Claims 3-8, 16-17, 19, 21-26, 34-36, 39-44, 51-86, 88-93, and 98-100 have been canceled.

Claims 1-2, 9-15, 18, 20, 27-33, 37-38, 45-46, 87, and 94-97 have been amended for clarification.

Claims 101-148 have been added. Support for the claim amendments and new claims can be found throughout the specification, for example paragraphs [0031] – [0035] and [0048]. No new matter has been added.

Allowable Subject Matter

Applicant thanks Examiner Ha for the indication that claims 1-18, and 37-57 are allowed (office action, p. 7). Applicant has further amended claims 1-2, 9-15, 18, 37-38, and 45-46 with additional recitations to more precisely claim the subject-matter. For example, the language of independent claim 1 has been clarified to refer to two *types* of modulation methods, *i.e.*, different families of modulation techniques, such as the FSK family of modulation methods and the QAM family of modulation methods. Support for the clarifying amendments can be found throughout the specification, for example [0024], [0025] and [0031] – [0036].

Applicant thanks Examiner Ha for the indication that claims 20, 28, 36, 59, 67, 70-71, 73, 81, 84, 85, 87, 95, and 100 would be allowable if rewritten in independent form including all of the limitation of the base claim and any intervening claims (office action, p. 7). Accordingly, claims 20, 28, 87, and 95 have been rewritten in independent form.

Claims 3-8, 16-17, 19, 21-26, 34-36, 39-44, 51-86, 88-93, and 98-100 have been canceled.

Accordingly, Applicant respectfully submits that pending claims 1-2, 9-15, 18, 20, 27-33, 37-38, 45-50, 87, and 94-97, are allowable.

Rembrandt Wireless
Ex. 2012
Apple Inc. v. Rembrandt Wireless Technologies, LP, IPR2020-00033
Page 779
IPR2020-00036 Page 00779

New Claims

New claims 101-148 have been added. New dependent claims 101-111 depend from allowed claim 1. Therefore, Applicant respectfully submits claims 101-111 define over the asserted prior art for at least the same reasons as allowed claim 1.

Applicant has added new dependent claims 112-122 that correspond to subject matter that was previously presented in dependent claim form. The new claims 112-122 have been added to depend from allowable dependent claims that have been rewritten into independent form (*i.e.* claims 20, 28, 87, and 95). Accordingly, Applicant respectfully submits that claims 112-122 are allowable.

Furthermore, Applicant has added new independent claim 123 and corresponding dependent claims 124-144. Applicant respectfully submits that new claim 123 recites patentable subject matter not disclosed by the asserted references, and is therefore in condition for allowance. In addition, Applicant also respectfully submits that dependent claims 124-144, which depend from new claim 123, are also patentable for at least the same reason.

Applicant has added new dependent claims 145-148 which recite "wherein the memory comprises an erasable programmable read-only memory." Support for new claims 145-148 can be found throughout the specification, for example paragraph [0048]. Applicant submits that new claims 145-148 are allowable for at least the reason that they depend either directly or indirectly from claims 1, 20, 28, and 37, which are now presented in allowable form.

Therefore, Applicant respectfully submits that new claims 101-148 are in condition for allowance.

Replacement Drawings

Applicant has included replacement sheets 1-8 including replacement FIG. 8. New FIG. 8 corresponds to FIG. 4A & 4B of U.S. Provisional Application 60/067,562 (the "Provisional Application"), which is incorporated into the present application by reference. Original FIG. 8 has been removed. Applicant respectfully requests acceptance of Replacement Sheets 1-8.

Rembrandt Wireless
Ex. 2012
Apple Inc. v. Rembrandt Wireless Technologies, LP, IPR2020-00033 **IPR2020-00036 Page 00780**
Page 780

Amendments to the specification

Applicant has made certain amendments to the specification. Applicant submits that the amendments contain no new matter.

Applicant has included a replacement summary section and a replacement abstract. The MPEP suggests that the applicant modify the brief summary of the invention and restrict the descriptive subject matter "so as to be in harmony with the claims." *MPEP 1302.01,* General Review of Disclosure. Accordingly, Applicant has deleted paragraphs [0042] – [0046]. Applicant has amended [0022], [0025] and [0027] to describe a new FIG. 8, which was included in the replacement sheets discussed above. Support for the amended paragraphs can be found throughout the specification and the Provisional Application. For example, support for the amendments may be found in the Summary Description section on page 4 of the Provisional Application and paragraphs [0025] – [0027] of the present application.

Claim Objections

Claims 1-18, 37-57, and 96-100 stand objected to for antecedent basis and dependency. Applicant has amended or canceled the claims to address the objections. Claims 20, 28, 36, 59, 67, 70-71, 73, 81, 84, 85, 87, 95, and 100 stand objected to as being dependent upon a rejected base claim. As discussed above, claims 20, 28, 87, and 95 have been rewritten in independent form. Claims 36, 59, 67, 70-71, 73, 81, 84, 85, and 100 have been cancelled.

Accordingly, Applicant respectfully requests the objections to the claims be withdrawn.

Claim Rejections under 35 U.S.C. §§ 102 & 103

Claims 19, 21, 23-27, 29, 34, 86, 88-94, and 96 stand rejected under 35 U.S.C. § 102(b) as allegedly being anticipated by U.S. Patent No. 5,537,398 to Siwiak. Claims 30-33, 96, and 97 stand rejected under 35 U.S.C. § 103(a) as allegedly being unpatentable over Siwiak. Claims 22, 35, 58, 60-66, 69, 72, 74-80, 82, and 83 stand rejected under 35 U.S.C. § 103(a) as allegedly being unpatentable over Siwiak in view of U.S. Patent No. 6,125,148 to Frodigh *et al.*

Rembrandt Wireless
Ex. 2012
Apple Inc. v. Rembrandt Wireless Technologies, LP, IPR2020-00033 **IPR2020-00036 Page 00781**
Page 781

Claims 19, 21-26, 34, 58, 60-65, 72, 74-79, 83, 86, 88-93, and 98-99 have been cancelled. As discussed above, claims 27, 29, 94, and 96-97 have been amended to depend from a claim indicated as allowable.

Accordingly, Applicants respectfully request the rejections under 35 U.S.C. §§ 102 and 103 be withdrawn.

Conclusion

In light of the above amendments and remarks, Applicant respectfully submits that the present application is in condition for allowance, and Applicant respectfully requests a Notice of Allowance for the pending claims 1-2, 9-15, 18, 20, 27-33, 37-38, 45-50, 87, 94-97, and 101-148.

Date: March 1, 2011

/Michael A. Koptiw/
Michael A. Koptiw
Registration No. 57,900

Woodcock Washburn LLP
Cira Centre
2929 Arch Street, 12th Floor
Philadelphia, PA 19104-2891
Telephone: (215) 568-3100
Facsimile: (215) 568-3439

Rembrandt Wireless
Ex. 2012
Apple Inc. v. Rembrandt Wireless Technologies, LP, IPR2020-00033
Page 782
IPR2020-00036 Page 00782

Exhibit G

JOHNS HOPKINS
SHERIDAN LIBRARIES &
UNIVERSITY MUSEUMS

DECLARATION OF JON MEARS

I, Jon Mears, declare as follows:

1. I am a staff member of the Milton S. Eisenhower Library, which is located at Johns Hopkins University. I have personal knowledge of the facts listed below.

2. The Milton S. Eisenhower Library is open to the public. Any member of the public may enter the Milton S. Eisenhower Library and view the periodicals in the library's collection.

3. The document attached as Exhibit A is a scan of a portion of a periodical that I located in the Milson S. Eisenhower Library's collection of periodicals. Specifically, Exhibit A shows the article titled "Communication Protocols for Embedded Systems" as in appears in the November 1994 issue of *Embedded Systems Programming*. This is volume 7, issue 11 of this publication.

4. The stamp on the back cover of the November 1994 issue of *Embedded Systems Programming* reads "OCT 28 1994." It is the regular practice of the Milton S. Eisenhower Library to stamp periodicals with the date the periodical is added to the library's catalog. Once a periodical is in the library's catalog, it is made available in the library for viewing by any visitor of the library.

I declare under penalty of perjury that the foregoing is true and correct.

Dated: March 11, 2014

Jon Mears

Jon Mears

Samsung Ex. 1218
(Samsung v. Rembrandt)

EXHIBIT A

NUMBER 11 U.S. $3.95 CANADA $4.95
NOV 1994 A MILLER FREEMAN PUBLICATION

mbedded Systems
ROGRAMMING

Ada Achieves Orbit

Cruising with Ada
Basics of Networking
Containers in C++
Plauger on Prediction

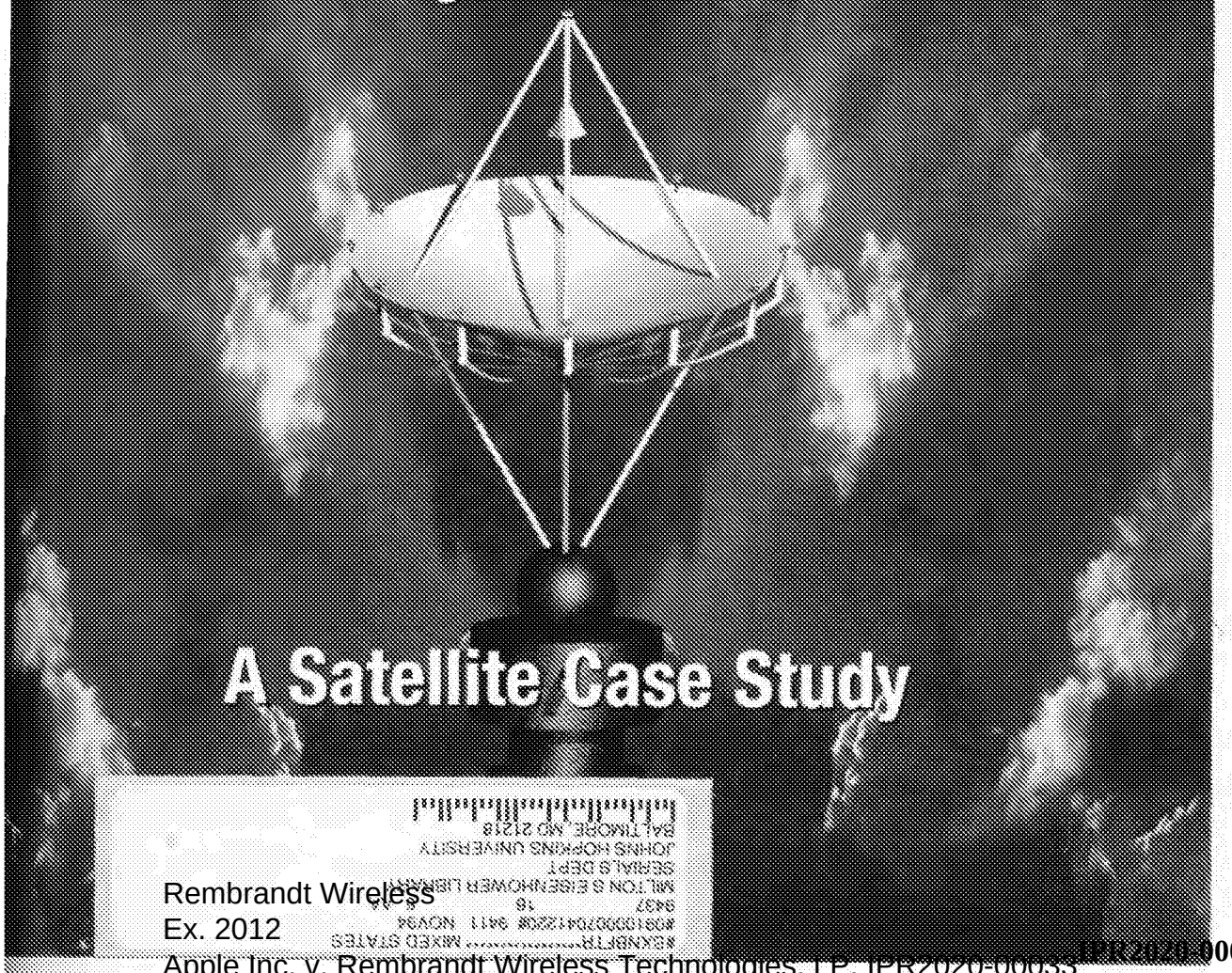

A Satellite Case Study

PERIODICALS
JOHNS HOPKINS UNIVERSITY
SERIALS DEPT
MILTON S EISENHOWER LIBRARY
9437 16 $3.
*KSKNBFTH..... MIXED STATES
*09100070412208 9411 NOV94

Rembrandt Wireless
Ex. 2012
Apple Inc. v. Rembrandt Wireless Technologies, LP, IPR2020-00033
Page 785
IPR2020-00036 Page 00785
Exhibit 1218 03/12

Embedded Systems Programming
VOL. 7 NO. 11 NOVEMBER 1994

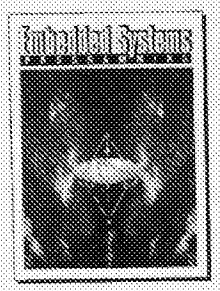

ON THE COVER:

If your geosynchronous service calls are getting too expensive, try shifting to Ada. Cover by Rupert Adley.

Table of Contents

FEATURES

12 Ada for Space Applications

RICHARD RIEHLE. Like C++ before it, Ada is ...s criticisms behind and finding acceptance in a ... of embedded applications. This case study ... the trials and triumphs of a satellite design ... decision to shift to Ada.

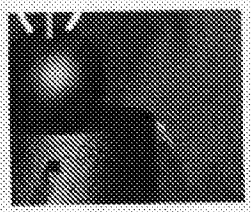

18 Cruising with Ada

...WO-WHILE JONES. Too many developers let their ... dictate their designs. In this system design mani-... Jones looks at the dangers of inappropriate design ...odologies and the advantages of Ada as a proto-...ing tool for a typical microcontroller application.

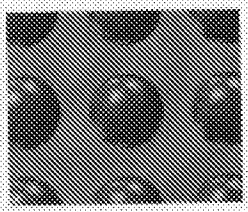

46 Communication Protocols for Embedded Systems

BHARGAV UPENDER AND PHILIP KOOPMAN. ...e networking architectures were designed without ...bedded or real-time concerns in mind. Here's an ...view of the tradeoffs in choosing different embed-...d networking protocols.

60 Containers and Templates

BRUCE ECKEL. Container classes are quite useful. ...plementing them, however, often requires template ...ment. In keeping with our emphasis on "under the ...hood" details, this month's introduction to C++ contain-...rs also an exploration in the use of templates.

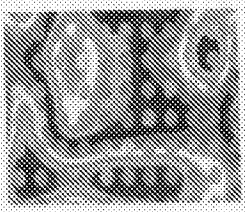

COLUMNS + DEPARTMENTS

7 #include
Dangerous Curves

9 Real-Time
Competitive Urges
by Tyler Sperry

82 Embedded Marketplace

88 Advertiser Index

89 Break Points
I Consultant, Part II
by Jack G. Ganssle

93 State of the Art
What Happens Next?
by P.J. Plauger

EMBEDDED SYSTEMS PROGRAMMING (ISSN 1040-3272) is published monthly by Miller Freeman Inc., 600 Harrison St., San Francisco, CA 94107, (415) 905-2200. Please direct advertising and ...ion to this address. SUBSCRIPTION RATE for the United States is $49.95 for 12 issues. Canadian/Mexican orders must be accompanied by payment in U.S. funds with additional postage ...year. All other foreign subscriptions must be prepaid in U.S. funds with additional postage of $15 per year for surface mail and $40 per year for airmail. POSTMASTER: All subscription orders, ...and address changes should be sent to EMBEDDED SYSTEMS PROGRAMMING, P.O. Box 429046, Palm Coast, FL 32142-0046. For customer service, telephone toll-free (800) 829-5537. ...allow four to six weeks for change of address to take effect. Second-class postage is paid at San Francisco, CA and additional mailing offices. EMBEDDED SYSTEMS PROGRAMMING is a ...of Miller Freeman Inc., 600 Harrison St., San Francisco, CA 94107. All material published in EMBEDDED SYSTEMS PROGRAMMING is copyright © 1994 by Miller Freeman Inc. All rights ...reproduction in whole or in part without permission of EMBEDDED SYSTEMS PROGRAMMING is forbidden without permission. EMBEDDED SYSTEMS PROGRAMMING is available on microfilm/fiche ...University Microfilms, Inc., 300 N. Zeeb Rd., Ann Arbor, MI 48106, (313) 761-4700.

Rembrandt Wireless
Ex. 2012
Apple Inc. v. Rembrandt Wireless Technologies, LP, IPR2020-00036
Page 786

Exhibit 1218 04/12

by BHARGAV UPENDER and PHILIP KOOPMAN

Communication Protocols for Embedded Systems

There's more to connecting multiple CPUs than just stringing wires or cable. Your choice of network protocol, in particular, will determine system performance.

The past few years have seen a growing trend to dramatically increase the embedded electronics content of automobiles, elevators, building climate control systems, jet aircraft engines, and other traditionally electro-mechanically controlled systems. In many large systems, this increasing electronics content is accompanied by a proliferation of subsystems with separate CPUs.

The increase in the number of processors in a system is often driven by computation and I/O growth. In some development environments, the increase may also be driven by a need to ease system integration burdens among multiple design groups or to provide system flexibility through "smart sensors" and "smart actuators." Whatever the reasons, once there is more than one CPU in a system, there must be some means of communication to coordinate action.

While some high-end embedded systems communicate over a VME backplane or similar arrangement, the embedded systems we're working on use physically distributed CPUs involving some sort of local area network (LAN), also called a multiplexed network or a communication bus. At the heart of the LAN is the media access protocol, which picks the next transmitter for access to the shared network medium, typically a wire, fiber, or RF frequency.

In this article, we will discuss special considerations for networked real-time embedded systems, and look at several media access protocols that demonstrate fundamentally different ways of accessing the shared medium. The protocols are: connection-oriented protocols, polling, time division multiple access (TDMA), token ring, token bus, binary countdown, carrier sense multiple access with collision detection (CSMA/CD), and carrier sense multiple access with collision avoidance (CSMA/CA). For each of these we will evaluate the strengths and weaknesses against special considerations. A protocol tradeoff chart will enable you to select a protocol to fit your needs. While no protocol is perfect for all purposes, a variation of CSMA/CA offers the most versatility for many embedded systems.[1]

SPECIAL CONSIDERATIONS

In practice, we have found that embedded real-time systems require high efficiency, deterministic latency, operational robustness, configuration flexibility, and low cost per node.

Because cost limits the available bandwidth available to many embedded

Kenne Fauvonder

Rembrandt Wireless
Ex. 2012
Apple Inc. v. Rembrandt Wireless Technologies, LP, IPR2020-00033
Exhibit 1218 05/12
IPR2020-00036 Page 00787

low protocol efficiency (message bits divided compared to raw network bandwidth) is very important. The embedded systems we have studied are characterized by a predominance of short periodic messages. So, an obvious optimization is to reduce overhead bits used for message packaging and framing. (It is not unusual for eight bits of data to be packed in a message that is 32 or even 64 bits long.)

Once message overhead has been reduced as much as possible, media access overhead must be reduced. For the most part, this is accomplished by minimizing the network bandwidth consumed by arbitration (such as passing a token or resolving collision conflicts). Because worst-case behavior is typically important, efficiency should be evaluated for both light and heavy traffic. For example, CSMA/CD (often used in workstation LANs) is highly efficient for light traffic but gives poor performance if heavily loaded, while token bus protocols have the reverse properties.

Determinacy, or the ability to calculate worst-case response time, is important for meeting the real-time constraints of many embedded control applications. A prioritization capability is usually included in systems to improve determinacy of messages for time-critical tasks such as exception handling and high-speed loop control. Priorities can be assigned by node number or message type. Additionally, protocols can support local or global priority mechanisms. In local prioritization, each node gets a turn at the network in sequence and sends its highest priority queued message (thus potentially forcing a very high-priority message to wait for other nodes to have their turns first). In global prioritization, the highest priority message in the entire system is always transmitted first. This mechanism, which is fundamentally enabled by the media access protocol, is highly desirable for many embedded applications.

Because worst-case behavior is typically important, efficiency should be evaluated for both light and heavy traffic.

Many embedded applications require robust operation under extreme conditions. We call a protocol robust if it can quickly detect and recover from errors (duplicate or lost tokens, for example), added nodes, and deleted nodes. In some systems, it's important to quickly recover from a reset or power glitch that forces a restart of the network.

Varied operating environments may dictate use of a media access protocol that is flexible in supporting multiple media and mixed topologies. Portions of a system may require expensive fiber in noisy environments, while other portions can tolerate low-cost twisted pair wires in benign environments. A bus topology may be optimum for wires, but a ring or star topology may be needed for fiber.

A vital consideration is the cost per node. In this article, the order of the media access discussion progresses from very simple to complex, high-performance protocols. Simple protocols require less hardware and software resources and are therefore likely to be less expensive. For extremely cost-sensitive high-volume applications, these protocols are good candidates. However, for growing applications, more advanced protocols provide a stronger foundation. In general, costs are decreasing over time due to

Rembrandt Wireless
Ex. 2012
Apple Inc. v. Rembrandt Wireless Technologies, LP, IPR2020-00033
Page 788
IPR2020-00036 Page 00788

Exhibit 1218 06/12

advances in IC manufacturing technology and the increasing availability of off-the-shelf protocols. Consequently, we envision advanced cost-effective protocols used in many embedded applications.

MEDIA ACCESS PROTOCOLS

Now that we have a feel for the issues in embedded networks, let's examine various commonly available media access protocols. While many variations and combinations are possible, we'll discuss the plain versions of each protocol.

Before LANs became popular, connection-oriented protocols were heavily used to connect remote terminals to mainframes. These protocols support only two nodes per physical transmission medium and are typically connected via modem with serial lines. Figure 1 shows an example of a four-processor network using this protocol. Communication between nodes not physically connected requires multiple transmissions through intermediate nodes. These protocols are deterministic between directly connected nodes. For indirectly connected nodes, latency can be high.

For an embedded system with modest communication requirements, this might be a cost-effective protocol (readily available hardware and software from mature technology). For demanding applications, nodes that handle a lot of pass-through traffic can become swamped, prohibiting use of low-cost nodes in a large system. Sometimes, this type of protocol is combined with a more complex communication system to provide backward compatibility to older systems or to allow simple remote modem access to the system (such as BACnet). This type of protocol is used by the X.25 public network standard (network services offered by telephone companies) and IBM's system network architecture (SNA).[2]

Polling is one of the more popular protocols for embedded systems because of its simplicity and determinacy. In this protocol, a centrally assigned master periodically sends a polling message to the slave nodes, giving them explicit permission to transmit on the network.

Figure 2 shows the polling order (dotted lines) of a simple four-node bus network. The majority of the protocol software is stored in the master and the communication work of slave nodes is minimal (therefore, the network costs tend to be smaller). This protocol is ideal for a centralized data-acquisition system where peer-to-peer communication and global prioritization are not required. However, the single-point-of-failure from the master node (or the cost of installing redundant master hardware) is often unacceptable. Additionally, the polling process consumes considerable bandwidth regardless of network load (poor efficiency). These protocols are standardized by the military (MIL-STD-1553B) for aircraft [illegible] communications. Some variations of protocol allow inter-slave communication through the master and [illegible] improved robustness by using [illegible] masters (as does Profibus).

TIME DIVISION MULTIPLE ACCESS

Time division multiple access (TDMA) is heavily used in satellite communications [illegible] applicable to LANs as well. In this protocol, a network master [illegible] a frame sync signal before [illegible] of messages to synchronize [illegible] all the nodes. After the sync, each transmits during its unique [illegible] time slice, as shown in Figure [illegible]. Performance is similar to polling with greater efficiency at heavy [illegible]

FIGURE 1
An example network using connection-oriented protocols.

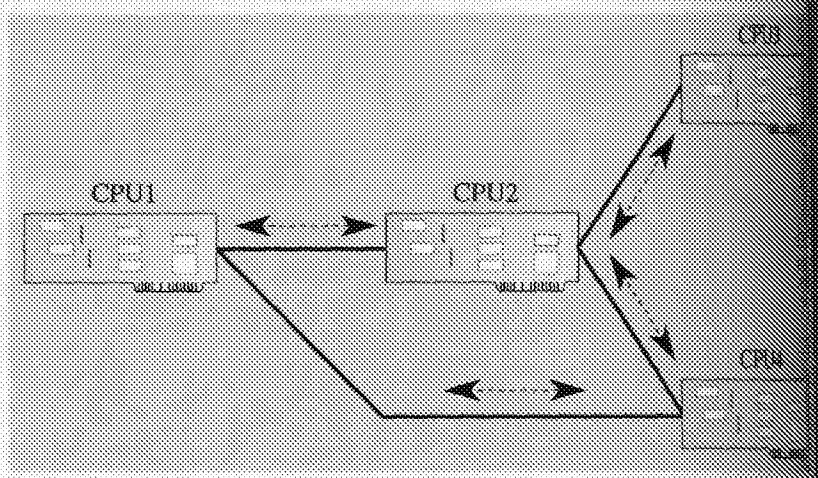

FIGURE 2
Master node sequentially polling slave nodes for information.

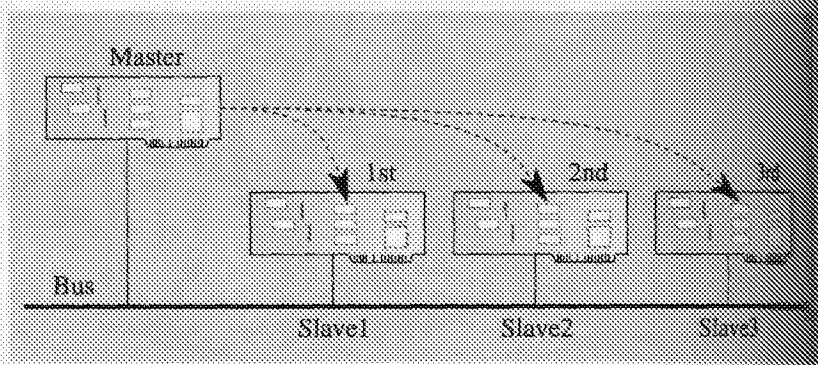

Rembrandt Wireless
Ex. 2012
Apple Inc. v. Rembrandt Wireless Technologies, LP, IPR2020-00033
Page 789
Exhibit 1218 07/12

IPR2020-00036 Page 00789

due to elimination of individual polling messages. Costs for slave nodes are greater with TDMA than with polling, because each slave node must have a stable time base to measure slices. An additional weakness for TDMA is the need for fixed-length messages to fit into time slices. In some TDMA variations, unused slices are truncated by tacit agreement among nodes. Time-based protocols have been popular in aerospace applications. For example, digital autonomous terminal access communications (DATAC) is being used by NASA and Boeing.

In a token ring network, the nodes are connected in a ring-like structure using point-to-point links as shown in Figure 4. A special token signal is passed from node to node around the ring. When a node has something to send, it stops the token circulation, sends its message all the way around the ring, and passes the token on. Since worst-case token waiting time can easily be calculated, this protocol is deterministic. Under light traffic, token ring has moderate token passing overhead. However, the protocol provides efficient throughput under heavy traffic conditions since idle token passing is minimized.

A frequent implementation strategy is to have a one-bit delay at each node, so a token can visit all nodes in N+T bit times, where N is the number of nodes and T is the number of bits in the token. Global prioritization is accomplished by altering the priority field of the token as it visits the nodes. This field enables only the nodes with a high priority to send messages on the network. Initialization of the token message and detection of accidentally duplicated or lost tokens adds complexity and cost to the protocol.

A break in the cable or a failed node disabling the entire network is a common concern for many users. Consequently, node bypass hardware and dual rings are used to address this concern at additional cost. Because the ring connections themselves are point-to-point, it is well suited for fiber optics. So, many LANs and wide area networks (WANs) are moving to this type of protocol. For example, fiber distributed data interface (FDDI) uses dual counter-rotating rings to achieve higher reliability than bus or star topologies.

TOKEN BUS

The operation of a token bus is very similar to a token ring—a token is passed from node to node in a virtual ring as in Figure 5. The holder of the token has the access to the network. Like token ring, token bus works well under heavy traffic with a high degree of determinacy. However, token bus broadcasts the message simultaneously to all nodes instead of passing it bit-by-bit along a physical ring. The minimum time for a token to traverse the logical ring of nodes is thus N*T bit times instead of N+T bit times as in token ring (because there is no parallelism in the connections). This makes global prioritization of messages largely impractical.

Unlike unidirectional token ring, a break in the cable or a failed node does not necessarily disable the entire network. A lengthy reconfiguration process, where each node identifies its neighbors, is used to maintain the virtual ring when nodes are added or

FIGURE 3
The time slices of TDMA protocols.

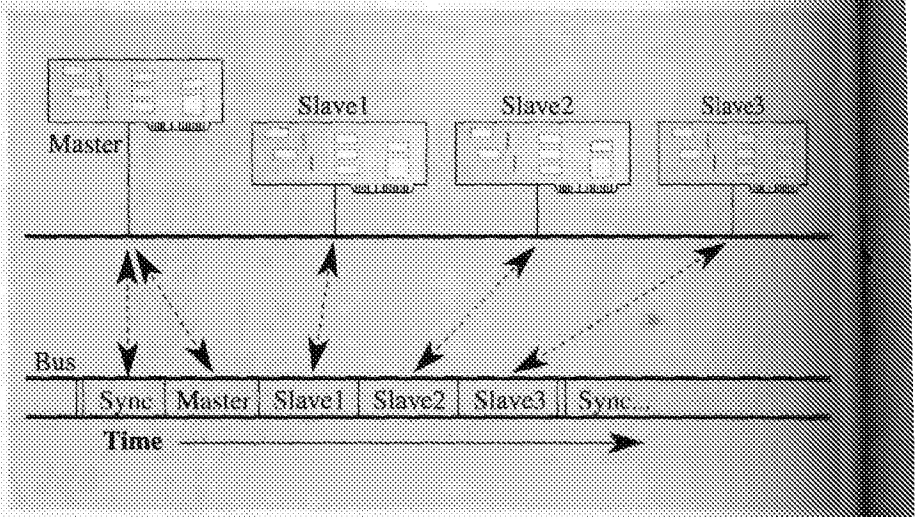

FIGURE 4
Token passing in the token ring networks.

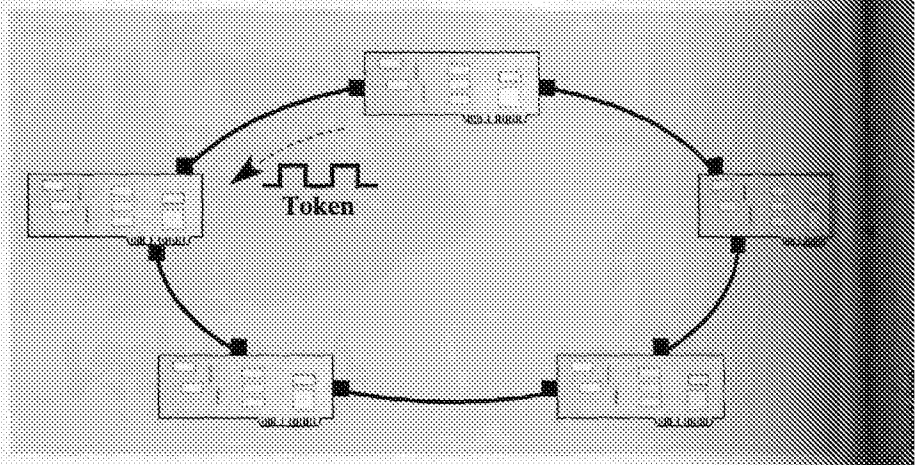

Rembrandt Wireless Technologies, LP, IPR2020-00033
Exhibit 1218 08/12
IPR2020-00036 Page 00790
Rembrandt Wireless
Ex. 2012
Appellant's Exhibit
Page 790

deleted from the network. Because bus-like topologies are well suited for manufacturing plants, manufacturing automation protocol (MAP) adopted this protocol. Additionally, attached resource computer network (ARCnet)[8] uses this protocol for LAN connectivity and process control. Adaptive Networks' PLC-192 power line carrier chip uses a hybrid token bus protocol: under light traffic, nodes dynamically join and leave from the logical ring—under heavy traffic, all nodes join the ring to maintain stability.

In binary countdown, also known as the bit dominance protocol, all nodes wait for an idle channel before transmitting a message. Competing nodes (transmitting simultaneously) resolve contention by broadcasting a signal based on their unique node identification value. The transmission medium must have the characteristic that one value (say, a "1") overrides the opposite value (a "0"). During this transmission, a node drops out of the competition if it detects a dominant signal opposite to its own, as shown in Figure 6. Thus, if a "1" signal is dominant, the highest numbered transmitting node wins the competition and gains ownership of the channel.

Global prioritization can be achieved by arbitrating over message ID values rather than the node IDs. Since the arbitration is part of the message, this protocol has good throughput and high efficiency. Additionally, the protocol is more robust because node configuration (transmission order) is not required, and inactive nodes are ignored. However, since all messages are prioritized, there is no simple way to guarantee equally fair access among all nodes under heavily loaded conditions. Also, some transmission techniques (such as current-mode transformer coupling commonly used in high-noise environments) aren't compatible with the bit dominance requirement. Using this protocol, Bosch developed the controller area network (CAN) specification for automotive [illegible] Society of Automotive Engineers standard SAE J-1850 also uses this protocol.

CARRIER SENSE MULTIPLE ACCESS

Carrier sense multiple access with collision detection (CSMA/CD) has been widely researched with a large number of published variations. In the simplest case, a node waits for the network to go idle before transmission (as in binary countdown). If multiple stations transmit almost simultaneously (within a round-trip transmission delay on the network), the messages collide, as in Figure 7. The nodes must detect this collision and resolve it by waiting for a random time before retrying.

The key advantage to this protocol is that, in principle, it supports an unlimited number of nodes that don't require preallocated slots or inclusion in token passing activities. CSMA/CD allows nodes to enter and leave the network without requiring network initialization and configuration. For light traffic conditions, overhead is very small. However, under heavy traffic, the overhead is unbounded due to the probability of repeated collisions. Consequently, this protocol has poor determinacy and low efficiency. Furthermore, detecting collisions may require analog circuitry, adding to the system expense. In fact, if the network environment is very noisy or the wiring runs are long and of poor quality, collision detection may not work at all. The popular Ethernet protocol used in workstation LANs is based on this protocol.

Many hybrid protocols combine the light traffic efficiency of CSMA/CD with the heavy traffic efficiency of

FIGURE 5
Token passing in token bus protocols.

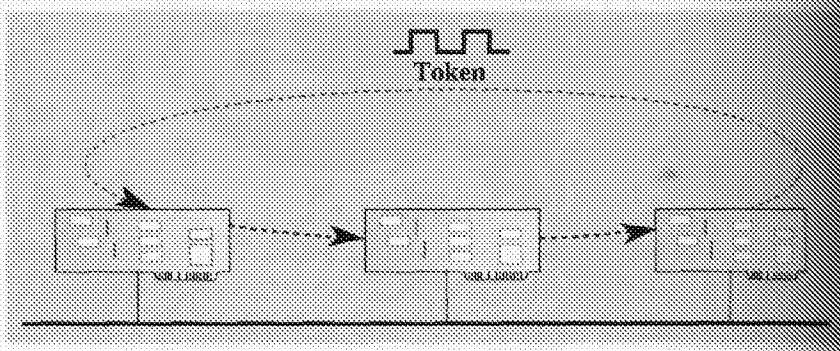

FIGURE 6
Arbitration in binary countdown protocols.

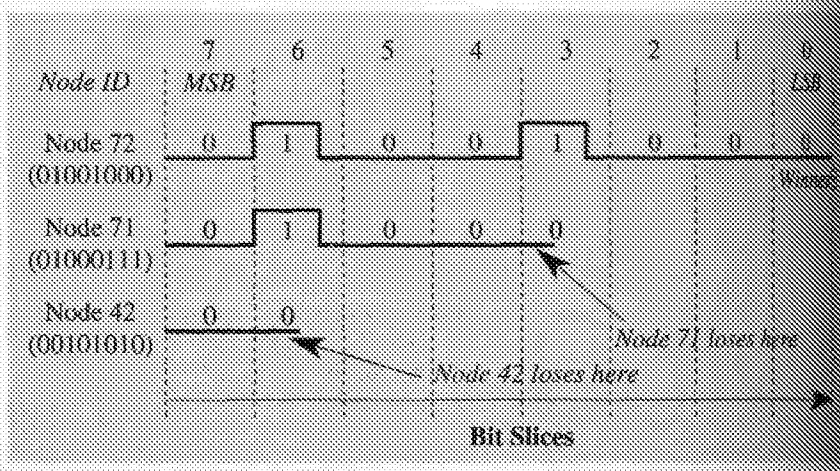

Rembrandt Wireless
Ex. 2012
Apple Inc. v. Rembrandt Wireless Technologies, LP, IPR2020-00033
Page 791

Exhibit 1218 09/12
IPR2020-00036 Page 00791

token-based protocols. The resulting protocols are often called carrier sense multiple access with collision avoidance (CSMA/CA). As in CSMA/CD, nodes transmit after detecting an idle channel. However, if two or more stations collide, a jam signal is sent on the network to notify all nodes of collision, synchronize clocks, and start contention time slots. Each contention time slot, typically just over a network round-trip propagation delay time, is assigned to a particular station. Each station is allowed to initiate transmission during its contention slot. Figure 8 shows a slot progression for a three node network. In this example, transmitters 2 and 3 collide and initiate a jam. Contention slots follow the jam signal. Since processor 1 has nothing to send, slot1 goes idle. Transmitter 2 starts sending its message during slot2. Other stations detect the message, and stop the slot progression.

After the end of the message, all nodes initiate new contention slots. However, to ensure fairness and determinacy, the slots are rotated (change positions) after each transmission. Additionally, the priority slots (pslots) can precede each slot progression to support global prioritization for high-priority messages. The network returns to an idle state when all the slots go unused.

The contention slots in CSMA/CA protocol help avoid collisions. In general, there are two distinct variations of CSMA/CA protocols. If the number of slots equals the number of stations, the protocol is called reservation CSMA (RCSMA). The RCSMA variation works efficiently under all traffic conditions.[6] However, because of the one-to-one relation of the node to the slot, RCSMA is not practical for a network with a large number of nodes. In another variation, the number of slots is less than the number of stations, and the slot assignments are randomly allocated to minimize collisions. Echelon's local operating network (LON) uses the latter variation and dynamically [illegible] of slots based on expected traffic prediction.[7] Unlike CSMA/CD, there are ways to eliminate the need for collision detection hardware, such as sending dummy messages that keep slots going in the absence of network traffic.

FIGURE 7
Collisions in CSMA/CD networks.

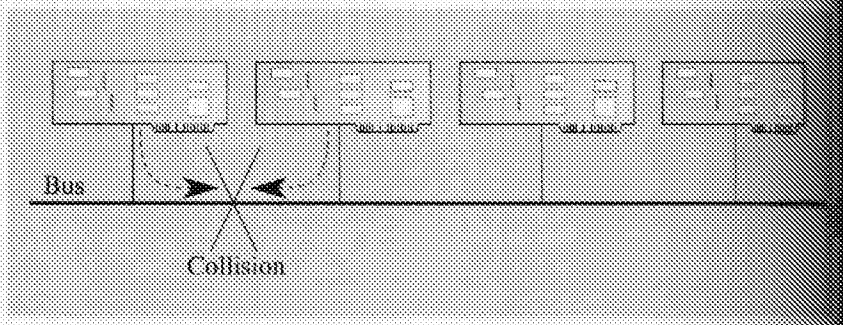

FIGURE 8
Slot progression in CSMA/CA protocols.

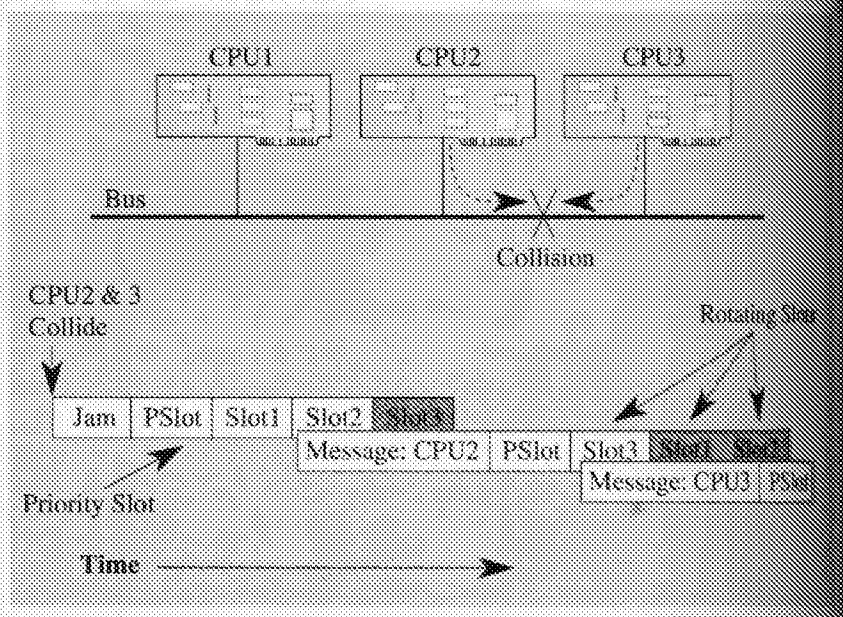

PROTOCOL TRADEOFFS

We have described the major media access protocols and noted clear differences. Table 1 summarizes some of the common traits and our assessment of their strengths and weaknesses for embedded real-time applications. The important points to take into consideration when evaluating alternatives are:

- Polling, TDMA, and connection-based protocols are simple, but may not provide sufficient flexibility for advanced systems.
- Token-based protocols are predictable, but can have high overhead and require complex software to maintain robustness.
- Binary count-down protocols rely heavily on the bit dominance characteristics of the physical medium.
- CSMA/CD is a poor choice for hard real-time systems with heavy traffic.

For our embedded systems, we have found that CSMA/CA, particularly RCSMA, is a good choice. While every application will no doubt have characteristics that are somewhat different

Rembrandt Wireless
Ex. 2012
Apple Inc. v. Rembrandt Wireless Technologies, LP, IPR2020-00033
Page 792
Exhibit 1218 10/12
IPR2020-00036 Page 00792

Replace Four Conventional PC/104 Modules with One SuperXT™ CMF8680 cpuModule™

Embedded PC/XT Controller with Intelligent Power Management

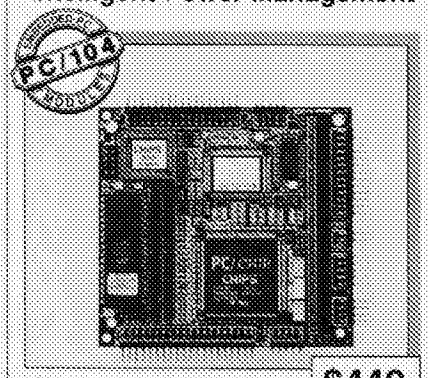

PC/104 Compliant
Actual Size: 3.6 x 3.8 x 0.6"

$449

- PC/XT compatibility with 286 emulation
- 14 MHz, 16-bit 8086 CPU
- +5V only; 1.6W at 14.3 MHz, 1W at 7.2 MHz
- Intelligent sleep modes, 0.1W in Suspend
- ROM-DOS and RTD enhanced BIOS
- Compatible with MS-DOS & real-time operating systems
- 1M bootable Solid State Disk & free software
- 4K-bit configuration EEPROM (2K for user)
- 2M on-board DRAM
- IDE & floppy interfaces
- CGA CRT/LCD controller
- Two RS-232 ports, one RS-485 port
- Parallel, XT keyboard & speaker ports
- Optional X-Y keypad scanning/PCMCIA interface
- Watchdog timer & real-time clock

Expand This Or Any PC/104 System with the

CM106 Super VGA Controller utilityModule™

- Mono/color STN & TFT flat panel support
- Simultaneous CRT & LCD operation
- Resolution to 1024 x 768 pixels
- Displays up to 256 colors

$223

Speed Product Development with the

DS8680 Development System

Your DS8680 includes the CMF8680, CM102 keypad scanning/PCMCIA, CM104 with 1.8" 85MB hard drive, CM106 SVGA controller & DM5406 12-bit, 100 kHz dataModule™ in an enclosure with external power supply, 3.5" floppy, keyboard, keypad, TB50 terminal board, SIGNAL*VIEW™, SIGNAL*MATH™, MS-DOS, SSD software & rtdLinx™ for just

$2950.

For more information on our PC/104 and ISA bus products, call today.

rtd®

Real Time Devices USA
200 Innovation Blvd. • P.O. Box 906
State College, PA 16803 USA
(814) 234-8087 / Fax: (814) 234-5218

Real Time Devices Scandinavia

Real Time Devices is a founder of the PC/104 Consortium

TABLE 1
Media access tradeoffs.

↑ Good – Ok ↓ Poor	Efficiency Light Traffic	Efficiency Heavy Traffic	Determinacy	Prioritization	Robustness	Physical Layer Flexibil.	Lay Cal ibil
Connection	–	↓	↑	–	↑	↓	–
Polling	↓	–	↑	↓	↓	↑	–
TDMA	↓	↑	↑	↓	↓	↑	↓
Token Ring	↑	↑	↑	↑	–	–	–
Token Bus	–	↑	↑	–	–	↑	–
Binary Cnt.	↑	↑	–	–	↑	↓	↑
CSMA/CD	↑	↓	↓	–	↑	↑	–
CSMA/CA	↑	↑	↑	↑	↑	↑	↑

than ours, this article's discussion of the special considerations and media access protocol strengths and weaknesses should allow you to select the best protocol to match your needs. We believe the electronic contents of embedded systems will continue to grow, and communication networks provide strong foundation for supporting this growth. ESP

Bhargav Upender is an associate research engineer at United Technologies Research Center. Currently, he is exploring novel architectures and supporting protocols for distributed embedded systems. He holds a BS in electrical engineering from the University of Connecticut and an MS in electrical engineering from Cornell University in New York. He can be contacted electronically at barg@utrc.utc.com.

Philip Koopman is a principal research engineer at United Technologies Research Center. He currently designs and evaluates architectures and communication protocols for a variety of embedded applications. He has previously worked as an embedded CPU architect and a Navy submarine officer. Koopman holds a BS and MS in computer engineering from Rensselaer Polytechnic Institute and a PhD in computer engineering from Carnegie Mellon University. He may be reached electronically at koopman@utrc.utc.com.

REFERENCES

1. Upender, B. P. and Koopman, P. J., *Embedded Communication Protocol Options*, San Jose, CA: Proceedings of the Embedded Systems Conference, October 1993.
2. Tanenbaum, A. S., *Computer Networks*, 2nd ed., Englewood Cliffs, NJ: Prentice-Hall, 1989.
3. Stallings, W. S., *Data and Computer Communications*, 3rd ed., New York: Macmillan, 1991.
4. Hoswell, Katherine S. and Thomas, George M., *ARCnet Fast LAN Primer*, Second Printing, Downers Grove, Illinois: Contemporary Control Systems Inc., 1988.
5. Bosch, CAN Specification, ver. 2.0, Robert Bosch GmbH, Stuttgart, 1991.
6. Chen and Li, *Reservation CSMA/CD: A Multiple Access Protocol for LANs*, IEEE Journal on Selected Areas in Communications, February 1989.
7. *Enhanced Media Access Control with Echelon's LonTalk Protocol*, LonWorks Engineering Bulletin, Echelon Corp., August 1991.

Apple Inc. v. Rembrandt Wireless Technologies, LP, IPR2020-00033 IPR2020-00036 Page 00793
Exhibit 1218 11/12
Ex. 2012
Page 793

The Reliable Premium Solution You Can Actually Afford To Use.

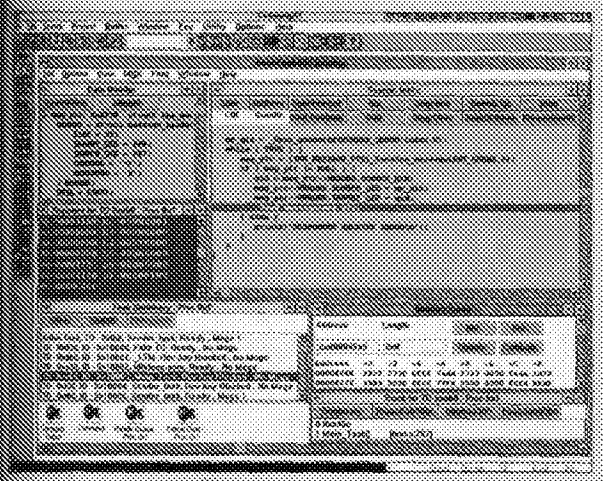

PC Version

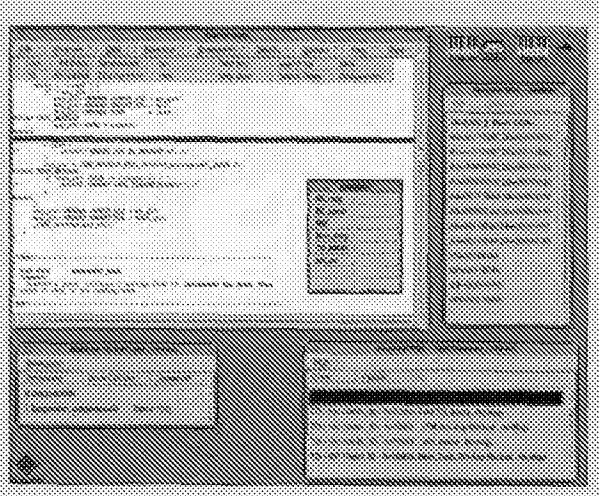

SUN Version

The Only Royalty-Free, Fully-Integrated Solution Available Backed By Over 25 Years Of Market Leadership:

THE PRECISE SOLUTION from Intermetrics

MOTOROLA EMBEDDED

The Precise Solution integrates the very best of Intermetrics field-proven compiler and debugger technology with the leading-edge MQX real-time executive from Precise Software Technologies, Inc.

The Precise/MQX technology represents over a decade of rich kernel heritage. When MQX is combined with the Intermetrics task-aware tools, the result is a premium, fully-integrated solution... all from one source.

With *complete* royalty-free packages starting as low as $8,500 and supported by a solid, public company, you can complete your 68XXX project *quickly*, with affordability and confidence.

Our 68XXX Precise Solutions for PC/Windows or SUN:

- **Precise/MQX Real Time Executive**
- **PassKey/MQX Kernel-Aware Windows Cross-Debugger for PC or SUN**
- **InterTools Optimizing C Compiler**
- **Optional Windows Integrated Development Environment**
- **TCP/IP, ASYNCH, SDLC, LAPD Communications Support**
- **Host Kernel Simulation Tools**
- **Support for BDM and In-Circuit Emulators**

All Sold And Supported By One Company – Complete Solutions Starting at $8,500

800-356-3594

Intermetrics
Microsystems Software, Inc.

MA: (617) 661-0072, CA: (714) 891-4631, Fax: (617) 868-2843
733 Concord Avenue, Cambridge, MA 02138

Rembrandt Wireless Ex. 2012
Apple Inc. v. Rembrandt Wireless Technologies, LP, IPR2020-00033
Page 794
IPR2020-00036 Page 00794
Exhibit 1218 12/12

US008457228B2

(12) **United States Patent**
Bremer

(10) **Patent No.: US 8,457,228 B2**
(45) **Date of Patent: *Jun. 4, 2013**

(54) **SYSTEM AND METHOD OF COMMUNICATION USING AT LEAST TWO MODULATION METHODS**

(76) Inventor: **Gordon F. Bremer**, Clearwater, FL (US)

(*) Notice: Subject to any disclaimer, the term of this patent is extended or adjusted under 35 U.S.C. 154(b) by 0 days.

This patent is subject to a terminal disclaimer.

(21) Appl. No.: **13/198,568**

(22) Filed: **Aug. 4, 2011**

(65) **Prior Publication Data**

US 2012/0106604 A1 May 3, 2012

Related U.S. Application Data

(63) Continuation of application No. 12/543,910, filed on Aug. 19, 2009, now Pat. No. 8,023,580, which is a continuation of application No. 11/774,803, filed on Jul. 9, 2007, now Pat. No. 7,675,965, which is a continuation of application No. 10/412,878, filed on Apr. 14, 2003, now Pat. No. 7,248,626, which is a continuation-in-part of application No. 09/205,205, filed on Dec. 4, 1998, now Pat. No. 6,614,838.

(60) Provisional application No. 60/067,562, filed on Dec. 5, 1997.

(51) **Int. Cl.**
H04L 5/12 (2006.01)

(52) **U.S. Cl.**
USPC **375/261**; 375/295; 455/102; 332/108; 332/119; 332/151

(58) **Field of Classification Search**
USPC 375/261, 269, 285, 222, 298, 302, 375/305, 308; 455/102, 110; 332/108, 119, 332/120, 151
See application file for complete search history.

(56) **References Cited**

U.S. PATENT DOCUMENTS

3,736,528	A	5/1973	Acker et al.
3,761,840	A	9/1973	Bremer
3,970,926	A	7/1976	Rigby et al.
4,091,422	A	5/1978	Amster
4,335,464	A	6/1982	Armstrong et al.
4,381,546	A	4/1983	Armstrong

(Continued)

OTHER PUBLICATIONS

"Conelrad Emergency Radio Notification System Born in 1951", www.modestoradiomuseum.org, Accessed on Dec. 5, 2010, 2 pages.

(Continued)

Primary Examiner — Dac Ha
(74) *Attorney, Agent, or Firm* — Condo Roccia LLP

(57) **ABSTRACT**

A device may be capable of communicating using at least two type types of modulation methods. Methods and systems are provided for communication of data according to a communications method in which a master transceiver communicates with one or more slave transceivers according to a master/slave relationship. A first data message may include first information and second information that are modulated according to a first modulation method. The second information may include lower data rate data. A second data message may include third information that may be modulated according to the first modulation method and that may indicate an impending change to a second modulation method. The second modulation method may be used for transmitting fourth information, and the fourth information may be included in the second message. The fourth information may include higher data rate data, for example Internet access data.

52 Claims, 8 Drawing Sheets

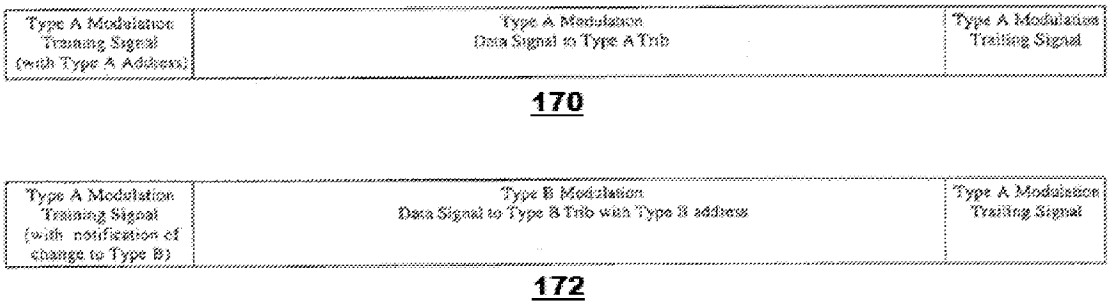

U.S. PATENT DOCUMENTS

4,464,767	A	8/1984	Bremer	
4,503,545	A	3/1985	Bremer et al.	
4,509,171	A	4/1985	Bremer et al.	
4,516,216	A	5/1985	Armstrong	
4,525,846	A	6/1985	Bremer et al.	
4,525,847	A	6/1985	Bremer	
4,532,640	A	7/1985	Bremer et al.	
4,630,286	A	12/1986	Betts	
4,645,871	A	2/1987	Bremer et al.	
4,654,807	A	3/1987	Bremer	
4,663,766	A	5/1987	Bremer	
4,677,625	A	6/1987	Betts et al.	
4,782,498	A	11/1988	Copeland, III	
4,811,357	A	3/1989	Betts et al.	
4,862,464	A	8/1989	Betts et al.	
4,924,516	A	5/1990	Bremer et al.	
4,926,448	A	5/1990	Kraul et al.	
4,939,748	A	7/1990	Betts et al.	
5,008,903	A	4/1991	Betts et al.	
5,050,536	A	9/1991	Baker	
5,070,536	A	12/1991	Mahany et al.	
5,081,647	A	1/1992	Bremer	
5,099,478	A	3/1992	Bremer et al.	
5,168,535	A	12/1992	Laor	
5,206,854	A	4/1993	Betts et al.	
5,230,010	A	7/1993	Betts et al.	
5,239,306	A	8/1993	Siwiak et al.	
5,239,607	A	8/1993	da Silva et al.	
5,251,236	A	10/1993	Brehmer et al.	
5,251,328	A	10/1993	Shaw	
5,257,396	A	10/1993	Auld, Jr. et al.	
5,280,503	A	1/1994	Betts et al.	
5,311,557	A	5/1994	Betts et al.	
5,311,578	A	5/1994	Bremer et al.	
5,345,332	A	9/1994	daSilva et al.	
5,355,362	A	10/1994	Gorshe et al.	
5,373,149	A	12/1994	Rasmussen	
5,392,154	A	2/1995	Chang et al.	
5,412,651	A	5/1995	Gorshe	
5,414,540	A	5/1995	Patel et al.	
5,436,930	A	7/1995	Bremer et al.	
5,444,704	A	8/1995	Henderson et al.	
5,448,555	A	9/1995	Bremer et al.	
5,450,456	A	9/1995	Mueller	
5,473,675	A	12/1995	Chapman et al.	
5,475,713	A	12/1995	Bremer et al.	
5,506,866	A	4/1996	Bremer et al.	
5,513,212	A	4/1996	Bremer	
5,513,213	A	4/1996	Patel et al.	
5,521,942	A	5/1996	Betts et al.	
5,530,718	A	6/1996	Gradeler et al.	
5,537,398	A *	7/1996	Siwiak	370/204
5,537,411	A	7/1996	Plas	
5,537,436	A	7/1996	Bottoms et al.	
5,540,456	A	7/1996	Meier-Burkamp et al.	
5,548,222	A	8/1996	Jensen et al.	
5,550,881	A	8/1996	Sridhar et al.	
5,559,791	A	9/1996	Bremer et al.	
5,559,792	A	9/1996	Bottoms et al.	
5,559,810	A	9/1996	Gilbert et al.	
5,563,883	A	10/1996	Cheng	
5,570,295	A	10/1996	Isenberg et al.	
5,577,087	A	11/1996	Furuya	
5,602,869	A	2/1997	Scott	
5,629,992	A	5/1997	Amersfoort et al.	
5,642,379	A	6/1997	Bremer	
5,651,114	A	7/1997	Davidson, Jr.	
5,661,718	A	8/1997	Bremer et al.	
5,671,250	A	9/1997	Bremer et al.	
5,684,825	A	11/1997	Ko	
5,684,834	A	11/1997	Betts et al.	
5,711,012	A	1/1998	Bottoms et al.	
5,719,922	A	2/1998	Bremer et al.	
5,719,923	A	2/1998	Bremer et al.	
5,748,811	A	5/1998	Amersfoort et al.	
5,764,699	A	6/1998	Needham et al.	
5,793,800	A	8/1998	Jylha et al.	
5,812,669	A	9/1998	Bingel et al.	
5,805,755	A	9/1998	Amersfoort et al.	
5,812,537	A	9/1998	Betts et al.	
5,825,517	A	10/1998	Antoniades et al.	
5,828,657	A	10/1998	Betts et al.	
5,841,500	A	11/1998	Patel	
5,844,944	A	12/1998	Betts et al.	
5,859,877	A	1/1999	Betts et al.	
5,881,047	A	3/1999	Bremer et al.	
5,881,142	A	3/1999	Frankel et al.	
5,901,205	A	5/1999	Smith et al.	
5,915,003	A	6/1999	Bremer et al.	
5,936,949	A	8/1999	Pasternak et al.	
5,940,438	A	8/1999	Poon et al.	
5,960,400	A	9/1999	Bremer	
5,963,620	A	10/1999	Frankel et al.	
5,999,563	A	12/1999	Polley et al.	
6,011,814	A	1/2000	Martinez et al.	
6,021,158	A	2/2000	Schurr et al.	
6,031,897	A	2/2000	Bremer et al.	
6,061,392	A	5/2000	Bremer et al.	
6,067,297	A	5/2000	Beach	
6,072,779	A	6/2000	Tzannes et al.	
6,075,512	A	6/2000	Patel et al.	
6,097,858	A	8/2000	Laor	
6,097,860	A	8/2000	Laor	
6,101,299	A	8/2000	Laor	
6,108,347	A	8/2000	Holmquist	
6,111,936	A	8/2000	Bremer	
6,125,148	A	9/2000	Frodigh et al.	
6,134,245	A	10/2000	Scarmalis	
6,154,524	A	11/2000	Bremer	
6,157,680	A	12/2000	Betts et al.	
6,160,790	A	12/2000	Bremer	
6,175,436	B1	1/2001	Jackel	
6,185,083	B1	2/2001	Mathieu et al.	
6,208,663	B1 *	3/2001	Schramm et al.	370/465
6,212,227	B1	4/2001	Ko et al.	
6,236,481	B1	5/2001	Laor	
6,236,717	B1	5/2001	Bremer et al.	
6,243,391	B1	6/2001	Holmquist	
6,252,644	B1	6/2001	Patel	
6,272,108	B1	8/2001	Chapman	
6,272,154	B1	8/2001	Bala et al.	
6,292,281	B1	9/2001	Bala et al.	
6,307,653	B1	10/2001	Bala et al.	
6,307,893	B1	10/2001	Bremer et al.	
6,307,923	B1	10/2001	Bremer et al.	
6,320,879	B1	11/2001	Bremer	
6,320,993	B1	11/2001	Laor	
6,330,275	B1	12/2001	Bremer	
6,335,992	B1	1/2002	Bala et al.	
6,347,008	B1	2/2002	Vodhanel	
6,348,986	B1	2/2002	Doucet et al.	
6,408,056	B1	6/2002	Bremer et al.	
6,445,733	B1	9/2002	Zuranski et al.	
6,470,110	B1	10/2002	Lin	
6,480,645	B1	11/2002	Peale et al.	
6,493,475	B1	12/2002	Lin	
6,529,652	B1	3/2003	Brener	
6,535,589	B1	3/2003	Nauman et al.	
6,546,090	B1	4/2003	Bremer et al.	
6,549,692	B1	4/2003	Harel et al.	
6,556,540	B1	4/2003	Mawhinney et al.	
6,580,709	B1	6/2003	Gorshe et al.	
6,580,785	B2	6/2003	Bremer et al.	
6,591,029	B1	7/2003	Lin et al.	
6,597,827	B1	7/2003	Brener et al.	
6,603,894	B1	8/2003	Pu	
6,614,838	B1 *	9/2003	Bremer	375/220
6,628,857	B1	9/2003	Bonadeo et al.	
6,631,119	B1	10/2003	Mawhinney et al.	
6,633,693	B1	10/2003	Peale et al.	
6,647,058	B1	11/2003	Bremer et al.	
6,658,096	B2	12/2003	Bremer et al.	
6,671,328	B1	12/2003	Poon et al.	
6,690,644	B1	2/2004	Gorshe	
6,690,849	B1	2/2004	Dadap, Jr. et al.	
6,715,124	B1	3/2004	Betts	
6,744,883	B1	6/2004	Bingel et al.	

6,771,740	B1	8/2004	Bingel	
6,775,355	B1	8/2004	Bingel et al.	
6,782,094	B1	8/2004	Venz et al.	
6,782,096	B1	8/2004	Bremer et al.	
6,885,730	B1	4/2005	Bremer	
6,922,415	B1	7/2005	Bremer et al.	
6,950,444	B1	9/2005	Holmquist et al.	
6,970,501	B1	11/2005	Bremer et al.	
7,006,445	B1	2/2006	Cole et al.	
7,013,421	B2	3/2006	Betts	
7,020,266	B2	3/2006	Bremer et al.	
7,023,829	B1	4/2006	Holmquist et al.	
7,035,380	B1	4/2006	Bingel et al.	
7,046,798	B2	5/2006	Betts et al.	
7,058,833	B1	6/2006	Bremer et al.	
7,065,205	B1	6/2006	Bingel et al.	
7,127,048	B2	10/2006	Bremer et al.	
7,130,338	B2	10/2006	Bremer et al.	
7,155,016	B1	12/2006	Betts et al.	
7,170,867	B2	1/2007	O'Toole et al.	
7,248,626	B2	7/2007	Bremer	
7,272,215	B2	9/2007	Bremer et al.	
7,289,604	B2	10/2007	Bremer	
7,289,610	B2	10/2007	Bremer et al.	
7,352,803	B2	4/2008	Bremer et al.	
7,471,777	B2	12/2008	Bremer et al.	
7,675,965	B2	3/2010	Bremer	
7,707,446	B2	4/2010	Bremer et al.	
7,711,109	B2	5/2010	Betts et al.	
7,747,000	B2	6/2010	Bremer et al.	
8,023,580	B2 *	9/2011	Bremer	375/261
2001/0022836	A1	9/2001	Bremer et al.	
2002/0041662	A1	4/2002	Bremer et al.	
2002/0167949	A1	11/2002	Bremer et al.	
2003/0039348	A1	2/2003	Bremer et al.	
2003/0210773	A1	11/2003	Bremer et al.	
2003/0210779	A1	11/2003	Bremer et al.	
2004/0013183	A1	1/2004	Bremer	
2004/0042510	A1	3/2004	Bremer et al.	
2004/0052361	A1	3/2004	Betts et al.	
2004/0066929	A1	4/2004	Bremer et al.	
2004/0081233	A1	4/2004	Bremer et al.	
2004/0179662	A1	9/2004	Bremer et al.	
2004/0213170	A1	10/2004	Bremer	
2004/0258236	A1	12/2004	Bremer et al.	
2005/0025153	A1	2/2005	Bremer et al.	
2005/0074057	A1	4/2005	Bremer et al.	
2005/0147158	A1	7/2005	Bremer et al.	
2005/0152404	A1	7/2005	Holmquist et al.	
2005/0163303	A1	7/2005	Bremer et al.	
2005/0180545	A1	8/2005	Bremer	
2006/0188088	A1	8/2006	Bingel et al.	
2006/0193465	A1	8/2006	Betts et al.	
2006/0195712	A1	8/2006	Bremer et al.	
2007/0047730	A1	3/2007	Bremer et al.	
2007/0047733	A1	3/2007	Bremer et al.	
2007/0286187	A1	12/2007	Bremer et al.	
2008/0013608	A1	1/2008	Bremer	
2008/0019432	A1	1/2008	Bremer et al.	
2009/0111422	A1	4/2009	Bremer et al.	
2009/0262911	A1	10/2009	Bremer et al.	
2009/0262912	A1	10/2009	Bremer et al.	
2010/0183055	A1	7/2010	Bremer	
2010/0246598	A1	9/2010	Bremer et al.	

OTHER PUBLICATIONS

Federal Communications Commission(FCC), "Emergency Alert System", Public Safety and Homeland Security Bureau, www.fcc.gov/pshs/services/eas, Accessed on Dec. 5, 2010, 2 pages.
"Specialized Communications Techniques for the Radio Amateur", The American Radio Relay League, Inc., 1975, 1st Edition, Chapter 4, 78-83.
"Specialized Communications Techniques for the Radio Amateur", The American Radio Relay League, Inc., 1975, 1st Edition, Chapter 5, 99-113.
Bates (Ed.), "Broadband Telecommunications Handbook", McGraw-Hill Publishing, NY, 2000, Chapter 9, 128, 129, 131, 132, 133 and 134.
Benson (Ed.), "Television Engineering Handbook", McGraw-Hill Publishers, NY, 1992, 4.14, 4.15, 4.24, 4.34 and 4.35.
Bluetooth®, "Specification of the Bluetooth System, Master Table of Contents & Compliance Requirements", Specification vol. 0, Nov. 4, 2004, V2.0, 1-1230.
Bluetooth®, "Specification of the Bluetooth System, Core", Dec. 1, 1999, V1.0B, 1-1082.
Bluetooth®, "Specification of the Bluetooth System, Profiles", Specification vol. 2, Dec. 1, 1999, V1.0B, 1-440.
Chorafas (Ed.), "Telephony: Today and Tomorrow", Prentice-Hall, Inc., NJ, 1984, Chapter 15, 191-197.
Erickson (Ed.), "Options for Presentation of Multilingual Text: Use of the Unicode Standard", Mar. 14, 1997, 20 pages.
Freeman (Ed.), "Telecommunications Systems Engineering: Analog and Digital Network Design", John Wiley and Sons, Inc., NY, 1980, 180.
Goodman (Ed.), "Radio Amateur's Handbook", The American Radio Relay League, Inc., CN, 1965, Chapter 10, 291-295.
Green (Ed.), "RTTY Handbook", Tab Books, 1972, Chapter 4, 266-273.
IEEE Information Technology, "Wireless LAN Medium Access Control (MAC) and Physical Layer (PHY) Specifications", 1997, 1-466.
Jurgen (Ed.), "Digital Consumer Electronics Handbook", McGraw-Hill Publications, NY, 1997, 27.7-27.10.
Kuecken (Ed.), "Talking Computers and Telecommunications", Van Nostrand Reinhold Company, Inc., NY, 1983, 32-36.
Margulies (Ed.), "SCSA Book", Telecom Library, Inc., NJ, 1993, Chapter 8, 250.
Martin (Ed.), "Telecommunications and the Computer", Prentice-Hall, Inc., NJ, 2nd Edition, 1976, Chapter 21, 410-423.
Mazda, (Ed.), "Electronics Engineer's Reference Book", 5.sup.th Edition, Butterworth and Company Publishers, London, 1983, 54.5-54.8.
Newton (Ed.), "Newton's Telecom Dictionary", Flatiron Publications, Inc., NY, Apr. 1994, 7th Edition, 9, 363, 364, 426, 427, 428, 429 and 430.
Pallott and Miller, "Implementing Message Priority Polices Over an 802.11 Based Mobile Ad Hoc Network", IEEE, Military Communications Conference, 2001, MILCOM 2001, Communications for Network-Centric Operations: Creating the Information Force, Oct. 28-31, 2001, 2, 860-864.
The National Association for Amateur Radio (ARRL), Radioteletype (RTTY), "Basic Principles and Machines", Chapter 2.1, Book or Journal Title Unknown, Date Unknown, pp. 13 and 14.
The National Association for Amateur Radio (ARRL), Radioteletype (RTTY), "Autostart", Chapter 3.4, "references", Chapter 8, Book or Journal Title Unknown, Date Unknown, pp. 107-111, 183, 185, 186 and 187.
Rzeszewski (Ed.), "Color Television", IEEE Press, John Wiley and Sons, Inc, NY, 1983, 3, 8 and 9.
Shrader (Ed.), "Electronic Communication", McGraw-Hill Publishers, NY, 1959, 551-555.
Shrader (Ed.), "Electronic Communication", McGraw-Hill Publishers, NY, 1959, 519.
Third Generation Partnership Project (3GPP)-Technologies Web Page, http://www.3gpp.org/-technologies-, Accessed on Feb. 8, 2011, 2 pages.
Vilips (Ed.), "Data Modem: Selection and Evaluation Guide", Artech House, Inc, MA, 1972, Section 1, 3 pages.
Wilson et al (Ed.), "The ARRL Handbook for Radio Communications", 64th Edition, The American Radio Relay League, Inc., 1986, Chapter 19, 19-9-19-13.
Wilson et al. (Ed.), "The ARRL Handbook for Radio Communications", 85th Edition, The American Radio Relay League, 2008, Chapter 9, 9.32, 9.33 and 9.34.
Wilson et al. (Ed.), "The ARRL Handbook for Radio Communications", 64th Edition, The American Radio Relay League Inc., 1986, Chapter 14, 14-13 and 14-14.
International Telecommunications Union, Telecommunication Standardization Sector of ITU (ITU-T), Series T: Terminal Equipments and Protocols for Telematic Services, "Procedures for Document Facsimile Transmission in the General Switched Telephone Network", ITU-T Recommendation T.30, Jul. 1996, 176 pages.

International Telecommunications Union, The International Telegraph and Telephone Consultative Committee (CCITT), Data Communication Over the Telephone Network, "A 2-Wire Modem for Facsimile Applications with Rates Up to 14 400 bit/s", Recommendation V.17, Feb. 1991, 13 pages.

International Telecommunications Union, Telecommunication Standardization Sector of ITU (ITU-T), Series T: Terminal Equipments and Protocols for Telematic Services, "Standardization of Group 3 Facsimile Terminals for Document Transmission", ITU-T Recommendation T.4, Jul. 1996, 60 pages.

International Telecommunications Union, Telecommunication Standardization Sector of ITU (ITU-T), Series T: Terminal for Telematic Services, "Standardization of Group 3 Facsimile Terminals for Document Transmission", ITU-T Recommendation T.4-Amendment 1, Jul. 1997, 10 pages.

International Telecommunications Union, Telecommunication Standardization Sector of ITU (ITU-T), Series T: Terminals for Telematic Services, "Standardization of Group 3 Facsimile Terminals for Document Transmission", ITU-T Recommendation T.4-Amendment 2, Oct. 1997, 14 pages.

International Telecommunications Union, Telecommunication Standardization Sector of ITU (ITU-T), Series T: Terminals for Telematic Services, "Procedures for Document Facsimile Transmission in the General Switched Telephone Network", ITU-T Recommendation T.30-Amendment 1, Jul. 1997, 110 pages.

International Telecommunications Union, Telecommunication Standardization Sector of ITU (ITU-T), Series T: Terminals for Telematic Services, "Procedures for Document Facsimile Transmission in the General Switched Telephone Network", ITU-T Recommendation T.30-Amendment 2, Oct. 1997, 18 pages.

* cited by examiner

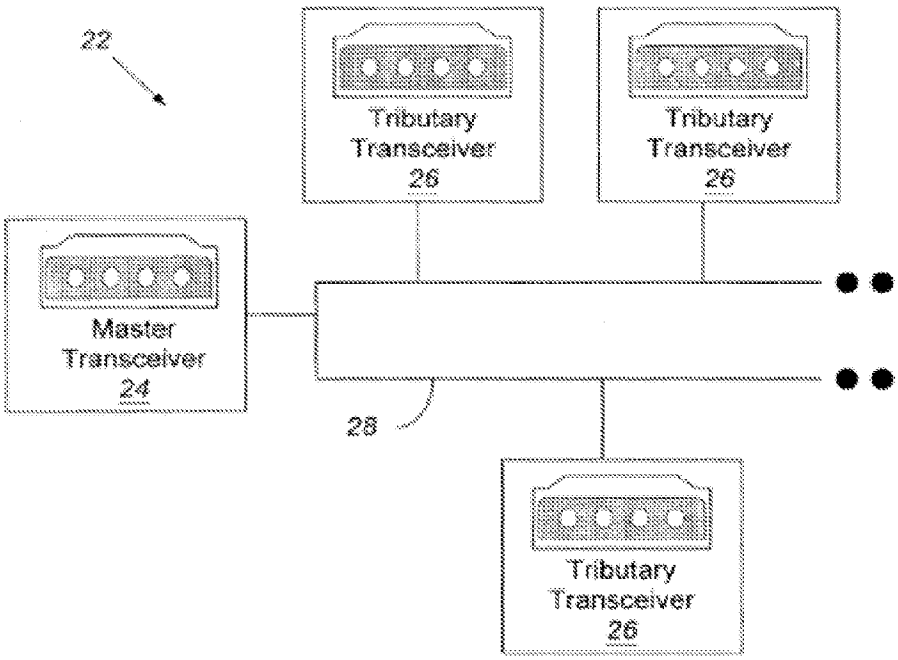

FIG. 1
Prior Art

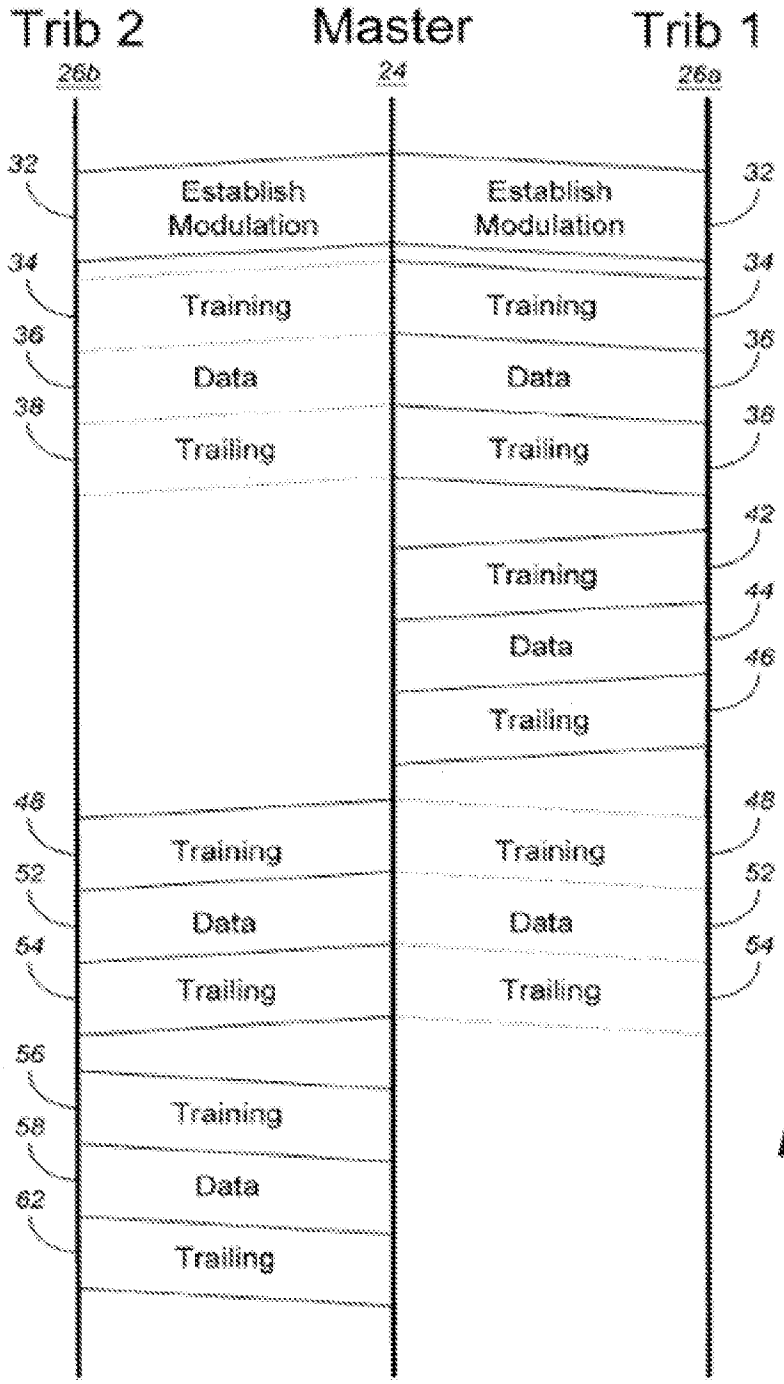
Trib 2
26b
Master
24
Trib 1
26a
32
Establish Modulation
Establish Modulation
32
34
Training
Training
34
36
Data
Data
36
38
Trailing
Trailing
38
42
Training
44
Data
46
Trailing
48
Training
Training
48
52
Data
Data
52
54
Trailing
Trailing
54
56
Training
58
Data
62
Trailing

FIG. 2

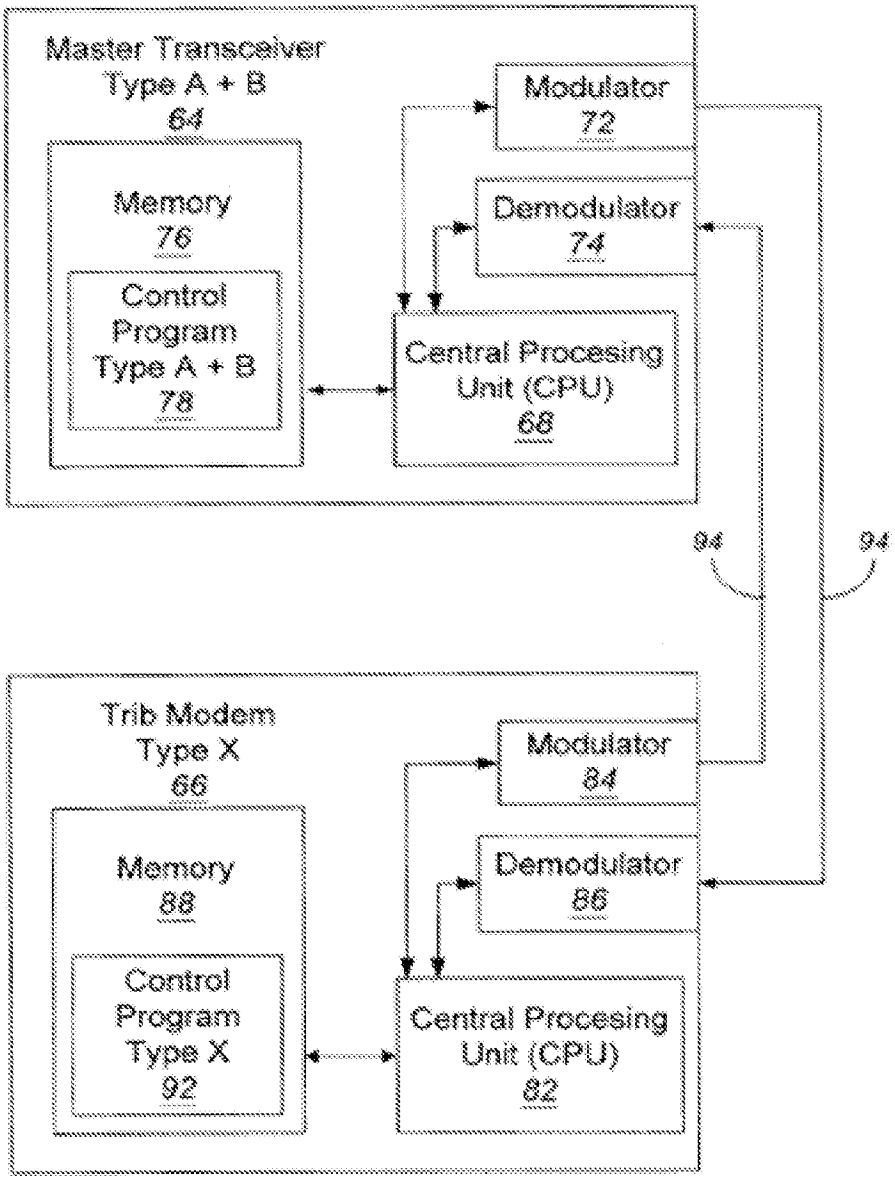
Master Transceiver
Type A + B
64
Memory
76
Control
Program
Type A + B
78
Modulator
72
Demodulator
74
Central Procesing
Unit (CPU)
68
94
94
Trib Modem
Type X
66
Memory
88
Control
Program
Type X
92
Modulator
84
Demodulator
86
Central Procesing
Unit (CPU)
82

FIG. 3

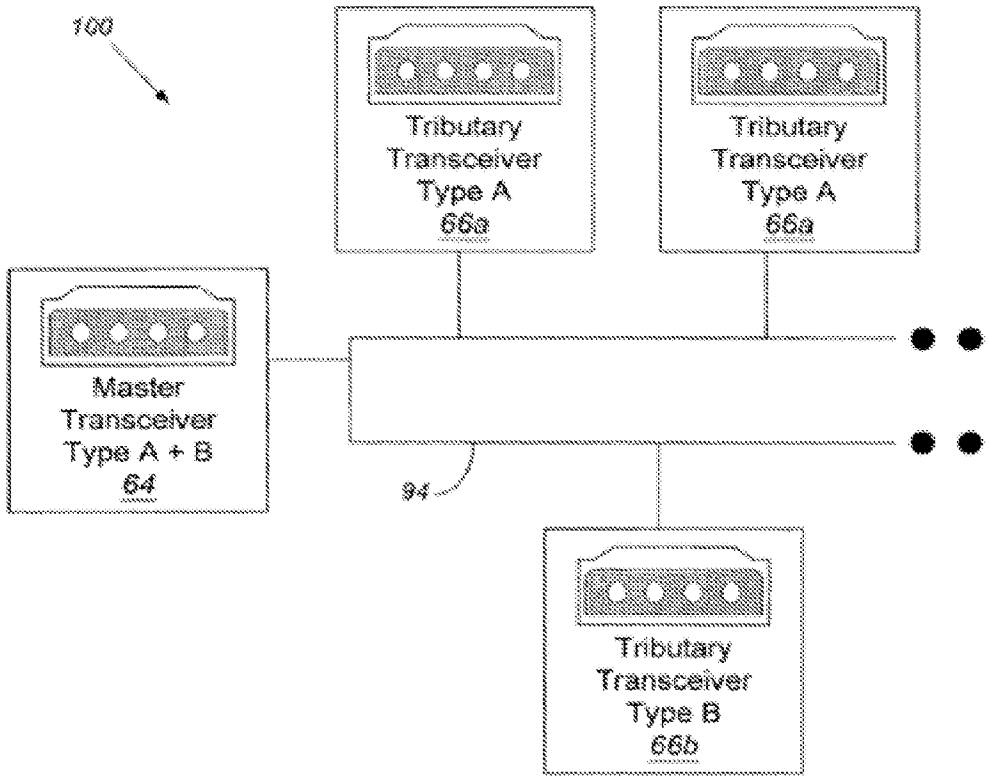
100
Tributary
Transceiver
Type A
66a
Tributary
Transceiver
Type A
66a
Master
Transceiver
Type A + B
64
94
Tributary
Transceiver
Type B
66b

FIG. 4

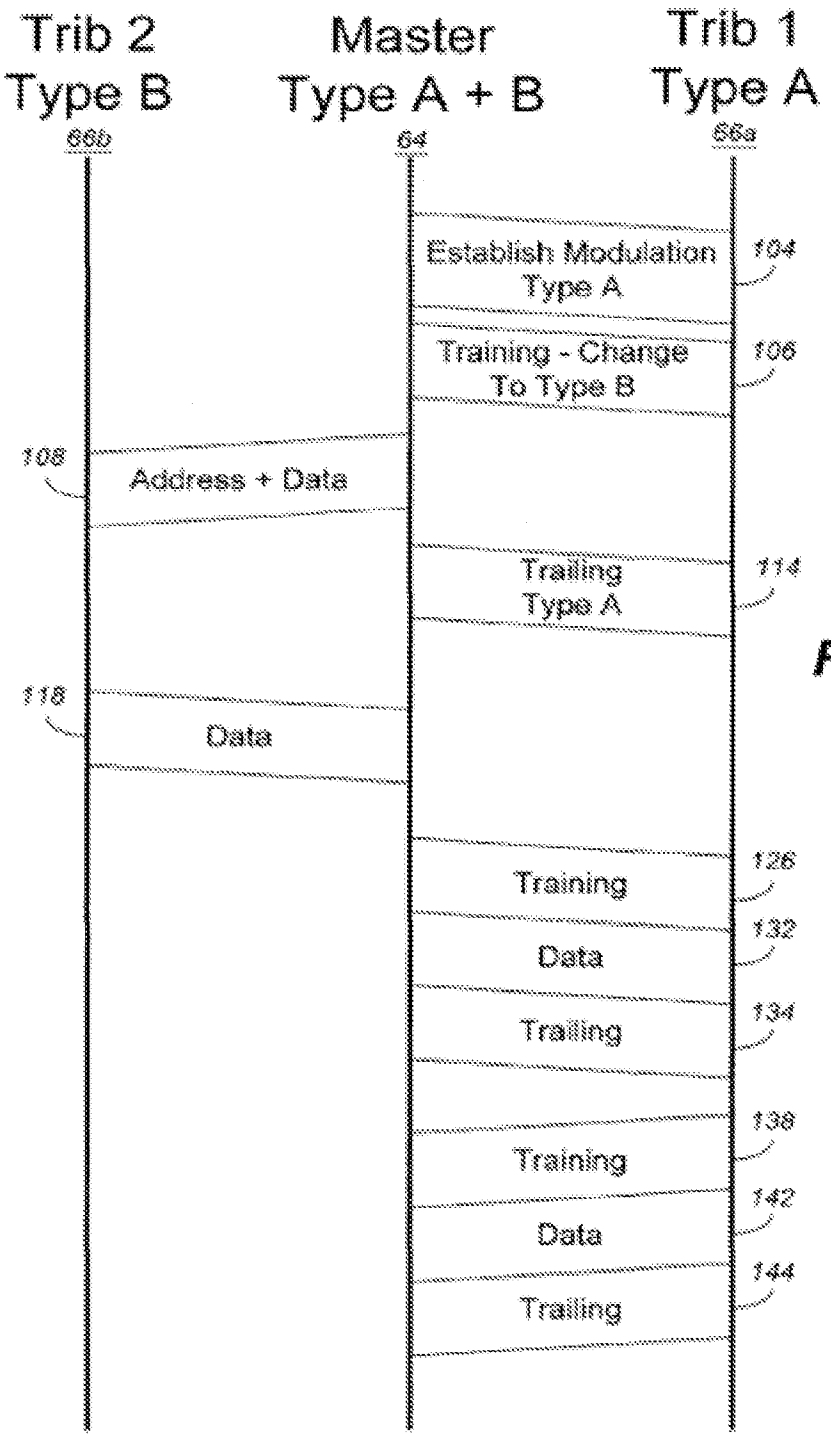
Trib 2
Type B
66b
Master
Type A + B
64
Trib 1
Type A
66a
Establish Modulation
Type A
104
Training - Change
To Type B
106
108
Address + Data
Trailing
Type A
114
118
Data
Training
126
Data
132
Trailing
134
Training
138
Data
142
Trailing
144

FIG. 5

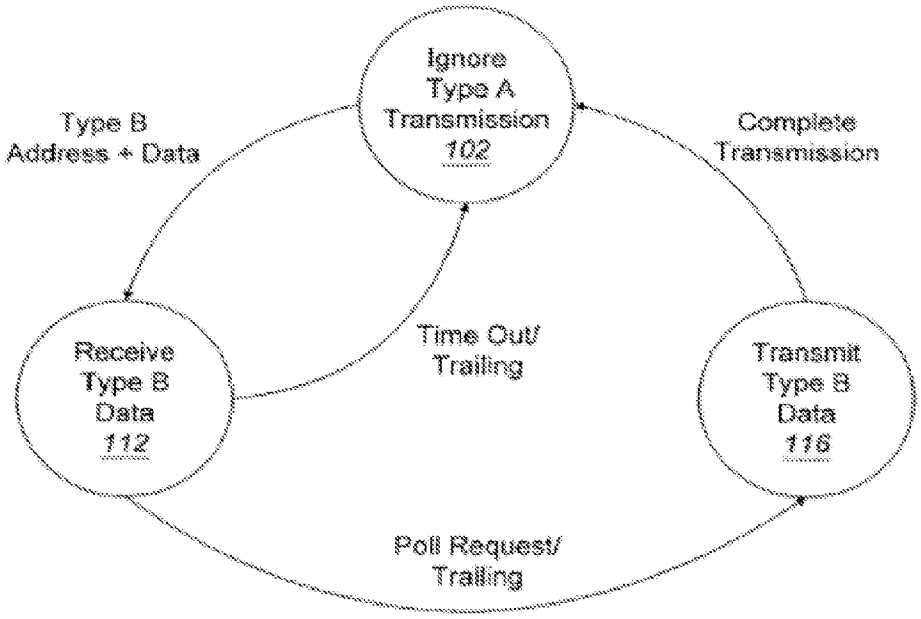
Ignore
Type A
Transmission
102
Type B
Address + Data
Complete
Transmission
Receive
Type B
Data
112
Time Out/
Trailing
Transmit
Type B
Data
116
Poll Request/
Trailing

FIG. 6

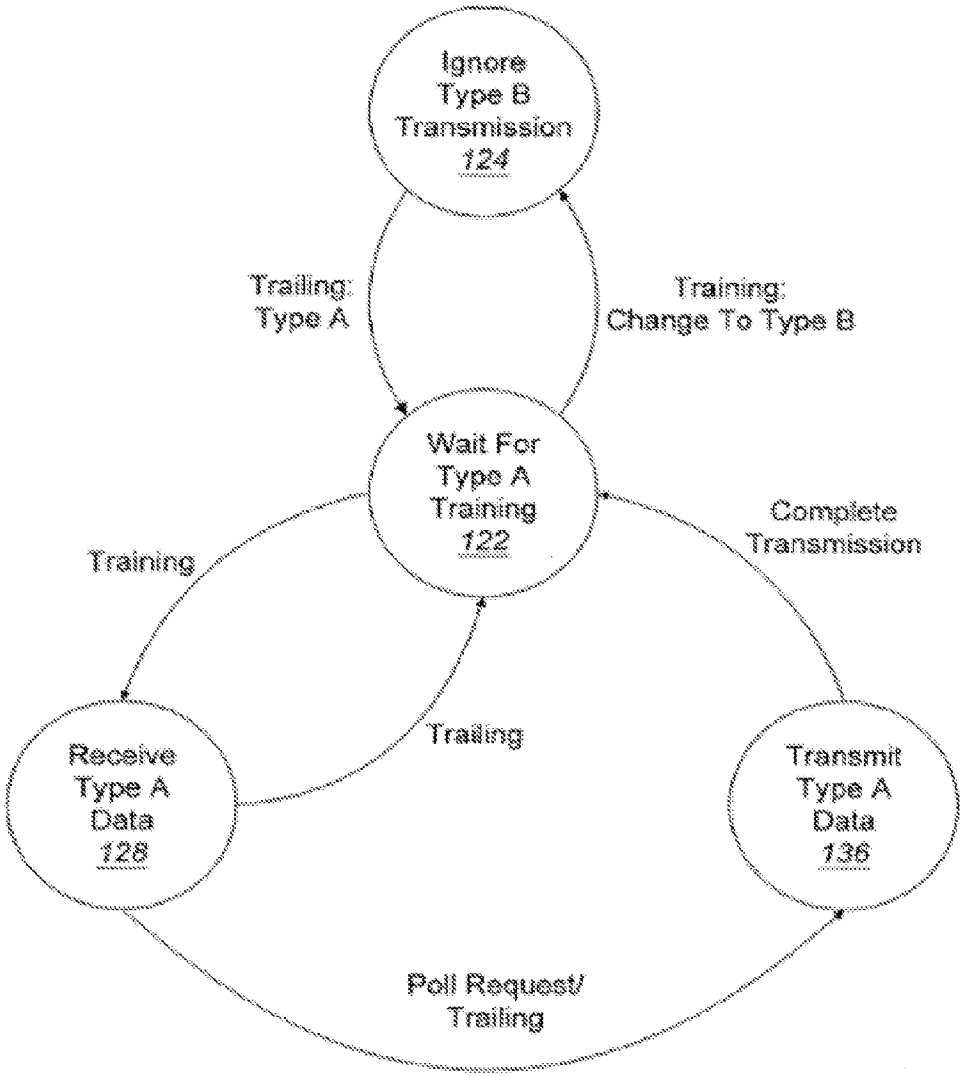
Ignore
Type B
Transmission
124
Trailing:
Type A
Training:
Change To Type B
Wait For
Type A
Training
122
Training
Complete
Transmission
Trailing
Receive
Type A
Data
128
Transmit
Type A
Data
136
Poll Request/
Trailing

FIG. 7

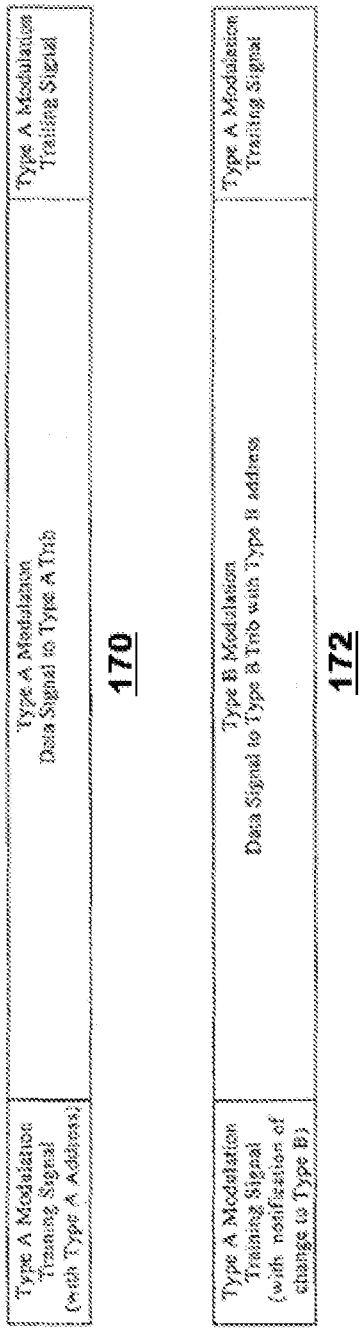
Type A Modulation Training Signal (with Type A Address)
Type A Modulation Data Signal to Type A Trib
Type A Modulation Training Signal
170
Type A Modulation Training Signal (with notification of change to Type B)
Type B Modulation Data Signal to Type B Trib with Type B address
Type A Modulation Training Signal
172

FIG. 8

SYSTEM AND METHOD OF COMMUNICATION USING AT LEAST TWO MODULATION METHODS

CROSS REFERENCE TO RELATED APPLICATION

This application is a continuation of U.S. application Ser. No. 12/543,910 filed on Aug. 19, 2009, which is a continuation of U.S. application Ser. No. 11/774,803, filed on Jul. 9, 2007, which is a continuation of U.S. application Ser. No. 10/412,878, filed Apr. 14, 2003, which is a continuation-in-part of U.S. application Ser. No. 09/205,205, filed Dec. 4, 1998, and which claims priority to and the benefit of the filing date of U.S. Provisional Application No. 60/067,562, filed Dec. 5, 1997, each of which is incorporated by reference herein.

TECHNICAL FIELD

The present invention relates generally to the fields of data communications and modulator/demodulators (modems), and, more particularly, to a data communications system in which a plurality of modulation methods are used to facilitate communication among a plurality of modem types.

BACKGROUND

In existing data communications systems, a transmitter and receiver modem pair can successfully communicate only when the modems are compatible at the physical layer. That is, the modems must use compatible modulation methods. This requirement is generally true regardless of the network topology. For example, point- to-point, dial-up modems operate in either the industry standard V.34 mode or the industry standard V.22 mode. Similarly, in a multipoint architecture, all modems operate, for example, in the industry standard V.27bis mode. While the modems may be capable of using several different modulation methods, a single common modulation is negotiated at the beginning of a data session to be used throughout the duration of the session. Should it become necessary to change modulation methods, the existing data session is torn down, and a new session is negotiated using the new modulation method. Clearly, tearing down an existing data session causes a significant disruption in communication between the two modems.

As discussed in the foregoing, communication between modems is generally unsuccessful unless a common modulation method is used. In a point-to-point network architecture, if a modem attempts to establish a communication session with an incompatible modem, one or both of the modems will make several attempts to establish the communication link until giving up after a timeout period has expired or the maximum number of retry attempts has been reached. Essentially, communication on the link is impossible without replacing one of the modems such that the resulting modem pair uses a common modulation method.

In a multipoint architecture, a single central, or "master," modem communicates with two or more tributary or "trib" modems using a single modulation method. If one or more of the trib modems are not compatible with the modulation method used by the master, those tribs will be unable to receive communications from the master. Moreover, repeated attempts by the master to communicate with the incompatible trib(s) will disturb communications with compatible trib(s) due to time wasted in making the futile communication attempts.

Thus, communication systems comprised of both high performance and low or moderate performance applications can be very cost inefficient to construct. For example, some applications (e.g., internet access) require high performance modulation, such as quadrature amplitude modulation (QAM), carrier amplitude and phase (CAP) modulation, or discrete multitone (DMT) modulation, while other applications (e.g., power monitoring and control) require only modest data rates and therefore a low performance modulation method. All users in the system will generally have to be equipped with a high performance modem to ensure modulation compatibility. These state of the art modems are then run at their lowest data rates for those applications that require relatively low data throughput performance. The replacement of inexpensive modems with much more expensive state of the art devices due to modulation compatibility imposes a substantial cost that is unnecessary in terms of the service and performance to be delivered to the end user.

Accordingly, what is sought, and what is not believed to be provided by the prior art, is a system and method of communication in which multiple modulation methods are used to facilitate communication among a plurality of modems in a network, which have heretofore been incompatible.

SUMMARY

The present invention disclosed herein includes methods and systems for communication of data according to a communications method in which a master transceiver communicates with one or more slave transceivers according to a master/slave relationship. Communication from the one or more slave transceivers may be in response to a communication from the master to at least one of the one or more slave transceivers. Example communication methods may include transmitting at least a first message, which may be low data rate message, of a plurality of data messages. The plurality of data messages may be transmitted over a communication medium from the master transceiver to the one or more slave transceivers. The first message may include first information, and the first information may be modulated according to a first modulation method. The first message may include second information. The second information may be modulated according to the first modulation method. The second information may comprise lower data rate data, for example low data rate application data. The first message may include first message address data that may be indicative of an identity of one of the one or more slave transceivers as an intended destination of the second information. Example communication methods may include transmitting a second message, which may be a high data rate message, of the plurality of data messages. The second message may comprise third information (e.g., first information of the second message/high data rate message), and the third information may be modulated according to the first modulation method. The third information may be indicative of an impending change in modulation to a second modulation method for transmission of fourth information (e.g., second information of the second message/high data rate message). The second message may comprise the fourth information, and the fourth information may be transmitted after transitioning from the first modulation method to the second modulation method. The fourth information may be modulated according to the second modulation method. The second modulation method may be of a different type than the first modulation method. The fourth information may comprise higher data rate data, for example Internet access application data. The fourth information may be intended for a single slave transceiver of the one or more

slave transceivers. The higher data rate data may be transmitted at a higher data rate than the low data rate application data. The second message may indicate an identity of the single slave transceiver as being an intended destination of the fourth information using second message address data included in the second message.

The present invention has many advantages, a few of which are delineated hereafter as merely examples.

One advantage of the present invention is that it provides to the use of a plurality of modem modulation methods on the same communication medium.

Another advantage of the present invention is that a master transceiver can communicate seamlessly with tributary transceivers or modems using incompatible modulation methods.

Other features and advantages of the present invention will become apparent to one with skill in the art upon examination of the following drawings and detailed description. It is intended that all such additional features and advantages be included herein within the scope of the present invention.

BRIEF DESCRIPTION OF THE DRAWINGS

The present invention can be better understood with reference to the following drawings. The components and representations in the drawings are not necessarily to scale, emphasis instead being placed upon clearly illustrating the principles of the present invention. Moreover, in the drawings, like reference numerals designate corresponding parts throughout the several views.

FIG. **1** is a block diagram of a prior art multipoint communication system including a master transceiver and a plurality of tributary transceivers;

FIG. **2** is a ladder diagram illustrating the operation of the multipoint communication system of FIG. **1**;

FIG. **3** is a block diagram of a master transceiver and tributary transceiver for use in the multipoint communication system of FIG. **1** in accordance with the principles of the present invention;

FIG. **4** is a block diagram of a multipoint communication system including the master transceiver and a plurality of tributary transceivers of the type illustrated in FIG. **3**;

FIG. **5** is a ladder diagram illustrating the operation of the multipoint communication system of FIG. **4**;

FIG. **6** is a state diagram for a tributary transceiver of FIGS. **3-5** using a secondary modulation method in accordance with the principles of the present invention;

FIG. **7** is a state diagram for a tributary transceiver of FIGS. **3-5** using a primary modulation method in accordance with the principles of the present invention; and

FIG. **8** is a signal diagram for an exemplary transmission according to an embodiment.

DETAILED DESCRIPTION OF ILLUSTRATIVE EMBODIMENTS

While the invention is susceptible to various modifications and alternative forms, a specific embodiment thereof is shown by way of example in the drawings and will herein be described in detail. It should be understood, however, that there is no intent to limit the invention to the particular form disclosed, but on the contrary, the invention is to cover all modifications, equivalents, and alternatives falling within the spirit and scope of the invention as defined by the claims.

With reference to FIG. **1**, a prior art multipoint communication system **22** is shown to comprise a master modem or transceiver **24**, which communicates with a plurality of tributary modems (tribs) or transceivers **26-26** over communication medium **28**. Note that all tribs **26-26** are identical in that they share a common modulation method with the master transceiver **24**. Thus, before any communication can begin in multipoint system **22**, the master transceiver and the tribs **26-26** must agree on a common modulation method. If a common modulation method is found, the master transceiver **24** and a single trib **26** will then exchange sequences of signals that are particular subsets of all signals that can be communicated via the agreed upon common modulation method. These sequences are commonly referred to as training signals and can be used for the following purposes: 1) to confirm that the common modulation method is available, 2) to establish received signal level compensation, 3) to establish time recovery and/or carrier recovery, 4) to permit channel equalization and/or echo cancellation, 5) to exchange parameters for optimizing performance and/or to select optional features, and 6) to confirm agreement with regard to the foregoing purposes prior to entering into data communication mode between the users. In a multipoint system, the address of the trib with which the master is establishing communication is also transmitted during the training interval. At the end of a data session a communicating pair of modems will typically exchange a sequence of signals known as trailing signals for the purpose of reliably stopping the session and confirming that the session has been stopped. In a multipoint system, failure to detect the end of a session will delay or disrupt a subsequent session.

Referring now to FIG. **2**, an exemplary multipoint communication session is illustrated through use of a ladder diagram. This system uses polled multipoint communication protocol. That is, a master controls the initiation of its own transmission to the tribs and permits transmission from a trib only when that trib has been selected. At the beginning of the session, the master transceiver **24** establishes a common modulation as indicated by sequence **32** that is used by both the master **24** and the tribs **26***a*, **26***b* for communication. Once the modulation scheme is established among the modems in the multipoint system, The master transceiver **24** transmits a training sequence **34** that includes the address of the trib that the master seeks to communicate with. In this case, the training sequence **34** includes the address of trib **26***a*. As a result, trib **26***b* ignores training sequence **34**. After completion of the training sequence **34**, master transceiver **24** transmits data **36** to trib **26***a* followed by trailing sequence **38**, which signifies the end of the communication session. Similarly, with reference to FIG. **8**, the sequence **170** illustrates a Type A modulation training signal, followed by a Type A modulation data signal. Note that trib **26***b* ignores data **36** and trailing sequence **38** as it was not requested for communication during training sequence **34**.

At the end of trailing sequence **38**, trib **26***a* transmits training sequence **42** to initiate a communication session with master transceiver **24**. Because master transceiver **24** selected trib **26***a* for communication as part of training sequence **34**, trib **26***a* is the only modem that will return a transmission. Thus, trib **26***a* transmits data **44** destined for master transceiver **24** followed by trailing sequence **46** to terminate the communication session.

The foregoing procedure is repeated except master transceiver identifies trib **26***b* in training sequence **48**. In this case, trib **26***a* ignores the training sequence **48** and the subsequent transmission of data **52** and trailing sequence **54** because it does not recognize its address in training sequence **48**. Master transceiver **24** transmits data **52** to trib **26***b* followed by trailing sequence **54** to terminate the communication session. Similarly, with reference to FIG. **8**, sequence **172** illustrates a Type A modulation signal, with notification of a changes to

Types B, followed by a Types B modulation data signal. To send information back to master transceiver **24**, trib **26***b* transmits training sequence **56** to establish a communication session. Master transceiver **24** is conditioned to expect data only from trib **26***b* because trib **26***b* was selected as part of training sequence **48**. Trib **26***b* transmits data **58** to master transceiver **24** terminated by trailing sequence **62**.

The foregoing discussion is based on a two-wire, half-duplex multipoint system. Nevertheless, it should be understood that the concept is equally applicable to four-wire systems.

Consider the circumstance in which master transceiver **24** and trib **26***b* share a common modulation type A while trib **26***a* uses a second modulation type B. When master transceiver attempts to establish A as a common modulation during sequence **32**, trib **26***a* will not be able to understand that communication. Moreover, trib **26***a* will not recognize its own address during training interval **34** and will therefore ignore data **36** and trailing sequence **38**. Master transceiver **24** may time out waiting for a response from trib **26***a* because trib **26***a* will never transmit training sequence **42**, data **44**, and trailing sequence **46** due to the failure of trib **26***a* to recognize the communication request (training sequence **34**) from master transceiver **24**. Thus, if the tribs in a multipoint communication system use a plurality of modulation methods, the overall communication efficiency will be disrupted as specific tribs will be unable to decipher certain transmissions from the master transceiver and any unilateral transmission by a trib that has not been addressed by the master transceiver will violate the multipoint protocol.

As discussed hereinbefore, however, it is desirable to design a multipoint communication system comprising tribs that use a plurality of modulation methods. For example, one moderately priced trib may be used to communicate at a relatively high data rate for some applications, such as Internet access, while another, lower priced, trib is used to communicate at a lower data rate for other applications, such as power monitoring and control. The needs of these different applications cannot be efficiently met by a single modulation. While it is possible to use high performance tribs running state of the art modulation methods such as QAM, CAP, or DMT to implement both the high and low data rate applications, significant cost savings can be achieved if lower cost tribs using low performance modulation methods are used to implement the lower data rate applications.

A block diagram of a master transceiver **64** in communication with a trib **66** in accordance with the principles of the present invention is shown in FIG. **3**. Master transceiver **64** comprises a central processing unit (CPU) **68** in communication with modulator **72**, demodulator **74**, and memory **76**. Memory **76** holds software control program **78** and any data necessary for the operation of master transceiver **64**. Control program **78** includes logic for implementing a plurality of modulation methods. For purposes of illustration, control program **78** can implement both a type A and a type B modulation through modulator **72** and demodulator **74**.

Trib **66** comprises CPU **82** in communication with modulator **84**, demodulator **86**, and memory **88**. Memory **88**, likewise holds software control program **92** and any data necessary for the operation of trib **66**. Control programs **78** and **92**, are executed by CPUs **68** and **82** and provide the control logic for the processes to be discussed herein. Control program **92** includes logic for implementing a particular modulation method, which, for purposes of illustration, is called type X inasmuch as master transceiver **64** is capable of running either type A or a type B modulation method, type X refers to one of those two modulation methods. The master transceiver **64** communicates with trib **66** over communication medium **94**.

Referring now to FIG. **4**, a multipoint communication system **100** is shown comprising a master transceiver **64** along with a plurality of tribs **66-66**. In this example, two tribs **66***a*-**66***a* run a type A modulation method while one trib **66***b* runs a type B modulation method. The present invention permits a secondary or embedded modulation method (e.g., type B) to replace the standard modulation method (e.g., type A) after an initial training sequence. This allows the master transceiver **64** to communicate seamlessly with tribs of varying types.

The operation of multipoint communication system **100** will be described hereafter with reference to the ladder diagram of FIG. **5** and the state diagrams of FIGS. **6** and **7**. A communication session between the master transceiver **64** and a type B trib **66***b* will be discussed first. A state diagram for a type B trib **66***b* is shown in FIG. **6**. Type B trib **66***b* is initialized in state **102** in which type A modulation transmissions are ignored. In the present example, the primary modulation method is type A, thus, as shown in FIG. **5**, master transceiver **64** establishes type A as the primary modulation in sequence **104**. Note that because trib **66***b* responds only to type B modulation transmissions, only the type A tribs **66***a*-**66***a* are receptive to transmission sequence **104**.

To switch from type A modulation to type B modulation, master transceiver **64** transmits a training sequence **106** to type A tribs **66***a* in which these tribs are notified of an impending change to type B modulation. The switch to type B modulation could be limited according to a specific time interval or for the communication of a particular quantity of data. After notifying the type A tribs **66***a* of the change to type B modulation, master transceiver **64**, using type B modulation, transmits data along with an address in sequence **108**, which is destined for a particular type B trib **66***b*. In an example, embedded modulation permits a secondary modulation to replace the usual primary modulation for a user data segment located after a primary training sequence. For example, master transceiver **64** may change to modulation Type B and may convey user information to type B trib **66***b*. The type B trib **66***b* targeted by the master transceiver **64** will transition to state **112** as shown in FIG. **6** upon detecting its own address where it processes the data transmitted in sequence **108**.

After completing transmission sequence **108**, master transceiver **64** transmits a trailing sequence **114** using type A modulation thus notifying all type A tribs **66***a* that type B modulation transmission is complete. If master transceiver **64** has not transmitted a poll request to the type B trib **66***b* in sequence **108**, then the type B trib **66***b* that was in communication with the master transceiver **64** will return to state **102** after timing out based on the particular time interval defined for the type B modulation transmission or transfer of the particular quantity of data. Note that the trailing sequence **114** is ineffective in establishing the termination of a communication session between master transceiver **64** and a type B trib **66***b* because the trailing sequence is transmitted using type A modulation.

If, however, master transceiver **64** transmitted a poll request in sequence **108**, then the type B trib **66***b* transitions to state **116** where it will transmit data, using type B modulation, to master transceiver **64** in sequence **118**. After completion of this transmission, the type B trib **66***b* returns to state **102** where type A transmissions are ignored.

With reference to FIG. **5** and FIG. **7**, a communication session between the master transceiver **64** and a type A trib **66***a* will now be discussed. A state diagram for a type A trib

66*a* is shown in FIG. **7**. A type A trib **66***a* is initialized in state **122** in which it awaits a type A modulation training sequence. If, however, master transceiver transmits a training sequence in which the type A tribs **66***a*-**66***a* are notified of a change to type B modulation as indicated by sequence **106**, then a transition is made to state **124** where all type B transmissions are ignored until a type A modulation trailing sequence (e.g., sequence **114**) is detected. Upon detecting the type A trailing sequence, a type A trib **66***a* returns to state **122** where it awaits a training sequence.

To initiate a communication session with a type A trib **66***a*, master transceiver **64** transmits a training sequence **126** in which an address of a particular type A trib **66***a* is identified. The identified type A trib **66***a* recognizes its own address and transitions to state **128** to receive data from master transceiver **64** as part of sequence **132**.

After completing transmission sequence **132**, which may include a user data segment transmitted using the usual primary (e.g., type A) modulation, master transceiver **64** transmits a trailing sequence **134** using type A modulation signifying the end of the current communication session. If master transceiver **64** has not transmitted a poll request to the type A trib **66***a* in sequence **132**, then the type A trib **66***a* that was in communication with the master transceiver **64** will return to state **122** after receiving trailing sequence **134**.

If, however, master transceiver **64** transmitted a poll request in sequence **132**, then the type A trib **66***a* transitions to state **136** after receiving trailing sequence **134** where it will transmit training sequence **138**, followed by data sequence **142**, and terminated by trailing sequence **144** all using type A modulation. After completion of these transmissions, the type A trib **66***a* returns to state **122** to await the next type A modulation training sequence by master transceiver **64**.

The control programs **78** and **92** of the present invention can be implemented in hardware, software, firmware, or a combination thereof In the preferred embodiment(s), the control programs **78** and **92** are implemented in software or firmware that is stored in a memory and that is executed by a suitable instruction execution system.

The control programs **78** and **92**, which comprise an ordered listing of executable instructions for implementing logical functions, can be embodied in any computer-readable medium for use by or in connection with an instruction execution system, apparatus, or device, such as a computer-based system, processor-containing system, or other system that can fetch the instructions from the instruction execution system, apparatus, or device and execute the instructions. In the context of this document, a "computer-readable medium" can be any means that can contain, store, communicate, propagate, or transport the program for use by or in connection with the instruction execution system, apparatus, or device. The computer readable medium can be, for example but not limited to, an electronic, magnetic, optical, electromagnetic, infrared, or semiconductor system, apparatus, device, or propagation medium. More specific examples (a nonexhaustive list) of the computer-readable medium would include the following: an electrical connection (electronic) having one or more wires, a portable computer diskette (magnetic), a random access memory (RAM) (magnetic), a read-only memory (ROM) (magnetic), an erasable programmable read-only memory (EPROM or Flash memory) (magnetic), an optical fiber (optical), and a portable compact disc read-only memory (CDROM) (optical). Note that the computer-readable medium could even be paper or another suitable medium upon which the program is printed, as the program can be electronically captured, via for instance optical scanning of the paper or other medium, then compiled, interpreted or otherwise processed in a suitable manner if necessary, and then stored in a computer memory.

In concluding the detailed description, it should be noted that it will be obvious to those skilled in the art that many variations and modifications can be made to the preferred embodiment without substantially departing from the principles of the present invention. All such variations and modifications are intended to be included herein within the scope of the present invention, as set forth in the following claims. Further, in the claims hereafter, the corresponding structures, materials, acts, and equivalents of all means or step plus function elements are intended to include any structure, material, or acts for performing the functions with other claimed elements as specifically claimed.

What is claimed:

1. A master communication device configured to communicate with one or more slave transceivers according to a master/slave relationship in which a slave communication from a slave device to the master communication device occurs in response to a master communication from the master communication device to the slave device, the master communication device comprising:

a master transceiver configured to transmit a first message over a communication medium from the master transceiver to the one or more slave transceivers, wherein the first message comprises:

first information modulated according to a first modulation method,

second information, including a payload portion, modulated according to the first modulation method, wherein the second information comprises data intended for one of the one or more slave transceivers and

first message address information that is indicative of the one of the one or more slave transceivers being an intended destination of the second information; and

said master transceiver configured to transmit a second message over the communication medium from the master transceiver to the one or more slave transceivers wherein the second message comprises:

third information modulated according to the first modulation method, wherein the third information comprises information that is indicative of an impending change in modulation to a second modulation method, and

fourth information, including a payload portion, transmitted after transmission of the third information, the fourth information being modulated according to the second modulation method, the second modulation method being of a different type than the first modulation method, wherein the fourth information comprises data intended for a single slave transceiver of the one or more slave transceivers, and

second message address information that is indicative of the single slave transceiver being an intended destination of the fourth information; and

wherein the second modulation method results in a higher data rate than the first modulation method.

2. The master communication device as in claim **1**, wherein the master transceiver is configured to communicate over the communication medium in accordance with a multi-point communication network communication architecture.

3. The master communication device as in claim **1**, wherein the master transceiver is configured to transmit the first message before the second message.

4. The method as in claim 1, wherein the master transceiver is configured to transmit the first message after the second message.

5. The master communication device as in claim 1, wherein the master transceiver is configured additional data modulated according to the first modulation method after transmitting the fourth information.

6. The master communication device of claim 1, wherein the payload portion included in the fourth information is provided for a high data rate application.

7. The master communication device as in claim 6, wherein the high data rate application is configured to access the Internet.

8. The master communication device of claim 1, wherein the payload portion included in the second information is provided for a low data rate application.

9. The master communication device of claim 8, wherein the low data rate application is selected from the group consisting of: power monitoring or control applications.

10. The master communication device as in claim 1, wherein the master transceiver is configured to receive slave data from the single slave transceiver of the one or more slave transceivers, and the slave data is received after transmission of the second message and is modulated according to the second modulation method.

11. The master communication device as in claim 10, wherein the slave data from the single slave transceiver is received in response to a request sent from the master transceiver to the single slave transceiver, the request indicating that the master transceiver requests data from the single slave transceiver.

12. The master communication device as in claim 1, wherein the second information comprises user data.

13. The master communication device as in claim 1, wherein the fourth information comprises user data.

14. The master communication device as in claim 1, wherein the master transceiver is configured to transmit a plurality of user data messages, and the first and second messages correspond to messages in the plurality of user data messages.

15. The master communication device as in claim 14, wherein each of the plurality of user data messages comprises message-specific first information and message-specific second information, and for each of the plurality of user data messages:

the message-specific first information is modulated according to the first modulation method and the message-specific first information is indicative of whether the message-specific second information will be modulated using a different type of modulation method than is used for the message-specific first information; and

the user data message is indicative of a message-specific slave transceiver from among the one or more slave transceivers being an intended destination of the message-specific second information.

16. The master communication device as in claim 15, wherein:

for the first message, the message-specific first information comprises the first information and the message-specific second information comprises the second information; and

for the second message, the message-specific first information comprises the third information and the message-specific second information comprises the fourth information.

17. The master communication device as in claim 15, wherein the message-specific first information is indicative of whether the message-specific second information will be modulated according to the first modulation method or the second modulation method.

18. The master communication device as in claim 1, wherein the master transceiver is configured to transmit a third message, wherein the third message comprises:

fifth information, modulated according to the first modulation method, wherein the fifth information is indicative of an impending change in modulation to the second modulation method;

sixth information, including a payload portion, transmitted after the fifth information and being modulated according to the second modulation method, wherein the sixth information comprises additional data intended for an individual slave transceiver of the one or more slave transceivers, and

third message address information that is indicative of the individual slave transceiver of the one or more slave transceivers being an intended destination of the sixth information.

19. The master communication device as in claim 18, wherein the master transceiver is configured to transmit the third message after the transmitting of the first message and after the transmitting of the second message.

20. The master communication device as in claim 18, wherein the single slave transceiver and the individual slave transceiver are the same slave transceiver.

21. The master communication device as in claim 1, wherein the first information that is included in the first message comprises the first message address data.

22. A communication device configured to communicate according to a master/slave relationship in which a slave communication from a slave to a master occurs in response to a master communication from the master to the slave, the device comprising:

a transceiver in the role of the master according to the master/slave relationship that is configured to send at least a plurality of communications, wherein each communication from among said plurality of communications comprises at least a respective first portion and a respective payload portion, wherein each communication from among said plurality of communications is addressed for an intended destination of the respective payload portion of that communication, and wherein for each communication from among said plurality of communications:

said respective first portion is modulated according to a first modulation method from among at least two types of modulation methods, wherein the at least two types of modulation methods comprise the first modulation method and a second modulation method, wherein the second modulation method is of a different type than the first modulation method,

said respective first portion comprises an indication of which of the first modulation method and the second modulation method is used for modulating respective payload data in the respective payload portion, and

the payload data is modulated according to at least one of the first modulation method or the second modulation method in accordance with what is indicated by the respective first portion;

the transceiver further configured to send at least a first communication of the plurality of communications such that payload data included in a payload portion of the first communication is modulated according to the second modulation method based on a first portion of the first communication indicating that the second modula-

tion method will be used for modulating the payload data in the payload portion of the first communication, wherein the payload data is included in the first communication after the first portion of the first communication;

the transceiver further configured to send at least a second communication of the plurality of communications such that payload data included in a payload portion of the second communication is modulated according to the first modulation method based on a first portion of the second communication indicating that the first modulation method will be used for modulating the payload data in the payload portion of the second communication.

23. The communication device as in claim **22**, wherein the transceiver is further configured to receive at least a first response from a slave transceiver based on sending the first communication, and the first response comprises at least first response data that modulated according to the second modulation method.

24. The communication device as in claim **23**, wherein the first response was explicitly requested in the first communication.

25. The communication device as in claim **23**, Wherein the transceiver is further configured to receive at least a second response based on sending the second communication, and the second response comprises at least second response data that is modulated according to the first modulation method.

26. A master communication device configured to communicate according to a master/slave relationship in which a slave communication from a slave device to the master communication device occurs in response to a master communication from the master communication device to the slave device, the master communication device comprising:

a transceiver configured to transmit signals over a communications medium to a slave device using at least two different types of modulation methods and to receive one or more responses over the communication medium that comprise at least respective response data that is modulated according to one of the at least two different types of modulation methods, the at least two different types of modulation methods comprising a first modulation method and a second modulation method, wherein the transmitted signals comprise first transmitted signals and second transmitted signals, the first transmitted signals comprise at least two transmission sequences, the at least two transmission sequences include a first transmission sequence and a second transmission sequence, the transceiver is configured to transmit the first transmission sequence using the first modulation method, and the transceiver is configured to transmit the second transmission sequence using the second modulation method wherein:

the first transmission sequence includes information that is indicative of an impending change in modulation method from the first modulation method to the second modulation method,

the second transmission sequence includes a payload portion that is transmitted after the first transmission sequence,

the first transmitted signals include first address information that is indicative of the slave device being an intended destination of the payload portion,

the second transmitted signals comprise at least a third transmission sequence and a fourth transmission sequence,

the transceiver is configured to transmit the third transmission sequence using the first modulation method,

the transceiver is configured to transmit the fourth transmission sequence using the first modulation method,

the third transmission sequence includes information indicative that the fourth transmission sequence will be transmitted using the first modulation method,

the fourth transmission sequence includes a second payload portion that is transmitted after the third transmission sequence, and

the second transmitted signals include second address information that is indicative of a specified slave device being an intended destination of the second payload portion .

27. The master communication device as in claim **26**, wherein the first transmission sequence also includes information that is indicative of the type of modulation method used for the second transmission sequence.

28. The master communication device as in claim **26**, wherein the master communication device is configured to implement a polled multipoint protocol.

29. The master communication device as in claim **26**, wherein the first transmission sequence includes a training signal.

30. The master communication device as in claim **29**, wherein the training signal confirms that a slave may communicate using a particular type of modulation method.

31. The master communication device as in claim **29**, wherein the training signal establishes signal level compensation.

32. The master communication device as in claim **29**, wherein the training signal establishes a recovery time.

33. The master communication device as in claim **29**, wherein the training signal permits channel equalization.

34. The master communication device as in claim **29**, wherein the training signal permits echo cancellation.

35. The master communication device as in claim **29**, wherein the training signal includes parameters for optimizing performance.

36. The master communication device as in claim **29**, wherein the training signal includes parameters for the selection of optional features.

37. The master communication device as in claim **26**, wherein the transceiver comprises a modulator configured to modulate information according to one or more of the first modulation method or the second modulation method.

38. The master communication device as in claim **37**, wherein the transceiver further comprises a demodulator, the demodulator is configured to demodulate information from a signal transmitted by a slave, and the signal transmitted by the slave is modulated according to the first modulation method or the second modulation method.

39. The master communication device as in claim **38**, wherein the transceiver further comprises a central processing unit (CPU) operably coupled to the modulator, said CPU configured to operate according to programmed instructions to select either said first modulation method or said second modulation method.

40. The master communication device as in claim **39**, wherein the transceiver further comprises a memory device operably coupled to said CPU, and wherein said memory device is configured to store said programmed instructions.

41. The master communication device as in claim **26**, wherein the second modulation method communicates at a data rate that is higher than that of the first modulation method.

42. The master communication device as in claim **41**, wherein said second modulation method is used for an application requiring Internet access.

43. The master communication device as in claim **26**, wherein at least one of said first or second modulation methods implements phase modulation.

44. The master communication device as in claim **43**, wherein said at least one of said first or second modulation methods also implements amplitude modulation.

45. The master communication device as in claim **26**, wherein at least one of said first or second modulation methods implements quadrature amplitude modulation.

46. The master communication device as in claim **26**, wherein at least one of said first or second modulation methods implements discrete multitone modulation.

47. The master communication device as in claim **26**, wherein said master communication device is configured to communicate with a first slave using said first modulation method and to communicate with a second slave using said second modulation method.

48. The master communication device as in claim **47**, wherein said transceiver is configured to transmit data in a third payload portion according to said first modulation method, and wherein said transceiver is configured to receive a slave response from a slave device with a received payload portion modulated using the first modulation method .

49. The master communication device as in claim **26**, wherein said transceiver is configured to receive transmission signals from a slave device according to one or more of said first modulation method or said second modulation method.

50. The master communication device as in claim **26**, wherein said master communication device is configured to operate in a multipoint network with a plurality of slave devices.

51. The master communication device as in claim **26**, wherein the master communication device is configured to transmit a trailing signal to complete the master communication transmission.

52. The master communication device as in claim **26**, wherein the master transceiver is configured to transmit a plurality of user data messages, wherein each of the plurality of user data messages comprises message-specific first information and message- specific second information, and for each of the plurality of user data messages:

the message-specific first information is modulated according to the first modulation method and the message-specific first information is indicative of whether the message-specific second information will be modulated using a different type of modulation method than is used for the message-specific first information; and the user data message is indicative of a message-specific slave transceiver from among one or more slave transceivers being an intended destination of the message-specific second information.

* * * * *

IN THE UNITED STATES PATENT AND TRADEMARK OFFICE

Inventor: Gordon F. Bremer	§	Attorney Docket No.: 110797-0019-502
U.S. Patent No. 8,457,228	§	Customer No.: 28120
Formerly Application No. 13/198,568	§	
Issue Date: June 4, 2013	§	Requesters: Samsung Electronics Co., Ltd.,
Filing Date: August 4, 2011	§	Samsung Electronics America, Inc.
Former Group Art Unit: 2633	§	
Former Examiner: Dac Ha	§	

For: SYSTEM AND METHOD OF COMMUNICATION USING AT LEAST TWO MODULATION METHODS

MAIL STOP *EX PARTE* REEXAM
Central Reexamination Unit
Office of Patent Legal Administration
Commissioner for Patents
P.O. Box 1450
Alexandria, VA 22313-1450

REQUEST FOR *EX PARTE* REEXAMINATION OF U.S. PATENT NO. 8,457,228 PURSUANT TO 35 U.S.C. § 302, 37 C.F.R. § 1.510

Pursuant to 35 U.S.C. § 302 and 37 C.F.R. § 1.510, Samsung Electronics Co., Ltd. and Samsung Electronics America, Inc. (the "Requesters") hereby request *ex parte* reexamination of claim 21 (the "Challenged Claim") of U.S. Patent No. 8,457,228 ("the '228 patent"), which issued from U.S. Patent Application Serial No. 13/198,568, filed August 4, 2011 ("the '568 Application"). (A complete copy of the '228 patent is attached as Exhibit A, a copy of the '568 application as filed is attached as Exhibit B, and a copy of the prosecution history for the '228 patent (other than the prior art of record) is attached as Exhibit C ("the '228 Prosecution History")). Pursuant to 37 C.F.R. § 1.510(b)(6), Requesters certify that the statutory estoppel

provisions of 35 U.S.C. §§ 315(e)(1) or 325(e)(1) do not prohibit Requesters from filing this Request.[1]

Requesters assert herein that substantial new questions of patentability exist as to claim 21 of the '228 patent based on a prior art reference, Snell, filed on March 17, 1997 and issued on November 9, 1999, that was not considered during original prosecution, along with various additional references: four references that were not and two references that were before the United States Patent and Trademark Office ("Patent Office" or "USPTO") during the original prosecution or *inter partes* review of the '228 patent. As detailed below, claim 21 of the '228 patent is rendered obvious by the references cited herein by the Requesters.[2]

Because the challenged patent is involved in pending litigation, Requesters respectfully request that, consistent with 35 U.S.C. § 305 and MPEP § 2261, all proceedings associated with this reexamination be conducted not only with the "special dispatch" accorded all

[1] Pursuant to 37 C.F.R. § 1.565, the Requesters provide notice that the Patent Owner Rembrandt Wireless Technologies, LP ("Rembrandt" or "Patent Owner") has asserted the '228 patent in *Rembrandt Wireless Techs., LP v. Samsung Elecs. Co.*, C.A. No. 2:13-cv-00213-JRG (E.D. Tex.) (the "Rembrandt Litigation"). On February 13, 2015, a jury found that claim 21 of the '228 patent were infringed and, on the record then before it, not invalid. *Rembrandt Wireless Techs., LP v. Samsung Elecs. Co.*, C.A. No. 2:13-cv-00213-JRG, Dkt. 288 (E.D. Tex.). The issue of post-trial relief was severed and assigned a separate case number, styled as *Rembrandt Wireless Techs., LP v. Samsung Elecs. Co*, C.A. No. 2:16-cv-00170-JRG, Dkt. 2 (E.D. Tex.). The defendants in the above litigation have appealed the decision to the U.S. Court of Appeals for the Federal Circuit in *Rembrandt Wireless Techs., LP v. Samsung Elecs. Co.*, No. 2016-1729 (Fed. Cir.). In addition, the '228 patent has been involved in multiple *inter partes* reviews (IPRs) ("the Rembrandt IPRs"). Three petitions for IPR were instituted and have resulted in final written decisions (*Samsung Elecs. Co. v. Rembrandt Wireless Techs., LP*, IPR2014-00892, Pap. 46 (Final Written Decision) (Sept. 24, 2015); *Samsung Elecs. Co. v. Rembrandt Wireless Techs., LP*, IPR2014-00893, Pap. 44 (Final Written Decision) (Sept. 24, 2015); *Samsung Elecs. Co. v. Rembrandt Wireless Techs., LP*, IPR2014-00895, Pap. 44 (Final Written Decision) (Sept. 24, 2015). Four petitions for IPR were denied (*Samsung Elecs. Co. v. Rembrandt Wireless Techs., LP*, IPR2014-00889, Pap. 8 (Decision on Institution) (Dec. 10, 2014); *Samsung Elecs. Co. v. Rembrandt Wireless Techs., LP*, IPR2014-00890, Pap. 8 (Decision on Institution) (Dec. 10, 2014); *Samsung Elecs. Co. v. Rembrandt Wireless Techs., LP*, IPR2014-00891, Pap. 8 (Decision on Institution) (Dec. 10, 2014); *Samsung Elecs. Co. v. Rembrandt Wireless Techs., LP*, IPR2015-00555, Pap. 20 (Decision on Institution) (June 19, 2015)).

[2] In the context of the present Request, the standard for claim interpretation during patent examination as provided in MPEP § 2111 (Claim Interpretation; Broadest Reasonable Interpretation) is applied.

reexaminations, but also with the "priority over all other cases" accorded reexaminations of patents involved in litigation. MPEP § 2261. In the Rembrandt Litigation, a jury imposed a verdict of $15.7 million based in part on the jury's verdict concerning infringement of challenged claim 21 of the '228 patent. As shown in this Request – based on combinations of prior art that were never previously considered by the Office – claim 21 should have never issued. In light of the Patent Owner's demonstrated intent to assert these invalid claims, timely conduct of the requested reexamination is of particular importance to the public. [3]

[3] Requesters are also seeking reexamination of U.S. Patent No. 8,023,580 ("the '580 patent"), of which the '228 patent is a continuation.

TABLE OF CONTENTS

I. BACKGROUND OF THE REQUEST 1

II. SUBSTANTIAL NEW QUESTIONS OF PATENTABILITY 4

A. Listing of Prior Art Patents and Printed Publications 4

B. Statement Setting Forth Each Substantial New Question of Patentability 5

C. Background and Prosecution of the '228 Patent 7

D. Secondary Considerations 16

III. DETAILED EXPLANATION OF THE PERTINENCE AND MANNER OF APPLYING THE PRIOR ART REFERENCES TO EVERY CLAIM FOR WHICH REEXAMINATION IS REQUESTED 18

A. The PTAB's Constructions of the Terms "Modulation" and Different "Type[s]" of Modulation Methods 19

B. Overview of Prior Art 23

C. SNQ-1: Unpatentability of Claim 21 Under 35 U.S.C. § 103 Over Snell, Yamano and Kamerman 39

D. SNQ-2: Unpatentability of Claim 21 Under 35 U.S.C. § 103 Over Snell, Harris 4064.4, Harris AN9614, Yamano and Kamerman 62

E. SNQ-3: Unpatentability of Claim 21 Under 35 U.S.C. § 103 Over Snell, Harris 4064.4, the Admitted Prior Art, Upender, Yamano, and Kamerman 87

IV. CONCLUSION 120

Rembrandt Wireless
Ex. 2012
Apple Inc. v. Rembrandt Wireless Technologies, LP, IPR2020-00033
Page 817

TABLE OF EXHIBITS

Exhibit	Description
Exhibit A	U.S. Patent No. 8,457,228 ("the '228 patent")
Exhibit B	U.S. Application No. 13/198,568 ("the '568 Application") (consecutive page numbers added for ease of citation)
Exhibit C	File History of U.S. Patent No. 8,457,228 ("the '228 Prosecution History") (other than the prior art of record) (consecutive page numbers added for ease of citation)
Exhibit D	U.S. Patent No. 5,982,807 ("Snell")
Exhibit E	Andren, C. *et al.*, *Using the PRISM™ Chip Set for Low Data Rate Applications*, Harris Semiconductor Application Note No. AN9614, March 1996 ("Harris AN9614")
Exhibit F	*HSP3824 Direct Sequence Spread Spectrum Baseband Processor*, Harris Semiconductor File No. 4064.4, Oct. 1996 ("Harris 4064.4") (consecutive page numbers added for ease of citation)
Exhibit G	Declaration of Jon Mears; Exhibit A thereto (Upender *et al.*, "Communication Protocols for Embedded Systems," *Embedded Systems Programming*, Vol. 7, Issue 11, November 1994. ("Upender"))
Exhibit H	U.S. Patent No. 6,075,814 ("Yamano")
Exhibit I	Kamerman, A., *Throughput Density Constraints for Wireless LANs Based on DSSS,* IEEE 4th International Symposium on Spread Spectrum Techniques and Applications Proceedings, Mainz, Germany, 1996, pp. 1344-1350 vol.3 ("Kamerman") (consecutive page numbers added for ease of citation)
Exhibit J	Office Action in File History of U.S. Application No. 09/205,205 (issued as U.S. Patent No. 6,614,838), mailed June 28, 2001 (consecutive page numbers added for ease of citation)
Exhibit K	Applicant Response in File History of U.S. Application No. 09/205,205 (issued as U.S. Patent No. 6,614,838), dated Oct. 1, 2001 (consecutive page numbers added for ease of citation)
Exhibit L	File History of U.S. Patent No. 5,982,807 (other than the prior art of record) (consecutive page numbers added for ease of citation)

Exhibit M	Applicant Response in File History of U.S. Application No. 12/543,910 (issued as U.S. Patent No. 8,023,580), dated Mar. 1, 2011 ("3/1/2011 Reply in '580 Patent")

I. BACKGROUND OF THE REQUEST

The '228 patent relates generally to "a data communications system in which a plurality of modulation methods are used to facilitate communication among a plurality of modem types." '228 patent at 1:21-25. According to the '228 patent, messages – such as those shown in the '228 patent's Figure 8 – can be sent on the same network using different modulation methods (*e.g.*, type A and type B) by providing an indication in the first sequence of the message of the modulation method used for the second sequence of the message.

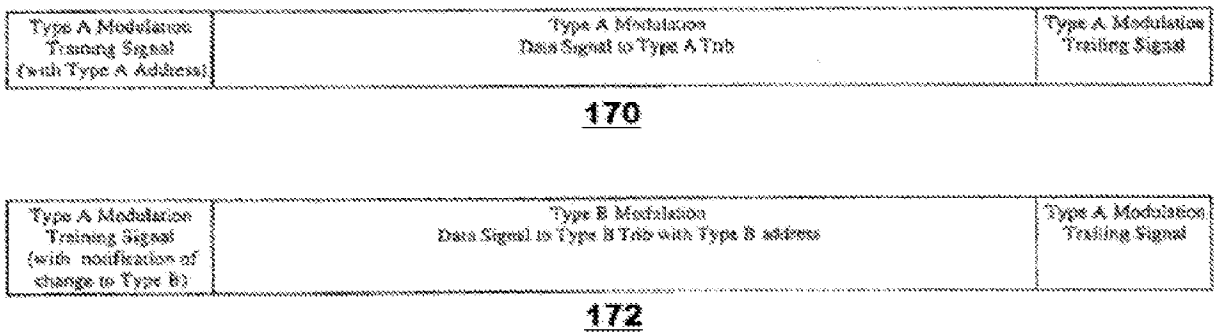

FIG. 8

The Challenged Claim does not recite anything that was not already well known to those of ordinary skill in the art at the time of the earliest claimed priority date for the '228 patent – December 5, 1997. Indeed, in IPR2014-000892, the Board correctly found that independent claim 1 (from which claim 21 depends) is invalid as obvious in view of the prior art. Specifically, the Board correctly found that U.S. Patent No. 5,706,428 ("Boer") disclosed all of the limitations of claim 1, other than the use of a master/slave relationship. The Board also correctly found that the Applicant's admitted prior art, as reflected in the '228 patent specification ("APA"), demonstrated that the use of a master/slave protocol was well-known in

the art, and that an article by Upender *et al.* ("Upender," a copy of which is attached as Exhibit G) provided a motivation to use a master/slave protocol when implementing Boer's system.

As discussed herein, claim 21 is rendered obvious by the combinations of cited references presented in this Request, which demonstrate that all of the elements of claim 21 were well known in the art before the earliest claimed priority date of the '228 patent. The Snell reference cited here by Requesters discloses a transceiver capable of transmitting data packets with preamble, header, and data portions, where the preamble and header are transmitted using BPSK modulation, and the data portion is transmitted using either BPSK or QPSK modulation. Snell alternatively discloses that the preamble and header are transmitted using DBPSK modulation, and the data portion is transmitted using either DBPSK or DQPSK modulation. *See, e.g.*, Snell at Fig. 3, 6:35-36, 6:52-63. As the PTAB correctly found in IPR2014-00892, DBPSK and DQPSK are "different types of modulation methods" in the context of '228 independent claim 1, and thus also of dependent claim 21. IPR2014-00892, Pap. 46 at 19-20; '228 Prosecution History at 355-56. Snell discloses the use of sequences in the header portion that indicate which type of modulation is being used for transmitting the data portion. *See, e.g.*, Snell at 6:52-63. Snell also discloses (through its incorporation of Harris AN9614) the ability to use its teachings with a polled (master/slave) protocol. Harris AN9614 at 3. Alternatively, it would have been obvious to a person of ordinary skill in the art ("POSITA") to use a master/slave protocol when implementing Snell's system based on the same Admitted Prior Art and Upender disclosures that were relied on by the PTAB in IPR2014-00892.

In IPR2014-000892, the PTAB declined to institute review of dependent '228 claim 21 based on the Board's view that the cited prior art failed to disclose the additional limitation of that claim requiring "the first information that is included in the first message comprises the first

message address data." Requesters cite herein the Yamano reference, never previously cited or considered by the Office, which demonstrates that the advantageous placement of address data in the first information portion of a message, as required by dependent claim 21, was obvious and well-known in the art. Specifically, Yamano discloses a packet structure with a preamble and a data portion, where the preamble includes a destination address of the receiving device. It would have been obvious to a POSITA to use Yamano's teaching of including a destination address in the preamble portion of a data packet in implementing Snell's data packet comprising preamble, header, and data portions to beneficially reduce the processing requirements at the receiving device, as also taught by Yamano.

In addition, Kamerman discloses an automatic rate adaptation scheme for transmitting a first data packet where the data is modulated using a first modulation method, such as BPSK (corresponding to a lower data transfer rate), and next transmitting a second data packet where the data is modulated using a second modulation method, such as QPSK (corresponding to a higher data transfer rate). Kamerman at 6, 11-12. It would have been obvious to a POSITA to use Kamerman's teaching of transmitting a first data packet where the data is modulated using a first modulation method and next transmitting a second data packet where the data is modulated using a second modulation method in implementing Snell's system for communicating data packets modulated according to different modulation methods to advantageously maximize the data transfer rate and adapt to changing channel conditions, as also taught by Kamerman. *Id.*

The Applicant's Admitted Prior Art further confirms that a master/slave communication system was well-known to a person of ordinary skill in the art at the time of the earliest asserted priority date. '228 patent at Figs. 1, 2, 3:64-5:7. And Upender describes that a polled

(master/slave) communication protocol is beneficial for its simplicity and determinacy. Upender at 7.

Under any proper understanding of the scope of the Challenged Claim, and certainly under the broadest reasonable construction required here, claim 21 is obvious over Snell in view of Yamano and Kamerman; Snell in view of Harris 4064.4, Harris AN9614, Yamano, and Kamerman; and Snell in view of Harris 4064.4, the Admitted Prior Art, Upender, Yamano, and Kamerman. Moreover, as detailed herein, if Patent Owner were to argue for a construction of the term "type" that is wholly unsupported by the intrinsic record, as it did in the cited Rembrandt Litigation and Rembrandt IPRs, these arguments should be rejected as the PTAB did in the Rembrandt IPRs. *E.g.*, IPR2014-00892, Pap. 46 at 7-13; '228 Prosecution History at 343-49. Requesters respectfully submit that reexamination of the Challenged Claim should be granted, and that the Challenged Claim should be found unpatentable and cancelled for the reasons set forth herein.

II. SUBSTANTIAL NEW QUESTIONS OF PATENTABILITY

Reexamination is respectfully requested for dependent claim 21 of the '228 patent under 35 U.S.C. § 302 and 37 C.F.R. § 1.510.

A. Listing of Prior Art Patents and Printed Publications

Pursuant to 37 C.F.R. § 1.510(b)(3), reexamination of the Challenged Claim is requested in view of the references below and Applicant's admitted prior art of a master/slave communication system depicted in Figures 1 and 2 and described in column 3, line 64 through column 5, line 7 of the '228 patent ("Admitted Prior Art"). The Snell, Harris 4064.4, Harris AN9614, Yamano, and Kamerman references were not previously cited or considered in any rejection by the Examiner during prosecution or by the Board during *inter partes* review of the '228 patent and present new technological teachings that were not previously considered in

Rembrandt Wireless
Ex. 2012
Apple Inc. v. Rembrandt Wireless Technologies, LP, IPR2020-00033
Page 823

connection with the '228 patent. Accordingly, the combinations presented in this request were never previously considered by the Office with respect to the '228 patent.

Exhibit D: U.S. Patent No. 5,982,807, filed on Mar. 17, 1997 and issued on Nov. 9, 1999, to Snell, J. ("Snell").

Exhibit E: Andren, C. *et al*, *Using the PRISM™ Chip Set for Low Data Rate Applications*, Harris Semiconductor Application Note No. AN9614, March 1996 ("Harris AN9614").

Exhibit F: *HSP3824 Direct Sequence Spread Spectrum Baseband Processor*, Harris Semiconductor File No. 4064.4, Oct. 1996 ("Harris 4064.4").

Exhibit G: Declaration of Jon Mears; Exhibit A thereto (Upender *et al.*, "Communication Protocols for Embedded Systems," *Embedded Systems Programming*, Vol. 7, Issue 11, November 1994 – ("Upender")).

Exhibit H: U.S. Patent No. 6,075,814, filed on May 9, 1997 and issued on Jun. 13, 2000, to Yamano, L., *et al.* ("Yamano").

Exhibit I: Kamerman, A., *Throughput Density Constraints for Wireless LANs Based on DSSS*, IEEE 4th International Symposium on Spread Spectrum Techniques and Applications Proceedings, Mainz, Germany, Sept. 22-25, 1996, pp. 1344-1350 vol.3 ("Kamerman").

A Form SB-08 and copies of the cited references are submitted herewith.

B. Statement Setting Forth Each Substantial New Question of Patentability

This Request presents new issues of patentability that were not considered during prosecution or prior *inter partes* review of the '228 patent. As described in more detail in this section, the Snell, Harris 4064.4, Harris AN9614, Yamano, and Kamerman references provide new technological teachings and were not cited by the Applicant or the Examiner or otherwise considered during prosecution of the '228 patent or during *inter partes* review of the '228 patent. Notably, Snell, which is included in every combination of references proposed herein by the Requesters, clearly discloses transmitting data packets where the preamble and header are always modulated using a first modulation method and indicate whether the data portion of the data packet is modulated using a first modulation method or a second modulation method, a limitation

that is fundamental to the Challenged Claim. In addition, Harris 4064.4 (incorporated by Snell) discloses transmitting data packets where the preamble and header are always modulated using a first modulation method and indicate whether the data portion of the data packet is modulated using a first modulation method or a second modulation method. Harris AN9614 (incorporated by Snell) discloses that the system described in Snell may operate according to a polled (master/slave) protocol. Yamano, also included in each proposed combination of references, clearly discloses including a destination address in the preamble portion of a data packet, which is required by dependent claim 21 and is the only limitation of the Challenged Claim that the Board previously found was not disclosed by the prior art that was then before the Board. And Kamerman, also included in each proposed combination of references, clearly discloses transmitting a first data packet where the data is modulated using a first modulation method, such as BPSK (corresponding to a lower data transfer rate) and next transmitting a second data packet where the data is modulated using a second modulation method, such as QPSK (corresponding to a higher data transfer rate).

Although the Board previously considered Applicant's admission that master/slave communication systems are prior art to the '228 patent and Upender's disclosure of motivation to use a master/slave communication system, these teachings were never before considered in connection with the Snell, Harris 4064.4, Harris AN9614, Yamano, or Kamerman references. Thus, the questions of patentability raised in this Request were not raised during the prosecution of the application that led to the '228 patent or during *inter partes* review of the '228 patent. As described below, in combination these new references disclose that all the limitations of the Challenged Claim were well-known and obvious at the time the application for the '228 patent was filed.

Accordingly, the references raise the following substantial new questions of patentability that were not considered during the original prosecution or prior *inter partes* review of the '228 patent:

1. SNQ-1: A substantial new question of patentability as to claim 21 is raised by Snell in view of Yamano and Kamerman.
2. SNQ-2: A substantial new question of patentability as to claim 21 is raised by Snell in view of Harris 4064.4, Harris AN9614, Yamano, and Kamerman.
3. SNQ-3: A substantial new question of patentability as to claim 21 is raised by Snell in view of Harris 4064.4, the Admitted Prior Art, Upender, Yamano, and Kamerman.

In light of the new grounds raised, the combinations of the above references render the Challenged Claim invalid.

C. Background and Prosecution of the '228 Patent

1. The '228 Patent

The '228 patent is directed to the "fields of data communications and modulator/demodulators (modems), and, more particularly, to a data communications system in which a plurality of modulation methods are used to facilitate communication among a plurality of modem types." '228 patent at 1:21-25. The '228 patent describes a problem with communications systems where "communication between modems is generally unsuccessful unless a common modulation method is used." *Id.* at 1:47-49. In the context of a "multipoint architecture" for a network, which utilizes a "master" modem and at least two "tributary" (or "trib") modems, *id.* at 1:58-60, the '228 patent notes that where "one or more of the trib modems are not compatible with the modulation method used by the master, those tribs will be unable to receive communications from the master." *Id.* at 1:60-63.

Because of these issues, the '228 patent asserts that "communication systems comprised of both high performance and low or moderate performance applications can be very cost inefficient to construct." *Id.* at 2:1-3. The '228 patent asserts that the solution used at the time to overcome incompatible modulation methods was the use of high performance modems for all users, which resulted in higher costs. *Id.* at 2:10-18. Thus, the '228 patent asserts that "*what is sought, and what is not believed to be provided by the prior art, is a system and method of communication in which multiple modulation methods* are used to facilitate communication among a plurality of modems in a network, which have heretofore been incompatible." *Id.* at 2:19-23 (emphasis added).

The purported invention of the '228 patent is a system like that shown in Figure 3, in which a master transceiver 64 is capable of transmitting and receiving data using different modulation methods (*e.g.*, what the patent identifies as "type A" modulation and "type B" modulation). *Id.* at 5:47-57. Master transceiver 64 can communicate with tribs, *e.g.*, trib 66, each of which communicates using either a type A or type B modulation method (shown as "type X" in Figure 3), but not both. *Id.* at 5:58-6:3. Figure 4 shows an exemplary network in which master transceiver 64 can communicate using either a type A or type B modulation method. *Id.* at 6:4-8. Trib 66a communicates using a type A modulation method, while trib 66b communicates using a type B modulation method. *Id.*

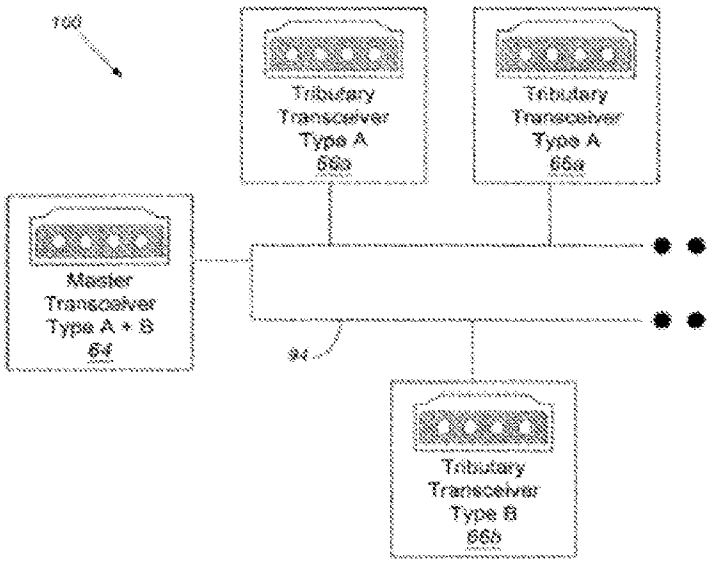

FIG. 4

'228 patent, Figure 4.

According to the '228 patent, the master transceiver can communicate with both type A and type B tribs by providing in the first sequence (*i.e.*, header) of a message an indication of the modulation method that is used for the second sequence (*i.e.*, data portion) of the message. *Id.* at 6:8-36. For example, a master can communicate with a type A trib by transmitting a training sequence using type A modulation followed by a second sequence also in type A modulation. *Id.* at 7:11-16. To send a message to a type B trib (that uses type B modulation), the master transmits a training sequence, again using type A modulation, that provides notification of an impending change to type B modulation. *Id.* at 6:27-30. The second sequence is then transmitted using type B modulation. *Id.* at 6:32-44.

2. Prosecution History of the '228 Patent

The '228 patent issued from U.S. Application No. 13/198,568. The '568 Application was a continuation of U.S. Application No. 12/543,910, which issued as U.S. Patent No. 8,023,580. The '910 Application was a continuation of U.S. Application No. 11/774,803,

which issued as U.S. Patent No. 7,675,965. The '803 Application was a continuation of U.S. Application No. 10/412,878, which issued as U.S. Patent No. 7,248,626. The '878 Application was a continuation-in-part of U.S. Application No. 09/205,205, which became U.S. Patent 6,614,838. The '228, '580, '965, '626, and '838 Patents all claim the benefit of the filing date of U.S. Provisional App. No. 60/067,562, filed Dec. 5, 1997.

The '568 Application that eventually matured into the '228 patent was filed on August 4, 2011 with 20 claims. '568 Application at 19-21. In an April 30, 2012 Office Action, all the claims were rejected for obviousness-type double patenting. '228 Prosecution History at 62-63. In an October 19, 2012 response, Patent Owner made amendments to the specification, cancelled all pending claims, and added forty new claims, numbered 21-61. *Id.* at 107-22. A Notice of Allowance was mailed on November 5, 2012. *Id.* at 131-56. No reasons for allowance accompanied the Notice of Allowance. *Id.* Rather than pay the issue fee, on February 5, 2013, Patent Owner filed an RCE, along with a paper that amended, cancelled, and added claims. *Id.* at 165-81 A Notice of Allowance then issued on April 11, 2013, again with no stated reasons for allowance. *Id.* at 188-91. The '228 patent issued on June 4, 2013. *Id.* at 215.

3. Office Action Response in the '580 Patent

In a March 1, 2011 Response to an Office Action during prosecution of the '910 parent application to the '568 Application ("3/1/2011 Reply in '580 Patent," attached as Exhibit M), Patent Owner amended claim 1, even though it had been allowed. Patent Owner offered the following explanation:

> Applicant thanks Examiner Ha for the indication that claims 1-18, and 37-57 are allowed (office action, p. 7). Applicant has further amended claims 1-2, 9-15, 18, 37-38, and 45-46 with additional recitations to more precisely claim the subject-matter. For example, the language of independent claim 1 has been clarified to refer to *two types of modulation methods, i.e., different families of modulation*

> *techniques, such as the FSK family of modulation methods and the QAM family of modulation methods.* Support for the clarifying amendments can be found throughout the specification, for example [0024], [0025] and [0031] - [0036].

3/1/2011 Reply in '580 Patent at 20 (emphasis added). Patent Owner later relied on this post-allowance statement—made 14 years after the provisional application to which the '580 claims priority was filed—to assert during litigation that the meaning of "different types" of modulation methods referred to "different families" of modulation methods that did not have any overlapping characteristics. The court in the Rembrandt Litigation construed this claim term. *Rembrandt Wireless Techs., LP v. Samsung Elecs. Co., Ltd.*, No. 2:13-cv-00213-JRG-RSP, Dkt. 114, Claim Construction Order (E.D. Tex. July 10, 2014). After the court issued its claim construction order, the PTAB also construed this term, correctly rejecting Rembrandt's argument, explaining that "'[i]t is inappropriate to limit a broad definition of a claim term based on prosecution history that is itself ambiguous.'" IPR2014-00892, Pap. 46 at 10 (quoting *Inverness Med. Switz. GmbH v. Warner Lambert Co.*, 309 F.3d 1373, 1382 (Fed. Cir. 2002)); '228 Prosecution History at 346.

4. *Inter Partes* Review of the '228 Patent (IPR2014-00892)

On June 4, 2014, Samsung Electronics Co. Ltd., Samsung Electronics America, Inc., Samsung Telecommunications America, LLC, and Samsung Austin Semiconductor, LLC filed a petition for *inter partes* review of claims 1-3, 5, and 10-21 of the '228 patent. IPR2014-00892, Pap. 2 (June 4, 2014). On December 10, 2014, the PTAB instituted *inter partes* review of claims 1–3, 5, and 10–20 of the '228 patent but declined to institute review of claim 21. IPR2014-00892, Pap. 8 at 15 (Dec. 10, 2014); '228 Prosecution History at 255.[4] The PTAB did not

[4] Some documents from the Rembrandt IPRs appear in the file wrapper of the '228 patent, including institution decisions and final written decisions. IPR documents appearing in the file wrapper (attached here as Exhibit C, "'228 Prosecution History") are cited herein both to their locations within Exhibit C and to their original source documents.

institute review of claim 21, finding that the petitioner did not show that the prior art taught the dependent limitation of this claim, which requires "the first information that is included in the first message comprises the first message address data," and that the Petition's "conclusory allegation of design choice does not provide the required articulated reasoning with some rational underpinning to support the legal conclusion of obviousness." IPR2014-00892, Pap. 8 at 14-15; (citation omitted); '228 Prosecution History at 254-55.

On September 24, 2015, in a Final Written Decision, the PTAB correctly found all reviewed claims (claims 1–3, 5, and 10–20), including the independent claim from which the Challenged Claim depends, were unpatentable over U.S. Patent No. 5,706,428 ("Boer") in view of Applicant's admitted prior art of a master/slave communication system, as reflected in the '228 patent specification. IPR2014-00892, Pap. 46 at 22 (Sept. 24, 2015); '228 Prosecution History at 391.

In the Final Written Decision, the PTAB correctly construed the claim terms using their broadest reasonable construction in light of the '228 patent specification. IPR2014-00892, Pap. 46 at 5; '228 Prosecution History at 341. The PTAB correctly construed the claim term "modulation" as having "its customary and ordinary meaning as the process by which some characteristic of a carrier is varied in accordance with a modulating wave." IPR2014-00892, Pap. 46 at 7; '228 Prosecution History at 343.

The PTAB also construed different "type[s]" of modulation methods as "modulation methods that are incompatible with one another," specifically finding that the "DQPSK…modulation method[] [is] incompatible with DBPSK modulation" and thus DQPSK modulation is "a different type" of modulation than DBPSK. IPR2014-00892, Pap. 46 at 13, 19-20; '228 Prosecution History at 349, 355-56. The specification also supports the PTAB's

interpretation of different types of modulation methods as those which are incompatible. The specification addresses the asserted problem of lack of compatibility between modems, stating "what is sought, and what is not believed to be provided by the prior art, is a system and method of communication in which multiple modulation methods are used to facilitate communication among a plurality of modems in a network, which have heretofore been *incompatible*." '228 patent at 2:19-23 (emphasis added); *see also* '228 patent at 1:60-67, 1:29-32, 1:49-54, 2:10-12, 2:14-18, 3:12-14. The provisional application to which the '228 patent claims priority, also explains that if a master uses a modulation method that is not compatible with the modulation method used by a trib, the master cannot communicate with that trib. U.S. Provisional Application No. 60/067,562 at 2 ("…the master communicates to all tribs with a single modulation method. If one or more of the tribs is not compatible, the master cannot communicate with that trib."). In construing the meaning of different "type[s]" of modulation methods, the PTAB correctly rejected Patent Owner's proffered construction after thorough consideration of the prosecution history of the '228 patent and of the '580 patent, including the Response dated March 1, 2011. IPR2015-00892, Pap. 46 at 7-13; '228 Prosecution History at 343-349.

The PTAB further found that the '228 patent disclosed admitted prior art of master/slave communication systems, agreeing that "the '228 patent's disclosure of polled multipoint communications using masters and slaves, depicted in Figures 1 and 2 and described in column 3, line 64 through column 5, line 7, contains material that may be used as prior art against the patent under 35 U.S.C. § 103(a)." IPR2014-00892, Pap. 46 at 13; '228 Prosecution History at 349. The PTAB further found that Upender provided a motivation to combine the master/slave relationship of the admitted prior art with Boer. IPR2014-00892, Pap. 46 at 17-19; '228 Prosecution History at 353-55. The PTAB noted that Upender states that polling is one of the

Rembrandt Wireless
Ex. 2012
Apple Inc. v. Rembrandt Wireless Technologies, LP, IPR2020-00033
Page 832

more popular protocols for embedded systems "because of its simplicity and determinacy" and "teaches that master/slave protocols were widely used and a good choice for simple systems." IPR2014-00892, Pap. 46 at 16-17; '228 Prosecution History at 352-53. The PTAB agreed that Upender provided appropriate motivation to use the simpler master/slave protocol in conjunction with Boer. IPR2014-00892, Pap. 46 at 18 ("one of ordinary skill in the art would have found it obvious to use a different prior art communication protocol (*e.g.*, a simpler protocol) when using multiple data rates as described by Boer."); '228 Prosecution History at 354.

Rembrandt did not appeal the PTAB's finding of unpatentability.

5. *Inter Partes* Reviews of the '228 Patent (IPR2014-00893 and IPR2014-00895)

On June 4, 2014, Samsung Electronics Co. Ltd., Samsung Electronics America, Inc., Samsung Telecommunications America, LLC, and Samsung Austin Semiconductor, LLC filed a petition for *inter partes* review of claims 22, 23 and 25 of the '228 patent. IPR2014-00893, Pap. 2 (June 4, 2014). On December 10, 2014, the PTAB instituted *inter partes* review of claims 22, 23, and 25 of the '228 patent. IPR2014-00893, Pap. 8 at 14 (Dec. 10, 2014). On September 24, 2015, the PTAB correctly found claims 22, 23, and 25 unpatentable over Boer in view of Applicant's admitted prior art of a master/slave communication system, as reflected in the '228 patent specification. IPR2014-00893, Pap. 44 at 22 (Sept. 24, 2014).

Also on June 4, 2014, Samsung Electronics Co. Ltd., Samsung Electronics America, Inc., Samsung Telecommunications America, LLC, and Samsung Austin Semiconductor, LLC filed a petition for *inter partes* review of claims 26-29, 31, 36-41, 43, and 47-52 of the '228 patent. IPR2014-00895, Pap. 2 (June 4, 2014). On December 10, 2014, the PTAB instituted *inter partes* review of claims 26-29, 31, 36-41, 43, and 47-52 of the '228 patent. IPR2014-00895, Pap. 8 at 15-16 (Dec. 10, 2014). On September 24, 2015, the PTAB correctly found claims 26-29, 31, 36-

41, 43, and 47-52 unpatentable over Boer in view of Applicant's admitted prior art of a master/slave communication system, as reflected in the '228 patent specification. IPR2014-00895, Pap. 44 at 23 (Sept. 24, 2014).

6. *Inter Partes* Reviews of the '228 Patent (IPR2014-00889, IPR2014-00890, and IPR2014-00891)

On June 4, 2014, Samsung Electronics Co. Ltd., Samsung Electronics America, Inc., Samsung Telecommunications America, LLC, and Samsung Austin Semiconductor, LLC filed a petition for *inter partes* review of claims 1-3, 5, 10, and 11-21 of the '228 patent (IPR2014-00889, Pap. 2 (June 4, 2014)), a petition for *inter partes* review of claims 22, 23, and 25 of the '228 patent (IPR2014-00890, Pap. 2 (June 4, 2014)) and a petition for *inter partes* review of claims 26-29, 31, 43, 47-52 of the '228 patent (IPR2014-00891, Pap. 2 (June 4, 2014)). On December 10, 2014, the PTAB declined to institute *inter partes* review of the '228 patent on any of the three petitions, finding that the petitioner did not make a sufficient showing that the reference relied upon in the petitions (IEEE P802.11, Draft Standard for Wireless LAN, Medium Access Control (MAC) and Physical Layer (PHY) Specification, P802.11D4.0, May 20, 1996) was publicly available before the claimed priority date. IPR2014-00889, Pap. 8 at 10 (Dec. 10, 2014); IPR2014-00890, Pap. 8 at 10 (Dec. 10, 2014); IPR2014-00891, Pap. 8 at 12 (Dec. 10, 2014).

7. *Inter Partes* Review of the '228 Patent (IPR2015-00555)

On January 9, 2015, Samsung Electronics Co. Ltd., Samsung Electronics America, Inc., Samsung Telecommunications America, LLC, and Samsung Austin Semiconductor, LLC filed a petition for *inter partes* review of claim 21 of the '228 patent. IPR2015-00555, Pap. 1 (Jan. 9, 2015). The asserted ground of unpatentability was Boer, in view of U.S. Patent No. 5,537,398 to Siwiak, and further in view of Applicant's admitted prior art of a master/slave communication

system as reflected in the '228 patent specification—a combination of references that is different from the combinations submitted in this Request giving rise to substantial new questions of patentability. On June 19, 2015, the PTAB declined to institute *inter partes* review of the '228 patent under 35 U.S.C. § 325(d), finding that "the same or substantially the same prior art or arguments" had been presented in IPR2014-00892 and that, barring joinder, the petition was time-barred. IPR2015-00555, Pap. 20 at 8-9 (June 19, 2015). In the decision not to institute, the PTAB specifically declined to reach the merits of the grounds presented. *Id.* at 6.

D. Secondary Considerations

This Request demonstrates that claim 21 of the '228 patent is obvious under 35 U.S.C. § 103 based on the references presented here. As discussed below, these clear teachings in the prior art cannot be overcome by any supposed "secondary considerations."

The "ultimate determination of whether an invention is obvious is a legal question based on the totality of the evidence." *See Brown & Williamson Tobacco Corp. v. Philip Morris, Inc.*, 229 F.3d 1120, 1131 (Fed. Cir. 2000) (*citing Richardson-Vicks Inc. v. Upjohn Co.*, 122 F.3d 1476, 1483 (Fed. Cir. 1997)). As set forth in *Graham v. John Deere Co.*, 383 U.S. 1, 17 (1966), those fact determinations involve (1) the scope and content of the prior art, (2) the differences between the prior art and the claimed invention, (3) the level of ordinary skill in the pertinent art, and (4) additional evidence, which may serve as indicia of non-obviousness. This "additional evidence" with respect to obviousness may include "secondary considerations [such] as commercial success, long felt but unsolved needs, [and] failure of others." *Graham*, 383 U.S. at 17. ***However, a lack of invention cannot be outweighed by secondary factors***. *Dow Chem. Co. v. Halliburton Oil Well Cementing Co.*, 324 U.S. 320 (1945). *See also Great Atl. & Pac. Tea Co. v. Supermarket Equip. Corp.*, 340 U.S. 147, 153 (1950) ("[C]ommercial success without invention will not make patentability."); *Brown & Williamson,* 229 F.3d at 1131 ("indicators of

nonobviousness cannot overcome the strong evidence of obviousness") (*citing Newell Cos. v. Kenney Mfg. Co.*, 864 F.2d 757, 769 (Fed. Cir. 1988) ("finding obviousness despite strong evidence of commercial success")).

Any supposed evidence of commercial success is unavailing without a concrete correlation between the merits of the invention and the alleged success. *Richardson-Vicks Inc.*, 122 F.3d at 1483 ("evidence of commercial success proffered by plaintiff is limited to sales data, and does not include evidence of market share, of growth in market share, of replacing earlier units sold by others or of dollar amounts, and no evidence of a nexus between the sales and the merits of the invention") (internal quotation omitted). In order to show the required nexus to the claimed invention for an argument of commercial success, the patent owner would need to show not only the sale of a covered product, but also that customers are choosing the product ***because of*** features that are purportedly within the exclusive boundaries of the '228 patent's claims. In other words, such sales could be pertinent to a "commercial success" argument for obviousness purposes *only* if the patent owner could prove it was these features, and not others, that were driving demand.

The patent owner cannot demonstrate the required nexus. As detailed in this Request, each of the limitations of claim 21, properly construed for reexamination purposes, was actually known and present in the art long before the '228 patent's earliest possible priority date, undercutting any suggestion that any limitation played the required role in generating any supposed "success."

The Applicants also clearly did *not* satisfy any long-felt need, nor was there a failure of others to satisfy any long-felt need. To the contrary, as reflected in the prior art submitted herewith, this is a long-standing art with disclosures addressing, well before the '228 patent's

earliest possible priority date, the same claimed features in claim 21. The clear teachings of prior art preceding the '228 patent's earliest possible priority date belie any claim of a long-felt need or failure by others.

Finally, the Patent Owner's only apparent license (as argued during litigation) resulted from a settlement of litigation. *Rembrandt Wireless Techs., LP v. Samsung Electronics Co.*, Case No. 16-1729, D.I. 34 (Brief for Plaintiff-Appellee Rembrandt Wireless Technologies, LP) at 24, filed Jul. 21, 2016 (Fed. Cir.). Thus, there is nothing to show that the license was attributable to the merits of the claimed invention rather than other considerations, such as a desire to avoid litigation.

The '228 patent claims are based on an idea that was well-known when the Applicants filed for a patent. They are rendered obvious by the prior art, and the overwhelming invalidity of the claims under 35 U.S.C. § 103 cannot be rebutted with secondary considerations.

III. DETAILED EXPLANATION OF THE PERTINENCE AND MANNER OF APPLYING THE PRIOR ART REFERENCES TO EVERY CLAIM FOR WHICH REEXAMINATION IS REQUESTED[5]

As required under 37 C.F.R. § 1.510(b)(2), a detailed explanation of the pertinence and manner of applying the prior art references to the claims is provided here with Requesters' proposed rejections.

As noted above, for purposes of this request, the Requesters construe claim language according to MPEP § 2111, such that claim terms are given their broadest reasonable interpretation. *See In re Am. Acad. of Sci. Tech Ctr.*, 367 F.3d at 1364. When the claims are construed in this manner, or even in a narrower manner, all the claims are unpatentable in view of the prior art references presented herein. In construing the claim language in this manner or as

[5] All emphases and annotations are added unless otherwise noted.

Rembrandt Wireless
Ex. 2012
Apple Inc. v. Rembrandt Wireless Technologies, LP, IPR2020-00033
Page 837

otherwise set forth explicitly or implicitly herein, the Requesters expressly reserve the right to argue a different claim construction in litigation as appropriate to such proceeding.

A. The PTAB's Constructions of the Terms "Modulation" and Different "Type[s]" of Modulation Methods

As an initial matter, Requesters note that the PTAB has already construed the terms "modulation" and different "type[s]" of modulation methods, applying the broadest reasonable interpretation, in an *inter partes* review of claim 1, independent claim from which claim 21 depends. IPR2014-00892, Pap. 46 at 6-13; '228 Prosecution History at 342-49. The PTAB has also construed these same terms in *inter partes* reviews of other claims of the '228 patent, IPR2014-00893, Pap. 44 at 6-13; IPR2014-00895, Pap. 44 at 6-13, and in an *inter partes* review of the '580 patent, *Samsung Elecs. Co. v. Rembrandt Wireless Techs., LP*, IPR2014-00518, Pap. 47 at 5-12 (Final Written Decision) (Sept. 17, 2015).

1. The PTAB's Construction of "Modulation"

In all four IPR decisions, the PTAB properly construed "'modulation' in accordance with its customary and ordinary meaning as the process by which some characteristic of a carrier is varied in accordance with a modulating wave." IPR2014-00892, Pap. 46 at 7; '228 Prosecution History at 343. *See also* IPR2014-00893, Pap. 44 at 7; IPR2014-00895, Pap. 44 at 7; IPR2014-00518, Pap. 47 at 7.

2. The PTAB's Construction of "Different 'Type[s]' of Modulation Methods"

Also in all four IPR decisions, the PTAB properly construed "different 'types' of modulation methods as "modulation methods that are incompatible with one another," IPR2014-00892, Pap. 46 at 13; '228 Prosecution History at 349, and held that "DQPSK and PPM/DQPSK modulation methods are incompatible with DBPSK modulation," IPR2014-00892, Pap. 46 at 19;

Rembrandt Wireless
Ex. 2012
Apple Inc. v. Rembrandt Wireless Technologies, LP, IPR2020-00033
Page 838
IPR2020-00036 Page 00838

'228 Prosecution History at 355. *See also* IPR2014-00893, Pap., 44 at 13, 19; IPR2014-00895, Pap. 44 at 13, 18-19; IPR2014-00518, Pap. 47 at 12, 18.

The specification supports the PTAB's interpretation of different types of modulation methods as those which are incompatible. The specification addresses the asserted problem of lack of compatibility between modems, stating "what is sought, and what is not believed to be provided by the prior art, is a system and method of communication in which multiple modulation methods are used to facilitate communication among a plurality of modems in a network, which have heretofore been *incompatible*." '228 patent at 2:19-23 (emphasis added). The specification further describes the asserted problem as follows:

> If one or more of the trib modems are not compatible with the modulation method used by the master, those tribs will be unable to receive communications from the master. Moreover, repeated attempts by the master to communicate with the incompatible trib(s) will disturb communications with compatible trib(s) due to time wasted in making the futile communication attempts.

'228 patent at 1:60-67.

Indeed, the specification continues to focus on compatibility, or the lack thereof, as the issue which the purported invention addresses. *See also* '228 patent at 1:29-32, 1:49-54, 2:10-12, 2:14-18. The summary section concludes by stating: "[a]nother advantage of the present invention is that a master transceiver can communicate seamlessly with tributary transceivers or modems using incompatible modulation methods." '228 patent at 3:12-14.

Contrary to the plain language of the specification, Patent Owner argued in the Rembrandt IPRs that different "types" of modulation methods should be interpreted to mean "different families of modulation techniques," IPR2014-00892, Pap. 46 at 7; '228 Prosecution History at 343, and that different "families" of modulation methods should be further understood to mean modulation methods that do not vary overlapping characteristics, IPR2014-00892, Pap. 46 at 11-12; '228 Prosecution History at 347-48. Patent Owner relied solely on a single remark

made in the prosecution history of the '580 patent after allowance. In the 3/1/2011 Reply in the '580 patent, Patent Owner amended claim 1 to introduce the term "type," even though claim 1 had been allowed, stating:

> Applicant thanks Examiner Ha for the indication that claims 1-18, and 37-57 are allowed (office action, p. 7). Applicant has further amended claims 1-2, 9-15, 18, 37-38, and 45-46 with additional recitations to more precisely claim the subject-matter. For example, the language of independent claim 1 has been clarified to refer to *two types of modulation methods, i.e., different families of modulation techniques, such as the FSK family of modulation methods and the QAM family of modulation methods.* Support for the clarifying amendments can be found throughout the specification, for example [0024], [0025] and [0031] - [0036].

3/1/2011 Reply in '580 Patent at (emphasis added). Based on the foregoing statement during prosecution, Patent Owner argued to the PTAB that "different families" of modulation methods cannot be based on varying any overlapping characteristics. The PTAB correctly rejected Patent Owner's argument, stating:

> Thus, according to counsel for Patent Owner, two modulation methods that are different in one characteristic but the same in another, e.g., one varying phase and amplitude and the other varying frequency and amplitude, would be regarded as belonging in the same family. Such an understanding of the classification or categorization of "family" in case of partial overlap was not a part of any representation during prosecution history, but presented for the first time by counsel for Patent Owner during oral argument. It reflects ambiguity in the construction proposed by Patent Owner.

IPR2014-00892, Pap. 46 at 11-12; '228 Prosecution History at 347-48.

The PTAB further found that:

> the claim amendments with respect to two "types" of modulation methods were not made in response to a rejection, as the relevant claims had been allowed. Nor do the above remarks explain what a "family" might be, or why FSK is considered to be a member of one "family" and QAM a member of another "family." . . . *Patent Owner's purported "definition" is anything but clear or precise.*

IPR2014-00892, Pap. 46 at 8-9 (citation omitted); '228 Prosecution History at 344-45.

Ultimately, the PTAB concluded that "[t]he prosecution history is, at best, ambiguous. 'It is inappropriate to limit a broad definition of a claim term based on prosecution history that is itself ambiguous.'" IPR2014-00892, Pap. 46 at 10 (quoting *Inverness Med. Switz. GmbH v. Warner Lambert Co.*, 309 F.3d 1373, 1382 (Fed. Cir. 2002)); '228 Prosecution History at 346.

After rejecting Patent Owner's unsupported and ambiguous construction, the PTAB correctly construed different "types" of modulation methods under the broadest reasonable interpretation in light of the specification to mean modulation methods that are incompatible. The PTAB expressly found that:

> In view of the foregoing, we do not interpret a "type" of modulation method as referring to some vague or undefined "family" of modulation methods. We interpret different "types" of modulation methods as modulation methods that are incompatible with one another. Thus, contrary to Patent Owner's construction, two modulation methods that are based on varying the same one of the frequency, amplitude, or phase of the carrier wave may be different "types" of modulation methods.

IPR2014-00892, Pap. 46 at 13; '228 Prosecution History at 349.

Applying this construction to the Boer reference before it, the PTAB correctly found "that DQPSK and PPM/DQPSK modulation methods are incompatible with DBPSK modulation." IPR2014-00892, Pap. 46 at 19; '228 Prosecution History at 355. The PTAB rejected Patent Owner's argument that Boer's disclosure of the same mobile station transmitting and receiving using DBPSK and DQPSK meant that the two methods are compatible:

> whether one "type" of modulation is incompatible with another "type" concerns the method of modulation, not necessarily the modem for carrying out that method. That is, a modem might be designed (as in Boer) to transmit and receive using, separately, two incompatible modulation methods, but that does not mean the two modulation methods are compatible with each other.

IPR2014-00892, Pap. 46 at 20; '228 Prosecution History at 356.

Accordingly, the PTAB correctly found that DQPSK modulation and DBPSK modulation are different "types" of modulation, stating:

> Patent Owner argues that DBPSK and DQPSK are not different "'types" of modulation methods because the methods are within the same "family," because both vary the same fundamental characteristic of a carrier wave – its phase. We do not find Patent Owner's argument to be persuasive because we are not convinced that the broadest reasonable interpretation of "types" of modulation is so limited.

IPR2014-00892, Pap. 46 at 19-20 (citations omitted); '228 Prosecution History at 355-56. *See also* IPR2014-00893, Pap. 44 at 19; IPR2014-00895, Pap. 46 at 19; IPR2014-00518, Pap. 47 at 19.

Should Patent Owner attempt here to argue that DBPSK and DQPSK are not different types of modulation methods, as it appears to have done in the cited Rembrandt Litigation and Rembrandt IPRs, this interpretation of the term "'types' of modulation methods" would not only be wholly unsupported by the claims and the specification of the '228 patent, but it would also directly conflict with the PTAB's interpretation of claim 1 (from which claim 21 depends), which was never appealed by Patent Owner.

B. Overview of Prior Art

1. Overview of Snell

Snell is prior art under at least § 102(e) because it is a U.S. Patent filed by another in the United States on March 17, 1997, which is prior to December 5, 1997, the earliest claimed priority date of the '228 patent. Snell has not been previously cited to or considered by the Patent Office in connection with the '228 patent.

Snell discloses a transceiver that serves as an access point for communicating data with other transceivers connected to a wireless local area network (WLAN). Snell at 1:34-46; *see id.* at 1:47-50, 4:42-47, 5:18-21. Snell's transceiver transmits data packets intended for another transceiver, where the communication may switch on-the-fly between a "first modulation method" (*e.g.*, BPSK) and a "second modulation method" (*e.g.*, QPSK) that is "of a different type than the

first modulation method."[6] *Id.* at 2:61-63 ("The modulator may also preferably include header modulator means for modulating *data packets*."), 1:55-57 ("The PRISM 1 chip set provides all the functions necessary for full or half duplex, direct sequence spread spectrum, *packet communications* at the 2.4 to 2.5 GHz ISM radio band."), 2:27-30 ("It is another object of the invention to provide a spread spectrum transceiver and associated method to permit operation at higher data rates and *which may switch on-the-fly between different data rates and/or formats*."), 7:10-14 ("The variable data may be modulated and demodulated in different formats than the header portion to thereby increase the data rate, and *while a switchover as indicated by the switchover point in FIG. 3, occurs on-the-fly*."), 1:58-61 ("In particular, the HSP3824 baseband processor manufactured by Harris Corporation employs quadrature or bi-phase phase shift keying (QPSK or BPSK) modulation schemes."), 2:15-17 ("Moreover, a WLAN application, for example, may require a change between BPSK and QPSK during operation, that is, on-the-fly."). *See id.* at Abstract, 1:55-61, 2:56-59, Fig. 2, Fig. 3, Fig. 5.

Snell discloses that each data packet transmission is structured with a PLCP preamble and PLCP header and a "payload portion" (*e.g.*, MPDU data). *Id.* at 6:35-36, 6:64-66, 7:5-14, Fig. 3. The PLCP preamble contains SYNC and SFD fields, and the PLCP header contains

[6] As explained in §III.A.2, *supra*, in IPR2014-00892, the Board construed different "type[s]" of modulation methods as "modulation methods that are incompatible with one another," specifically finding that the "DQPSK…modulation method[] [is] incompatible with DBPSK modulation" and thus DQPSK modulation is "a different type" of modulation than DBPSK. IPR2014-00892, Pap. 46 at 13, 19-20; '228 Prosecution History at 349, 355-56. Accordingly, Snell, which provides examples of switching between BPSK and QPSK modulation, and alternatively switching between DBPSK and DQPSK modulation, discloses the claimed feature of changing between different modulation types, even if Snell's "first modulation method" and "second modulation method" each use phase shift keying. In addition, Snell further discloses a SIGNAL field in the header to indicate the modulation method used to modulate the MPDU data, thereby disclosing an indication of an impending change from the first modulation method to the second modulation method or vice-versa.

SIGNAL, SERVICE, LENGTH, and CRC fields. *Id.* at Fig. 3, 6:48-7:14. The MPDU data is the data to be transmitted to the receiving transceiver. *Id.* at 7:5-6 ("*MPDU* is serially provided by Interface 80 and *is the variable data* scrambled for normal operation."); *see also id.* at 7:6-14, Fig. 3.

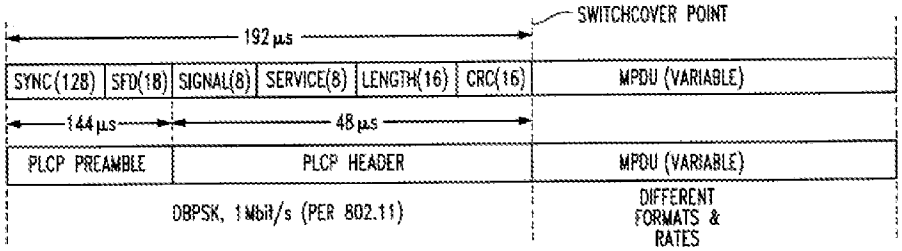

FIG. 3

Id. at Fig. 3.

Snell teaches that the PLCP preamble and PLCP header are always modulated using the "first modulation method" (*e.g.*, BPSK). Snell at 6:35-36 ("The header may always be BPSK"), Fig. 3. Snell further discloses that the SIGNAL field in the PLCP header "indicates" which of the "first modulation method" (*e.g.*, BPSK) and "second modulation method" (*e.g.*, QPSK) is used for modulating the "payload portion" (*e.g.*, MPDU data).

For example, Snell discloses "[n]ow relating to the *PLCP header* 91, *the SIGNAL* is:

0Ah	1 Mbit/s BPSK,
14h	2 Mbit/S QPSK,
37h	5.5 Mbit/s BPSK, and
6Eh	11 Mbit/s QPSK.

"

Snell at 6:52-59. Thus, Snell teaches that the SIGNAL field in the PLCP header includes the symbol "0Ah" to indicate when the MPDU data is modulated using the "first modulation method" (*e.g.*, BPSK at 1 Mbit/s). *Id.* at 6:52-59, 7:1-2, 7:5-14, Fig. 3. Snell also teaches that the SIGNAL field in the PLCP header includes the symbol "14h" to indicate when the MPDU data is

modulated using the "second modulation method" (*e.g.*, QPSK at 2 Mbit/s). *Id.* Snell thus teaches that "[t]he variable data may be modulated and demodulated in different formats than the header portion to thereby increase the data rate, and while a switchover as indicated by the switchover point in FIG. 3, occurs on-the-fly." *Id.* at 7:10-14; *see also, e.g.*, *id.* at Fig. 3, 2:27-30.

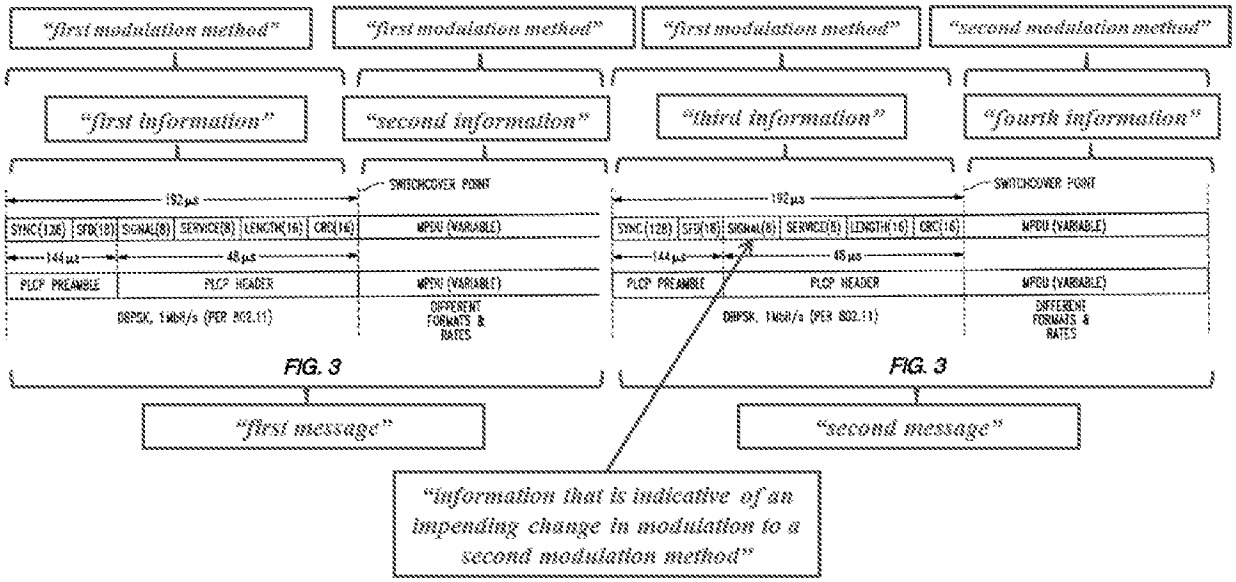

Id. at Fig. 3 (annotated).

Snell teaches communicating multiple data packets with the ability to "switch on-the-fly between different data rates and/or formats." *Id.* at 2:29-30. Based on this disclosure, a person of ordinary skill in the art would have understood that Snell teaches that a series of packets may be sent that switch from using a first modulation method to using a second modulation method for the payload portion of the data packet, as shown in the annotated Figure 3 above. For example, Snell's transceiver transmits a "first message" comprising "first information" (*e.g.*, PLCP preamble and PLCP header) that is "modulated according to a first modulation method" (*e.g.*, BPSK) where the "first information" (*e.g.*, "SIGNAL" field in PLCP header) indicates (*e.g.*, using "0Ah") the modulation type (*e.g.*, BPSK) used for modulating "second information" (*e.g.*, MPDU data). For example, in the "first message," the "SIGNAL" field in the PLCP header uses

a code (*e.g.*, "0Ah") that indicates that the "second information" (*e.g.*, MPDU data) is modulated "according to the first modulation method" (*e.g.*, BPSK at 1 Mbit/s).

Snell's transceiver then transmits a "second message" comprising "third information" (*e.g.*, PLCP preamble and PLCP header) "modulated according to the first modulation method" (*e.g.*, BPSK) where the "third information comprises information" (*e.g.*, "SIGNAL" field in PLCP header) "that is indicative of an impending change in modulation" (*e.g.*, using "14h") "to a second modulation method" (*e.g.*, QPSK) used for modulating "fourth information." For example, in the "second message," the "SIGNAL" field in the PLCP header uses a code (*e.g.*, "14h") that indicates that the "fourth information" (*e.g.*, MPDU data) is modulated "according to the second modulation method" (*e.g.*, QPSK at 2 Mbit/s), wherein the "second modulation method" is of a "different type than the first modulation method." This "SIGNAL" is "indicative of an impending change" from the "first modulation method" to the "second modulation method" because it is indicating a change from, for example, BPSK modulation to QPSK modulation. In addition, transmitting the data using the "second modulation method"— QPSK—results in a data rate of 2 Mbit/s which is higher than transmitting the data using the "first modulation method"— BPSK at 1 Mbit/s.

While Snell describes that the "first modulation method" may be BPSK and the "second modulation method" may be QPSK (which are two different types of modulation methods, *see supra* §III.A.2), Snell alternatively discloses that the "first modulation method" may be differential BPSK ("DBPSK") and the "second modulation method" may be differential QPSK ("DQPSK") (which, again, are two different types of modulation methods, *see id.*). For example, Snell teaches that the PLCP preamble and PLCP header may be modulated using differential BPSK. Snell at 2:56-3:5 ("[t]he modulator may also preferably include header modulator means

for modulating data packets to include *a header at a predetermined modulation and a third data rate defining a third format…. The third format is preferably differential BPSK.*"), 6:64-66 ("*[t]he PLCP preamble and PLCP header are always at 1 Mbit/s, Diff encoded*, scrambled and spread with an 11 chip barker."), Fig. 3. Snell also teaches that the MPDU data may be modulated using either differential BPSK or differential QPSK. *See, e.g.*, Snell at 7:6-8 ("The reference phase for the first symbol of the *MPDU* is the output phase of the last symbol of the header for *Diff Encoding*."), Figs. 2, 5; *see also, e.g.*, Harris 4064.4 (incorporated by reference into Snell at 5:13-17) at 14 ("The preamble and header are always transmitted as *DBPSK* waveforms while the data packets can be configured to be *either DBPSK or DQPSK*."), 14 ("The HSP3824 transmitter is designed as a Direct Sequence Spread Spectrum *DBPSK/DQPSK modulator*."), 14 ("The modulator is capable of switching rate automatically in the case *where the preamble and header information are DBPSK modulated*, and the *data is DQPSK modulated*."), 15 ("The preamble is always transmitted as a *DBPSK* waveform with a programmable length of up to 256 symbols long."), 15 ("Signal Field (8 Bits) - This field indicates whether the data packet that follows the header is modulated as *DBPSK or DQPSK*. In mode 3 the HSP3824 receiver *looks at the signal field to determine whether it needs to switch from DBPSK demodulation into DQPSK demodulation* at the end of the always DBPSK preamble and header fields."), 16 ("Mode 3 - In this mode the preamble is programmable up to 256 bits (all 1's). The header in this mode is using all available fields. *In mode 3 the signal field defines the modulation type of the data packet (DBPSK or DQPSK)* so the receiver does not need to be preprogrammed to anticipate one or the other. *In this mode the device checks the Signal field for the data packet modulation and it switches to DQPSK if it is defined as such in the*

signal field. Note that the preamble and header are always DBPSK [thus] the modulation definition applies only for the data packet.").

2. Overview of Harris 4064.4 (Incorporated by Reference into Snell)

Harris 4064.4 is prior art under at least § 102(e) together with Snell because it is incorporated by reference in its entirety into Snell (Snell at 5:13-17)[7], a U.S. Patent filed by another in the United States on March 17, 1997, which is prior to the earliest '228 patent priority date of December 5, 1997. A copy of Harris 4064.4 was submitted to the Patent Office in an Information Disclosure Statement dated March 17, 1997, in the original filing of U.S. Patent Application No. 08/819,846, from which Snell issued ("the '846 Snell Application"). The file wrapper of the '846 Snell Application (attached as Exhibit L) includes a copy of Harris 4064.4, Exhibit L at 158-97, and a Form PTO-1449 dated March 17, 1997 cites Harris 4064.4, *id.* at 78. Harris 4064.4 is a publication by Harris Corporation dated October 1996 with a 1996 copyright notice by Harris Corporation. Harris 4064.4 at 1; Snell at cover (listing Harris 4064.4 under "Other Publications"), 5:13-17. Harris 4064.4 describes the HSP3824 Direct Sequence (DSSS) baseband processor that was a part of the PRISM chipset developed, manufactured, and sold by Harris Corporation. Harris 4064.4 at 1 ("The Harris HSP3824 Direct Sequence (DSSS) baseband processor is part of the PRISM™ 2.4 GHz radio chipset…"; "Ordering Information… Part No. HSP 3824VI"); Snell at 1:47-63, 5:8-17, 5:31-33. Harris 4064.4 is also prior art under at least §§ 102(a) and (b) because it is a printed publication that was publicly available at least as

[7] Snell expressly incorporates by reference "the entire disclosure" of Harris 4064.4 (Snell at 5:8-17, 5:31-33). *See Harari v. Lee*, 656 F.3d 1331, 1335-36 (Fed. Cir. 2011) ("the entire '579 application disclosure was incorporated by the broad and unequivocal language: 'The disclosures of the two applications are hereby incorporate[d] by reference.'"); *Advanced Display Sys., Inc. v. Kent State Univ.*, 212 F.3d 1272, 1282 (Fed.Cir.2000) ("Incorporation by reference provides a method for integrating material from various documents into a host document—a patent or printed publication in an anticipation determination—by citing such material in a manner that makes clear that the material is effectively part of the host document as if it were explicitly contained therein.").

Rembrandt Wireless
Ex. 2012
Apple Inc. v. Rembrandt Wireless Technologies, LP, IPR2020-00033
Page 848

early as October 1996. Harris 4064.4 has not been previously cited to or considered by the Patent Office in connection with the '228 patent.

Harris 4064.4, the entirety of which is incorporated by reference into Snell, is a publication from Harris Corporation that describes features and operation of the HSP3824 baseband processor, part of the PRISM chipset disclosed in Snell. Harris Corporation was the assignee of Snell at issuance and developed and manufactured the PRISM chipset. Snell at 1:47-50. Harris 4064.4 discloses that the HSP3824 baseband processor can transmit using either DPBSK or DQPSK modulation. Harris 4064.4 at 14 ("The preamble and header are always transmitted as *DBPSK* waveforms while the data packets can be configured to be *either DBPSK or DQPSK*."); *id.* ("The HSP3824 transmitter is designed as a Direct Sequence Spread Spectrum *DBPSK/DQPSK modulator*"); *id.* ("The modulator is capable of switching rate automatically in the case where the preamble and header information are DBPSK modulated, and the data is DQPSK modulated.").

Harris 4064.4 also discloses that the "Signal" field of the header indicates the type of modulation used for the data portion of the packet, and that the switching can be done on-the-fly. *Id. at* 15 ("Signal Field (8 Bits) - This field indicates whether the data packet that follows the header is modulated as DBPSK or DQPSK. In mode 3 the HSP3824 receiver looks at the signal field to determine whether it needs to switch from DBPSK demodulation into DQPSK demodulation at the end of the always DBPSK preamble and header fields."); *id.* at 16 ("In mode 3 *the signal field defines the modulation type of the data packet (DBPSK or DQPSK)* so the receiver does not need to be preprogrammed to anticipate one or the other. In this mode the device checks the Signal field for the data packet modulation and it switches to DQPSK if it is

defined as such in the signal field. Note that the preamble and header are always DBPSK [thus] the modulation definition applies only for the data packet."); *id.* at Fig. 10.

Accordingly, Harris 4064.4 teaches that the "Signal" sequence, which is modulated using DBPSK and occurs prior to the data portion of the packet, indicates whether the modulation type for the data portion will remain as DBPSK or will switch to DQPSK.

3. Overview of Harris AN9614 (Incorporated by Reference into Snell)

Harris AN9614 is prior art under at least § 102(e) together with Snell because it is incorporated by reference in its entirety into Snell (Snell at 5:2-7)[8], a U.S. Patent filed by another in the United States on March 17, 1997, which is prior to December 5, 1997, the earliest claimed priority date of the '228 patent. A copy of Harris AN9614 was submitted to the Patent Office in an Information Disclosure Statement dated March 17, 1997, in the original filing of U.S. Patent Application No. 08/819,846, from which Snell issued ("the '846 Snell Application"). The file wrapper of the '846 Snell Application includes a copy of Harris AN9614, Exhibit L at 80, 83-84, and a Form PTO-1449 dated March 17, 1997 cites Harris AN9614, *Id.* at 78. Harris AN9614 is a publication by Harris Corporation dated March 1996 with a 1996 copyright notice by Harris Corporation. Harris AN9614 at 1; Snell at cover (listing Harris AN9614 under "Other Publications"), 1:47-54, 4:65-5:7. Harris AN9614 describes the HSP3824 Direct Sequence (DSSS) baseband processor that was a part of the PRISM chipset developed, manufactured, and sold by Harris Corporation. Harris AN9614 at 1, 2; Snell at 1:47-63, 5:8-17, 5:31-33; Harris

[8] Snell expressly incorporates by reference "the entire disclosure" of Harris AN9614 (Snell at 5:2-7). *See Harari v. Lee*, 656 F.3d 1331, 1335-36 (Fed. Cir. 2011) ("the entire '579 application disclosure was incorporated by the broad and unequivocal language: 'The disclosures of the two applications are hereby incorporate[d] by reference.'"); *Advanced Display Sys., Inc. v. Kent State Univ.*, 212 F.3d 1272, 1282 (Fed.Cir.2000) ("Incorporation by reference provides a method for integrating material from various documents into a host document—a patent or printed publication in an anticipation determination—by citing such material in a manner that makes clear that the material is effectively part of the host document as if it were explicitly contained therein.").

Rembrandt Wireless
Ex. 2012
Apple Inc. v. Rembrandt Wireless Technologies, LP, IPR2020-00033
Page 850

4064.4 ("The Harris HSP3824 Direct Sequence (DSSS) baseband processor is part of the PRISM™ 2.4 GHz radio chipset…"; "Ordering Information… Part No. HSP 3824VI"). Harris AN9614 is also prior art under at least §§ 102(a) and (b) because it is a printed publication that was publicly available at least as early as March 1996. Harris AN9614 has not been previously cited to or considered by the Patent Office in connection with the '228 patent.

Harris AN9614, the entirety of which is incorporated by reference into Snell, is a publication from Harris Corporation that describes features and operation of the PRISM chipset disclosed in Snell. Harris Corporation was the assignee of Snell at issuance and developed and manufactured the PRISM chipset. Snell at 1:47-50. Harris AN9614 discloses that the PRISM chipset described in Snell can operate in a polled (master/slave) protocol:[9]

> [T]he controller can keep adequate time to operate either a polled or a time allocated scheme. In these modes, the radio is powered off most of the time and only awakens when communications is expected. This station would be awakened periodically to listen for a beacon transmission. The beacon serves to reset the timing and to alert the radio to traffic. If traffic is waiting, the radio is instructed when to listen and for how long. In a polled scheme, the remote radio can respond to the poll with its traffic if it has any. With these techniques, the average power consumption of the radio can be reduced by more than an order of magnitude while meeting all data transfer objectives.

Harris AN9614 at 3. This discloses that when the PRISM chipset described in Snell is configured to operate in a polled (master/slave) protocol, power consumption can beneficially be reduced by more than an order of magnitude.

4. Overview of Admitted Prior Art

The '228 patent describes a prior art multipoint network architecture using a master modem and at least two tribs, with the specification making clear that "tribs" are the same thing

[9] A polled protocol is a master/slave protocol, as confirmed by the '228 patent. '228 patent at 4:30-34. *See also* IPR2014-00892, Pap. 46 at 16 ("In [a polling] protocol, a centrally assigned master periodically sends a polling message to the slave nodes, giving them explicit permission to transmit on the network."); '228 Prosecution History at 352; IPR2014-00892, Ex.1323 (Goodman Declaration) ¶ 124.

as "slaves." '228 patent at 3:64-5:7, Figs. 1, 2. For example, in the "Description of the Illustrative Embodiments," the '228 patent discusses an "exemplary" multipoint communication protocol, asserting that in such a protocol the "master … permits transmission from a trib only when that trib has been selected." '228 patent at 4:28-33. In its "Summary," the '228 patent describes a "master/slave" relationship as being one where "communication from a slave to a master occurs in response to a communication from the master to the slave." '228 patent at 2:27-34. Thus, the '228 patent teaches that "tribs" and "slaves" are both controlled by a master, which demonstrates that in the '228 patent, tribs and slaves are the same thing, and the terms are used interchangeably.

Both the figures and the specification of the '228 patent admit that communications systems using master/slave relationships were known in the prior art. In particular, Figure 1, which shows a master transceiver 24 in communication with three tributary transceivers, *i.e.*, slaves, is labeled as "Prior Art." *See In re Nomiya*, 509 F.2d 566, 571 (CCPA 1975) (holding applicant's labeling of two figures in the application drawings as "prior art" to be an admission that what was pictured was prior art relative to applicant's improvement); MPEP § 2129. In addition, the specification of the '228 patent admits that multipoint communication systems utilizing a master and multiple slaves was known in the prior art. *Id.* at 3:64-4:1 ("With reference to FIG. 1, *a prior art multipoint communication system 22 is shown to comprise a master modem or transceiver 24, which communicates with a plurality of tributary modems (tribs) or transceivers* 26-26 over communication medium 28.") (emphasis added); *see Pharmastem Therapeutics, Inc. v. Viacell, Inc.*, 491 F.3d 1342, 1362 (Fed. Cir. 2007) ("Admissions in the specification regarding the prior art are binding on the patentee for purposes

of a later inquiry into obviousness."); *Constant v. Advanced Micro–Devices, Inc.*, 848 F.2d 1560, 1570 (Fed.Cir.1988); MPEP § 2129.

Patentee made further admissions during prosecution of one of the parent applications to the '228 patent. As will be discussed in more detail below, one of the parent applications to the '228 patent is Serial No. 09/205,205, which issued as U.S. Patent No. 6,614,838 ("the '838 Patent"). During prosecution of the '838 patent, an Office Action, mailed on June 28, 2001, required the Applicant to designate Figure 2 as prior art. Ex. J at 3. ("Figure 2 should be designated by a legend such as - prior art - because only that which is old is illustrated."). In a "First Amendment And Response" filed October 1, 2001, the Applicant made the amendment, thus admitting that the subject matter shown in Figure 2 was known in the prior art. Ex. K at 5, 9. The specification of the '228 patent describes the prior art shown in Figure 2 as follows:

> Referring now to FIG. 2, an exemplary multipoint communication session is illustrated through use of a ladder diagram. This system uses polled multipoint communication protocol. That is, *a master controls the initiation of its own transmission to the tribs and permits transmission from a trib only when that trib has been selected.*

'228 patent at 4:28-33 (emphasis added). Lest there be any doubt that polled multiport communications using masters and slaves are admitted prior art, the specification says that the operation of the prior art system of Fig. 1 is illustrated in Fig. 2. *Id.* at 3:33-34 ("FIG. 2 is a ladder diagram illustrating the operation of the multipoint communication system of FIG. 1.").

Patentee's admissions in the '228 patent and the prosecution history of its ancestor '205 application regarding the fact that master/slave communication systems are prior art are binding, and can be used when determining whether a claim is obvious. *Pharmastem Therapeutics, Inc. v. Viacell, Inc.*, 491 F.3d 1342, 1362 (Fed. Cir. 2007) ("Admissions in the specification regarding the prior art are binding on the patentee for purposes of a later inquiry into obviousness."); *Constant v. Advanced Micro–Devices, Inc.*, 848 F.2d 1560, 1570 (Fed.Cir.1988) (''A statement

in the patent that something is in the prior art is binding on the applicant and patentee for determinations of anticipation and obviousness.'').

The PTAB correctly found that "the '228 patent's disclosure of polled multipoint communications using masters and slaves, depicted in Figures 1 and 2 and described in column 3, line 64 through column 5, line 7, contains material that may be used as prior art against the patent under 35 U.S.C. § 103(a)." IPR2014-00892, Pap. 46 at 13; '228 Prosecution History at 349. *See also* IPR2014-00892, Pap. 46 at 13, 19; IPR2014-00893, Pap. 44 at 13, 19; IPR2014-00895, Pap. 44 at 13; IPR2014-00518, Pap. 47 at 13; IPR2014-00519, Pap. 49 at 5.

The prior art master/slave system depicted in Figures 1 and 2 and described in column 3, line 64 through column 5, line 7 ("Admitted Prior Art") includes "a master modem or transceiver 24, which communicates with a plurality of tributary modems (tribs) or transceivers 26-26 [(slave transceivers)] over communication medium 28." '228 patent at 3:64-4:1.

The master/slave system described in the Admitted Prior Art operates using a polled multipoint communication protocol. *Id.* at 4:30. In this protocol, "a master [transceiver] controls the initiation of its own transmission to the tribs and permits transmission from a trib [(*i.e.*, slave transceiver)] only when that trib has been selected." *Id.* at 4:31-33. The master transceiver selects a trib by "transmit[ting] a training sequence 34 that includes the address of the trib that the master seeks to communicate with. In this case, the training sequence 34 includes the address of trib 26a." *Id.* at 4:38-41. Further, "[b]ecause master transceiver 24 selected trib 26a for communication as part of training sequence 34, trib 26a is the only modem that will return a transmission. Thus, trib 26a transmits data 44 destined for master transceiver 24." *Id.* at 4:53-57.

The Admitted Prior Art describes that the master can poll another trib (*i.e.*, slave transceiver) for data as well:

Rembrandt Wireless
Ex. 2012
Apple Inc. v. Rembrandt Wireless Technologies, LP, IPR2020-00033
Page 854

> The foregoing procedure is repeated except master transceiver identifies trib 26b in training sequence 48. In this case, trib 26a ignores the training sequence 48 and the subsequent transmission of data 52 and trailing sequence 54 because it does not recognize its address in training sequence 48. Master transceiver 24 transmits data 52 to trib 26b followed by trailing sequence 54 . . . To send information back to master transceiver 24, trib 26b transmits training sequence 56 to establish a communication session. Master transceiver 24 is conditioned to expect data only from trib 26b because trib 26b was selected as part of training sequence 48. Trib 26b transmits data 58 to master transceiver 24 terminated by trailing sequence 62.

Id. at 4:59-5:7.

Accordingly, the Admitted Prior Art describes a prior art master/slave relationship in which a slave communication (*e.g.*, 44, 58) from a slave (*e.g.*, 26a, 26b) to a master (*e.g.*, 24) occurs in response to a master communication (*e.g.*, 34, 48) from the master (*e.g.*, 24) to the slave (*e.g.*, 26a, 26b).

5. Overview of Yamano

Yamano is prior art under at least § 102(e) because it is a U.S. Patent filed by another in the United States on May 9, 1997, which is prior to December 5, 1997, the earliest claimed priority date of the '228 patent. Yamano has not been previously cited to or considered by the Patent Office in connection with the '228 patent.

Yamano discloses transmitting a first message, including a preamble and main body, and that the preamble includes a destination address for an intended destination of the payload portion. Yamano at 19:63-64 ("Packet 700 includes a preamble 701 and a main body 702."); Yamano at 20:1-7 ("For example, preamble 701 can include information which identifies: . . . (2) packet source and destination addresses."). Yamano also discloses that the preamble precedes the main body (containing data), as shown in Figure 8:

Rembrandt Wireless
Ex. 2012
Apple Inc. v. Rembrandt Wireless Technologies, LP, IPR2020-00033
Page 855

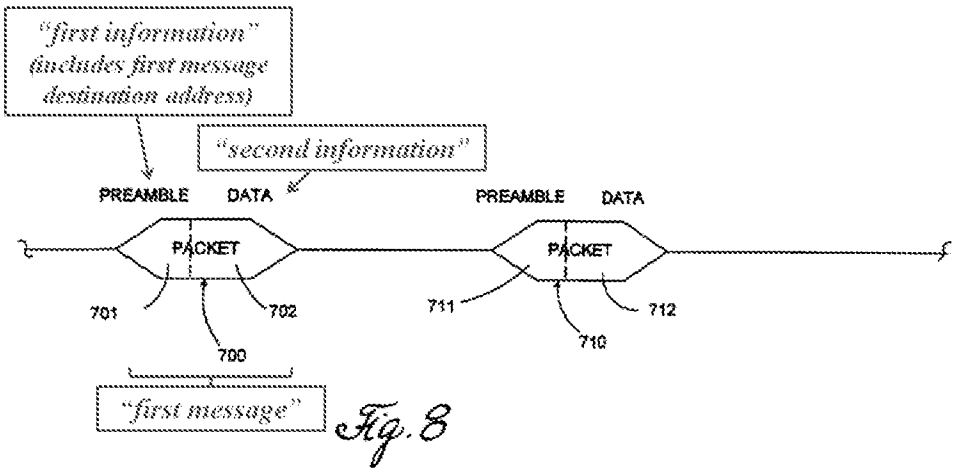

Yamano at Fig. 8 (annotated).

Further, Yamano discloses that including the destination address in the preamble is advantageous because the receiver can demodulate only those packets that are addressed to it, thereby reducing its processing requirements. *Id.* at 20:54-59.

6. Overview of Kamerman

Kamerman is prior art under at least § 102(a) because it is a printed publication that was publicly available at least as early as September 22-25, 1996, which is prior to December 5, 1997, the earliest claimed priority date of the '228 patent. Kamerman (attached as Exhibit I) is an article titled "Throughput Density Constraints for Wireless LANs Based on DSSS," authored by Ad Kamerman, published by IEEE at the 1996 IEEE 4th International Symposium on Spread Spectrum Techniques and Applications Proceedings held from September 22-25, 1996 in Mainz, Germany. Kamerman at 3. Kamerman also bears a copyright date of 1996 by the Institute of Electrical and Electronics Engineers, Inc. (Kamerman at 4) and was available to the public in the Library of Congress as early as January 16, 1997, as indicated by the Library of Congress date stamp of January 16, 1997 (Kamerman at 2). Kamerman has not been previously cited to or considered by the Patent Office in connection with the '228 patent.

Kamerman, like Snell, relates to DSSS transceivers designed according to the then-draft IEEE 802.11 standard, and discloses an automatic rate selection scheme for transmitting a first data packet where the data is modulated using a first modulation method (*e.g.*, BPSK at 1 mbps) and next transmitting a second data packet where the data is modulated using a second modulation method (*e.g.*, QPSK at 2 mbps) to adjust the data transfer rate based on channel conditions. *Id.* at 11 ("IEEE 802.11 DS specifies BPSK and QPSK, in addition there could be applied proprietary modes with M-PSK and QAM schemes that provide higher bit rates by encoding more bits per symbol. . . . An automatic rate selection scheme based on the reliability of the individual uplink and downlink could be applied. The basic rate adaptation scheme could be: after unacknowledged packet transmissions the rate falls back, *and after a number (e.g. 10) of successive correctly acknowledged packet transmissions the bit rate goes up.*"). Kamerman discloses that the data transfer rates can fall forward (*i.e.*, increase) with reliable connections and fall back (*i.e.*, revert) when there is strong cochannel interference. *Id.* at 12 ("The application of proprietary bit rates of 3 and 4 Mbps in addition to the basic 1 and 2 Mbps, can be combined with an automatic rate selection. This automatic rate selection gives *fall forward at reliable connections* and fall back at strong cochannel interference.").

Kamerman discloses adjusting the data transfer rates by switching between modulation types, including between a first modulation method, such as BPSK (which corresponds to a lower data transfer rate) and a second modulation method of a different type, such as QPSK (which corresponds to a higher data transfer rate). *Id.* at 11. Kamerman teaches that the automatic rate selection scheme can maximize the data transfer rate by transmitting the data using the first modulation method (which corresponds to a lower data transfer rate) during higher load conditions when a more robust signal is needed due to "mutilation of transmissions by

interference," and switching to transmitting the data using the second modulation method (which corresponds to the higher data transfer rate) when there is a reliable connection.

> At lower load in the neighbor cells the highest bit rate can be used more often. At higher load the transmissions from the accesspoint to stations at the outer part of the cells, will be done often at fallback rates due to mutilation of transmissions by interference. In practice the network load for LANs at nowadays client-server applications is very bursty, with sometimes transmission bursts over an individual links and low activity during the major part of the time. Therefore the higher bit rate can be used during the most of the time, and at high load in the neighbor cells (as will evoked by test applications) there will be switched to fall back rates in the outer part of the cell.

Id. at 11.

Accordingly, Kamerman discloses an automatic rate selection scheme for transmitting a first data packet where the data is modulated using a first modulation method (*e.g.*, BPSK at 1 mbps) when there is a high load in neighbor cells causing cochannel interference which requires a more robust signal, and, after a number of successive correctly acknowledged packet transmissions (for instance, where there is a low load in neighbor cells and a reliable connection) next transmitting a second data packet where the data is modulated using a second modulation method (*e.g.*, QPSK at 2 mbps) to maximize the data transfer rate. This automatic rate selection scheme is advantageous because it maximizes the data transfer rate when possible while preserving reliability during periods of strong cochannel interference.

C. SNQ-1: Unpatentability of Claim 21 Under 35 U.S.C. § 103 Over Snell, Yamano and Kamerman

Requesters submit that the combined teachings of Snell (submitted herewith as Exhibit D), Yamano (submitted herewith as Exhibit H) and Kamerman (submitted herewith as Exhibit I) raise a substantial new question of patentability with respect to claim 21 of the '228 patent, and that claim 21 of the '228 patent is unpatentable under 35 U.S.C. 103 as obvious over Snell in view of Yamano and Kamerman.

Rembrandt Wireless
Ex. 2012
Apple Inc. v. Rembrandt Wireless Technologies, LP, IPR2020-00033
Page 858

It was well-known in the art, as demonstrated by Yamano, that packets can be advantageously addressed for an intended destination. A POSITA would have been motivated and found it obvious and straightforward to use Yamano's teaching of including a destination address in the preamble portion of a data packet in implementing Snell's data packet comprising preamble, header, and MPDU data portions to advantageously specify which receiver the data is intended for and to beneficially reduce the processing requirements at the receiving device, as also taught by Yamano. Snell and Yamano are in the same field of art, with both relating to transmitting data packets over a network (*see, e.g.*, Snell at 1:55-58, 2:61-63, 2:66-3:3, 5:18-21, 6:48-63, Fig. 3; Yamano at 1:1-29, 19:54-20:33, Fig. 8), at varying rates (*see, e.g.*, Snell at 2:15-17, 6:52-59; Yamano at 19:54-56). Yamano expressly teaches that including a destination address in the preamble portion of the data packet, which precedes the data portion, will advantageously reduce processing requirements of receiving devices because the receiving device can filter out packets which it does not need to demodulate. Yamano at 20:54-59 ("When the preamble in a burst-mode packet *includes the destination address of the packet*, the receiver circuits can monitor the destination address of the packet, and in response, filter packets which do not need to be demodulated, thereby reducing the processing requirements of the receiver circuits."). In addition, Snell teaches structuring its data packet to include a preamble, header, and MPDU data portion (*see, e.g.*, Snell at 6:35-36, 6:64-66, 7:5-14, Fig. 3), and Yamano teaches structuring its data packet to also include a preamble and data portion, and to place the destination address in the preamble portion (Yamano at 19:63-20:7, Fig. 8). It would have been routine and straightforward for a POSITA to include a destination address in the preamble portion of a data packet, as taught by Yamano, in implementing Snell's system for transmitting data packets between transceivers, as Snell teaches that its data packet already includes a

preamble portion—and in combination, each element (Yamano's teaching of placing a destination address in the preamble and Snell's teaching of a system for communicating data packets modulated according to different modulation methods between transceivers) performs the same function as it would separately, yielding nothing more than predictable results. *KSR Int'l Co. v. Teleflex Inc.*, 550 U.S. 398, 417 (2007). A POSITA would have thus recognized that this combination (yielding the claimed limitation) would have worked as expected. For these reasons, a POSITA would have been motivated and found it obvious and straightforward to use Yamano's advantageous teachings of including a destination address in the preamble of a data packet in implementing Snell's communication system.

It was also well-known in the art, as demonstrated by Kamerman, to transmit a first data packet where the data is modulated using a first modulation method, such as BPSK (corresponding to a lower data transfer rate), and to next transmit a second data packet where the data is modulated using a second modulation method, such as QPSK (corresponding to a higher data transfer rate). A POSITA would have been motivated and found it obvious and straightforward to use Kamerman's teaching of transmitting a first data packet where the data is modulated using a first modulation method and next transmitting a second data packet where the data is modulated using a second modulation method in implementing Snell's system for communicating data packets modulated according to different modulation methods (implemented using the teachings of Yamano, as discussed above) to advantageously maximize the data transfer rate and adapt to changing channel conditions (as also taught by Kamerman). In particular, Kamerman expressly teaches that it is beneficial to transmit the data of a first data packet using a first modulation method corresponding to a lower data transfer rate (*e.g.*, BPSK modulation at 1 mbps) during higher load conditions when a more robust signal is needed due to

"mutilation of transmissions by interference," and to next transmit the data of a second data packet using a second modulation method corresponding to a higher data transfer rate (*e.g.*, QPSK modulation at 2 mbps) (*i.e.*, falling forward) to maximize the data transfer rate during lower load conditions when the connection is more reliable. *See* Kamerman at 6 ("Then there is looked to *automatic rate control* to keep the cochannel interference at a tolerable level."), 11 ("The basic rate adaptation scheme could be: after unacknowledged packet transmissions the rate falls back, and *after a number (e.g. 10) of successive correctly acknowledged packet transmissions the bit rate goes up.*"), 11 ("*At lower load in the neighbor cells the highest bit rate can be used more often.* At higher load the transmissions from the accesspoint to stations at the outer part of the cells, will be done at fallback rates due to mutilation of transmissions by interference. In practice the network load for LANs at nowadays client-server applications is very bursty, with sometimes transmission bursts over an individual links and low activity during the major part of the time. Therefore the higher bit rate can be used during the most of the time, and at high load in the neighbor cells … there will be switched to fall back rates in the outer part of the cell."), 12 ("This automatic rate selection gives fall forward at reliable connections and fall back at strong cochannel interference. Therefore it gives adaptation of the bit rate to the interference as it occurs in time depending on positions as load.").

Moreover, Snell and Kamerman are in the same field of art, with both relating to communications between transceivers that use BPSK and QPSK modulation methods to transfer data at different rates according to the draft IEEE 802.11 standard available at that time. *See, e.g.*, Snell at 1:47-63 ("The assignee of the present invention has developed and manufactured a set of integrated circuits for a WLAN under the mark PRISM 1 *which is compatible with the proposed IEEE 802.11 standard*…."), 5:31-33 ("The present invention provides an extension of

the PRISM 1 product from *1 Mbit/s BPSK and 2 Mbit/s QPSK…*"); Kamerman at 6 ("This paper considers the critical parameters for *wireless LANs that operate conform to the IEEE 802.11 DSSS (direct sequence spread spectrum) standard…*"), 11 ("IEEE 802.11 DS specifies bit rates of 1 and 2 Mbps.", 11 ("IEEE 802.11 DS specifies BPSK and QPSK…"). It would have been routine and straightforward for a POSITA to use Kamerman's teaching of transmitting a first data packet where the data is modulated using a first modulation method and next transmitting a second data packet where the data is modulated using a second modulation method in implementing Snell's system (implemented in light of Yamano) for communicating data packets modulated according to different modulation methods, as both Snell and Kamerman are directed to IEEE 802.11 systems utilizing BPSK and QPSK modulation corresponding, respectively, to a lower and higher data transfer rates—and in combination, each element (Kamerman's teaching of transmitting a first data packet where the data is modulated using a first modulation method and next transmitting a second data packet where the data is modulated using a second modulation method and Snell's system for communicating data packets modulated according to different modulation methods) performs the same function as it would separately, yielding nothing more than predictable results. *KSR*, 550 U.S. at 417. A POSITA would have thus recognized that this combination (yielding the claimed limitation) would have worked as expected. For these reasons, a POSITA would have been motivated and found it obvious and straightforward to use Kamerman's teaching of transmitting a first data packet where the data is modulated using a first modulation method and next transmitting a second data packet where the data is modulated using a second modulation method in implementing Snell's system (implemented in light of Yamano) for communicating data packets modulated according to different modulation methods.

Rembrandt Wireless
Ex. 2012
Apple Inc. v. Rembrandt Wireless Technologies, LP, IPR2020-00033
Page 862

The combination of Snell, Yamano, and Kamerman shows or renders obvious each and every element of the invention of claim 21. The relevant teachings of the combination of Snell, Yamano, and Kamerman were not considered during the prior examination of the '228 patent and a reasonable Examiner would consider these disclosures important in determining whether or not the claims are patentable.

Therefore, the combination of Snell, Yamano, and Kamerman raises a substantial new question of patentability with respect to claim 21 of the '228 patent (SNQ-1) and presents new technological teachings not previously considered in connection with prosecution of the '228 patent. MPEP § 2216. Accordingly, Requesters propose that claim 21 should be rejected under § 103 as rendered obvious by Snell, Yamano, and Kamerman.

The following claim chart demonstrates, in further detail, how each limitation is, at a minimum, obvious in light of Snell, Yamano, and Kamerman.

'228 Patent Claim 21	**SNQ-1: Combined Disclosure of Snell, Yamano, and Kamerman**
1.[preamble] A master communication device configured to communicate with one or more slave transceivers according to a master/slave relationship in which a slave communication from a slave device to the master communication device occurs in response to a master communication from the master communication device to the slave	**To the extent this preamble is considered a limitation of the claim, Snell discloses a master communication device configured to communicate with one or more slave transceivers according to a master/slave relationship in which a slave communication from a slave device to the master communication device occurs in response to a master communication from the master communication device to the slave device. *See, e.g.*, Snell at 1:34-46, 1:47-50, 1:55-57, 2:27-30, 4:42-47, 5:18-21; Harris AN9614 at 3.** For example, Snell discloses a "transceiver" that serves as an access point for communicating data with other transceivers connected to a wireless local area network (WLAN). "In a typical WLAN, *an access point provided by a transceiver*, that is, a combination transmitter and receiver, connects to the wired network from a fixed location. Accordingly, the access transceiver receives, buffers, and transmits data between the WLAN and the wired network. *A single access transceiver can support a small group of collocated users within a range of less than about one hundred to several hundred feet. The end users connect to the WLAN through transceivers* which are typically implemented as PC cards in a notebook computer, or ISA or PCI cards for

'228 Patent Claim 21	SNQ-1: Combined Disclosure of Snell, Yamano, and Kamerman
device, the master communication device comprising:	desktop computers. Of course the transceiver may be integrated with any device, such as a hand-held computer." Snell at 1:34-46. "Like the HSP3824 baseband processor, the high data rate baseband processor 40 of the invention contains all of the functions necessary for a full or half duplex packet baseband *transceiver*." Snell at 5:18-21. "The PRISM 1 chip set provides all the functions necessary for full or half duplex, direct sequence spread spectrum, *packet communications* at the 2.4 to 2.5 GHz ISM radio band." Snell at 1:55-57. *See also, e.g.,* Snell at 2:27-30 ("It is another object of the invention to provide *a spread spectrum transceiver* and associated method to permit operation at higher data rates and which may switch on-the-fly between different data rates and/or formats."); Snell at 1:47-50 ("The assignee of the present invention has developed and manufactured a set of integrated circuits for a WLAN under the mark PRISM 1 which is compatible with the proposed IEEE 802.11 standard."); Snell at 4:42-47 ("Referring to FIG. 1, a *wireless transceiver 30* in accordance with the invention is first described. The *transceiver 30 may be readily used for WLAN applications* in the 2.4 GHZ ISM band in accordance with the proposed IEEE 802.11 standard. Those of skill in the art will readily recognize other applications for the transceiver 30 as well."). Snell incorporates by reference Harris AN9614,[10] which discloses that the communications between transceivers can operate according to a polled (*i.e.*, master/slave) protocol, which is a master/slave communication system.[11] *See e.g.*, Harris AN9614 at 3. "[T]he controller can keep adequate time to operate either a polled or a time allocated scheme. In these modes, the radio is powered off most of the time and only awakens when communications is expected. This

[10] Snell expressly incorporates by reference "the entire disclosure" of Harris AN9614 (Snell at 5:2-7). *See Harari v. Lee*, 656 F.3d 1331, 1335-36 (Fed. Cir. 2011) ("the entire '579 application disclosure was incorporated by the broad and unequivocal language: 'The disclosures of the two applications are hereby incorporate[d] by reference.'"); *see also Advanced Display Sys., Inc. v. Kent State Univ.*, 212 F.3d 1272, 1282 (Fed.Cir.2000) ("material not explicitly contained in the single, prior art document may still be considered for purposes of anticipation if that material is incorporated by reference into the document.").

[11] A polled protocol is a master/slave protocol, as confirmed by the '228 patent. '228 patent at 4:30-34. *See also* IPR2014-00892, Pap. 46 at 16 ("In [a polling] protocol, a centrally assigned master periodically sends a polling message to the slave nodes, giving them explicit permission to transmit on the network."); '228 Prosecution History at 352; IPR2014-00892, Ex.1323 (Goodman Declaration) ¶ 124.

'228 Patent Claim 21	SNQ-1: Combined Disclosure of Snell, Yamano, and Kamerman
	station would be awakened periodically to listen for a beacon transmission. The beacon serves to reset the timing and to alert the radio to traffic. If traffic is waiting, the radio is instructed when to listen and for how long. In a polled scheme, the remote radio can respond to the poll with its traffic if it has any. With these techniques, the average power consumption of the radio can be reduced by more than an order of magnitude while meeting all data transfer objectives." Harris AN9614 at 3.
[1.A] a master transceiver configured to transmit a first message over a communication medium from the master transceiver to the one or more slave transceivers,	**Snell discloses a master transceiver configured to transmit a first message over a communication medium from the master transceiver to the one or more slave transceivers.** *See* Element 1.preamble.
[1.B] wherein the first message comprises: first information modulated according to a first modulation method, second information, including a payload portion, modulated according to the first modulation method, wherein the second information comprises data intended for one of the one or more slave transceivers and	**Snell discloses that the first message comprises first information modulated according to a first modulation method, second information, including a payload portion, modulated according to the first modulation method, wherein the second information comprises data intended for one of the one or more slave transceivers. *See, e.g.*, Snell at Abstract, 1:34-46, 1:47-50, 1:55-57, 1:58-61, 2:27-30, 2:56-59, 2:61-3:5, 4:42-47, 5:18-2, 6:35-36, 6:52-59, 6:64-66, 7:1-2, 7:5-14, 7:6-8, Figs. 2, 3; Harris AN9614 at 3; Harris 4064.4 at 14, 15, 16, Fig. 10.** For example, Snell discloses a "transceiver" that serves as an access point for communicating "data intended for one of the one or more [other] transceivers" connected to a wireless local area network (WLAN). *See* Element 1.preamble. "In a typical WLAN, *an access point provided by a transceiver*, that is, a combination transmitter and receiver, connects to the wired network from a fixed location. Accordingly, the access transceiver receives, buffers, and transmits data between the WLAN and the wired network. *A single access transceiver can support a small group of collocated users within a range of less than about one hundred to several hundred feet. The end users connect to the WLAN through transceivers* which are typically implemented as PC cards in a notebook computer, or ISA or PCI cards for desktop computers. Of course the transceiver may be integrated with any device, such as a hand-held computer." Snell at 1:34-46. "The PRISM 1 chip set provides all the functions necessary for full or half

'228 Patent Claim 21	SNQ-1: Combined Disclosure of Snell, Yamano, and Kamerman
	duplex, direct sequence spread spectrum, *packet communications* at the 2.4 to 2.5 GHz ISM radio band." Snell at 1:55-57. Snell further discloses transmitting a "first message" comprising "first information" (*e.g.*, PLCP preamble and PLCP header) "modulated according to a first modulation method" (*e.g.*, BPSK) and "second information, including a payload portion" (*e.g.*, MPDU data) "modulated according to the first modulation method" (*e.g.*, BPSK) (as depicted in Figure 3 below). Snell alternatively discloses modulating the "first information" (*e.g.*, PLCP preamble and PLCP header) and "second information, including a payload portion" (*e.g.*, MPDU data) according to <u>DBPSK</u>, which also is a "first modulation method." 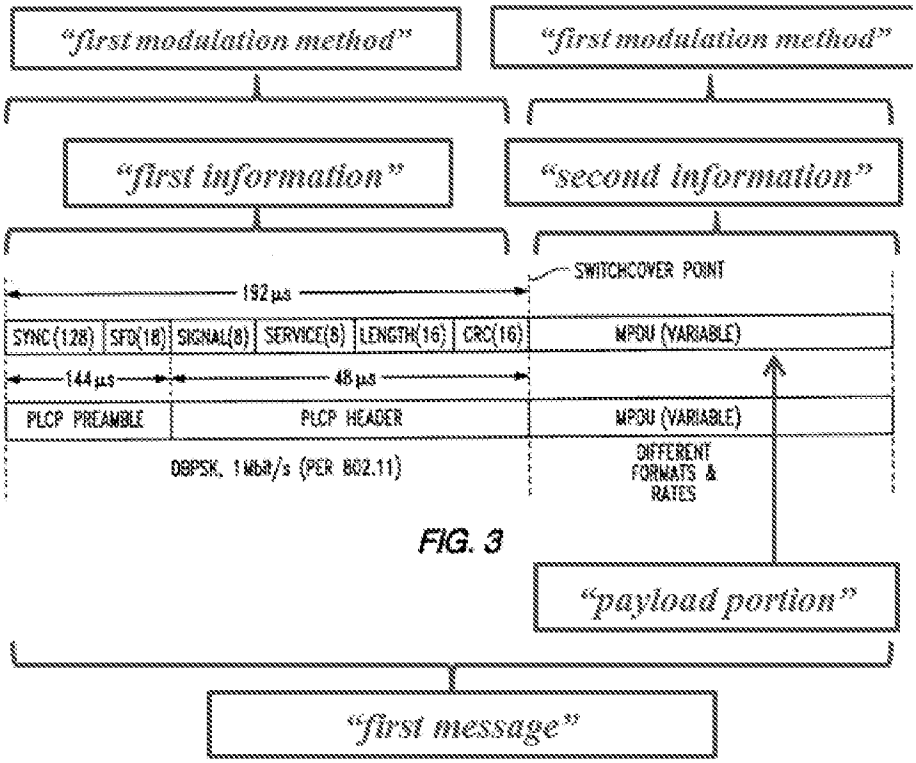 Snell at Fig. 3 (annotated). "The *header may always be BPSK*." Snell at 6:35-36. Snell discloses that the "SIGNAL" in the PLCP header indicates (*e.g.*, using "OAh") the modulation type (*e.g.*, BPSK) used for modulating the MPDU data portion. "Now relating to the PLCP header 91, the SIGNAL is:

'228 Patent Claim 21	SNQ-1: Combined Disclosure of Snell, Yamano, and Kamerman
	0Ah 1 Mbit/s BPSK, 14h 2 Mbit/S QPSK, 37h 5.5 Mbit/s BPSK, and 6Eh 11 Mbit/s QPSK. " Snell at 6:52-59. "SIGNAL is indicated by 2 control bits and then formatted as described." Snell at 7:1-2. "MPDU is serially provided by Interface 80 and is the variable data scrambled for normal operation. The reference phase for the first symbol of the MPDU is the output phase of the last symbol of the header for Diff Encoding. The last symbol of the header into the scrambler 51 must be followed by the first bit of the MPDU. The variable data may be modulated and demodulated in different formats than the header portion to thereby increase the data rate, and while a switchover as indicated by the switchover point in FIG. 3, occurs on-the-fly." Snell at 7:5-14. "The modulator preferably comprises means for *operating in one of a bi-phase PSK (BPSK) modulation mode at a first data rate defining a first format,* and a quadrature PSK (QPSK) mode at a second data rate defining a second format." Snell at 2:56-59. "In particular, the HSP3824 baseband processor manufactured by Harris Corporation *employs quadrature or bi-phase phase shift keying (QPSK or BPSK) modulation schemes*." Snell at 1:58-61. *See also, e.g.*, Snell at Abstract ("The modulator and demodulator are each preferably operable *in one of a bi-phase PSK (BPSK) mode* at a first data rate and *a quadrature PSK (QPSK) mode* at a second data rate. These formats may also be switched on-the-fly in the demodulator."), 2:15-17 ("Moreover, a WLAN application, for example, may require a change between *BPSK and QPSK* during operation, that is, on-the-fly."). "*The PLCP preamble and PLCP header are always* at 1 Mbit/s, *Diff encoded*, scrambled and spread with an 11 chip barker." Snell at 6:64-66. "The modulator may also preferably include header modulator means for modulating data packets to include *a header at a predetermined modulation and a third data rate defining a third format…. The third format is preferably differential BPSK*." Snell at 2:61-3:5. "The reference phase for the first symbol of the *MPDU* is the output

'228 Patent Claim 21	SNQ-1: Combined Disclosure of Snell, Yamano, and Kamerman
	phase of the last symbol of the header *for Diff Encoding*." Snell at 7:6-8. 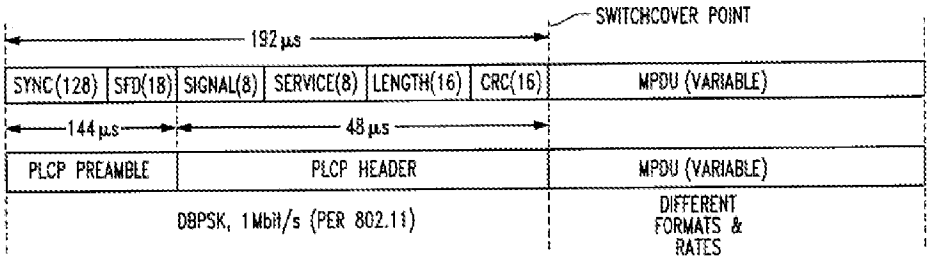 *FIG. 3* Snell at Fig. 3. 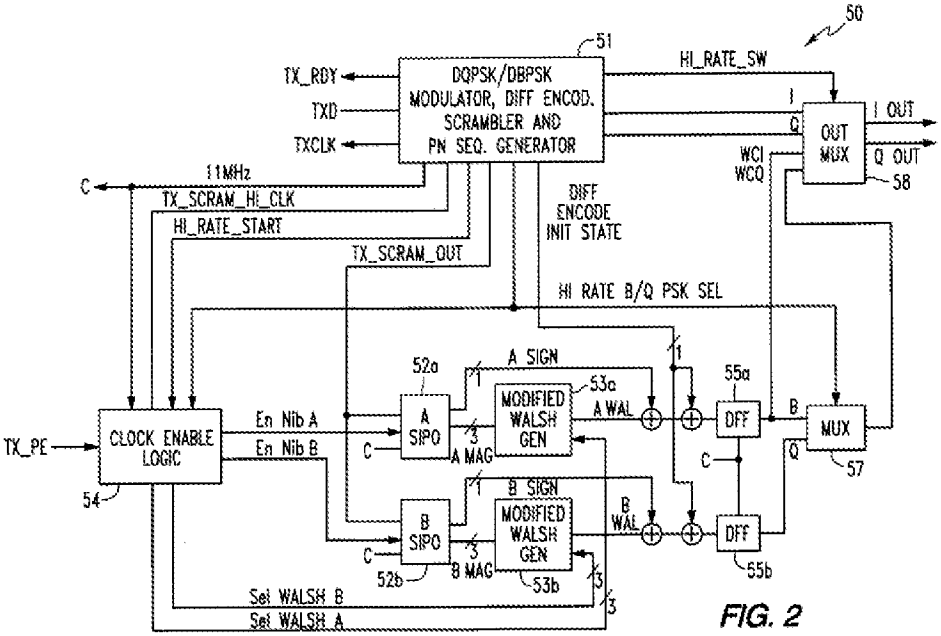 *FIG. 2* Snell at Fig. 2.

'228 Patent Claim 21	SNQ-1: Combined Disclosure of Snell, Yamano, and Kamerman
	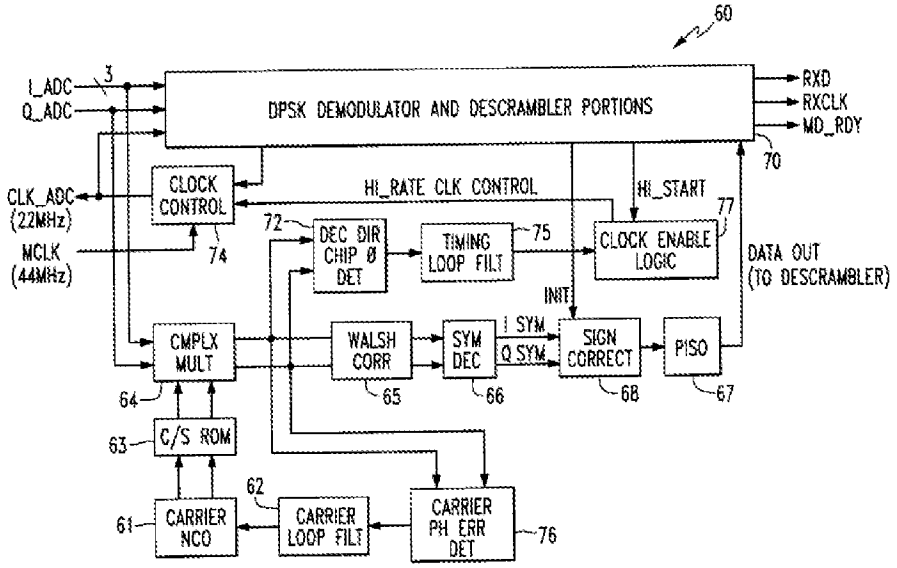 *FIG. 5* Snell at Fig. 5. Snell incorporates by reference Harris 4064.4,[12] which discloses: "*The preamble and header are always transmitted as DBPSK* waveforms while the *data packets can be configured to be either DBPSK* or DQPSK." Harris 4064.4 at 14. "The *preamble is always transmitted as a DBPSK* waveform with a programmable length of up to 256 symbols long." Harris 4064.4 at 15. "*Signal Field (8 Bits) - This field indicates whether the data packet that follows the header is modulated as DBPSK* or DQPSK. In mode 3 the HSP3824 receiver looks at the signal field to determine whether it needs to switch from DBPSK demodulation into DQPSK demodulation at the end of the always DBPSK preamble and header fields." Harris 4064.4 at 15. "Mode 3 - In this mode the preamble is programmable up to 256 bits (all

[12] Snell expressly incorporates by reference "the entire disclosure" of Harris 4064.4 (Snell at 5:8-17, 5:31-33). *See Harari v. Lee*, 656 F.3d 1331, 1335-36 (Fed. Cir. 2011) ("the entire '579 application disclosure was incorporated by the broad and unequivocal language: 'The disclosures of the two applications are hereby incorporate[d] by reference.'"); *see also Advanced Display Sys., Inc. v. Kent State Univ.*, 212 F.3d 1272, 1282 (Fed.Cir.2000) ("material not explicitly contained in the single, prior art document may still be considered for purposes of anticipation if that material is incorporated by reference into the document.").

'228 Patent Claim 21	SNQ-1: Combined Disclosure of Snell, Yamano, and Kamerman
	1's). The header in this mode is using all available fields. *In mode 3 the signal field defines the modulation type of the data packet (DBPSK* or DQPSK) so the receiver does not need to be preprogrammed to anticipate one or the other. In this mode the device checks the Signal field for the data packet modulation and it switches to DQPSK if it is defined as such in the signal field. *Note that the preamble and header are always DBPSK* the modulation definition applies only for the data packet." Harris 4064.4 at 16. *See also, e.g.*, Harris 4064.4 at 14 ("The HSP3824 transmitter is designed as a Direct Sequence Spread Spectrum DBPSK/DQPSK modulator."), Harris 4064.4 at 14 ("The modulator is capable of switching rate automatically in the case where the preamble and header information are DBPSK modulated, and the data is DQPSK modulated."), Harris 4064.4 at FIGURE 10.
[1.C] first message address information that is indicative of the one of the one or more slave transceivers being an intended destination of the second information; and	**Snell in view of Yamano discloses that the first message comprises first message address information that is indicative of the one of the one or more slave transceivers being an intended destination of the second information. *See, e.g.*, Snell at 6:35-36, 6:64-66, 7:5-10, Fig. 3; Harris 4064.4 at 14; Yamano at 19:63-64, 20:1-7, 20:54-59, Fig. 8.** For example, Snell discloses transmitting "a first message" including a PLCP preamble and PLCP header, and MPDU data, as shown in Figure 3 below. 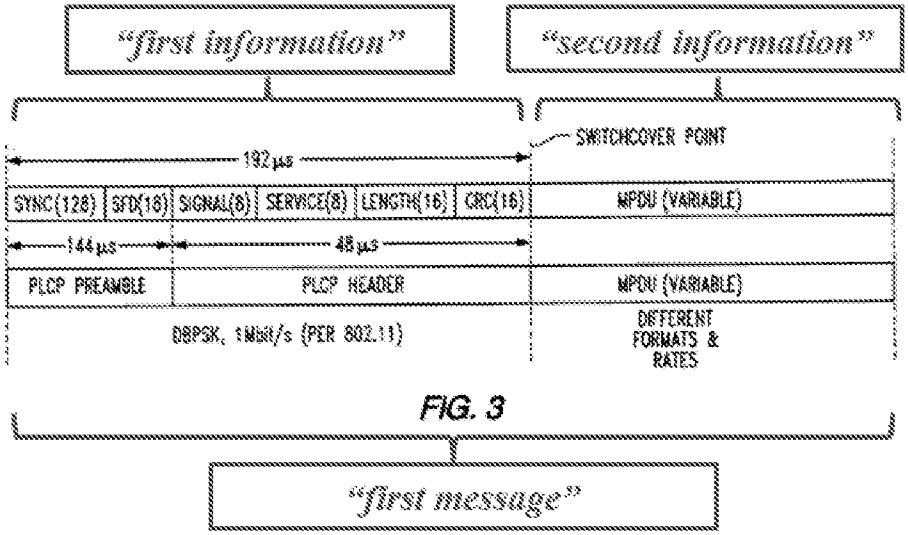 Snell at Fig. 3 (annotated).

'228 Patent Claim 21	SNQ-1: Combined Disclosure of Snell, Yamano, and Kamerman
	"The *header* may always be BPSK." Snell at 6:35-36. "The *PLCP preamble and PLCP header* are always at 1 Mbit/s, Diff encoded, scrambled and spread with an 11 chip barker." Snell at 6:64-66. "*MPDU* is serially provided by Interface 80 and *is the variable data* scrambled for normal operation. The reference phase for the first symbol of the MPDU is the output phase of the last symbol of the header for Diff Encoding. The last symbol of the header into the scrambler 51 must be followed by the first bit of the MPDU." Snell at 7:5-10. Snell incorporates by reference Harris 4064.4,[13] which discloses: "The *preamble and header* are always transmitted as DBPSK waveforms while the *data packets* can be configured to be either DBPSK or DQPSK." Harris 4064.4 at 14. **Yamano[14] discloses that the first message comprises first message address information that is indicative of the one of the one or more slave transceivers being an intended destination of the second information. *See, e.g.*, Yamano at 19:63-64, 20:1-7, 20:54-59, Fig. 8.** For example, Yamano discloses transmitting a "first message" (*e.g.*, data packet including a preamble and main body) that includes "first message address information that is indicative" (*e.g.*, "destination address" in the preamble) of the transceiver that is the "intended destination of the second information." "*Packet 700* includes a *preamble 701* and a *main body 702*." Yamano at 19:63-64. "For example, *preamble 701* can include information which identifies: (1) a version or type field for the preamble, (2) *packet source and destination addresses*, (3) the line code (i.e., the modem protocol being used), (4) the data rate, (5) error control parameters, (6) packet length and (7) a timing value for the expected reception slot of a subsequent packet." Yamano at 20:1-7.

[13] *See supra* n.12.

[14] As explained in Section III.C, a POSITA would have been motivated and found it obvious and straightforward to use Yamano's teaching of including a destination address in the preamble portion of a data packet in implementing Snell's communication system.

Rembrandt Wireless
Ex. 2012
Apple Inc. v. Rembrandt Wireless Technologies, LP, IPR2020-00033
Page 871

'228 Patent Claim 21	SNQ-1: Combined Disclosure of Snell, Yamano, and Kamerman
	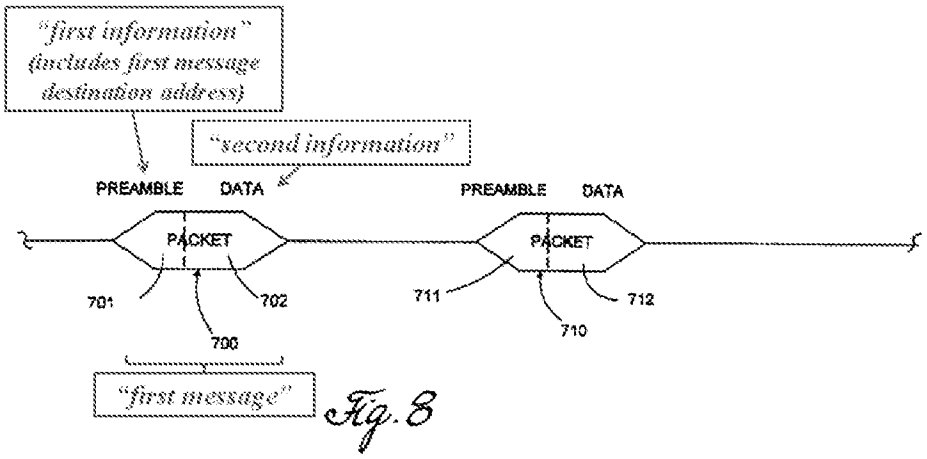 Yamano at Fig. 8 (annotated). "When the preamble in a burst-mode packet *includes the destination address of the packet*, the receiver circuits can monitor the destination address of the packet, and in response, filter packets which do not need to be demodulated, thereby reducing the processing requirements of the receiver circuits." Yamano at 20:54-59.
[1.D] said master transceiver configured to transmit a second message over the communication medium from the master transceiver to the one or more slave transceivers wherein the second message comprises: third information modulated according to the first modulation method, wherein the third information	**Snell in view of Kamerman discloses that the master transceiver is configured to transmit a second message over the communication medium from the master transceiver to the one or more slave transceivers wherein the second message comprises: third information modulated according to the first modulation method, wherein the third information comprises information that is indicative of an impending change in modulation to a second modulation method, and fourth information, including a payload portion, transmitted after transmission of the third information, the fourth information being modulated according to the second modulation method, the second modulation method being of a different type than the first modulation method, wherein the fourth information comprises data intended for a single slave transceiver of the one or more slave transceivers.**[15] ***See, e.g.*, Snell at 1:34-46, 1:47-50, 1:55-57, 2:27-30, 2:61-3:5, 4:42-47, 5:18-2, 6:35-36, 6:52-59, 6:64-66, 7:1-2, 7:5-14, Figs. 2, 3, 5; Harris AN9614 at 3; Harris 4064.4 at**

[15] In IPR2014-00892, the Board construed the limitation "different 'types' of modulation methods" in claim 1 to mean "modulation methods that are incompatible with each other" and found that "two modulation methods that are based on varying the same one of the frequency, amplitude, or phase of the carrier wave may be different 'types' of modulation methods." IPR2014-00892, Pap. 46 (Final Written Decision) at 13. The Board also found that the "DQPSK … modulation method[] [is] incompatible with DBPSK modulation." *Id.* at 19.

'228 Patent Claim 21	SNQ-1: Combined Disclosure of Snell, Yamano, and Kamerman
comprises information that is indicative of an impending change in modulation to a second modulation method, and fourth information, including a payload portion, transmitted after transmission of the third information, the fourth information being modulated according to the second modulation method, the second modulation method being of a different type than the first modulation method, wherein the fourth information comprises data intended for a single slave transceiver of the one or more slave	**14-16, Fig. 10; Kamerman at 6, 11, 12.** For example, Snell discloses a "transceiver" that serves as an access point for communicating "data intended for a [transceiver]" connected to a wireless local area network (WLAN). *See* Element 1.preamble. Snell also discloses that the transceiver transmits data packets to another transceiver, where the communication may switch on-the-fly between a "first modulation method" (*e.g.*, BPSK) and a "second modulation method" (*e.g.*, QPSK) that is "of a different type than the first modulation method." Snell thus teaches transmitting a "first message" and a "second message" as shown in Figure 3 below. 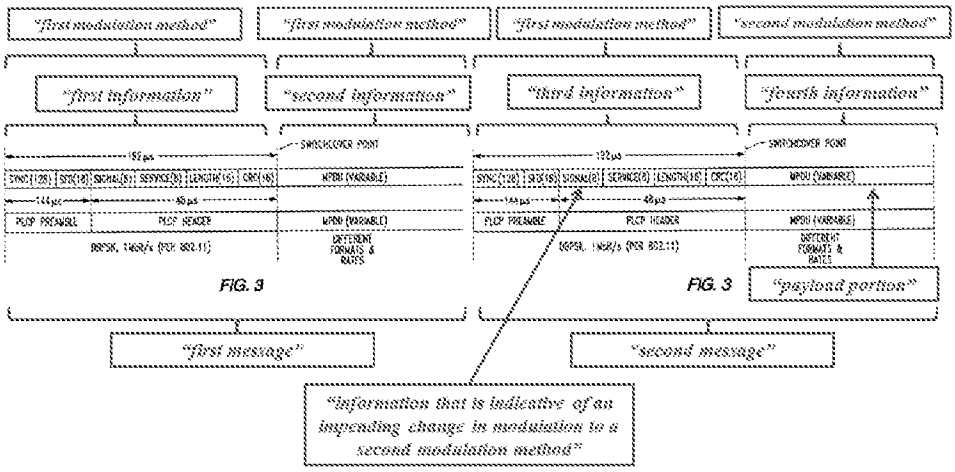 Snell at Fig. 3. (annotated).[16]

[16] As Snell teaches communicating multiple data packets with the ability to "switch on-the-fly between different data rates and/or formats." Based on this disclosure, a person of ordinary skill in the art would have understood that Snell teaches that a series of packets may be sent that switch from using a first modulation method to using a second modulation method for the payload portion of the data packet. For example, the "first message" in Snell comprises "first information" (*e.g.*, PLCP preamble and PLCP header) that is "modulated according to a first modulation method" (*e.g.*, BPSK) where the "first information" (*e.g.*, "SIGNAL" field in PLCP header) indicates (*e.g.*, using "0Ah") the modulation type (*e.g.*, BPSK) used for modulating "second information" (*e.g.*, MPDU data). In the "first message," the "SIGNAL" field in the PLCP header uses a code (*e.g.*, "0Ah") that indicates that the "second information" (*e.g.*, MPDU data) is modulated "according to the first modulation method" (*e.g.*, BPSK at 1 Mbit/s).

Snell's transceiver then transmits a "second message" comprising "third information" (*e.g.*, PLCP preamble and PLCP header) "modulated according to the first modulation method" (*e.g.*, BPSK) where the "third information comprises information" (*e.g.*, "SIGNAL" field in PLCP

'228 Patent Claim 21	SNQ-1: Combined Disclosure of Snell, Yamano, and Kamerman
transceivers, and	"The modulator may also preferably include header modulator means for modulating *data packets*." Snell at 2:61-63. "The PRISM 1 chip set provides all the functions necessary for full or half duplex, direct sequence spread spectrum, *packet communications* at the 2.4 to 2.5 GHz ISM radio band." Snell at 1:55-57. "It is another object of the invention to provide a spread spectrum transceiver and associated method to permit operation at higher data rates and *which may switch on-the-fly between different data rates and/or formats.*" Snell at 2:27-30. "*The variable data may be modulated and demodulated in different formats than the header portion* to thereby increase the data rate, and *while a switchover as indicated by the switchover point in FIG. 3, occurs on-the-fly*." Snell at 7:10-14. "The *header* may always be *BPSK*." Snell at 6:35-36. "Now relating to the *PLCP header* 91, *the SIGNAL* is: 0Ah — 1 Mbit/s BPSK, 14h — 2 Mbit/S QPSK, 37h — 5.5 Mbit/s BPSK, and 6Eh — 11 Mbit/s QPSK. " Snell at 6:52-59. "SIGNAL is indicated by 2 control bits and then formatted as described." Snell at 7:1-2. "*MPDU* is serially provided by Interface 80 and *is the variable data*

header) "that is indicative of an impending change in modulation" (*e.g.*, using "14h") "to a second modulation method" (*e.g.*, QPSK) used for modulating "fourth information." For example, in the "second message," the "SIGNAL" field in the PLCP header uses a code (*e.g.*, "14h") that indicates that the "fourth information" (*e.g.*, MPDU data) is modulated "according to the second modulation method" (*e.g.*, QPSK at 2 Mbit/s), wherein the "second modulation method" is of a "different type than the first modulation method." This "SIGNAL" is "indicative of an impending change" from the "first modulation method" to the "second modulation method" because it is indicating a change from, for example, QPSK modulation to BPSK modulation. In addition, transmitting the data using the "second modulation method"— QPSK—results in a data rate of 2 Mbit/s which is higher than transmitting the data using the "first modulation method"— BPSK at 1 Mbit/s.

'228 Patent Claim 21	SNQ-1: Combined Disclosure of Snell, Yamano, and Kamerman
	scrambled for normal operation. The reference phase for the first symbol of the MPDU is the output phase of the last symbol of the header for Diff Encoding. The last symbol of the header into the scrambler 51 must be followed by the first bit of the MPDU. *The variable data may be modulated and demodulated in different formats* than the header portion to thereby increase the data rate, and while a switchover as indicated by the switchover point in FIG. 3, occurs on-the-fly." Snell at 7:5-14. Snell describes that the "first modulation method" may be BPSK and the "second modulation method" may be QPSK, which is of a different "type" than the first modulation method, and alternatively describes that the "first modulation method" may be differential BPSK ("DBPSK") and that the "second modulation method" may be differential QPSK ("DQPSK"), which is also of a different "type" than the first modulation method. Thus, Snell alternatively describes modulating the "first information" (*e.g.*, PLCP preamble and PLCP header) according to a "first modulation method" (*e.g.*, <u>DBPSK</u>) and "second information" (*e.g.*, MPDU data) according to either a "first modulation method" (*e.g.*, <u>DBPSK</u>) or "second modulation method" (*e.g.*, <u>QBPSK</u>). "*The PLCP preamble and PLCP header are always* at 1 Mbit/s, *Diff encoded*, scrambled and spread with an 11 chip barker." Snell at 6:64-66. "The modulator may also preferably include header modulator means for modulating data packets to include *a header at a predetermined modulation and a third data rate defining a third format…. The third format is preferably differential BPSK*." Snell at 2:61-3:5. "The reference phase for the first symbol of the *MPDU* is the output phase of the last symbol of the header *for Diff Encoding*." Snell at 7:6-8. *See also, e.g.*, Snell at Figs. 2, 3, 5. Snell incorporates by reference Harris 4064.4,[17] which discloses: "*The preamble and header are always transmitted as DBPSK* waveforms while the *data packets can be configured to be either DBPSK or DQPSK*." Harris 4064.4 at 14. "The *preamble is always transmitted as a DBPSK* waveform with a programmable length of up to 256 symbols long." Harris 4064.4 at 15.

[17] *See supra* n.12.

'228 Patent Claim 21	SNQ-1: Combined Disclosure of Snell, Yamano, and Kamerman
	"*Signal Field (8 Bits) - This field indicates whether the data packet that follows the header is modulated as DBPSK or DQPSK.* In mode 3 the HSP3824 receiver looks at the signal field to determine whether it needs to switch from DBPSK demodulation into DQPSK demodulation at the end of the always DBPSK preamble and header fields." Harris 4064.4 at 15. "Mode 3 - In this mode the preamble is programmable up to 256 bits (all 1's). The header in this mode is using all available fields. *In mode 3 the signal field defines the modulation type of the data packet (DBPSK* or *DQPSK*) so the receiver does not need to be preprogrammed to anticipate one or the other. In this mode the device checks the Signal field for the data packet modulation and it switches to DQPSK if it is defined as such in the signal field. *Note that the preamble and header are always DBPSK* the modulation definition applies only for the data packet." Harris 4064.4 at 16. *See also, e.g.*, Harris 4064.4 at 14 ("The HSP3824 transmitter is designed as a Direct Sequence Spread Spectrum *DBPSK/DQPSK* modulator."), Harris 4064.4 at 14 ("The modulator is capable of switching rate automatically in the case where the preamble and header information are DBPSK modulated, and the data is *DQPSK* modulated."), Harris 4064.4 at FIGURE 10. **Kamerman[18] discloses transmitting a first message including second information modulated at a first modulation method and transmitting a second message including fourth information modulated at a second modulation method. *See, e.g.*, Kamerman at 6, 11, 12.** For example, Kamerman discloses an automatic rate selection scheme for falling forward from a "first modulation method" (*e.g.*, BPSK) corresponding to a lower data rate (*e.g.*, 1 Mbit/s) to a "second modulation method" (*e.g.*, QPSK) corresponding to a higher data rate (*e.g.*, 2 Mbit/s) after a number of successive correctly acknowledge packet transmissions, for instance, where there is a low load in neighbor cells and a reliable connection. "Then there is looked to *automatic rate control* to keep the cochannel

[18] As explained in Section III.C, a POSITA would have been motivated and found it obvious and straightforward to use Kamerman's teaching of transmitting a first data packet where the data is modulated using a first modulation method and next transmitting a second data packet where the data is modulated using a second modulation method in implementing Snell's system for communicating data packets modulated according to different modulation methods (as implemented using the teachings of Yamano).

'228 Patent Claim 21	SNQ-1: Combined Disclosure of Snell, Yamano, and Kamerman
	interference at a tolerable level." Kamerman at 6. "IEEE 802.11 DS specifies bit rates of 1 and 2 Mbps. The allowable SNR and CSIR values for reliable transmission of data packets are dependent on the bit rate." Kamerman at 11. "IEEE 802.11 DS specifies BPSK and QPSK, in addition there could be applied proprietary modes with M-PSK and QAM schemes that provide higher bit rates by encoding more bits per symbol. . . . An automatic rate selection scheme based on the reliability of the individual uplink and downlink could be applied. The basic rate adaptation scheme could be: after unacknowledged packet transmissions the rate falls back, and *after a number (e.g. 10) of successive correctly acknowledged packet transmissions the bit rate goes up*." Kamerman at 11. "*At lower load in the neighbor cells the highest bit rate can be used more often.* At higher load the transmissions from the accesspoint to stations at the outer part of the cells, will be done often at fallback rates due to mutilation of transmissions by interference. In practice the network load for LANs at nowadays client-server applications is very bursty, with sometimes transmission bursts over an individual links and low activity during the major part of the time. *Therefore the higher bit rate can be used during the most of the time, and at high load in the neighbor cells (as will evoked by test applications) there will be switched to fall back rates in the outer part of the cell.*" Kamerman at 11. "The application of proprietary bit rates of 3 and 4 Mbps in addition to the basic 1 and 2 Mbps, can be combined with an automatic rate selection. This automatic rate selection gives *fall forward at reliable connections* and fall back at strong cochannel interference." Kamerman at 12.
[1.E] second message address information that is indicative of the single slave transceiver being an intended destination of the fourth information; and	**Snell in view of Yamano discloses that the second message comprises second message address information that is indicative of the single slave transceiver being an intended destination of the fourth information. *See, e.g.*, Snell at 1:55-57, 2:61-63, 6:35-36, 6:64-66, 7:5-14, Fig. 3; Harris 4064.4 at 14; Yamano at 19:63-64, 20:1-7, 20:54-59, Fig. 8.** For example, Snell discloses transmitting a "second message" including a PLCP preamble and PLCP header, and MPDU data, as shown in Figure 3 below.

'228 Patent Claim 21	SNQ-1: Combined Disclosure of Snell, Yamano, and Kamerman
	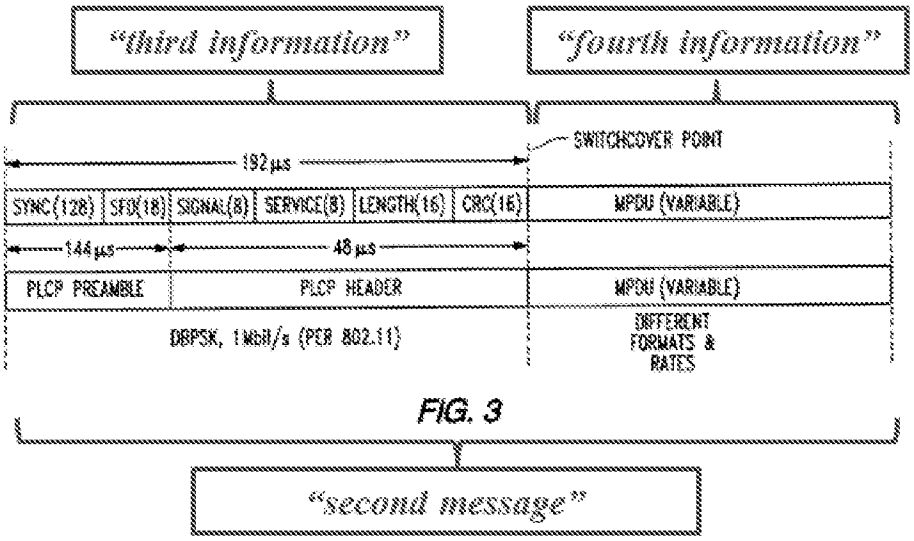 Snell at Fig. 3 (annotated). "The modulator may also preferably include header modulator means for modulating *data packets*." Snell at 2:61-63. "The PRISM 1 chip set provides all the functions necessary for full or half duplex, direct sequence spread spectrum, *packet communications* at the 2.4 to 2.5 GHz ISM radio band." Snell at 1:55-57. "The *header* may always be BPSK." Snell at 6:35-36. "The *PLCP preamble and PLCP header* are always at 1 Mbit/s, Diff encoded, scrambled and spread with an 11 chip barker." Snell at 6:64-66. "*MPDU* is serially provided by Interface 80 and *is the variable data* scrambled for normal operation. The reference phase for the first symbol of the MPDU is the output phase of the last symbol of the header for Diff Encoding. The last symbol of the header into the scrambler 51 must be followed by the first bit of the MPDU. *The variable data* may be modulated and demodulated in different formats than the header portion to thereby increase the data rate, and while a switchover as indicated by the switchover point in FIG. 3, occurs on-the-fly." Snell at 7:5-14. Snell incorporates by reference Harris 4064.4,[19] which discloses: "The *preamble and header* are always transmitted as DBPSK waveforms while the *data packets* can be configured to be either DBPSK or

[19] *See supra* n.12.

'228 Patent Claim 21	SNQ-1: Combined Disclosure of Snell, Yamano, and Kamerman
	DQPSK." Harris 4064.4 at 14. **Yamano[20] discloses that the second message comprises second message address information that is indicative of the single slave transceiver being an intended destination of the fourth information. *See, e.g.*, Yamano at 19:63-64, 20:1-7, 20:54-59, Fig. 8.** For example, Yamano discloses that a packet includes a preamble and main body, and that the preamble can include a destination address. "*Packet 700* includes a *preamble 701* and a *main body 702*." Yamano at 19:63-64. "For example, *preamble 701* can include information which identifies: (1) a version or type field for the preamble, (2) *packet source and destination addresses*, (3) the line code (i.e., the modem protocol being used), (4) the data rate, (5) error control parameters, (6) packet length and (7) a timing value for the expected reception slot of a subsequent packet." Yamano at 20:1-7 (emphasis added). 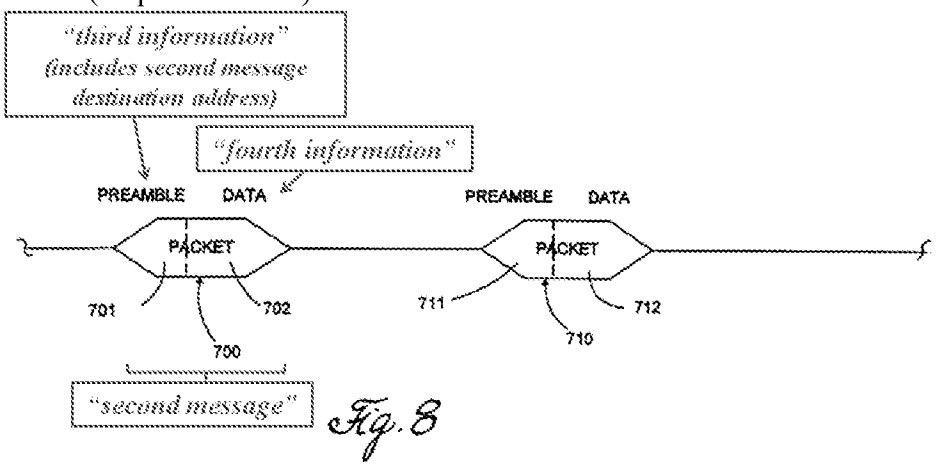 Yamano at Figure 8 (annotated). "When the preamble in a burst-mode packet *includes the destination address of the packet*, the receiver circuits can monitor the destination address of the packet, and in response, filter packets which do not need to be demodulated, thereby reducing the processing requirements of the receiver circuits." Yamano at 20:54-59.
[1.F] wherein the second modulation	**Snell discloses that the second modulation method results in a higher data rate than the first modulation method. *See, e.g.*, Snell at 5:31-33,**

[20] As explained in Section III.C, a POSITA would have been motivated and found it obvious and straightforward to use Yamano's teaching of including a destination address in the preamble portion of a data packet in implementing Snell's communication system.

'228 Patent Claim 21	SNQ-1: Combined Disclosure of Snell, Yamano, and Kamerman
method results in a higher data rate than the first modulation method.	**6:52-59, 6:64-66, 7:1-2, 7:5-14, Fig. 3; Harris 4064.4 at 16 (Table 7).** For example, Snell discloses that the second modulation method (*e.g.*, QPSK, or alternatively, DQPSK) results in a higher data rate (*e.g.*, 2 Mbit/s) than the first modulation method (*e.g.*, BPSK, or alternatively, DBPSK) which results in a data rate of 1 Mbit/s. "The present invention provides an extension of the PRISM 1 product from *1 Mbit/s BPSK and 2 Mbit/s QPSK* to 5.5 Mbit/s BPSK and 11 Mbit/s QPSK." Snell at 5:31-33 "*The PLCP preamble and PLCP header are* always at *1 Mbit/s*, Diff encoded, scrambled and spread with an 11 chip barker." Snell at 6:64-66. "Now relating to the PLCP header 91, the SIGNAL is: 0Ah — 1 Mbit/s BPSK, 14h — 2 Mbit/S QPSK, 37h — 5.5 Mbit/s BPSK, and 6Eh — 11 Mbit/s QPSK. " Snell at 6:52-59. "SIGNAL is indicated by 2 control bits and then formatted as described." Snell at 7:1-2. "MPDU is serially provided by Interface 80 and is the variable data scrambled for normal operation. The reference phase for the first symbol of the MPDU is the output phase of the last symbol of the header for Diff Encoding. The last symbol of the header into the scrambler 51 must be followed by the first bit of the MPDU. The variable data may be modulated and demodulated in different formats than the header portion to thereby increase the data rate, and while a switchover as indicated by the switchover point in FIG. 3, occurs on-the-fly." Snell at 7:5-14. *See also, e.g.*, Snell at Fig. 3; Harris 4064.4[21] at 16 (Table 7).
21. The master communication device as in claim 1, wherein the first information that is included in the first	**Snell in view of Yamano discloses that the first information that is included in the first message comprises the first message address data.** *See* claim 1, Element 1.C.

[21] *See supra* n.12.

'228 Patent Claim 21	SNQ-1: Combined Disclosure of Snell, Yamano, and Kamerman
message comprises the first message address data.	

D. SNQ-2: Unpatentability of Claim 21 Under 35 U.S.C. § 103 Over Snell, Harris 4064.4, Harris AN9614, Yamano and Kamerman

Requesters submit that the combined teachings of Snell (submitted herewith as Exhibit D), Harris 4064.4 (submitted herewith as Exhibit E), Harris AN9614 (submitted herewith as Exhibit F), Yamano (submitted herewith as Exhibit H), and Kamerman (submitted herewith as Exhibit I) raise a substantial new question of patentability with respect to claim 21 of the '228 patent, and that claim 21 of the '228 patent is unpatentable under 35 U.S.C. 103 as obvious over Snell in view of Harris 4064.4, Harris AN9614, Yamano, and Kamerman.[22]

A POSITA would have been motivated and found it obvious and straightforward to use Harris 4064.4's teachings of modulating the preamble and header portions of a data packet using DBPSK modulation and modulating the payload portion of the data packet using DBPSK or DQPSK modulation (as indicated by the SIGNAL field in the header portion) to advantageously provide for switching between DBPSK and DQPSK modulation types in implementing an IEEE 802.11 system (*see* Harris 4064.4 at 1, 3) such as disclosed in Snell. Harris 4064.4 is incorporated by reference into Snell (Snell at 5:13-17), both references are directed to the PRISM chipset and HSP 3824 baseband processor (Harris 4064.4 at 1; Snell at 1:47-63, 5:8-17, 5:31-33), and Harris 4064.4 is a publication of Harris Corporation, the same original assignee of

[22] Requesters submit that, as set forth in SNQ-1, the Harris 4064.4 and Harris AN9614 references are incorporated by reference into Snell and, therefore, are part of the express disclosure of Snell. To the extent, however, that it is deemed that Harris 4064.4 and Harris AN9614 should be treated as independent references from Snell, Requesters have set forth in SNQ-2 a detailed explanation as to why the Challenged Claim is invalid as obvious based on a combination of Snell, Harris 4064.4, Harris AN9614, Yamano and Kamerman.

Rembrandt Wireless
Ex. 2012
Apple Inc. v. Rembrandt Wireless Technologies, LP, IPR2020-00033
Page 881

Snell. It would have been routine and straightforward for a POSITA to use the teachings of Harris 4064.4 with the teachings of Snell, in light of the foregoing including Snell's express direction to apply the teachings of Harris 4064.4, and further because, in combination, each element (Harris 4064.4's teaching of modulating the preamble and header portions of a data packet using DBPSK modulation and modulating the payload portion of the data packet using DBPSK or DQPSK modulation and Snell's communication system for transmitting data packets modulated using different modulation methods) performs the same function as it would separately, yielding nothing more than predictable results. *KSR*, 550 U.S. at 417. A POSITA would have thus recognized that this combination (yielding the claimed limitation) would have worked as expected. For these reasons, a POSITA would have been motivated and found it obvious and straightforward to use Harris 4064.4's teachings in implementing Snell's communication system.

A POSITA would have additionally been motivated and found it obvious and straightforward to use Harris AN9614's teaching of a polled (master/slave) protocol in implementing the communication system taught by Snell (in light of Harris 4064.4). Harris AN9614 is incorporated by reference into Snell (Snell at 5:2-7), both references are directed to the PRISM chipset and HSP 3824 baseband processor (Harris AN9614 at 1, 2; Snell at 1:47-63, 5:8-17, 5:31-33), and Harris AN9614 is a publication of Harris Corporation, the same original assignee of Snell. Moreover, AN9614 expressly teaches that it is beneficial to use a polled (master/slave) protocol because "the average power consumption of the radio can be reduced by more than an order of magnitude while meeting all data transfer objectives." Harris AN9614 at 3. Polling (master/slave) enables this reduction in power consumption because "the system can be set at its sleep mode most of the time to achieve low power consumption. It only needs to operate

Rembrandt Wireless
Ex. 2012
Apple Inc. v. Rembrandt Wireless Technologies, LP, IPR2020-00033
Page 882

at full power consumption during the transmission of a packet or during the expected window for received packets." Harris AN9614 at 3. In addition to Snell's express suggestion to apply Harris AN9614's disclosures, a POSITA would have been motivated to use Harris AN9614's teaching of a polled (master/slave) protocol in implementing Snell's communication system (implemented in light of Harris 4064.4, *see supra*) because a polled (master/slave) communication system advantageously provides a simple protocol that has good determinacy (*e.g.*, a reduction in collisions). It would have been routine for a POSITA to use a polled (master/slave) protocol in implementing Snell's communication system (as implemented in light of Harris 4064.4), as master/slave communication systems were common and well-known in the art (*see* '228 patent at 3: 64 – 5:7), and thus implementing a polled (master/slave) protocol in Snell's transceiver (which serves as an access point to support communications with multiple other transceivers – Snell at 1:34-46) would involve nothing more than using common and known techniques to improve a similar system in the same way to yield predictable results. *KSR*, 550 U.S. at 416. A POSITA would have thus recognized that this combination (yielding the claimed limitation) would have worked as expected. For these reasons, a POSITA would have been motivated and found it obvious and straightforward to implement a polled (master/slave) protocol in implementing Snell's system (as implemented in light of Harris 4064.4).

It was well-known in the art, as demonstrated by Yamano, that packets can be advantageously addressed for an intended destination. A POSITA would have been motivated and found it obvious and straightforward to use Yamano's teaching of including a destination address in the preamble portion of a data packet in implementing Snell's data packet comprising preamble, header, and MPDU data portions (as implemented in light of Harris 4064.4 and Harris AN9614) to advantageously specify which receiver the data is intended for and to beneficially

reduce the processing requirements at the receiving device, as also taught by Yamano. Snell and Yamano are in the same field of art, with both relating to transmitting data packets over a network (*see, e.g.*, Snell at 1:55-58, 2:61-63, 2:66-3:3, 5:18-21, 6:48-63, Fig. 3; Yamano at 1:1-29, 19:54-20:33, Fig. 8), at varying rates (*see, e.g.*, Snell at 2:15-17, 6:52-59; Yamano at 19:54-56). Yamano expressly teaches that including a destination address in the preamble portion of the data packet, which precedes the data portion, will advantageously reduce processing requirements of receiving devices because the receiving device can filter out packets which it does not need to demodulate. Yamano at 20:54-59 ("When the preamble in a burst-mode packet *includes the destination address of the packet*, the receiver circuits can monitor the destination address of the packet, and in response, filter packets which do not need to be demodulated, thereby reducing the processing requirements of the receiver circuits."). In addition, Snell teaches structuring its data packet to include a preamble, header, and MPDU data portion (*see, e.g.*, Snell at 6:35-36, 6:64-66, 7:5-14, Fig. 3), and Yamano teaches structuring its data packet to also include a preamble and data portion, and to place the destination address in the preamble portion (Yamano at 19:63-20:7, Fig. 8). It would have been routine and straightforward for a POSITA to include a destination address in the preamble portion of a data packet, as taught by Yamano, in implementing Snell's system for transmitting data packets between transceivers, as Snell teaches that its data packet already includes a preamble portion—and in combination, each element (Yamano's teaching of placing a destination address in the preamble and Snell's teaching of a system for communicating data packets modulated according to different modulation methods between transceivers) performs the same function as it would separately, yielding nothing more than predictable results. *KSR Int'l Co. v. Teleflex Inc.*, 550 U.S. 398, 417 (2007). A POSITA would have thus recognized that this combination (yielding the claimed

Rembrandt Wireless
Ex. 2012
Apple Inc. v. Rembrandt Wireless Technologies, LP, IPR2020-00033
Page 884

limitation) would have worked as expected. For these reasons, a POSITA would have been motivated and found it obvious and straightforward to use Yamano's advantageous teachings of including a destination address in the preamble of a data packet in implementing Snell's communication system (as implemented in light of Harris 4064.4 and Harris AN9614).

It was also well-known in the art, as demonstrated by Kamerman, to transmit a first data packet where the data is modulated using a first modulation method, such as BPSK (corresponding to a lower data transfer rate), and to next transmit a second data packet where the data is modulated using a second modulation method, such as QPSK (corresponding to a higher data transfer rate). A POSITA would have been motivated and found it obvious and straightforward to use Kamerman's teaching of transmitting a first data packet where the data is modulated using a first modulation method and next transmitting a second data packet where the data is modulated using a second modulation method in implementing Snell's system for communicating data packets modulated according to different modulation methods (implemented using the teachings of Harris 4064.4, Harris AN9614, and Yamano, as discussed above) to advantageously maximize the data transfer rate and adapt to changing channel conditions (as also taught by Kamerman). In particular, Kamerman expressly teaches that it is beneficial to transmit the data of a first data packet using a first modulation method corresponding to a lower data transfer rate (*e.g.*, BPSK modulation at 1 mbps) during higher load conditions when a more robust signal is needed due to "mutilation of transmissions by interference," and to next transmit the data of a second data packet using a second modulation method corresponding to a higher data transfer rate (*e.g.*, QPSK modulation at 2 mbps) (*i.e.*, falling forward) to maximize the data transfer rate during lower load conditions when the connection is more reliable. *See* Kamerman at 6 ("Then there is looked to *automatic rate control*

to keep the cochannel interference at a tolerable level."), 11 ("The basic rate adaptation scheme could be: after unacknowledged packet transmissions the rate falls back, and *after a number (e.g. 10) of successive correctly acknowledged packet transmissions the bit rate goes up.*"), 11 ("*At lower load in the neighbor cells the highest bit rate can be used more often.* At higher load the transmissions from the accesspoint to stations at the outer part of the cells, will be done at fallback rates due to mutilation of transmissions by interference. In practice the network load for LANs at nowadays client-server applications is very bursty, with sometimes transmission bursts over an individual links and low activity during the major part of the time. Therefore the higher bit rate can be used during the most of the time, and at high load in the neighbor cells … there will be switched to fall back rates in the outer part of the cell."), 12 ("This automatic rate selection gives fall forward at reliable connections and fall back at strong cochannel interference. Therefore it gives adaptation of the bit rate to the interference as it occurs in time depending on positions as load.").

Moreover, Snell and Kamerman are in the same field of art, with both relating to communications between transceivers that use BPSK and QPSK modulation methods to transfer data at different rates according to the draft IEEE 802.11 standard available at that time. *See, e.g.*, Snell at 1:47-63 ("The assignee of the present invention has developed and manufactured a set of integrated circuits for a WLAN under the mark PRISM 1 *which is compatible with the proposed IEEE 802.11 standard*…."), 5:31-33 ("The present invention provides an extension of the PRISM 1 product from *1 Mbit/s BPSK and 2 Mbit/s QPSK*…"); Kamerman at 6 ("This paper considers the critical parameters for *wireless LANs that operate conform to the IEEE 802.11 DSSS (direct sequence spread spectrum) standard*..."), 11 ("IEEE 802.11 DS specifies bit rates of 1 and 2 Mbps.", 11 ("IEEE 802.11 DS specifies BPSK and QPSK…"). It would have been

routine and straightforward for a POSITA to use Kamerman's teaching of transmitting a first data packet where the data is modulated using a first modulation method and next transmitting a second data packet where the data is modulated using a second modulation method in implementing Snell's system (implemented in light of Harris 4064.4, Harris AN9614, and Yamano) for communicating data packets modulated according to different modulation methods, as both Snell and Kamerman are directed to IEEE 802.11 systems utilizing BPSK and QPSK modulation corresponding, respectively, to a lower and higher data transfer rates—and in combination, each element (Kamerman's teaching of transmitting a first data packet where the data is modulated using a first modulation method and next transmitting a second data packet where the data is modulated using a second modulation method and Snell's system for communicating data packets modulated according to different modulation methods) performs the same function as it would separately, yielding nothing more than predictable results. *KSR*, 550 U.S. at 417. A POSITA would have thus recognized that this combination (yielding the claimed limitation) would have worked as expected. For these reasons, a POSITA would have been motivated and found it obvious and straightforward to use Kamerman's teaching of transmitting a first data packet where the data is modulated using a first modulation method and next transmitting a second data packet where the data is modulated using a second modulation method in implementing Snell's system (implemented in light of Harris 4064.4, Harris AN9614, and Yamano) for communicating data packets modulated according to different modulation methods.

The combination of Snell, Harris 4064.4, Harris AN9614, Yamano, and Kamerman shows or renders obvious each and every element of the invention of claim 21. The relevant teachings of the combination of Snell, Harris 4064.4, Harris AN9614, Yamano, and Kamerman were not considered during the prior examination of the '228 patent and a reasonable Examiner

Rembrandt Wireless
Ex. 2012
Apple Inc. v. Rembrandt Wireless Technologies, LP, IPR2020-00033
Page 887

would consider these disclosures important in determining whether or not the claims are patentable.

Therefore, the combination of Snell, Harris 4064.4, Harris AN9614, Yamano, and Kamerman raises a substantial new question of patentability with respect to claim 21 of the '228 patent (SNQ-2) and presents new technological teachings not previously considered in connection with prosecution of the '228 patent. MPEP § 2216. Accordingly, Requesters propose that claim 21 should be rejected under § 103 as rendered obvious by Snell, in view of Harris 4064.4, Harris AN9614, Yamano, and Kamerman.

The following claim chart demonstrates, in further detail, how each limitation is, at a minimum, obvious in light of Snell, Harris 4064.4, Harris AN9614, Yamano, and Kamerman.

'228 Patent Claim 21	**SNQ-2: Combined Disclosure of Snell in View of Harris 4064.4, Harris AN9614, Yamano, and Kamerman**
1.[preamble] A master communication device configured to communicate with one or more slave transceivers according to a master/slave relationship in which a slave communication from a slave device to the master communication device occurs in response to a master communication from the master communication device to the slave device, the master communication device comprising:	**To the extent this preamble is considered a limitation of the claim, Snell in view of Harris AN9614 discloses a master communication device configured to communicate with one or more slave transceivers according to a master/slave relationship in which a slave communication from a slave device to the master communication device occurs in response to a master communication from the master communication device to the slave device. *See, e.g.*, Snell at 1:34-46, 1:47-50, 1:55-57, 2:27-30, 4:42-47, 5:18-21; Harris AN9614 at 3.** For example, Snell discloses a "transceiver" that serves as an access point for communicating data with other transceivers connected to a wireless local area network (WLAN). "In a typical WLAN, *an access point provided by a transceiver*, that is, a combination transmitter and receiver, connects to the wired network from a fixed location. Accordingly, the access transceiver receives, buffers, and transmits data between the WLAN and the wired network. *A single access transceiver can support a small group of collocated users within a range of less than about one hundred to several hundred feet. The end users connect to the WLAN through transceivers* which are typically implemented as PC cards in a notebook computer, or ISA or PCI cards for desktop computers. Of course the transceiver may be integrated with any device, such as a hand-held computer." Snell at 1:34-46.

'228 Patent Claim 21	SNQ-2: Combined Disclosure of Snell in View of Harris 4064.4, Harris AN9614, Yamano, and Kamerman
	"Like the HSP3824 baseband processor, the high data rate baseband processor 40 of the invention contains all of the functions necessary for a full or half duplex packet baseband *transceiver*." Snell at 5:18-21. "The PRISM 1 chip set provides all the functions necessary for full or half duplex, direct sequence spread spectrum, *packet communications* at the 2.4 to 2.5 GHz ISM radio band." Snell at 1:55-57. *See also, e.g.,* Snell at 2:27-30 ("It is another object of the invention to provide *a spread spectrum transceiver* and associated method to permit operation at higher data rates and which may switch on-the-fly between different data rates and/or formats."); Snell at 1:47-50 ("The assignee of the present invention has developed and manufactured a set of integrated circuits for a WLAN under the mark PRISM 1 which is compatible with the proposed IEEE 802.11 standard."); Snell at 4:42-47 ("Referring to FIG. 1, a *wireless transceiver 30* in accordance with the invention is first described. The *transceiver 30 may be readily used for WLAN applications* in the 2.4 GHZ ISM band in accordance with the proposed IEEE 802.11 standard. Those of skill in the art will readily recognize other applications for the transceiver 30 as well."). Snell incorporates by reference Harris AN9614,[23] which discloses that the communications between transceivers can operate according to a polled (*i.e.*, master/slave) protocol, which is a master/slave communication system.[24] *See e.g.*, Harris AN9614 at 3. "[T]he controller can keep adequate time to operate either a polled or a time allocated scheme. In these modes, the radio is powered off most of the time and only awakens when communications is expected. This station would be awakened periodically to listen for a beacon transmission. The beacon serves to reset the timing and to alert the radio to traffic. If traffic is waiting, the radio is instructed when to listen and for how long. In a polled scheme, the remote radio can respond to the poll with its traffic if it has any. With these techniques, the average power consumption of the radio can be reduced by more than an order of

[23] *See* n.22. As explained in Section III.D, a POSITA would have been motivated and found it obvious and straightforward to use Harris AN9614's teaching of a polled (master/slave) protocol in implementing the communication system taught by Snell (in light of Harris 4064.4).

[24] A polled protocol is a master/slave protocol, as confirmed by the '228 patent. '228 patent at 4:30-34. *See also* IPR2014-00892, Pap. 46 at 16 ("In [a polling] protocol, a centrally assigned master periodically sends a polling message to the slave nodes, giving them explicit permission to transmit on the network."); '228 Prosecution History at 352; IPR2014-00892, Ex.1323 (Goodman Declaration) ¶ 124.

'228 Patent Claim 21	SNQ-2: Combined Disclosure of Snell in View of Harris 4064.4, Harris AN9614, Yamano, and Kamerman
	magnitude while meeting all data transfer objectives." Harris AN9614 at 3.
[1.A] a master transceiver configured to transmit a first message over a communication medium from the master transceiver to the one or more slave transceivers,	**Snell in view of Harris AN9614 discloses a master transceiver configured to transmit a first message over a communication medium from the master transceiver to the one or more slave transceivers.** *See* Element 1.preamble.
[1.B] wherein the first message comprises: first information modulated according to a first modulation method, second information, including a payload portion, modulated according to the first modulation method, wherein the second information comprises data intended for one of the one or more slave transceivers and	**Snell in view of Harris 4064.4 discloses that the first message comprises first information modulated according to a first modulation method, second information, including a payload portion, modulated according to the first modulation method, wherein the second information comprises data intended for one of the one or more slave transceivers. *See, e.g.*, Snell at Abstract, 1:34-46, 1:47-50, 1:55-57, 1:58-61, 2:27-30, 2:56-59, 2:61-3:5, 4:42-47, 5:18-2, 6:35-36, 6:52-59, 6:64-66, 7:1-2, 7:5-14, 7:6-8, Figs. 2, 3; Harris AN9614 at 3; Harris 4064.4 at 14, 15, 16, Fig. 10.** For example, Snell discloses a "transceiver" that serves as an access point for communicating "data intended for one of the one or more [other] transceivers" connected to a wireless local area network (WLAN). *See* Element 1.preamble. "In a typical WLAN, *an access point provided by a transceiver*, that is, a combination transmitter and receiver, connects to the wired network from a fixed location. Accordingly, the access transceiver receives, buffers, and transmits data between the WLAN and the wired network. *A single access transceiver can support a small group of collocated users within a range of less than about one hundred to several hundred feet. The end users connect to the WLAN through transceivers* which are typically implemented as PC cards in a notebook computer, or ISA or PCI cards for desktop computers. Of course the transceiver may be integrated with any device, such as a hand-held computer." Snell at 1:34-46. "The PRISM 1 chip set provides all the functions necessary for full or half duplex, direct sequence spread spectrum, *packet communications* at the 2.4 to 2.5 GHz ISM radio band." Snell at 1:55-57. Snell further discloses transmitting a "first message" comprising "first

'228 Patent Claim 21	SNQ-2: Combined Disclosure of Snell in View of Harris 4064.4, Harris AN9614, Yamano, and Kamerman
	information" (*e.g.*, PLCP preamble and PLCP header) "modulated according to a first modulation method" (*e.g.*, BPSK) and "second information, including a payload portion" (*e.g.*, MPDU data) "modulated according to the first modulation method" (*e.g.*, BPSK) (as depicted in Figure 3 below). Snell alternatively discloses modulating the "first information" (*e.g.*, PLCP preamble and PLCP header) and "second information, including a payload portion" (*e.g.*, MPDU data) according to <u>DBPSK</u>, which also is a "first modulation method." 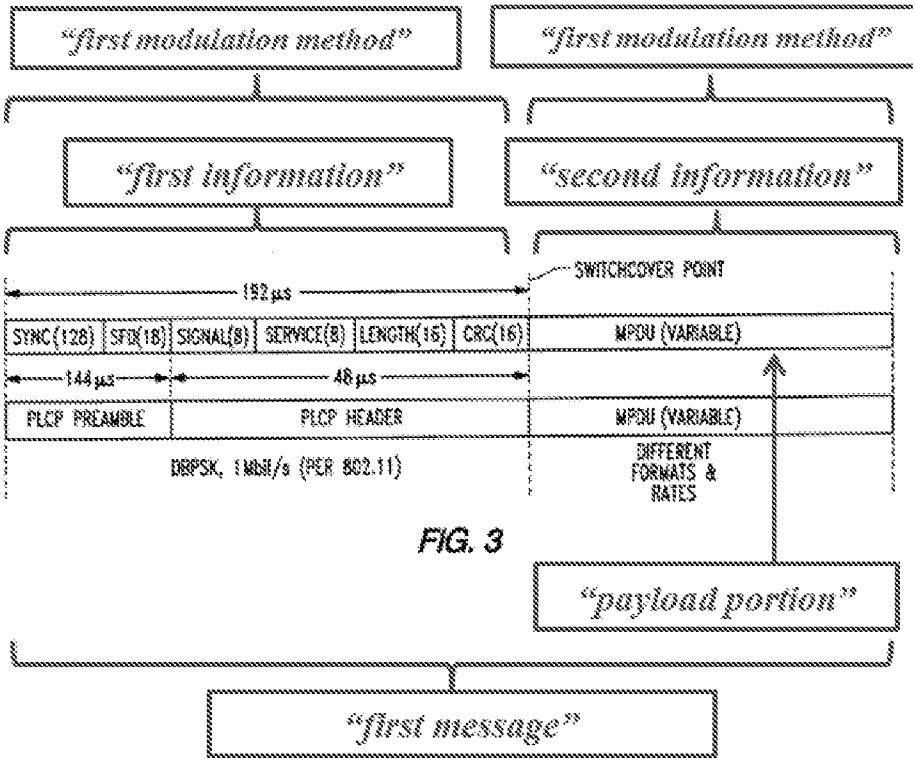 Snell at Fig. 3 (annotated). "The *header may always be BPSK*." Snell at 6:35-36. Snell discloses that the "SIGNAL" in the PLCP header indicates (*e.g.*, using "OAh") the modulation type (*e.g.*, BPSK) used for modulating the MPDU data portion. "Now relating to the PLCP header 91, the SIGNAL is:

'228 Patent Claim 21	SNQ-2: Combined Disclosure of Snell in View of Harris 4064.4, Harris AN9614, Yamano, and Kamerman
	0Ah 1 Mbit/s BPSK, 14h 2 Mbit/S QPSK, 37h 5.5 Mbit/s BPSK, and 6Eh 11 Mbit/s QPSK. " Snell at 6:52-59. "SIGNAL is indicated by 2 control bits and then formatted as described." Snell at 7:1-2. "MPDU is serially provided by Interface 80 and is the variable data scrambled for normal operation. The reference phase for the first symbol of the MPDU is the output phase of the last symbol of the header for Diff Encoding. The last symbol of the header into the scrambler 51 must be followed by the first bit of the MPDU. The variable data may be modulated and demodulated in different formats than the header portion to thereby increase the data rate, and while a switchover as indicated by the switchover point in FIG. 3, occurs on-the-fly." Snell at 7:5-14. "The modulator preferably comprises means for *operating in one of a bi-phase PSK (BPSK) modulation mode at a first data rate defining a first format,* and a quadrature PSK (QPSK) mode at a second data rate defining a second format." Snell at 2:56-59. "In particular, the HSP3824 baseband processor manufactured by Harris Corporation *employs quadrature or bi-phase phase shift keying (QPSK or BPSK) modulation schemes*." Snell at 1:58-61. *See also, e.g.*, Snell at Abstract ("The modulator and demodulator are each preferably operable *in one of a bi-phase PSK (BPSK) mode* at a first data rate and *a quadrature PSK (QPSK) mode* at a second data rate. These formats may also be switched on-the-fly in the demodulator."), 2:15-17 ("Moreover, a WLAN application, for example, may require a change between *BPSK and QPSK* during operation, that is, on-the-fly."). "*The PLCP preamble and PLCP header are always* at 1 Mbit/s, *Diff encoded*, scrambled and spread with an 11 chip barker." Snell at 6:64-66. "The modulator may also preferably include header modulator means for modulating data packets to include *a header at a predetermined modulation and a third data rate defining a third format…. The third format is preferably differential BPSK*." Snell at 2:61-3:5. "The reference phase for the first symbol of the *MPDU* is the output

'228 Patent Claim 21	SNQ-2: Combined Disclosure of Snell in View of Harris 4064.4, Harris AN9614, Yamano, and Kamerman
	phase of the last symbol of the header *for Diff Encoding*." Snell at 7:6-8. 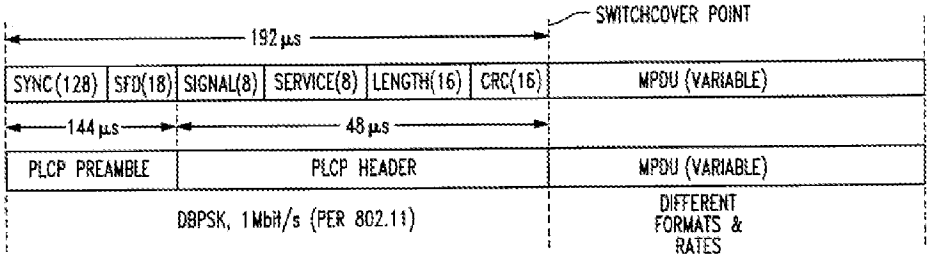 FIG. 3 Snell at Fig. 3. 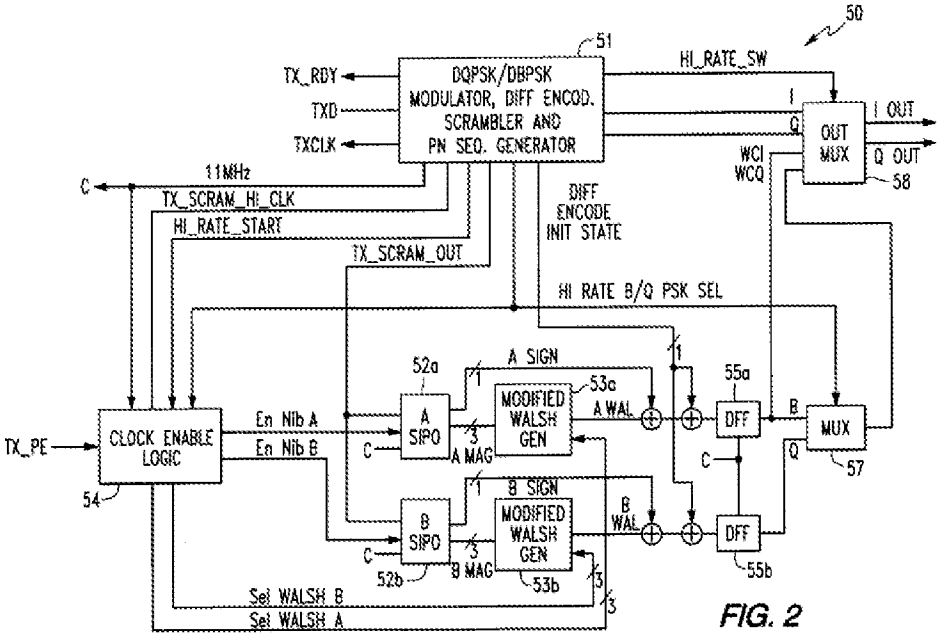 FIG. 2 Snell at Fig. 2.

'228 Patent Claim 21	SNQ-2: Combined Disclosure of Snell in View of Harris 4064.4, Harris AN9614, Yamano, and Kamerman
	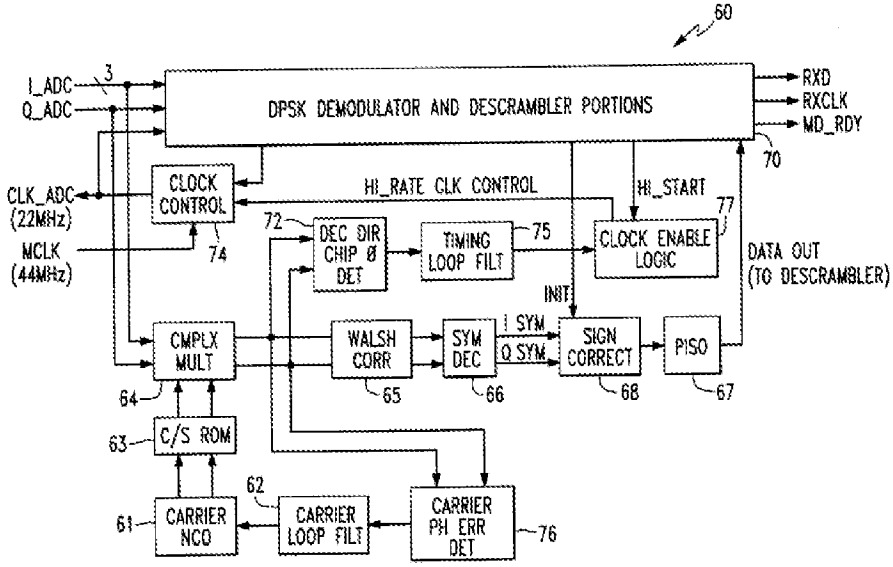 *FIG. 5* Snell at Fig. 5. Snell incorporates by reference Harris 4064.4,[25] which discloses: "*The preamble and header are always transmitted as DBPSK* waveforms while the *data packets can be configured to be either DBPSK* or DQPSK." Harris 4064.4 at 14. "The *preamble is always transmitted as a DBPSK* waveform with a programmable length of up to 256 symbols long." Harris 4064.4 at 15. "*Signal Field (8 Bits) - This field indicates whether the data packet that follows the header is modulated as DBPSK* or DQPSK. In mode 3 the HSP3824 receiver looks at the signal field to determine whether it needs to switch from DBPSK demodulation into DQPSK demodulation at the end of the always DBPSK preamble and header fields." Harris 4064.4 at 15.

[25] *See supra* n.22. As explained above in Section III.D, a POSITA would have been motivated and found it obvious and straightforward to use Harris 4064.4's teachings of modulating the preamble and header portions of a data packet using DBPSK modulation and modulating the payload portion of the data packet using DBPSK or DQPSK modulation (as indicated by the SIGNAL field in the header portion) to advantageously provide for switching between DBPSK and DQPSK modulation types in implementing an IEEE 802.11 system such as disclosed in Snell.

'228 Patent Claim 21	SNQ-2: Combined Disclosure of Snell in View of Harris 4064.4, Harris AN9614, Yamano, and Kamerman
	"Mode 3 - In this mode the preamble is programmable up to 256 bits (all 1's). The header in this mode is using all available fields. *In mode 3 the signal field defines the modulation type of the data packet (DBPSK* or DQPSK) so the receiver does not need to be preprogrammed to anticipate one or the other. In this mode the device checks the Signal field for the data packet modulation and it switches to DQPSK if it is defined as such in the signal field. *Note that the preamble and header are always DBPSK* the modulation definition applies only for the data packet." Harris 4064.4 at 16. *See also, e.g.*, Harris 4064.4 at 14 ("The HSP3824 transmitter is designed as a Direct Sequence Spread Spectrum DBPSK/DQPSK modulator."), Harris 4064.4 at 14 ("The modulator is capable of switching rate automatically in the case where the preamble and header information are DBPSK modulated, and the data is DQPSK modulated."), Harris 4064.4 at FIGURE 10.
[1.C] first message address information that is indicative of the one of the one or more slave transceivers being an intended destination of the second information; and	**Snell in view of Yamano discloses that the first message comprises first message address information that is indicative of the one of the one or more slave transceivers being an intended destination of the second information. *See, e.g.*, Snell at 6:35-36, 6:64-66, 7:5-10, Fig. 3; Harris 4064.4 at 14; Yamano at 19:63-64, 20:1-7, 20:54-59, Fig. 8.** For example, Snell discloses transmitting "a first message" including a PLCP preamble and PLCP header, and MPDU data, as shown in Figure 3 below. 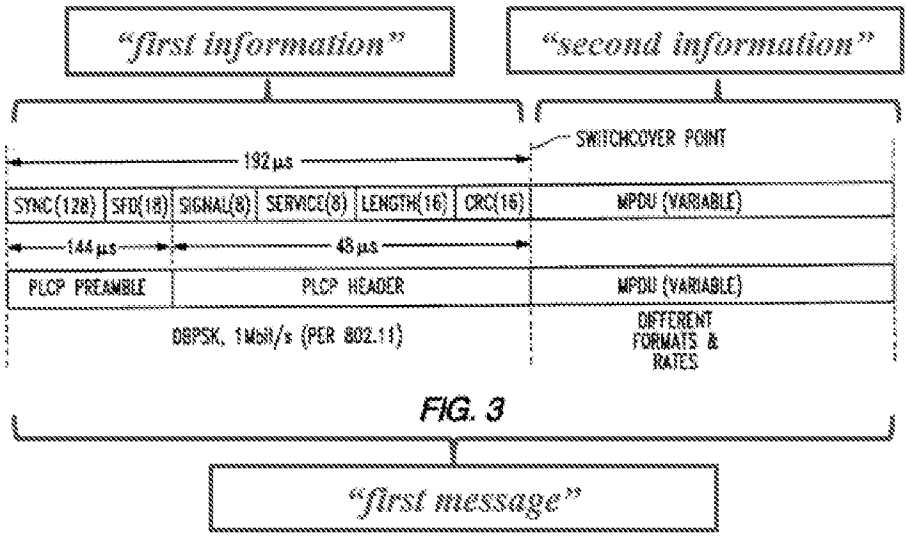 FIG. 3

'228 Patent Claim 21	SNQ-2: Combined Disclosure of Snell in View of Harris 4064.4, Harris AN9614, Yamano, and Kamerman
	Snell at Fig. 3 (annotated). "The *header* may always be BPSK." Snell at 6:35-36. "The *PLCP preamble and PLCP header* are always at 1 Mbit/s, Diff encoded, scrambled and spread with an 11 chip barker." Snell at 6:64-66. "*MPDU* is serially provided by Interface 80 and *is the variable data* scrambled for normal operation. The reference phase for the first symbol of the MPDU is the output phase of the last symbol of the header for Diff Encoding. The last symbol of the header into the scrambler 51 must be followed by the first bit of the MPDU." Snell at 7:5-10. Snell incorporates by reference Harris 4064.4,[26] which discloses: "The *preamble and header* are always transmitted as DBPSK waveforms while the *data packets* can be configured to be either DBPSK or DQPSK." Harris 4064.4 at 14. **Yamano[27] discloses that the first message comprises first message address information that is indicative of the one of the one or more slave transceivers being an intended destination of the second information. *See, e.g.*, Yamano at 19:63-64, 20:1-7, 20:54-59, Fig. 8.** For example, Yamano discloses transmitting a "first message" (*e.g.*, data packet including a preamble and main body) that includes "first message address information that is indicative" (*e.g.*, "destination address" in the preamble) of the transceiver that is the "intended destination of the second information." "*Packet 700* includes a *preamble 701* and a *main body 702*." Yamano at 19:63-64. "For example, *preamble 701* can include information which identifies: (1) a version or type field for the preamble, (2) *packet source and destination addresses*, (3) the line code (i.e., the modem protocol being used), (4) the data rate, (5) error control parameters, (6) packet length and (7) a timing value for the expected reception slot of a subsequent packet." Yamano at 20:1-7.

[26] *See supra* n.22.

[27] As explained in Section III.D, a POSITA would have been motivated and found it obvious and straightforward to use Yamano's teaching of including a destination address in the preamble portion of a data packet in implementing Snell's communication system (as implemented in light of Harris 4064.4 and Harris AN9614).

'228 Patent Claim 21	SNQ-2: Combined Disclosure of Snell in View of Harris 4064.4, Harris AN9614, Yamano, and Kamerman
	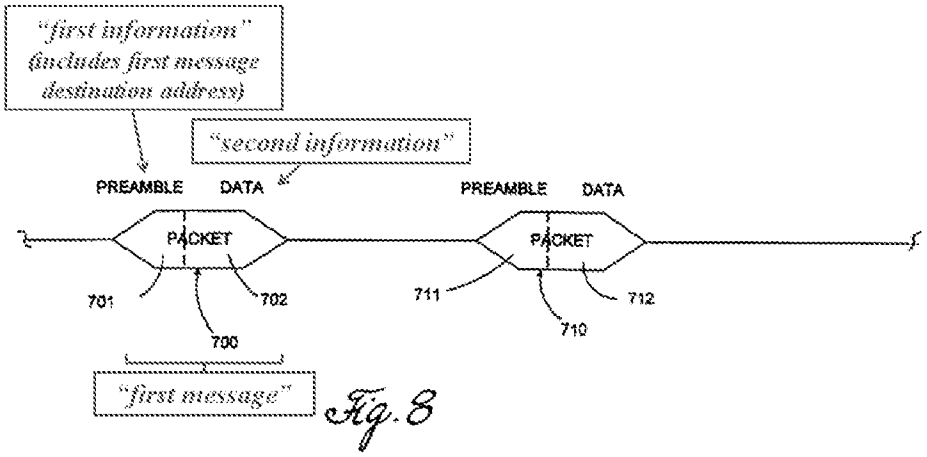 Yamano at Fig. 8 (annotated). "When the preamble in a burst-mode packet *includes the destination address of the packet*, the receiver circuits can monitor the destination address of the packet, and in response, filter packets which do not need to be demodulated, thereby reducing the processing requirements of the receiver circuits." Yamano at 20:54-59.
[1.D] said master transceiver configured to transmit a second message over the communication medium from the master transceiver to the one or more slave transceivers wherein the second message comprises: third information modulated according to the first modulation method, wherein the	**Snell in view of Kamerman discloses that the master transceiver is configured to transmit a second message over the communication medium from the master transceiver to the one or more slave transceivers wherein the second message comprises: third information modulated according to the first modulation method, wherein the third information comprises information that is indicative of an impending change in modulation to a second modulation method, and fourth information, including a payload portion, transmitted after transmission of the third information, the fourth information being modulated according to the second modulation method, the second modulation method being of a different type than the first modulation method, wherein the fourth information comprises data intended for a single slave transceiver of the one or more slave transceivers.[28]** ***See, e.g.*****, Snell at 1:34-46, 1:47-50, 1:55-57, 2:27-30, 2:61-3:5, 4:42-47, 5:18-2, 6:35-36, 6:52-59, 6:64-**

[28] In IPR2014-00892, the Board construed the limitation "different 'types' of modulation methods" in claim 1 to mean "modulation methods that are incompatible with each other" and found that "two modulation methods that are based on varying the same one of the frequency, amplitude, or phase of the carrier wave may be different 'types' of modulation methods." IPR2014-00892, Pap. 46 (Final Written Decision) at 13. The Board also found that the "DQPSK … modulation method[] [is] incompatible with DBPSK modulation." *Id.* at 19.

'228 Patent Claim 21	SNQ-2: Combined Disclosure of Snell in View of Harris 4064.4, Harris AN9614, Yamano, and Kamerman
third information comprises information that is indicative of an impending change in modulation to a second modulation method, and fourth information, including a payload portion, transmitted after transmission of the third information, the fourth information being modulated according to the second modulation method, the second modulation method being of a different type than the first modulation method, wherein the fourth information comprises data intended for a single slave transceiver of the one or more slave	**66, 7:1-2, 7:5-14, Figs. 2, 3, 5; Harris AN9614 at 3; Harris 4064.4 at 14-16, Fig. 10; Kamerman at 6, 11, 12.** For example, Snell discloses a "transceiver" that serves as an access point for communicating "data intended for a [transceiver]" connected to a wireless local area network (WLAN). *See* Element 1.preamble. Snell also discloses that the transceiver transmits data packets to another transceiver, where the communication may switch on-the-fly between a "first modulation method" (*e.g.*, BPSK) and a "second modulation method" (*e.g.*, QPSK) that is "of a different type than the first modulation method." Snell thus teaches transmitting a "first message" and a "second message" as shown in Figure 3 below. 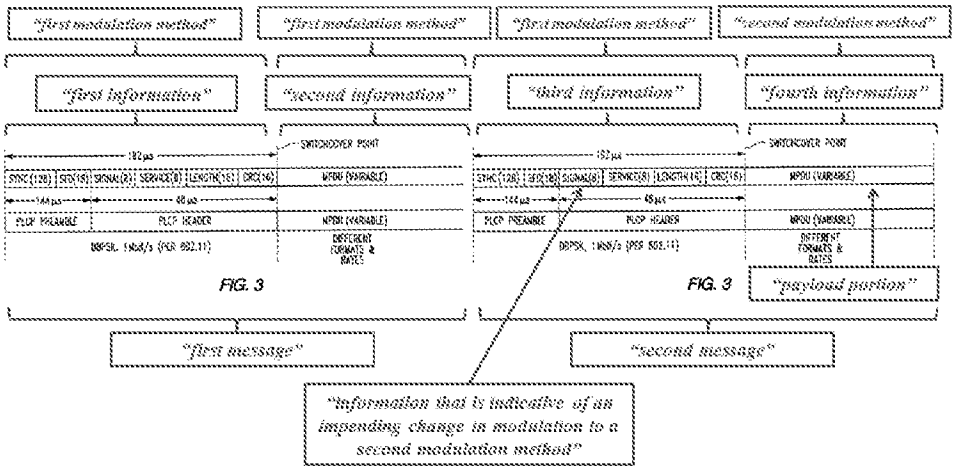 Snell at Fig. 3. (annotated).[29]

[29] As Snell teaches communicating multiple data packets with the ability to "switch on-the-fly between different data rates and/or formats." Based on this disclosure, a person of ordinary skill in the art would have understood that Snell teaches that a series of packets may be sent that switch from using a first modulation method to using a second modulation method for the payload portion of the data packet. For example, the "first message" in Snell comprises "first information" (*e.g.*, PLCP preamble and PLCP header) that is "modulated according to a first modulation method" (*e.g.*, BPSK) where the "first information" (*e.g.*, "SIGNAL" field in PLCP header) indicates (*e.g.*, using "0Ah") the modulation type (*e.g.*, BPSK) used for modulating "second information" (*e.g.*, MPDU data). In the "first message," the "SIGNAL" field in the PLCP header uses a code (*e.g.*, "0Ah") that indicates that the "second information" (*e.g.*, MPDU data) is modulated "according to the first modulation method" (*e.g.*, BPSK at 1 Mbit/s).

'228 Patent Claim 21	SNQ-2: Combined Disclosure of Snell in View of Harris 4064.4, Harris AN9614, Yamano, and Kamerman
transceivers, and	"The modulator may also preferably include header modulator means for modulating *data packets*." Snell at 2:61-63. "The PRISM 1 chip set provides all the functions necessary for full or half duplex, direct sequence spread spectrum, *packet communications* at the 2.4 to 2.5 GHz ISM radio band." Snell at 1:55-57. "It is another object of the invention to provide a spread spectrum transceiver and associated method to permit operation at higher data rates and *which may switch on-the-fly between different data rates and/or formats.*" Snell at 2:27-30. "*The variable data may be modulated and demodulated in different formats than the header portion* to thereby increase the data rate, and *while a switchover as indicated by the switchover point in FIG. 3, occurs on-the-fly*." Snell at 7:10-14. "The *header* may always be *BPSK*." Snell at 6:35-36. "Now relating to the *PLCP header* 91, *the SIGNAL* is: 0Ah — 1 Mbit/s BPSK, 14h — 2 Mbit/S QPSK, 37h — 5.5 Mbit/s BPSK, and 6Eh — 11 Mbit/s QPSK." Snell at 6:52-59.

Snell's transceiver then transmits a "second message" comprising "third information" (*e.g.*, PLCP preamble and PLCP header) "modulated according to the first modulation method" (*e.g.*, BPSK) where the "third information comprises information" (*e.g.*, "SIGNAL" field in PLCP header) "that is indicative of an impending change in modulation" (*e.g.*, using "14h") "to a second modulation method" (*e.g.*, QPSK) used for modulating "fourth information." For example, in the "second message," the "SIGNAL" field in the PLCP header uses a code (*e.g.*, "14h") that indicates that the "fourth information" (*e.g.*, MPDU data) is modulated "according to the second modulation method" (*e.g.*, QPSK at 2 Mbit/s), wherein the "second modulation method" is of a "different type than the first modulation method." This "SIGNAL" is "indicative of an impending change" from the "first modulation method" to the "second modulation method" because it is indicating a change from, for example, QPSK modulation to BPSK modulation. In addition, transmitting the data using the "second modulation method"— QPSK—results in a data rate of 2 Mbit/s which is higher than transmitting the data using the "first modulation method"— BPSK at 1 Mbit/s.

'228 Patent Claim 21	SNQ-2: Combined Disclosure of Snell in View of Harris 4064.4, Harris AN9614, Yamano, and Kamerman
	"SIGNAL is indicated by 2 control bits and then formatted as described." Snell at 7:1-2. "*MPDU* is serially provided by Interface 80 and *is the variable data* scrambled for normal operation. The reference phase for the first symbol of the MPDU is the output phase of the last symbol of the header for Diff Encoding. The last symbol of the header into the scrambler 51 must be followed by the first bit of the MPDU. *The variable data may be modulated and demodulated in different formats* than the header portion to thereby increase the data rate, and while a switchover as indicated by the switchover point in FIG. 3, occurs on-the-fly." Snell at 7:5-14. Snell describes that the "first modulation method" may be BPSK and the "second modulation method" may be QPSK, which is of a different "type" than the first modulation method, and alternatively describes that the "first modulation method" may be differential BPSK ("DBPSK") and that the "second modulation method" may be differential QPSK ("DQPSK"), which is also of a different "type" than the first modulation method. Thus, Snell alternatively describes modulating the "first information" (*e.g.*, PLCP preamble and PLCP header) according to a "first modulation method" (*e.g.*, DBPSK) and "second information" (*e.g.*, MPDU data) according to either a "first modulation method" (*e.g.*, DBPSK) or "second modulation method" (*e.g.*, QBPSK). "*The PLCP preamble and PLCP header are always* at 1 Mbit/s, *Diff encoded*, scrambled and spread with an 11 chip barker." Snell at 6:64-66. "The modulator may also preferably include header modulator means for modulating data packets to include *a header at a predetermined modulation and a third data rate defining a third format…. The third format is preferably differential BPSK*." Snell at 2:61-3:5. "The reference phase for the first symbol of the *MPDU* is the output phase of the last symbol of the header *for Diff Encoding*." Snell at 7:6-8. *See also, e.g.*, Snell at Figs. 2, 3, 5. Snell incorporates by reference Harris 4064.4,[30] which discloses: "*The preamble and header are always transmitted as DBPSK* waveforms while the *data packets can be configured to be either DBPSK or*

[30] *See supra* n.25.

'228 Patent Claim 21	SNQ-2: Combined Disclosure of Snell in View of Harris 4064.4, Harris AN9614, Yamano, and Kamerman
	DQPSK." Harris 4064.4 at 14. "The *preamble is always transmitted as a DBPSK* waveform with a programmable length of up to 256 symbols long." Harris 4064.4 at 15. "*Signal Field (8 Bits) - This field indicates whether the data packet that follows the header is modulated as DBPSK or DQPSK.* In mode 3 the HSP3824 receiver looks at the signal field to determine whether it needs to switch from DBPSK demodulation into DQPSK demodulation at the end of the always DBPSK preamble and header fields." Harris 4064.4 at 15. "Mode 3 - In this mode the preamble is programmable up to 256 bits (all 1's). The header in this mode is using all available fields. *In mode 3 the signal field defines the modulation type of the data packet (DBPSK* or *DQPSK*) so the receiver does not need to be preprogrammed to anticipate one or the other. In this mode the device checks the Signal field for the data packet modulation and it switches to DQPSK if it is defined as such in the signal field. *Note that the preamble and header are always DBPSK* the modulation definition applies only for the data packet." Harris 4064.4 at 16. *See also, e.g.*, Harris 4064.4 at 14 ("The HSP3824 transmitter is designed as a Direct Sequence Spread Spectrum *DBPSK/DQPSK* modulator."), Harris 4064.4 at 14 ("The modulator is capable of switching rate automatically in the case where the preamble and header information are DBPSK modulated, and the data is *DQPSK* modulated."), Harris 4064.4 at FIGURE 10. **Kamerman[31] discloses transmitting a first message including second information modulated at a first modulation method and transmitting a second message including fourth information modulated at a second modulation method. *See, e.g.*, Kamerman at 6, 11, 12.** For example, Kamerman discloses an automatic rate selection scheme for falling forward from a "first modulation method" (*e.g.*, BPSK) corresponding to a lower data rate (*e.g.*, 1 Mbit/s) to a "second

[31] As explained in Section III.D, a POSITA would have been motivated and found it obvious and straightforward to use Kamerman's teaching of transmitting a first data packet where the data is modulated using a first modulation method and next transmitting a second data packet where the data is modulated using a second modulation method in implementing Snell's system for communicating data packets modulated according to different modulation methods (as implemented using the teachings of Harris 4064.4, Harris AN9614, and Yamano).

'228 Patent Claim 21	SNQ-2: Combined Disclosure of Snell in View of Harris 4064.4, Harris AN9614, Yamano, and Kamerman
	modulation method" (*e.g.*, QPSK) corresponding to a higher data rate (*e.g.*, 2 Mbit/s) after a number of successive correctly acknowledge packet transmissions, for instance, where there is a low load in neighbor cells and a reliable connection. "Then there is looked to *automatic rate control* to keep the cochannel interference at a tolerable level." Kamerman at 6. "IEEE 802.11 DS specifies bit rates of 1 and 2 Mbps. The allowable SNR and CSIR values for reliable transmission of data packets are dependent on the bit rate." Kamerman at 11. "IEEE 802.11 DS specifies BPSK and QPSK, in addition there could be applied proprietary modes with M-PSK and QAM schemes that provide higher bit rates by encoding more bits per symbol. . . . An automatic rate selection scheme based on the reliability of the individual uplink and downlink could be applied. The basic rate adaptation scheme could be: after unacknowledged packet transmissions the rate falls back, and *after a number (e.g. 10) of successive correctly acknowledged packet transmissions the bit rate goes up*." Kamerman at 11. "*At lower load in the neighbor cells the highest bit rate can be used more often.* At higher load the transmissions from the accesspoint to stations at the outer part of the cells, will be done often at fallback rates due to mutilation of transmissions by interference. In practice the network load for LANs at nowadays client-server applications is very bursty, with sometimes transmission bursts over an individual links and low activity during the major part of the time. *Therefore the higher bit rate can be used during the most of the time, and at high load in the neighbor cells (as will evoked by test applications) there will be switched to fall back rates in the outer part of the cell.*" Kamerman at 11. "The application of proprietary bit rates of 3 and 4 Mbps in addition to the basic 1 and 2 Mbps, can be combined with an automatic rate selection. This automatic rate selection gives *fall forward at reliable connections* and fall back at strong cochannel interference." Kamerman at 12.
[1.E] second message address information that is indicative of the single slave transceiver being an intended destination of the fourth	**Snell in view of Yamano discloses that the second message comprises second message address information that is indicative of the single slave transceiver being an intended destination of the fourth information. *See, e.g.*, Snell at 1:55-57, 2:61-63, 6:35-36, 6:64-66, 7:5-14, Fig. 3; Harris 4064.4 at 14; Yamano at 19:63-64, 20:1-7, 20:54-59, Fig. 8.**

'228 Patent Claim 21	SNQ-2: Combined Disclosure of Snell in View of Harris 4064.4, Harris AN9614, Yamano, and Kamerman
information; and	For example, Snell discloses transmitting a "second message" including a PLCP preamble and PLCP header, and MPDU data, as shown in Figure 3 below. 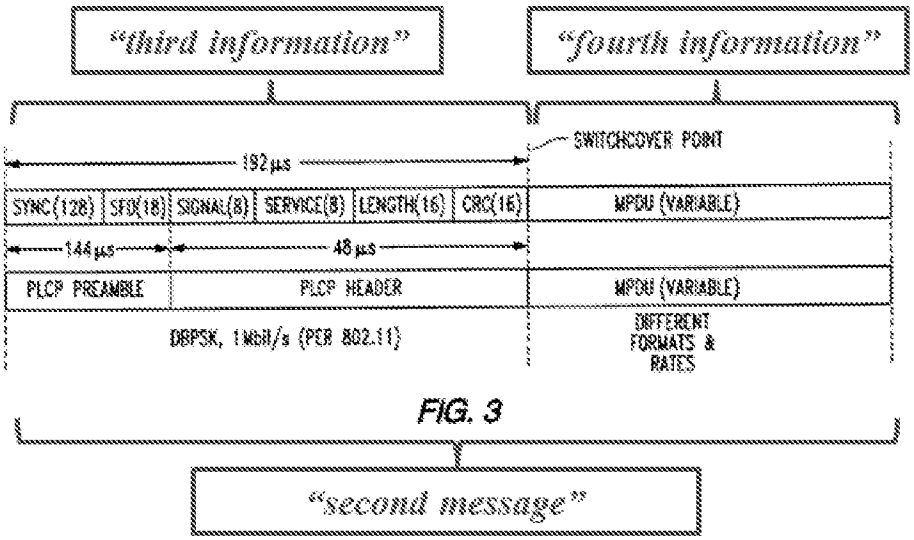 Snell at Fig. 3 (annotated). "The modulator may also preferably include header modulator means for modulating *data packets*." Snell at 2:61-63. "The PRISM 1 chip set provides all the functions necessary for full or half duplex, direct sequence spread spectrum, *packet communications* at the 2.4 to 2.5 GHz ISM radio band." Snell at 1:55-57. "The *header* may always be BPSK." Snell at 6:35-36. "The *PLCP preamble and PLCP header* are always at 1 Mbit/s, Diff encoded, scrambled and spread with an 11 chip barker." Snell at 6:64-66. "*MPDU* is serially provided by Interface 80 and *is the variable data* scrambled for normal operation. The reference phase for the first symbol of the MPDU is the output phase of the last symbol of the header for Diff Encoding. The last symbol of the header into the scrambler 51 must be followed by the first bit of the MPDU. *The variable data* may be modulated and demodulated in different formats than the header portion to thereby increase the data rate, and while a switchover as indicated by the switchover point in FIG. 3, occurs on-the-fly." Snell at 7:5-14.

'228 Patent Claim 21	SNQ-2: Combined Disclosure of Snell in View of Harris 4064.4, Harris AN9614, Yamano, and Kamerman
	Snell incorporates by reference Harris 4064.4,[32] which discloses: "The *preamble and header* are always transmitted as DBPSK waveforms while the *data packets* can be configured to be either DBPSK or DQPSK." Harris 4064.4 at 14. **Yamano[33] discloses that the second message comprises second message address information that is indicative of the single slave transceiver being an intended destination of the fourth information. *See, e.g.*, Yamano at 19:63-64, 20:1-7, 20:54-59, Fig. 8.** For example, Yamano discloses that a packet includes a preamble and main body, and that the preamble can include a destination address. "*Packet 700* includes a *preamble 701* and a *main body 702*." Yamano at 19:63-64. "For example, *preamble 701* can include information which identifies: (1) a version or type field for the preamble, (2) *packet source and destination addresses*, (3) the line code (i.e., the modem protocol being used), (4) the data rate, (5) error control parameters, (6) packet length and (7) a timing value for the expected reception slot of a subsequent packet." Yamano at 20:1-7 (emphasis added). 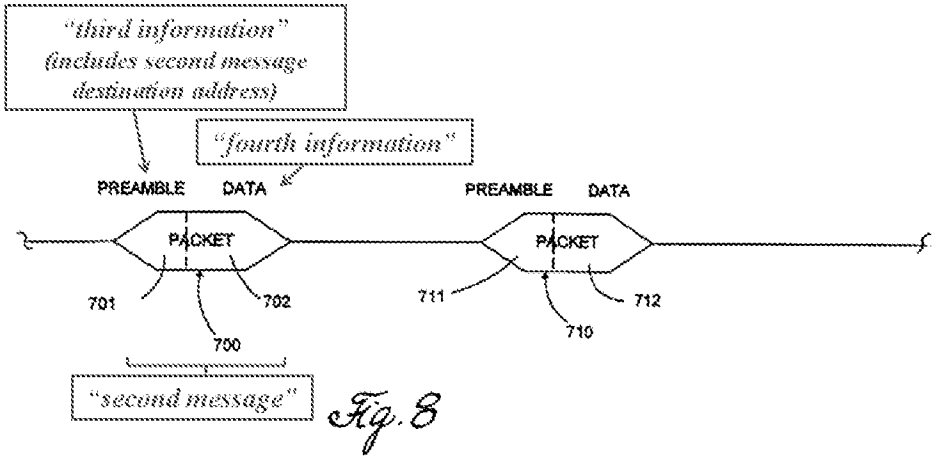 Yamano at Figure 8 (annotated).

[32] *See supra* n.22.

[33] As explained in Section III.D, a POSITA would have been motivated and found it obvious and straightforward to use Yamano's teaching of including a destination address in the preamble portion of a data packet in implementing Snell's communication system (as implemented in light of Harris 4064.4 and Harris AN9614).

'228 Patent Claim 21	SNQ-2: Combined Disclosure of Snell in View of Harris 4064.4, Harris AN9614, Yamano, and Kamerman
	"When the preamble in a burst-mode packet *includes the destination address of the packet*, the receiver circuits can monitor the destination address of the packet, and in response, filter packets which do not need to be demodulated, thereby reducing the processing requirements of the receiver circuits." Yamano at 20:54-59.
[1.F] wherein the second modulation method results in a higher data rate than the first modulation method.	**Snell discloses that the second modulation method results in a higher data rate than the first modulation method. *See, e.g.*, Snell at 5:31-33, 6:52-59, 6:64-66, 7:1-2, 7:5-14, Fig. 3; Harris 4064.4 at 16 (Table 7).** For example, Snell discloses that the second modulation method (*e.g.*, QPSK, or alternatively, DQPSK) results in a higher data rate (*e.g.*, 2 Mbit/s) than the first modulation method (*e.g.*, BPSK, or alternatively, DBPSK) which results in a data rate of 1 Mbit/s. "The present invention provides an extension of the PRISM 1 product from *1 Mbit/s BPSK and 2 Mbit/s QPSK* to 5.5 Mbit/s BPSK and 11 Mbit/s QPSK." Snell at 5:31-33 "*The PLCP preamble and PLCP header are* always at *1 Mbit/s*, Diff encoded, scrambled and spread with an 11 chip barker." Snell at 6:64-66. "Now relating to the PLCP header 91, the SIGNAL is: 0Ah — 1 Mbit/s BPSK, 14h — 2 Mbit/S QPSK, 37h — 5.5 Mbit/s BPSK, and 6Eh — 11 Mbit/s QPSK. " Snell at 6:52-59. "SIGNAL is indicated by 2 control bits and then formatted as described." Snell at 7:1-2. "MPDU is serially provided by Interface 80 and is the variable data scrambled for normal operation. The reference phase for the first symbol of the MPDU is the output phase of the last symbol of the header for Diff Encoding. The last symbol of the header into the scrambler 51 must be followed by the first bit of the MPDU. The variable data may be modulated and demodulated in different formats than the header portion to thereby increase the data rate, and while a switchover as indicated by

'228 Patent Claim 21	SNQ-2: Combined Disclosure of Snell in View of Harris 4064.4, Harris AN9614, Yamano, and Kamerman
	the switchover point in FIG. 3, occurs on-the-fly." Snell at 7:5-14. *See also, e.g.*, Snell at Fig. 3; Harris 4064.4[34] at 16 (Table 7).
21. The master communication device as in claim 1, wherein the first information that is included in the first message comprises the first message address data.	**Snell in view of Yamano discloses that the first information that is included in the first message comprises the first message address data.** *See* claim 1, Element 1.C.

E. SNQ-3: Unpatentability of Claim 21 Under 35 U.S.C. § 103 Over Snell, Harris 4064.4, the Admitted Prior Art, Upender, Yamano, and Kamerman

Requesters submit that the combined teachings of Snell (submitted herewith as Exhibit D), Harris 4064.4 (submitted herewith as Exhibit E), the Admitted Prior Art ('228 patent at 3:64-5:7, Figs. 1, 2), Upender (submitted herewith as Exhibit G), Yamano (submitted herewith as Exhibit H), and Kamerman (submitted herewith as Exhibit I) raise a substantial new question of patentability with respect to claim 21 of the '228 patent, and that claim 21 of the '228 patent is unpatentable under 35 U.S.C. 103 as obvious over Snell in view of Harris 4064.4, the Admitted Prior Art, Upender, Yamano, and Kamerman.[35]

A POSITA would have been motivated and found it obvious and straightforward to use Harris 4064.4's teachings of modulating the preamble and header portions of a data packet using

[34] *See supra* n.22.

[35] Requesters submit that, as set forth in SNQ-1, the Harris 4064.4 reference is incorporated by reference into Snell and, therefore, is part of the express disclosure of Snell. To the extent, however, that it is deemed that Harris 4064.4 should be treated as independent references from Snell, Requesters have set forth in SNQ-3 a detailed explanation as to why the Challenged Claim is invalid as obvious based on a combination of Snell, Harris 4064.4, the Admitted Prior Art, Upender, Yamano and Kamerman.

Rembrandt Wireless
Ex. 2012
Apple Inc. v. Rembrandt Wireless Technologies, LP, IPR2020-00033
Page 906

DBPSK modulation and modulating the payload portion of the data packet using DBPSK or DQPSK modulation (as indicated by the SIGNAL field in the header portion) to advantageously provide for switching between DBPSK and DQPSK modulation types in implementing an IEEE 802.11 system (*see* Harris 4064.4 at 1, 3) such as disclosed in Snell. Harris 4064.4 is incorporated by reference into Snell (Snell at 5:13-17), both references are directed to the PRISM chipset and HSP 3824 baseband processor (Harris 4064.4 at 1; Snell at 1:47-63, 5:8-17, 5:31-33), and Harris 4064.4 is a publication of Harris Corporation, the same original assignee of Snell. It would have been routine and straightforward for a POSITA to use the teachings of Harris 4064.4 with the teachings of Snell, in light of the foregoing including Snell's express direction to apply the teachings of Harris 4064.4, and further because, in combination, each element (Harris 4064.4's teaching of modulating the preamble and header portions of a data packet using DBPSK modulation and modulating the payload portion of the data packet using DBPSK or DQPSK modulation and Snell's communication system for transmitting data packets modulated using different modulation methods) performs the same function as it would separately, yielding nothing more than predictable results. *KSR*, 550 U.S. at 417. A POSITA would have thus recognized that this combination (yielding the claimed limitation) would have worked as expected. For these reasons, a POSITA would have been motivated and found it obvious and straightforward to use Harris 4064.4's teachings in implementing Snell's communication system.

A POSITA would have been motivated and found it obvious and straightforward to use the Applicant's Admitted Prior Art of a master/slave communication system (*see* '228 patent at 3:64-5:7, Figs. 1, 2) in implementing Snell's communication system (as implemented in light of Harris 4064.4), because a polled (master/slave) communication system was a popular

Rembrandt Wireless
Ex. 2012
Apple Inc. v. Rembrandt Wireless Technologies, LP, IPR2020-00033
Page 907

communication protocol with recognized benefits prior to the earliest claimed priority date. Snell is in the same field of art as the Admitted Prior Art, with both relating to a communication system among transceivers. *See, e.g.*, Snell at 1:34-46; Harris AN9614 at 3 (*see also* Snell at 5:2-7); '228 patent at 3:64-4:1. Snell further incorporates by reference Harris AN9614 (Snell at 5:2-7), which is an application note for the Harris PRISM chipset and HSP3824 baseband processor described in Snell. Harris AN9614 at 1 ("Using the *PRISM™ Chip Set*…"), 2 ("*The HSP3824* performs the baseband demodulation function."); Snell at 5:30-32 ("*The present invention provides an extension of the PRISM 1 product* …"), 5:11-13 ("*The conventional Harris PRISM 1 chip set includes* a low data rate DSS baseband processor available under the designation *HSP3824*). Harris AN9614 expressly teaches that the communications between Snell's transceivers may operate according to a "polled" (master/slave) protocol. *See, e.g.*, Harris AN9614 ("the controller can keep adequate time to operate either a *polled* or time allocated *scheme*."). Similarly, the admitted prior art in the '228 patent also describes using a "*polled* multipoint communication protocol," which is a master/tributary (*i.e.*, master/slave) system. '228 patent at 4:30-33. As shown in Fig. 1 below, the admitted prior art of the '228 patent discloses a master transceiver 24 that communicates with a plurality of tributary transceivers 26. '228 patent at 3:64-4:3, Fig. 1.

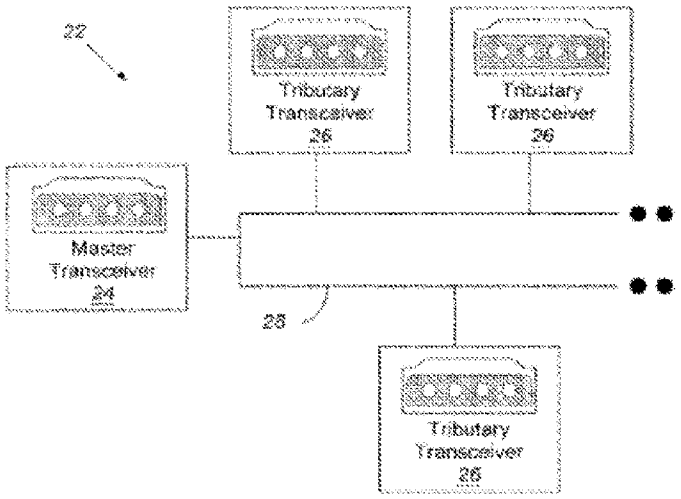

FIG. 1
Prior Art

'228 patent, Fig. 1.

Upender is in the same field of art as Snell, with both relating to protocols for communications over a network. *See, e.g.*, Upender at 7 ("let's examine various *commonly available media access protocols*"), 7 ("*In this protocol,* a centrally assigned master sends a polling message to the slave nodes, giving them explicit permission *to transmit on the network*."). Upender further confirms that a person of ordinary skill in the art would be motivated to use a master/slave protocol in implementing the teachings of Snell (as implemented in light of Harris 4064.4). Upender discusses a finite list of well-known communications protocols applicable for use in a network setting, including a polled (master/slave) protocol, and expressly teaches benefits of using a polled (master/slave) protocol. For example, Upender teaches that "*[p]olling is one of the more popular protocols* for embedded systems *because of its simplicity and determinacy*. In this protocol, a centrally assigned master periodically polls the slave nodes for information." Upender at 7; *see also* IPR2014-00892, Pap. 46 at 16-17 (citing Upender at 7 and finding that "Upender teaches that master/slave protocols were widely used and

a good choice for simple systems"); '228 Prosecution History at 352-353August 26, 2016; IPR2014-00892, Ex. 1323 (Declaration of David Goodman) ¶¶111-125. While Upender discloses tradeoffs of using a master/slave protocol as compared with other communication protocols (*see* Upender at 11, Table 1), to the extent Patent Owner incorrectly argues that discussion of these tradeoffs is a teaching away, this should be rejected as Upender expressly teaches that a protocol for a particular application should be selected in light of the respective costs and benefits of available protocols, nothing that the discussion of the strengths and weaknesses of the different protocols "should allow you to select the best protocol to match your needs"; thus it does not teach away from using the master/slave protocol. Upender at 10-11; *see also* IPR2014-00892, Pap. 46 at 17 (citing Upender at 10-11 and finding that Upender does not "teach away" from using the master/slave protocol); '228 Prosecution History at 353. Upender's express teaching that a polled (master/slave) protocol is advantageous for its "simplicity and determinacy," would have motivated a POSITA to use such a protocol in implementing Snell's communication system, particularly in any system in which simplicity and determinacy are important considerations. Upender at 7; *see also* IPR2014-00892, Pap. 46 at 16-18; '228 Prosecution History at 352-354. Upender further teaches that a polled (master/slave) protocol is "*ideal for a centralized data-acquisition system* where peer-to-peer communication and global prioritization are not required," such as Snell's centralized data-acquisition system comprising an access point transceiver supporting a group of transceivers which does not require communicating using peer-to-peer communication or global prioritization. *See* Snell at 1:34-46.

In addition, the Admitted Prior Art demonstrates that polled (master/slave) protocols were well-known (*see* '228 patent at 3:64-4:1), as also further confirmed by Upender (*see* Upender at 7 ("let's examine various *commonly available media access protocols*"), 7 ("*polling*

[(master/slave)] is one of the more popular protocols"), and thus implementing a polled (master/slave) protocol in Snell's transceiver (as implemented in light of Harris 4064.4), which serves as an access point to support communications with multiple other transceivers and is also operable according to a polled (master/slave) protocol, would involve nothing more than using common and known techniques to improve a similar system in the same way to yield predictable results. *KSR*, 550 U.S. at 416. A POSITA would have thus recognized that this combination (yielding the claimed limitation) would have worked as expected. For these reasons, a POSITA would have been motivated and found it obvious and straightforward to implement the admitted prior art of a master/slave communication system in implementing Snell's system (as implemented in light of Harris 4064.4).

It was well-known in the art, as demonstrated by Yamano, that packets can be advantageously addressed for an intended destination. A POSITA would have been motivated and found it obvious and straightforward to use Yamano's teaching of including a destination address in the preamble portion of a data packet in implementing Snell's data packet comprising preamble, header, and MPDU data portions (as implemented in light of Harris 4064.4 and the Admitted Prior Art) to advantageously specify which receiver the data is intended for and to beneficially reduce the processing requirements at the receiving device, as also taught by Yamano. Snell and Yamano are in the same field of art, with both relating to transmitting data packets over a network (*see, e.g.*, Snell at 1:55-58, 2:61-63, 2:66-3:3, 5:18-21, 6:48-63, Fig. 3; Yamano at 1:1-29, 19:54-20:33, Fig. 8), at varying rates (*see, e.g.*, Snell at 2:15-17, 6:52-59; Yamano at 19:54-56). Yamano expressly teaches that including a destination address in the preamble portion of the data packet, which precedes the data portion, will advantageously reduce processing requirements of receiving devices because the receiving device can filter out packets

which it does not need to demodulate. Yamano at 20:54-59 ("When the preamble in a burst-mode packet *includes the destination address of the packet*, the receiver circuits can monitor the destination address of the packet, and in response, filter packets which do not need to be demodulated, thereby reducing the processing requirements of the receiver circuits."). In addition, Snell teaches structuring its data packet to include a preamble, header, and MPDU data portion (*see, e.g.*, Snell at 6:35-36, 6:64-66, 7:5-14, Fig. 3), and Yamano teaches structuring its data packet to also include a preamble and data portion, and to place the destination address in the preamble portion (Yamano at 19:63-20:7, Fig. 8). It would have been routine and straightforward for a POSITA to include a destination address in the preamble portion of a data packet, as taught by Yamano, in implementing Snell's system for transmitting data packets between transceivers, as Snell teaches that its data packet already includes a preamble portion—and in combination, each element (Yamano's teaching of placing a destination address in the preamble and Snell's teaching of a system for communicating data packets modulated according to different modulation methods between transceivers) performs the same function as it would separately, yielding nothing more than predictable results. *KSR Int'l Co. v. Teleflex Inc.*, 550 U.S. 398, 417 (2007). A POSITA would have thus recognized that this combination (yielding the claimed limitation) would have worked as expected. For these reasons, a POSITA would have been motivated and found it obvious and straightforward to use Yamano's advantageous teachings of including a destination address in the preamble of a data packet in implementing Snell's communication system (as implemented in light of Harris 4064.4 and the Admitted Prior Art).

It was also well-known in the art, as demonstrated by Kamerman, to transmit a first data packet where the data is modulated using a first modulation method, such as BPSK

(corresponding to a lower data transfer rate), and to next transmit a second data packet where the data is modulated using a second modulation method, such as QPSK (corresponding to a higher data transfer rate). A POSITA would have been motivated and found it obvious and straightforward to use Kamerman's teaching of transmitting a first data packet where the data is modulated using a first modulation method and next transmitting a second data packet where the data is modulated using a second modulation method in implementing Snell's system for communicating data packets modulated according to different modulation methods (implemented using the teachings of Harris 4064.4, the Admitted Prior Art, and Yamano, as discussed above) to advantageously maximize the data transfer rate and adapt to changing channel conditions (as also taught by Kamerman). In particular, Kamerman expressly teaches that it is beneficial to transmit the data of a first data packet using a first modulation method corresponding to a lower data transfer rate (*e.g.*, BPSK modulation at 1 mbps) during higher load conditions when a more robust signal is needed due to "mutilation of transmissions by interference," and to next transmit the data of a second data packet using a second modulation method corresponding to a higher data transfer rate (*e.g.*, QPSK modulation at 2 mbps) (*i.e.*, falling forward) to maximize the data transfer rate during lower load conditions when the connection is more reliable. *See* Kamerman at 6 ("Then there is looked to *automatic rate control* to keep the cochannel interference at a tolerable level."), 11 ("The basic rate adaptation scheme could be: after unacknowledged packet transmissions the rate falls back, and *after a number (e.g. 10) of successive correctly acknowledged packet transmissions the bit rate goes up.*"), 11 ("*At lower load in the neighbor cells the highest bit rate can be used more often.* At higher load the transmissions from the accesspoint to stations at the outer part of the cells, will be done at fallback rates due to mutilation of transmissions by interference. In practice the network load for

LANs at nowadays client-server applications is very bursty, with sometimes transmission bursts over an individual links and low activity during the major part of the time. Therefore the higher bit rate can be used during the most of the time, and at high load in the neighbor cells … there will be switched to fall back rates in the outer part of the cell."), 12 ("This automatic rate selection gives fall forward at reliable connections and fall back at strong cochannel interference. Therefore it gives adaptation of the bit rate to the interference as it occurs in time depending on positions as load.").

Moreover, Snell and Kamerman are in the same field of art, with both relating to communications between transceivers that use BPSK and QPSK modulation methods to transfer data at different rates according to the draft IEEE 802.11 standard available at that time. *See, e.g.*, Snell at 1:47-63 ("The assignee of the present invention has developed and manufactured a set of integrated circuits for a WLAN under the mark PRISM 1 *which is compatible with the proposed IEEE 802.11 standard*…."), 5:31-33 ("The present invention provides an extension of the PRISM 1 product from *1 Mbit/s BPSK and 2 Mbit/s QPSK*…"); Kamerman at 6 ("This paper considers the critical parameters for *wireless LANs that operate conform to the IEEE 802.11 DSSS (direct sequence spread spectrum) standard*..."), 11 ("IEEE 802.11 DS specifies bit rates of 1 and 2 Mbps.", 11 ("IEEE 802.11 DS specifies BPSK and QPSK…"). It would have been routine and straightforward for a POSITA to use Kamerman's teaching of transmitting a first data packet where the data is modulated using a first modulation method and next transmitting a second data packet where the data is modulated using a second modulation method in implementing Snell's system (implemented in light of Harris 4064.4, the Admitted Prior Art, and Yamano) for communicating data packets modulated according to different modulation methods, as both Snell and Kamerman are directed to IEEE 802.11 systems utilizing BPSK and QPSK

modulation corresponding, respectively, to a lower and higher data transfer rates—and in combination, each element (Kamerman's teaching of transmitting a first data packet where the data is modulated using a first modulation method and next transmitting a second data packet where the data is modulated using a second modulation method and Snell's system for communicating data packets modulated according to different modulation methods) performs the same function as it would separately, yielding nothing more than predictable results. *KSR*, 550 U.S. at 417. A POSITA would have thus recognized that this combination (yielding the claimed limitation) would have worked as expected. For these reasons, a POSITA would have been motivated and found it obvious and straightforward to use Kamerman's teaching of transmitting a first data packet where the data is modulated using a first modulation method and next transmitting a second data packet where the data is modulated using a second modulation method in implementing Snell's system (implemented in light of Harris 4064.4, the Admitted Prior Art, and Yamano) for communicating data packets modulated according to different modulation methods.

The combination of Snell, Harris 4064.4, the Admitted Prior Art, Upender, Yamano, and Kamerman shows or renders obvious each and every element of the invention of claim 21. The relevant teachings of the combination of Snell, Harris 4064.4, the Admitted Prior Art, Upender, Yamano, and Kamerman were not considered during the prior examination of the '228 patent and a reasonable Examiner would consider these disclosures important in determining whether or not the claims are patentable.

Therefore, the combination of Snell, Harris 4064.4, the Admitted Prior Art, Upender, Yamano, and Kamerman raises a substantial new question of patentability with respect to claim 21 of the '228 patent (SNQ-3) and presents new technological teachings not previously

considered in connection with prosecution of the '228 patent. MPEP § 2216. Accordingly, Requesters propose that claim 21 should be rejected under § 103 as rendered obvious by Snell, in view of Harris 4064.4, the Admitted Prior Art, Upender, Yamano, and Kamerman.

The following claim chart demonstrates, in further detail, how each limitation is, at a minimum, obvious in light of Snell, Harris 4064.4, the Admitted Prior Art, Upender, Yamano, and Kamerman.

'228 Patent Claim 21	**SNQ-3: Combined Disclosure of Snell in View of Harris 4064.4, the Admitted Prior Art, Upender, Yamano, and Kamerman**
1.[preamble] A master communication device configured to communicate with one or more slave transceivers according to a master/slave relationship in which a slave communication from a slave device to the master communication device occurs in response to a master communication from the master communication device to the slave device, the master communication device comprising:	**To the extent this preamble is considered a limitation of the claim, Snell in view of the Admitted Prior Art discloses a master communication device configured to communicate with one or more slave transceivers according to a master/slave relationship in which a slave communication from a slave device to the master communication device occurs in response to a master communication from the master communication device to the slave device. *See, e.g.*, Snell at 1:34-46, 1:47-50, 1:55-57, 2:27-30, 4:42-47, 5:18-21; Harris AN9614 at 3.** For example, Snell discloses a "transceiver" that serves as an access point for communicating data with other transceivers connected to a wireless local area network (WLAN). "In a typical WLAN, *an access point provided by a transceiver*, that is, a combination transmitter and receiver, connects to the wired network from a fixed location. Accordingly, the access transceiver receives, buffers, and transmits data between the WLAN and the wired network. *A single access transceiver can support a small group of collocated users within a range of less than about one hundred to several hundred feet. The end users connect to the WLAN through transceivers* which are typically implemented as PC cards in a notebook computer, or ISA or PCI cards for desktop computers. Of course the transceiver may be integrated with any device, such as a hand-held computer." Snell at 1:34-46. "Like the HSP3824 baseband processor, the high data rate baseband processor 40 of the invention contains all of the functions necessary for a full or half duplex packet baseband *transceiver*." Snell at 5:18-21. "The PRISM 1 chip set provides all the functions necessary for full or half duplex, direct sequence spread spectrum, *packet communications* at the

'228 Patent Claim 21	SNQ-3: Combined Disclosure of Snell in View of Harris 4064.4, the Admitted Prior Art, Upender, Yamano, and Kamerman
	2.4 to 2.5 GHz ISM radio band." Snell at 1:55-57. *See also, e.g.,* Snell at 2:27-30 ("It is another object of the invention to provide *a spread spectrum transceiver* and associated method to permit operation at higher data rates and which may switch on-the-fly between different data rates and/or formats."); Snell at 1:47-50 ("The assignee of the present invention has developed and manufactured a set of integrated circuits for a WLAN under the mark PRISM 1 which is compatible with the proposed IEEE 802.11 standard."); Snell at 4:42-47 ("Referring to FIG. 1, a *wireless transceiver 30* in accordance with the invention is first described. The *transceiver 30 may be readily used for WLAN applications* in the 2.4 GHZ ISM band in accordance with the proposed IEEE 802.11 standard. Those of skill in the art will readily recognize other applications for the transceiver 30 as well."). Snell incorporates by reference Harris AN9614,[36] which discloses: "[T]he controller can keep adequate time to operate either a polled or a time allocated scheme. In these modes, the radio is powered off most of the time and only awakens when communications is expected. This station would be awakened periodically to listen for a beacon transmission. The beacon serves to reset the timing and to alert the radio to traffic. If traffic is waiting, the radio is instructed when to listen and for how long. In a polled scheme, the remote radio can respond to the poll with its traffic if it has any. With these techniques, the average power consumption of the radio can be reduced by more than an order of magnitude while meeting all data transfer objectives." Harris AN9614 at 3. **Applicants' Admitted Prior Art[37] discloses a communication device capable of communicating according to a master/slave relationship in**

[36] Snell expressly incorporates by reference "the entire disclosure" of Harris AN9614 (Snell at 5:2-7). *See Harari v. Lee*, 656 F.3d 1331, 1335-36 (Fed. Cir. 2011) ("the entire '579 application disclosure was incorporated by the broad and unequivocal language: 'The disclosures of the two applications are hereby incorporate[d] by reference.'"); *see also Advanced Display Sys., Inc. v. Kent State Univ.*, 212 F.3d 1272, 1282 (Fed.Cir.2000) ("material not explicitly contained in the single, prior art document may still be considered for purposes of anticipation if that material is incorporated by reference into the document.").

[37] In IPR2014-00892, the Board found that the '228's disclosed multipoint communication systems or master/slave systems, depicted in '228 patent, Figures 1 and 2 and 3:64-5:7 is material that may be used as prior art against the patent under §103. IPR2014-00892, Pap. 46 (Final Written Decision) at 13-14; *see Pharmastem Therapeutics, Inc. v. Viacell, Inc.*, 491 F.3d 1342, 1362 (Fed. Cir. 2007) ("Admissions in the specification regarding the prior art are binding

'228 Patent Claim 21	SNQ-3: Combined Disclosure of Snell in View of Harris 4064.4, the Admitted Prior Art, Upender, Yamano, and Kamerman
	which a slave communication from a slave to a master occurs in response to a master communication from the master to the slave. *See, e.g.*, '228 at 3:64-5:7, Figs. 1, 2. For example, the '228 patent discloses a prior art system with master and tributary (slave) transceivers, as shown in Figures 1 and 2 (depicted below). 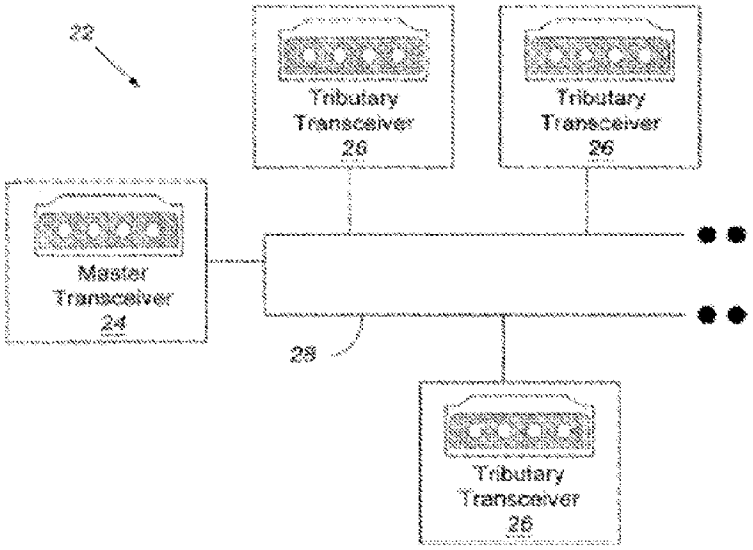 *FIG. 1* **Prior Art** '228 at Fig. 1.

on the patentee for purposes of a later inquiry into obviousness."); *Constant v. Advanced Micro–Devices, Inc.*, 848 F.2d 1560, 1570 (Fed.Cir.1988) (''A statement in the patent that something is in the prior art is binding on the applicant and patentee for determinations of anticipation and obviousness.''). As explained in Section III.E, a POSITA would have been motivated and found it obvious and straightforward to use the Applicant's Admitted Prior Art of a master/slave communication system (*see* '228 patent at 3:64-5:7, Figs. 1, 2) in implementing Snell's communication system (as implemented in light of Harris 4064.4).

'228 Patent Claim 21	SNQ-3: Combined Disclosure of Snell in View of Harris 4064.4, the Admitted Prior Art, Upender, Yamano, and Kamerman
	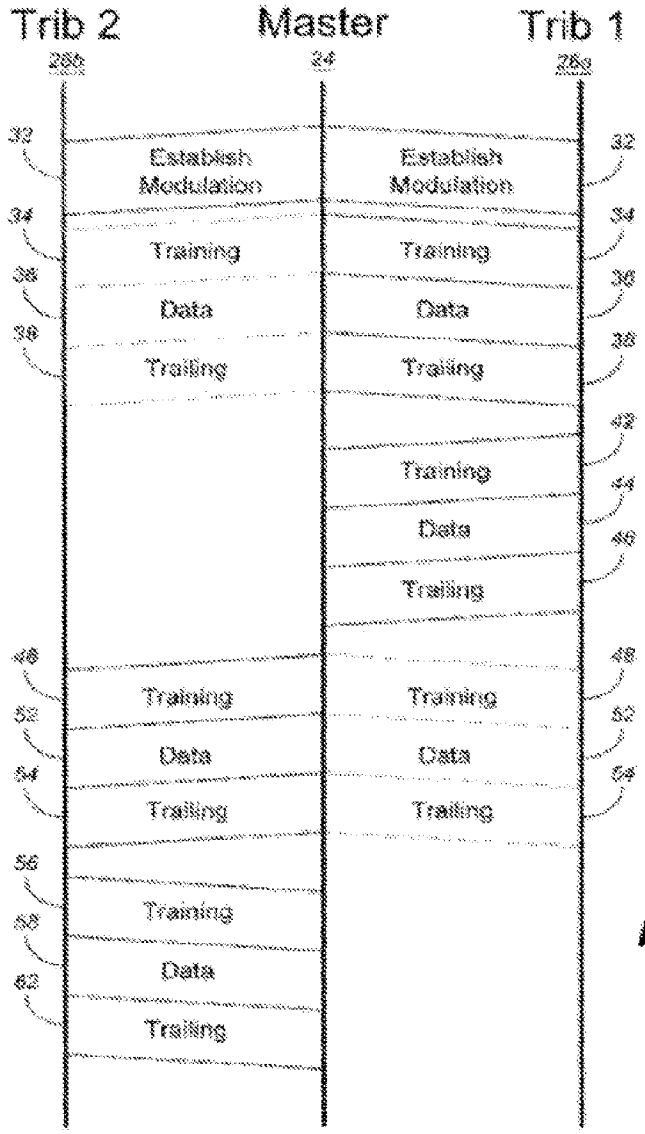 FIG. 2 '228 at FIG 2. "With reference to *FIG. 1, a prior art multipoint communication system 22 is shown to comprise a master modem or transceiver 24, which communicates with a plurality of tributary modems (tribs) or transceivers 26-26 over communication medium 28.* Note that all tribs 26-26 are identical in that they share a common modulation method with the master transceiver 24. Thus, before any communication can begin in multipoint system 22, the master transceiver and the tribs 26-26 must agree on a common modulation method. If a common modulation method is found, the master transceiver 24 and a single trib 26 will then exchange

'228 Patent Claim 21	SNQ-3: Combined Disclosure of Snell in View of Harris 4064.4, the Admitted Prior Art, Upender, Yamano, and Kamerman
	sequences of signals that are particular subsets of all signals that can be communicated via the agreed upon common modulation method. These sequences are commonly referred to as training signals and can be used for the following purposes: 1) to confirm that the common modulation method is available, 2) to establish received signal level compensation, 3) to establish time recovery and/or carrier recovery, 4) to permit channel equalization and/or echo cancellation, 5) to exchange parameters for optimizing performance and/or to select optional features, and 6) to confirm agreement with regard to the foregoing purposes prior to entering into data communication mode between the users. In a multipoint system, the address of the trib with which the master is establishing communication is also transmitted during the training interval. At the end of a data session a communicating pair of modems will typically exchange a sequence of signals known as trailing signals for the purpose of reliably stopping the session and confirming that the session has been stopped. In a multipoint system, failure to detect the end of a session will delay or disrupt a subsequent session. Referring now to FIG. 2, an exemplary multipoint communication session is illustrated through use of a ladder diagram. *This system uses polled multipoint communication protocol. That is, a master controls the initiation of its own transmission to the tribs and permits transmission from a trib only when that trib has been selected.* At the beginning of the session, the master transceiver 24 establishes a common modulation as indicated by sequence 32 that is used by both the master 24 and the tribs 26a, 26b for communication. Once the modulation scheme is established among the modems in the multipoint system, The master transceiver 24 transmits a training sequence 34 that includes the address of the trib that the master seeks to communicate with. In this case, the training sequence 34 includes the address of trib 26a. As a result, trib 26b ignores training sequence 34. After completion of the training sequence 34, master transceiver 24 transmits data 36 to trib 26a followed by trailing sequence 38, which signifies the end of the communication session. Similarly, with reference to FIG. 8, the sequence 170 illustrates a Type A modulation training signal, followed by a Type A modulation data signal. Note that trib 26b ignores data 36 and trailing sequence 38 as it was not requested for communication during training sequence 34. At the end of trailing sequence 38, trib 26a transmits training sequence 42 to initiate a communication session with master transceiver 24. *Because master transceiver 24 selected trib 26a for communication as part of training sequence 34, trib 26a is the only modem that will return a transmission.* Thus, trib 26a transmits data 44 destined for master transceiver 24 followed by trailing sequence 46 to terminate the

'228 Patent Claim 21	SNQ-3: Combined Disclosure of Snell in View of Harris 4064.4, the Admitted Prior Art, Upender, Yamano, and Kamerman
	communication session. *The foregoing procedure is repeated except master transceiver identifies trib 26b in training sequence 48. In this case, trib 26a ignores the training sequence 48 and the subsequent transmission of data 52 and trailing sequence 54 because it does not recognize its address in training sequence 48.* Master transceiver 24 transmits data 52 to trib 26b followed by trailing sequence 54 to terminate the communication session. Similarly, with reference to FIG. 8, sequence 172 illustrates a Type A modulation signal, with notification of a changes to Types B, followed by a Types B modulation data signal. To send information back to master transceiver 24, trib 26b transmits training sequence 56 to establish a communication session. *Master transceiver 24 is conditioned to expect data only from trib 26b because trib 26b was selected as part of training sequence 48.* Trib 26b transmits data 58 to master transceiver 24 terminated by trailing sequence 62." '228 at 3:64-5:7.
[1.A] a master transceiver configured to transmit a first message over a communication medium from the master transceiver to the one or more slave transceivers,	**Snell in view of the Admitted prior art discloses a master transceiver configured to transmit a first message over a communication medium from the master transceiver to the one or more slave transceivers.** *See* Element 1.preamble.
[1.B] wherein the first message comprises: first information modulated according to a first modulation method, second information, including a payload portion, modulated according to the first modulation method, wherein the second information comprises data intended for one of the one or more slave	**Snell in view of Harris 4064.4 discloses that the first message comprises first information modulated according to a first modulation method, second information, including a payload portion, modulated according to the first modulation method, wherein the second information comprises data intended for one of the one or more slave transceivers. *See, e.g.*, Snell at Abstract, 1:34-46, 1:47-50, 1:55-57, 1:58-61, 2:27-30, 2:56-59, 2:61-3:5, 4:42-47, 5:18-2, 6:35-36, 6:52-59, 6:64-66, 7:1-2, 7:5-14, 7:6-8, Figs. 2, 3; Harris AN9614 at 3; Harris 4064.4 at 14, 15, 16, Fig. 10.** For example, Snell discloses a "transceiver" that serves as an access point for communicating "data intended for one of the one or more [other] transceivers" connected to a wireless local area network (WLAN). *See* Element 1.preamble. "In a typical WLAN, *an access point provided by a transceiver*, that is, a combination transmitter and receiver, connects to the wired network from

'228 Patent Claim 21	**SNQ-3: Combined Disclosure of Snell in View of Harris 4064.4, the Admitted Prior Art, Upender, Yamano, and Kamerman**
transceivers and	a fixed location. Accordingly, the access transceiver receives, buffers, and transmits data between the WLAN and the wired network. *A single access transceiver can support a small group of collocated users within a range of less than about one hundred to several hundred feet. The end users connect to the WLAN through transceivers* which are typically implemented as PC cards in a notebook computer, or ISA or PCI cards for desktop computers. Of course the transceiver may be integrated with any device, such as a hand-held computer." Snell at 1:34-46. "The PRISM 1 chip set provides all the functions necessary for full or half duplex, direct sequence spread spectrum, *packet communications* at the 2.4 to 2.5 GHz ISM radio band." Snell at 1:55-57. Snell further discloses transmitting a "first message" comprising "first information" (*e.g.*, PLCP preamble and PLCP header) "modulated according to a first modulation method" (*e.g.*, BPSK) and "second information, including a payload portion" (*e.g.*, MPDU data) "modulated according to the first modulation method" (*e.g.*, BPSK) (as depicted in Figure 3 below). Snell alternatively discloses modulating the "first information" (*e.g.*, PLCP preamble and PLCP header) and "second information, including a payload portion" (*e.g.*, MPDU data) according to <u>DBPSK</u>, which also is a "first modulation method."

'228 Patent Claim 21	SNQ-3: Combined Disclosure of Snell in View of Harris 4064.4, the Admitted Prior Art, Upender, Yamano, and Kamerman
	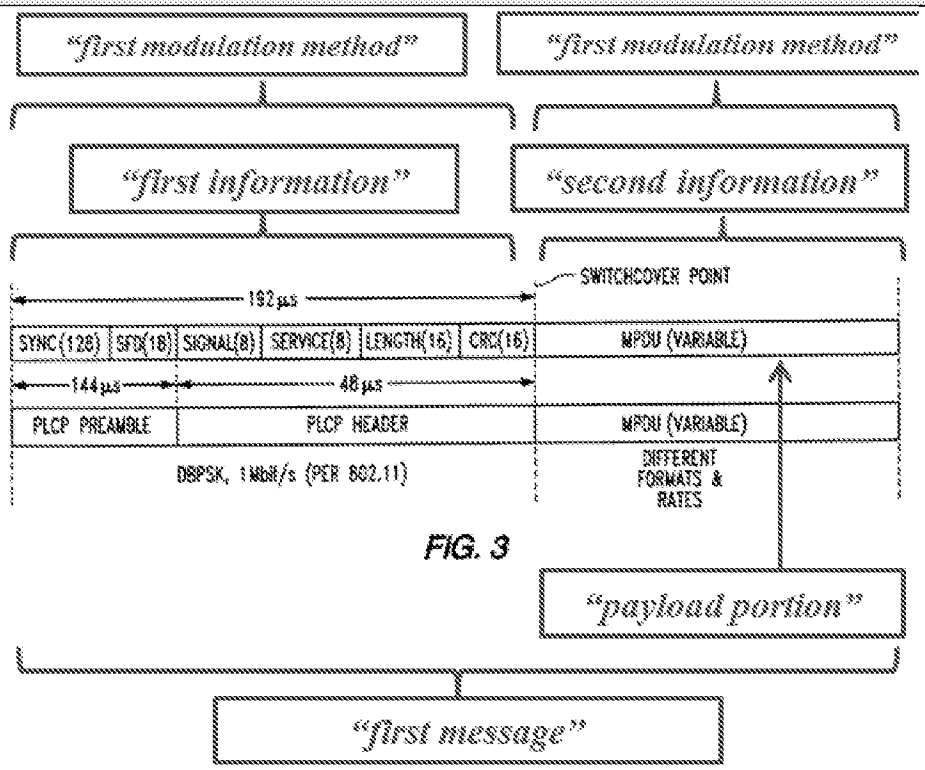 Snell at Fig. 3 (annotated). "The *header may always be BPSK*." Snell at 6:35-36. Snell discloses that the "SIGNAL" in the PLCP header indicates (*e.g.*, using "OAh") the modulation type (*e.g.*, BPSK) used for modulating the MPDU data portion. "Now relating to the PLCP header 91, the SIGNAL is: 0Ah — 1 Mbit/s BPSK, 14h — 2 Mbit/S QPSK, 37h — 5.5 Mbit/s BPSK, and 6Eh — 11 Mbit/s QPSK. " Snell at 6:52-59. "SIGNAL is indicated by 2 control bits and then formatted as described." Snell at 7:1-2. "MPDU is serially provided by Interface 80 and is the variable data scrambled for normal operation. The reference phase for the first symbol

'228 Patent Claim 21	SNQ-3: Combined Disclosure of Snell in View of Harris 4064.4, the Admitted Prior Art, Upender, Yamano, and Kamerman
	of the MPDU is the output phase of the last symbol of the header for Diff Encoding. The last symbol of the header into the scrambler 51 must be followed by the first bit of the MPDU. The variable data may be modulated and demodulated in different formats than the header portion to thereby increase the data rate, and while a switchover as indicated by the switchover point in FIG. 3, occurs on-the-fly." Snell at 7:5-14. "The modulator preferably comprises means for *operating in one of a bi-phase PSK (BPSK) modulation mode at a first data rate defining a first format,* and a quadrature PSK (QPSK) mode at a second data rate defining a second format." Snell at 2:56-59. "In particular, the HSP3824 baseband processor manufactured by Harris Corporation *employs quadrature or bi-phase phase shift keying (QPSK or BPSK) modulation schemes*." Snell at 1:58-61. *See also, e.g.*, Snell at Abstract ("The modulator and demodulator are each preferably operable *in one of a bi-phase PSK (BPSK) mode* at a first data rate and *a quadrature PSK (QPSK) mode* at a second data rate. These formats may also be switched on-the-fly in the demodulator."), 2:15-17 ("Moreover, a WLAN application, for example, may require a change between *BPSK and QPSK* during operation, that is, on-the-fly."). "*The PLCP preamble and PLCP header are always* at 1 Mbit/s, *Diff encoded*, scrambled and spread with an 11 chip barker." Snell at 6:64-66. "The modulator may also preferably include header modulator means for modulating data packets to include *a header at a predetermined modulation and a third data rate defining a third format…. The third format is preferably differential BPSK*." Snell at 2:61-3:5. "The reference phase for the first symbol of the *MPDU* is the output phase of the last symbol of the header *for Diff Encoding*." Snell at 7:6-8. 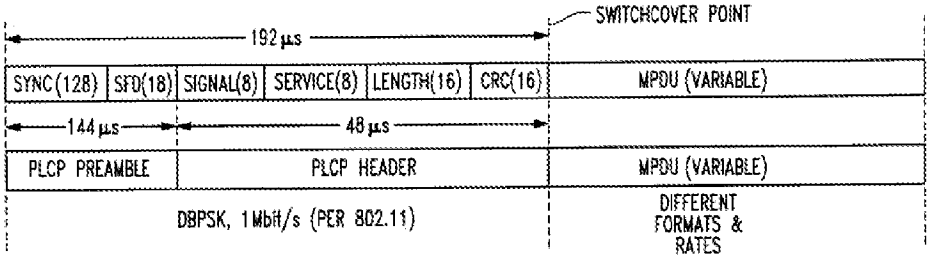 *FIG. 3*

'228 Patent Claim 21	SNQ-3: Combined Disclosure of Snell in View of Harris 4064.4, the Admitted Prior Art, Upender, Yamano, and Kamerman
	Snell at Fig. 3. 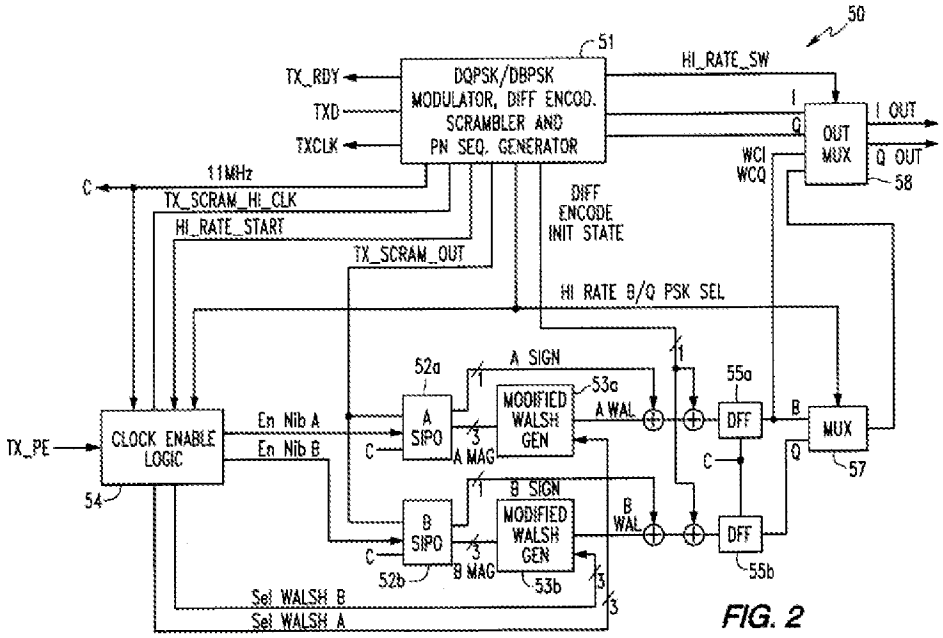 FIG. 2 Snell at Fig. 2. 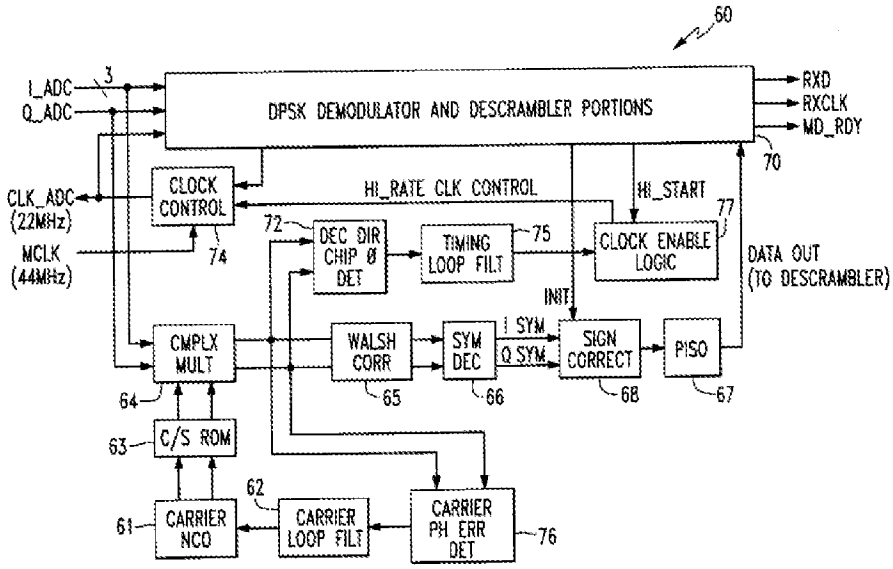 FIG. 5

'228 Patent Claim 21	SNQ-3: Combined Disclosure of Snell in View of Harris 4064.4, the Admitted Prior Art, Upender, Yamano, and Kamerman
	Snell at Fig. 5. Snell incorporates by reference Harris 4064.4,[38] which discloses: "*The preamble and header are always transmitted as DBPSK* waveforms while the *data packets can be configured to be either DBPSK* or DQPSK." Harris 4064.4 at 14. "The *preamble is always transmitted as a DBPSK* waveform with a programmable length of up to 256 symbols long." Harris 4064.4 at 15. "*Signal Field (8 Bits) - This field indicates whether the data packet that follows the header is modulated as DBPSK* or DQPSK. In mode 3 the HSP3824 receiver looks at the signal field to determine whether it needs to switch from DBPSK demodulation into DQPSK demodulation at the end of the always DBPSK preamble and header fields." Harris 4064.4 at 15. "Mode 3 - In this mode the preamble is programmable up to 256 bits (all 1's). The header in this mode is using all available fields. *In mode 3 the signal field defines the modulation type of the data packet (DBPSK* or DQPSK) so the receiver does not need to be preprogrammed to anticipate one or the other. In this mode the device checks the Signal field for the data packet modulation and it switches to DQPSK if it is defined as such in the signal field. *Note that the preamble and header are always DBPSK* the modulation definition applies only for the data packet." Harris 4064.4 at 16. *See also, e.g.*, Harris 4064.4 at 14 ("The HSP3824 transmitter is designed as a Direct Sequence Spread Spectrum DBPSK/DQPSK modulator."), Harris 4064.4 at 14 ("The modulator is capable of switching rate automatically in the case where the preamble and header information are DBPSK modulated, and the data is DQPSK modulated."), Harris 4064.4 at FIGURE 10.
[1.C] first message	**Snell in view of Yamano discloses that the first message comprises**

[38] *See supra* n.35. As explained above in Section III.E, a POSITA would have been motivated and found it obvious and straightforward to use Harris 4064.4's teachings of modulating the preamble and header portions of a data packet using DBPSK modulation and modulating the payload portion of the data packet using DBPSK or DQPSK modulation (as indicated by the SIGNAL field in the header portion) to advantageously provide for switching between DBPSK and DQPSK modulation types in implementing an IEEE 802.11 system such as disclosed in Snell.

'228 Patent Claim 21	SNQ-3: Combined Disclosure of Snell in View of Harris 4064.4, the Admitted Prior Art, Upender, Yamano, and Kamerman
address information that is indicative of the one of the one or more slave transceivers being an intended destination of the second information; and	**first message address information that is indicative of the one of the one or more slave transceivers being an intended destination of the second information.** ***See, e.g.*****, Snell at 6:35-36, 6:64-66, 7:5-10, Fig. 3; Harris 4064.4 at 14; Yamano at 19:63-64, 20:1-7, 20:54-59, Fig. 8.** For example, Snell discloses transmitting "a first message" including a PLCP preamble and PLCP header, and MPDU data, as shown in Figure 3 below. 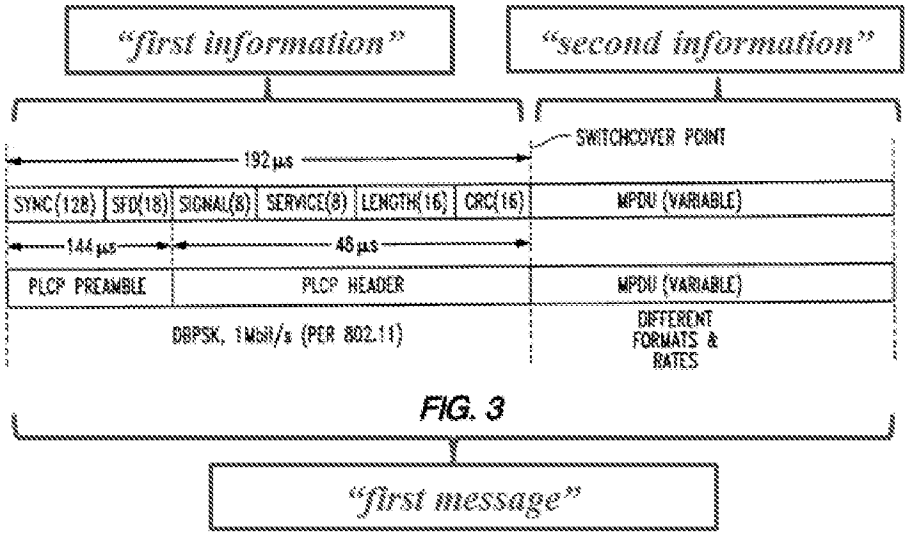 Snell at Fig. 3 (annotated). "The *header* may always be BPSK." Snell at 6:35-36. "The *PLCP preamble and PLCP header* are always at 1 Mbit/s, Diff encoded, scrambled and spread with an 11 chip barker." Snell at 6:64-66. "*MPDU* is serially provided by Interface 80 and *is the variable data* scrambled for normal operation. The reference phase for the first symbol of the MPDU is the output phase of the last symbol of the header for Diff Encoding. The last symbol of the header into the scrambler 51 must be followed by the first bit of the MPDU." Snell at 7:5-10. Snell incorporates by reference Harris 4064.4,[39] which discloses: "The *preamble and header* are always transmitted as DBPSK waveforms while the *data packets* can be configured to be either DBPSK or

[39] *See supra* n.35.

'228 Patent Claim 21	SNQ-3: Combined Disclosure of Snell in View of Harris 4064.4, the Admitted Prior Art, Upender, Yamano, and Kamerman
	DQPSK." Harris 4064.4 at 14. **Yamano[40] discloses that the first message comprises first message address information that is indicative of the one of the one or more slave transceivers being an intended destination of the second information. *See, e.g.*, Yamano at 19:63-64, 20:1-7, 20:54-59, Fig. 8.** For example, Yamano discloses transmitting a "first message" (*e.g.*, data packet including a preamble and main body) that includes "first message address information that is indicative" (*e.g.*, "destination address" in the preamble) of the transceiver that is the "intended destination of the second information." "*Packet 700* includes a *preamble 701* and a *main body 702*." Yamano at 19:63-64. "For example, *preamble 701* can include information which identifies: (1) a version or type field for the preamble, (2) *packet source and destination addresses*, (3) the line code (i.e., the modem protocol being used), (4) the data rate, (5) error control parameters, (6) packet length and (7) a timing value for the expected reception slot of a subsequent packet." Yamano at 20:1-7. 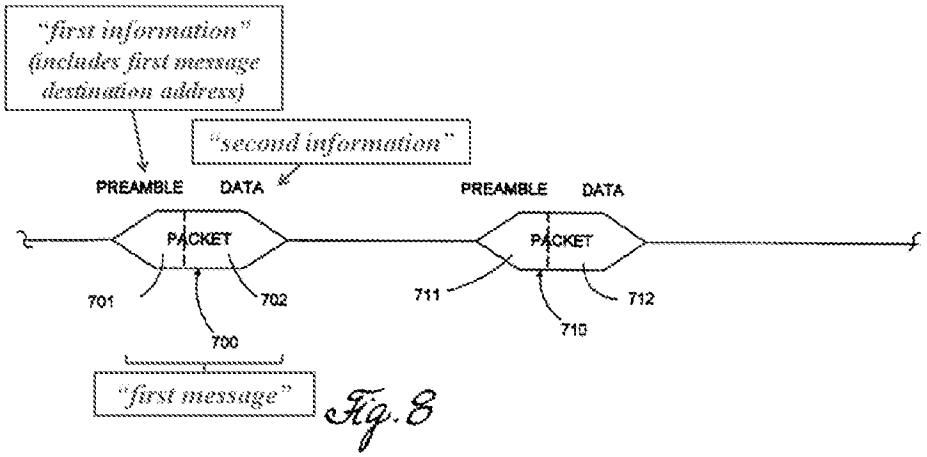 Yamano at Fig. 8 (annotated). "When the preamble in a burst-mode packet *includes the destination address of the packet*, the receiver circuits can monitor the destination

[40] As explained in Section III.E, a POSITA would have been motivated and found it obvious and straightforward to use Yamano's teaching of including a destination address in the preamble portion of a data packet in implementing Snell's communication system (as implemented in light of Harris 4064.4 and the Admitted Prior Art).

'228 Patent Claim 21	SNQ-3: Combined Disclosure of Snell in View of Harris 4064.4, the Admitted Prior Art, Upender, Yamano, and Kamerman
	address of the packet, and in response, filter packets which do not need to be demodulated, thereby reducing the processing requirements of the receiver circuits." Yamano at 20:54-59.
[1.D] said master transceiver configured to transmit a second message over the communication medium from the master transceiver to the one or more slave transceivers wherein the second message comprises: third information modulated according to the first modulation method, wherein the third information comprises information that is indicative of an impending change in modulation to a second modulation method, and fourth information, including a payload portion, transmitted after transmission of the third information, the fourth information being modulated according to the second modulation method, the second	**Snell in view of Kamerman discloses that the master transceiver is configured to transmit a second message over the communication medium from the master transceiver to the one or more slave transceivers wherein the second message comprises: third information modulated according to the first modulation method, wherein the third information comprises information that is indicative of an impending change in modulation to a second modulation method, and fourth information, including a payload portion, transmitted after transmission of the third information, the fourth information being modulated according to the second modulation method, the second modulation method being of a different type than the first modulation method, wherein the fourth information comprises data intended for a single slave transceiver of the one or more slave transceivers.**[41] ***See, e.g.*****, Snell at 1:34-46, 1:47-50, 1:55-57, 2:27-30, 2:61-3:5, 4:42-47, 5:18-2, 6:35-36, 6:52-59, 6:64-66, 7:1-2, 7:5-14, Figs. 2, 3, 5; Harris AN9614 at 3; Harris 4064.4 at 14-16, Fig. 10; Kamerman at 6, 11, 12.** For example, Snell discloses a "transceiver" that serves as an access point for communicating "data intended for a [transceiver]" connected to a wireless local area network (WLAN). *See* Element 1.preamble. Snell also discloses that the transceiver transmits data packets to another transceiver, where the communication may switch on-the-fly between a "first modulation method" (*e.g.*, BPSK) and a "second modulation method" (*e.g.*, QPSK) that is "of a different type than the first modulation method." Snell thus teaches transmitting a "first message" and a "second message" as shown in Figure 3 below.

[41] In IPR2014-00892, the Board construed the limitation "different 'types' of modulation methods" in claim 1 to mean "modulation methods that are incompatible with each other" and found that "two modulation methods that are based on varying the same one of the frequency, amplitude, or phase of the carrier wave may be different 'types' of modulation methods." IPR2014-00892, Pap. 46 (Final Written Decision) at 13. The Board also found that the "DQPSK … modulation method[] [is] incompatible with DBPSK modulation." *Id.* at 19.

'228 Patent Claim 21	SNQ-3: Combined Disclosure of Snell in View of Harris 4064.4, the Admitted Prior Art, Upender, Yamano, and Kamerman
modulation method being of a different type than the first modulation method, wherein the fourth information comprises data intended for a single slave transceiver of the one or more slave transceivers, and	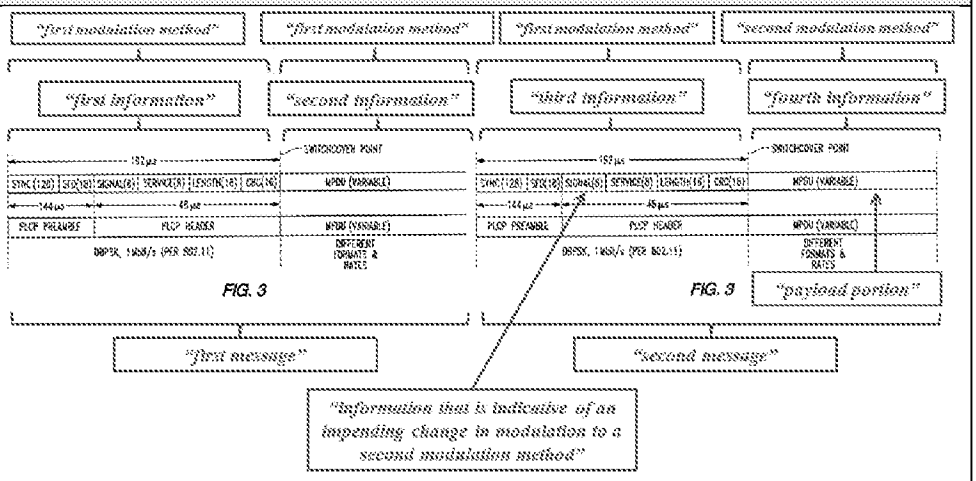 Snell at Fig. 3. (annotated).[42]

[42] As Snell teaches communicating multiple data packets with the ability to "switch on-the-fly between different data rates and/or formats." Based on this disclosure, a person of ordinary skill in the art would have understood that Snell teaches that a series of packets may be sent that switch from using a first modulation method to using a second modulation method for the payload portion of the data packet. For example, the "first message" in Snell comprises "first information" (*e.g.*, PLCP preamble and PLCP header) that is "modulated according to a first modulation method" (*e.g.*, BPSK) where the "first information" (*e.g.*, "SIGNAL" field in PLCP header) indicates (*e.g.*, using "0Ah") the modulation type (*e.g.*, BPSK) used for modulating "second information" (*e.g.*, MPDU data). In the "first message," the "SIGNAL" field in the PLCP header uses a code (*e.g.*, "0Ah") that indicates that the "second information" (*e.g.*, MPDU data) is modulated "according to the first modulation method" (*e.g.*, BPSK at 1 Mbit/s).

Snell's transceiver then transmits a "second message" comprising "third information" (*e.g.*, PLCP preamble and PLCP header) "modulated according to the first modulation method" (*e.g.*, BPSK) where the "third information comprises information" (*e.g.*, "SIGNAL" field in PLCP header) "that is indicative of an impending change in modulation" (*e.g.*, using "14h") "to a second modulation method" (*e.g.*, QPSK) used for modulating "fourth information." For example, in the "second message," the "SIGNAL" field in the PLCP header uses a code (*e.g.*, "14h") that indicates that the "fourth information" (*e.g.*, MPDU data) is modulated "according to the second modulation method" (*e.g.*, QPSK at 2 Mbit/s), wherein the "second modulation method" is of a "different type than the first modulation method." This "SIGNAL" is "indicative of an impending change" from the "first modulation method" to the "second modulation method" because it is indicating a change from, for example, QPSK modulation to BPSK modulation. In addition, transmitting the data using the "second modulation method"— QPSK—results in a data rate of 2 Mbit/s which is higher than transmitting the data using the "first modulation method"— BPSK at 1 Mbit/s.

'228 Patent Claim 21	SNQ-3: Combined Disclosure of Snell in View of Harris 4064.4, the Admitted Prior Art, Upender, Yamano, and Kamerman
	"The modulator may also preferably include header modulator means for modulating *data packets*." Snell at 2:61-63. "The PRISM 1 chip set provides all the functions necessary for full or half duplex, direct sequence spread spectrum, *packet communications* at the 2.4 to 2.5 GHz ISM radio band." Snell at 1:55-57. "It is another object of the invention to provide a spread spectrum transceiver and associated method to permit operation at higher data rates and *which may switch on-the-fly between different data rates and/or formats.*" Snell at 2:27-30. "*The variable data may be modulated and demodulated in different formats than the header portion* to thereby increase the data rate, and *while a switchover as indicated by the switchover point in FIG. 3, occurs on-the-fly*." Snell at 7:10-14. "The *header* may always be *BPSK*." Snell at 6:35-36. "Now relating to the *PLCP header* 91, *the SIGNAL* is: 0Ah — 1 Mbit/s BPSK, 14h — 2 Mbit/S QPSK, 37h — 5.5 Mbit/s BPSK, and 6Eh — 11 Mbit/s QPSK." Snell at 6:52-59. "SIGNAL is indicated by 2 control bits and then formatted as described." Snell at 7:1-2. "*MPDU* is serially provided by Interface 80 and *is the variable data* scrambled for normal operation. The reference phase for the first symbol of the MPDU is the output phase of the last symbol of the header for Diff Encoding. The last symbol of the header into the scrambler 51 must be followed by the first bit of the MPDU. *The variable data may be modulated and demodulated in different formats* than the header portion to thereby increase the data rate, and while a switchover as indicated by the switchover point in FIG. 3, occurs on-the-fly." Snell at 7:5-14. Snell describes that the "first modulation method" may be BPSK and the "second modulation method" may be QPSK, which is of a different "type" than the first modulation method, and alternatively describes that the "first modulation method" may be differential BPSK ("DBPSK") and

'228 Patent Claim 21	SNQ-3: Combined Disclosure of Snell in View of Harris 4064.4, the Admitted Prior Art, Upender, Yamano, and Kamerman
	that the "second modulation method" may be differential QPSK ("DQPSK"), which is also of a different "type" than the first modulation method. Thus, Snell alternatively describes modulating the "first information" (*e.g.*, PLCP preamble and PLCP header) according to a "first modulation method" (*e.g.*, DBPSK) and "second information" (*e.g.*, MPDU data) according to either a "first modulation method" (*e.g.*, DBPSK) or "second modulation method" (*e.g.*, QBPSK). "*The PLCP preamble and PLCP header are always* at 1 Mbit/s, *Diff encoded*, scrambled and spread with an 11 chip barker." Snell at 6:64-66. "The modulator may also preferably include header modulator means for modulating data packets to include *a header at a predetermined modulation and a third data rate defining a third format…. The third format is preferably differential BPSK*." Snell at 2:61-3:5. "The reference phase for the first symbol of the *MPDU* is the output phase of the last symbol of the header *for Diff Encoding*." Snell at 7:6-8. *See also, e.g.*, Snell at Figs. 2, 3, 5. Snell incorporates by reference Harris 4064.4,[43] which discloses: "*The preamble and header are always transmitted as DBPSK* waveforms while the *data packets can be configured to be either DBPSK or DQPSK*." Harris 4064.4 at 14. "The *preamble is always transmitted as a DBPSK* waveform with a programmable length of up to 256 symbols long." Harris 4064.4 at 15. "*Signal Field (8 Bits) - This field indicates whether the data packet that follows the header is modulated as DBPSK or DQPSK.* In mode 3 the HSP3824 receiver looks at the signal field to determine whether it needs to switch from DBPSK demodulation into DQPSK demodulation at the end of the always DBPSK preamble and header fields." Harris 4064.4 at 15. "Mode 3 - In this mode the preamble is programmable up to 256 bits (all 1's). The header in this mode is using all available fields. *In mode 3 the signal field defines the modulation type of the data packet (DBPSK* or *DQPSK*) so the receiver does not need to be preprogrammed to anticipate

[43] *See supra* n.38.

'228 Patent Claim 21	SNQ-3: Combined Disclosure of Snell in View of Harris 4064.4, the Admitted Prior Art, Upender, Yamano, and Kamerman
	one or the other. In this mode the device checks the Signal field for the data packet modulation and it switches to DQPSK if it is defined as such in the signal field. *Note that the preamble and header are always DBPSK* the modulation definition applies only for the data packet." Harris 4064.4 at 16. *See also, e.g.*, Harris 4064.4 at 14 ("The HSP3824 transmitter is designed as a Direct Sequence Spread Spectrum *DBPSK/DQPSK* modulator."), Harris 4064.4 at 14 ("The modulator is capable of switching rate automatically in the case where the preamble and header information are DBPSK modulated, and the data is *DQPSK* modulated."), Harris 4064.4 at FIGURE 10. **Kamerman[44] discloses transmitting a first message including second information modulated at a first modulation method and transmitting a second message including fourth information modulated at a second modulation method. *See, e.g.*, Kamerman at 6, 11, 12.** For example, Kamerman discloses an automatic rate selection scheme for falling forward from a "first modulation method" (*e.g.*, BPSK) corresponding to a lower data rate (*e.g.*, 1 Mbit/s) to a "second modulation method" (*e.g.*, QPSK) corresponding to a higher data rate (*e.g.*, 2 Mbit/s) after a number of successive correctly acknowledge packet transmissions, for instance, where there is a low load in neighbor cells and a reliable connection. "Then there is looked to *automatic rate control* to keep the cochannel interference at a tolerable level." Kamerman at 6. "IEEE 802.11 DS specifies bit rates of 1 and 2 Mbps. The allowable SNR and CSIR values for reliable transmission of data packets are dependent on the bit rate." Kamerman at 11. "IEEE 802.11 DS specifies BPSK and QPSK, in addition there could be applied proprietary modes with M-PSK and QAM schemes that provide higher bit rates by encoding more bits per symbol. . . . An automatic rate selection scheme based on the reliability of the individual uplink and

[44] As explained in Section III.E, a POSITA would have been motivated and found it obvious and straightforward to use Kamerman's teaching of transmitting a first data packet where the data is modulated using a first modulation method and next transmitting a second data packet where the data is modulated using a second modulation method in implementing Snell's system for communicating data packets modulated according to different modulation methods (as implemented using the teachings of Harris 4064.4, the Admitted Prior Art, and Yamano).

'228 Patent Claim 21	SNQ-3: Combined Disclosure of Snell in View of Harris 4064.4, the Admitted Prior Art, Upender, Yamano, and Kamerman
	downlink could be applied. The basic rate adaptation scheme could be: after unacknowledged packet transmissions the rate falls back, and *after a number (e.g. 10) of successive correctly acknowledged packet transmissions the bit rate goes up*." Kamerman at 11. "*At lower load in the neighbor cells the highest bit rate can be used more often.* At higher load the transmissions from the accesspoint to stations at the outer part of the cells, will be done often at fallback rates due to mutilation of transmissions by interference. In practice the network load for LANs at nowadays client-server applications is very bursty, with sometimes transmission bursts over an individual links and low activity during the major part of the time. *Therefore the higher bit rate can be used during the most of the time, and at high load in the neighbor cells (as will evoked by test applications) there will be switched to fall back rates in the outer part of the cell.*" Kamerman at 11. "The application of proprietary bit rates of 3 and 4 Mbps in addition to the basic 1 and 2 Mbps, can be combined with an automatic rate selection. This automatic rate selection gives *fall forward at reliable connections* and fall back at strong cochannel interference." Kamerman at 12.
[1.E] second message address information that is indicative of the single slave transceiver being an intended destination of the fourth information; and	**Snell in view of Yamano discloses that the second message comprises second message address information that is indicative of the single slave transceiver being an intended destination of the fourth information. *See, e.g.*, Snell at 1:55-57, 2:61-63, 6:35-36, 6:64-66, 7:5-14, Fig. 3; Harris 4064.4 at 14; Yamano at 19:63-64, 20:1-7, 20:54-59, Fig. 8.** For example, Snell discloses transmitting a "second message" including a PLCP preamble and PLCP header, and MPDU data, as shown in Figure 3 below.

'228 Patent Claim 21	SNQ-3: Combined Disclosure of Snell in View of Harris 4064.4, the Admitted Prior Art, Upender, Yamano, and Kamerman
	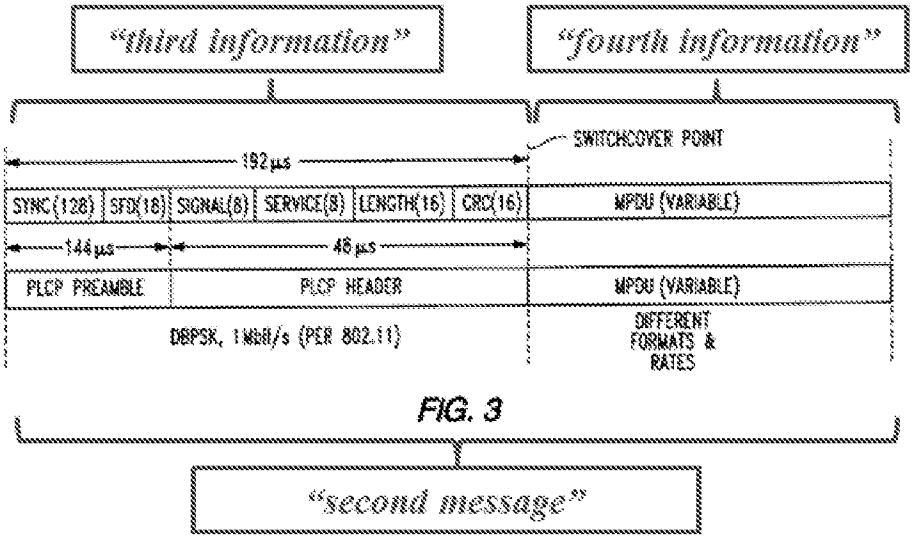 Snell at Fig. 3 (annotated). "The modulator may also preferably include header modulator means for modulating *data packets*." Snell at 2:61-63. "The PRISM 1 chip set provides all the functions necessary for full or half duplex, direct sequence spread spectrum, *packet communications* at the 2.4 to 2.5 GHz ISM radio band." Snell at 1:55-57. "The *header* may always be BPSK." Snell at 6:35-36. "The *PLCP preamble and PLCP header* are always at 1 Mbit/s, Diff encoded, scrambled and spread with an 11 chip barker." Snell at 6:64-66. "*MPDU* is serially provided by Interface 80 and *is the variable data* scrambled for normal operation. The reference phase for the first symbol of the MPDU is the output phase of the last symbol of the header for Diff Encoding. The last symbol of the header into the scrambler 51 must be followed by the first bit of the MPDU. *The variable data* may be modulated and demodulated in different formats than the header portion to thereby increase the data rate, and while a switchover as indicated by the switchover point in FIG. 3, occurs on-the-fly." Snell at 7:5-14. Snell incorporates by reference Harris 4064.4,[45] which discloses: "The *preamble and header* are always transmitted as DBPSK waveforms

[45] *See supra* n.35.

'228 Patent Claim 21	SNQ-3: Combined Disclosure of Snell in View of Harris 4064.4, the Admitted Prior Art, Upender, Yamano, and Kamerman
	while the *data packets* can be configured to be either DBPSK or DQPSK." Harris 4064.4 at 14. **Yamano[46] discloses that the second message comprises second message address information that is indicative of the single slave transceiver being an intended destination of the fourth information. *See, e.g.*, Yamano at 19:63-64, 20:1-7, 20:54-59, Fig. 8.** For example, Yamano discloses that a packet includes a preamble and main body, and that the preamble can include a destination address. "*Packet 700* includes a *preamble 701* and a *main body 702*." Yamano at 19:63-64. "For example, *preamble 701* can include information which identifies: (1) a version or type field for the preamble, (2) *packet source and destination addresses*, (3) the line code (i.e., the modem protocol being used), (4) the data rate, (5) error control parameters, (6) packet length and (7) a timing value for the expected reception slot of a subsequent packet." Yamano at 20:1-7 (emphasis added). 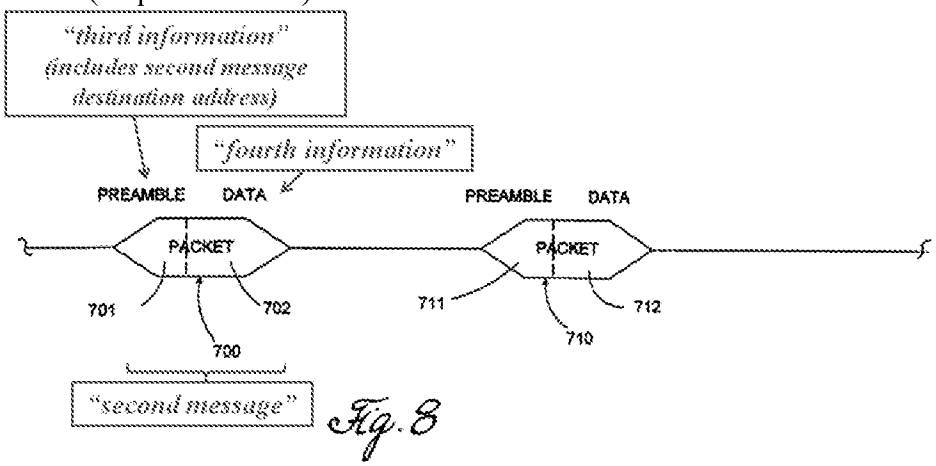 Yamano at Figure 8 (annotated). "When the preamble in a burst-mode packet *includes the destination address of the packet*, the receiver circuits can monitor the destination address of the packet, and in response, filter packets which do not need to be demodulated, thereby reducing the processing requirements of the

[46] As explained in Section III.E, a POSITA would have been motivated and found it obvious and straightforward to use Yamano's teaching of including a destination address in the preamble portion of a data packet in implementing Snell's data packet comprising preamble, header, and MPDU data portions (as implemented in light of Harris 4064.4 and the Admitted Prior Art).

'228 Patent Claim 21	SNQ-3: Combined Disclosure of Snell in View of Harris 4064.4, the Admitted Prior Art, Upender, Yamano, and Kamerman
	receiver circuits." Yamano at 20:54-59.
[1.F] wherein the second modulation method results in a higher data rate than the first modulation method.	**Snell discloses that the second modulation method results in a higher data rate than the first modulation method. *See, e.g.*, Snell at 5:31-33, 6:52-59, 6:64-66, 7:1-2, 7:5-14, Fig. 3; Harris 4064.4 at 16 (Table 7).** For example, Snell discloses that the second modulation method (*e.g.*, QPSK, or alternatively, DQPSK) results in a higher data rate (*e.g.*, 2 Mbit/s) than the first modulation method (*e.g.*, BPSK, or alternatively, DBPSK) which results in a data rate of 1 Mbit/s. "The present invention provides an extension of the PRISM 1 product from *1 Mbit/s BPSK and 2 Mbit/s QPSK* to 5.5 Mbit/s BPSK and 11 Mbit/s QPSK." Snell at 5:31-33 "*The PLCP preamble and PLCP header are* always at *1 Mbit/s*, Diff encoded, scrambled and spread with an 11 chip barker." Snell at 6:64-66. "Now relating to the PLCP header 91, the SIGNAL is: 0Ah — 1 Mbit/s BPSK, 14h — 2 Mbit/S QPSK, 37h — 5.5 Mbit/s BPSK, and 6Eh — 11 Mbit/s QPSK. " Snell at 6:52-59. "SIGNAL is indicated by 2 control bits and then formatted as described." Snell at 7:1-2. "MPDU is serially provided by Interface 80 and is the variable data scrambled for normal operation. The reference phase for the first symbol of the MPDU is the output phase of the last symbol of the header for Diff Encoding. The last symbol of the header into the scrambler 51 must be followed by the first bit of the MPDU. The variable data may be modulated and demodulated in different formats than the header portion to thereby increase the data rate, and while a switchover as indicated by the switchover point in FIG. 3, occurs on-the-fly." Snell at 7:5-14. *See also, e.g.*, Snell at Fig. 3; Harris 4064.4[47] at 16 (Table 7).
21. The master communication	**Snell in view of Yamano discloses that the first information that is included in the first message comprises the first message address**

[47] *See supra* n.35.

Rembrandt Wireless
Ex. 2012
Apple Inc. v. Rembrandt Wireless Technologies, LP, IPR2020-00033
Page 937

'228 Patent Claim 21	SNQ-3: Combined Disclosure of Snell in View of Harris 4064.4, the Admitted Prior Art, Upender, Yamano, and Kamerman
device as in claim 1, wherein the first information that is included in the first message comprises the first message address data.	**data.** *See* claim 1, Element 1.C.

Rembrandt Wireless
Ex. 2012
Apple Inc. v. Rembrandt Wireless Technologies, LP, IPR2020-00033
Page 938

IV. CONCLUSION

For at least the reasons set forth above, substantial new questions of patentability are raised concerning claim 21 of the '228 patent. Indeed, in view of the references discussed in this Request, the claims at issue are invalid as obvious. It is therefore respectfully submitted that this Request for reexamination of the '228 patent be granted and claim 21 be found invalid. If there are any questions, Requesters may be contacted at the below-listed telephone number.

As identified in the attached Certificate of Service and in accordance with 37 C.F.R. §§ 1.33(c) and 1.510(b)(5), a copy of the present Request, in its entirety, is being served to the address of the attorney or agent of record reflected in the publicly available records of the United States Patent and Trademark Office as designated in the Office's Patent Application Information Retrieval system.

The Commissioner is hereby authorized to charge Deposit Account 18-1945 under Order No. 110797-0019-502 the *Ex Parte* Reexamination fee of $12,000 under 37 C.F.R. § 1.20(c)(1). Requesters believe no other fee is due with this submission, however the Commissioner is hereby authorized to charge any fee deficiency or credit any over-payment to Deposit Account 18-1945.

Please direct all correspondence in this matter to the undersigned.

Dated: September 12, 2016

Respectfully submitted,

/J. Steven Baughman/
J. Steven Baughman
Registration No. 47,414
Customer No. 28120
ROPES & GRAY LLP
IPRM – Floor 43
Prudential Tower
800 Boylston Street
Boston, Massachusetts 02199-3600
(202) 508-4606
(202) 383-8371 (Fax)

Attorneys for Requesters
Samsung Electronics Co., Ltd. and Samsung Electronics America, Inc.

Rembrandt Wireless
Ex. 2012
Apple Inc. v. Rembrandt Wireless Technologies, LP, IPR2020-00033
Page 940

IN THE UNITED STATES PATENT AND TRADEMARK OFFICE

Inventor: Gordon F. Bremer	§	Attorney Docket No.: 110797-0019-502
U.S. Patent No. 8,457,228	§	Customer No.: 28120
Formerly Application No. 13/198,568	§	
Issue Date: June 4, 2013	§	Requesters: Samsung Electronics Co., Ltd.,
Filing Date: August 4, 2011	§	Samsung Electronics America, Inc.
Former Group Art Unit: 2633	§	
Former Examiner: Dac V. Ha	§	

For: SYSTEM AND METHOD OF COMMUNICATION USING AT LEAST TWO MODULATION METHODS

MAIL STOP *EX PARTE* REEXAM
Central Reexamination Unit
Office of Patent Legal Administration
Commissioner for Patents
P.O. Box 1450
Alexandria, VA 22313-1450

CERTIFICATE OF SERVICE

It is certified that, pursuant to 37 C.F.R. §1.510(b)(5), copies of the following documents have been served in their entireties on the patent owner at the correspondence address of record as provided for in 37 C.F.R. §1.33(c):

1. Request for Ex Parte Reexamination of U.S. Patent No. 8,457,228 Transmittal Form, PTO/SB/57.

2. Request for Ex Parte Reexamination of U.S. Patent No. 8,457,228 Pursuant to 35 U.S.C. § 302 and 37 C.F.R. § 1.510 and accompanying exhibits:

Exhibit A: U.S. Patent No. 8,457,228

Exhibit B: U.S. Application No. 13/198,568

Exhibit C: File History of U.S. Patent No. 8,457,228

Exhibit D: U.S. Patent No. 5,982,807

Exhibit E: Andren, C. et al., *Using the PRISM™ Chip Set for Low Data Rate Applications*, Harris Semiconductor Application Note No. AN9614, March 1996

Exhibit F: *HSP3824 Direct Sequence Spread Spectrum Baseband Processor*, Harris Semiconductor File No. 4064.4, Oct. 1996

Exhibit G: Declaration of Jon Mears; Exhibit A thereto (Upender et al., "Communication Protocols for Embedded Systems," *Embedded Systems Programming*, Vol. 7, Issue 11, November 1994.

Exhibit H: U.S. Patent No. 6,075,814

Exhibit I: Kamerman, A., *Throughput Density Constraints for Wireless LANs Based on DSSS*, IEEE 4th International Symposium on Spread Spectrum Techniques and Applications Proceedings, Mainz, Germany, Sept. 22-25, 1996, pp. 1344-1350 vol.3

Exhibit J: Office Action in File History of U.S. Application No. 09/205,205 (issued as U.S. Patent No. 6,614,838), mailed June 28, 2001

Exhibit K: Applicant Response in File History of U.S. Application No. 09/205,205 (issued as U.S. Patent No. 6,614,838), dated Oct. 1, 2001

Exhibit L: File History of U.S. Patent No. 5,982,807 (other than the prior art of record)

Exhibit M: Applicant Response in File History of U.S. Application No. 12/543,910 (issued as U.S. Patent No. 8,023,580), dated Mar. 1, 2011 ("3/1/2011 Reply in '580 Patent")

3. Information Disclosure Statement, PTO/SB/08, listing references cited in the Request for Ex Parte Reexamination of U.S. Patent No. 8,457,228 pursuant to 35 U.S.C. § 302 and 37 C.F.R. § 1.510.

The copy has been served on September 12, 2016 by causing the aforementioned documents to be deposited in the United States Postal Service as first class mail postage pre-paid in an envelope address to:

Condo Roccia Koptiw LLP
1800 JFK Boulevard, Suite 1700
Philadelphia, PA 19103

/Ginny Blundell/
Ginny Blundell

ROPES & GRAY LLP

PTO/SB/08a (07-09)
Approved for use through 07/31/2012. OMB 0651-0031
U.S. Patent and Trademark Office; U.S. DEPARTMENT OF COMMERCE
Under the Paperwork Reduction Act of 1995, no persons are required to respond to a collection of information unless it contains a valid OMB control number.

Substitute for form 1449/PTO

INFORMATION DISCLOSURE STATEMENT BY APPLICANT

(Use as many sheets as necessary)

Sheet	1	of	2

Complete if Known	
Application Number	RE of Patent No. 8,457,228
Issue Date	June 4, 2013
First Named Inventor	Gordon F. Bremer
Art Unit	2633
Examiner Name	Dac V. Ha
Attorney Docket Number	110797-0019-502

U.S. PATENT DOCUMENTS

Examiner Initials*	Cite No.[1]	Document Number Number-Kind Code[2] (if known)	Publication Date MM-DD-YYYY	Name of Patentee or Applicant of Cited Document	Pages, Columns, Lines, Where Relevant Passages or Relevant Figures Appear
	Ex. D	US-5,982,807	11-09-1999	Snell	
	Ex. H	US-6,075,814	06-13-2000	Yamano et al.	

FOREIGN PATENT DOCUMENTS

Examiner Initials*	Cite No.[1]	Foreign Patent Document Country Code[3]-Number[4]-Kind Code[5] (if known)	Publication Date MM-DD-YYYY	Name of Patentee or Applicant of Cited Document	Pages, Columns, Lines, Where Relevant Passages Or Relevant Figures Appear	T[6]

Examiner Signature		Date Considered	

*EXAMINER: Initial if reference considered, whether or not citation is in conformance with MPEP 609. Draw line through citation if not in conformance and not considered. Include copy of this form with next communication to applicant. [1] Applicant's unique citation designation number (optional). [2] See Kinds Codes of USPTO Patent Documents at www.uspto.gov or MPEP 901.04. [3] Enter Office that issued the document, by the two-letter code (WIPO Standard ST.3). [4] For Japanese patent documents, the indication of the year of the reign of the Emperor must precede the serial number of the patent document. [5] Kind of document by the appropriate symbols as indicated on the document under WIPO Standard ST.16 if possible. [6] Applicant is to place a check mark here if English language Translation is attached.

PTO/SB/08b (07-09)
Approved for use through 07/31/2012. OMB 0651-0031
U.S. Patent and Trademark Office; U.S. DEPARTMENT OF COMMERCE
Under the Paperwork Reduction Act of 1995, no persons are required to respond to a collection of information unless it contains a valid OMB control number.

Substitute for form 1449/PTO

INFORMATION DISCLOSURE STATEMENT BY APPLICANT

(Use as many sheets as necessary)

Sheet	2		2

Complete if Known	
Application Number	RE of Patent No. 8,457,228
Issue Date	June 4, 2013
First Named Inventor	Gordon F. Bremer
Art Unit	2633
Examiner Name	Dac V. Ha
Attorney Docket Number	110797-0019-502

NON PATENT LITERATURE DOCUMENTS

Examiner Initials*	Cite No.[1]	Include name of the author (in CAPITAL LETTERS), title of the article (when appropriate), title of the item (book, magazine, journal, serial, symposium, catalog, etc.), date, page(s), volume-issue number(s), publisher, city and/or country where published.	T[2]
	Ex. E	Andren and Fakatselis, "Using the PRISM™ Chip Set for Low Data Rate Applications," Harris Semiconductor Application Note 9614 (March 1996), pp. 1-3.	
	Ex. F	Harris Semiconductor – "HSP3824, Direct Sequence Spread Spectrum Baseband Processor," Harris Semiconductor File Number 4064.4 (October 1996), pp. 1-40.	
	Ex. G	Declaration of Jon Mears, Exhibit A thereto (Upender et al., "Communication Protocols for Embedded Systems," *Embedded Systems* Programming, Vol. 7, Issue 11, November 1994), pp. 1-12.	
	Ex. I	Kamerman, A., "Throughput Density Constraints for Wireless LANs Based on DSSS", *Spread Spectrum Techniques and Applications Proceedings, IEEE 4th International Symposium on*, Mainz, Germany, Sept. 22-25, 1996, pp. 1344-1350 vol.3	

Examiner Signature		Date Considered	

*EXAMINER: Initial if reference considered, whether or not citation is in conformance with MPEP 609. Draw line through citation if not in conformance and not considered. Include copy of this form with next communication to applicant.

[1]Applicant's unique citation designation number (optional). [2]Applicant is to place a check mark here if English language Translation is attached.

UNITED STATES PATENT AND TRADEMARK OFFICE

UNITED STATES DEPARTMENT OF COMMERCE
United States Patent and Trademark Office
Address: COMMISSIONER FOR PATENTS
P.O. Box 1450
Alexandria, Virginia 22313-1450
www.uspto.gov

BIB DATA SHEET

CONFIRMATION NO. 7821

SERIAL NUMBER	FILING or 371(c) DATE	CLASS	GROUP ART UNIT	ATTORNEY DOCKET NO.
90/013,809	09/12/2016 RULE	375	3992	110797-0019-502

APPLICANTS

INVENTORS

8457228, Residence Not Provided;
REMBRANDT WIRELESS TECHNOLOGIES, LP, ARLINGTON, VA;
SAMSUNG ELECTRONICS CO., LTD. (3RD PTY REQ.), GYEONGGI-DO, KOREA, REPUBLIC OF;
SAMSUNG ELECTRONICS AMERICA, INC. (3RD PTY REQ.), RIDGEFIELD PARK, NJ;
ROPES & GRAY LLP PRUDENTIAL TOWER, BOSTON, MA

**** CONTINUING DATA ****************************

This application is a REX of 13/198,568 08/04/2011 PAT 8457228
which is a CON of 12/543,910 08/19/2009 PAT 8023580
which is a CON of 11/774,803 07/09/2007 PAT 7675965
which is a CON of 10/412,878 04/14/2003 PAT 7248626
which is a CIP of 09/205,205 12/04/1998 PAT 6614838
which claims benefit of 60/067,562 12/05/1997

**** FOREIGN APPLICATIONS ****************************

**** IF REQUIRED, FOREIGN FILING LICENSE GRANTED ****

Foreign Priority claimed ☐ Yes ☐ No 35 USC 119(a-d) conditions met ☐ Yes ☐ No Verified and Acknowledged _____ Examiner's Signature	☐ Met after Allowance _____ Initials	STATE OR COUNTRY	SHEETS DRAWINGS	TOTAL CLAIMS	INDEPENDENT CLAIMS
				52	3

ADDRESS

Condo Roccia Koptiw LLP
1800 JFK Boulevard
Suite 1700
Philadelphia, PA 19103
UNITED STATES

TITLE

SYSTEM AND METHOD OF COMMUNICATION USING AT LEAST TWO MODULATION METHODS

FILING FEE RECEIVED		
12000	FEES: Authority has been given in Paper No._____ to charge/credit DEPOSIT ACCOUNT No._____ for following:	☐ All Fees ☐ 1.16 Fees (Filing) ☐ 1.17 Fees (Processing Ext. of time) ☐ 1.18 Fees (Issue) ☐ Other _____ ☐ Credit

Patent Assignment Abstract of Title

Total Assignments: 1

Application #: 13198568 **Filing Dt:** 08/04/2011 **Patent #:** 8457228 **Issue Dt:** 06/04/2013

PCT #: NONE **Intl Reg #:** **Publication #:** US20120106604 **Pub Dt:** 05/03/2012

Inventor: Gordon F. Bremer

Title: System and Method of Communication Using at Least Two Modulation Methods

Assignment: 1

Reel/Frame: 027085 / 0636 **Received:** 10/19/2011 **Recorded:** 10/19/2011 **Mailed:** 10/19/2011 **Pages:** 4

Conveyance: ASSIGNMENT OF ASSIGNORS INTEREST (SEE DOCUMENT FOR DETAILS).

Assignor: SUMMIT TECHNOLOGY SYSTEMS, LP **Exec Dt:** 10/03/2011

Assignee: REMBRANDT WIRELESS TECHNOLOGIES, LP
1655 NORTH FORT MEYERS DRIVE
SUITE 700
ARLINGTON, VIRGINIA 22209

Correspondent: THOMAS, KAYDEN, HORSTEMEYER & RISLEY LLP
400 INTERSTATE NORTH PARKWAY SE
SUITE 1500
ATLANTA, GA 30339

Search Results as of: 09/13/2016 09:29 AM

If you have any comments or questions concerning the data displayed, contact PRD / Assignments at 571-272-3350. v.2.5
Web interface last modified: Aug 20, 2015 v.2.5

UNITED STATES PATENT AND TRADEMARK OFFICE

UNITED STATES DEPARTMENT OF COMMERCE
United States Patent and Trademark Office
Address: COMMISSIONER FOR PATENTS
P.O. Box 1450
Alexandria, Virginia 22313-1450
www.uspto.gov

REEXAM CONTROL NUMBER	FILING OR 371 (c) DATE	PATENT NUMBER
90/013,809	09/12/2016	8457228

CONFIRMATION NO. 7821

REEXAMINATION REQUEST NOTICE

ROPES & GRAY LLP PRUDENTIAL TOWER
IPRM DOCKETING - FLOOR 43
800 BOYLSTON STREET
BOSTON, MA 02199-3600

OC000000085773857

Date Mailed: 09/14/2016

NOTICE OF REEXAMINATION REQUEST FILING DATE

(Third Party Requester)

Requester is hereby notified that the filing date of the request for reexamination is 09/12/2016, the date that the filing requirements of 37 CFR § 1.510 were received.

A decision on the request for reexamination will be mailed within three months from the filing date of the request for reexamination. (See 37 CFR 1.515(a)).

A copy of the Notice is being sent to the person identified by the requester as the patent owner. Further patent owner correspondence will be the latest attorney or agent of record in the patent file. (See 37 CFR 1.33). Any paper filed should include a reference to the present request for reexamination (by Reexamination Control Number).

cc: Patent Owner
15027
Condo Roccia Koptiw LLP
1800 JFK Boulevard
Suite 1700
Philadelphia, PA 19103

/rbell/

Legal Instruments Examiner
Central Reexamination Unit 571-272-7705; FAX No. 571-273-9900

Rembrandt Wireless
Ex. 2012
Apple Inc. v. Rembrandt Wireless Technologies, LP, IPR2020-00033
Page 948

IPR2020-00036 Page 00948

UNITED STATES PATENT AND TRADEMARK OFFICE

UNITED STATES DEPARTMENT OF COMMERCE
United States Patent and Trademark Office
Address: COMMISSIONER FOR PATENTS
P.O. Box 1450
Alexandria, Virginia 22313-1450
www.uspto.gov

REEXAM CONTROL NUMBER	FILING OR 371 (c) DATE	PATENT NUMBER
90/013,809	09/12/2016	8457228

CONFIRMATION NO. 7821

REEXAM ASSIGNMENT NOTICE

OC000000085773859

15027
Condo Roccia Koptiw LLP
1800 JFK Boulevard
Suite 1700
Philadelphia, PA 19103

Date Mailed: 09/14/2016

NOTICE OF ASSIGNMENT OF REEXAMINATION REQUEST

The above-identified request for reexamination has been assigned to Art Unit 3992. All future correspondence to the proceeding should be identified by the control number listed above and directed to the assigned Art Unit.

A copy of this Notice is being sent to the latest attorney or agent of record in the patent file or to all owners of record. (See 37 CFR 1.33(c)). If the addressee is not, or does not represent, the current owner, he or she is required to forward all communications regarding this proceeding to the current owner(s). An attorney or agent receiving this communication who does not represent the current owner(s) may wish to seek to withdraw pursuant to 37 CFR 1.36 in order to avoid receiving future communications. If the address of the current owner(s) is unknown, this communication should be returned within the request to withdraw pursuant to Section 1.36.

NOTICE OF USPTO EX PARTE REEXAMINATION PATENT OWNER STATEMENT WAIVER PROGRAM

The USPTO has implemented a pilot program where, after a reexamination proceeding has been granted a filing date and before the examiner begins his or her review, the patent owner may orally waive the right to file a patent owner's statement. See *"Pilot Program for Waiver of Patent Owner's Statement in Ex Parte Reexamination Proceedings,"* 75 FR 47269 (August 5, 2010). One goal of the pilot program is to reduce the pendency of reexamination proceedings and improve the efficiency of the reexamination process.

Ordinarily when ex parte reexamination is ordered, the USPTO must wait until after the receipt of the patent owner's statement and the third party requester's reply, or after the expiration of the time period for filing the statement and reply (a period that can be as long as 5 to 6 months), before mailing a first determination of patentability. The USPTO's first determination of patentability is usually a first Office action on the merits or a Notice of Intent to Issue Reexamination Certificate (NIRC).

Under the pilot program, the patent owner's oral waiver allows the USPTO to act on the first determination of patentability immediately after determining that reexamination will be ordered, and in a suitable case issue the reexamination order and the first determination of patentability (which could be a NIRC if the claims under reexamination are confirmed) at the same time.

Benefits to the Patent Owner for participating in this pilot program include reduction in pendency.

To participate in this pilot program, Patent Owners may contact the USPTO's Central Reexamination Unit (CRU) at 571-272-7705. The USPTO will make the oral waiver of record in the reexamination file in an interview summary and a copy will be mailed to the patent owner and any third party requester.

cc: Third Party Requester(if any)
ROPES & GRAY LLP PRUDENTIAL TOWER
IPRM DOCKETING - FLOOR 43
800 BOYLSTON STREET
BOSTON, MA 02199-3600

/rbell/

Legal Instruments Examiner
Central Reexamination Unit 571-272-7705; FAX No. 571-273-9900

Litigation Search Report CRU 3999

Ex Parte Reexamination: 90/013,809

TO: Scott Weaver Location: CRU Art Unit: 3992 Date: 9/15/2016	From: Paralegal Name Location: CRU 3999 MDE 4B21 Phone: (571) 272-6825 patricia.volpe@uspto.gov

Search Notes

Litigation search for U.S. Patent Number: **8,457,228**

OPEN - Samsung Electronics Co. Ltd. Vs. Rembrandt Wireless Technologies, LP	IPR2015-00555
OPEN - Samsung Electronics Co. Ltd. Vs. Rembrandt Wireless Technologies, LP	IPR2014-00889
OPEN - Samsung Electronics Co. Ltd. Vs. Rembrandt Wireless Technologies, LP	IPR2014-00890
OPEN - Samsung Electronics Co. Ltd. Vs. Rembrandt Wireless Technologies, LP	IPR2014-00891
CLOSED - Samsung Electronics Co. Ltd. Vs. Rembrandt Wireless Technologies, LP	IPR2014-00892
CLOSED - Samsung Electronics Co. Ltd. Vs. Rembrandt Wireless Technologies, LP	IPR2014-00893
CLOSED - Samsung Electronics Co. Ltd. Vs. Rembrandt Wireless Technologies, LP	IPR2014-00895

1) I performed a KeyCite Search in Westlaw, which retrieves all history on the patent including any litigation.

2) I performed a search on the patent in Lexis CourtLink for any open dockets or closed cases.

3) I performed a search in Lexis in the Federal Courts and Administrative Materials databases for any cases found.

4) I performed a search in Lexis in the IP Journal and Periodicals database for any articles on the patent.

5) I performed a search in Lexis in the news databases for any articles about the patent or any articles about litigation on this patent.

United States Patent Trial and Appeals Board

US Patent Trial and Appeals Board - Alexandria
(Alexandria)

IPR2015-00555

Samsung Electronics Co. Ltd. Vs. Rembrandt Wireless Technologies, LP

This case was retrieved from the court on Friday, January 08, 2016

Header

Case Number:	IPR2015-00555
Date Filed:	01/09/2015
Date Full Case Retrieved:	01/08/2016
Status:	Open
Misc:	Civil

[Summary][Participants][Proceedings]

Summary

Court Case Status:	Not Instituted
Case Type:	IPR: Inter partes review
Date of Decision to Institute Case:	6/19/2015
Technical Center Number:	2600
Patent Application Number:	13198568
Patent Number:	8457228

Participants

Litigants

Samsung Electronics Co. Ltd.
Petitioner

Rembrandt Wireless Technologies, LP
PatentOwner

Proceedings

File Date	Details	Document Type	Paper/Exhibit No.	Filed By	Public?
01/09/2015	Petition for Inter Partes Review of U.S. Patent No. 8,457,228	Petition	1	Petitioner	Yes
01/09/2015	Power of Attorney	Power of Attorney	2	Petitioner	Yes
01/09/2015		Motion	3	Petitioner	Yes

	Motion for Joinder to IPR2014-00892				
01/09/2015	U.S. Patent No. 8,457,228	Exhibit	1301	Petitioner	Yes
01/09/2015	Complaint	Exhibit	1302	Petitioner	Yes
01/09/2015	Amended Complaint	Exhibit	1303	Petitioner	Yes
01/09/2015	U.S. Patent No. 5,706,428 (Boer)	Exhibit	1304	Petitioner	Yes
01/09/2015	U.S. Patent No. 6,614,838	Exhibit	1305	Petitioner	Yes
01/09/2015	'838 June 28, 2001 Office Action Summary	Exhibit	1306	Petitioner	Yes
01/09/2015	Oct. 1, 2001 Response	Exhibit	1307	Petitioner	Yes
01/09/2015	'228 Application (as filed)	Exhibit	1308	Petitioner	Yes
01/09/2015	'228 April 30, 2012 Office Action Summary	Exhibit	1309	Petitioner	Yes
01/09/2015	October 19, 2012 Response to Office Action	Exhibit	1310	Petitioner	Yes
01/09/2015	'228 Notice of Allowance and Fees	Exhibit	1311	Petitioner	Yes
01/09/2015	'228 Request for Continued Examination	Exhibit	1312	Petitioner	Yes
01/09/2015	'228 Second Notice of Allowance and Fees	Exhibit	1313	Petitioner	Yes
01/09/2015	Infringement Contentions	Exhibit	1314	Petitioner	Yes
01/09/2015	Rembrandt's Markman Brief	Exhibit	1315	Petitioner	Yes
01/09/2015	'580 Application (as filed)	Exhibit	1316	Petitioner	Yes
01/09/2015	'580 Office Action Summary	Exhibit	1317	Petitioner	Yes
01/09/2015	'580 March 1, 2011 Reply	Exhibit	1318	Petitioner	Yes
01/09/2015	Rembrandt Tutorial Reference	Exhibit	1319	Petitioner	Yes
01/09/2015	IEEE Dictionary	Exhibit	1320	Petitioner	Yes
01/09/2015	Communications Dictionary	Exhibit	1321	Petitioner	Yes
01/09/2015	Mears Declaration and Upender	Exhibit	1322	Petitioner	Yes
01/09/2015	Goodman Declaration (Case IPR2014-00892)	Exhibit	1323	Petitioner	Yes
01/09/2015	U.S. Patent No. 5,537,398 (Siwiak)	Exhibit	1324	Petitioner	Yes
01/09/2015	Goodman Supplemental Declaration	Exhibit	1325	Petitioner	Yes
01/12/2015	Supplemental Mandatory Notice	Notice	4	Petitioner	Yes
01/29/2015	Notice of Filing Date Accorded	Notice of Filing Date Accorded to Petition	5	Board	Yes
01/30/2015	Power of Attorney	Power of Attorney	6	Potential Patent Owner	Yes
01/30/2015	Related Matters	Notice	7	Potential Patent Owner	Yes
02/02/2015	Order - Conduct of the Proceeding - 37 CFR 42.5	Order	8	Board	Yes
02/16/2015	PO Opposition to Joinder	Opposition	9		Yes

				Patent Owner	
02/16/2015	Ex. 2001 - Defs' Invalidity Contentions	Exhibit	2001	Patent Owner	Yes
02/16/2015	Ex. 2002 - Trial Transcript	Exhibit	2002	Patent Owner	Yes
02/26/2015	Petitioner's Reply to Opposition to Motion for Joinder	Reply	10	Petitioner	Yes
03/02/2015	Power of Attorney	Power of Attorney	11	Petitioner	Yes
03/20/2015	Petitioners_ Motion to Withdraw As Counsel (IPR2015-00555)	Motion	12	Petitioner	Yes
03/20/2015	Petitioners_ Motion to Change Designation of Lead Counsel (IPR2015-00555)	Motion	13	Petitioner	Yes
03/20/2015	Power of Attorney	Power of Attorney	14	Petitioner	Yes
03/25/2015	Petitioner's Unopposed Motion for Pro Hac Vice Admission of Brian P. Biddinger	Motion	15	Petitioner	Yes
03/27/2015	Order - re Petitioner's Motion to Withdraw Counsel	Order	16	Board	Yes
03/27/2015	DECISION - Petitioner's Motion for Pro Hac Vice Admission of Mr. Biddinger	Notice	17	Board	Yes
04/07/2015	Petitioners' Supplemental Mandatory Notice	Notice	18	Petitioner	Yes
04/29/2015	Patent Owner's Preliminary Response	Preliminary Response	19	Patent Owner	Yes
04/29/2015	Ex. 2003 - D. Ct. Claim Construction	Exhibit	2003	Patent Owner	Yes
04/29/2015	Ex. 2004 - Comp. Dict. of E.E.	Exhibit	2004	Patent Owner	Yes
04/29/2015	Ex. 2005 - Mod. Dict. of Elec.	Exhibit	2005	Patent Owner	Yes
04/29/2015	Ex. 2006 - Proakis I	Exhibit	2006	Patent Owner	Yes
04/29/2015	Ex. 2007 - Proakis II	Exhibit	2007	Patent Owner	Yes
04/29/2015	Ex. 2008 - Gast	Exhibit	2008	Patent Owner	Yes
06/19/2015	Decision Denial of Institution of Inter Partes Revew Denial of Motion for Joinder	Institution Decision	20	Board	Yes
06/29/2015	Petitioners' Request for Refund of Post-Institution Fees	Notice	21	Petitioner	Yes
06/30/2015	Notice of Refund	Notice	22	Board	Yes

Copyright © 2016 LexisNexis CourtLink, Inc. All rights reserved.
*** THIS DATA IS FOR INFORMATIONAL PURPOSES ONLY ***

United States Patent Trial and Appeals Board

US Patent Trial and Appeals Board - Alexandria
(Alexandria)

IPR2014-00889

Samsung Electronics Co. Ltd. Vs. Rembrandt Wireless Technologies, LP

This case was retrieved from the court on Wednesday, June 08, 2016

Header

Case Number:	IPR2014-00889
Date Filed:	06/04/2014
Date Full Case Retrieved:	06/08/2016
Status:	Open
Misc:	Civil

[Summary][Participants][Proceedings]

Summary

Court Case Status:	Not Instituted
Case Type:	IPR: Inter partes review
Date of Decision to Institute Case:	12/10/2014
Technical Center Number:	2600
Patent Application Number:	13198568
Patent Number:	8457228

Participants

Litigants

Samsung Electronics Co. Ltd.
Petitioner

Rembrandt Wireless Technologies, LP
PatentOwner

Proceedings

File Date	Details	Document Type	Paper/Exhibit No.	Filed By	Public?
06/04/2014	Power of Attorney	Power of Attorney	1	Petitioner	Yes
06/04/2014	Petition for Inter Partes Review of U.S. Patent No. 8,457,228	Petition	2	Petitioner	Yes
06/04/2014	Patent 8457228	Exhibit	1001	Petitioner	Yes

06/04/2014	Complaint	Exhibit	1002	Petitioner	Yes
06/04/2014	Amended Complaint	Exhibit	1003	Petitioner	Yes
06/04/2014	Draft 801.22 Std	Exhibit	1004	Petitioner	Yes
06/04/2014	802.11 Std	Exhibit	1005	Petitioner	Yes
06/04/2014	Boer US5706428	Exhibit	1006	Petitioner	Yes
06/04/2014	Patent 5,537,398 siwiak	Exhibit	1007	Petitioner	Yes
06/04/2014	Information Disclosure Statement	Exhibit	1008	Petitioner	Yes
06/04/2014	228 Application as Filed	Exhibit	1009	Petitioner	Yes
06/04/2014	228 4.30.2012 OA	Exhibit	1010	Petitioner	Yes
06/04/2014	10.19.2012 OA Response	Exhibit	1011	Petitioner	Yes
06/04/2014	First Notice of Allowance	Exhibit	1012	Petitioner	Yes
06/04/2014	Request for Continued Examination	Exhibit	1013	Petitioner	Yes
06/04/2014	2nd Notice of Allowance	Exhibit	1014	Petitioner	Yes
06/04/2014	Infringement Contentions	Exhibit	1015	Petitioner	Yes
06/04/2014	Rembrandt Markman Brief	Exhibit	1016	Petitioner	Yes
06/04/2014	580 App as Filed	Exhibit	1017	Petitioner	Yes
06/04/2014	580 Office Action Summary	Exhibit	1018	Petitioner	Yes
06/04/2014	580 3.1.2011 Reply	Exhibit	1019	Petitioner	Yes
06/04/2014	Rembrandt Tutorial Reference	Exhibit	1020	Petitioner	Yes
06/04/2014	IEEE Dictionary	Exhibit	1021	Petitioner	Yes
06/04/2014	Commuications Dictionary Master Slave	Exhibit	1022	Petitioner	Yes
06/04/2014	O'Hara Declaration	Exhibit	1023	Petitioner	Yes
06/04/2014	Goodman Declaration	Exhibit	1024	Petitioner	Yes
06/18/2014	Notice of Filing Date Accorded to Petition	Notice of Filing Date Accorded to Petition	3	Board	Yes
06/20/2014	Power of Attorney	Power of Attorney	4	Potential Patent Owner	Yes
06/20/2014	Related Matters	Notice	5	Potential Patent Owner	Yes
09/18/2014	PO Preliminary Response	Preliminary Response	6	Patent Owner	Yes
09/18/2014	Exhibit 2401	Exhibit	2401	Patent Owner	Yes
09/18/2014	Exhibit 2402	Exhibit	2402	Patent Owner	Yes
09/18/2014	Exhibit 2403	Exhibit	2403	Patent Owner	Yes
09/18/2014	Exhibit 2404	Exhibit	2404	Patent Owner	Yes
09/18/2014	Exhibit 2405	Exhibit	2405	Patent Owner	Yes
09/18/2014	Exhibit 2406	Exhibit	2406	Patent Owner	Yes
09/18/2014	Exhibit 2407	Exhibit	2407	Patent Owner	Yes

09/18/2014	Exhibit 2408	Exhibit	2408	Patent Owner	Yes
09/18/2014	Exhibit 2409	Exhibit	2409	Patent Owner	Yes
09/18/2014	Exhibit 2410	Exhibit	2410	Patent Owner	Yes
09/18/2014	Exhibit 2411	Exhibit	2411	Patent Owner	Yes
09/18/2014	Exhibit 2412	Exhibit	2412	Patent Owner	Yes
09/18/2014	Exhibit 2413	Exhibit	2413	Patent Owner	Yes
10/31/2014	Supplemental Mandatory Notice	Notice	7	Patent Owner	Yes
12/10/2014	Decision - Denying Institution of Inter Partes Review 37 C.F.R. 42.108	Institution Decision	8	Board	Yes
12/10/2014	Patent Owner's Supplemental Mandatory Notice Information Under 37 C.F.R. 42.8	Notice	9	Patent Owner	Yes
03/10/2015	IPR2014-00889 - Refund request	Refund Request	10	Petitioner	Yes
03/23/2015	Notice of Refund	Notice	11	Board	Yes

Copyright © 2016 LexisNexis CourtLink, Inc. All rights reserved.
*** THIS DATA IS FOR INFORMATIONAL PURPOSES ONLY ***

United States Patent Trial and Appeals Board

US Patent Trial and Appeals Board - Alexandria
(Alexandria)

IPR2014-00890

Samsung Electronics Co. Ltd. Vs. Rembrandt Wireless Technologies, LP

This case was retrieved from the court on Wednesday, June 08, 2016

Header

Case Number:	IPR2014-00890
Date Filed:	06/04/2014
Date Full Case Retrieved:	06/08/2016
Status:	Open
Misc:	Civil

[Summary][Participants][Proceedings]

Summary

Court Case Status:	Not Instituted
Case Type:	IPR: Inter partes review
Date of Decision to Institute Case:	12/10/2014
Technical Center Number:	2600
Patent Application Number:	13198568
Patent Number:	8457228

Participants

Litigants

Samsung Electronics Co. Ltd.
Petitioner

Rembrandt Wireless Technologies, LP
PatentOwner

Proceedings

File Date	Details	Document Type	Paper/Exhibit No.	Filed By	Public?
06/04/2014	Power of Attorney	Power of Attorney	1	Petitioner	Yes
06/04/2014	Petition for Inter Partes Review of U.S. Patent No. 8,457,228	Petition	2	Petitioner	Yes

06/04/2014	Patent 8,457,228	Exhibit	1101	Petitioner	Yes
06/04/2014	Complaint	Exhibit	1102	Petitioner	Yes
06/04/2014	Amended Complaint	Exhibit	1103	Petitioner	Yes
06/04/2014	Draft 802.11 Std	Exhibit	1104	Petitioner	Yes
06/04/2014	802.11 Std	Exhibit	1105	Petitioner	Yes
06/04/2014	Boer US5706428	Exhibit	1106	Petitioner	Yes
06/04/2014	Information Disclosure Statement	Exhibit	1107	Petitioner	Yes
06/04/2014	228 Application as Filed	Exhibit	1108	Petitioner	Yes
06/04/2014	228 4.30.2012 Office Action Summary	Exhibit	1109	Petitioner	Yes
06/04/2014	228 4.30.2012 Office Action Response	Exhibit	1110	Petitioner	Yes
06/04/2014	228 First Notice of Allowance and Fees Due	Exhibit	1111	Petitioner	Yes
06/04/2014	228 Request for Continued Examination/Transmittal	Exhibit	1112	Petitioner	Yes
06/04/2014	2nd Notice of Allowance and Fees Due	Exhibit	1113	Petitioner	Yes
06/04/2014	Infringement Contentions	Exhibit	1114	Petitioner	Yes
06/04/2014	Rembrandt Markman Brief	Exhibit	1115	Petitioner	Yes
06/04/2014	580 Application as Filed	Exhibit	1116	Petitioner	Yes
06/04/2014	580 Office Action Summary	Exhibit	1117	Petitioner	Yes
06/04/2014	580 3.1.2011 Reply	Exhibit	1118	Petitioner	Yes
06/04/2014	Rembrandt Tutorial Reference	Exhibit	1119	Petitioner	Yes
06/04/2014	IEEE Dictionary	Exhibit	1120	Petitioner	Yes
06/04/2014	Commuications Dictionary Master Slave	Exhibit	1121	Petitioner	Yes
06/04/2014	O'Hara Declaration	Exhibit	1122	Petitioner	Yes
06/04/2014	Goodman Declaration	Exhibit	1123	Petitioner	Yes
06/18/2014	Notice of Filing Date Accorded to Petition	Notice of Filing Date Accorded to Petition	3	Board	Yes
06/20/2014	Power of Attorney	Power of Attorney	4	Potential Patent Owner	Yes
06/20/2014	Related Matters	Notice	5	Potential Patent Owner	Yes
09/18/2014	PO Preliminary Response	Preliminary Response	6	Patent Owner	Yes
09/18/2014	Exhibit 2501	Exhibit	2501	Patent Owner	Yes
09/18/2014	Exhibit 2502	Exhibit	2502	Patent Owner	Yes
09/18/2014	Exhibit 2503	Exhibit	2503	Patent Owner	Yes
09/18/2014	Exhibit 2504	Exhibit	2504	Patent Owner	Yes
09/18/2014	Exhibit 2505	Exhibit	2505	Patent Owner	Yes
09/18/2014	Exhibit 2506	Exhibit	2506		Yes

				Patent Owner	
09/18/2014	Exhibit 2507	Exhibit	2507	Patent Owner	Yes
09/18/2014	Exhibit 2508	Exhibit	2508	Patent Owner	Yes
09/18/2014	Exhibit 2509	Exhibit	2509	Patent Owner	Yes
09/18/2014	Exhibit 2510	Exhibit	2510	Patent Owner	Yes
09/18/2014	Exhibit 2511	Exhibit	2511	Patent Owner	Yes
09/18/2014	Exhibit 2512	Exhibit	2512	Patent Owner	Yes
09/18/2014	Exhibit 2513	Exhibit	2513	Patent Owner	Yes
10/31/2014	Supplemental Mandatory Notice	Notice	7	Patent Owner	Yes
12/10/2014	Decision - Denying Institution of Inter Partes Review 37 C.F.R. 42.108	Institution Decision	8	Board	Yes
12/10/2014	Patent Owner's Supplemental Mandatory Notice Information Under 37 C.F.R. 42.8	Notice	9	Patent Owner	Yes
03/10/2015	IPR2014-00890 - Refund request	Refund Request	10	Petitioner	Yes
03/18/2015	Notice of Refund	Notice	11	Board	Yes

Copyright © 2016 LexisNexis CourtLink, Inc. All rights reserved.
*** THIS DATA IS FOR INFORMATIONAL PURPOSES ONLY ***

United States Patent Trial and Appeals Board

US Patent Trial and Appeals Board - Alexandria
(Alexandria)

IPR2014-00891

Samsung Electronics Co. Ltd. Vs. Rembrandt Wireless Technologies, LP

This case was retrieved from the court on Wednesday, June 08, 2016

Header

Case Number:	IPR2014-00891
Date Filed:	06/04/2014
Date Full Case Retrieved:	06/08/2016
Status:	Open
Misc:	Civil

[Summary][Participants][Proceedings]

Summary

Court Case Status:	Not Instituted
Case Type:	IPR: Inter partes review
Date of Decision to Institute Case:	12/10/2014
Technical Center Number:	2600
Patent Application Number:	13198568
Patent Number:	8457228

Participants

Litigants

Samsung Electronics Co. Ltd.
Petitioner

Rembrandt Wireless Technologies, LP
PatentOwner

Proceedings

File Date	Details	Document Type	Paper/Exhibit No.	Filed By	Public?
06/04/2014	Power of Attorney	Power of Attorney	1	Petitioner	Yes
06/04/2014	Petition for Inter Partes Review of U.S. Patent No. 8,457,228	Petition	2	Petitioner	Yes
06/04/2014	Patent 8,457,228	Exhibit	1201	Petitioner	Yes

06/04/2014	Complaint	Exhibit	1202	Petitioner	Yes
06/04/2014	Amended Complaint	Exhibit	1203	Petitioner	Yes
06/04/2014	Draft 802.11 Std	Exhibit	1204	Petitioner	Yes
06/04/2014	802.11 Std	Exhibit	1205	Petitioner	Yes
06/04/2014	Boer US5706428	Exhibit	1206	Petitioner	Yes
06/04/2014	Information Disclosure Statement	Exhibit	1207	Petitioner	Yes
06/04/2014	Patent No. 6614838	Exhibit	1208	Petitioner	Yes
06/04/2014	838 June 28 2001 Office Action Summary	Exhibit	1209	Petitioner	Yes
06/04/2014	Oct 1 2001 Response	Exhibit	1210	Petitioner	Yes
06/04/2014	228 Application as Filed	Exhibit	1211	Petitioner	Yes
06/04/2014	228 4.30.2012 Office Action Summary	Exhibit	1212	Petitioner	Yes
06/04/2014	228 10.19.2012 OA Response	Exhibit	1213	Petitioner	Yes
06/04/2014	228 1st Notice of Allowance and Fees	Exhibit	1214	Petitioner	Yes
06/04/2014	228 Request for Continued Examination Transmittal	Exhibit	1215	Petitioner	Yes
06/04/2014	228 2nd Notice of Allowance and Fees	Exhibit	1216	Petitioner	Yes
06/04/2014	Infringement Contentions	Exhibit	1217	Petitioner	Yes
06/04/2014	Rembrandt Markman Brief	Exhibit	1218	Petitioner	Yes
06/04/2014	580 Application as Filed	Exhibit	1219	Petitioner	Yes
06/04/2014	580 Office Action Summary	Exhibit	1220	Petitioner	Yes
06/04/2014	580 3.1.2011 Reply	Exhibit	1221	Petitioner	Yes
06/04/2014	Rembrandt Tutorial Reference	Exhibit	1222	Petitioner	Yes
06/04/2014	IEEE Dictionary	Exhibit	1223	Petitioner	Yes
06/04/2014	Commuications Dictionary Master Slave	Exhibit	1224	Petitioner	Yes
06/04/2014	O'Hara Declaration	Exhibit	1225	Petitioner	Yes
06/04/2014	Cafarella US5809060	Exhibit	1226	Petitioner	Yes
06/04/2014	Bialkowiski US5574910	Exhibit	1227	Petitioner	Yes
06/04/2014	Goodman Declaration	Exhibit	1228	Petitioner	Yes
06/18/2014	Notice of Filing Date Accorded to Petition	Notice of Filing Date Accorded to Petition	3	Board	Yes
06/20/2014	Power of Attorney	Power of Attorney	4	Potential Patent Owner	Yes
06/20/2014	Related Matters	Notice	5	Potential Patent Owner	Yes
09/18/2014	PO Preliminary Response	Preliminary Response	6	Patent Owner	Yes
09/18/2014	Exhibit 2601	Exhibit	2601	Patent Owner	Yes
09/18/2014	Exhibit 2602	Exhibit	2602	Patent Owner	Yes
09/18/2014	Exhibit 2603	Exhibit	2603	Patent Owner	Yes

09/18/2014	Exhibit 2604	Exhibit	2604	Patent Owner	Yes
09/18/2014	Exhibit 2605	Exhibit	2605	Patent Owner	Yes
09/18/2014	Exhibit 2606	Exhibit	2606	Patent Owner	Yes
09/18/2014	Exhibit 2607	Exhibit	2607	Patent Owner	Yes
09/18/2014	Exhibit 2608	Exhibit	2608	Patent Owner	Yes
09/18/2014	Exhibit 2609	Exhibit	2609	Patent Owner	Yes
09/18/2014	Exhibit 2610	Exhibit	2610	Patent Owner	Yes
09/18/2014	Exhibit 2611	Exhibit	2611	Patent Owner	Yes
09/18/2014	Exhibit 2612	Exhibit	2612	Patent Owner	Yes
09/18/2014	Exhibit 2613	Exhibit	2613	Patent Owner	Yes
10/31/2014	Supplemental Mandatory Notice	Notice	7	Patent Owner	Yes
12/10/2014	Decision - Denying Institution of Inter Partes Review 37 C.F.R. 42.108	Institution Decision	8	Board	Yes
12/10/2014	Patent Owner's Supplemental Mandatory Notice Information Under 37 C.F.R. 42.8	Notice	9	Patent Owner	Yes
03/10/2015	IPR2014-00891 - Refund request	Refund Request	10	Petitioner	Yes
03/19/2015	Notice of Refund	Notice	11	Board	Yes

Copyright © 2016 LexisNexis CourtLink, Inc. All rights reserved.
*** THIS DATA IS FOR INFORMATIONAL PURPOSES ONLY ***

United States Patent Trial and Appeals Board

US Patent Trial and Appeals Board - Alexandria
(Alexandria)

IPR2014-00892

Samsung Electronics Co. Ltd. Vs. Rembrandt Wireless Technologies, LP

This case was retrieved from the court on Wednesday, June 08, 2016

Header

Case Number:	IPR2014-00892
Date Filed:	06/04/2014
Date Full Case Retrieved:	06/08/2016
Status:	Closed
Misc:	Civil

[Summary][Participants][Proceedings]

Summary

Court Case Status:	Final Decision
Case Type:	IPR: Inter partes review
Date of Decision to Institute Case:	12/10/2014
Technical Center Number:	2600
Patent Application Number:	13198568
Patent Number:	8457228

Participants

Litigants

Samsung Electronics Co. Ltd.
Petitioner

Rembrandt Wireless Technologies, LP
PatentOwner

Proceedings

File Date	Details	Document Type	Paper/Exhibit No.	Filed By	Public?
06/04/2014	Power of Attorney	Power of Attorney	1	Petitioner	Yes
06/04/2014	Petition for Inter Partes Review of U.S. Patent No. 8,457,228	Petition	2	Petitioner	Yes

06/04/2014	Patent 8,457,228	Exhibit	1301	Petitioner	Yes
06/04/2014	Complaint	Exhibit	1302	Petitioner	Yes
06/04/2014	Amended Complaint	Exhibit	1303	Petitioner	Yes
06/04/2014	Boer US5706428	Exhibit	1304	Petitioner	Yes
06/04/2014	Patent No. US 6,614,838	Exhibit	1305	Petitioner	Yes
06/04/2014	838 June 28 2001 Office Action Summary	Exhibit	1306	Petitioner	Yes
06/04/2014	Oct 1 2001 Response	Exhibit	1307	Petitioner	Yes
06/04/2014	228 Application as Filed	Exhibit	1308	Petitioner	Yes
06/04/2014	228 4.30.2012 Office Action Summary	Exhibit	1309	Petitioner	Yes
06/04/2014	10.19.2012 OA Response	Exhibit	1310	Petitioner	Yes
06/04/2014	228 Notice of Allowance and Fees	Exhibit	1311	Petitioner	Yes
06/04/2014	Request for Continued Examination Transmittal	Exhibit	1312	Petitioner	Yes
06/04/2014	2nd Notice of Allowance and Fees	Exhibit	1313	Petitioner	Yes
06/04/2014	Infringement Contentions	Exhibit	1314	Petitioner	Yes
06/04/2014	Rembrandt Markman Brief	Exhibit	1315	Petitioner	Yes
06/04/2014	580 Application as Filed	Exhibit	1316	Petitioner	Yes
06/04/2014	580 Office Action Summary	Exhibit	1317	Petitioner	Yes
06/04/2014	580 3.1.2011 Reply	Exhibit	1318	Petitioner	Yes
06/04/2014	Rembrandt Tutorial Reference	Exhibit	1319	Petitioner	Yes
06/04/2014	IEEE Dictionary	Exhibit	1320	Petitioner	Yes
06/04/2014	Communications Dictionary Master Slave	Exhibit	1321	Petitioner	Yes
06/04/2014	Mears Declaration and Upender	Exhibit	1322	Petitioner	Yes
06/04/2014	Goodman Declaration	Exhibit	1323	Petitioner	Yes
06/18/2014	Notice of Filing Date Accorded to Petition	Notice of Filing Date Accorded to Petition	3	Board	Yes
06/20/2014	Power of Attorney	Power of Attorney	4	Potential Patent Owner	Yes
06/20/2014	Related Matters	Notice	5	Potential Patent Owner	Yes
09/18/2014	PO Preliminary Response	Preliminary Response	6	Patent Owner	Yes
09/18/2014	Exhibit 2701	Exhibit	2701	Patent Owner	Yes
09/18/2014	Exhibit 2702	Exhibit	2702	Patent Owner	Yes
09/18/2014	Exhibit 2703	Exhibit	2703	Patent Owner	Yes
09/18/2014	Exhibit 2704	Exhibit	2704	Patent Owner	Yes
09/18/2014	Exhibit 2705	Exhibit	2705	Patent Owner	Yes
09/18/2014	Exhibit 2706	Exhibit	2706	Patent Owner	Yes
09/18/2014	Exhibit 2707	Exhibit	2707		Yes

				Patent Owner	
10/31/2014	Supplemental Mandatory Notice	Notice	7	Patent Owner	Yes
12/10/2014	Decision - Institution of Inter Partes Review 37 C.F.R. 42.108	Institution Decision	8	Board	Yes
12/10/2014	Scheduling Order	Notice	9	Board	Yes
12/10/2014	Patent Owner's Supplemental Mandatory Notice Information Under 37 C.F.R. 42.8	Notice	10	Patent Owner	Yes
12/16/2014	Patent Owner's List of Proposed Motions	Notice	11	Patent Owner	Yes
12/16/2014	Petitioners List of Proposed Motions	Notice	12	Petitioner	Yes
12/19/2014	ORDER Conduct of Proceeding	Notice	13	Board	Yes
12/23/2014	Petitioner Request for Rehearing	Rehearing Request	14	Petitioner	Yes
01/06/2015	Supplemental Mandatory Notice	Notice	15	Petitioner	Yes
01/09/2015	Supplemental Mandatory Notice	Notice	16	Petitioner	Yes
01/27/2015	DECISION Request for Rehearing	Notice	17	Board	Yes
01/30/2015	PO Supplemental Mandatory Notice	Notice	18	Patent Owner	Yes
02/17/2015	Patent Owner's Response	Opposition	19	Patent Owner	Yes
02/17/2015	Exhibit 2708	Exhibit	2708	Patent Owner	Yes
02/17/2015	Exhibit 2709	Exhibit	2709	Patent Owner	Yes
02/17/2015	Exhibit 2710	Exhibit	2710	Patent Owner	Yes
02/17/2015	Exhibit 2711	Exhibit	2711	Patent Owner	Yes
02/17/2015	Exhibit 2712	Exhibit	2712	Patent Owner	Yes
02/17/2015	Exhibit 2713	Exhibit	2713	Patent Owner	Yes
02/17/2015	Exhibit 2714	Exhibit	2714	Patent Owner	Yes
02/17/2015	Exhibit 2715	Exhibit	2715	Patent Owner	Yes
02/17/2015	Exhibit 2716	Exhibit	2716	Patent Owner	Yes
02/17/2015	Exhibit 2717	Exhibit	2717	Patent Owner	Yes
02/17/2015	Exhibit 2718	Exhibit	2718	Patent Owner	Yes
02/17/2015	Exhibit 2719	Exhibit	2719	Patent Owner	Yes
03/02/2015	Power of Attorney	Power of Attorney	20	Petitioner	Yes
03/20/2015	Petitioners_ Motion to Withdraw As Counsel (IPR2014-00892)	Motion	21	Petitioner	Yes

03/20/2015	Petitioners_ Motion to Change Designation of Lead Counsel (IPR2014-00892)	Motion	22	Petitioner	Yes
03/20/2015	Power of Attorney	Power of Attorney	23	Petitioner	Yes
03/25/2015	Petitioner's Unopposed Motion for Pro Hac Vice Admission of Brian P. Biddinger	Motion	24	Petitioner	Yes
03/26/2015	Order Conduct of Proceedings	Order	25	Board	Yes
03/27/2015	DECISION - Petitioner's Motion for Pro Hac Vice Admission of Mr. Biddinger	Notice	26	Board	Yes
04/07/2015	Petitioners' Supplemental Mandatory Notice	Notice	27	Petitioner	Yes
04/13/2015	Order - Conduct of Proceeding - 37 CFR 42.5	Order	28	Board	Yes
04/23/2015	Petitioners' Reply In Support of Its Petition for IPR Review	Reply	29	Petitioner	Yes
04/23/2015	Deposition Transcript of Philip J. Koopman, Jr., Ph.D., dated January 13, 2015	Exhibit	1324	Petitioner	Yes
04/23/2015	Data Network Evaluation Criteria Handbook, dated June 2009	Exhibit	1325	Petitioner	Yes
04/23/2015	Order Granting Motion for Fees and Costs, dated August 29, 2012.	Exhibit	1326	Petitioner	Yes
04/23/2015	Deposition Transcript of Dr. Christopher Jones, dated January 7, 2015	Exhibit	1327	Petitioner	Yes
04/23/2015	Illustration of DBPSK modulation drawn by Dr. Christopher Jones at deposition, January 7, 2015	Exhibit	1328	Petitioner	Yes
04/23/2015	Illustration of 5 Mbps PPM/DQPSK modulation drawn by Dr. Christopher Jones at deposition, January 7, 2015	Exhibit	1329	Petitioner	Yes
04/23/2015	Illustration of 8 Mbps PPM/DQPSK modulation drawn by Dr. Christopher Jones at deposition, January 7, 2015	Exhibit	1330	Petitioner	Yes
04/23/2015	Illustration by Dr. Christopher Jones drawn at deposition, January 7, 2015	Exhibit	1331	Petitioner	Yes
04/23/2015	Illustration by Dr. Christopher Jones drawn at deposition, January 7, 2015	Exhibit	1332	Petitioner	Yes
04/23/2015	Illustration by Dr. Christopher Jones drawn at deposition, January 7, 2015	Exhibit	1333	Petitioner	Yes
04/23/2015	Illustration by Dr. Christopher Jones drawn at deposition, January 7, 2015	Exhibit	1334	Petitioner	Yes
04/23/2015	Illustration by Dr. Christopher Jones drawn at deposition, January 7, 2015	Exhibit	1335	Petitioner	Yes
04/23/2015	U.S. Patent No. 5,450,404	Exhibit	1336	Petitioner	Yes

04/23/2015	U.S. Patent No. 5,436,901	Exhibit	1337	Petitioner	Yes
04/23/2015	U.S. Patent No. 5,535,212	Exhibit	1338	Petitioner	Yes
04/23/2015	Order Granting Toshiba America Information Systems Motion to Unseal Court Orders, dated June 27, 2013.	Exhibit	1339	Petitioner	Yes
04/23/2015	Telecommunications Communications Technologies, at page V - January 2010	Exhibit	1340	Petitioner	Yes
04/23/2015	WIRELESS COMMUNICATION SYSTEMS - Cambridge University Press 2010	Exhibit	1341	Petitioner	Yes
05/29/2015	Power of Attorney	Power of Attorney	30	Patent Owner	Yes
05/29/2015	PO Supplemental Mandatory Notice	Notice	31	Patent Owner	Yes
06/05/2015	Order - Conduct of Proceeding - 37 CFR 42.5	Order	32	Board	Yes
06/11/2015	PO Identification of Information to be Stricken	Motion	33	Patent Owner	Yes
06/11/2015	Exhibit 3001 - Transcript of June 3, 2015 Conference Call	Exhibit	3001	Patent Owner	Yes
06/15/2015	PO Request for Oral Argument	Notice	34	Patent Owner	Yes
06/15/2015	Petitioners' Request for Oral Hearing	Notice	35	Petitioner	Yes
06/15/2015	PO Motion to Exclude	Motion	36	Patent Owner	Yes
06/15/2015	Ex. 2720 - PO Objections to Evidence Submitted with Reply	Exhibit	2720	Patent Owner	Yes
06/17/2015	Order Trial Hearing Notice	Notice	37	Board	Yes
06/17/2015	Power of Attorney	Power of Attorney	38	Patent Owner	Yes
06/17/2015	Patent Owner Supplemental Mandatory Notice	Notice	39	Patent Owner	Yes
06/18/2015	Petitioners' Resonse to PO's Identification of Matter to be Stricken from Petitioners' Reply	Reply	40	Petitioner	Yes
07/02/2015	Petitioner's Opposition to Patent Owner's Motion to Exclude Evidence	Opposition	41	Petitioner	Yes
07/02/2015	Wireless Communication Systems	Exhibit	1342	Petitioner	Yes
07/02/2015	Declaration of Meera Nair	Exhibit	1343	Petitioner	Yes
07/13/2015	PO Reply in support of Motion to Exclude	Reply	42	Patent Owner	Yes
07/17/2015	Petitioners' Updated Exhibit List - July 17, 2015	Notice	43	Petitioner	Yes
07/17/2015	Petitioners' Demonstratives	Exhibit	1344	Petitioner	Yes
07/29/2015	Order - re Request for Conference Call	Order	44	Board	Yes
09/16/2015	Record of Oral Hearing	Notice	45	Board	Yes
09/24/2015	Final Written Decision	Final Decision	46	Board	Yes

Copyright © 2016 LexisNexis CourtLink, Inc. All rights reserved.
*** THIS DATA IS FOR INFORMATIONAL PURPOSES ONLY ***

United States Patent Trial and Appeals Board

US Patent Trial and Appeals Board - Alexandria
(Alexandria)

IPR2014-00893

Samsung Electronics Co. Ltd. Vs. Rembrandt Wireless Technologies, LP

This case was retrieved from the court on Wednesday, June 08, 2016

Header

Case Number:	IPR2014-00893
Date Filed:	06/04/2014
Date Full Case Retrieved:	06/08/2016
Status:	Closed
Misc:	Civil

[Summary][Participants][Proceedings]

Summary

Court Case Status:	Final Decision
Case Type:	IPR: Inter partes review
Date of Decision to Institute Case:	12/10/2014
Technical Center Number:	2600
Patent Application Number:	13198568
Patent Number:	8457228

Participants

Litigants

Samsung Electronics Co. Ltd.
Petitioner

Rembrandt Wireless Technologies, LP
PatentOwner

Proceedings

File Date	Details	Document Type	Paper/Exhibit No.	Filed By	Public?
06/04/2014	Power of Attorney	Power of Attorney	1	Petitioner	Yes
06/04/2014	Petition for Inter Partes Review of U.S. Patent No. 8,457,228	Petition	2	Petitioner	Yes

06/04/2014	Patent US8,457,228	Exhibit	1401	Petitioner	Yes
06/04/2014	Complaint	Exhibit	1402	Petitioner	Yes
06/04/2014	Amended Complaint	Exhibit	1403	Petitioner	Yes
06/04/2014	Boer US5706428	Exhibit	1404	Petitioner	Yes
06/04/2014	Patent US6614838	Exhibit	1405	Petitioner	Yes
06/04/2014	838 June 28 2001 Office Action Summary	Exhibit	1406	Petitioner	Yes
06/04/2014	Oct 1 2001 Response	Exhibit	1407	Petitioner	Yes
06/04/2014	228 Application as Filed	Exhibit	1408	Petitioner	Yes
06/04/2014	228 4.30.2012 Office Action Summary	Exhibit	1409	Petitioner	Yes
06/04/2014	10.19.2012 OA Response	Exhibit	1410	Petitioner	Yes
06/04/2014	228 Notice of Allowance and Fees	Exhibit	1411	Petitioner	Yes
06/04/2014	Request for Continued Examination Transmittal	Exhibit	1412	Petitioner	Yes
06/04/2014	2nd Notice of Allowance and Fees	Exhibit	1413	Petitioner	Yes
06/04/2014	Infringement Contentions	Exhibit	1414	Petitioner	Yes
06/04/2014	Rembrandt Markman Brief	Exhibit	1415	Petitioner	Yes
06/04/2014	580 Application as Filed	Exhibit	1416	Petitioner	Yes
06/04/2014	580 Office Action Summary	Exhibit	1417	Petitioner	Yes
06/04/2014	580 3.1.2011 Reply	Exhibit	1418	Petitioner	Yes
06/04/2014	Rembrandt Tutorial Reference	Exhibit	1419	Petitioner	Yes
06/04/2014	IEEE Dictionary	Exhibit	1420	Petitioner	Yes
06/04/2014	Commuications Dictionary Master Slave	Exhibit	1421	Petitioner	Yes
06/04/2014	Mears Declaration and Upender	Exhibit	1422	Petitioner	Yes
06/04/2014	Goodman Declaration	Exhibit	1423	Petitioner	Yes
06/18/2014	Notice of Filing Date Accorded to Petition	Notice of Filing Date Accorded to Petition	3	Board	Yes
06/20/2014	Power of Attorney	Power of Attorney	4	Potential Patent Owner	Yes
06/20/2014	Related Matters	Notice	5	Potential Patent Owner	Yes
09/18/2014	PO Preliminary Response	Preliminary Response	6	Patent Owner	Yes
09/18/2014	Exhibit 2801	Exhibit	2801	Patent Owner	Yes
09/18/2014	Exhibit 2802	Exhibit	2802	Patent Owner	Yes
09/18/2014	Exhibit 2803	Exhibit	2803	Patent Owner	Yes
09/18/2014	Exhibit 2804	Exhibit	2804	Patent Owner	Yes
09/18/2014	Exhibit 2805	Exhibit	2805	Patent Owner	Yes
09/18/2014	Exhibit 2806	Exhibit	2806	Patent Owner	Yes
09/18/2014	Exhibit 2807	Exhibit	2807		Yes

				Patent Owner	
10/31/2014	Supplemental Mandatory Notice	Notice	7	Patent Owner	Yes
12/10/2014	Decision - Institution of Inter Partes Review 37 C.F.R. 42.108	Institution Decision	8	Board	Yes
12/10/2014	Scheduling Order	Notice	9	Board	Yes
12/10/2014	Patent Owner's Supplemental Mandatory Notice Information Under 37 C.F.R. 42.8	Notice	10	Patent Owner	Yes
12/16/2014	Patent Owner's List of Proposed Motions	Notice	11	Patent Owner	Yes
12/16/2014	Petitioner's List of Proposed Motions	Notice	12	Petitioner	Yes
12/19/2014	ORDER Conduct of Proceeding	Notice	13	Board	Yes
01/06/2015	Supplemental Mandatory Notice	Notice	14	Petitioner	Yes
01/09/2015	Supplemental Mandatory Notice	Notice	15	Petitioner	Yes
01/30/2015	PO Supplemental Mandatory Notice	Notice	16	Patent Owner	Yes
02/17/2015	Patent Owner's Response	Opposition	17	Patent Owner	Yes
02/17/2015	Exhibit 2808	Exhibit	2808	Patent Owner	Yes
02/17/2015	Exhibit 2809	Exhibit	2809	Patent Owner	Yes
02/17/2015	Exhibit 2810	Exhibit	2810	Patent Owner	Yes
02/17/2015	Exhibit 2811	Exhibit	2811	Patent Owner	Yes
02/17/2015	Exhibit 2812	Exhibit	2812	Patent Owner	Yes
02/17/2015	Exhibit 2813	Exhibit	2813	Patent Owner	Yes
02/17/2015	Exhibit 2814	Exhibit	2814	Patent Owner	Yes
02/17/2015	Exhibit 2815	Exhibit	2815	Patent Owner	Yes
02/17/2015	Exhibit 2816	Exhibit	2816	Patent Owner	Yes
02/17/2015	Exhibit 2817	Exhibit	2817	Patent Owner	Yes
02/17/2015	Exhibit 2818	Exhibit	2818	Patent Owner	Yes
02/17/2015	Exhibit 2819	Exhibit	2819	Patent Owner	Yes
03/02/2015	Power of Attorney	Power of Attorney	18	Petitioner	Yes
03/20/2015	Petitioners_ Motion to Withdraw As Counsel (IPR2014-00893)	Motion	19	Petitioner	Yes
03/20/2015	Petitioners_ Motion to Change Designation of Lead Counsel (IPR2014-00893)	Motion	20	Petitioner	Yes
03/20/2015	Power of Attorney	Power of Attorney	21	Petitioner	Yes

03/25/2015	Petitioner's Unopposed Motion for Pro Hac Vice Admission of Brian P. Biddinger	Motion	22	Petitioner	Yes
03/26/2015	Order Conduct of Proceedings	Order	23	Board	Yes
03/27/2015	DECISION - Petitioner's Motion for Pro Hac Vice Admission of Mr. Biddinger	Notice	24	Board	Yes
04/07/2015	Petitioners' Supplemental Mandatory Notice	Notice	25	Petitioner	Yes
04/13/2015	Order - Conduct of the Proceeding - 37 CFR 42.5	Order	26	Board	Yes
04/23/2015	Petitioners' Reply In Support of Its Petition for IPR Review	Reply	27	Petitioner	Yes
04/23/2015	Deposition Transcript of Philip J. Koopman, Jr., Ph.D.	Exhibit	1424	Petitioner	Yes
04/23/2015	Data Network Evaluation Criteria Handbook, DOT/FAA/AR-09/24 Final Report, dated June 2009	Exhibit	1425	Petitioner	Yes
04/23/2015	Order Granting Motion for Fees and Costs dated August 29, 2012	Exhibit	1426	Petitioner	Yes
04/23/2015	Deposition Transcript of Dr. Christopher Jones, dated January 7, 2015	Exhibit	1427	Petitioner	Yes
04/23/2015	Illustration of DBPSK modulation drawn by Dr. Christopher Jones at deposition in IPR2014-518 and IPR2014-519, January 7, 2015	Exhibit	1428	Petitioner	Yes
04/23/2015	Illustration of 5 Mbps PPM/DQPSK modulation drawn by Dr. Christopher Jones at deposition in IPR2014-518 and IPR2014-519, January 7, 2015	Exhibit	1429	Petitioner	Yes
04/23/2015	Illustration of 8 Mbps PPM/DQPSK modulation drawn by Dr. Christopher Jones at deposition, January 7, 2015	Exhibit	1430	Petitioner	Yes
04/23/2015	Illustration by Dr. Christopher Jones drawn at deposition, January 7, 2015	Exhibit	1431	Petitioner	Yes
04/23/2015	Illustration by Dr. Christopher Jones drawn at deposition, January 7, 2015	Exhibit	1432	Petitioner	Yes
04/23/2015	Illustration by Dr. Christopher Jones drawn at deposition, January 7, 2015	Exhibit	1433	Petitioner	Yes
04/23/2015	Illustration by Dr. Christopher Jones drawn at deposition, January 7, 2015	Exhibit	1434	Petitioner	Yes
04/23/2015	Illustration by Dr. Christopher Jones drawn at deposition, January 7, 2015	Exhibit	1435	Petitioner	Yes
04/23/2015	U.S. Patent No. 5,450,404	Exhibit	1436	Petitioner	Yes
04/23/2015	U.S. Patent No. 5,436,901	Exhibit	1437	Petitioner	Yes
04/23/2015	U.S. Patent No. 5,535,212	Exhibit	1438	Petitioner	Yes
04/23/2015		Exhibit	1439	Petitioner	Yes

	Order Granting Toshiba America Information Systems Motion to Unseal Court Orders dated June 27, 2013.				
04/23/2015	Lab-Volt, Pulse Modulation and Sampling (PAM/PWM/PPM), Telecommunications Communications Technologies, at page V (Jan. 2010)	Exhibit	1440	Petitioner	Yes
04/23/2015	WIRELESS COMMUNICATION SYSTEMS - Cambridge University Press 2010	Exhibit	1441	Petitioner	Yes
05/29/2015	Power of Attorney	Power of Attorney	28	Patent Owner	Yes
05/29/2015	PO Supplemental Mandatory Notice	Notice	29	Patent Owner	Yes
06/05/2015	Order - Conduct of Proceeding - 37 CFR 42.5	Order	30	Board	Yes
06/11/2015	PO Identification of Information to be Stricken	Motion	31	Patent Owner	Yes
06/11/2015	Exhibit 3001 - Transcript of June 3, 2015 Conference Call	Exhibit	3001	Patent Owner	Yes
06/15/2015	PO Request for Oral Argument	Notice	32	Patent Owner	Yes
06/15/2015	Petitioners' Request for Oral Hearing	Notice	33	Petitioner	Yes
06/15/2015	PO Motion to Exclude	Motion	34	Patent Owner	Yes
06/15/2015	Ex. 2820 - PO Objections to Evidence Submitted with Reply	Exhibit	2820	Patent Owner	Yes
06/17/2015	Order Trial Hearing Notice	Notice	35	Board	Yes
06/17/2015	Power of Attorney	Power of Attorney	36	Patent Owner	Yes
06/17/2015	Patent Owner Supplemental Mandatory Notice	Notice	37	Patent Owner	Yes
06/18/2015	Petitioners' Response to PO's Identification of Matter to be Stricken from Petitioners' Reply	Reply	38	Petitioner	Yes
07/02/2015	Petitioner's Opposition to Patent Owner's Motion to Exclude Evidence	Opposition	39	Petitioner	Yes
07/02/2015	Wireless Communication Systems	Exhibit	1442	Petitioner	Yes
07/02/2015	Declaration of Meera Nair	Exhibit	1443	Petitioner	Yes
07/13/2015	PO Reply in support of Motion to Exclude	Reply	40	Patent Owner	Yes
07/17/2015	Petitioners' Updated Exhibit List - July 17, 2015	Notice	41	Petitioner	Yes
07/17/2015	Petitioners' Demonstratives	Exhibit	1444	Petitioner	Yes
07/29/2015	Order - re Request for Conference Call	Order	42	Board	Yes
09/16/2015	Record of Oral Hearing	Notice	43	Board	Yes
09/24/2015	Final Written Decision	Final Decision	44	Board	Yes

Copyright © 2016 LexisNexis CourtLink, Inc. All rights reserved.
*** THIS DATA IS FOR INFORMATIONAL PURPOSES ONLY ***

United States Patent Trial and Appeals Board

US Patent Trial and Appeals Board - Alexandria
(Alexandria)

IPR2014-00895

Samsung Electronics Co. Ltd. Vs. Rembrandt Wireless Technologies, LP

This case was retrieved from the court on Wednesday, June 08, 2016

Header

Case Number:	IPR2014-00895
Date Filed:	06/04/2014
Date Full Case Retrieved:	06/08/2016
Status:	Closed
Misc:	Civil

[Summary][Participants][Proceedings]

Summary

Court Case Status:	Final Decision
Case Type:	IPR: Inter partes review
Date of Decision to Institute Case:	12/10/2014
Technical Center Number:	2600
Patent Application Number:	13198568
Patent Number:	8457228

Participants

Litigants

Samsung Electronics Co. Ltd.
Petitioner

Rembrandt Wireless Technologies, LP
PatentOwner

Proceedings

File Date	Details	Document Type	Paper/Exhibit No.	Filed By	Public?
06/04/2014	Power of Attorney	Power of Attorney	1	Petitioner	Yes
06/04/2014	Petition for Inter Partes Review of U.S. Patent No. 8,457,228	Petition	2	Petitioner	Yes

06/04/2014	Patent No. US8457228	Exhibit	1501	Petitioner	Yes
06/04/2014	Complaint	Exhibit	1502	Petitioner	Yes
06/04/2014	Amended Complaint	Exhibit	1503	Petitioner	Yes
06/04/2014	Boer US5706428	Exhibit	1504	Petitioner	Yes
06/04/2014	Patent US6614838	Exhibit	1505	Petitioner	Yes
06/04/2014	838 June 28 2001 Office Action Summary	Exhibit	1506	Petitioner	Yes
06/04/2014	Oct 1 2001 Response	Exhibit	1507	Petitioner	Yes
06/04/2014	228 Application as Filed	Exhibit	1508	Petitioner	Yes
06/04/2014	228 4.30.2012 Office Action Summary	Exhibit	1509	Petitioner	Yes
06/04/2014	10.19.2012 OA Response	Exhibit	1510	Petitioner	Yes
06/04/2014	228 Notice of Allowance and Fees Due	Exhibit	1511	Petitioner	Yes
06/04/2014	228 Request for Continued Examination Transmittal	Exhibit	1512	Petitioner	Yes
06/04/2014	228 2nd Notice of Allowance and Fees Due	Exhibit	1513	Petitioner	Yes
06/04/2014	Infringement Contentions	Exhibit	1514	Petitioner	Yes
06/04/2014	Rembrandt Markman Brief	Exhibit	1515	Petitioner	Yes
06/04/2014	580 Application as Filed	Exhibit	1516	Petitioner	Yes
06/04/2014	580 Office Action Summary	Exhibit	1517	Petitioner	Yes
06/04/2014	580 3.1.2011 Reply	Exhibit	1518	Petitioner	Yes
06/04/2014	Rembrandt Tutorial Reference	Exhibit	1519	Petitioner	Yes
06/04/2014	IEEE Dictionary	Exhibit	1520	Petitioner	Yes
06/04/2014	Commuications Dictionary Master Slave	Exhibit	1521	Petitioner	Yes
06/04/2014	Mears Declaration and Upender	Exhibit	1522	Petitioner	Yes
06/04/2014	Draft 802.11 Std	Exhibit	1523	Petitioner	Yes
06/04/2014	Cafarella US5809060	Exhibit	1524	Petitioner	Yes
06/04/2014	Bialkowiski US5574910	Exhibit	1525	Petitioner	Yes
06/04/2014	Goodman Declaration	Exhibit	1526	Petitioner	Yes
06/18/2014	Notice of Filing Date Accorded to Petition	Notice of Filing Date Accorded to Petition	3	Board	Yes
06/20/2014	Power of Attorney	Power of Attorney	4	Potential Patent Owner	Yes
06/20/2014	Related Matters	Notice	5	Potential Patent Owner	Yes
09/18/2014	PO Preliminary Response	Preliminary Response	6	Patent Owner	Yes
09/18/2014	Exhibit 2901	Exhibit	2901	Patent Owner	Yes
09/18/2014	Exhibit 2902	Exhibit	2902	Patent Owner	Yes
09/18/2014	Exhibit 2903	Exhibit	2903	Patent Owner	Yes
09/18/2014	Exhibit 2904	Exhibit	2904	Patent Owner	Yes

09/18/2014	Exhibit 2905	Exhibit	2905	Patent Owner	Yes
09/18/2014	Exhibit 2906	Exhibit	2906	Patent Owner	Yes
09/18/2014	Exhibit 2907	Exhibit	2907	Patent Owner	Yes
10/31/2014	Supplemental Mandatory Notice	Notice	7	Patent Owner	Yes
12/10/2014	Decision - Institution of Inter Partes Review - 37 C.F.R. 42.108	Institution Decision	8	Board	Yes
12/10/2014	Scheduling Order	Notice	9	Board	Yes
12/10/2014	Patent Owner's Supplemental Mandatory Notice Information Under 37 C.F.R. 42.8	Notice	10	Patent Owner	Yes
12/16/2014	Patent Owner's List of Proposed Motions	Notice	11	Patent Owner	Yes
12/16/2014	Petitioner's List of Proposed Motions	Notice	12	Petitioner	Yes
12/19/2014	ORDER Conduct of Proceeding	Notice	13	Board	Yes
01/06/2015	Supplemental Mandatory Notice	Notice	14	Petitioner	Yes
01/09/2015	Supplemental Mandatory Notice	Notice	15	Petitioner	Yes
01/30/2015	PO Supplemental Mandatory Notice	Notice	16	Patent Owner	Yes
02/17/2015	Patent Owner's Response	Opposition	17	Patent Owner	Yes
02/17/2015	Exhibit 2908	Exhibit	2908	Patent Owner	Yes
02/17/2015	Exhibit 2909	Exhibit	2909	Patent Owner	Yes
02/17/2015	Exhibit 2910	Exhibit	2910	Patent Owner	Yes
02/17/2015	Exhibit 2911	Exhibit	2911	Patent Owner	Yes
02/17/2015	Exhibit 2912	Exhibit	2912	Patent Owner	Yes
02/17/2015	Exhibit 2913	Exhibit	2913	Patent Owner	Yes
02/17/2015	Exhibit 2914	Exhibit	2914	Patent Owner	Yes
02/17/2015	Exhibit 2915	Exhibit	2915	Patent Owner	Yes
02/17/2015	Exhibit 2916	Exhibit	2916	Patent Owner	Yes
02/17/2015	Exhibit 2917	Exhibit	2917	Patent Owner	Yes
02/17/2015	Exhibit 2918	Exhibit	2918	Patent Owner	Yes
02/17/2015	Exhibit 2919	Exhibit	2919	Patent Owner	Yes
03/02/2015	Power of Attorney	Power of Attorney	18	Petitioner	Yes
03/20/2015	Petitioners_ Motion to Withdraw As Counsel (IPR2014-00895)	Motion	19	Petitioner	Yes

03/20/2015	Petitioners_ Motion to Change Designation of Lead Counsel (IPR2014-00895)	Motion	20	Petitioner	Yes
03/20/2015	Power of Attorney	Power of Attorney	21	Petitioner	Yes
03/25/2015	Petitioner's Unopposed Motion for Pro Hac Vice Admission of Brian P. Biddinger	Motion	22	Petitioner	Yes
03/26/2015	Order Conduct of Proceedings	Order	23	Board	Yes
03/27/2015	DECISION - Petitioner's Motion for Pro Hac Vice Admission of Mr. Biddinger	Notice	24	Board	Yes
04/07/2015	Petitioners' Supplemental Mandatory Notice	Notice	25	Petitioner	Yes
04/13/2015	Order - Conduct of the Proceeding - 37 CFR 42.5	Order	26	Board	Yes
04/23/2015	Petitioners' Reply In Support of Its Petition for IPR Review	Reply	27	Petitioner	Yes
04/23/2015	Deposition Transcript of Philip J. Koopman, Jr., Ph.D., dated January 13, 2015	Exhibit	1527	Petitioner	Yes
04/23/2015	Data Network Evaluation Criteria Handbook, dated June 2009	Exhibit	1528	Petitioner	Yes
04/23/2015	Order Granting Motion for Fees and Costs, dated August 29, 2012.	Exhibit	1529	Petitioner	Yes
04/23/2015	Deposition Transcript of Dr. Christopher Jones, dated January 7, 2015	Exhibit	1530	Petitioner	Yes
04/23/2015	Illustration of DBPSK modulation drawn by Dr. Christopher Jones at deposition, January 7, 2015	Exhibit	1531	Petitioner	Yes
04/23/2015	Illustration of 5 Mbps PPM/DQPSK modulation drawn by Dr. Christopher Jones at deposition, January 7, 2015	Exhibit	1532	Petitioner	Yes
04/23/2015	Illustration of 8 Mbps PPM/DQPSK modulation drawn by Dr. Christopher Jones at deposition, January 7, 2015	Exhibit	1533	Petitioner	Yes
04/23/2015	Illustration by Dr. Christopher Jones drawn at deposition, January 7, 2015	Exhibit	1534	Petitioner	Yes
04/23/2015	Illustration by Dr. Christopher Jones drawn at deposition, January 7, 2015	Exhibit	1535	Petitioner	Yes
04/23/2015	Illustration by Dr. Christopher Jones drawn at deposition, January 7, 2015	Exhibit	1536	Petitioner	Yes
04/23/2015	Illustration by Dr. Christopher Jones drawn at deposition, January 7, 2015	Exhibit	1537	Petitioner	Yes
04/23/2015	Illustration by Dr. Christopher Jones drawn at deposition, January 7, 2015	Exhibit	1538	Petitioner	Yes
04/23/2015	U.S. Patent No. 5,450,404	Exhibit	1539	Petitioner	Yes

04/23/2015	U.S. Patent No. 5,436,901	Exhibit	1540	Petitioner	Yes
04/23/2015	U.S. Patent No. 5,535,212	Exhibit	1541	Petitioner	Yes
04/23/2015	Order Granting Toshiba America Information Systems Motion to Unseal Court Orders, dated June 27, 2013	Exhibit	1542	Petitioner	Yes
04/23/2015	Lab-Volt, Pulse Modulation and Sampling, Telecommunications Communications Technologies - January 2010	Exhibit	1543	Petitioner	Yes
04/23/2015	WIRELESS COMMUNICATION SYSTEMS - Cambridge University Press 2010	Exhibit	1544	Petitioner	Yes
05/29/2015	Power of Attorney	Power of Attorney	28	Patent Owner	Yes
05/29/2015	PO Supplemental Mandatory Notice	Notice	29	Patent Owner	Yes
06/05/2015	Order - Conduct of Proceeding - 37 CFR 42.5	Order	30	Board	Yes
06/11/2015	PO Identification of Information to be Stricken	Motion	31	Patent Owner	Yes
06/11/2015	Exhibit 3001 - Transcript of June 3, 2015 Conference Call	Exhibit	3001	Patent Owner	Yes
06/15/2015	PO Request for Oral Argument	Notice	32	Patent Owner	Yes
06/15/2015	Petitioners' Request for Oral Hearing	Notice	33	Petitioner	Yes
06/15/2015	PO Motion to Exclude	Motion	34	Patent Owner	Yes
06/15/2015	Ex. 2920 - PO Objections to Evidence Submitted with Reply	Exhibit	2920	Patent Owner	Yes
06/17/2015	Order Trial Hearing Notice	Notice	35	Board	Yes
06/17/2015	Power of Attorney	Power of Attorney	36	Patent Owner	Yes
06/17/2015	Patent Owner Supplemental Mandatory Notice	Notice	37	Patent Owner	Yes
06/18/2015	Petitioners' Response to PO's Identification of Matter to be Stricken from Petitioners' Reply	Reply	38	Petitioner	Yes
07/02/2015	Petitioner's Opposition to Patent Owner's Motion to Exclude Evidence	Opposition	39	Petitioner	Yes
07/02/2015	Wireless Communication Systems	Exhibit	1545	Petitioner	Yes
07/02/2015	Declaration of Meera Nair	Exhibit	1546	Petitioner	Yes
07/13/2015	PO Reply in support of Motion to Exclude	Reply	40	Patent Owner	Yes
07/17/2015	Petitioners' Updated Exhibit List - July 17, 2015	Notice	41	Petitioner	Yes
07/17/2015	Petitioners' Demonstratives	Exhibit	1547	Petitioner	Yes
07/29/2015	Order - re Request for Conference Call	Order	42	Board	Yes
09/16/2015	Record of Oral Hearing	Notice	43	Board	Yes
09/24/2015	Final Written Decision	Final Decision	44	Board	Yes

Copyright © 2016 LexisNexis CourtLink, Inc. All rights reserved.
*** THIS DATA IS FOR INFORMATIONAL PURPOSES ONLY ***

UNITED STATES PATENT AND TRADEMARK OFFICE GRANTED PATENT

8457228

Get Drawing Sheet 1 of 8
Access PDF of Official Patent *
Order Patent File History / Wrapper from REEDFAX®
Link to Claims Section

June 4, 2013

System and method of communication using at least two modulation methods

INVENTOR: Bremer, Gordon F. - Clearwater, Florida, United States of America (US), United States of America ()

APPL-NO: 198568 (13)

FILED-DATE: August 4, 2011

GRANTED-DATE: June 4, 2013

ASSIGNEE-PRE-ISSUE:
October 19, 2011 - ASSIGNMENT OF ASSIGNORS INTEREST (SEE DOCUMENT FOR DETAILS)., REMBRANDT WIRELESS TECHNOLOGIES, LP, SUITE 700, 1655 NORTH FORT MEYERS DRIVE, ARLINGTON, VIRGINIA, UNITED STATES OF AMERICA (US), 22209, Reel and Frame Number: 027085/0636

ASSIGNEE-AT-ISSUE:
Bremer, Gordon F., Clearwater, Florida, United States of America (US)

LEGAL-STATUS:

October 19, 2011 - ASSIGNMENT

PRIM-EXMR: Ha, Dac

CORE TERMS: modulation, trib, transceiver, master, sequence, modem, training, message, session, trailing, transmission, multipoint, communicate, medium, transmitted, memory, slave, communications system, modulated, user, methods used, transition, magnetic, optical, computer-readable, incompatible, demodulator, compatible, modulator, internet

ENGLISH-ABST:

A device may be capable of communicating using at least two type types of modulation methods. Methods and systems are provided for communication of data according to a communications method in which a master transceiver communicates with one or more slave transceivers according to a master/slave relationship. A first data message may include first information and second information that are modulated according to a first modulation method. The second information may include lower data rate data. A second data message may include third information that may be modulated according to the first modulation method and that may indicate an impending change to a second modulation method. The second modulation method may be used for transmitting fourth information, and the fourth information may be included in the second message. The fourth information may include higher data rate data, for

example Internet access data.

NO-OF-CLAIMS: 52

PARENT-PAT-INFO:

CROSS REFERENCE TO RELATED APPLICATION

[0001]This application is a continuation of U.S. application Ser. No. 12/543,910 filed on Aug. 19, 2009, which is a continuation of U.S. application Ser. No. 11/774,803, filed on Jul. 9, 2007, which is a continuation of U.S. application Ser. No. 10/412,878, filed Apr. 14, 2003, which is a continuation-in-part of U.S. application Ser. No. 09/205,205, filed Dec. 4, 1998, and which claims priority to and the benefit of the filing date of U.S. Provisional Application No. 60/067,562, filed Dec. 5, 1997, each of which is incorporated by reference herein.

Source: **Legal > / . . . / > Utility, Design and Plant Patents**
Terms: **PATNO=8457228** (Suggest Terms for My Search)
View: Custom
Segments: Abst, Appl-no, Assignee, Cert-correction, Date, Exmr, Expiration-date, Filed, Filed-date, Inventor, Legal-status, Lit-reex, No-of-claims, Parent-pat-info, Patno, Prim-exmr, Reexam-litigate, Ref-date, Ref-patno, Reissue, Reissue-comment, Rel-patno, Title
Date/Time: Thursday, September 15, 2016 - 11:30 AM EDT

LexisNexis® About LexisNexis | Privacy Policy | Terms & Conditions | Contact Us
Copyright © 2016 LexisNexis, a division of Reed Elsevier Inc. All rights reserved.
RELX Group™

REMBRANDT WIRELESS TECHNOLOGIES, LP, Plaintiff, v. SAMSUNG ELECTRONICS CO., LTD., SAMSUNG ELECTRONICS AMERICA, INC., AND SAMSUNG AUSTIN SEMICONDUCTOR, LLC, Defendants.

CASE NO. 2:13-cv-213-JRG

UNITED STATES DISTRICT COURT FOR THE EASTERN DISTRICT OF TEXAS, MARSHALL DIVISION

2016 U.S. Dist. LEXIS 18797

February 17, 2016, Decided
February 17, 2016, Filed

PRIOR HISTORY: Rembrandt Wireless Techs., LP v. Samsung Elecs. Co., 2014 U.S. Dist. LEXIS 93645 (E.D. Tex., July 10, 2014)

CORE TERMS: modulation, patent, matter of law, new trial, different types, prior art, they're, infringement, protocol, dropped, slave, APPLICABLE LAW, phase, jury verdict, clear and convincing evidence, non-infringement, renewed, combine, frequency, jury trial, citation omitted, patents-in-suit, disclose, invalid, reasonable jurors, reasonable jury, substantial evidence, prejudicial error, overwhelmingly, transmission

COUNSEL: **[*1]** Paul Michelt, Mediator, Pro se, Alexandria, VA.

For William Jospeh Cornelius, Jr, Mediator: William Jospeh Cornelius, Jr, Wilson Robertson & Cornelius PC, Tyler, TX.

David Keyzer, Technical Advisor, Pro se, El Dorado Hills, CA.

For Rembrandt Wireless Technologies LP, Plaintiff: Demetrios Anaipakos, LEAD ATTORNEY, Alisa Anne Lipski, Brian Ervin Simmons, Kyril Vladimir Talanov, Ahmad, Zavitsanos, Anaipakos, Alavi & Mensing P.C., Houston, TX; Alden Harris, PRO HAC VICE, Blaine Andrew Larson, Eric James Enger, Michael F Heim, Miranda Yan Jones, Heim, Payne & Chorush, LLP-Houston, Houston, TX; Amir H. Alavi, Jamie Alan Aycock, Ahmad Zavitsanos & Anaipakos - Houston, Houston, TX; Claire Abernathy Henry, Jack Wesley Hill, Thomas John Ward, Jr, Ward & Smith Law Firm, Longview, TX; Robert Allan Bullwinkel, Heim Payne Chorush, LLP, Houston, TX; Sean R D Gorman, Ahmad, Zavitsanos, Anaipakos, Alavi & Mensing, PC, Houston, TX.

For Samsung Electronics Co LTD, Samsung Electronics America Inc, Sansung Telecommunications America LLC, Samsung Austin Semiconductor LLC, Defendants: Jeffrey Kirk Sherwood, LEAD ATTORNEY, Venable LLP, Washington, DC; Brian P Biddinger, Deanne K Cevasco, Jesse J Jenner, Vincent **[*2]** Y Ling, Ropes & Gray - New York, New York, NY; Daniel G Cardy, Ji Young Park, Dickstein Shapiro, LLP- DC, Washington, DC; Rebecca R Hermes, PRO HAC VICE, Gabrielle Elizabeth Higgins, Ropes & Gray - East Palo Alto, East Pala Alto, CA; Gerard A Haddad, PRO HAC VICE, Jennifer BianRosa, Dickstein Shapiro LLP - New York, New York, NY; Jeffrey A Miller, Dickstein Shapiro LLP - Palo Alto, Palo Alto, CA; Michael Charles Smith, Siebman Burg Phillips & Smith, LLP-Marshall, Marshall, TX.

For Research In Motion Corporation, Defendant: Richard S J Hung, LEAD ATTORNEY, Morrison & Foerster LLP San Francisco, San Francisco, CA; Vincent J Belusko, LEAD ATTORNEY, Jared W

Miller, Morrison & Foerster LLP - Los Angeles, Los Angeles, CA; Edgar Leon Carter, John Steven Torkelson, Carter Scholer Arnett Hamada & Mockler PLLC, Dallas, TX; James Ryan Gilfoil, Lucia Elena Ballard, Morrison & Foerster LLP - San Francisco, San Francisco, CA.

For Research in Motion Ltd, Defendant, Counter Claimant: Richard S J Hung, LEAD ATTORNEY, Morrison & Foerster LLP San Francisco, San Francisco, CA; Vincent J Belusko, LEAD ATTORNEY, Jared W Miller, Morrison & Foerster LLP - Los Angeles, Los Angeles, CA; Edgar Leon Carter, John **[*3]** Steven Torkelson, Carter Scholer Arnett Hamada & Mockler PLLC, Dallas, TX; James Ryan Gilfoil, Morrison & Foerster LLP - San Francisco, San Francisco, CA.

For Research in Motion Ltd, Counter Claimant: Richard S J Hung, LEAD ATTORNEY, Morrison & Foerster LLP San Francisco, San Francisco, CA; Vincent J Belusko, LEAD ATTORNEY, Jared W Miller, Morrison & Foerster LLP - Los Angeles, Los Angeles, CA; James Ryan Gilfoil, Lucia Elena Ballard, Morrison & Foerster LLP - San Francisco, San Francisco, CA; John Steven Torkelson, Carter Scholer Arnett Hamada & Mockler PLLC, Dallas, TX.

For Research In Motion Corporation, Counter Claimant: Richard S J Hung, LEAD ATTORNEY, Morrison & Foerster LLP San Francisco, San Francisco, CA; Vincent J Belusko, LEAD ATTORNEY, Jared W Miller, Morrison & Foerster LLP - Los Angeles, Los Angeles, CA; Eric C Pai, Morrison & Foerster - Palo Alto, Palo Alto, CA; James Ryan Gilfoil, Morrison & Foerster LLP - San Francisco, San Francisco, CA; John Steven Torkelson, Carter Scholer Arnett Hamada & Mockler PLLC, Dallas, TX.

For Rembrandt Wireless Technologies LP, Counter Defendant: Amir H. Alavi, Ahmad Zavitsanos & Anaipakos - Houston, Houston, TX; Brian Ervin Simmons, Demetrios **[*4]** Anaipakos, Ahmad, Zavitsanos, Anaipakos, Alavi & Mensing P.C., Houston, TX; Claire Abernathy Henry, Jack Wesley Hill, Thomas John Ward, Jr, Ward & Smith Law Firm, Longview, TX; Eric James Enger, Michael F Heim, Miranda Yan Jones, Heim, Payne & Chorush, LLP-Houston, Houston, TX; Robert Allan Bullwinkel, Heim Payne Chorush, LLP, Houston, TX.

For Samsung Electronics America Inc, Samsung Electronics Co LTD, Sansung Telecommunications America LLC, Samsung Austin Semiconductor LLC, Samsung Electronics America Inc, Counter Claimants: Jeffrey Kirk Sherwood, LEAD ATTORNEY, Venable LLP, Washington, DC; Daniel G Cardy, Dickstein Shapiro, LLP- DC, Washington, DC; Gerard A Haddad, PRO HAC VICE, Dickstein Shapiro LLP - New York, New York, NY; Michael Charles Smith, Siebman Burg Phillips & Smith, LLP-Marshall, Marshall, TX.

For Research in Motion Ltd, Counter Claimant: Richard S J Hung, LEAD ATTORNEY, Morrison & Foerster LLP San Francisco, San Francisco, CA; Vincent J Belusko, LEAD ATTORNEY, Jared W Miller, Morrison & Foerster LLP - Los Angeles, Los Angeles, CA; Edgar Leon Carter, John Steven Torkelson, Carter Scholer Arnett Hamada & Mockler PLLC, Dallas, TX; Eric C Pai, Morrison & Foerster - Palo **[*5]** Alto, Palo Alto, CA; James Ryan Gilfoil, Morrison & Foerster LLP - San Francisco, San Francisco, CA.

For Rembrandt Wireless Technologies LP, Counter Defendant: Demetrios Anaipakos, LEAD ATTORNEY, Brian Ervin Simmons, Kyril Vladimir Talanov, Ahmad, Zavitsanos, Anaipakos, Alavi & Mensing P.C., Houston, TX; Alden Harris, Blaine Andrew Larson, Eric James Enger, Michael F Heim, Miranda Yan Jones, Heim, Payne & Chorush, LLP-Houston, Houston, TX; Amir H. Alavi, Ahmad Zavitsanos & Anaipakos - Houston, Houston, TX; Claire Abernathy Henry, Jack Wesley Hill, Thomas John Ward, Jr, Ward & Smith Law Firm, Longview, TX; Robert Allan Bullwinkel, Heim Payne Chorush, LLP, Houston, TX.

JUDGES: RODNEY GILSTRAP, UNITED STATES DISTRICT JUDGE.

OPINION BY: RODNEY GILSTRAP

OPINION

MEMORANDUM OPINION AND ORDER

Before the Court is Samsung Defendants' ("Samsung") Rule 50(b) Renewed Motion for Judgment as a Matter of Law and/or Rule 59(a) Motion for New Trial on Liability Issues (Dkt. No. 329 ("Mot."). The Court heard argument on November 3, 2015. For the reasons set forth below, Samsung's Rule 50(b) Renewed Motion for Judgment as a Matter of Law and/or Rule 59 (a) Motion for New Trial on Liability Issues is **DENIED**.

I. BACKGROUND

The Court held a jury trial in this case. The jury returned **[*6]** a verdict on February 13, 2015. The asserted claims of U.S. Patent No. 8,023,580 ("'580 Patent") and U.S. Patent No. **8,457,228** ("'228 Patent"), the two patents-in-suit, involve a system in which devices can communicate with each other on the same network using different modulation methods. The jury returned a unanimous verdict that the asserted claims were infringed and not invalid, and it awarded $15.7 million in damages to Plaintiff Rembrandt Wireless Technologies, LP ("Rembrandt"). ("Verdict", Dkt. No. 288.) Samsung now asserts that the jury did not have sufficient evidence for its findings.

II. APPLICABLE LAW

A. Applicable Law Regarding FED. R. CIV. P. 50

Upon a party's renewed motion for judgment as a matter of law following a jury verdict, the Court should properly ask whether "the state of proof is such that reasonable and impartial minds could reach the conclusion the jury expressed in its verdict." FED. R. CIV. P. 50(b); *see also Am. Home Assur. Co. v. United Space Alliance*, 378 F.3d 482, 487 (5th Cir. 2004). "The grant or denial of a motion for judgment as a matter of law is a procedural issue not unique to patent law, reviewed under the law of the regional circuit in which the appeal from the district court would usually lie." *Finisar Corp. v. DirectTV Group, Inc.*, 523 F.3d 1323, 1332 (Fed. Cir. 2008). "A JMOL may only be granted when, 'viewing the evidence in the light most favorable to the verdict, the evidence points so strongly and overwhelmingly **[*7]** in favor of one party that the court believes that reasonable jurors could not arrive at any contrary conclusion.'" *Versata Software, Inc. v. SAP Am., Inc.*, 717 F.3d 1255, 1261 (Fed. Cir. 2013) (quoting *Dresser-Rand Co. v. Virtual Automation, Inc.*, 361 F.3d 831, 838 (5th Cir. 2004)).

Under Fifth Circuit law, a court is to be "especially deferential" to a jury's verdict, and must not reverse the jury's findings unless they are not supported by substantial evidence. *Baisden v. I'm Ready Prods., Inc.*, 693 F.3d 491, 499 (5th Cir. 2012). "Substantial evidence is defined as evidence of such quality and weight that reasonable and fair-minded men in the exercise of impartial judgment might reach different conclusions." *Threlkeld v. Total Petroleum, Inc.*, 211 F.3d 887, 891 (5th Cir. 2000). A motion for judgment as a matter of law must be denied "unless the facts and inferences point so strongly and overwhelmingly in the movant's favor that reasonable jurors could not reach a contrary conclusion." *Baisden*, 693 F.3d at 498 (citation omitted). However, "[t]here must be more than a mere scintilla of evidence in the record to prevent judgment as a matter of law in favor of the movant." *Arismendez v. Nightingale Home Health Care, Inc.*, 493 F.3d 602, 606 (5th Cir. 2007).

In evaluating a motion for judgment as a matter of law, a court must "draw all reasonable inferences in the light most favorable to the verdict and cannot substitute other inferences that [the court] might regard as more reasonable." *E.E.O.C. v. Boh Bros. Const. Co., L.L.C.*, 731 F.3d 444, 451 (5th Cir. 2013) (citation omitted). However, "[c]redibility determinations, the weighing of the evidence, and the drawing of legitimate **[*8]** inferences from the facts are jury functions, not those of a judge." *Reeves v. Sanderson Plumbing Prods., Inc.*, 530 U.S. 133, 150, 120 S. Ct. 2097, 147 L. Ed. 2d 105 (2000). "[T]he court should give credence to the

evidence favoring the nonmovant as well as that 'evidence supporting the moving party that is uncontradicted and unimpeached, at least to the extent that that evidence comes from disinterested witnesses.'" *Id.* at 151 (citation omitted).

B. Applicable Law Regarding FED. R. CIV. P. 59

Under Federal Rule of Civil Procedure 59(a), a new trial can be granted to any party after a jury trial on any or all issues "for any reason for which a new trial has heretofore been granted in an action at law in federal court." FED. R. CIV. P. 59(a). In considering a motion for a new trial, the Federal Circuit applies the law of the regional circuit. *z4 Techs., Inc. v. Microsoft Corp.*, 507 F.3d 1340, 1347 (Fed. Cir. 2007). "A new trial may be granted, for example, if the district court finds the verdict is against the weight of the evidence, the damages awarded are excessive, the trial was unfair, or prejudicial error was committed in its course." *Smith v. Transworld Drilling Co.*, 773 F.2d 610, 612-13 (5th Cir. 1985). "The decision to grant or deny a motion for a new trial is within the discretion of the trial court and will not be disturbed absent an abuse of discretion or a misapprehension of the law." *Prytania Park Hotel, Ltd. v. General Star Indem. Co.*, 179 F.3d 169, 173 (5th Cir. 1999).

C. Applicable Law Regarding Infringement

To prove infringement under 35 U.S.C. § 271, a plaintiff must show the presence of every element, **[*9]** or its equivalent, in the accused product or service. *Lemelson v. United States*, 752 F.2d 1538, 1551 (Fed. Cir. 1985). First, the claim must be construed to determine its scope and meaning; and second, the construed claim must be compared to the accused device or service. *Absolute Software, Inc. v. Stealth Signal, Inc.*, 659 F.3d 1121, 1129 (Fed. Cir. 2011) (citing *Carroll Touch, Inc. v. Electro Mech. Sys., Inc.*, 15 F.3d 1573, 1576 (Fed. Cir. 1993)). "A determination of infringement is a question of fact that is reviewed for substantial evidence when tried to a jury." *ACCO Brands, Inc. v. ABA Locks Mfr. Co.*, 501 F.3d 1307, 1311 (Fed. Cir. 2007).

D. Applicable Law Regarding Validity

An issued patent is presumed valid. 35 U.S.C. § 282; *Fox Grp., Inc. v. Cree, Inc.*, 700 F.3d 1300, 1304 (Fed. Cir. 2012). Samsung has the burden to show by clear and convincing evidence that the asserted claims were anticipated by or obvious over the prior art. *Microsoft Corp. v. i4i Ltd. P'ship*, 564 U.S. 91, 131 S. Ct. 2238, 2242, 180 L. Ed. 2d 131 (2011). To prevail on judgment as a matter of law, moreover, Samsung must show that no reasonable jury would have a legally sufficient evidentiary basis to find for the Plaintiff. FED. R. CIV. P. 50. "Generally, a party seeking to invalidate a patent as obvious must demonstrate by clear and convincing evidence that a skilled artisan would have had reason to combine the teaching of the prior art references to achieve the claimed invention, and that the skilled artisan would have had a reasonable expectation of success from doing so." *In re Cyclobenzaprine Hydrochoride*, 676 F.3d 1063 (Fed. Cir. 2012) (internal quotation marks omitted).

III. ANALYSIS

A. Non-Obviousness of the Patents-in-Suit

Samsung argues **[*10]** that it presented unrebutted, clear and convincing evidence that the asserted claims are invalid as obvious in view of U.S. Patent No. 5,706,428 ("Boer patent") in combination with other prior art and is therefore entitled to judgment as a matter of law as to obviousness. (Mot. at 3-4.) In particular, Samsung argues that its expert, Dr. Goodman, testified that all but two elements of the asserted claims, including the "different types" of modulation methods, were present in and disclosed by the Boer patent: 1) the use of a master/slave protocol and 2) the requirement in claim 21 of the '228 patent that an address be placed in the first portion of a transmission. (*Id.*) With regard to the use of the "master/slave protocol" and the larger issue of the disclosure of "different types" of modulation methods,

Samsung argues that the Boer patent by itself, as well as in combination with the Lucent Press Release (DX1185), discloses the use of "different types" of modulation methods and that the Upender article (DX1190) in combination with the Boer patent discloses the use of the "master/slave protocol" described in the asserted claims. (*Id.* at 8-16.) As to the requirement in claim 21 of the '228 patent that an address be placed in the first portion **[*11]** of a transmission, Samsung argues that Dr. Goodman testified that this limitation would have been obvious because "placing the address in the header [was] 'a way of saving power'" and the limitation was disclosed in U.S. Patent No. 5,537,398 (the "Siwaik patent"). (*Id.* at 16-19.) Further, Samsung argues that Dr. Goodman provided unrebutted testimony on motivations to combine the identified prior art. (*Id.* at 4.)

Rembrandt responds by arguing that Samsung failed to show that prior art combinations identified disclosed the "different types" of modulation methods, as required by the asserted claims. (Dkt. No. 335 ("Resp.") at 7.) Rembrandt also argues that Samsung failed to show that it would have been obvious to a person of ordinary skill in the art to combine the Boer patent with the Upender article for the use of the master/slave protocol, because Upender teaches against using the master/slave protocol. (*Id.* at 9-13.) Rembrandt further argues that, with respect to claims 2 and 59 of the '580 patent, Dr. Goodman's conclusory statement regarding the claimed "reversion" of the communication back to the first modulation method, as needed, failed to show by clear and convincing evidence that such a limitation existed in the prior art. (*Id.* at 13-15.) With regard to **[*12]** claim 21, Rembrandt argues that the Siwaik patent was non-analogous prior art that was previously considered by the PTO and that Samsung failed to show any disclosure of the "first information . . . first message address data" limitation in the prior art. (*Id.* at 15-16.) Finally, Rembrandt argues that Samsung failed to show that it would have been obvious to a person of ordinary skill in the art to combine all the different pieces of prior art necessary to disclose all elements of the asserted claims. (*Id.* at 17-18.)

For example, Dr. Morrow testified as follows regarding "different [modulation method] types":

> Q. Now, why are those GFSK frequency modulations and DPSK phase modulations we just talked about of a different type under the Court's construction?
>
> A. Well, they're different types, because they're in different families. You notice that frequency modulation is in the frequency family. The frequency is changed with the information. Phase modulation is in the phase family in that the phase is changed in accordance with the information. There are no overlapping characteristics between these two modulation types. So they're in different families and thus different types of modulation.

(2/10/2015 P.M. Trial **[*13]** Tr. (Morrow), Dkt. No. 291 at 18:13-24.)

Further, Dr. Goodman testified that all of the modulation methods disclosed in the Boer patent and the Lucent Press Release vary the "phase" characteristic of a carrier signal. *See* (2/11/2015 P.M. Trial Tr. (Goodman), Dkt. No. 296 at 17:8-13, 34:7-21; 53:1-54:13.)

Additionally, with respect to the Upender article, Dr. Goodman gave the following testimony:

> Q. (By Mr. Heim) And what is shown there, Dr. Goodman, are how polling rates were with respect to these particular conditions, correct?
>
> A. That's — that's what it says, yes.
>
> Q. And if we go to the bottom, the CSMA/CA, and if we highlight that, that row indicates how CSMA/CA fares with respect to those same conditions, correct?
>
> A. That's what they're presenting, yes.
>
> Q. And if we do a comparison between what they're showing for polling and what

they're showing for CSMA/CA, fair to say that the CSMA/CA does better in almost every category, correct?

A. Right. In their applications, yes.

(2/11/2015 P.M. Trial Tr. (Goodman), Dkt. No. 296 at 63:8-20.)

The jury was free to weigh the competing testimony and weigh the credibility of the witnesses. Ultimately, the jury agreed with Rembrandt's expert. After consideration **[*14]** of the admitted evidence, including evidence regarding whether the Boer patent and Lucent Press Release disclosed the limitations for which they are being relied upon, the jury found that the asserted patents were valid. *See* (2/11/2015 P.M. Trial Tr. (Goodman), Dkt. No. 296 at 17:8-13, 34:7-21; 53:1-54:13.) The Court will not substitute its judgment for that of the jury. Applying the clear and convincing standard, the jury found that the patents-in-suit were not invalid. The Court does not find that no reasonable jury could have found the asserted patents were valid based on the presented evidence. Accordingly, Samsung's Motion for Judgment as a Matter of Law in regard to obviousness is **DENIED**.

B. The Construction of Modulation Methods "of a Different Type"

The Court previously addressed the issues of the proper construction of the terms, "modulation method [] of a different type" and "different types of modulation methods," as raised by Samsung in this Motion. *See* (Dkt. No. 114 at 22-29). For the reasons set forth below, the Court declines to grant new trial on these re-urged issues of claim construction.

On July 10, 2014, the Magistrate Judge issued a substantial and carefully reasoned **[*15]** Claim Construction Memorandum Order and Opinion after carefully considering the Parties' arguments, the patent, and the proper intrinsic and extrinsic evidence. *See* (Dkt. No. 114). Now, after trial has completed and a verdict had been returned, Samsung seeks to reopen the claim construction issues previously addressed.

These issues have already received full and fair treatment. In the Claim Construction Order, the Magistrate Judge considered essentially the same arguments raised by Samsung in the current motion. *See* (Dkt. No. 114 at 22-24.) After considering both Parties' arguments and the language of the patent, the Magistrate Judge declined to adopt the **same** construction now put forward by Samsung. *See* (Dkt. No. 114 at 22.) That decision, when made, was not clearly erroneous or contrary to the law and has not since created such prejudicial error that new trial is warranted. Accordingly, Samsung's Motion for New Trial, based upon an allegedly incorrect claim construction, is **DENIED**.

C. Judgment as a Matter of Law as to Non-Infringement of Claims 1, 19, 23, 29, 41, 52, and 58 of the '580 Patent and Claims 1, 26, 28, 29, 50, and 51 of the '228 Patent

Samsung requests Judgment as a Matter of Law as to non-infringement **[*16]** of claims 1, 19, 23, 29, 41, 52, and 58 of the '580 patent and claims 1, 26, 28, 29, 50, and 51 of the '228 patent (collectively, the "dropped claims"). (Mot. at 28-30.) More specifically, Samsung argues that the claims were withdrawn on the eve of trial, and therefore, no evidence of infringement was presented on these dropped claims. (*Id.*) Rembrandt responds that the present motion is an improper vehicle for Samsung's request and is also untimely. (Resp. at 29-30.) In particular, Rembrandt argues that these counter-claims of non-infringement were no longer live once Rembrandt filed notice of the dropped claims and thus, were never submitted to the jury. (*Id.*)

The Court finds that Samsung's request should be **DENIED**. Federal Rule of Civil Procedure 50 is clear that relief under this Rule may be appropriate only "**[i]f a party has been fully heard on an issue during a jury trial**" and if certain other conditions are met. FED. R. CIV. P. 50(a) (emphasis added). In this case, neither party was heard, let alone fully heard, on the issue of either infringement or non-infringement regarding the dropped claims. Accordingly, Rule 50

relief is inappropriate and Samsung's Motion is **DENIED** with regard to such dropped claims.

IV. CONCLUSION

For the reasons set forth above, the Court finds **[*17]** no compelling basis upon which the jury's verdict with regard to liability should be disturbed. The jury's verdict in this respect is supported by substantial evidence and should stand unchanged by this Court. Further, the Court finds that Samsung is not entitled to a new trial on liability. Accordingly, Samsung's Rule 50(b) Renewed Motion for Judgment as a Matter of Law and/or Rule 59(a) Motion for New Trial on Liability Issues (Dkt. No. 329) is in all things **DENIED**.

So ORDERED and SIGNED this 17th day of February, 2016.

/s/ Rodney Gilstrap

RODNEY GILSTRAP

UNITED STATES DISTRICT JUDGE

Source: **Combined Source Set 3 - Patent Cases from Federal Courts**
Terms: **8457228 OR 8,457,228** (Suggest Terms for My Search)
View: Full
Date/Time: Thursday, September 15, 2016 - 11:31 AM EDT

* Signal Legend:
- Warning: Negative treatment is indicated
- Questioned: Validity questioned by citing refs
- Caution: Possible negative treatment
- Positive treatment is indicated
- Citing Refs. With Analysis Available
- Citation information available
* Click on any *Shepard's* signal to *Shepardize*® that case.

LexisNexis® About LexisNexis | Privacy Policy | Terms & Conditions | Contact Us
Copyright © 2016 LexisNexis, a division of Reed Elsevier Inc. All rights reserved. RELX Group™

REMBRANDT WIRELESS TECHNOLOGIES, LP, Plaintiff, v. SAMSUNG ELECTRONICS CO., LTD., SAMSUNG ELECTRONICS AMERICA, INC., AND SAMSUNG AUSTIN SEMICONDUCTOR, LLC, Defendants.

CASE NO. 2:13-cv-213-JRG

UNITED STATES DISTRICT COURT FOR THE EASTERN DISTRICT OF TEXAS, MARSHALL DIVISION

2016 U.S. Dist. LEXIS 10590

January 29, 2016, Decided
January 29, 2016, Filed

PRIOR HISTORY: Rembrandt Wireless Techs., LP v. Samsung Elecs. Co., 2014 U.S. Dist. LEXIS 93645 (E.D. Tex., July 10, 2014)

CORE TERMS: chip, new trial, royalty, patented, matter of law, patent, functionality, incremental, technology, patents-in-suit, jury verdict, negotiation, license, hypothetical, damages award, reasonable jury, royalty rate, infringement, reliability, patentee, renewed, time period, settlement, quantity, present case, license agreement, substantial evidence, citation omitted, fiscal quarters, calculations

COUNSEL: **[*1]** Paul Michel, Mediator, Pro se, Alexandria, VA.

For William Jospeh Cornelius, Jr, Mediator: William Joseph Cornelius, Jr, Wilson Robertson & Cornelius PC, Tyler, TX.

David Keyzer, Technical Advisor, Pro se, El Dorado Hills, CA.

For Rembrandt Wireless Technologies LP, Plaintiff, Counter Defendant: Demetrios Anaipakos, LEAD ATTORNEY, Alisa Anne Lipski, Brian Ervin Simmons, Kyril Vladimir Talanov, Ahmad, Zavitsanos, Anaipakos, Alavi & Mensing P.C., Houston, TX; Alden Harris, PRO HAC VICE, Heim, Payne & Chorush, LLP-Houston, Houston, TX; Amir H. Alavi, Jamie Alan Aycock, Ahmad Zavitsanos & Anaipakos - Houston, Houston, TX; Blaine Andrew Larson, Eric James Enger, Michael F Heim, Sean R D Gorman, Miranda Yan Jones, Heim, Payne & Chorush, LLP-Houston, Houston, TX; Claire Abernathy Henry, Jack Wesley Hill, Robert Allan Bullwinkel, Thomas John Ward, Jr, Ward, Smith & Hill, PLLC, Longview, TX.

For Samsung Electronics Co LTD, Samsung Electronics America Inc, Sansung Telecommunications America LLC, Samsung Austin Semiconductor LLC, Defendants, Counter Claimants: Jeffrey Kirk Sherwood, LEAD ATTORNEY, Venable LLP, Washington, DC; Brian P Biddinger, Deanne K Cevasco, Jesse J Jenner, Vincent Y Ling, Ropes **[*2]** & Gray - New York, New York, NY; Daniel G Cardy, Dickstein Shapiro, LLP- DC, Washington, DC; Rebecca R Hermes, PRO HAC VICE, Gabrielle Elizabeth Higgins, Ropes & Gray - East Palo Alto, East Pala Alto, CA; Gerard A Haddad, PRO HAC VICEJennifer BianRosa, Dickstein Shapiro LLP - New York, New York, NY; Jeffrey A Miller, Dickstein Shapiro LLP - Palo Alto, Palo Alto, CA; Ji Young Park, PRO HAC VICE, Dickstein Shapiro - DC, Washington, DC; Michael Charles Smith, Siebman Burg Phillips & Smith, LLP-Marshall, Marshall, TX.

For Research In Motion Corporation, Research in Motion Ltd, Defendants, Counter Claimants:

Richard S J Hung, LEAD ATTORNEY, Morrison & Foerster LLP San Francisco, San Francisco, CA Vincent J Belusko, LEAD ATTORNEY, Jared W Miller, Morrison & Foerster LLP - Los Angeles, Los Angeles, CA; Edgar Leon Carter, John Steven Torkelson, Carter Scholer Arnett Hamada & Mockler PLLC, Dallas, TX; James Ryan Gilfoil Lucia Elena Ballard, Morrison & Foerster LLP - San Francisco, San Francisco, CA.

JUDGES: RODNEY GILSTRAP, UNITED STATES DISTRICT JUDGE.

OPINION BY: RODNEY GILSTRAP

OPINION

MEMORANDUM OPINION AND ORDER

Before the Court is Samsung Defendants' ("Samsung") Rule 50(b) Renewed Motion for Judgment as a Matter of Law and/or **[*3]** Rule 59(a) Motion for New Trial on Damages Issues ("Mot.", Dkt. No. 328). The Court heard argument on November 3, 2015. For the reasons set forth below, Samsung's Rule 50(b) Renewed Motion for Judgment as a Matter of Law and/or Rule 59(a) Motion for New Trial on Damages Issues is **DENIED**[1] .

FOOTNOTES

1 The Court notes that Samsung has also filed a Motion for Judgment as a Matter of Law and/or Rule 59(a) Motion for a New Trial on Liability Issues such is still pending before this Court (Dkt. No. 329).

I. BACKGROUND

The Court held a jury trial in this case, and the jury entered a verdict on February 13, 2015. The asserted claims of U.S. Patent No. 8,023,580 ("the '580 Patent") and U.S. Patent No. **8,457,228** ("the '228 Patent"), the two patents-in-suit, involve a system in which devices can communicate with each other on the same network using different modulation methods. The jury returned a verdict that the asserted claims were infringed and not invalid, and it awarded $15.7 million in damages[2] to Plaintiff Rembrandt Wireless Technologies, LP ("Rembrandt"). ("Verdict", Dkt. No. 288.) Samsung now asserts that the jury did not have sufficient evidence for its findings. Samsung offers two main arguments in support of its contention that Rembrandt did not present sufficient evidence to support the jury's damages award. First, Samsung **[*4]** argues that Mr. Roy Weinstein, Rembrandt's damages expert, analyzed the prices of chips unrelated to the accused Samsung products, improperly isolated chip price data, and failed to correctly apportion between patented and unpatented features of the Bluetooth technology at issue in this case. Second, Samsung argues that Mr. Weinstein relied on a license agreement provision that Rembrandt unilaterally created for litigation purposes. Additionally, Samsung alleges that the jury simply reached a compromise verdict.

FOOTNOTES

2 Samsung asserted at trial that, if damages were awarded, the proper amount of damages should not exceed $500,000.

In the alternative, Samsung contends that it is entitled to a new trial on damages because the Court made multiple erroneous evidentiary rulings. Having considered the parties' briefing, arguments, and the entire record, the Court is persuaded that Rembrandt introduced

substantial evidence that is more than adequate to support the jury's damages verdict. The Court also concludes that Samsung is not entitled to a new trial on the issue of damages.

II. LEGAL STANDARD

A. Applicable Law Regarding FRCP 50

Upon a party's renewed motion for judgment as a matter of law following a **[*5]** jury verdict, the Court should properly ask whether "the state of proof is such that reasonable and impartial minds could reach the conclusion the jury expressed in its verdict." FRCP 50(b); *see also Am. Home Assur. Co. v. United Space Alliance*, 378 F.3d 482, 487 (5th Cir. 2004). "The grant or denial of a motion for judgment as a matter of law is a procedural issue not unique to patent law, reviewed under the law of the regional circuit in which the appeal from the district court would usually lie." *Finisar Corp. v. DirecTV Group, Inc.*, 523 F.3d 1323, 1332 (Fed. Cir. 2008). "A JMOL may only be granted when, 'viewing the evidence in the light most favorable to the verdict, the evidence points so strongly and overwhelmingly in favor of one party that the court believes that reasonable jurors could not arrive at any contrary conclusion.'" *Versata Software, Inc. v. SAP Am., Inc.*, 717 F.3d 1255, 1261 (Fed. Cir. 2013) (quoting *Dresser-Rand Co. v. Virtual Automation, Inc.*, 361 F.3d 831, 838 (5th Cir. 2004)).

Under Fifth Circuit law, a court is to be "especially deferential" to a jury's verdict, and must not reverse the jury's findings unless they are not supported by substantial evidence. *Baisden v. I'm Ready Prods., Inc.*, 693 F.3d 491, 499 (5th Cir. 2012). "Substantial evidence is defined as evidence of such quality and weight that reasonable and fair-minded men in the exercise of impartial judgment might reach different conclusions." *Threlkeld v. Total Petroleum, Inc.*, 211 F.3d 887, 891 (5th Cir. 2000). A motion for judgment as a matter of law must be denied "unless the facts and inferences point so strongly and overwhelmingly in the movant's **[*6]** favor that reasonable jurors could not reach a contrary conclusion." *Baisden*, 693 F.3d at 498 (citation omitted). However, "[t]here must be more than a mere scintilla of evidence in the record to prevent judgment as a matter of law in favor of the movant." *Arismendez v. Nightingale Home Health Care, Inc.*, 493 F.3d 602, 606 (5th Cir. 2007).

In evaluating a motion for judgment as a matter of law, a court must "draw all reasonable inferences in the light most favorable to the verdict and cannot substitute other inferences that [the court] might regard as more reasonable." *EEOC v. Boh Bros. Const. Co., L.L.C.*, 731 F.3d 444, 451 (5th Cir. 2013) (citation omitted). However, "[c]redibility determinations, the weighing of the evidence, and the drawing of legitimate inferences from the facts are jury functions, not those of a judge." *Reeves v. Sanderson Plumbing Prods., Inc.*, 530 U.S. 133, 150, 120 S. Ct. 2097, 147 L. Ed. 2d 105 (2000). "[T]he court should give credence to the evidence favoring the nonmovant as well as that 'evidence supporting the moving party that is uncontradicted and unimpeached, at least to the extent that that evidence comes from disinterested witnesses.'" *Id.* at 151 (citation omitted).

B. Applicable Law Regarding FRCP 59

Under FRCP 59(a), a new trial can be granted to any party after a jury trial on any or all issues "for any reason for which a new trial has heretofore been granted in an action at law in federal court." FRCP 59(a). In considering a motion for a new trial, the Federal Circuit applies the law **[*7]** of the regional circuit. *z4 Techs., Inc. v. Microsoft Corp.*, 507 F.3d 1340, 1347 (Fed. Cir. 2007). "A new trial may be granted, for example, if the district court finds the verdict is against the weight of the evidence, the damages awarded are excessive, the trial was unfair, or prejudicial error was committed in its course." *Smith v. Transworld Drilling Co.*, 773 F.2d 610, 612-13 (5th Cir. 1985). "The decision to grant or deny a motion for a new trial is within the discretion of the trial court and will not be disturbed absent an abuse of discretion or a misapprehension of the law." *Prytania Park Hotel, Ltd. v. General Star Indem. Co.*, 179 F.3d 169, 173 (5th Cir. 1999).

C. Applicable Law Regarding Damages

Upon a showing of infringement, a patentee is entitled to an award of damages "adequate to compensate for the infringement, but in no event less than a reasonable royalty for the use made of the invention by the infringer, together with interest and costs as fixed by the court." 35 U.S.C. § 284. However, "[t]he burden of proving damages falls on the patentee." *Lucent Techs., Inc. v. Gateway, Inc.*, 580 F.3d 1301, 1324 (Fed. Cir. 2009). There are two alternative categories of damages typically recovered in a patent case: the patentee's lost profits or the "reasonable royalty [the patentee] would have received through arms-length bargaining." *Id.* In this case, Rembrandt sought a reasonable royalty.

To determine an appropriate reasonable royalty, patentees (and courts) commonly employ the hypothetical **[*8]** negotiation, or "willing licensor-willing licensee" model. *Id.* at 1324-25. The hypothetical negotiation "attempts to ascertain the royalty upon which the parties would have agreed had they successfully negotiated an agreement just before infringement began" with the assumption that the patent is valid, enforceable, and infringed. *Id.*; *see also Georgia-Pacific Corp. v. U.S. Plywood Corp.*, 318 F. Supp. 1116, 1120 (S.D.N.Y. 1970); *Rite-Hite Corp. v. Kelley Co.*, 56 F.3d 1538, 1554 n.13 (Fed. Cir. 1995) (en banc).

Such a reasonable royalty analysis "necessarily involves an element of approximation and uncertainty." *Unisplay, S.A. v. Am. Elec. Sign Co.*, 69 F.3d 512, 517 (Fed. Cir. 1995). However, the Court must ensure that a jury's damages award is supported by substantial evidence. *Id.* Generally, the Court should uphold a jury's damages award "unless 'grossly excessive or monstrous,' clearly not supported by the evidence, or based only on speculation or guesswork." *Energy Transp. Group, Inc. v. William Demant Holding A/S*, 697 F.3d 1342, 1356 (Fed. Cir. 2012).

III. ANALYSIS

At trial, Rembrandt based its damages analysis on the value of Enhanced Data Rate ("EDR") functionality in Bluetooth devices[3] and presented its damages theory through the testimony of Mr. Weinstein. Mr. Weinstein compared the prices of two Texas Instruments ("TI") chips over two fiscal quarters: one chip included EDR functionality, and the other did not. (2/10/2015 P.M. (Sealed) Trial Tr., Dkt. No. 294 at 3:16-18, 4:14-17.) He used such cost comparison **[*9]** to identify the incremental value associated with implementing the EDR functionality to fall between 8.5 and 18.9 percent. (*Id.* at 6:24-7:16.) Mr. Weinstein then took this percentage difference in the price of the TI chips and applied it to the price of chips that Samsung actually purchased for its devices. (*Id.* at 9:20-23.) Employing this formula, Mr. Weinstein arrived at a royalty rate of between 5 and 11 cents per device. (*Id.* at 11:24-12:5.) Mr. Weinstein's final step was to apply his royalty rate calculations to the total number of accused Samsung sales during the damages period. (2/10/2015 P.M. Trial Tr., Dkt. No. 293 at 133:21-24.) Specifically, he multiplied the 5-cent and 11-cent royalty rates by 290 million devices to arrive at a range of $14.5 to $31.9 million in total damages. (*Id.* at 134:8-11.) Additionally, Mr. Weinstein incorporated a license agreement between Rembrandt and BlackBerry covering the patents-in-suit ("BlackBerry-Rembrandt Agreement") to confirm his damages analysis. (2/10/2015 P.M. (Sealed) Trial Tr., Dkt. No. 294 at 17:13-15.) Mr. Weinstein assessed the agreement's structure and determined that, during what he found to be the relevant time period, Rembrandt **[*10]** licensed its patent rights to BlackBerry at a per-unit rate that supported Mr. Weinstein's ultimate damages conclusions in the present case. (*Id.* at 19:3-7, 20:20-23.)

FOOTNOTES

3 Rembrandt asserted that the patented technology at issue consists of "embedded modulations," and "[w]ithout embedded modulation, [EDR] does not work." (2/9/2015 P.M. Trial Tr., Dkt. No. 290 at 37, 43.) Rembrandt further stated that "the evidence will be that Samsung cannot make a Bluetooth EDR device without infringing [the patents-in-suit]. Why? Because embedded modulation is the heart of enhanced data rate." (*Id.* at 178.)

As discussed above, the jury awarded Rembrandt $15.7 million in damages. Samsung now argues that no reasonable jury could have found Samsung liable for that amount. Moreover, Samsung asserts that it is entitled to a new trial because of allegedly erroneous decisions made by the Court.

A. Rembrandt Introduced Sufficient Evidence to Support the Jury's Damages Award

At the outset, the Court notes that many arguments raised in Samsung's Renewed Motion for Judgment as a Matter of Law merely re-urge Samsung's previously-filed *Daubert* challenges. *See, e.g.*, (Dkt. No. 189.) In *Versata*, the Federal Circuit found such practice to **[*11]** be improper and rejected the defendant's JMOL arguments directed toward admissibility of expert testimony. *Versata Software Inc. v. SAP America Inc.*, 717 F.3d 1255, 1264 (Fed. Cir. 2013). The Federal Circuit held that a JMOL is not the appropriate context for renewing attacks on an expert's methodology:

> Under the guise of sufficiency of the evidence, [Defendant] questions the admissibility of [Plaintiff's] expert testimony and whether his damages model is properly tied to the facts of the case. Such questions should be resolved under the framework of the Federal Rules of Evidence and through a challenge under *Daubert v. Merrell Dow Pharms., Inc.*, 509 U.S. 579, 113 S. Ct. 2786, 125 L. Ed. 2d 469 (1993).

Id.

In the present case, Samsung's pre-trial *Daubert* challenge to exclude Mr. Weinstein's opinions included the following subject matter: the reliability of an allocation provision in the BlackBerry-Rembrandt Agreement; Mr. Weinstein's analysis of the two TI chips; Mr. Weinstein's comparison of the cost differences between the TI chips; Mr. Weinstein's selection of two fiscal quarters from which to evaluate TI chip price data; and Mr. Weinstein's method of apportionment. (Dkt. No. 189.) The Court denied Samsung's challenges. (Dkt. No. 265.) Samsung did not move for reconsideration of the Court's rulings. Instead, similarly to the defendant in *Versata*, Samsung **[*12]** has repeated these arguments in its current JMOL motion and argued at the post-trial hearing that Mr. Weinstein's testimony "shouldn't have been allowed in front of the jury in the first place." (11/3/2015 Tr., Dkt. No. 349 at 63:8-19.) Samsung has followed the same path that *Versata* teaches away from, and such disregard for the Federal Circuit's guidance should not be rewarded or overlooked.

Accordingly, to the extent that Samsung now merely re-urges its prior *Daubert* arguments, the Court rejects such as improper. To the extent, if any, that Samsung does not, the Court will address the merits of Samsung's current motion below.

1. Rembrandt's TI Chip Price Analysis

Samsung argues that no reasonable jury could rely on Rembrandt's TI chip price analysis because Mr. Weinstein's comparison of the two chips was "irrelevant and unreliable." (Mot. at 3.) Samsung first asserts that none of the Samsung products at issue in this case used the TI chips that Mr. Weinstein evaluated, and that, in fact, a price comparison of the chips that Samsung does use would demonstrate that EDR has zero incremental value. (*Id.* at 3-4.) Samsung further challenges Mr. Weinstein's selection of two fiscal quarters of TI price **[*13]** data to use as the basis for his price comparison. (*Id.* at 4.) Samsung notes that "[o]ver a period of 20 quarters, the two quarters selected by Mr. Weinstein were two of only four quarters in which the TI chip with EDR was more expensive than the TI chip without EDR" and alleges that Mr. Weinstein failed to account for a massive volume difference in the quantity of EDR and non-EDR chips sold during those quarters. (*Id.*)

Samsung also argues that Mr. Weinstein's methodology failed to correctly apportion between

the patented and unpatented features of the TI Bluetooth chips. (*Id.* at 5.) Specifically, Samsung contends that Mr. Weinstein improperly attributed the entire price difference between the two TI chips to EDR functionality, overlooking various other reasons for differences in price. (*Id.*) Finally, Samsung asserts that Mr. Weinstein should have considered the incremental profit associated with including EDR functionality rather than simply the incremental cost of incorporating it. (*Id.* at 6.)

Rembrandt responds by arguing that "the Jury was entitled to rely on unrebutted testimony that the [TI] chips . . . provided the best comparison for isolating the patented technology." ("Resp.", Dkt. No. 336 at 1.) Rembrandt **[*14]** notes that, while Samsung heavily criticized the TI chips at trial, it failed to present alternative evidence that another pair of chips could provide a better comparison. (*Id.* at 5.)

Significantly, Rembrandt asserts that Mr. Weinstein properly relied upon the conclusion of Rembrandt's technical experts, Dr. Robert Morrow and Dr. Chris Jones, that the principal difference between the TI chips was the introduction of EDR functionality. (*Id.* at 6.) At trial, Mr. Weinstein testified as follows:

> QUESTION: How did you determine which chips to compare?
>
> ANSWER: I relied on the technical experts, Dr. Morrow and Dr. Jones. [. . .] I wanted . . . the best two chips that they could identify where we would have this information where essentially the only difference between the two was the inclusion of EDR functionality. And after discussing this with them and looking at documents, they said that these are the two chips where essentially the only difference is the inclusion of EDR functionality in one.

(2/10/2015 P.M. Trial Tr. (Weinstein), Dkt. No. 293 at 131:2-4, 14-21.) Rembrandt also argues that it provided sufficient evidence for the jury to conclude that the two quarters Mr. Weinstein relied on for TI chip price **[*15]** data were the two most relevant quarters for his analysis, and any volume differences between the two chips did not impact price. (Resp. at 6-7.) Specifically, Mr. Weinstein testified at trial that a comparison of the third and fourth quarters of 2006 provided the best comparison for evaluating an increase in chip price due to the introduction in EDR:

> ANSWER: I picked those two quarters because according to Texas Instruments . . . those are the first times that the [TI chip] with EDR was actually offered in what they call production level quantities, sufficient quantities—quantities to be meaningful.
>
> ...
>
> QUESTION: Okay. Now, why didn't you use pricing for these TI chips in 2011, 2012, 2013? Why did you focus on when the product was first introduced in production volumes?
>
> ANSWER: Well, if I were to try and do this later on . . . there would have been a lot of other changes going on in the chips. And so it would not have been possible to separate out or apportion out for all of those other changes. It was only by looking at these chips when they were first introduced at production level quantities that I was able to specifically identify the incremental contribution associated with including **[*16]** EDR.

(2/10/2015 P.M. (Sealed) Trial Tr. (Weinstein), Dkt. No. 294 at 7:3-9, 8:8-19.)

Additionally, Rembrandt argues that Mr. Weinstein properly apportioned the value of the patented features by identifying the smallest saleable unit (the Bluetooth chip) and then further isolating only the incremental value of EDR. (Resp. at 8.) Rembrandt again points to Dr. Morrow

and Dr. Jones' determination that the addition of EDR was the sole meaningful difference between the two TI chips. (*Id.* at 9.) Lastly, Rembrandt contends that Mr. Weinstein's testimony provided a sufficient basis for reasonable jurors to conclude that, in a hypothetical negotiation, Samsung would have been willing to pay Rembrandt the incremental cost of implementing the EDR functionality. (*Id.* at 10.)

The Court is not persuaded by Samsung's post-verdict attack on Rembrandt's damages theory. Challenges to methodology and reliability fall squarely into the purview of *Daubert*. Even if the Court ignores this glaring problem with Samsung's argument, it is clear that Mr. Weinstein was entitled to rely upon the technical analysis and conclusions of Dr. Morrow and Dr. Jones that the TI chips provided the best benchmark when constructing his damages **[*17]** model and presenting it to the jury. This remains true even if Samsung may not have used the two TI chips in its products at issue. *See Apple Inc. v. Motorola, Inc.*, 757 F.3d 1286, 1321 (Fed. Cir. 2014) (partly overruled on other grounds) ("Experts routinely rely upon other experts hired by the party they represent for expertise outside of their field."). Moreover, Mr. Weinstein thoroughly explained the reasoning behind his election to use data from two fiscal quarters as the foundation for his chip price comparison. Samsung clearly disagreed with his reasoning and, in response, vigorously cross-examined Mr. Weinstein on these matters and presented rebuttal testimony to the jury from its own damages expert. The jury was free to judge the credibility of all of the experts and determine who had persuaded them when awarding damages. *Kinetic Concepts, Inc. v. Smith & Nephew, Inc.*, 688 F.3d 1342, 1362 (Fed. Cir. 2012) (citation omitted). The Court concludes that Rembrandt's TI chip price analysis was appropriately tied to the facts of the case and supports the jury's verdict.

Further, the Court does not find that Mr. Weinstein failed to properly apportion between the patented and unpatented features of the Bluetooth chips. Mr. Weinstein repeatedly explained how his method of apportionment accounted for non-infringing features. (2/10/2015 **[*18]** P.M. (Sealed) Trial Tr., Dkt. No. 294 at 12:12-14:25.) As noted in the Court's Order denying Defendants' Motion to Exclude, "it appears Defendants' primary dispute with Mr. Weinstein's report and testimony lies in the underlying technical analysis performed by Dr. Morrow when comparing the [TI] chips—*i.e.*, whether the entire incremental cost difference of the two should be attributed solely to EDR, or if additional benefits should be discounted in the analysis." (Dkt. No. 243 at 6.) Samsung did not move to exclude Dr. Morrow's report during pre-trial, and it had (and exercised) the opportunity to thoroughly cross-examine both him and Dr. Jones at trial. The Court concludes that, contrary to Samsung's arguments, Rembrandt adequately estimated the "portion of the value" of the Bluetooth chips "attributable to the patented technology." *VirnetX, Inc. v. Cisco Sys. Inc.*, 767 F.3d 1308, 1327 (Fed. Cir. 2014).

Finally, the Court does not agree that Mr. Weinstein inappropriately inflated his damages calculations by using the incremental cost of incorporating EDR functionality to determine a reasonable royalty amount. Mr. Weinstein explained how he used the chip price comparison to isolate the value of the patented technology as well as how he accounted for price **[*19]** changes over time. (2/10/2015 P.M. (Sealed) Trial Tr., Dkt. No. 294 at 11:2-12:5.) The Court does not find that no reasonable jury could have accepted his testimony that Samsung would have agreed to this measure of value in a hypothetical negotiation. Avoiding the double negative, the Court finds that a reasonable jury (and in this case—this jury) could have reasonably accepted Mr. Weinstein's testimony that Samsung would have agreed to this measure of value in a hypothetical negotiation. *See Ericsson, Inc. v. D-Link Sys., Inc.*, 773 F.3d 1201, 1226 (Fed. Cir. 2014) ("When the accused infringing products have both patented and unpatented features, measuring this value requires a determination of the value added by such features . . . [t]he essential requirement is that the ultimate reasonable royalty award must be based on the incremental value that the patented invention adds to the end product.").

2. The Allocation Clause in the BlackBerry-Rembrandt Settlement Agreement

Samsung also challenges the reliability of an allocation clause in the BlackBerry-Rembrandt Settlement Agreement that Mr. Weinstein used as evidence to support his damages analysis.

(Mot. at 7.) Under the BlackBerry-Rembrandt Agreement, BlackBerry agreed to pay Rembrandt a settlement amount for a limited license covering the damages period prior to November 12, **[*20]** 2014, as well as for a five-year standstill period. (*Id.*) The Agreement includes a provision that allocates the payments Rembrandt received from BlackBerry into three different time periods: (1) sales prior to the date of the lawsuit during the infringement period; (2) sales after the lawsuit was filed until the date of the settlement agreement; and (3) a future five-year standstill agreement. (2/10/2015 P.M. (Sealed) Trial Tr., Dkt. No. 294 at 17:21-18:14.) Immediately following the allocation clause is the following sentence: "BlackBerry does not agree to an allocation of the payment." (Mot. at 7.) Notwithstanding this sentence, Mr. Weinstein evaluated the second time period in the allocation clause to derive an effective royalty rate from the BlackBerry-Rembrandt license that supported his ultimate damages conclusions in the present case. (*Id.* at 19:1-7, 20:20-23.)

Samsung argues that the allocation provision "is not a reliable measure of the value of the patents-in-suit" because the Agreement states that BlackBerry did not agree to the provision. (Mot. at 7.) Samsung alleges that the per-unit royalty that Mr. Weinstein derived from the BlackBerry-Rembrandt Agreement was "an arbitrary **[*21]** number chosen by Rembrandt for litigation purposes." (*Id.* at 8.) Samsung also contends that Mr. Weinstein provided no basis for considering only the second allocated time period in calculating the per-unit royalty and offered no rationale for converting the Agreement's lump sum payment into a running royalty. (*Id.* at 9.)

Rembrandt responds by arguing that "BlackBerry implicitly affirmed the allocation by paying the amount that was due using the stated allocation, including increasing the settlement amount consistently with the allocation each day that the negotiations continued." (Resp. at 11.) Rembrandt notes that BlackBerry did not object to the inclusion of the allocation provision in the Agreement and states that BlackBerry only included the statement at issue to avoid implications in other litigation. (*Id.*) Further, Rembrandt asserts that the Blackberry-Rembrandt Agreement is the sole license specific to the patents-in-suit, therefore increasing its relevance to the current case. (*Id.* at 12.) At trial, Mr. Weinstein testified that he relied only upon the second allocated time period because BlackBerry had a live defense related to pre-litigation damages that would have impacted Rembrandt's ability to collect **[*22]** damages for that first allocated period. (2/10/2015 P.M. (Sealed) Trial Tr., Dkt. No. 294 at 20:25-21:5.)

Having considered the entire record, the Court disagrees with Samsung. Although differences certainly exist in the structure of the BlackBerry-Rembrandt Agreement and Rembrandt's reasonable royalty damages model, the Court concludes that a reasonable basis for comparing the two frameworks exists and that Mr. Weinstein's analysis was relevant to the facts of this case. *See Lucent Techs.*, 580 F.3d at 1330.

At trial, Mr. Weinstein explained why he found the allocation provision in the BlackBerry-Rembrandt Agreement to be a reliable source of evidence and how he used that provision to derive a royalty rate supporting his independent damages calculations. (2/10/2015 P.M. (Sealed) Trial Tr., Dkt. No. 294 at 19:11-21:5.) Samsung strongly disputed the reliability of the allocation provision through lengthy cross-examination, rebuttal expert testimony and the presentation of alternative license agreements. The jury was entitled to weigh all of the evidence presented at trial and decide which evidence it found to be most relevant and credible. *See Finjan, Inc. v. Secure Computing Corp.*, 626 F.3d 1197, 1212 (Fed. Cir. 2010) (citing *i4i Ltd. P'ship, Infrastructures for Info. Inc. v. Microsoft Corp.*, 598 F.3d 831, 856 (Fed. Cir. 2010)). After such evaluation, the jury found for Rembrandt. The Court **[*23]** does not find that no reasonable jury could have relied upon Mr. Weinstein's per-unit royalty analysis derived from the BlackBerry-Rembrandt Agreement. Where a jury is presented with two conflicting positions at trial and there is reasonable evidence and argument to support both positions, the fact that the jury ultimately sided with one party over the other does not support entry of JMOL. Such is the position in which Samsung finds itself in this case.

3. The Jury's Damages Award

Samsung alleges that the jury simply "split the difference" between Rembrandt and Samsung's competing damages calculations to arrive at an "arbitrary" award. (Mot. at 10-11.) Samsung alleges that Mr. Weinstein provided the jury with no evidence or guidance in selecting an amount within his proposed damages range and that the speed with which the jury returned its verdict implies that the jury rendered a quick compromise decision.[4] (*Id.* at 11.) Samsung asserts that a reasonable jury could not have awarded damages exceeding the $500,000 amount proposed by their damages expert, Dr. Stephen Becker. (*Id.* at 12-13.) In response, Rembrandt argues that there is no indication that the jury applied an inappropriate method in arriving at a **[*24]** damages amount and that, in fact, it was reasonable for the jury to award damages within the range presented by Mr. Weinstein. (Resp. at 16 (quoting *Versata Software*, 717 F.3d at 1268 ("While the jury awarded less than the $170 million calculated by SAP's expert, the jury is not bound to accept the maximum proffered award and may choose an intermediate rate.")).) Additionally, Rembrandt disputes the reliability of Dr. Becker's testimony, primarily because he "failed to consider the only license limited to the patents-in-suit . . . ." (*Id.* at 19-20.)

FOOTNOTES

4 The jury deliberated for about an hour before returning the verdict. (Mot. at 11.)

Mr. Weinstein concluded that an appropriate damages amount would be between $14.5 and $31.9 million. (2/10/2015 P.M. Trial Tr., Dkt. No. 293 at 139:10-14.) The jury ultimately awarded $15.7 million in damages—a number near the low end of Rembrandt's request. As discussed above, the Court finds that substantial evidence supports the jury's verdict. Having considered all of the record evidence, the Court concludes that the jury reached a reasoned and supportable decision and declines to disturb the jury's judgment. Consequently, Samsung's motion for judgment as a matter of law or, alternatively, a new trial **[*25]** as to damages based upon any of the above arguments should be denied.

B. Samsung is Not Entitled to a New Trial

In addition to the arguments discussed above, Samsung alternatively asserts that "the Court's *sua sponte* actions and exclusion of evidence" warrant a new trial on damages.

1. The BlackBerry-Rembrandt Agreement

Samsung repeats its contentions that the allocation clause in the BlackBerry-Rembrandt Agreement is unreliable and that the Agreement itself is irrelevant to the facts of this case. (Mot. at 13.) Samsung further contends that the Court's ruling allowing introduction of the Agreement without the specific payment and allocation terms was "clearly erroneous." (*Id.*) Samsung argues that, without the dollar amounts, the Agreement has no relevance. (*Id.* at 14.) Samsung also claims that redacting the payment terms prejudiced its ability to cross-examine Mr. Weinstein because the amount of the lump-sum payment would have served as a check on the reasonableness of Rembrandt's requested damages amount. (*Id.*)

In response, Rembrandt reiterates that the BlackBerry-Rembrandt Agreement is the only license that specifically focuses on the patented technology at issue in this case and does not cover **[*26]** an entire portfolio. (Resp. at 20-21.) Rembrandt notes that the Court did not redact the payment terms *sua sponte* but instead did so in response to BlackBerry's motion "requesting to protect against disclosure of the payment amount and Rembrandt's allocation in the agreement." (*Id.* at 22.) Finally, Rembrandt argues that including the dollar amounts would have served no purpose but to prejudice Rembrandt by unfairly anchoring the jury. (*Id.*)

The Court finds that the most relevant aspect of the BlackBerry-Rembrandt Agreement to the

present case is the Agreement's structure and not the amount that BlackBerry, a company in a significantly different situation than Samsung, paid to license the patented technology for a limited time period. Moreover, the Court does not find that its ruling on this matter prejudiced Samsung's ability to cross-examine Mr. Weinstein. Mr. Weinstein's testimony relied on the Agreement's structure to calculate a royalty amount, and his damages conclusions did not depend upon the total amount paid by BlackBerry. Thus, the Court concludes that admitting the BlackBerry-Rembrandt Agreement with the specific dollar amounts redacted does not warrant a new trial on damages.

2. The [*27] Zhone-Rembrandt Agreement

The 2007 Patent-Sale Agreement between Zhone and Summit, a Rembrandt entity, covers a 74-patent sale that included the '580 Patent and the '228 Patent ("Zhone-Rembrandt Agreement"). (Mot. at 15.) The Court admitted the Zhone-Rembrandt Agreement but excluded a provision within it that allocated the payment amount "pro-rata among all Assigned Patents." (*Id.*) Samsung argues that it was prejudicial error for the Court to exclude this provision because it was "probative evidence about the value of the patents-in-suit" that Samsung would have relied on "to establish the value of a license to those patents." (*Id.* at 15-16.) In response, Rembrandt contends that the allocation clause was not probative of the value of the patents-in-suit because Rembrandt's corporate representative testified that no valuation was done when the patents were purchased, and "the allocation was made only to ensure consistent reporting to the IRS for purposes such as reporting capital gains." (Resp. at 23.) Additionally, Rembrandt argues that "mere patent counting and dividing" to come up with a purported value for each patent is highly improper and the Court correctly avoided such impropriety by excluding such provision. **[*28]** (*Id.*)

As discussed at the pre-trial hearing on this matter, Rembrandt related testimony from its corporate representative that the allocation clause was included solely for business purposes. (1/20/2015 Tr., Dkt. No. 225 at 65:25-66:5.) Samsung did not persuade the Court then, and does not persuade the Court now, that the allocation clause was included as a legitimate valuation of all 74 patents rather than merely for business purposes; such purposes being far removed from a proper hypothetical negotiation. Accordingly, the Court holds that a new trial is not warranted based on exclusion of the allocation clause in the Zhone-Rembrandt Agreement.

3. The BlackBerry-Bandspeed Agreement

The BlackBerry-Bandspeed Agreement is a 2013 license agreement between BlackBerry and Bandspeed that licensed two patents covering another Bluetooth feature. (2/2/2015 Tr., Dkt. No. 259 at 67, 74.) Samsung argues that the Court's exclusion of such agreement was erroneous because it would have provided another relevant data point for the jury to consider in determining a damages amount. (Mot. at 16.) Samsung also asserts that the agreement was timely produced. (*Id.* at 17.) Rembrandt disputes the relevance of the agreement **[*29]** because it covers different Bluetooth technology, and neither of the parties to the agreement is a party in the current case. (Resp. at 24-25.) Rembrandt further contends that Samsung produced the BlackBerry-Bandspeed Agreement "well beyond the discovery deadline," and it was not considered in Samsung's expert report. (*Id.* at 25.)

The Court finds that the BlackBerry-Bandspeed Agreement was not timely produced. (2/2/2015 Tr., Dkt. No. 259 at 74:21-25, 76:17-77:13.) Moreover, the Court is not persuaded as to its relevance. To have admitted it would have openly invited Samsung's expert to opine on matters outside his reports. Thus, the Court concludes that it was not erroneous to exclude the BlackBerry-Bandspeed Agreement and declines to grant a new trial on this basis.

4. The Jury Verdict Form

Finally, Samsung argues that it was unfair for the Court to *sua sponte* add the phrase "up to the time of trial" to Question Three of the verdict form. (Mot. at 18.) Samsung contends that

the jury could have interpreted the phrase to mean that "Rembrandt's running royalty was the only form of damages that the Court deemed proper." (*Id.* at 19.) The Court disagrees. Leaving out "up to the time of trial" on Question Three **[*30]** of the verdict form would have created substantial juror confusion, as the jury would have had no temporal parameter to guide its damages determinations. Moreover, the Court specifically instructed the jury: "You may award a fully-paid, lump-sum royalty for the time period of the infringement." (2/13/2015 A.M. Trial Tr., Dkt. No. 300 at 36:14-15.) Therefore, the Court concludes that Samsung is not entitled to a new trial based on the verdict form.

VI. CONCLUSION

For the reasons set forth above, the Court finds that the jury's verdict with regard to damages should not be disturbed. The jury's verdict in this respect is supported by substantial evidence and should stand. Further, the Court finds that Samsung is not entitled to a new trial on damages. Accordingly, Samsung's Rule 50(b) Renewed Motion for Judgment as a Matter of Law and/or Rule 59(a) Motion for New Trial on Damages Issues (Dkt. No. 328) is **DENIED**.

So ORDERED and SIGNED this 29th day of January, 2016.

/s/ Rodney Gilstrap

RODNEY GILSTRAP

UNITED STATES DISTRICT JUDGE

Source: **Combined Source Set 3 - Patent Cases from Federal Courts**
Terms: **8457228 OR 8,457,228** (Suggest Terms for My Search)
View: Full
Date/Time: Thursday, September 15, 2016 - 11:32 AM EDT

* Signal Legend:
- Warning: Negative treatment is indicated
- Questioned: Validity questioned by citing refs
- Caution: Possible negative treatment
- Positive treatment is indicated
- Citing Refs. With Analysis Available
- Citation information available
* Click on any *Shepard's* signal to *Shepardize*® that case.

LexisNexis® About LexisNexis | Privacy Policy | Terms & Conditions | Contact Us
Copyright © 2016 LexisNexis, a division of Reed Elsevier Inc. All rights reserved.

REMBRANDT WIRELESS TECHNOLOGIES, LP v. SAMSUNG ELECTRONICS CO. LTD., ET AL.

Case No. 2:13CV213-JRG-RSP

UNITED STATES DISTRICT COURT FOR THE EASTERN DISTRICT OF TEXAS, MARSHALL DIVISION

2015 U.S. Dist. LEXIS 20303

January 29, 2015, Decided
January 29, 2015, Filed

PRIOR HISTORY: Rembrandt Wireless Techs., LP v. Samsung Elecs. Co., 2014 U.S. Dist. LEXIS 93645 (E.D. Tex., July 10, 2014)

CORE TERMS: non-instituted, inter partes, patent, trial date, disadvantage, tactical, weigh, patents-in-suit, simplification, infringement, discovery, stay proceedings, power to control, collectively, outstanding, instituted, unduly

COUNSEL: **[*1]** Paul Michel, Mediator, Pro se, Alexandria, VA.

For William Jospeh Cornelius, Jr, Mediator: William Joseph Cornelius, Jr, Wilson Robertson & Cornelius Pc, Tyler, Tx.

David Keyzer, Technical Advisor, Pro se, El Dorado Hills, CA.

For Rembrandt Wireless Technologies LP, Plaintiff: Demetrios Anaipakos, Lead Attorney, Alisa Anne Lipski, Brian Ervin Simmons, Kyril Vladimir Talanov, Ahmad, Zavitsanos, Anaipakos, Alavi & Mensing P.C., Houston, Tx; Alden Harris, Pro Hac Vice, Blaine Andrew Larson, Eric James Enger, Michael F Heim, Miranda Yan Jones, Heim, Payne & Chorush, Llp-Houston, Houston, Tx; Amir H. Alavi, Jamie Alan Aycock, Ahmad Zavitsanos & Anaipakos - Houston, Houston, Tx; Claire Abernathy Henry, Jack Wesley Hill, Thomas John Ward, Jr, Ward & Smith Law Firm, Longview, Tx; Robert Allan Bullwinkel, Heim Payne Chorush, Llp, Houston, Tx; Sean R D Gorman, Ahmad, Zavitsanos, Anaipakos, Alavi, Houston, Tx.

For Samsung Electronics Co LTD, Samsung Electronics America Inc, Sansung Telecommunications America LLC, Samsung Austin Semiconductor LLC, Defendants: Jeffrey Kirk Sherwood, Lead Attorney, Venable Llp, Washington, Dc; Brian P Biddinger, Deanne K Cevasco, Jesse J Jenner, Vincent Y Ling, Ropes **[*2]** & Gray - New York, New York, Ny; Daniel G Cardy, Ji Young Park, Dickstein Shapiro, Llp-Dc, Washington, Dc; Gabrielle Elizabeth Higgins, Rebecca R Hermes, Pro Hac Vice, Ropes & Gray - East Palo Alto, East Pala Alto, Ca; Gerard A Haddad, Pro Hac Vice, Dickstein Shapiro Llp - New York, New York, Ny; Jeffrey A Miller, Dickstein Shapiro Llp - Palo Alto, Palo Alto, Ca; Michael Charles Smith, Siebman Burg Phillips & Smith, Llp-Marshall, Marshall, Tx.

For Research In Motion Corporation, Defendant: Richard S J Hung, LEAD ATTORNEY, James Ryan Gilfoil, Lucia Elena Ballard, Morrison & Foerster LLP San Francisco, San Francisco, CA; Vincent J Belusko, LEAD ATTORNEY, Jared W Miller, Morrison & Foerster LLP - Los Angeles, Los Angeles, CA; Edgar Leon Carter, John Steven Torkelson, Carter Scholer Arnett Hamada & Mockler PLLC, Dallas, TX.

For Research in Motion Ltd, Defendant: Richard S J Hung, LEAD ATTORNEY, James Ryan Gilfoil, Morrison & Foerster LLP San Francisco, San Francisco, CA; Vincent J Belusko, LEAD ATTORNEY, Jared W Miller, Morrison & Foerster LLP - Los Angeles, Los Angeles, CA; Edgar Leon Carter, John Steven Torkelson, Carter Scholer Arnett Hamada & Mockler PLLC, Dallas, TX.

For Research in **[*3]** Motion Ltd, Counter Claimant: Richard S J Hung, LEAD ATTORNEY, James Ryan Gilfoil, Lucia Elena Ballard, Morrison & Foerster LLP San Francisco, San Francisco, CA; Vincent J Belusko, LEAD ATTORNEY, Jared W Miller, Morrison & Foerster LLP - Los Angeles, Los Angeles, CA; John Steven Torkelson, Carter Scholer Arnett Hamada & Mockler PLLC, Dallas, TX.

For Research In Motion Corporation, Research in Motion Ltd, Counter Claimants: Richard S J Hung, LEAD ATTORNEY, James Ryan Gilfoil, Morrison & Foerster LLP San Francisco, San Francisco, CA; Vincent J Belusko, LEAD ATTORNEY, Jared W Miller, Morrison & Foerster LLP - Los Angeles, Los Angeles, CA; Eric C Pai, Morrison & Foerster - Palo Alto, Palo Alto, CA; John Steven Torkelson, Carter Scholer Arnett Hamada & Mockler PLLC, Dallas, TX.

For Rembrandt Wireless Technologies LP, Counter Defendant: Amir H. Alavi, Ahmad Zavitsanos & Anaipakos - Houston, Houston, TX; Brian Ervin Simmons, Demetrios Anaipakos, Ahmad, Zavitsanos, Anaipakos, Alavi & Mensing P.C., Houston, TX; Claire Abernathy Henry, Jack Wesley Hill, Thomas John Ward, Jr, Ward & Smith Law Firm, Longview, TX; Eric James Enger, Michael F Heim, Miranda Yan Jones, Heim, Payne & Chorush, LLP-Houston, **[*4]** Houston, TX; Robert Allan Bullwinkel, Heim Payne Chorush, LLP, Houston, TX.

For Rembrandt Wireless Technologies LP, Counter Defendant: Demetrios Anaipakos, LEAD ATTORNEY, Ahmad, Zavitsanos, Anaipakos, Alavi & Mensing P.C., Houston, TX; Alden Harris, Blaine Andrew Larson, Eric James Enger, Michael F Heim, Miranda Yan Jones, Heim, Payne & Chorush, LLP-Houston, Houston, TX; Amir H. Alavi, Ahmad Zavitsanos & Anaipakos - Houston, Houston, TX; Brian Ervin Simmons, Kyril Vladimir Talanov, Ahmad, Zavitsanos, Anaipakos, Alavi & Mensing P.C., Houston, TX; Robert Allan Bullwinkel, Heim Payne Chorush, LLP, Houston, TX; Thomas John Ward, Jr, Ward & Smith Law Firm, Longview, TX.

For Samsung Austin Semiconductor LLC, Samsung Electronics Co LTD, Samsung Electronics America Inc, Sansung Telecommunications America LLC, Counter Claimants: Jeffrey Kirk Sherwood, LEAD ATTORNEY, Venable LLP, Washington, DC; Daniel G Cardy, Dickstein Shapiro, LLP-DC, Washington, DC; Gerard A Haddad, PRO HAC VICE, Dickstein Shapiro LLP - New York, New York, NY; Michael Charles Smith, Siebman Burg Phillips & Smith, LLP-Marshall, Marshall, TX.

JUDGES: ROY S. PAYNE, UNITED STATES MAGISTRATE JUDGE.

OPINION BY: ROY S. PAYNE

OPINION

ORDER DENYING MOTION TO STAY [*5] PENDING INTER PARTES REVIEW

Before the Court is Defendants' Motion to Stay Pending *Inter Partes* Review (Dkt. No. 112, "Motion to Stay").

BACKGROUND AND PROCEDURAL HISTORY

Plaintiff Rembrandt Wireless Technologies, LP ("Rembrandt") is the assignee and owner of United States Patent No. 8,023,580 ("the '580 Patent") and United States Patent No. **8,457,228** ("the '228 Patent") (collectively, "the Patents-in-Suit"). (Dkt. No. 84 at ¶ 2, "Third Amended Complaint"). In its Third Amended Complaint, Rembrandt accused Defendants, *inter alia*, of infringement of the Patents-in-Suit. (*Id*. at ¶¶ 14, 21.)

Throughout the course of this litigation, Defendants filed various petitions for *Inter Partes* Review ("IPR") of both the '580 Patent and the '228 Patent. *See, e.g.*, (Dkt. No. 208) (citing a total of six IPR petitions against the '580 Patent and six IPR petitions against the '228 Patent). In September 2014, the United States Patent and Trademark Office ("USPTO") declined to institute IPR proceedings against claims 2, 19, 23, 29, 41, 52, and 59 of the '580 Patent. (*Id.* at 1—3.) In December 2014, the USPTO declined to institute IPR proceedings against claim 21 of the '228 Patent. (*Id.*) Plaintiff represents it intends to limit its infringement allegations to only those non-instituted claims (*i.e.*, claims 2, 19, 23, 29, 41, 52, and 59 of the '580 Patent and claim 21 of the '228 Patent) (collectively, "non-instituted **[*6]** claims"). *See, e.g.*, (Hr'g Tr. at 23:24—24:11, Dkt. No. 225) ("MR. HEIM [counsel for Rembrandt] . . . the only claims that are going to be asserted at trial in this case are claims for which the PTAB has denied instituting an IPR"); Indeed, the parties appear to be in agreement on this point. (*Id.* at 21:11—17)

> Your Honor, Jeff Sherwood for Samsung. Just very briefly. The court is correct that the PTAB has not instituted trial with respect to all of the claims; and, in fact, we got an e-mail last night, I guess, from the plaintiff saying that it has reduced the scope of its claims to just those that are not instituted for trial with the PTAB.

Although Defendants have recently filed new petitions for IPR proceedings on the non-instituted claims, on January 28, 2015, the USPTO denied institution as to the non-instituted claims of the '580 Patent and has yet to institute any proceedings on claim 21 of the '228 Patent. (Dkt. No. 240); *see also* (Dkt. No. 208 at 1—2) (expecting to file an IPR in January 2015 on the non-instituted claim of the '228 Patent). Trial of this case is set for February 9, 2015.

APPLICABLE LAW

The district court has the inherent power to control its own docket, including the power to stay proceedings. *Clinton v. Jones*, 520 U.S. 681, 706, 117 S. Ct. 1636, 137 L. Ed. 2d 945 (1997) **[*7]** ("The District Court has broad discretion to stay proceedings as an incident to its power to control its own docket."). How to best manage the court's docket "calls for the exercise of judgment, which must weigh competing interests and maintain an even balance." *Landis v. N. Am. Co.*, 299 U.S. 248, 254—55, 57 S. Ct. 163, 81 L. Ed. 153 (1936). In deciding whether to stay litigation pending patent reexamination and *inter partes* review, courts usually consider three factors: (1) whether a stay will unduly prejudice or present a clear tactical disadvantage to the nonmoving party; (2) whether a stay will simplify the issues in question and trial of the case; and (3) whether discovery is complete and whether a trial date has been set.

ANALYSIS

I. Issue Simplification

Defendants argue that "the IPRs will address the validity of all asserted claims of the patents-in-suit." (Mot. at 6.) Defendants continue, "[c]onsidering the current status and likely disposition of each USPTO proceeding for the patents in suit, there is strong possibility that nearly all of Rembrandt's infringement allegations will be moot. (*Id.* at 7.) The Court observes that the simplification offered by Defendants is not likely based on the recent denials of IPR institutions. *See supra* at 2 (indicating the only potential outstanding petition for IPR as against claim 21 of the '228 Patent). Additionally, Defendants argue **[*8]** that by granting a stay, the parties can avoid a race to the Federal Circuit to obtain the first appellate decision and that "once the USPTO enters a final written decision in those IPRs under 35 U.S.C. § 318(a), Samsung will be estopped from asserting, in this litigation, any invalidity ground it raised or reasonably could have raised in the IPR petitions." (*Id.* at 7—8.)

Given the [illegible] nature of this case in light of the various facts described above (*e.g.*, Plaintiff

limiting the claims to the non-instituted claims, and Defendants' newly filed petition and its subsequent denial of institution), the Court finds that the likelihood of issue simplification in this case is not sufficiently persuasive to weigh in favor of a stay.

II. Prejudice or Tactical Disadvantage

With respect to the second prong of the stay analysis, Defendants first argue that Rembrandt will not be subjected to undue prejudice or tactical disadvantage if the Court stays this litigation because although the grant of a stay would delay Rembrandt's ability to obtain the relief it seeks, "any delay from staying the case will only be for a limited amount of time." (Mot. at 8—9.) However, the Court notes the statute accords the USPTO up to six months **[*9]** to decide whether or not to institute an IPR proceeding and an additional twelve months to complete the IPR process. 35 U.S.C. § 311 *et seq*. By contrast, Rembrandt is entitled to its trial on the merits in February 2015. Granting a stay in light any remaining IPR petitions would unduly prejudice Rembrandt and present it with a clear tactical disadvantage under these facts.

Defendants also argue that "Rembrandt is a non-practicing entity in the business of licensing its patents and is not a competitor in the marketplace with Samsung." (Mot. at 8.) However, the mere fact that Rembrandt is not currently practicing the patents does not mean that, as a matter of law, it is not prejudiced by a substantial delay of an imminent trial date. Accordingly, taken as a whole, this factor weighs against a stay.

III. Discovery and Trial Date

Any remaining outstanding petitions that could potentially implicate any of the presently asserted claims were filed, or are expected to be filed, in January 2015. (Dkt. No. 208 at 1—2.) Therefore, these filings have, or will have, occurred well after discovery had closed (Dkt. No. 64), claims construction had completed (*id.*), and merely a few weeks from the February 9, 2015 trial **[*10]** date. (Dkt. No. 164.) The advanced stage of this case weighs heavily against a stay.

CONCLUSION

Defendants have failed to show that a stay is appropriate. Accordingly, Defendants' Motion to Stay Pending *Inter Partes* Review (Dkt. No. 112) is **DENIED**.

SIGNED this 29th day of January, 2015.

/s/ Roy S. Payne

ROY S. PAYNE

UNITED STATES MAGISTRATE JUDGE

Source: **Combined Source Set 3 - Patent Cases from Federal Courts**
Terms: **8457228 OR 8,457,228** (Suggest Terms for My Search)
View: Full
Date/Time: Thursday, September 15, 2016 - 11:32 AM EDT

* Signal Legend:
- Warning: Negative treatment is indicated
- Questioned: Validity questioned by citing refs
- Caution: Possible negative treatment
- Positive treatment is indicated
- Citing Refs. With Analysis Available
- Citation information available
* Click on any *Shepard's* signal to *Shepardize®* that case.

REMBRANDT WIRELESS TECHNOLOGIES, LP, v. SAMSUNG ELECTRONICS CO., LTD., et al.

CASE NO. 2:13-CV-213-JRG-RSP

UNITED STATES DISTRICT COURT FOR THE EASTERN DISTRICT OF TEXAS, MARSHALL DIVISION

2014 U.S. Dist. LEXIS 93645

July 10, 2014, Decided
July 10, 2014, Filed

SUBSEQUENT HISTORY: Motion denied by Rembrandt Wireless Techs., LP v. Samsung Elecs. Co., 2015 U.S. Dist. LEXIS 54755 (E.D. Tex., Jan. 23, 2015)
Stay denied by Rembrandt Wireless Techs., LP v. Samsung Elecs. Co., 2015 U.S. Dist. LEXIS 20303 (E.D. Tex., Jan. 29, 2015)
Motion denied by Rembrandt Wireless Techs., LP v. Samsung Elecs. Co., 2015 U.S. Dist. LEXIS 20305 (E.D. Tex., Jan. 29, 2015)
Motion denied by, Motion granted by Rembrandt Wireless Techs., LP v. Samsung Elecs. Co., 2015 U.S. Dist. LEXIS 20306 (E.D. Tex., Jan. 30, 2015)
Magistrate's recommendation at Rembrandt Wireless Techs. v. Samsung Elecs. Co., 2015 U.S. Dist. LEXIS 19900 (E.D. Tex., Feb. 5, 2015)
Objection overruled by, Motion denied by Rembrandt Wireless Techs., LP v. Samsung Elecs. Co. Ltd., 2015 U.S. Dist. LEXIS 14193 (E.D. Tex., Feb. 6, 2015)
Motion denied by Rembrandt Wireless Techs., LP v. Samsung Elecs. Co., 2015 U.S. Dist. LEXIS 19904 (E.D. Tex., Feb. 9, 2015)
Motion denied by, Motion for new trial denied by Rembrandt Wireless Techs., LP v. Samsung Elecs. Co., Ltd., 2016 U.S. Dist. LEXIS 10590 (E.D. Tex., Jan. 29, 2016)
Motion denied by, Motion for new trial denied by Rembrandt Wireless Techs., LP v. Samsung Elecs. Co., 2016 U.S. Dist. LEXIS 18797 (E.D. Tex., Feb. 17, 2016)

CORE TERMS: modulation, signal, sequence, trib, transmission, transceiver, specification, training, invention, patentee, disputed, trailing, network, payload, proposed constructions, patent's, dictionary, modem, embodiment, session, slave, patents-in-suit, transmitted, configured, destination, tributary, carrier, crystals, frequency, amplitude

COUNSEL: [*1] Paul Michel, Mediator, Pro se, Alexandria, VA.

David Keyzer, Technical Advisor, Pro se, El Dorado Hills, CA.

For Rembrandt Wireless Technologies LP, Plaintiff: Demetrios Anaipakos, LEAD ATTORNEY, Brian Ervin Simmons, Kyril Vladimir Talanov, Ahmad, Zavitsanos, Anaipakos, Alavi & Mensing P.C., Houston, TX; Alden Harris, PRO HAC VICE, Blaine Andrew Larson, Eric James Enger, Michael F Heim, Robert Allan Bullwinkel, Miranda Yan Jones, Heim, Payne & Chorush, LLP-Houston, Houston, TX; Amir H. Alavi, Ahmad Zavitsanos & Anaipakos - Houston, Houston, TX; Claire Abernathy Henry, Jack Wesley Hill, Thomas John Ward , Jr, Ward & Smith Law Firm, Longview, TX.

For Samsung Electronics Co LTD, Samsung Electronics America Inc, Sansung Telecommunications America LLC, Samsung Austin Semiconductor LLC, Defendants: Jeffrey Kirk Sherwood, LEAD ATTORNEY, Daniel G Cardy, Frank C Cimino , Jr, Dickstein Shapiro, LLP-

DC, Washington, DC; Gerard A Haddad, PRO HAC VICE, Jennifer BianRosa, Dickstein Shapiro LLP - New York, New York, NY; Michael Charles Smith, Siebman Burg Phillips & Smith, LLP-Marshall, Marshall, TX.

For Research In Motion Corporation, Research in Motion Ltd, Defendants, Counter Claimants: Richard S **[*2]** J Hung, LEAD ATTORNEY, Morrison & Foerster LLP San Francisco, San Francisco, CA; Vincent J Belusko, LEAD ATTORNEY, Jared W Miller, Morrison & Foerster LLP - Los Angeles, Los Angeles, CA; Edgar Leon Carter, John Steven Torkelson, Carter Scholer Arnett Hamada & Mockler PLLC, Dallas, TX; James Ryan Gilfoil, Morrison & Foerster LLP - San Francisco, San Francisco, CA.

For Research in Motion Ltd, Research In Motion Corporation, Counter Claimants: Richard S J Hung, LEAD ATTORNEY, Morrison & Foerster LLP San Francisco, San Francisco, CA; Vincent J Belusko, LEAD ATTORNEY, Jared W Miller, Morrison & Foerster LLP - Los Angeles, Los Angeles, CA; James Ryan Gilfoil, Morrison & Foerster LLP - San Francisco, San Francisco, CA; John Steven Torkelson, Carter Scholer Arnett Hamada & Mockler PLLC, Dallas, TX.

For Rembrandt Wireless Technologies LP, Counter Defendant: Amir H. Alavi, Ahmad Zavitsanos & Anaipakos - Houston, Houston, TX; Brian Ervin Simmons, Ahmad, Zavitsanos, Anaipakos, Alavi & Mensing P.C., Houston, TX; Claire Abernathy Henry, Jack Wesley Hill, Thomas John Ward , Jr, Ward & Smith Law Firm, Longview, TX; Eric James Enger, Michael F Heim, Robert Allan Bullwinkel, Miranda Yan Jones, Heim, Payne **[*3]** & Chorush, LLP-Houston, Houston, TX.

For Samsung Electronics America Inc, Samsung Electronics Co LTD, Sansung Telecommunications America LLC, Samsung Austin Semiconductor LLC, Counter Claimants: Jeffrey Kirk Sherwood, LEAD ATTORNEY, Daniel G Cardy, Frank C Cimino , Jr, Dickstein Shapiro, LLP- DC, Washington, DC; Gerard A Haddad, PRO HAC VICE, Dickstein Shapiro LLP - New York, New York, NY; Michael Charles Smith, Siebman Burg Phillips & Smith, LLP-Marshall, Marshall, TX.

For Rembrandt Wireless Technologies LP, Counter Defendant: Demetrios Anaipakos, LEAD ATTORNEY, Brian Ervin Simmons, Kyril Vladimir Talanov, Ahmad, Zavitsanos, Anaipakos, Alavi & Mensing P.C., Houston, TX; Alden Harris, PRO HAC VICE, Blaine Andrew Larson, Eric James Enger, Michael F Heim, Robert Allan Bullwinkel, Miranda Yan Jones, Heim, Payne & Chorush, LLP-Houston, Houston, TX; Claire Abernathy Henry, Jack Wesley Hill, Thomas John Ward , Jr, Ward & Smith Law Firm, Longview, TX.

JUDGES: ROY S. PAYNE, UNITED STATES MAGISTRATE JUDGE.

OPINION BY: ROY S. PAYNE

OPINION

CLAIM CONSTRUCTION MEMORANDUM AND ORDER

On May 30, 2014, the Court held a hearing to determine the proper construction of the disputed claim terms in United States Patents No. 8,023,580 and **[*4] 8,457,228**. After considering the arguments made by the parties at the hearing and in the parties' claim construction briefing (Dkt. Nos. 97, 102, and 103),[1] the Court issues this Claim Construction Memorandum and Order.

FOOTNOTES

1 Citations to documents (such as the parties' briefs and exhibits) in this Claim Construction Memorandum and Order refer to the page numbers of the original documents rather than

the page numbers assigned by the Court's electronic docket unless otherwise indicated. Defendants are Samsung Electronics Co., Ltd., Samsung Electronics America, Inc., Samsung Telecommunications America, LLC, Samsung Austin Semiconductor, LLC (collectively referred to as "Samsung"), Blackberry Corp., and Blackberry Ltd. (collectively referred to as "Blackberry"; formerly known as Research In Motion Corp. and Research In Motion Ltd., respectively) (all collectively referred to as "Defendants").

Table of Contents

BACKGROUND	
LEGAL PRINCIPLES	
CONSTRUCTION OF DISPUTED TERMS	
A. "first modulation method" and "second modulation [method]"	
B. "modulation method [] of a different type" and "different types of modulation methods"	
C. "communication[s] device," "device that transmits," and "logic configured to transmit"	
D. "training signal" and "trailing signal"	
E. "signal level compensation"	
F. "a first portion of the first communication indicating that the second modulation method will be used for modulating the payload data in the payload portion of the first communication"	
CONCLUSION	

BACKGROUND

Plaintiff **[*5]** brings suit alleging infringement of United States Patents No. 8,023,580 ("the '580 Patent") and **8,457,228** ("the '228 Patent") (collectively, the "patents-in-suit").

The patents-in-suit are both titled "System and Method of Communication Using At Least Two Modulation Methods." The '580 Patent issued on September 20, 2011, and bears a filing date of August 19, 2009. The '228 Patent issued on June 4, 2013, and bears a filing date of August 4, 2011. The '228 Patent is a continuation of the '580 Patent. Both patents-in-suit bear an earliest priority date of December 5, 1997.

In general, the patents-in-suit relate to modulation methods for communications. Plaintiff argues that the patents-in-suit relate to the well-known "Bluetooth" wireless communication standards. *See* Dkt. No. 97 at 1. The Abstract of the '580 Patent is representative and states:

> A device may be capable of communicating using at least two type types [*sic*] of modulation methods. The device may include a transceiver capable of acting as a master according to a master/slave relationship in which communication from a slave to a master occurs in response to communication from the master to the slave. The master transceiver may **[*6]** send transmissions discrete transmissions [*sic*] structured with a first portion and a payload portion. Information in the first portion may be modulated according to a first modulation method and indicate an impending change to a second modulation method, which is used for transmitting the payload portion. The discrete transmissions may be addressed for an intended destination of the payload portion.

LEGAL PRINCIPLES

"It is a 'bedrock principle' of patent law that 'the claims of a patent define the invention to which the patentee is entitled the right to exclude.'" *Phillips v. AWH Corp.*, 415 F.3d 1303, 1312

(Fed. Cir. 2005) (en banc) (quoting *Innova/Pure Water Inc. v. Safari Water Filtration Sys., Inc.*, 381 F.3d 1111, 1115 (Fed. Cir. 2004)). To determine the meaning of the claims, courts start by considering the intrinsic evidence. *See id.* at 1313; *see also C.R. Bard, Inc. v. U.S. Surgical Corp.*, 388 F.3d 858, 861 (Fed. Cir. 2004); *Bell Atl. Network Servs., Inc. v. Covad Commc'ns Group, Inc.*, 262 F.3d 1258, 1267 (Fed. Cir. 2001). The intrinsic evidence includes the claims themselves, the specification, and the prosecution history. *See Phillips*, 415 F.3d at 1314; *C.R. Bard*, 388 F.3d at 861. **[*7]** Courts give claim terms their ordinary and accustomed meaning as understood by one of ordinary skill in the art at the time of the invention in the context of the entire patent. *Phillips*, 415 F.3d at 1312-13; *accord Alloc, Inc. v. ITC*, 342 F.3d 1361, 1368 (Fed. Cir. 2003).

The claims themselves provide substantial guidance in determining the meaning of particular claim terms. *Phillips*, 415 F.3d at 1314. First, a term's context in the asserted claim can be very instructive. *Id.* Other asserted or unasserted claims can aid in determining the claim's meaning because claim terms are typically used consistently throughout the patent. *Id.* Differences among the claim terms can also assist in understanding a term's meaning. *Id.* For example, when a dependent claim adds a limitation to an independent claim, it is presumed that the independent claim does not include the limitation. *Id.* at 1314-15.

"[C]laims 'must be read in view of the specification, of which they are a part.'" *Id.* at 1315 (quoting *Markman v. Westview Instruments, Inc.*, 52 F.3d 967, 979 (Fed. Cir. 1995) (en banc)). "[T]he specification 'is always highly relevant to the claim construction analysis. Usually, it is dispositive; **[*8]** it is the single best guide to the meaning of a disputed term.'" *Phillips*, 415 F.3d at 1315 (quoting *Vitronics Corp. v. Conceptronic, Inc.*, 90 F.3d 1576, 1582 (Fed. Cir. 1996)); *accord Teleflex, Inc. v. Ficosa N. Am. Corp.*, 299 F.3d 1313, 1325 (Fed. Cir. 2002). This is true because a patentee may define his own terms, give a claim term a different meaning than the term would otherwise possess, or disclaim or disavow claim scope. *Phillips*, 415 F.3d at 1316. In these situations, the inventor's lexicography governs. *Id.* The specification may also resolve the meaning of ambiguous claim terms "where the ordinary and accustomed meaning of the words used in the claims lack sufficient clarity to permit the scope of the claim to be ascertained from the words alone." *Teleflex*, 299 F.3d at 1325. But, "[a]lthough the specification may aid the court in interpreting the meaning of disputed claim language, particular embodiments and examples appearing in the specification will not generally be read into the claims." *Comark Communs. v. Harris Corp.*, 156 F.3d 1182, 1187 (Fed. Cir. 1998) (quoting *Constant v. Advanced Micro-Devices, Inc.*, 848 F.2d 1560, 1571 (Fed. Cir. 1988)); *accord Phillips*, 415 F.3d at 1323.

The **[*9]** prosecution history is another tool to supply the proper context for claim construction because a patent applicant may also define a term in prosecuting the patent. *Home Diagnostics, Inc., v. Lifescan, Inc.*, 381 F.3d 1352, 1356 (Fed. Cir. 2004) ("As in the case of the specification, a patent applicant may define a term in prosecuting a patent."). "[T]he prosecution history (or file wrapper) limits the interpretation of claims so as to exclude any interpretation that may have been disclaimed or disavowed during prosecution in order to obtain claim allowance." *Standard Oil Co. v. Am. Cyanamid Co.*, 774 F.2d 448, 452 (Fed. Cir. 1985).

Although extrinsic evidence can be useful, it is "less significant than the intrinsic record in determining the legally operative meaning of claim language." *Phillips*, 415 F.3d at 1317 (citations and internal quotation marks omitted). Technical dictionaries and treatises may help a court understand the underlying technology and the manner in which one skilled in the art might use claim terms, but technical dictionaries and treatises may provide definitions that are too broad or may not be indicative of how the term is used in the patent. *Id.* at 1318. Similarly, **[*10]** expert testimony may aid a court in understanding the underlying technology and determining the particular meaning of a term in the pertinent field, but an expert's conclusory, unsupported assertions as to a term's definition are entirely unhelpful to a court. *Id.* Generally, extrinsic evidence is "less reliable than the patent and its prosecution history in determining how to read claim terms." *Id.*