US006034563A

United States Patent [19]

Mashiko

[11] **Patent Number: 6,034,563**

[45] **Date of Patent: *Mar. 7, 2000**

[54] **SEMICONDUCTOR INTEGRATED CIRCUIT HAVING REDUCED CURRENT LEAKAGE AND HIGH SPEED**

[75] Inventor: **Koichiro Mashiko**, Tokyo, Japan

[73] Assignee: **Mitsubishi Denki Kabushiki Kaisha**, Tokyo, Japan

[*] Notice: This patent issued on a continued prosecution application filed under 37 CFR 1.53(d), and is subject to the twenty year patent term provisions of 35 U.S.C. 154(a)(2).

[21] Appl. No.: **08/651,588**

[22] Filed: **May 22, 1996**

[30] **Foreign Application Priority Data**

Oct. 19, 1995 [JP] Japan 7-271574

[51] **Int. Cl.**[7] **G05F 1/10**

[52] **U.S. Cl.** **327/544**; 327/377

[58] **Field of Search** 327/390, 589, 327/377, 170, 108–112, 544; 326/88, 80, 81

[56] **References Cited**

U.S. PATENT DOCUMENTS

4,904,885	2/1990	Yamada et al.	327/536
5,041,739	8/1991	Goto	327/536
5,128,560	7/1992	Chern et al.	326/81
5,159,214	10/1992	Okumura	326/110
5,321,324	6/1994	Hardee et al.	326/80
5,461,338	10/1995	Hirayama et al.	327/534
5,528,173	6/1996	Merritt et al.	326/81

FOREIGN PATENT DOCUMENTS

0 690 510	1/1996	European Pat. Off. .	
1-289137	11/1989	Japan	327/544
5-48424	2/1993	Japan	327/544
6-29834	2/1994	Japan .	
7-212217	8/1995	Japan .	

OTHER PUBLICATIONS

MTC MOS Logic Circuit Technology, "Intention of Decreasing the Electric Power Consumption for LSI—1 V. Small Power Consumption High–speed Operation", Densi–Gijutsu (Electronics Technology) 1994–9, pp. 29–32.

Primary Examiner—Kenneth B. Wells
Attorney, Agent, or Firm—Oblon, Spivak, McClelland, Maier & Neustadt, P.C.

[57] **ABSTRACT**

A semiconductor integrated circuit including a first MOS transistor supplied with a first power supply voltage and having a high threshold voltage; a second MOS transistor supplied with a second power supply voltage and having the high threshold voltage; a logic circuit connected between the first transistor and the second transistor and including a plurality of MOS transistors having a low threshold voltage; a control circuit for generating a control signal when the logic circuit is in a standby state; and a voltage generating circuit for generating a first voltage which is a higher than the first power supply voltage and a second voltage which is a lower than the second power supply voltage, for supplying the first voltage to a gate of the first MOS transistor and for supplying the second voltage to a gate of the second MOS transistor when the logic circuit is in the standby state, thereby to decrease leakage current through the first and second transistors and through the logic circuit when in the standby state.

34 Claims, 11 Drawing Sheets

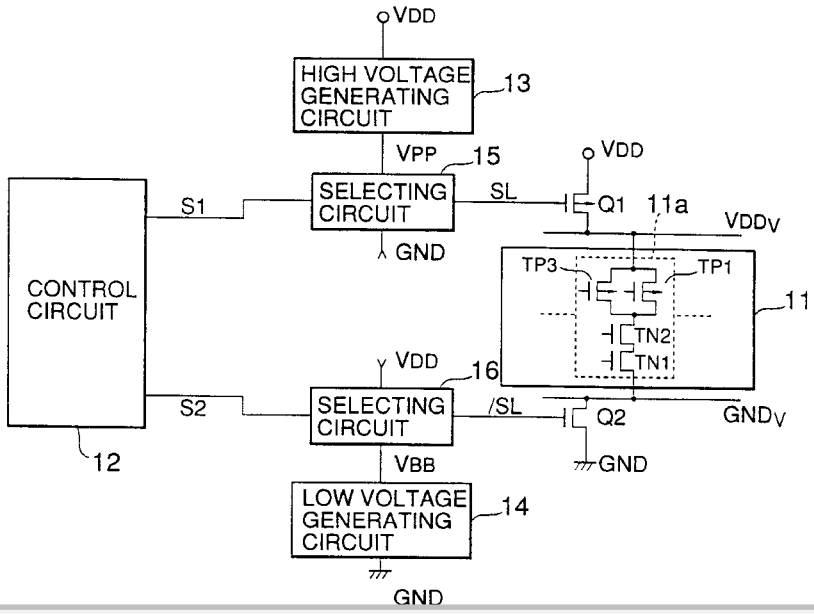

DOCKET ALARM
Find authenticated court documents without watermarks at docketalarm.com.

FIG.1

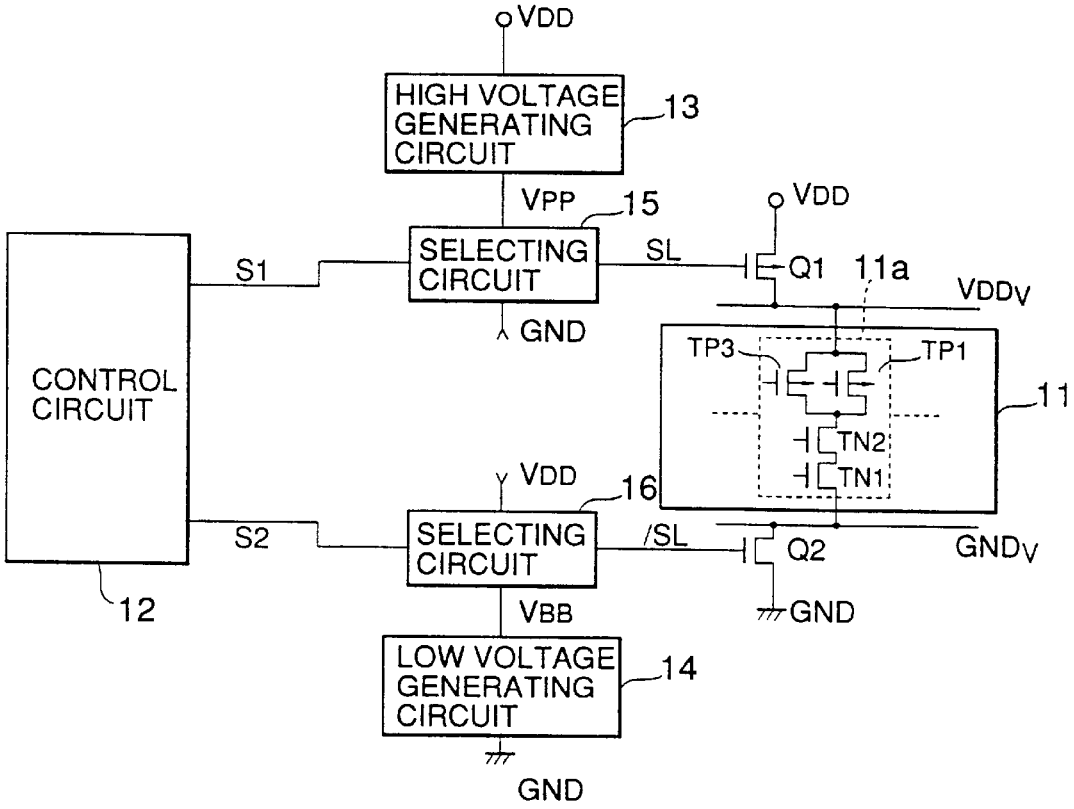

FIG.2

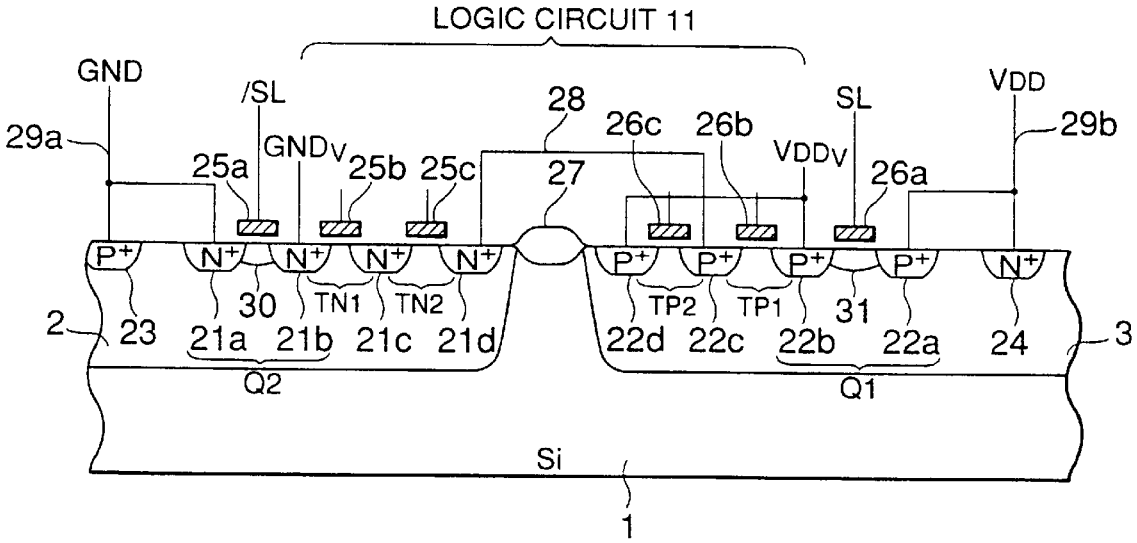

DOCKET ALARM Find authenticated court documents without watermarks at docketalarm.com.

FIG.3

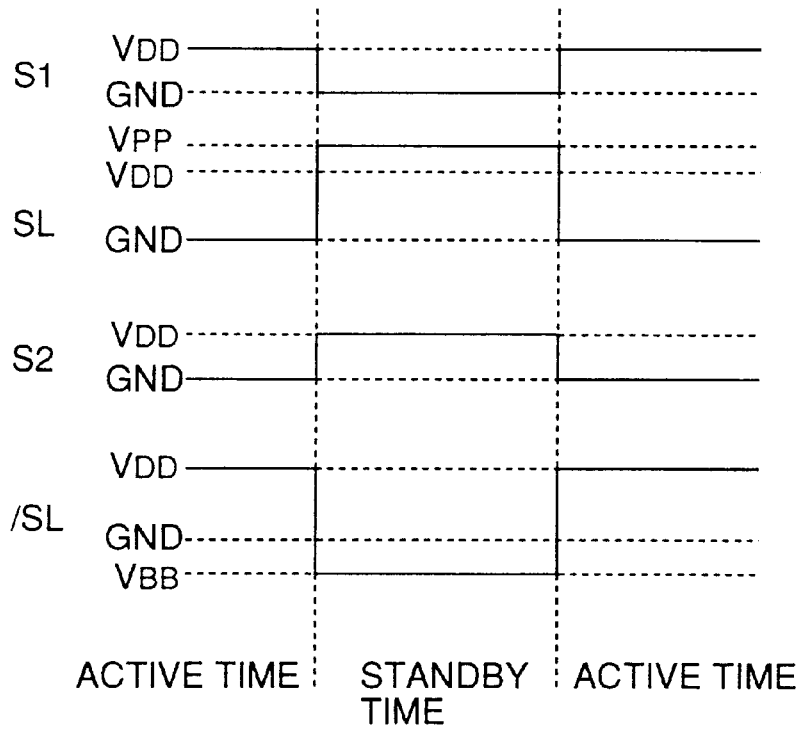

FIG.4

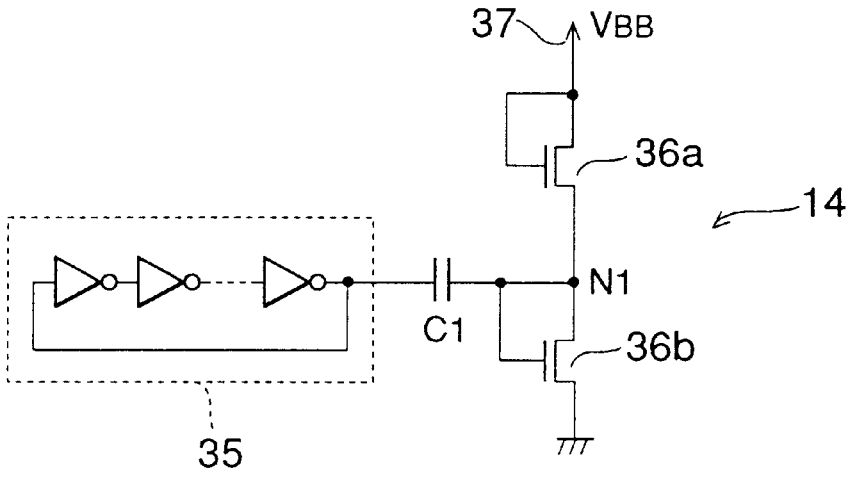

DOCKET ALARM Find authenticated court documents without watermarks at docketalarm.com.

FIG.5

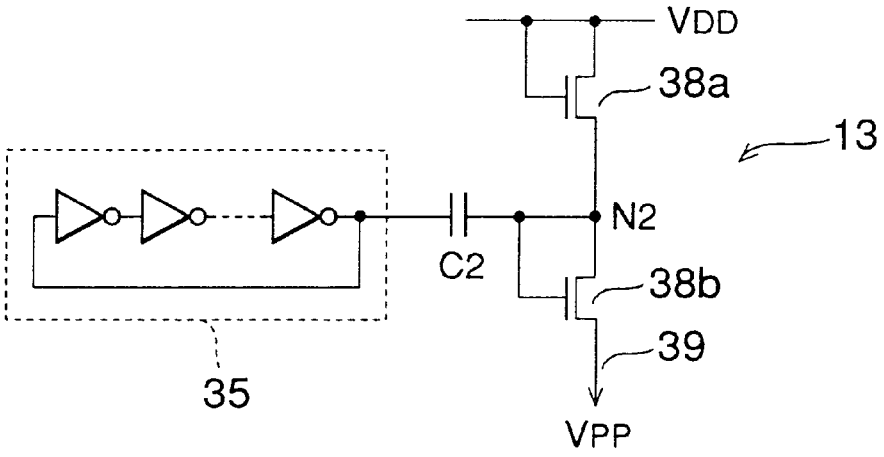

FIG.6

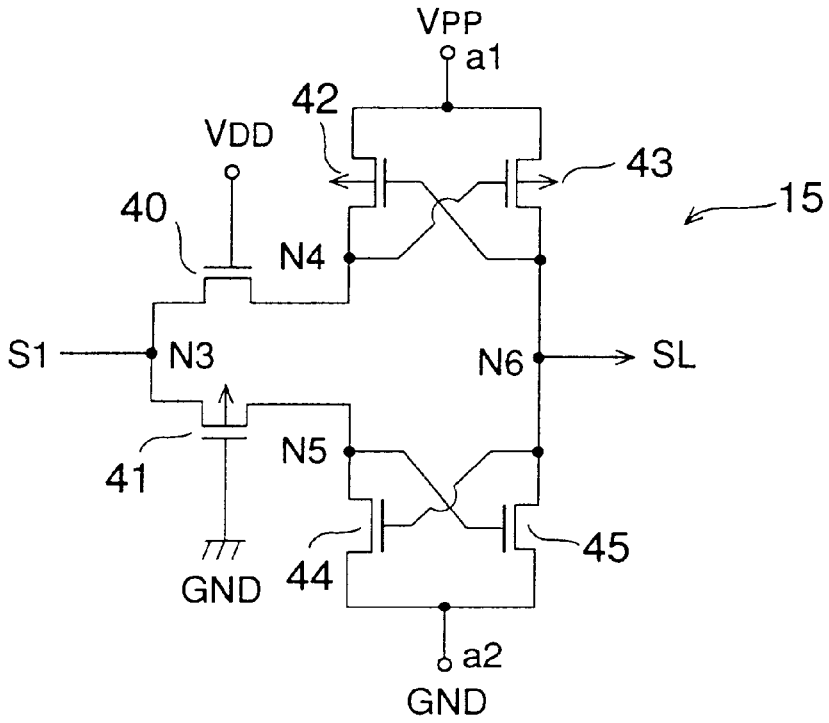

DOCKET ALARM Find authenticated court documents without watermarks at docketalarm.com.

FIG.7

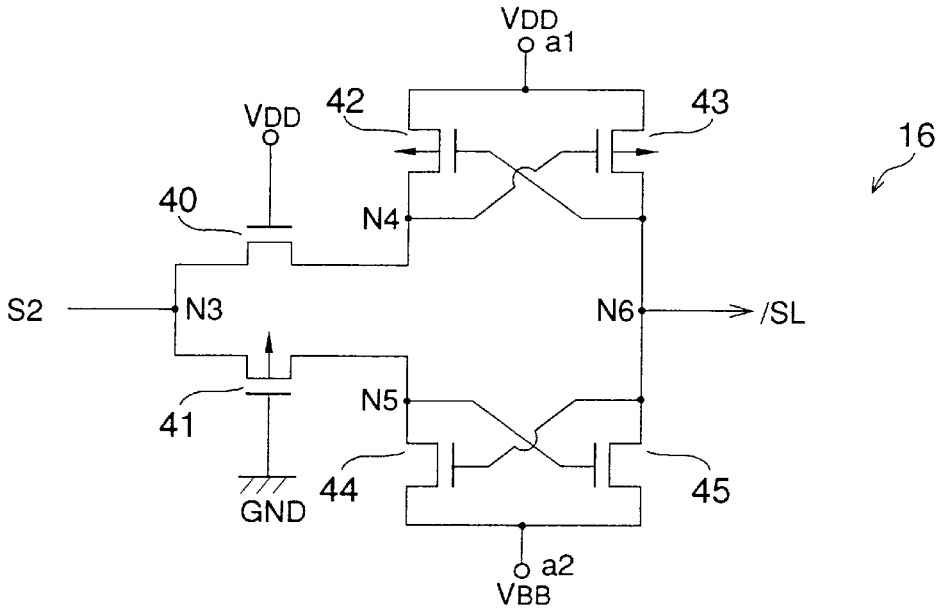

FIG.8

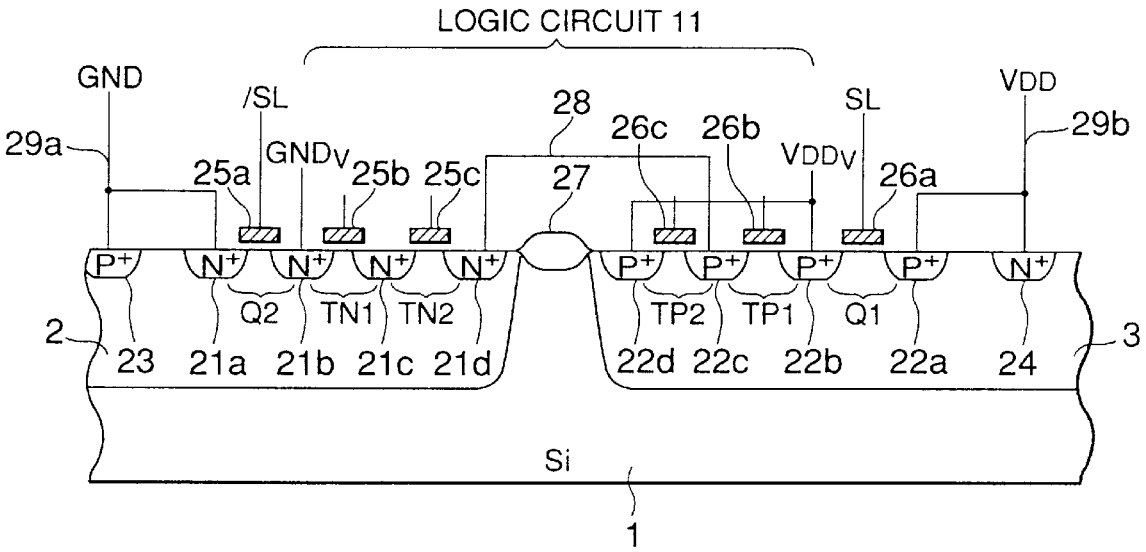

DOCKET ALARM Find authenticated court documents without watermarks at docketalarm.com.

DOCKET ALARM

Explore Litigation Insights

Docket Alarm provides insights to develop a more informed litigation strategy and the peace of mind of knowing you're on top of things.

Real-Time Litigation Alerts

Keep your litigation team up-to-date with **real-time alerts** and advanced team management tools built for the enterprise, all while greatly reducing PACER spend.

Our comprehensive service means we can handle Federal, State, and Administrative courts across the country.

Advanced Docket Research

With over 230 million records, Docket Alarm's cloud-native docket research platform finds what other services can't. Coverage includes Federal, State, plus PTAB, TTAB, ITC and NLRB decisions, all in one place.

Identify arguments that have been successful in the past with full text, pinpoint searching. Link to case law cited within any court document via Fastcase.

Analytics At Your Fingertips

Learn what happened the last time a particular judge, opposing counsel or company faced cases similar to yours.

Advanced out-of-the-box PTAB and TTAB analytics are always at your fingertips.

API

Docket Alarm offers a powerful API (application programming interface) to developers that want to integrate case filings into their apps.

LAW FIRMS

Build custom dashboards for your attorneys and clients with live data direct from the court.

Automate many repetitive legal tasks like conflict checks, document management, and marketing.

FINANCIAL INSTITUTIONS

Litigation and bankruptcy checks for companies and debtors.

E-DISCOVERY AND LEGAL VENDORS

Sync your system to PACER to automate legal marketing.