To:	Mail Stop 8 Director of the U.S. Patent and Trademark Office P.O. Box 1450 Alexandria, VA 22313–1450	**REPORT ON THE FILING OR DETERMINATION OF AN ACTION REGARDING A PATENT OR TRADEMARK**

In Compliance with 35 U.S.C. § 290 and/or 15 U.S.C. § 1116 you are hereby advised that a court action has been filed in the U.S. District Court Southern District of California on the following: _**X**_ Patents or ___ Trademarks:

DOCKET NO. 3:18–cv–01784–MMA–JLB	**DATE FILED** 8/1/18	**US District Court** Southern District of California San Diego, CA
PLAINTIFF Bell Northern Research, LLC		DEFENDANT Huawei Technologies Co., Ltd. , et al.
PATENT OR TRADEMARK NO.	**PATENT OR TRADEMARK NO.**	**PATENT OR TRADEMARK NO.**
1. 7,319,889	**6.** 8,792,432	**11.**
2. 8,204,554	**7.**	**12.**
3. 7,990,842	**8.**	**13.**
4. 8,416,862	**9.**	**14.**
5. 6,941,156	**10.**	**15.**

In the above–entitled case, the following patents(s)/ trademark(s) have been included:

DATE INCLUDED	INCLUDED BY __ Amendment __ Answer __ Cross Bill __ Other Pleading	
PATENT OR TRADEMARK NO.	**PATENT OR TRADEMARK NO.**	**PATENT OR TRADEMARK NO.**
1.	**6.**	**11.**
2.	**7.**	**12.**
3.	**8.**	**13.**
4.	**9.**	**14.**
5.	**10.**	**15.**

In the above–entitled case, the following decision has been rendered or judgment issued:

DECISION/JUDGMENT

CLERK John Morrill	(BY) DEPUTY CLERK	DATE

To:	Mail Stop 8 Director of the U.S. Patent and Trademark Office P.O. Box 1450 Alexandria, VA 22313–1450	**REPORT ON THE FILING OR DETERMINATION OF AN ACTION REGARDING A PATENT OR TRADEMARK**

In Compliance with 35 U.S.C. § 290 and/or 15 U.S.C. § 1116 you are hereby advised that a court action has been filed in the U.S. District Court Southern District of California on the following: _**X**_ Patents or ___ Trademarks:

DOCKET NO. 3:18–cv–01785–WQH–BLM	**DATE FILED** 8/1/18	**US District Court** Southern District of California San Diego, CA
PLAINTIFF Bell Northern Research, LLC		DEFENDANT Kyocera Corporation , et al.
PATENT OR TRADEMARK NO.	**PATENT OR TRADEMARK NO.**	**PATENT OR TRADEMARK NO.**
1. 7,319,889	**6.** 8,792,432	**11.**
2. 8,204,554	**7.**	**12.**
3. 7,990,842	**8.**	**13.**
4. 8,416,862	**9.**	**14.**
5. 6,941,156	**10.**	**15.**

In the above–entitled case, the following patents(s)/ trademark(s) have been included:

DATE INCLUDED	INCLUDED BY __ Amendment __ Answer __ Cross Bill __ Other Pleading	
PATENT OR TRADEMARK NO.	**PATENT OR TRADEMARK NO.**	**PATENT OR TRADEMARK NO.**
1.	**6.**	**11.**
2.	**7.**	**12.**
3.	**8.**	**13.**
4.	**9.**	**14.**
5.	**10.**	**15.**

In the above–entitled case, the following decision has been rendered or judgment issued:

DECISION/JUDGMENT

CLERK John Morrill	(BY) DEPUTY CLERK	DATE

To:	Mail Stop 8 Director of the U.S. Patent and Trademark Office P.O. Box 1450 Alexandria, VA 22313–1450	**REPORT ON THE FILING OR DETERMINATION OF AN ACTION REGARDING A PATENT OR TRADEMARK**

In Compliance with 35 U.S.C. § 290 and/or 15 U.S.C. § 1116 you are hereby advised that a court action has been filed in the U.S. District Court Southern District of California on the following: **_X_** Patents or ___ Trademarks:

DOCKET NO. 3:18–cv–01786–MMA–WVG	**DATE FILED** 8/1/18	**US District Court** Southern District of California San Diego, CA
PLAINTIFF Bell Northern Research, LLC		DEFENDANT ZTE Corporation , et al.
PATENT OR TRADEMARK NO.	**PATENT OR TRADEMARK NO.**	**PATENT OR TRADEMARK NO.**
1. 7,319,889	**6.** 8,792,432	**11.**
2. 8,204,554	**7.**	**12.**
3. 7,990,842	**8.**	**13.**
4. 8,416,862	**9.**	**14.**
5. 6,941,156	**10.**	**15.**

In the above–entitled case, the following patents(s)/ trademark(s) have been included:

DATE INCLUDED	INCLUDED BY __ Amendment __ Answer __ Cross Bill __ Other Pleading	
PATENT OR TRADEMARK NO.	**PATENT OR TRADEMARK NO.**	**PATENT OR TRADEMARK NO.**
1.	**6.**	**11.**
2.	**7.**	**12.**
3.	**8.**	**13.**
4.	**9.**	**14.**
5.	**10.**	**15.**

In the above–entitled case, the following decision has been rendered or judgment issued:

DECISION/JUDGMENT

CLERK John Morrill	(BY) DEPUTY CLERK	DATE

UNITED STATES PATENT AND TRADEMARK OFFICE

UNITED STATES DEPARTMENT OF COMMERCE
United States Patent and Trademark Office
Address: COMMISSIONER FOR PATENTS
P.O. Box 1450
Alexandria, Virginia 22313-1450
www.uspto.gov

APPLICATION NO.	ISSUE DATE	PATENT NO.	ATTORNEY DOCKET NO.	CONFIRMATION NO.
11/237,341	04/09/2013	8416862	BP4880	6712

51472 7590 03/20/2013

GARLICK & MARKISON
P.O. BOX 160727
AUSTIN, TX 78716-0727

ISSUE NOTIFICATION

The projected patent number and issue date are specified above.

Determination of Patent Term Adjustment under 35 U.S.C. 154 (b)
(application filed on or after May 29, 2000)

The Patent Term Adjustment is 2247 day(s). Any patent to issue from the above-identified application will include an indication of the adjustment on the front page.

If a Continued Prosecution Application (CPA) was filed in the above-identified application, the filing date that determines Patent Term Adjustment is the filing date of the most recent CPA.

Applicant will be able to obtain more detailed information by accessing the Patent Application Information Retrieval (PAIR) WEB site (http://pair.uspto.gov).

Any questions regarding the Patent Term Extension or Adjustment determination should be directed to the Office of Patent Legal Administration at (571)-272-7702. Questions relating to issue and publication fee payments should be directed to the Application Assistance Unit (AAU) of the Office of Data Management (ODM) at (571)-272-4200.

APPLICANT(s) (Please see PAIR WEB site http://pair.uspto.gov for additional applicants):

Carlos Aldana, San Francisco, CA;
Joonsuk Kim, San Jose, CA;

The United States represents the largest, most dynamic marketplace in the world and is an unparalleled location for business investment, innovation, and commercialization of new technologies. The USA offers tremendous resources and advantages for those who invest and manufacture goods here. Through SelectUSA, our nation works to encourage and facilitate business investment. To learn more about why the USA is the best country in the world to develop technology, manufacture products, and grow your business, visit SelectUSA.gov.

ZTE, Exhibit 1002-0004

UNITED STATES PATENT AND TRADEMARK OFFICE

UNITED STATES DEPARTMENT OF COMMERCE
United States Patent and Trademark Office
Address: COMMISSIONER FOR PATENTS
P.O. Box 1450
Alexandria, Virginia 22313-1450
www.uspto.gov

APPLICATION NO.	FILING DATE	FIRST NAMED INVENTOR	ATTORNEY DOCKET NO.	CONFIRMATION NO.
11/237,341	09/28/2005	Carlos Aldana	BP4880	6712

51472 7590 03/01/2013

GARLICK & MARKISON
P.O. BOX 160727
AUSTIN, TX 78716-0727

EXAMINER	
NEFF, MICHAEL R	
ART UNIT	**PAPER NUMBER**
2631	

NOTIFICATION DATE	DELIVERY MODE
03/01/2013	ELECTRONIC

Please find below and/or attached an Office communication concerning this application or proceeding.

The time period for reply, if any, is set in the attached communication.

Notice of the Office communication was sent electronically on above-indicated "Notification Date" to the following e-mail address(es):

MMURDOCK@TEXASPATENTS.COM
ghmptocor@texaspatents.com
smcwhinnie@texaspatents.com

ZTE, Exhibit 1002-0005

Response to Rule 312 Communication	Application No.	Applicant(s)
	11/237,341	ALDANA ET AL.
	Examiner	Art Unit
	MICHAEL NEFF	2631

-- The MAILING DATE of this communication appears on the cover sheet with the correspondence address –

1. ☒ The amendment filed on *07 February 2013* under 37 CFR 1.312 has been considered, and has been:

a) ☒ entered.

b) ☐ entered as directed to matters of form not affecting the scope of the invention.

c) ☐ disapproved because the amendment was filed after the payment of the issue fee.
Any amendment filed after the date the issue fee is paid must be accompanied by a petition under 37 CFR 1.313(c)(1) and the required fee to withdraw the application from issue.

d) ☐ disapproved. See explanation below.

e) ☐ entered in part. See explanation below.

/Shuwang Liu/ Supervisory Patent Examiner, Art Unit 2631	/MICHAEL R. NEFF/ Examiner, Art Unit 2631

ZTE, Exhibit 1002-0006

IN THE SPECIFICATION

Please amend the Cross References to Related Applications paragraph as follows:

This application is a continuation-in-part of U.S. Utility Application No. 11/168,793, filed June 28, 2005 which claims priority to U.S. Provisional Patent Application Serial No. 60/673,451, filed April 21, 2005, and this application also claims priority to U.S. Provisional Patent Application Serial No. 60/698,686, filed July 13, 2005, all of which are incorporated herein by reference for all purposes.

ZTE, Exhibit 1002-0007

PART B - FEE(S) TRANSMITTAL

Complete and send this form, together with applicable fee(s), to: Mail **Mail Stop ISSUE FEE**
Commissioner for Patents
P.O. Box 1450
Alexandria, Virginia 22313-1450
or Fax (571)-273-2885

INSTRUCTIONS: This form should be used for transmitting the ISSUE FEE and PUBLICATION FEE (if required). Blocks 1 through 5 should be completed where appropriate. All further correspondence including the Patent, advance orders and notification of maintenance fees will be mailed to the current correspondence address as indicated unless corrected below or directed otherwise in Block 1, by (a) specifying a new correspondence address; and/or (b) indicating a separate "FEE ADDRESS" for maintenance fee notifications.

CURRENT CORRESPONDENCE ADDRESS (Note: Use Block 1 for any change of address)

51472 7590 12/28/2012
GARLICK & MARKISON
P.O. BOX 160727
AUSTIN, TX 78716-0727

Note: A certificate of mailing can only be used for domestic mailings of the Fee(s) Transmittal. This certificate cannot be used for any other accompanying papers. Each additional paper, such as an assignment or formal drawing, must have its own certificate of mailing or transmission.

Certificate of Mailing or Transmission

I hereby certify that this Fee(s) Transmittal is being deposited with the United States Postal Service with sufficient postage for first class mail in an envelope addressed to the Mail Stop ISSUE FEE address above, or being facsimile transmitted to the USPTO (571) 273-2885, on the date indicated below.

(Depositor's name)
(Signature)
(Date)

APPLICATION NO.	FILING DATE	FIRST NAMED INVENTOR	ATTORNEY DOCKET NO.	CONFIRMATION NO.
11/237,341	09/28/2005	Carlos Aldana	BP4880	6712

TITLE OF INVENTION: Efficient feedback of channel information in a closed loop beamforming wireless communication system

APPLN. TYPE	SMALL ENTITY	ISSUE FEE DUE	PUBLICATION FEE DUE	PREV. PAID ISSUE FEE	TOTAL FEE(S) DUE	DATE DUE
nonprovisional	NO	$1770	$300	$0	$2070	03/28/2013

EXAMINER	ART UNIT	CLASS-SUBCLASS
NEFF, MICHAEL R	2631	375-299000

1. Change of correspondence address or indication of "Fee Address" (37 CFR 1.363).

☐ Change of correspondence address (or Change of Correspondence Address form PTO/SB/122) attached.

☒ "Fee Address" indication (or "Fee Address" Indication form PTO/SB/47; Rev 03-02 or more recent) attached. **Use of a Customer Number is required.**

2. For printing on the patent front page, list

(1) the names of up to 3 registered patent attorneys or agents OR, alternatively,

(2) the name of a single firm (having as a member a registered attorney or agent) and the names of up to 2 registered patent attorneys or agents. If no name is listed, no name will be printed.

1 Garlick & Markison
2 Holly L. Rudnick
3

3. ASSIGNEE NAME AND RESIDENCE DATA TO BE PRINTED ON THE PATENT (print or type)

PLEASE NOTE: Unless an assignee is identified below, no assignee data will appear on the patent. If an assignee is identified below, the document has been filed for recordation as set forth in 37 CFR 3.11. Completion of this form is NOT a substitute for filing an assignment.

(A) NAME OF ASSIGNEE: Broadcom Corporation

(B) RESIDENCE: (CITY and STATE OR COUNTRY): Irvine, CA

Please check the appropriate assignee category or categories (will not be printed on the patent) : ☐ Individual ☒ Corporation or other private group entity ☐ Government

4a. The following fee(s) are submitted:

☒ Issue Fee
☒ Publication Fee (No small entity discount permitted)
☐ Advance Order - # of Copies _____

4b. Payment of Fee(s): (**Please first reapply any previously paid issue fee shown above**)

☐ A check is enclosed.
☒ Payment by credit card. ~~Form PTO-2038 is attached.~~
☒ The Director is hereby authorized to charge the required fee(s), any deficiency, or credit any overpayment, to Deposit Account Number 50-2126 (enclose an extra copy of this form).

5. **Change in Entity Status** (from status indicated above)

☐ a. Applicant claims SMALL ENTITY status. See 37 CFR 1.27.

☐ b. Applicant is no longer claiming SMALL ENTITY status. See 37 CFR 1.27(g)(2).

NOTE: The Issue Fee and Publication Fee (if required) will not be accepted from anyone other than the applicant; a registered attorney or agent; or the assignee or other party in interest as shown by the records of the United States Patent and Trademark Office.

Authorized Signature /Holly L. Rudnick/ Date 02/28/2013

Typed or printed name Holly L. Rudnick Registration No. 43,065

This collection of information is required by 37 CFR 1.311. The information is required to obtain or retain a benefit by the public which is to file (and by the USPTO to process) an application. Confidentiality is governed by 35 U.S.C. 122 and 37 CFR 1.14. This collection is estimated to take 12 minutes to complete, including gathering, preparing, and submitting the completed application form to the USPTO. Time will vary depending upon the individual case. Any comments on the amount of time you require to complete this form and/or suggestions for reducing this burden, should be sent to the Chief Information Officer, U.S. Patent and Trademark Office, U.S. Department of Commerce, P.O. Box 1450, Alexandria, Virginia 22313-1450. DO NOT SEND FEES OR COMPLETED FORMS TO THIS ADDRESS. SEND TO: Commissioner for Patents, P.O. Box 1450, Alexandria, Virginia 22313-1450.

Under the Paperwork Reduction Act of 1995, no persons are required to respond to a collection of information unless it displays a valid OMB control number.

ZTE, Exhibit 1002-0008

Docket BP4880

PTO/SB/47 (03-09)
Approved for use through 03/31/2012. OMB 0651-0016
U.S. Patent and Trademark Office; U. S. DEPARTMENT OF COMMERCE
Under the Paperwork Reduction Act of 1995, no persons are required to respond to a collection of information unless it displays a valid OMB control number.

"FEE ADDRESS" INDICATION FORM

Address to:
Mail Stop M Correspondence
Commissioner for Patents
P.O. Box 1450
Alexandria, VA 22313-1450

- OR -

Fax to:
571-273-6500

INSTRUCTIONS: The issue fee must have been paid for application(s) listed on this form. In addition, only an address represented by a Customer Number can be established as the fee address for maintenance fee purposes (hereafter, fee address). A fee address should be established when correspondence related to maintenance fees should be mailed to a different address than the correspondence address for the application. **When to check the first box below:** If you have a Customer Number to represent the fee address. **When to check the second box below:** If you have no Customer Number representing the desired fee address, in which case a completed Request for Customer Number (PTO/SB/125) must be attached to this form. For more information on Customer Numbers, see the Manual of Patent Examining Procedure (MPEP) § 403.

For the following listed application(s), please recognize as the "Fee Address" under the provisions of 37 CFR 1.363 the address associated with:

[X] Customer Number: 51472

OR

[ ] The attached Request for Customer Number (PTO/SB/125) form.

PATENT NUMBER (if known)	APPLICATION NUMBER
	11/237,341

Completed by (check one):

[ ] Applicant/Inventor — /Holly L. Rudnick/ (Signature)

[X] Attorney or Agent of record 43,065 (Reg. No.) — Holly L. Rudnick (Typed or printed name)

[ ] Assignee of record of the entire interest. See 37 CFR 3.71. Statement under 37 CFR 3.73(b) is enclosed. (Form PTO/SB/96) — (214) 856-5372 (Requester's telephone number)

[ ] Assignee recorded at Reel _____ Frame _____ — February 28, 2013 (Date)

NOTE: Signatures of all the inventors or assignees of record of the entire interest or their representative(s) are required. Submit multiple forms if more that one signature is required, see below*.

[X] * Total of 1 forms are submitted.

This collection of information is required by 37 CFR 1.363. The information is required to obtain or retain a benefit by the public which is to file (and by the USPTO to process) an application. Confidentiality is governed by 35 U.S.C. 122 and 37 CFR 1. 11 and 1.14. This collection is estimated to take 5 minutes to complete, including gathering, preparing, and submitting the completed application form to the USPTO. Time will vary depending upon the individual case. Any comments on the amount of time you require to complete this form and/or suggestions for reducing this burden, should be sent to the Chief Information Officer, U.S. Patent and Trademark Office, U.S. Department of Commerce, P.O. Box 1450, Alexandria, VA 22313- 1450. DO NOT SEND COMPLETED FORMS TO THIS ADDRESS.
SEND TO: Mail Stop M Correspondence, Commissioner for Patents, P.O. Box 1450, Alexandria, VA 22313-1450.
If you need assistance in completing the form, call 1-800-PTO-9199 and select option 2.

Certification Under 37 C.F.R. 1.8

Date of Mailing or Transmission: February 28, 2013. I hereby certify that I have caused the document indicated herein on the date indicated above to be transmitted via the Office electronic filing system in accordance with 37 C.F.R. Sec. 1.6(a)(4).

BY: /Vicki L. Andrews/ (signature) Name: Vicki L. Andrews (typed name)

PATENT APPLICATION
IN THE UNITED STATES PATENT AND TRADEMARK OFFICE

First Named Inventor: Carlos Aldana
Application No: 11/237,341
Filing Date: 09/28/2005
Confirmation No. 6712
Examiner: Michael R. Neff
Art Unit: 2631
Docket No: BP4880
Title: Efficient feedback of channel information in a closed loop beamforming wireless communication system

COMMENT ON STATEMENT OF REASONS FOR ALLOWANCE

Date: February 28, 2013

Mail Stop Issue Fee
Commissioner for Patents
P.O. Box 1450
Alexandria, Virginia 22313-1450

Applicant recognizes that in accordance with M.P.E.P. § 1302.14, the Examiner's reasons for allowance need not set forth all of the details as to why the claims are allowed. Applicant does not concede that the Examiner's stated reasons for allowance are the only grounds for patentability of the allowed claims or that any element excluded from the Examiner's Reasons for Allowance is taught or suggested by the art of record. Further, Applicant does not concede that all of the elements identified by the Examiner are necessary to distinguish the prior art of record or to satisfy the requirements of 35 U.S.C. § 112. In addition, the Examiner does not assert, and Applicant would not concede, that the Examiner's reasons have any bearing on the patentability of claims in any other applications directed to the disclosed subject matter.

Each dependent claim stands on its own and is allowable on its own merits. In particular, each dependent claim may be allowable on the basis of a combination of some of the features recited in the dependent claim and its base claim(s), which combination of features may not include all of the elements identified in the Examiner's reasons for allowance.

ZTE, Exhibit 1002-0010

No additional fees are believed to be due. In the event that additional fees are due or a credit for an overpayment is due, the Commissioner is hereby authorized to charge any additional fees or credit any overpayment to Garlick & Markison Deposit Account No. 50-2126.

RESPECTFULLY SUBMITTED,

By: /Holly L. Rudnick/ Reg. No. 43,065
Holly L. Rudnick
Garlick & Markison
P. O. Box 160727
Austin, TX 78716-0727
Phone: (214) 856-5372
Fax: (888) 332-2640
email: hrudnick@texaspatents.com

ZTE, Exhibit 1002-0011

Electronic Patent Application Fee Transmittal

Application Number:	11237341
Filing Date:	28-Sep-2005
Title of Invention:	Efficient feedback of channel information in a closed loop beamforming wireless communication system
First Named Inventor/Applicant Name:	Carlos Aldana
Filer:	Holly L. Rudnick/Vicki Andrews
Attorney Docket Number:	BP4880

Filed as Large Entity

Utility under 35 USC 111(a) Filing Fees

Description	Fee Code	Quantity	Amount	Sub-Total in USD($)
Basic Filing:				
Pages:				
Claims:				
Miscellaneous-Filing:				
Petition:				
Patent-Appeals-and-Interference:				
Post-Allowance-and-Post-Issuance:				
Utility Appl Issue Fee	1501	1	1770	1770
Publ. Fee- early, voluntary, or normal	1504	1	300	300

ZTE, Exhibit 1002-0012

Description	Fee Code	Quantity	Amount	Sub-Total in USD($)
Extension-of-Time:				
Miscellaneous:				
		Total in USD ($)		**2070**

Electronic Acknowledgement Receipt

EFS ID:	15075456
Application Number:	11237341
International Application Number:	
Confirmation Number:	6712
Title of Invention:	Efficient feedback of channel information in a closed loop beamforming wireless communication system
First Named Inventor/Applicant Name:	Carlos Aldana
Customer Number:	51472
Filer:	Holly L. Rudnick/Vicki Andrews
Filer Authorized By:	Holly L. Rudnick
Attorney Docket Number:	BP4880
Receipt Date:	28-FEB-2013
Filing Date:	28-SEP-2005
Time Stamp:	11:38:03
Application Type:	Utility under 35 USC 111(a)

Payment information:

Submitted with Payment	yes
Payment Type	Credit Card
Payment was successfully received in RAM	$2070
RAM confirmation Number	13391
Deposit Account	502126
Authorized User	ANDREWS, VICKI
The Director of the USPTO is hereby authorized to charge indicated fees and credit any overpayment as follows: Charge any Additional Fees required under 37 C.F.R. Section 1.20 (Post Issuance fees) Charge any Additional Fees required under 37 C.F.R. Section 1.21 (Miscellaneous fees and charges)	

File Listing:

Document Number	Document Description	File Name	File Size(Bytes)/ Message Digest	Multi Part /.zip	Pages (if appl.)
1	Issue Fee Payment (PTO-85B)	BP4880-IssueFeeTransmittal.pdf	98311 d8ca02910caa264b0649593a0e1a95cb8f85aa5f	no	1
Warnings:					
Information:					
2	Miscellaneous Incoming Letter	BP4880-Fee-Address-Form.pdf	1612868 1430eb624d6618253af655c926936b4988259515	no	1
Warnings:					
Information:					
3	Post Allowance Communication - Incoming	BP4880-Comment.pdf	11023 d28a0702b40e2c3098a1c0c05f77da69293e2af4	no	2
Warnings:					
Information:					
4	Fee Worksheet (SB06)	fee-info.pdf	31528 6c4844e4c3f5c5fd4fc1e87ee0bc04c30d795fee	no	2
Warnings:					
Information:					
		Total Files Size (in bytes):	1753730		

This Acknowledgement Receipt evidences receipt on the noted date by the USPTO of the indicated documents, characterized by the applicant, and including page counts, where applicable. It serves as evidence of receipt similar to a Post Card, as described in MPEP 503.

<u>New Applications Under 35 U.S.C. 111</u>
If a new application is being filed and the application includes the necessary components for a filing date (see 37 CFR 1.53(b)-(d) and MPEP 506), a Filing Receipt (37 CFR 1.54) will be issued in due course and the date shown on this Acknowledgement Receipt will establish the filing date of the application.

<u>National Stage of an International Application under 35 U.S.C. 371</u>
If a timely submission to enter the national stage of an international application is compliant with the conditions of 35 U.S.C. 371 and other applicable requirements a Form PCT/DO/EO/903 indicating acceptance of the application as a national stage submission under 35 U.S.C. 371 will be issued in addition to the Filing Receipt, in due course.

<u>New International Application Filed with the USPTO as a Receiving Office</u>
If a new international application is being filed and the international application includes the necessary components for an international filing date (see PCT Article 11 and MPEP 1810), a Notification of the International Application Number and of the International Filing Date (Form PCT/RO/105) will be issued in due course, subject to prescriptions concerning national security, and the date shown on this Acknowledgement Receipt will establish the international filing date of the application.

Certification Under 37 C.F.R. 1.8

Date of Mailing or Transmission: February 7, 2013, I hereby certify that I have caused the document indicated herein on the date indicated above to be transmitted via the Office electronic filing system in accordance with 37 C.F.R. Sec. 1.6(a)(4).

BY: /Vicki L. Andrews / (signature) Name: Vicki L. Andrews (typed name)

PATENT APPLICATION
IN THE UNITED STATES PATENT AND TRADEMARK OFFICE

Applicant(s):	Carlos Aldana	**Docket:**	BP4880
Serial No.:	11/237,341	**Art Unit:**	2631
Filed:	09/28/2005	**Examiner:**	Michael R. Neff
Title:	Efficient Feedback of Channel Information in a Closed Loop Beamforming Wireless Communication System		

AMENDMENT UNDER § 312

February 7, 2013

M/S Issue Fee
Commissioner for Patents
P. O. Box 1450
Alexandria, VA 22313-1450

1.312 AMENDMENT

This amendment is being filed to amend the priority paragraph. No new matter is being added herein.

ZTE, Exhibit 1002-0016

IN THE SPECIFICATION

Please amend the Cross References to Related Applications paragraph as follows:

This application is a continuation-in-part of U.S. Utility Application No. 11/168,793, filed June 28, 2005 which claims priority to U.S. Provisional Patent Application Serial No. 60/673,451, filed April 21, 2005, and this application also claims priority to U.S. Provisional Patent Application Serial No. 60/698,686, filed July 13, 2005, all of which are incorporated herein by reference for all purposes.

ZTE, Exhibit 1002-0017

REMARKS

The amendment to the section entitled "Cross Reference to Related Applications" is made to clarify and more clearly identify the priority claims. No new matter has been added. The priority claim as amended does not make any priority claim that was not previously made in the Specification. Applicants provide herewith a Supplemental Application Data Sheet. Applicants respectfully request an updated Filing Receipt.

No additional fees are believed to be due. In the event that additional fees are due or a credit for an overpayment is due, the Commissioner is hereby authorized to charge any additional fees or credit any overpayment to Garlick & Markison Deposit Account No. 50-2126.

The Examiner is invited to contact the undersigned by telephone or email if the Examiner believes that such a communication would advance the prosecution of the present invention.

RESPECTFULLY SUBMITTED,

By: /Holly L. Rudnick/ Reg. No. 43,065
Holly L. Rudnick
Garlick & Markison
P. O. Box 160727
Austin, TX 78716-0727
Phone: (214) 856-5372
Fax: (888) 332-2640
email: hrudnick@texaspatents.com

ZTE, Exhibit 1002-0018

U.S. Application Number: 11/237,341

SUPPLEMENTAL APPLICATION DATA SHEET

Kindly amend the domestic benefit claim, as follows:

This application is a continuation-in-part of U.S. Utility Application No. 11/168,793, filed June 28, 2005 which claims priority to U.S. Provisional Patent Application Serial No. 60/673,451, filed April 21, 2005, and this application also claims priority to U.S. Provisional Patent Application Serial No. 60/698,686, filed July 13, 2005, all of which are incorporated herein by reference for all purposes.

RESPECTFULLY SUBMITTED,

By: /Holly L. Rudnick/ Reg. No. 43,065
Holly L. Rudnick
Garlick & Markison
P. O. Box 160727
Austin, TX 78716-0727
Phone: (214) 856-5372
Fax: (888) 332-2640
email: hrudnick@texaspatents.com

Electronic Acknowledgement Receipt

EFS ID:	14904853
Application Number:	11237341
International Application Number:	
Confirmation Number:	6712
Title of Invention:	Efficient feedback of channel information in a closed loop beamforming wireless communication system
First Named Inventor/Applicant Name:	Carlos Aldana
Customer Number:	51472
Filer:	Jessica Smith/VICKI ANDREWS
Filer Authorized By:	Jessica Smith
Attorney Docket Number:	BP4880
Receipt Date:	07-FEB-2013
Filing Date:	28-SEP-2005
Time Stamp:	16:06:19
Application Type:	Utility under 35 USC 111(a)

Payment information:

Submitted with Payment	no

File Listing:

Document Number	Document Description	File Name	File Size(Bytes)/ Message Digest	Multi Part /.zip	Pages (if appl.)
1		BP4880-312-Amendment-bz.pdf	19206 6f8d1f515916217e9df591d9caa2f38258d57c5e	yes	4

ZTE, Exhibit 1002-0020

	Multipart Description/PDF files in .zip description		
	Document Description	**Start**	**End**
	Amendment after Notice of Allowance (Rule 312)	1	1
	Specification	2	2
	Applicant Arguments/Remarks Made in an Amendment	3	4
Warnings:			
Information:			
	Total Files Size (in bytes):	19206	

This Acknowledgement Receipt evidences receipt on the noted date by the USPTO of the indicated documents, characterized by the applicant, and including page counts, where applicable. It serves as evidence of receipt similar to a Post Card, as described in MPEP 503.

New Applications Under 35 U.S.C. 111
If a new application is being filed and the application includes the necessary components for a filing date (see 37 CFR 1.53(b)-(d) and MPEP 506), a Filing Receipt (37 CFR 1.54) will be issued in due course and the date shown on this Acknowledgement Receipt will establish the filing date of the application.

National Stage of an International Application under 35 U.S.C. 371
If a timely submission to enter the national stage of an international application is compliant with the conditions of 35 U.S.C. 371 and other applicable requirements a Form PCT/DO/EO/903 indicating acceptance of the application as a national stage submission under 35 U.S.C. 371 will be issued in addition to the Filing Receipt, in due course.

New International Application Filed with the USPTO as a Receiving Office
If a new international application is being filed and the international application includes the necessary components for an international filing date (see PCT Article 11 and MPEP 1810), a Notification of the International Application Number and of the International Filing Date (Form PCT/RO/105) will be issued in due course, subject to prescriptions concerning national security, and the date shown on this Acknowledgement Receipt will establish the international filing date of the application.

UNITED STATES PATENT AND TRADEMARK OFFICE

UNITED STATES DEPARTMENT OF COMMERCE
United States Patent and Trademark Office
Address: COMMISSIONER FOR PATENTS
P.O. Box 1450
Alexandria, Virginia 22313-1450
www.uspto.gov

NOTICE OF ALLOWANCE AND FEE(S) DUE

51472 7590 12/28/2012

GARLICK & MARKISON
P.O. BOX 160727
AUSTIN, TX 78716-0727

EXAMINER
NEFF, MICHAEL R

ART UNIT	PAPER NUMBER
2631	

DATE MAILED: 12/28/2012

APPLICATION NO.	FILING DATE	FIRST NAMED INVENTOR	ATTORNEY DOCKET NO.	CONFIRMATION NO.
11/237,341	09/28/2005	Carlos Aldana	BP4880	6712

TITLE OF INVENTION: Efficient feedback of channel information in a closed loop beamforming wireless communication system

APPLN. TYPE	SMALL ENTITY	ISSUE FEE DUE	PUBLICATION FEE DUE	PREV. PAID ISSUE FEE	TOTAL FEE(S) DUE	DATE DUE
nonprovisional	NO	$1770	$300	$0	$2070	03/28/2013

THE APPLICATION IDENTIFIED ABOVE HAS BEEN EXAMINED AND IS ALLOWED FOR ISSUANCE AS A PATENT. PROSECUTION ON THE MERITS IS CLOSED. THIS NOTICE OF ALLOWANCE IS NOT A GRANT OF PATENT RIGHTS. THIS APPLICATION IS SUBJECT TO WITHDRAWAL FROM ISSUE AT THE INITIATIVE OF THE OFFICE OR UPON PETITION BY THE APPLICANT. SEE 37 CFR 1.313 AND MPEP 1308.

THE ISSUE FEE AND PUBLICATION FEE (IF REQUIRED) MUST BE PAID WITHIN THREE MONTHS FROM THE MAILING DATE OF THIS NOTICE OR THIS APPLICATION SHALL BE REGARDED AS ABANDONED. THIS STATUTORY PERIOD CANNOT BE EXTENDED. SEE 35 U.S.C. 151. THE ISSUE FEE DUE INDICATED ABOVE DOES NOT REFLECT A CREDIT FOR ANY PREVIOUSLY PAID ISSUE FEE IN THIS APPLICATION. IF AN ISSUE FEE HAS PREVIOUSLY BEEN PAID IN THIS APPLICATION (AS SHOWN ABOVE), THE RETURN OF PART B OF THIS FORM WILL BE CONSIDERED A REQUEST TO REAPPLY THE PREVIOUSLY PAID ISSUE FEE TOWARD THE ISSUE FEE NOW DUE.

HOW TO REPLY TO THIS NOTICE:

I. Review the SMALL ENTITY status shown above.

If the SMALL ENTITY is shown as YES, verify your current SMALL ENTITY status:

A. If the status is the same, pay the TOTAL FEE(S) DUE shown above.

B. If the status above is to be removed, check box 5b on Part B - Fee(s) Transmittal and pay the PUBLICATION FEE (if required) and twice the amount of the ISSUE FEE shown above, or

If the SMALL ENTITY is shown as NO:

A. Pay TOTAL FEE(S) DUE shown above, or

B. If applicant claimed SMALL ENTITY status before, or is now claiming SMALL ENTITY status, check box 5a on Part B - Fee(s) Transmittal and pay the PUBLICATION FEE (if required) and 1/2 the ISSUE FEE shown above.

II. PART B - FEE(S) TRANSMITTAL, or its equivalent, must be completed and returned to the United States Patent and Trademark Office (USPTO) with your ISSUE FEE and PUBLICATION FEE (if required). If you are charging the fee(s) to your deposit account, section "4b" of Part B - Fee(s) Transmittal should be completed and an extra copy of the form should be submitted. If an equivalent of Part B is filed, a request to reapply a previously paid issue fee must be clearly made, and delays in processing may occur due to the difficulty in recognizing the paper as an equivalent of Part B.

III. All communications regarding this application must give the application number. Please direct all communications prior to issuance to Mail Stop ISSUE FEE unless advised to the contrary.

IMPORTANT REMINDER: Utility patents issuing on applications filed on or after Dec. 12, 1980 may require payment of maintenance fees. It is patentee's responsibility to ensure timely payment of maintenance fees when due.

ZTE, Exhibit 1002-0022

PART B - FEE(S) TRANSMITTAL

Complete and send this form, together with applicable fee(s), to: Mail **Mail Stop ISSUE FEE**
Commissioner for Patents
P.O. Box 1450
Alexandria, Virginia 22313-1450
or Fax (571)-273-2885

INSTRUCTIONS: This form should be used for transmitting the ISSUE FEE and PUBLICATION FEE (if required). Blocks 1 through 5 should be completed where appropriate. All further correspondence including the Patent, advance orders and notification of maintenance fees will be mailed to the current correspondence address as indicated unless corrected below or directed otherwise in Block 1, by (a) specifying a new correspondence address; and/or (b) indicating a separate "FEE ADDRESS" for maintenance fee notifications.

CURRENT CORRESPONDENCE ADDRESS (Note: Use Block 1 for any change of address)

51472 7590 12/28/2012
GARLICK & MARKISON
P.O. BOX 160727
AUSTIN, TX 78716-0727

Note: A certificate of mailing can only be used for domestic mailings of the Fee(s) Transmittal. This certificate cannot be used for any other accompanying papers. Each additional paper, such as an assignment or formal drawing, must have its own certificate of mailing or transmission.

Certificate of Mailing or Transmission

I hereby certify that this Fee(s) Transmittal is being deposited with the United States Postal Service with sufficient postage for first class mail in an envelope addressed to the Mail Stop ISSUE FEE address above, or being facsimile transmitted to the USPTO (571) 273-2885, on the date indicated below.

(Depositor's name)
(Signature)
(Date)

APPLICATION NO.	FILING DATE	FIRST NAMED INVENTOR	ATTORNEY DOCKET NO.	CONFIRMATION NO.
11/237,341	09/28/2005	Carlos Aldana	BP4880	6712

TITLE OF INVENTION: Efficient feedback of channel information in a closed loop beamforming wireless communication system

APPLN. TYPE	SMALL ENTITY	ISSUE FEE DUE	PUBLICATION FEE DUE	PREV. PAID ISSUE FEE	TOTAL FEE(S) DUE	DATE DUE
nonprovisional	NO	$1770	$300	$0	$2070	03/28/2013

EXAMINER	ART UNIT	CLASS-SUBCLASS
NEFF, MICHAEL R	2631	375-299000

1. Change of correspondence address or indication of "Fee Address" (37 CFR 1.363).

❑ Change of correspondence address (or Change of Correspondence Address form PTO/SB/122) attached.

❑ "Fee Address" indication (or "Fee Address" Indication form PTO/SB/47; Rev 03-02 or more recent) attached. **Use of a Customer Number is required.**

2. For printing on the patent front page, list

(1) the names of up to 3 registered patent attorneys or agents OR, alternatively,

(2) the name of a single firm (having as a member a registered attorney or agent) and the names of up to 2 registered patent attorneys or agents. If no name is listed, no name will be printed.

1 _____

2 _____

3 _____

3. ASSIGNEE NAME AND RESIDENCE DATA TO BE PRINTED ON THE PATENT (print or type)

PLEASE NOTE: Unless an assignee is identified below, no assignee data will appear on the patent. If an assignee is identified below, the document has been filed for recordation as set forth in 37 CFR 3.11. Completion of this form is NOT a substitute for filing an assignment.

(A) NAME OF ASSIGNEE (B) RESIDENCE: (CITY and STATE OR COUNTRY)

Please check the appropriate assignee category or categories (will not be printed on the patent) : ❑ Individual ❑ Corporation or other private group entity ❑ Government

4a. The following fee(s) are submitted:

❑ Issue Fee

❑ Publication Fee (No small entity discount permitted)

❑ Advance Order - # of Copies _____

4b. Payment of Fee(s): (**Please first reapply any previously paid issue fee shown above**)

❑ A check is enclosed.

❑ Payment by credit card. Form PTO-2038 is attached.

❑ The Director is hereby authorized to charge the required fee(s), any deficiency, or credit any overpayment, to Deposit Account Number _____ (enclose an extra copy of this form).

5. **Change in Entity Status** (from status indicated above)

❑ a. Applicant claims SMALL ENTITY status. See 37 CFR 1.27.

❑ b. Applicant is no longer claiming SMALL ENTITY status. See 37 CFR 1.27(g)(2).

NOTE: The Issue Fee and Publication Fee (if required) will not be accepted from anyone other than the applicant; a registered attorney or agent; or the assignee or other party in interest as shown by the records of the United States Patent and Trademark Office.

Authorized Signature _____ Date _____

Typed or printed name _____ Registration No. _____

This collection of information is required by 37 CFR 1.311. The information is required to obtain or retain a benefit by the public which is to file (and by the USPTO to process) an application. Confidentiality is governed by 35 U.S.C. 122 and 37 CFR 1.14. This collection is estimated to take 12 minutes to complete, including gathering, preparing, and submitting the completed application form to the USPTO. Time will vary depending upon the individual case. Any comments on the amount of time you require to complete this form and/or suggestions for reducing this burden, should be sent to the Chief Information Officer, U.S. Patent and Trademark Office, U.S. Department of Commerce, P.O. Box 1450, Alexandria, Virginia 22313-1450. DO NOT SEND FEES OR COMPLETED FORMS TO THIS ADDRESS. SEND TO: Commissioner for Patents, P.O. Box 1450, Alexandria, Virginia 22313-1450.

Under the Paperwork Reduction Act of 1995, no persons are required to respond to a collection of information unless it displays a valid OMB control number.

ZTE, Exhibit 1002-0023

UNITED STATES PATENT AND TRADEMARK OFFICE

UNITED STATES DEPARTMENT OF COMMERCE
United States Patent and Trademark Office
Address: COMMISSIONER FOR PATENTS
P.O. Box 1450
Alexandria, Virginia 22313-1450
www.uspto.gov

APPLICATION NO.	FILING DATE	FIRST NAMED INVENTOR	ATTORNEY DOCKET NO.	CONFIRMATION NO.
11/237,341	09/28/2005	Carlos Aldana	BP4880	6712

51472 7590 12/28/2012

GARLICK & MARKISON
P.O. BOX 160727
AUSTIN, TX 78716-0727

EXAMINER	
NEFF, MICHAEL R	
ART UNIT	PAPER NUMBER
2631	

DATE MAILED: 12/28/2012

Determination of Patent Term Adjustment under 35 U.S.C. 154 (b)
(application filed on or after May 29, 2000)

The Patent Term Adjustment to date is 1948 day(s). If the issue fee is paid on the date that is three months after the mailing date of this notice and the patent issues on the Tuesday before the date that is 28 weeks (six and a half months) after the mailing date of this notice, the Patent Term Adjustment will be 1948 day(s).

If a Continued Prosecution Application (CPA) was filed in the above-identified application, the filing date that determines Patent Term Adjustment is the filing date of the most recent CPA.

Applicant will be able to obtain more detailed information by accessing the Patent Application Information Retrieval (PAIR) WEB site (http://pair.uspto.gov).

Any questions regarding the Patent Term Extension or Adjustment determination should be directed to the Office of Patent Legal Administration at (571)-272-7702. Questions relating to issue and publication fee payments should be directed to the Customer Service Center of the Office of Patent Publication at 1-(888)-786-0101 or (571)-272-4200.

ZTE, Exhibit 1002-0024

Privacy Act Statement

The Privacy Act of 1974 (P.L. 93-579) requires that you be given certain information in connection with your submission of the attached form related to a patent application or patent. Accordingly, pursuant to the requirements of the Act, please be advised that: (1) the general authority for the collection of this information is 35 U.S.C. 2(b)(2); (2) furnishing of the information solicited is voluntary; and (3) the principal purpose for which the information is used by the U.S. Patent and Trademark Office is to process and/or examine your submission related to a patent application or patent. If you do not furnish the requested information, the U.S. Patent and Trademark Office may not be able to process and/or examine your submission, which may result in termination of proceedings or abandonment of the application or expiration of the patent.

The information provided by you in this form will be subject to the following routine uses:

1. The information on this form will be treated confidentially to the extent allowed under the Freedom of Information Act (5 U.S.C. 552) and the Privacy Act (5 U.S.C 552a). Records from this system of records may be disclosed to the Department of Justice to determine whether disclosure of these records is required by the Freedom of Information Act.
2. A record from this system of records may be disclosed, as a routine use, in the course of presenting evidence to a court, magistrate, or administrative tribunal, including disclosures to opposing counsel in the course of settlement negotiations.
3. A record in this system of records may be disclosed, as a routine use, to a Member of Congress submitting a request involving an individual, to whom the record pertains, when the individual has requested assistance from the Member with respect to the subject matter of the record.
4. A record in this system of records may be disclosed, as a routine use, to a contractor of the Agency having need for the information in order to perform a contract. Recipients of information shall be required to comply with the requirements of the Privacy Act of 1974, as amended, pursuant to 5 U.S.C. 552a(m).
5. A record related to an International Application filed under the Patent Cooperation Treaty in this system of records may be disclosed, as a routine use, to the International Bureau of the World Intellectual Property Organization, pursuant to the Patent Cooperation Treaty.
6. A record in this system of records may be disclosed, as a routine use, to another federal agency for purposes of National Security review (35 U.S.C. 181) and for review pursuant to the Atomic Energy Act (42 U.S.C. 218(c)).
7. A record from this system of records may be disclosed, as a routine use, to the Administrator, General Services, or his/her designee, during an inspection of records conducted by GSA as part of that agency's responsibility to recommend improvements in records management practices and programs, under authority of 44 U.S.C. 2904 and 2906. Such disclosure shall be made in accordance with the GSA regulations governing inspection of records for this purpose, and any other relevant (i.e., GSA or Commerce) directive. Such disclosure shall not be used to make determinations about individuals.
8. A record from this system of records may be disclosed, as a routine use, to the public after either publication of the application pursuant to 35 U.S.C. 122(b) or issuance of a patent pursuant to 35 U.S.C. 151. Further, a record may be disclosed, subject to the limitations of 37 CFR 1.14, as a routine use, to the public if the record was filed in an application which became abandoned or in which the proceedings were terminated and which application is referenced by either a published application, an application open to public inspection or an issued patent.
9. A record from this system of records may be disclosed, as a routine use, to a Federal, State, or local law enforcement agency, if the USPTO becomes aware of a violation or potential violation of law or regulation.

Notice of Allowability	Application No.	Applicant(s)	
	11/237,341	ALDANA ET AL.	
	Examiner	Art Unit	
	MICHAEL NEFF	2631	

-- The MAILING DATE of this communication appears on the cover sheet with the correspondence address--

All claims being allowable, PROSECUTION ON THE MERITS IS (OR REMAINS) CLOSED in this application. If not included herewith (or previously mailed), a Notice of Allowance (PTOL-85) or other appropriate communication will be mailed in due course. **THIS NOTICE OF ALLOWABILITY IS NOT A GRANT OF PATENT RIGHTS.** This application is subject to withdrawal from issue at the initiative of the Office or upon petition by the applicant. See 37 CFR 1.313 and MPEP 1308.

1. ☒ This communication is responsive to *Patent Board decision filed 12/14/2012*.

2. ☐ An election was made by the applicant in response to a restriction requirement set forth during the interview on _____; the restriction requirement and election have been incorporated into this action.

3. ☒ The allowed claim(s) is/are *1-20*. As a result of the allowed claim(s), you may be eligible to benefit from the **Patent Prosecution Highway** program at a participating intellectual property office for the corresponding application. For more information, please see http://www.uspto.gov/patents/init_events/pph/index.jsp or send an inquiry to PPHfeedback@uspto.gov .

4. ☐ Acknowledgment is made of a claim for foreign priority under 35 U.S.C. § 119(a)-(d) or (f).
   a) ☐ All b) ☐ Some* c) ☐ None of the:
      1. ☐ Certified copies of the priority documents have been received.
      2. ☐ Certified copies of the priority documents have been received in Application No. _____ .
      3. ☐ Copies of the certified copies of the priority documents have been received in this national stage application from the International Bureau (PCT Rule 17.2(a)).

   * Certified copies not received: _____.

Applicant has THREE MONTHS FROM THE "MAILING DATE" of this communication to file a reply complying with the requirements noted below. Failure to timely comply will result in ABANDONMENT of this application.
THIS THREE-MONTH PERIOD IS NOT EXTENDABLE.

5. ☐ CORRECTED DRAWINGS (as "replacement sheets") must be submitted.
   ☐ including changes required by the attached Examiner's Amendment / Comment or in the Office action of Paper No./Mail Date _____.

   Identifying indicia such as the application number (see 37 CFR 1.84(c)) should be written on the drawings in the front (not the back) of each sheet. Replacement sheet(s) should be labeled as such in the header according to 37 CFR 1.121(d).

6. ☐ DEPOSIT OF and/or INFORMATION about the deposit of BIOLOGICAL MATERIAL must be submitted. Note the attached Examiner's comment regarding REQUIREMENT FOR THE DEPOSIT OF BIOLOGICAL MATERIAL.

Attachment(s)

1. ☐ Notice of References Cited (PTO-892)
2. ☐ Information Disclosure Statements (PTO/SB/08), Paper No./Mail Date _____
3. ☐ Examiner's Comment Regarding Requirement for Deposit of Biological Material
4. ☒ Interview Summary (PTO-413), Paper No./Mail Date *12/17/2012* .
5. ☒ Examiner's Amendment/Comment
6. ☒ Examiner's Statement of Reasons for Allowance
7. ☐ Other _____.

/MICHAEL R. NEFF/
Examiner, Art Unit 2631

ZTE, Exhibit 1002-0026

Examiner-Initiated Interview Summary	**Application No.** 11/237,341	**Applicant(s)** ALDANA ET AL.	
	Examiner MICHAEL NEFF	**Art Unit** 2631	

All participants (applicant, applicant's representative, PTO personnel):

(1) *MICHAEL NEFF*. (3)_____.

(2) *Holly Rudnick*. (4)_____.

Date of Interview: *17 December 2012*.

Type: ☒ Telephonic ☐ Video Conference
☐ Personal [copy given to: ☐ applicant ☐ applicant's representative]

Exhibit shown or demonstration conducted: ☐ Yes ☒ No.
If Yes, brief description: _____.

Issues Discussed ☐101 ☐112 ☐102 ☐103 ☒Others
(For each of the checked box(es) above, please describe below the issue and detailed description of the discussion)

Claim(s) discussed: *6*.

Identification of prior art discussed: *n/a*.

Substance of Interview
(For each issue discussed, provide a detailed description and indicate if agreement was reached. Some topics may include: identification or clarification of a reference or a portion thereof, claim interpretation, proposed amendments, arguments of any applied references etc...)

Discussed examiners amendments to detail every element of the claimed equations.

Applicant recordation instructions: It is not necessary for applicant to provide a separate record of the substance of interview.

Examiner recordation instructions: Examiners must summarize the substance of any interview of record. A complete and proper recordation of the substance of an interview should include the items listed in MPEP 713.04 for complete and proper recordation including the identification of the general thrust of each argument or issue discussed, a general indication of any other pertinent matters discussed regarding patentability and the general results or outcome of the interview, to include an indication as to whether or not agreement was reached on the issues raised.

☐ Attachment

/MICHAEL R. NEFF/ Examiner, Art Unit 2631	

ZTE, Exhibit 1002-0027

DETAILED ACTION

EXAMINER'S AMENDMENT

1. An Examiner's amendment to the record appears below. Should the changes and/or additions be unacceptable to the applicant, an amendment may be filed as provided by 37 CFR 1.312. To ensure consideration of such an amendment, it MUST be submitted no later than the payment of the issue fee.

Authorization for this Examiner's amendment was given in a telephonic interview with Holly Rudnick on 12/17/2012.

Please make the following amendments to the claims:

1) In claim 6, line 8; please amend 'Rotation.' to read "Rotation, wherein N is a number of transmit antennas, M is a number of receive antennas, and wherein i and j are each integers."
2) In claim 14, line 8; please amend 'Rotation.' to read "Rotation, wherein N is a number of transmit antennas, M is a number of receive antennas, and wherein i and j are each integers."
3) In claim 19, line 11; please amend 'Rotation.' to read "Rotation, wherein N is a number of transmit antennas, M is a number of receive antennas, and wherein i and j are each integers."

Response to Arguments

2. Applicant's request for reconsideration of the finality of the rejection of the last Office action is persuasive in light of the Patent Board decision and, therefore, the finality of that action is withdrawn.

Allowable Subject Matter

3. Claims 1-20 are allowed.

4. The following is an examiner's statement of reasons for allowance: The above cited claims are allowable in light of the grounds presented in the response and decision from the Patent Board of Appeals.

Any comments considered necessary by applicant must be submitted no later than the payment of the issue fee and, to avoid processing delays, should preferably accompany the issue fee. Such submissions should be clearly labeled "Comments on Statement of Reasons for Allowance."

Conclusion

Any inquiry concerning this communication or earlier communications from the examiner should be directed to MICHAEL NEFF whose telephone number is (571)270-1848. The examiner can normally be reached on Monday - Friday 8:00am - 4:30pm EST ALT Fridays.

If attempts to reach the examiner by telephone are unsuccessful, the examiner's supervisor, Shuwang Liu can be reached on (571)272-3036. The fax phone number for the organization where this application or proceeding is assigned is 571-273-8300.

Information regarding the status of an application may be obtained from the Patent Application Information Retrieval (PAIR) system. Status information for published applications may be obtained from either Private PAIR or Public PAIR. Status information for unpublished applications is available through Private PAIR only. For more information about the PAIR system, see http://pair-direct.uspto.gov. Should you have questions on access to the Private PAIR system, contact the Electronic Business Center (EBC) at 866-217-9197 (toll-free). If you would like assistance from a USPTO Customer Service Representative or access to the automated information system, call 800-786-9199 (IN USA OR CANADA) or 571-272-1000.

/MICHAEL R. NEFF/
Examiner, Art Unit 2631
/Shuwang Liu/
Supervisory Patent Examiner, Art Unit 2631

EAST Search History

EAST Search History (Prior Art)

Ref #	Hits	Search Query	DBs	Default Operator	Plurals	Time Stamp
S1	2	"US 20060239374"	US-PGPUB; USPAT; USOCR; DERWENT	OR	ON	2008/07/24 08:45
S2	19	("20050286663" | "20060067428" | "20060155534" | "20060234645" | "3858221" | "3916533" | "4843631" | "5541607").PN.	US-PGPUB; USPAT; EPO; JPO; DERWENT	OR	ON	2008/07/24 08:54
S3	508	375/299.ccls.	US-PGPUB; USPAT; EPO; JPO; DERWENT	OR	ON	2008/07/24 09:54
S4	17	((CARLOS) near2 (ALDANA)).INV.	US-PGPUB; USPAT	OR	ON	2008/07/24 09:55
S5	37	((JOONSUK) near2 (KIM)).INV.	US-PGPUB; USPAT	OR	ON	2008/07/24 09:55
S6	51	S4 or S5	US-PGPUB; USPAT; EPO; JPO; DERWENT	OR	ON	2008/07/24 09:56
S7	23	S6 and beamform$3	US-PGPUB; USPAT; EPO; JPO; DERWENT	OR	ON	2008/07/24 09:56
S8	267	SVD and beamform$3	US-PGPUB; USPAT; EPO; JPO; DERWENT	OR	ON	2008/07/24 10:01
S9	15	S8 and (response same unitary)	US-PGPUB; USPAT; EPO; JPO; DERWENT	OR	ON	2008/07/24 10:05
S10	45	(response same (unitary with matrix) same transmitt$3 same receiv$3)	US-PGPUB; USPAT; EPO; JPO; DERWENT	OR	ON	2008/07/24 10:12
S11	65	(feedback$3 same (unitary with matrix) same transmitt$3)	US-PGPUB; USPAT; EPO; JPO; DERWENT	OR	ON	2008/07/24 11:12
S12	320	(feedback$3 same ((unitary with matrix) or beamforming) same transmitt$3)	US-PGPUB; USPAT; EPO; JPO; DERWENT	OR	ON	2008/07/24 11:12
S13	89	S12 and SVD	US-PGPUB; USPAT; EPO; JPO; DERWENT	OR	ON	2008/07/24 11:13
S14	101	SVD and (beamforming same matrix same transmitt$3 same receiv$3)	US-PGPUB; USPAT; EPO; JPO; DERWENT	OR	ON	2008/07/25 09:41
S15	78	S14 and (diagonal with matrix)	US-PGPUB; USPAT; EPO; JPO; DERWENT	OR	ON	2008/07/25 09:42
S16	4	(US-20050286663-$ or US-20020187753-$ or US-20040042558-$ or US-20030139196-$).did.	US-PGPUB	OR	ON	2008/07/25 13:56

ZTE, Exhibit 1002-0031

S17	0	S16 and polar	US-PGPUB; USPAT; EPO; JPO; DERWENT	OR	ON	2008/07/25 13:56
S18	7	polar same cartesian same beamforming same matrix	US-PGPUB; USPAT; EPO; JPO; DERWENT	OR	ON	2008/07/25 13:56
S19	0	polar same scalar same beamforming same matrix	US-PGPUB; USPAT; EPO; JPO; DERWENT	OR	ON	2008/07/25 13:59
S20	193	polar same cartesian same matrix	US-PGPUB; USPAT; EPO; JPO; DERWENT	OR	ON	2008/07/25 13:59
S21	2	"5541607".pn.	US-PGPUB; USPAT; EPO; JPO; DERWENT	OR	ON	2008/07/25 14:01
S22	6966	power same ((beam adj form$3) or beamforming)	US-PGPUB; USPAT; EPO; JPO; DERWENT	OR	ON	2009/06/01 14:15
S23	338	SVD and beamform$3	US-PGPUB; USPAT; EPO; JPO; DERWENT	OR	ON	2009/06/01 14:16
S24	139	S22 and S23	US-PGPUB; USPAT; EPO; JPO; DERWENT	OR	ON	2009/06/01 14:16
S25	3194	power with ((beam adj form$3) or beamforming)	US-PGPUB; USPAT; EPO; JPO; DERWENT	OR	ON	2009/06/01 14:18
S26	97	S25 and S23	US-PGPUB; USPAT; EPO; JPO; DERWENT	OR	ON	2009/06/01 14:18
S27	754	S25 and feedback$3	US-PGPUB; USPAT; EPO; JPO; DERWENT	OR	ON	2009/06/01 14:18
S28	69	S27 and S23	US-PGPUB; USPAT; EPO; JPO; DERWENT	OR	ON	2009/06/01 14:18
S29	233	S25 and (power with feedback$3)	US-PGPUB; USPAT; EPO; JPO; DERWENT	OR	ON	2009/06/01 14:19
S30	24	S29 and S23	US-PGPUB; USPAT; EPO; JPO; DERWENT	OR	ON	2009/06/01 14:19
S34	2	US-20060239374-$.did.	US-PGPUB; USPAT; FPRS; EPO; JPO; DERWENT	OR	ON	2012/12/17 09:40

EAST Search History (Interference)

Ref #	Hits	Search Query	DBs	Default Operator	Plurals	Time Stamp
L1	3776	375/260.ccls.	USPAT; UPAD	OR	ON	2012/12/17 13:20
L2	88	1 and beamform$4.clm.	USPAT; UPAD	OR	ON	2012/12/17 13:21
L3	7	2 and unitary.clm.	USPAT; UPAD	OR	ON	2012/12/17 13:21

ZTE, Exhibit 1002-0032

L4	3	3 and wireless.clm.	USPAT; UPAD	OR	ON	2012/12/17 13:22
L5	1	4 and channel.clm.	USPAT; UPAD	OR	ON	2012/12/17 13:22
L6	1	5 and response.clm.	USPAT; UPAD	OR	ON	2012/12/17 13:22
S31	7	references.clm. and polar.clm. and unitary.clm.	USPAT; UPAD	OR	ON	2009/10/09 08:32
S32	427	375/299.ccls.	USPAT; UPAD	OR	ON	2009/10/09 08:32
S33	0	S31 and S32	USPAT; UPAD	OR	ON	2009/10/09 08:32

12/ 17/ 2012 1:23:22 PM
C:\ Users\ mneff\ Documents\ EAST\ Workspaces\ 11237341.wsp

ZTE, Exhibit 1002-0033

Search Notes	Application/Control No.	Applicant(s)/Patent Under Reexamination
	11237341	ALDANA ET AL.
	Examiner	Art Unit
	MICHAEL R NEFF	2611

SEARCHED			
Class	Subclass	Date	Examiner
375	267	7/24/2008	MRN

SEARCH NOTES		
Search Notes	Date	Examiner
Class / Subclass search performed with keyword limitations	7/24/2008	MRN
Inventor / Double patenting search performed in EAST database	7/24/2008	MRN
prior art evaluated in light of applicants arguments	1/7/2009	MRN
Review of decision by appeal board	12/17/2012	MRN
Review of claims for 112 and 101 issues	12/17/2012	MRN
Reivew of art	12/17/2012	MRN
Review of claims for minor informalities	12/17/2012	MRN

INTERFERENCE SEARCH			
Class	Subclass	Date	Examiner
375	260	12/17/2012	MRN

/MICHAEL R NEFF/ Examiner.Art Unit 2611	

ZTE, Exhibit 1002-0034

Issue Classification	Application/Control No.	Applicant(s)/Patent Under Reexamination
	11237341	ALDANA ET AL.
	Examiner	**Art Unit**
	MICHAEL NEFF	2631

ORIGINAL		INTERNATIONAL CLASSIFICATION									
CLASS	SUBCLASS	CLAIMED					NON-CLAIMED				
375	260	H	0	4	K	1 / 10 (2006.0)					

CROSS REFERENCE(S)					
CLASS	SUBCLASS (ONE SUBCLASS PER BLOCK)				
375	267	350			

☐ Claims renumbered in the same order as presented by applicant ☐ CPA ☐ T.D. ☐ R.1.47

Final	Original	Final	Original	Final	Original	Final	Original	Final	Original	Final	Original	Final	Original	Final	Original
1	1	17	17												
2	2	18	18												
3	3	19	19												
4	4	20	20												
5	5														
6	6														
7	7														
8	8														
9	9														
10	10														
11	11														
12	12														
13	13														
14	14														
15	15														
16	16														

/MICHAEL NEFF/ Examiner.Art Unit 2631	12/17/2012	**Total Claims Allowed:**	
(Assistant Examiner)	(Date)	20	
/SHUWANG LIU/ Supervisory Patent Examiner.Art Unit 2631	12/17/2012	O.G. Print Claim(s)	O.G. Print Figure
(Primary Examiner)	(Date)	1	4

ZTE, Exhibit 1002-0035

Index of Claims	Application/Control No.	Applicant(s)/Patent Under Reexamination
	11237341	ALDANA ET AL.
	Examiner	Art Unit
	MICHAEL R NEFF	2611

✓	Rejected	-	Cancelled	N	Non-Elected	A	Appeal
=	Allowed	÷	Restricted	I	Interference	O	Objected

☐ Claims renumbered in the same order as presented by applicant ☐ CPA ☐ T.D. ☐ R.1.47

CLAIM		DATE								
Final	Original	07/25/2008	01/07/2009	12/17/2012						
1	1	✓	✓	=						
2	2	✓	✓	=						
3	3	✓	✓	=						
4	4	✓	✓	=						
5	5	✓	✓	=						
6	6	✓	✓	=						
7	7	✓	✓	=						
8	8	✓	✓	=						
9	9	✓	✓	=						
10	10	✓	✓	=						
11	11	✓	✓	=						
12	12	✓	✓	=						
13	13	✓	✓	=						
14	14	✓	✓	=						
15	15	✓	✓	=						
16	16	✓	✓	=						
17	17	✓	✓	=						
18	18	✓	✓	=						
19	19	✓	✓	=						
20	20	✓	✓	=						

ZTE, Exhibit 1002-0036

UNITED STATES PATENT AND TRADEMARK OFFICE

UNITED STATES DEPARTMENT OF COMMERCE
United States Patent and Trademark Office
Address: COMMISSIONER FOR PATENTS
P.O. Box 1450
Alexandria, Virginia 22313-1450
www.uspto.gov

APPLICATION NO.	FILING DATE	FIRST NAMED INVENTOR	ATTORNEY DOCKET NO.	CONFIRMATION NO.
11/237,341	09/28/2005	Carlos Aldana	BP4880	6712

51472 7590 12/14/2012

GARLICK & MARKISON
P.O. BOX 160727
AUSTIN, TX 78716-0727

EXAMINER	
NEFF, MICHAEL R	
ART UNIT	**PAPER NUMBER**
2631	

NOTIFICATION DATE	DELIVERY MODE
12/14/2012	ELECTRONIC

Please find below and/or attached an Office communication concerning this application or proceeding.

The time period for reply, if any, is set in the attached communication.

Notice of the Office communication was sent electronically on above-indicated "Notification Date" to the following e-mail address(es):

MMURDOCK@TEXASPATENTS.COM
ghmptocor@texaspatents.com
smcwhinnie@texaspatents.com

ZTE, Exhibit 1002-0037

UNITED STATES PATENT AND TRADEMARK OFFICE

BEFORE THE PATENT TRIAL AND APPEAL BOARD

Ex parte CARLOS ALDANA and JOONSUK KIM

Appeal 2010-006042
Application 11/237,341
Technology Center 2600

Before, KEVIN F. TURNER, JONI Y. CHANG, and
THOMAS L. GIANNETTI, *Administrative Patent Judges*.

CHANG, *Administrative Patent Judge*.

DECISION ON APPEAL

ZTE, Exhibit 1002-0038

Appellants appeal under 35 U.S.C. § 134(a) from a final rejection of claims 1-20. We have jurisdiction under 35 U.S.C. § 6(b). We *reverse*.

STATEMENT OF THE CASE

Appellants' Invention

Appellants' claimed invention relates to beamforming wireless communication systems. (Abs.) Figure 3, reproduced below, is a block diagram showing a wireless communication device in accordance with Appellants' invention:

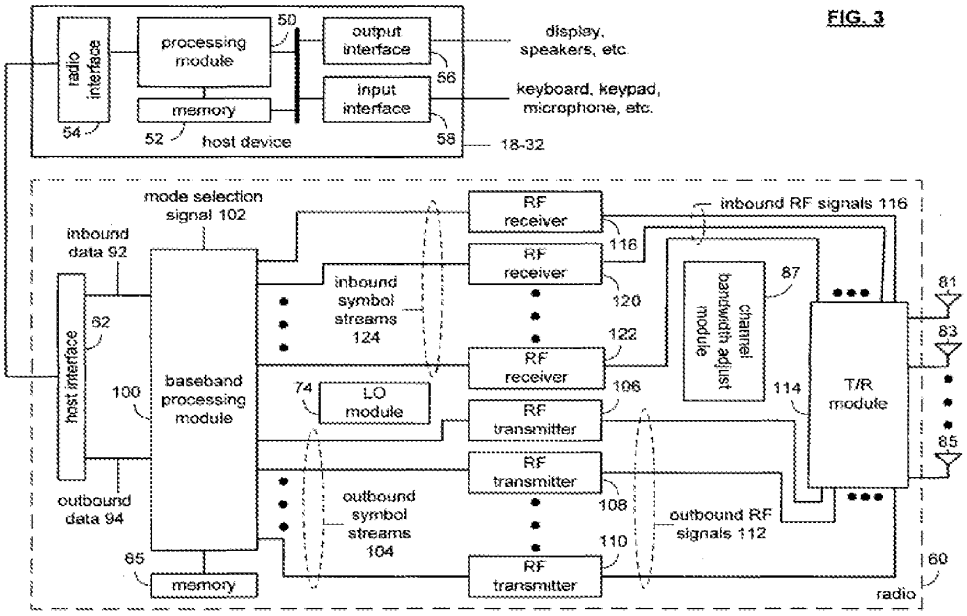

Figure 3 illustrates a wireless communication device.

Appellants' wireless communication device includes the host device 18-32 (*e.g.*, a laptop computer or cellular telephone) and an associated radio 60 that has a baseband processing module 100, memory 65, radio frequency (RF) transmitters 106-110, a transmit/receive (T/R) module 114, and RF receivers 118-120. (Spec. 12:29-13:1.) The baseband processing module

ZTE, Exhibit 1002-0039

100 using the operational instructions stored in memory 65 executes digital receiver functions (*e.g.*, digital intermediate frequency to baseband conversion, demodulation, and constellation demapping) and digital transmitter functions (*e.g.*, encoding, scrambling, and interleaving). (Spec. 13:1-10.) To improve wireless communications, Appellants' baseband processing module 100 includes a transmitter beamforming (V) module 132 and a receiver beamforming module (U) 144. (Spec. 15:21-24; 16:17-19; 19:9-14; Figs. 4-5.)

In general, beamforming is a processing technique to create a focused antenna beam by shifting a signal in time or in phase to provide gain of the signal in a desired direction and to attenuate the signal in other directions. (Spec. 4:20-22.)

Representative Claim

Claim 1, reproduced below, is representative:

> 1. A method for feeding back transmitter beamforming information from a receiving wireless communication device to a transmitting wireless communication device, the method comprising:
>
> the receiving wireless communication device receiving a preamble sequence from the transmitting wireless device;
>
> the receiving wireless device estimating a channel response based upon the preamble sequence;
>
> *the receiving wireless device determining an estimated transmitter beamforming unitary matrix (V) based upon the channel response and a receiver beamforming unitary matrix (U);*
>
> *the receiving wireless device decomposing the estimated transmitter beamforming unitary matrix (V) to produce the transmitter beamforming information*; and

ZTE, Exhibit 1002-0040

the receiving wireless device wirelessly sending *the transmitter beamforming information* to the transmitting wireless device. (Emphasis added.)

Rejections on Appeal

1. Claims 1, 3, 4, 7, 8, 9, 11, 12, 17 and 18 are rejected under 35 U.S.C. § 103(a) as being unpatentable over Kim[1] and Hwang[2];

2. Claims 5, 6, 13, 14, 19 and 20 are rejected under 35 U.S.C. § 103(a) over Kim, Hwang, and Ma[3]; and

3. Claims 2, 10, 15 and 16 are rejected under 35 U.S.C. § 103(a) over Kim, Hwang, and Reinhardt[4]. (App. Br. 8; Reply Br. 2.)[5]

PRINCIPLES OF LAW

During examination of a patent application, claims are given "their broadest reasonable interpretation consistent with the specification" and "in light of the specification as it would be interpreted by one of ordinary skill in the art." *In re Am. Acad. of Sci. Tech. Ctr.*, 367 F.3d 1359, 1364 (Fed. Cir. 2004). "The broadest-construction rubric coupled with the term 'comprising' does not give the PTO an unfettered license to interpret claims to embrace anything remotely related to the claimed invention." *In re Suitco Surface, Inc.,* 603 F.3d 1255, 1260 (Fed. Cir. 2010). And an inventor may choose to be his own lexicographer and to give terms uncommon meanings, but "he must set out his uncommon definition in some manner within the

[1] Kim et al, U.S. Publication No. 2002/0187753, Dec. 12, 2002.
[2] Hwang et al., U.S. Publication No. 2004/0042558, Mar. 4, 2004.
[3] Ma et al., "A unified algebraic transformation approach for parallel recursive and adaptive filtering and SVD algorithms", IEEE Transactions on Signal Processing, Vol. 49, No. 2, Feb. 2001.
[4] Reinhardt, U.S. Patent No. 5,541,607, Jul. 30, 1996.
[5] Appellants' Appeal Brief was filed July 20, 2009, and Reply Brief was filed December 10, 2009.

ZTE, Exhibit 1002-0041

patent disclosure so as to give one of ordinary skill in the art notice of the change." *In re Paulsen*, 30 F.3d 1475, 1480 (Fed. Cir. 1994). When an explicit definition is provided by the applicant for a term, that definition will control interpretation of the term as it is used in the claim. *Toro Co. v. White Consolidated Industries Inc.*, 199 F.3d 1295, 1302 (Fed. Cir. 1999).

A conclusion of obviousness requires an accounting for all of the limitations in a claim. *CFMT, Inc. v. Yieldup Int'l. Corp.*, 349 F.3d 1333, 1342 (Fed. Cir. 2003). There must be a factual basis to support a conclusion of obviousness. *In re Warner*, 379 F.2d 1011, 1017 (CCPA 1967) ("A rejection based on section 103 clearly must rest on a factual basis, and these facts must be interpreted without hindsight reconstruction of the invention from the prior art.") Further, "rejections on obviousness grounds cannot be sustained by mere conclusory statements; instead, there must be some articulated reasoning with some rational underpinning to support the legal conclusion of obviousness." *KSR Int'l Co. v. Teleflex Inc.*, 550 U.S. 398, 418 (2007).

ANALYSIS

Independent claims 1, 9, and 17 recite the following limitations "determining an estimated transmitter beamforming unitary matrix (V) based upon the channel response and a receiver beamforming unitary matrix (U)" and "decomposing the estimated transmitter beamforming unitary matrix (V) to produce the transmitter beamforming information." The Examiner relies upon Kim to describe these disputed limitations. (Ans. 3-4.)

However, Appellants contend that the combination of Kim and Hwang does not teach or suggest those disputed limitations. (App. Br. 12.) In particular, Appellants argue that Kim's disclosure of "determining the

ZTE, Exhibit 1002-0042

transmission power information does not teach or suggest any mechanism for determining 'transmitter beamforming information'" since the term "beamforming" is defined in the specification as referring to "shifting as signal in time or phase" and not in terms of "power." (App. Br. 13.)

We find Appellants' arguments persuasive. As an initial matter, we note that the Examiner's inclusion of newly cited references in the Answer (Ans.13), without designating them as a new ground of rejection, does not provide Appellants with an adequate opportunity to respond. *See In re Kronig*, 539 F.2d 1300, 1302 (CCPA 1976). Further, the rejection statement itself does not include any of the newly cited references, and relies merely upon Kim to describe the disputed limitations (Ans. 3-4). Therefore, our review does not include any consideration of those newly cited references (*e.g.*, whether the claimed subject matter would have been obvious over Kim, Tirkkonen, and Hwang). The principal issue in this appeal is whether Kim describes the disputed limitations as recited in the claims.

As to claim interpretation, we recognize that Appellants' specification defines the term "beamforming" as "a processing technique to create a focused antenna beam by **shifting a signal in time or in phase** to provide gain of the signal in a desired direction and to attenuate the signal in other directions." (Spec. 4:20-22, emphasis added.) Appellants also cite several references in the specification to support this definition. (Spec. 4:2-29.) Furthermore, Appellants' usage of the term "beamforming" is consistent with that definition. Notably, Appellants' specification discloses that "[t]he beamforming module 132 generates the **beamforming unitary matrix** V to satisfy the conditions of… a second row of polar coordinates including **phase shift values**." (Spec. 16:22-31, emphasis added.)

ZTE, Exhibit 1002-0043

Accordingly, we conclude that in light of Appellants' specification, one of ordinary skill in the art would interpret the claim term "beamforming" as referring to "shifting a signal in time or phase" rather than allocating the transmitter power as taught by Kim. (App. Br. 12-13.) Applying this claim construction, we do not find that Kim teaches or suggests a step or mechanism for determining an estimated transmitter beamforming unitary matrix and decomposing the beamforming matrix to produce the transmitter beamforming information.

It is not disputed that Kim does not expressly teach the disputed limitations. (Final rejection 2-3.) The Examiner seems to imply that Kim inherently or implicitly discloses the disputed limitations because the Examiner states that "although the disclosure does not explicitly state 'beamforming', the Examiner interprets the decomposition means as pointed out in paragraph 0009 and further cited areas which provide for the determination of feedback information which directly effects the functionality of the transmitter antenna array properties to fully encompass the claimed limitations as currently stated." (*Id.*) Regarding Kim, the Examiner also states that "accounting for equation 2, the transmit power can be seen to directly affect the beamforming matrices." (Advisory Action.) The Examiner finds that it would have been "obvious to one of ordinary skill in the art that the feedback and application of power information has a direct relationship in appropriate system to the beamforming functionality of the system, and therefore that the power information constitutes 'beamforming information' in the sense that is information utilized by the system or method to ultimately achieve beamforming adjustments." (Ans. 12, emphasis added.)

ZTE, Exhibit 1002-0044

Upon consideration of Kim and the Examiner's findings, we find that the cited portions of Kim refer to a method of determining the transmission **power** to be allocated to the transmitting antennas. (Kim ¶¶ 0007, 0009, 0017, 0019, 0024, 0065.) Further, we agree with Appellants that Kim's equation 2 describes a relationship between matrices used to allocate transmission **power** among different channels. Kim's matrices are **power** matrices, rather than "beamforming" matrices that include time or phase shift values. It could well be that such matrices, those of Kim and of the instant claims, are synonymous in the art of wireless communication systems, but the Examiner has not shown the same in the appealed rejection.

Additionally, a determination of feedback power information is not necessarily a determination of the transmitter "beamforming" information even if the feedback power information affects the functionality of the transmitter antenna array properties. *In re Oelrich*, 666 F.2d 578, 581 (CCPA 1981) (Inherency may not be established by probabilities or possibilities. The mere fact that a certain thing may result from a given set of circumstances is not sufficient.) Kim does not teach or suggest decomposing an estimated transmitter "beamforming" unitary matrix to produce the transmitter "beamforming" information.

Accordingly, the Examiner's determination that Kim discloses the disputed limitations is not supported by a preponderance of the evidence. As such, we cannot sustain the rejections of claims 1-20 based on Kim and Hwang.

CONCLUSION

For the foregoing reasons, we reverse the obviousness rejections of claims 1-20 based on Kim and Hwang.

ZTE, Exhibit 1002-0045

REVERSED

ZTE, Exhibit 1002-0046

UNITED STATES PATENT AND TRADEMARK OFFICE

UNITED STATES DEPARTMENT OF COMMERCE
United States Patent and Trademark Office
Address: COMMISSIONER FOR PATENTS
P.O. Box 1450
Alexandria, Virginia 22313-1450
www.uspto.gov

APPLICATION NO.	FILING DATE	FIRST NAMED INVENTOR	ATTORNEY DOCKET NO.	CONFIRMATION NO.
11/237,341	09/28/2005	Carlos Aldana	BP4880	6712

51472 7590 04/19/2010
GARLICK HARRISON & MARKISON
P.O. BOX 160727
AUSTIN, TX 78716-0727

EXAMINER	
NEFF, MICHAEL R	
ART UNIT	PAPER NUMBER
2611	

NOTIFICATION DATE	DELIVERY MODE
04/19/2010	ELECTRONIC

Please find below and/or attached an Office communication concerning this application or proceeding.

The time period for reply, if any, is set in the attached communication.

Notice of the Office communication was sent electronically on above-indicated "Notification Date" to the following e-mail address(es):

MMURDOCK@TEXASPATENTS.COM
SMCWHINNIE@TEXASPATENTS.COM

ZTE, Exhibit 1002-0047

United States Patent and Trademark Office

Under Secretary of Commerce for Intellectual Property and
Director of the United States Patent and Trademark Office
P.O. Box 1450
Alexandria, Virginia 22313-1450
www.uspto.gov

GARLICK HARRISON & MARKISON
P.O. BOX 160727
AUSTIN, TX 78716-0727

Appeal No: 2010-006042
Application: 11/237,341
Appellant: Carlos Aldana et al.

Board of Patent Appeals and Interferences
Docketing Notice

Application 11/237,341 was received from the Technology Center at the Board on March 29, 2010 and has been assigned Appeal No: 2010-006042.

In all future communications regarding this appeal, please include both the application number and the appeal number.

The mailing address for the Board is:

BOARD OF PATENT APPEALS AND INTERFERENCES
UNITED STATES PATENT AND TRADEMARK OFFICE
P.O. BOX 1450
ALEXANDRIA, VIRGINIA 22313-1450

The facsimile number of the Board is 571-273-0052. Because of the heightened security in the Washington D.C. area, facsimile communications are recommended. Telephone inquiries can be made by calling 571-272-9797 and referencing the appeal number listed above.

By order of the Board of Patent Appeals and Interferences.

UNITED STATES PATENT AND TRADEMARK OFFICE

UNITED STATES DEPARTMENT OF COMMERCE
United States Patent and Trademark Office
Address: COMMISSIONER FOR PATENTS
P.O. Box 1450
Alexandria, Virginia 22313-1450
www.uspto.gov

APPLICATION NO.	FILING DATE	FIRST NAMED INVENTOR	ATTORNEY DOCKET NO.	CONFIRMATION NO.
11/237,341	09/28/2005	Carlos Aldana	BP4880	6712

51472 7590 03/22/2010
GARLICK HARRISON & MARKISON
P.O. BOX 160727
AUSTIN, TX 78716-0727

EXAMINER	
NEFF, MICHAEL R	
ART UNIT	PAPER NUMBER
2611	

NOTIFICATION DATE	DELIVERY MODE
03/22/2010	ELECTRONIC

Please find below and/or attached an Office communication concerning this application or proceeding.

The time period for reply, if any, is set in the attached communication.

Notice of the Office communication was sent electronically on above-indicated "Notification Date" to the following e-mail address(es):

MMURDOCK@TEXASPATENTS.COM
SMCWHINNIE@TEXASPATENTS.COM

ZTE, Exhibit 1002-0049

UNITED STATES DEPARTMENT OF COMMERCE
U.S. Patent and Trademark Office
Address: COMMISSIONER FOR PATENTS
P.O. Box 1450
Alexandria, Virginia 22313-1450

APPLICATION NO./ CONTROL NO.	FILING DATE	FIRST NAMED INVENTOR / PATENT IN REEXAMINATION	ATTORNEY DOCKET NO.
11237341	9/28/2005	ALDANA ET AL.	BP4880

GARLICK HARRISON & MARKISON
P.O. BOX 160727
AUSTIN, TX 78716-0727

EXAMINER
MICHAEL R. NEFF

ART UNIT	PAPER
2611	20100311

DATE MAILED:

Please find below and/or attached an Office communication concerning this application or proceeding.

Commissioner for Patents

The reply brief filed 12/10/2009 has been entered and considered. The application has been forwarded to the Board of Patent Appeals and Interferences for decision on the appeal.

/Shuwang Liu/
Supervisory Patent Examiner, Art Unit 2611

/MICHAEL R. NEFF/
Examiner, Art Unit 2611

PTO-90C (Rev.04-03)

DOCKET NO. BP4880

Customer No. 51,472

IN THE UNITED STATES PATENT AND TRADEMARK OFFICE

In re Application of: Carlos Aldana	**Art Unit:** 2611
Serial No.: 11/237,431	**Conf. No.:** 6712
Filed: September 28, 2005	**Examiner:** Michael R. Neff

Title: Efficient Feedback of Channel Information in a Closed Loop Beamforming Wireless Communication System

Mail Stop Appeal Brief-Patents
Commissioner for Patents
P.O. Box 1450
Alexandria, VA 22313-1450

REPLY BRIEF

This Reply Brief is respectfully submitted in connection with the above-identified application in response to the Examiner's Answer dated November 12, 2009.

.

ZTE, Exhibit 1002-0051

RESPONSE TO EXAMINER'S ANSWER

The grounds of rejection to be reviewed on appeal in this matter include: "(1) Whether Claims 1, 3, 4, 7, 8, 9, 11, 12, 17 and 18 are unpatentable under 35 U.S.C. § 103(a) over Kim et al. (US Patent Application Publication No. 2002/0187753) in view of Hwang et al. (U.S. Patent Application Publication No. 2004/0042558); (2) Whether Claims 5, 6, 13, 14, 19 and 20 are unpatentable under 35 U.S.C. § 103(a) over Kim et al. and Hwang et al. in view of Ma et al. (US Publication "A unified algebraic transformation approach for parallel recursive and adaptive filtering and SVD algorithms", IEEE 2001); and (3) Whether Claims 2, 10, 15 and 16 are unpatentable under 35 U.S.C. § 103(a) over Kim et al. and Hwang et al. in view of Reinhardt (U.S. Patent No. 5,541,607)."

Appellant has argued that the combination of *Kim* and *Hwang* does not teach or suggest the following features recited in independent Claim 1 (and similarly recited in independent Claims 9 and 17): (1) "*the receiving wireless device determining an estimated transmitter beamforming unitary matrix (V) based upon the channel response and a receiver beamforming unitary matrix (U);*" and (2) "*the receiving wireless device decomposing the estimated transmitter beamforming unitary matrix (V) to produce the transmitter beamforming information*."

The Examiner has cited *Kim* as teaching the above-listed features. Appellant traversed the Examiner's position that *Kim* taught the above-cited features in the Appeal Brief filed by Appellant on July 20, 2009.

In particular, on page 13 of the Appeal Brief, Appellant argued: "*Kim* only teaches systems and methods for a receiver to calculate transmit power information (e.g., the transmission power to be allocated by a transmitter to transmitting antennae) and for feeding

ZTE, Exhibit 1002-0052

back the calculated transmit power information to the transmitter. By contrast, the present invention is directed to systems and method for 'feeding back transmitter beamforming information.' Beamforming is defined in the specification on page 4 as referring to 'shifting a signal in time or phase.' This has nothing to do with the transmit power. Thus, a reference (i.e., *Kim* or *Hwang*) that teaches determining transmitter power information does not teach or suggest any mechanism for determining "transmitter beamforming information."

In response, on page 12 of the Examiner's Answer, the Examiner stated: "The Examiner interprets the prior art of record to provide that it would be obvious to one of ordinary skill in the art that the feedback and application of power information has a direct relationship in appropriate system to the beamforming functionality of the system, and therefore that the power information constitutes 'beamforming information' in the sense that is information utilized by the system or method to ultimately achieve beamforming adjustments."

Appellants respectfully disagree with this statement. As Appellant noted in Appellant's Appeal Brief, the term "beamforming" is defined in the specification on page 4 as referring to "shifting a signal in time or phase." Appellant's specification does not define "beamforming" in terms of power, nor does Appellant's specification indicate that the power applied to the system would in any way be related to the beamforming functionality of the system. Instead, Appellant's specification defined "beamforming" only in terms of time/phase shifting. Therefore, the term "beamforming information" when interpreted in light of the specification (as required by the Examiner) does not refer to nor is it derived from any type of power information.

On page 13 of the Examiner's Answer, the Examiner went on to cite several references in support of the Examiner's position that power information has a direct relationship to the beamforming functionality of the system. With respect to one of the cited references, *Tirkkonen*,

ZTE, Exhibit 1002-0053

the Examiner stated: "As a specific example of the disclosures, the Examiner points to Tirkkonen et al. at paragraph 0017 'Beamforming is another technique used in MIMO systems, which can be used at either the transmitter or receiver antennas, for concentrating the energy of certain channels. For example, by applying power weighting factors to each of the transmitting antennas depending on their estimated channel quality, it is possible to optimize the capacity or performance of the system as a whole.'"

Initially, Appellant notes that the Examiner did not cite any of these references during prosecution, and therefore, Appellant has not had an adequate opportunity to respond to this argument. However, again, Appellant's specification does not define the term "beamforming" in terms of "power." Therefore, even though the prior art indicates that the performance of the system can be optimized by applying power weighting factors to each of the transmitting antennas, this has nothing to do with Appellant's claimed invention. Appellant's claimed "beamforming information" is defined as concerning shifts in time/phase, not power. In theory, Appellant's invention could also utilize the teachings of *Tirkkonen* to further optimize Appellant's system, but the teachings of *Tirkkonen*, *Kim* and the other cited references do not provide any mechanism for producing "beamforming information," as defined in Appellant's specification.

It is submitted in view of the foregoing that the combination of *Kim* and *Hwang* does not teach or suggest each of the features of Claims 1, 9 and 17, arranged as they are in the claims. For at least these reasons, Appellant respectfully submits that Claims 1, 9 and 17 (and all claims that depend therefrom) are not obvious over the prior art of record. Accordingly, Appellants respectfully request the withdrawal of the §103(a) rejection and full allowance of Claims 1, 3, 4, 7, 8, 9, 11, 12, 17 and 18.

ZTE, Exhibit 1002-0054

Moreover, the aforementioned Claims 2, 5, 6, 10, 13-16, 19 and 20 recite all of the exemplary features discussed above with respect to the rejection of independent Claims 1, 9 and 17. Therefore, Appellant respectfully submits that the rejections of Claims 5, 6, 13, 14, 19 and 20 are overcome for at least the same reasons given above with respect to the rejections of Claims 1, 9 and 17.

CONCLUSION

The Appellants have demonstrated that the present invention as claimed is clearly distinguishable over the prior art cited of record. Therefore, the Appellants respectfully request the Board of Patent Appeals and Interferences to reverse the final rejection of the Examiner and instruct the Examiner to issue a notice of allowance of all claims.

RESPECTFULLY SUBMITTED,

Date: December 10, 2009

/Holly L. Rudnick/Reg. No. 43,065
Holly L. Rudnick
Attorney for Applicant

Garlick, Harrison & Markison
P.O. Box 160727
Austin, Texas 78716
(Direct) (214) 387-8097
(Fax) (214) 387-7949
(Email hrudnick@texaspatents.com)

ZTE, Exhibit 1002-0055

Electronic Acknowledgement Receipt

EFS ID:	6614688
Application Number:	11237341
International Application Number:	
Confirmation Number:	6712
Title of Invention:	Efficient feedback of channel information in a closed loop beamforming wireless communication system
First Named Inventor/Applicant Name:	Carlos Aldana
Customer Number:	51472
Filer:	Holly L. Rudnick/Sherry Wolf McWhinnie
Filer Authorized By:	Holly L. Rudnick
Attorney Docket Number:	BP4880
Receipt Date:	10-DEC-2009
Filing Date:	28-SEP-2005
Time Stamp:	18:11:36
Application Type:	Utility under 35 USC 111(a)

Payment information:

Submitted with Payment	no

File Listing:

Document Number	Document Description	File Name	File Size(Bytes)/ Message Digest	Multi Part /.zip	Pages (if appl.)
1	Reply Brief Filed	BP4880_Reply_Brief_12102009.pdf	21228 93a2833fc6efe2b3ab668fac743659cd7dbafa15	no	5

Warnings:	
Information:	

Total Files Size (in bytes):	21228

This Acknowledgement Receipt evidences receipt on the noted date by the USPTO of the indicated documents, characterized by the applicant, and including page counts, where applicable. It serves as evidence of receipt similar to a Post Card, as described in MPEP 503.

New Applications Under 35 U.S.C. 111
If a new application is being filed and the application includes the necessary components for a filing date (see 37 CFR 1.53(b)-(d) and MPEP 506), a Filing Receipt (37 CFR 1.54) will be issued in due course and the date shown on this Acknowledgement Receipt will establish the filing date of the application.

National Stage of an International Application under 35 U.S.C. 371
If a timely submission to enter the national stage of an international application is compliant with the conditions of 35 U.S.C. 371 and other applicable requirements a Form PCT/DO/EO/903 indicating acceptance of the application as a national stage submission under 35 U.S.C. 371 will be issued in addition to the Filing Receipt, in due course.

New International Application Filed with the USPTO as a Receiving Office
If a new international application is being filed and the international application includes the necessary components for an international filing date (see PCT Article 11 and MPEP 1810), a Notification of the International Application Number and of the International Filing Date (Form PCT/RO/105) will be issued in due course, subject to prescriptions concerning national security, and the date shown on this Acknowledgement Receipt will establish the international filing date of the application.

UNITED STATES PATENT AND TRADEMARK OFFICE

UNITED STATES DEPARTMENT OF COMMERCE
United States Patent and Trademark Office
Address: COMMISSIONER FOR PATENTS
P.O. Box 1450
Alexandria, Virginia 22313-1450
www.uspto.gov

APPLICATION NO.	FILING DATE	FIRST NAMED INVENTOR	ATTORNEY DOCKET NO.	CONFIRMATION NO.
11/237,341	09/28/2005	Carlos Aldana	BP4880	6712

51472 7590 11/12/2009

GARLICK HARRISON & MARKISON
P.O. BOX 160727
AUSTIN, TX 78716-0727

EXAMINER	
NEFF, MICHAEL R	
ART UNIT	PAPER NUMBER
2611	

NOTIFICATION DATE	DELIVERY MODE
11/12/2009	ELECTRONIC

Please find below and/or attached an Office communication concerning this application or proceeding.

The time period for reply, if any, is set in the attached communication.

Notice of the Office communication was sent electronically on above-indicated "Notification Date" to the following e-mail address(es):

MMURDOCK@TEXASPATENTS.COM
JIVY@TEXASPATENTS.COM
SMCWHINNIE@TEXASPATENTS.COM

ZTE, Exhibit 1002-0058

UNITED STATES PATENT AND TRADEMARK OFFICE

Commissioner for Patents
United States Patent and Trademark Office
P.O. Box 1450
Alexandria, VA 22313-1450
www.uspto.gov

BEFORE THE BOARD OF PATENT APPEALS AND INTERFERENCES

Application Number: 11/237,341
Filing Date: September 28, 2005
Appellant(s): ALDANA ET AL.

Holly L. Rudnick
For Appellant

EXAMINER'S ANSWER

This is in response to the appeal brief filed 7/20/2009 appealing from the Office action mailed 1/23/2009.

(1) Real Party in Interest

A statement identifying by name the real party in interest is contained in the brief.

(2) Related Appeals and Interferences

The examiner is not aware of any related appeals, interferences, or judicial proceedings which will directly affect or be directly affected by or have a bearing on the Board's decision in the pending appeal.

(3) Status of Claims

The statement of the status of claims contained in the brief is correct.

(4) Status of Amendments After Final

The appellant's statement of the status of amendments after final rejection contained in the brief is correct.

(5) Summary of Claimed Subject Matter

The summary of claimed subject matter contained in the brief is correct.

(6) Grounds of Rejection to be Reviewed on Appeal

The appellant's statement of the grounds of rejection to be reviewed on appeal is correct.

(7) Claims Appendix

The copy of the appealed claims contained in the Appendix to the brief is correct.

(8) Evidence Relied Upon

5,541,607	Reinhardt	7-1996

2004/0042558 A1	Hwang et al.	3-2004
2002/0187753 A1	Kim et al.	12-2002

Ma, Jun "A Unified Algebraic Transformation Approach for Parallel Recursive and Adaptive Filtering and SVD Algorithms" IEEE Transactions on Signal Processing, Vol. 49, no. 2 (February 2001), pp 424-437

(9) Grounds of Rejection

The following ground(s) of rejection are applicable to the appealed claims:

Claim Rejections - 35 USC § 103

1. The text of those sections of Title 35, U.S. Code not included in this action can be found in a prior Office action.

2. **Claims 1, 3, 4, 7, 8, 9, 11, 12, 17 and 18 are rejected under 35 U.S.C. 103(a) as being unpatentable over Kim et al. (herein after Kim) (US Publication 2002/0187753 A1) in view of Hwang et al. (herein after Hwang) (US 2004/0042558 A1).**

Re Claims 1 and 17; Kim discloses a method for feeding back transmitter beamforming information from a receiving wireless communication device to a transmitting wireless communication device, the method comprising: the receiving wireless device determining an estimated transmitter beamforming unitary matrix (V) based upon the channel response and a receiver beamforming matrix (U) (Paragraphs 0007, 0009, 0017, 0019, 0065); the receiving wireless device decomposing the estimated transmitter beamforming unitary matrix (V) to produce the transmitter beamforming information (Paragraphs 0009, 0017, 0019 0065); and the receiving wireless device wirelessly sending the transmitter

beamforming information to the transmitting wireless device (Abstract; Figure 4; Paragraph 0009, 0017, 0019, 0024); however Kim does not explicitly disclose wherein (1) the receiving wireless communication device receiving a preamble sequence from the transmitting wireless device; the receiving wireless device estimating a channel response based upon the preamble sequence; or (2) wherein the receiver beamforming matrix (U) is unitary.

However regarding item (1); Kim does disclose the detection and use of the pilot signal to determine channel response values; providing the following disclosures for the limitations of mention: the receiving wireless communication device receiving a preamble sequence from the transmitting wireless device (Abstract; Figure 4; Paragraphs 0017, 0019, 0024); the receiving wireless device estimating a channel response based upon the preamble sequence (Figure 4; Paragraph 0017, 0019).

Therefore it would have been obvious to one of ordinary skill in the art at the time the invention was made that the pilot and preamble signals would provide functionally equivalent results for the processing of the channel response.

Regarding item (2); Hwang discloses a beamforming device wherein the receiver and transmitter beamforming matrices are unitary and derived from a channel response value (Paragraphs 0027-0029).

Therefore it would have been obvious to one of ordinary skill in the art at the time the invention was made that the use of unitary matrices for both the transmitter and receiver beamforming matrices as disclosed by Hwang, while not

explicitly disclosed by Kim; is a common and well known practice for the derivation of beamforming matrices through the decomposition of the channel response values for a given system.

Re Claim 9; Kim discloses a wireless communication device comprising: a plurality of Radio Frequency (RF) components operable to receive an RF signal and to convert the RF signal to a baseband signal (Paragraph 0019); and a baseband processing module operable to: determine an estimated transmitter beamforming unitary matrix (V) based upon the channel response and a receiver beamforming matrix (U) (Paragraphs 0007, 0009, 0017, 0019, 0065); decompose the estimated transmitter beamforming unitary matrix (V) to produce the transmitter beamforming information(Paragraphs 0009, 0017, 0019, 0065); and form a baseband signal employed by the plurality of RF components to wirelessly send the transmitter beamforming information to the transmitting wireless device (0017-0019); however Kim does not explicitly disclose receiving a preamble sequence carried by the baseband signal; estimate a channel response based upon the preamble sequence; or (2) wherein the receiver beamforming matrix (U) is unitary.

However regarding item (1); Kim does disclose the detection and use of the pilot signal to determine channel response values; providing the following disclosures for the limitations of mention: receiving a preamble sequence carried by the baseband signal; (Abstract; Figure 4; Paragraphs 0017, 0019, 0024);

estimate a channel response based upon the preamble sequence (Figure 4; Paragraph 0017, 0019).

Therefore it would have been obvious to one of ordinary skill in the art at the time the invention was made that the pilot and preamble signals would provide functionally equivalent results for the processing of the channel response.

Regarding item (2); Hwang discloses a beamforming device wherein the receiver and transmitter beamforming matrices are unitary and derived from a channel response value (Paragraphs 0027-0029).

Therefore it would have been obvious to one of ordinary skill in the art at the time the invention was made that the use of unitary matrices for both the transmitter and receiver beamforming matrices as disclosed by Hwang, while not explicitly disclosed by Kim; is a common and well known practice for the derivation of beamforming matrices through the decomposition of the channel response values for a given system.

Re Claims 3 and 11; the combined disclosures of Kim and Hwang disclose the method of claims 1 and 9; Hwang further discloses wherein the channel response (H), estimated transmitter beamforming unitary matrix (V), and the receiver beamforming unitary matrix (U) are related by the equation: $H = UDV^*$ where, D is a diagonal matrix (Paragraphs 00247-0029).

Re Claims 4, 12 and 18; the combined disclosures of Kim and Hwang disclose the method of claims 3, 9 and 17; Hwang further discloses wherein the receiving wireless device determining an estimated transmitter beamforming unitary matrix (V) based upon the channel response and a receiver beamforming unitary matrix (U) comprises performing a Singular Value Decomposition (SVD) operation (0027-0029).

Re claim 7; the combined disclosures of Kim and Hwang disclose the method of claim 1; Kim further discloses wherein: the transmitting wireless device transmits on N antennas (48; 72); and the receiving wireless device receives on M antennas (60; 40).

Re claim 8; the combined disclosures of Kim and Hwang disclose the method of claim 1; Kim further discloses wherein at least one of the transmitting wireless device and the receiving wireless device supports Multiple Input Multiple Output (MIMO) operations (Figure 1; 48, 60).

3. **Claims 5, 6, 13, 14, 19 and 20 are rejected under 35 U.S.C. 103(a) as being unpatentable over Kim and Hwang as applied to claims 1, 13 and 19; and further in view of Ma et al. (herein after Ma) (US Publication "A unified algebraic transformation approach for parallel recursive and adaptive filtering and SVD algorithms", IEEE 2001).**

Re Claims 5 and 13; the combined disclosures of Kim and Hwang disclose the method of claims 1 and 9; but fail however to explicitly disclose wherein the

receiving wireless device decomposing the estimated transmitter beamforming unitary matrix (V) to produce the transmitter beamforming information comprises the receiving wireless device decomposing the estimated transmitter beamforming unitary matrix (V) using a QR decomposition technique.

This decomposition technique is however disclosed by Ha. Ha discloses a means of QR matrix decomposition (Abstract; Section V and Section VI).

Therefore it would have been obvious to one of ordinary skill in the art at the time the invention was made the use of a QR decomposition technique as disclosed by Ha in order to gain the added benefit of decomposing the transmitter information to a vector format therefore reducing the total bandwidth used for the feed backing of information as disclosed by Kim for beamforming adjustments in the transmitter.

Re claims 6 and 14; the combined disclosures of Kim, Hwang, and Ha disclose the method of claims 5 and 13; Ha further discloses means of utilizing a QR decomposition comprising a Givens Rotation in a matrix decomposition utilizing an SVD decomposition algorithm (Section V and Section VI). The Examiner interprets this disclosure as fully encompassing the scope of the claimed limitations within the claims as mentioned above, wherein the disclosure describes a functionally equivalent process to that of the current application only suffering deficiencies to design choices made within the current application but still utilizing the basis of the prior arts disclosure towards the decomposition algorithms.

Re Claims 19 and 20; the combined disclosures of Kim and Hwang disclose the method of claim 17; but fail however to explicitly disclose wherein utilizing a QR decomposition comprising a Givens Rotation and the equation as claimed in the current application; and wherein the transmitter beamforming information comprises element values of the diagonal matrix D and element values of the Givens Rotation matrix as recited in claim 20.

However; Ha discloses means of utilizing a QR decomposition comprising a Givens Rotation in a matrix decomposition utilizing an SVD decomposition algorithm (Abstract; Section II, Section V and Section VI). The Examiner interprets this disclosure as fully encompassing the scope of the claimed limitations within the claims as mentioned above, wherein the disclosure describes a functionally equivalent process to that of the current application only suffering deficiencies to design choices made within the current application but still utilizing the basis of the prior arts disclosure towards the decomposition algorithms.

Therefore it would have been obvious to one of ordinary skill in the art at the time the invention was made the use of a QR decomposition technique as disclosed by Ha in order to gain the added benefit of decomposing the transmitter information to a vector format therefore reducing the total bandwidth used for the feed backing of information as disclosed by Kim for beamforming adjustments in the transmitter.

4. **Claims 2, 10, 15 and 16 are rejected under 35 U.S.C. 103(a) as being unpatentable over Kim and Hwang et as applied to claims 1 and 9; and further in view of Reinhardt (US Patent 5,541,607).**

Re Claims 2 and 10; the combined disclosures of Kim and Hwang disclose the method of claims 1 and 9; but fail however to explicitly disclose wherein the receiving wireless device determining an estimated transmitter beamforming unitary matrix (V) based upon the channel response and a receiver beamforming unitary matrix (U) comprises: the receiving wireless device producing the estimated transmitter beamforming unitary matrix (V) in Cartesian coordinates; and the receiving wireless device converting the estimated transmitter beamforming unitary matrix (V) to polar coordinates.

This method is however disclosed by Reinhardt. Reinhardt discloses a method of converting parameters from Cartesian to polar coordinates which are further utilized for transmitter beamforming (Figures 3 and 6; 78, 98; Col. 3 line 65-Col. 4 line 5; Col. 6 line 66- Col. 7 line 7).

Therefore it would have been obvious to one of ordinary skill in the art at the time the invention was made to incorporate the use of polar coordinates in the beamforming process as disclosed by Reinhardt within the beamforming system of Poon in order to gain the benefit increasing the system efficiency for a plurality of beams by replacing the power and bandwidth consuming rectangular coordinates.

Re claim 15; the combined disclosures of Kim, Hwang and Reinhardt disclose the method of claim 10; Kim further discloses wherein: the transmitting wireless device transmits on N antennas (48; 72); and the receiving wireless device receives on M antennas (60; 40).

Re claim 16; the combined disclosures of Kim, Hwang and Reinhardt disclose the method of claim 10; Kim further discloses wherein at least one of the transmitting wireless device and the receiving wireless device supports Multiple Input Multiple Output (MIMO) operations (Figure 1; 48, 60).

(10) Response to Argument

A. With respect to claims 1, 9 and 17

The applicant argues that Kim et al. “does not disclose systems and method for "feeding back transmitter beamforming information." Beamforming is defined in the specification on page 4 as referring to "shifting a signal in time or phase." This has nothing to do with the transmit power. Thus, a reference (i.e., Kim or Hwang) that teaches determining transmitter power information does not teach or suggest any mechanism for determining "transmitter beamforming information."”

Response - The Examiner has carefully read and considered the applicant’s argument's regarding the application of Kim et al. to claims 1, 9 and 17 (all independent claims). However the Examiner believes that the current

interpretation and application of the Kim et al. reference is proper. The Examiner interprets the prior art of record to provide that it would be obvious to one of ordinary skill in the art that the feedback and application of power information has a direct relationship in appropriate system to the beamforming functionality of the system, and therefore that the power information constitutes 'beamforming information' in the sense that is information utilized by the system or method to ultimately achieve beamforming adjustments.

The Examiner has directed the applicant to several aspects of the Kim et al. disclosure, inclusive of Paragraphs 0009, 0017 and equation 2 as pointed out in the Advisory action filed 4/2/2009; as well as the other cited paragraphs as pointed out through the Final Office Action filed 1/23/2009.

Equation (2) is as follows:

$UDV^{h}H'=UDVh$

The Examiner has interpreted the prior art to show that as the power information is received and processed, to maintain the equivalency property of the equation that further adjustments would be made to the variable aspects of the system taken account for in the equation (the beamforming properties). The Examiner has taken this interpretation and standpoint based on the disclosure of other references, which is believed to show the correlation to the interpretation and the understanding of one of ordinary skill in the art. As an example of arts which the examiner believes to uphold this relationship the following are provided:

Hottinen et al. US 2004/0018818 A1

Paragraphs 0015, 0027, 0050-0052

Tirkkonen et al. US 2004/0171359 A1

Paragraphs 0010, 0017-0018

Kim et al. US 2006/0098754 A1

Abstract, Paragraphs 0006, 0009, 0014-0017, 0022

Kotecha et al. US 2008/0080634 A1

Abstract, Paragraph 0007 and 0017

Per the disclosure of these references, the examiner believes that the argued relationship is shown to be well known, and thus the grounds of rejection maintained.

As a specific example of the disclosures, the Examiner points to Tirkkonen et al. at paragraph 0017 “Beamforming is another technique used in MIMO systems, which can be used at either the transmitter or receiver antennas, for concentrating the energy of certain channels. For example, by applying power weighting factors to each of the transmitting antennas depending on their estimated channel quality, it is possible to optimize the capacity or performance of the system as a whole.”

The Examiner believes that through the above cited references the interpreted relationship is upheld as being obvious to one of ordinary skill in the art for the provided system structure and that the application of the prior art as cited is proper.

Regarding - Prima Facie case of obviousness for combination.

Response - The applicant has only argued the grounds of establishing a prima facie case of obviousness through the alleged improper limitation rejection, not the art combinations. As the limitation rejection is addressed above all further arguments are believed to be rendered moot/answered.

(11) Related Proceeding(s) Appendix

No decision rendered by a court or the Board is identified by the examiner in the Related Appeals and Interferences section of this examiner's answer.

For the above reasons, it is believed that the rejections should be sustained.

Respectfully submitted,

/MICHAEL R. NEFF/

Examiner, Art Unit 2611

Conferees:

/Shuwang Liu/

Supervisory Patent Examiner, Art Unit 2611

/CHIEH M FAN/

Supervisory Patent Examiner, Art Unit 2611

DOCKET NO. BP4880

Customer No. 51,472

IN THE UNITED STATES PATENT AND TRADEMARK OFFICE

In re Application of:	Carlos Aldana
Serial No.	11/237,431
Filed:	September 28, 2005
For:	Efficient Feedback of Channel Information in a Closed Loop Beamforming Wireless Communication System
Art Unit No.:	2611
Examiner:	Michael R. Neff

Mail Stop Appeal Brief-Patents
Commissioner for Patents
P.O. Box 1450
Alexandria, VA 22313-1450

RESPONSE TO NON-COMPLIANT APPEAL BRIEF

The Appellants have appealed to the Board of Patent Appeals and Interferences from the decision of the Examiner dated January 23, 2009, finally rejecting Claims 1-20. The Appellants filed a Notice of Appeal and Pre-Appeal Brief Request for Review on April 23, 2009. A Notice of Panel Decision from Pre-Appeal Brief Review was mailed on June 19, 2009. As such, the time period for filing an Appeal Brief was reset to expire on July 19, 2009. As July 19, 2009 was a Sunday, the time period for filing the Appeal Brief was extended until July 20, 2009. An Appeal Brief was previously filed on July 20, 2009. After filing, a notice of Non-Compliant Appeal Brief was received having a date mailed of August 25, 2009, thus resetting the time period for filing a compliant Appeal Brief to September 25, 2009. The Appellants respectfully

ZTE, Exhibit 1002-0073

submit only the section, Status of Claims, which was found to be defective. The statutory fee of $540.00 was previously paid on July 20, 2009.

The Appellants respectfully request the Board of Patent Appeals and Interferences to reverse the final rejection of the Examiner and instruct the Examiner to issue a notice of allowance of all claims.

Respectfully submitted,

Date: August 26, 2009

/Holly L. Rudnick/Reg. No. 43,065
Holly L. Rudnick
Attorney for Applicant

Garlick, Harrison & Markison
P.O. Box 160727
Austin, Texas 78716
(Direct) (214) 387-8097
(Fax) (214) 387-7949
(Email hrudnick@texaspatents.com)

ZTE, Exhibit 1002-0074

STATUS OF CLAIMS

Claims 1-20 are pending in the above-identified patent application. Claims 1-20 have been rejected, and are presented for appeal herein. Claims 1-20 are shown in the attached Claims Appendix.

ZTE, Exhibit 1002-0075

Electronic Acknowledgement Receipt

EFS ID:	5961386
Application Number:	11237341
International Application Number:	
Confirmation Number:	6712
Title of Invention:	Efficient feedback of channel information in a closed loop beamforming wireless communication system
First Named Inventor/Applicant Name:	Carlos Aldana
Customer Number:	51472
Filer:	Holly L. Rudnick/Sherry Wolf McWhinnie
Filer Authorized By:	Holly L. Rudnick
Attorney Docket Number:	BP4880
Receipt Date:	26-AUG-2009
Filing Date:	28-SEP-2005
Time Stamp:	20:49:25
Application Type:	Utility under 35 USC 111(a)

Payment information:

Submitted with Payment	no

File Listing:

Document Number	Document Description	File Name	File Size(Bytes)/ Message Digest	Multi Part /.zip	Pages (if appl.)
1	Supplemental Appeal Brief	BP4880_Response_to_NonCompliant_AB_08262009.pdf	10893 f05a5f9b5185d49269f0763e4a8f75cf0a713151	no	3

Warnings:	
Information:	

ZTE, Exhibit 1002-0076

Total Files Size (in bytes):	10893

This Acknowledgement Receipt evidences receipt on the noted date by the USPTO of the indicated documents, characterized by the applicant, and including page counts, where applicable. It serves as evidence of receipt similar to a Post Card, as described in MPEP 503.

New Applications Under 35 U.S.C. 111
If a new application is being filed and the application includes the necessary components for a filing date (see 37 CFR 1.53(b)-(d) and MPEP 506), a Filing Receipt (37 CFR 1.54) will be issued in due course and the date shown on this Acknowledgement Receipt will establish the filing date of the application.

National Stage of an International Application under 35 U.S.C. 371
If a timely submission to enter the national stage of an international application is compliant with the conditions of 35 U.S.C. 371 and other applicable requirements a Form PCT/DO/EO/903 indicating acceptance of the application as a national stage submission under 35 U.S.C. 371 will be issued in addition to the Filing Receipt, in due course.

New International Application Filed with the USPTO as a Receiving Office
If a new international application is being filed and the international application includes the necessary components for an international filing date (see PCT Article 11 and MPEP 1810), a Notification of the International Application Number and of the International Filing Date (Form PCT/RO/105) will be issued in due course, subject to prescriptions concerning national security, and the date shown on this Acknowledgement Receipt will establish the international filing date of the application.

UNITED STATES PATENT AND TRADEMARK OFFICE

UNITED STATES DEPARTMENT OF COMMERCE
United States Patent and Trademark Office
Address: COMMISSIONER FOR PATENTS
P.O. Box 1450
Alexandria, Virginia 22313-1450
www.uspto.gov

APPLICATION NO.	FILING DATE	FIRST NAMED INVENTOR	ATTORNEY DOCKET NO.	CONFIRMATION NO.
11/237,341	09/28/2005	Carlos Aldana	BP4880	6712

51472 7590 08/25/2009

GARLICK HARRISON & MARKISON
P.O. BOX 160727
AUSTIN, TX 78716-0727

EXAMINER	
ART UNIT	PAPER NUMBER

DATE MAILED: 08/25/2009

Please find below and/or attached an Office communication concerning this application or proceeding.

ZTE, Exhibit 1002-0078

Notification of Non-Compliant Appeal Brief (37 CFR 41.37)	Application No.	Applicant(s)	
	11/237,341	ALDANA ET AL.	
	Examiner	Art Unit	
	NEFF	2611	

--The MAILING DATE of this communication appears on the cover sheet with the correspondence address--

The Appeal Brief filed on *01 September 0720* is defective for failure to comply with one or more provisions of 37 CFR 41.37.

To avoid dismissal of the appeal, applicant must file anamended brief or other appropriate correction (see MPEP 1205.03) within **ONE MONTH or THIRTY DAYS** from the mailing date of this Notification, whichever is longer. **EXTENSIONS OF THIS TIME PERIOD MAY BE GRANTED UNDER 37 CFR 1.136.**

1. ☐ The brief does not contain the items required under 37 CFR 41.37(c), or the items are not under the proper heading or in the proper order.

2. ☒ The brief does not contain a statement of the status of all claims, (e.g., rejected, allowed, withdrawn, objected to, canceled), or does not identify the appealed claims (37 CFR 41.37(c)(1)(iii)).

3. ☐ At least one amendment has been filed subsequent to the final rejection, and the brief does not contain a statement of the status of each such amendment (37 CFR 41.37(c)(1)(iv)).

4. ☐ (a) The brief does not contain a concise explanation of the subject matter defined in each of the independent claims involved in the appeal, referring to the specification by page and line number and to the drawings, if any, by reference characters; and/or (b) the brief fails to: (1) identify, for each independent claim involved in the appeal and for each dependent claim argued separately, every means plus function and step plus function under 35 U.S.C. 112, sixth paragraph, and/or (2) set forth the structure, material, or acts described in the specification as corresponding to each claimed function with reference to the specification by page and line number, and to the drawings, if any, by reference characters (37 CFR 41.37(c)(1)(v)).

5. ☐ The brief does not contain a concise statement of each ground of rejection presented for review (37 CFR 41.37(c)(1)(vi))

6. ☐ The brief does not present an argument under a separate heading for each ground of rejection on appeal (37 CFR 41.37(c)(1)(vii)).

7. ☐ The brief does not contain a correct copy of the appealed claims as an appendix thereto (37 CFR 41.37(c)(1)(viii)).

8. ☐ The brief does not contain copies of the evidence submitted under 37 CFR 1.130, 1.131, or 1.132 or of any other evidence entered by the examiner **and relied upon by appellant in the appeal**, along with a statement setting forth where in the record that evidence was entered by the examiner, as an appendix thereto (37 CFR 41.37(c)(1)(ix)).

9. ☐ The brief does not contain copies of the decisions rendered by a court or the Board in the proceeding identified in the Related Appeals and Interferences section of the brief as an appendix thereto (37 CFR 41.37(c)(1)(x)).

10. ☐ Other (including any explanation in support of the above items):

(2) The brief list claims 1-20 as being both cancelled and on appeal. Please clarify.

REGINALD TYSON
PATENT APPEALS SPECIALIST
571-272-1634

ZTE, Exhibit 1002-0079

DOCKET NO. BP4880

Customer No. 51,472

IN THE UNITED STATES PATENT AND TRADEMARK OFFICE

In re Application of:	Carlos Aldana
Serial No.	11/237,341
Filed:	September 28, 2005
For:	Efficient Feedback of Channel Information in a Closed Loop Beamforming Wireless Communication System
Art Unit No.:	2611
Examiner:	Michael R. Neff

Mail Stop Appeal Brief-Patents
Commissioner for Patents
P.O. Box 1450
Alexandria, VA 22313-1450

APPEAL BRIEF

The Appellants have appealed to the Board of Patent Appeals and Interferences from the decision of the Examiner dated January 23, 2009, finally rejecting Claims 1-20. The Appellants filed a Notice of Appeal and Pre-Appeal Brief Request for Review on April 23, 2009. A Notice of Panel Decision from Pre-Appeal Brief Review was mailed on June 19, 2009. As such, the time period for filing an Appeal Brief was reset to expire on July 19, 2009. As July 19, 2009 was a Sunday, the time period for filing the Appeal Brief was extended until July 20, 2009. The Appellants respectfully submit this brief on appeal with the statutory fee of $540.00.

ZTE, Exhibit 1002-0080

REAL PARTY IN INTEREST

This application is currently owned by Broadcom Corporation, a California corporation having its principal place of business in Irvine, California.

ZTE, Exhibit 1002-0081

RELATED APPEALS AND INTERFERENCES

There are no known appeals or interferences that will directly affect or be directly affected by or have a bearing on the Board's decision in this pending appeal.

ZTE, Exhibit 1002-0082

STATUS OF CLAIMS

Claims 1-20 are pending in the above-identified patent application. Claims 1-20 have been cancelled. Claims 1-20 have been rejected, and are presented for appeal herein. Claims 1-20 are shown in the attached Claims Appendix.

ZTE, Exhibit 1002-0083

STATUS OF AMENDMENTS

A Final Office Action was mailed on January 23, 2009. A Request for Reconsideration, which did not amend any of the clams, was mailed by Appellant on March 18, 2009. An Advisory Action was mailed on April 2, 2009. In the Advisory Action, the Examiner stated that the request for reconsideration was considered but did not place the application in condition for allowance because Appellant's arguments were not found to be persuasive.

ZTE, Exhibit 1002-0084

SUMMARY OF INVENTION

According to one embodiment, as claimed in Claim 1, a method, as shown in Figure 7, for feeding back transmitter beamforming information from a receiving wireless communication device to a transmitting wireless communication device is provided. *Application, page 21, lines 16-25.* The method includes the receiving wireless communication device receiving a preamble sequence from the transmitting wireless device, estimating a channel response based upon the preamble sequence and determining an estimated transmitter beamforming unitary matrix (V) based upon the channel response and a receiver beamforming unitary matrix (U). *Application, page 21, line 26 – page 22, line 4.* The method further includes the receiving wireless communication device decomposing the estimated transmitter beamforming unitary matrix (V) to produce the transmitter beamforming information and wirelessly sending the transmitter beamforming information to the transmitting wireless device. *Application, page 22, lines 4-28.*

According to another embodiment, as claimed in Claim 9, a wireless communication device, as shown in Figures 3, 5 and 6, is provided. The wireless communication device includes a plurality of Radio Frequency (RF) components operable to receive an RF signal and to convert the RF signal to a baseband signal and a baseband processing module 100-RX. *Application, page 14, line 29 – page 15, line 6; and page 19, lines 9-14.* The baseband processing module is operable, as shown in Figure 7, to receive a preamble sequence carried by the baseband signal, estimate a channel response based upon the preamble sequence, determine an estimated transmitter beamforming unitary matrix (V) based upon the channel response and a receiver beamforming unitary matrix (U). *Application, page 21, line 16 – page 22, line 4.* The baseband processing module is further operable to decompose the estimated transmitter beamforming unitary matrix (V) to produce the transmitter beamforming information and form a baseband signal employed by the plurality of RF

ZTE, Exhibit 1002-0085

components to wirelessly send the transmitter beamforming information to the transmitting wireless device. *Application, page 22, lines 4-28.*

According to yet another embodiment, as claimed in Claim 17, a method, as shown in Figure 8, is provided for feeding back transmitter beamforming information from a receiving wireless communication device to a transmitting wireless communication device. *Application, page 22, line 30 – page 23, line 3.* The method includes the receiving wireless communication device receiving a preamble sequence from the transmitting wireless device and estimating a channel response based upon the preamble sequence. *Application, page 23, lines 5-8.* The method further includes the receiving wireless device decomposing the channel response based upon the channel response and a receiver beamforming unitary matrix (U) to produce an estimated transmitter beamforming unitary matrix (V), decomposing the estimated transmitter beamforming unitary matrix (V) to produce the transmitter beamforming information and wirelessly sending the transmitter beamforming information to the transmitting wireless device. *Application, page 23, lines 10-23.*

ZTE, Exhibit 1002-0086

GROUNDS OF REJECTION TO BE REVIEWED ON APPEAL

(1) Whether Claims 1, 3, 4, 7, 8, 9, 11, 12, 17 and 18 are unpatentable under 35 U.S.C. § 103(a) over Kim et al. (US Patent Application Publication No. 2002/0187753) in view of Hwang et al. (U.S. Patent Application Publication No. 2004/0042558);

(2) Whether Claims 5, 6, 13, 14, 19 and 20 are unpatentable under 35 U.S.C. § 103(a) over Kim et al. and Hwang et al. in view of Ma et al. (US Publication "A unified algebraic transformation approach for parallel recursive and adaptive filtering and SVD algorithms", IEEE 2001); and

(3) Whether Claims 2, 10, 15 and 16 are unpatentable under 35 U.S.C. § 103(a) over Kim et al. and Hwang et al. in view of Reinhardt (U.S. Patent No. 5,541,607).

ZTE, Exhibit 1002-0087

ARGUMENT

I. OVERVIEW

Claims 1, 3, 4, 7, 8, 9, 11, 12, 17 and 18 were rejected under 35 U.S.C. § 103(a) as being unpatentable over Kim et al. (US Patent Application Publication No. 2002/0187753), hereinafter *Kim*, in view of Hwang et al. (U.S. Patent Application Publication No. 2004/0042558), hereinafter *Hwang*. In addition, Claims 5, 6, 13, 14, 19 and 20 were rejected under 35 U.S.C. § 103(a) as being unpatentable over *Kim* and *Hwang* in view of Ma et al. (US Publication "A unified algebraic transformation approach for parallel recursive and adaptive filtering and SVD algorithms", IEEE 2001), hereinafter *Ma*. Furthermore, Claims 2, 10, 15 and 16 were rejected under 35 U.S.C. § 103(a) as being unpatentable over *Kim* and *Hwang* in view of Reinhardt (U.S. Patent No. 5,541,607), hereinafter *Reinhardt*.

II. REJECTION OF CLAIMS UNDER 35 U.S.C. 103(a)

A. STANDARD

In *ex parte* examination of patent applications, the Patent Office bears the burden of establishing a *prima facie* case of obviousness. MPEP § 2142; *In re Fritch*, 972 F.2d 1260, 1262, 23 U.S.P.Q.2d 1780, 1783 (Fed. Cir. 1992). The initial burden of establishing a *prima facie* basis to deny patentability to a claimed invention is always upon the Patent Office. MPEP § 2142; *In re Oetiker*, 977 F.2d 1443, 1445, 24 U.S.P.Q.2d 1443, 1444 (Fed. Cir. 1992); *In re Piasecki*, 745 F.2d 1468, 1472, 223 U.S.P.Q. 785, 788 (Fed. Cir. 1984). Only when a *prima facie* case of obviousness is established does the burden shift to the applicant to produce evidence of nonobviousness. MPEP § 2142; *In re Oetiker*, 977 F.2d 1443, 1445, 24 U.S.P.Q.2d 1443, 1444 (Fed. Cir. 1992); *In re Rijckaert*, 9 F.3d 1531, 1532, 28 U.S.P.Q.2d 1955, 1956 (Fed. Cir. 1993). If the Patent Office does not produce a *prima facie* case of unpatentability, then without more the applicant is entitled to grant of a patent. *In re Oetiker*,

ZTE, Exhibit 1002-0088

977 F.2d 1443, 1445, 24 U.S.P.Q.2d 1443, 1444 (Fed. Cir. 1992); *In re Grabiak*, 769 F.2d 729, 733, 226 U.S.P.Q. 870, 873 (Fed. Cir. 1985).

A *prima facie* case of obviousness is established when the teachings of the prior art itself suggest the claimed subject matter to a person of ordinary skill in the art. *In re Bell*, 991 F.2d 781, 783, 26 U.S.P.Q.2d 1529, 1531 (Fed. Cir. 1993). To establish a *prima facie* case of obviousness, three basic criteria must be met. First, there must be some suggestion or motivation, either in the references themselves or in the knowledge generally available to one of ordinary skill in the art, to modify the reference or to combine reference teachings. Second, there must be a reasonable expectation of success. Finally, the prior art reference (or references when combined) must teach or suggest all the claim limitations. The teaching or suggestion to make the claimed invention and the reasonable expectation of success must both be found in the prior art, and not based on applicant's disclosure. MPEP § 2142.

B. THE *KIM* REFERENCE

Kim recites a radio communication apparatus that includes a transmitter having a plurality of transmitting antennae, in which each of the transmitting antennae uses a transmission power that is allocated according to a feedback signal from a receiver. The feedback signal is derived in a receiver using an algorithm that analyzes and processes a previously received signal from the plurality of transmitting antennae. Only information on the amount of transmission power to be allocated to a first transmitting antenna from the plurality of transmitting antennae is fed back. *See, Abstract.*

In *Kim*, two conventional power allocation mechanisms are discussed: the equal power allocation method and the water-filling method. *See, paragraph [0005].* In the equal power allocation method, transmission power is allocated equally to base-band signals of transmitting antennae. *See, paragraph [00006].* In the water-filling method, channel

ZTE, Exhibit 1002-0089

response information is estimated by a receiver and fed back from the receiver to the transmitter, and the transmitter allocates transmission power to antennae using the limited total power as the determinant for maximizing the channel capacity. For example, as described in paragraph [0009] of *Kim*:

> "In this method, a conventional radio communication apparatus having multi-input and multi-output is converted into a radio communication apparatus having several parallel elements, with each having single inputs and single outputs, by decoupling conversion for completely canceling interference between signals. In such a decoupling conversion, a V matrix in the transmitter and a Uh matrix in the receiver are used to diagonalize the channel response matrix H' through single value decomposition, using the following equation:
>
> *UDv"H'=UDVh (2)"*

C. THE *HWANG* REFERENCE

Hwang recites a method for transmitting and receiving signals using multi-antennas are disclosed. A transmitter includes: a V generator which generates a beamforming matrix V for a predetermined channel and a water filling unit that allocates transmit power among the antennas. The water filling unit does not perform water filling for a training signal that is pre-known by a receiving apparatuses, but does performs water filling for a user signal to be transmitted. The transmitter further includes a control value detector, which extracts control values from signals received from the receiving apparatuses through the multi-antennas, and outputs a maximum value among the extracted values to the water filling unit. *See, Abstract.*

D. CLAIMS 1, 3, 4, 7, 8, 9, 11, 12, 17 and 18, as rejected using *KIM* and *HWANG*

The Examiner has not shown that the combination of *Kim* and *Hwang* teaches all of the elements of Claims 1, 3, 4, 7, 8, 9, 11, 12, 17 and 18. Specifically, Appellants respectfully submit that the combination of *Kim* and *Hwang* does not teach or suggest at least

ZTE, Exhibit 1002-0090

the following features recited in independent Claim 1 (and similarly recited in independent Claims 9 and 17): (1) "*the receiving wireless device determining an estimated transmitter beamforming unitary matrix (V) based upon the channel response and a receiver beamforming unitary matrix (U)*;" and (2) "*the receiving wireless device decomposing the estimated transmitter beamforming unitary matrix (V) to produce the transmitter beamforming information*."

In the Final Office Action, the Examiner indicated that *Kim* disclosed the above-referenced features and further stated that "although the disclosure [of Kim] does not explicitly state 'beamforming', the Examiner interprets the decomposition means as pointed out in paragraph 0009 and further cited areas which provide for the determination of feedback information which directly effects the functionality of the transmitter antenna array properties to fully encompass the claimed limitations as currently stated."

However, as Appellant argued in response to the Final Office Action, Appellant does not agree with the Examiner's interpretation of *Kim*. The decomposition described in paragraph [0009] of *Kim* and all other cited passages of *Kim* merely refer to a method of determining the "**transmission power**" to be allocated to each of the transmit antennas. *See, Kim et al., paragraphs [0008], [0009]-[0013], [0017], [0019], [0020], [0023] and [0065].*

For example, paragraph [0019] of *Kim* states that the receiver includes "an allocation power calculator for calculating the transmission power to be allocated to each of the base-band signals of the plurality of first transmitting antennae using the estimated channel response" (emphasis added). The allocation power calculator is further explained in paragraph [0020] of *Kim*.: "The allocation power calculator preferably determines powers p_1, p_2, ... , p_{nT}; which maximize channel capacity C_{prop} as the transmission power to be allocated to the base-band signals of the plurality of first transmitting antennae" (emphasis added).

ZTE, Exhibit 1002-0091

As another example, paragraph [0023] of *Kim* describes the method as "a radio communication method performed by such a radio communication apparatus having maximized channel capacity, including: allocating transmission power of each of a plurality of base-band signals of a plurality of first transmitting antennae, which contain an information signal given from outside, using feedback information recovered from a feedback signal, modulating the plurality of base-band signals with the allocated transmission power, converting the modulated base-band signals into RF signals, and transmitting the RF signals; and estimating the channel response experienced during the transmission of the RF signals, recovering the information signal from the RF signals using the estimated channel response, and transmitting the feedback signal containing information regarding the transmission power to be allocated, calculated using the estimated channel response, to the transmitter by radio" (emphasis added).

As can be seen from the above cited passages, *Kim* only teaches systems and methods for a receiver to calculate transmit power information (e.g., the transmission power to be allocated by a transmitter to transmitting antennae) and for feeding back the calculated transmit power information to the transmitter. By contrast, the present invention is directed to systems and method for "feeding back transmitter beamforming information." Beamforming is defined in the specification on page 4 as referring to "shifting a signal in time or phase." This has nothing to do with the transmit power. Thus, a reference (i.e., *Kim* or *Hwang*) that teaches determining transmitter power information does not teach or suggest any mechanism for determining "transmitter beamforming information."

In the Advisory Action mailed on April 2, 2009, the Examiner stated that "accounting for equation 2 [in Kim et al.], the transmit power can be seen to directly effect the beamforming matrices." However, equation 2 in Kim et al. merely describes a relationship between matrices used to allocate transmit power among different channels. The matrices in

ZTE, Exhibit 1002-0092

equation 2 are power matrices, not beamforming matrices. Thus, equation 2 does not imply any direct relationship between the transmit power and beamforming.

It is submitted in view of the foregoing that the combination of *Kim* and *Hwang* does not teach or suggest each of the features of Claims 1, 9 and 17, arranged as they are in the claims. For at least these reasons, Appellant respectfully submits that Claims 1, 9 and 17 (and all claims that depend therefrom) are not obvious over the prior art of record. Accordingly, Appellants respectfully request the withdrawal of the §103(a) rejection and full allowance of Claims 1, 3, 4, 7, 8, 9, 11, 12, 17 and 18.

E. CLAIMS 5, 6, 13, 14, 19 and 20 as rejected using *KIM, HWANG* and *MA*

The Examiner has not shown that the combination of *Kim*, *Hwang* and *Ma* teaches or suggests all of the elements of Claims 5, 6, 13, 14, 19 and 20 and therefore has failed to establish a *prima facie* case of obviousness with respect to Claims 5, 6, 13, 14, 19 and 20.

The aforementioned Claims 5, 6, 13, 14, 19 and 20 recite all of the exemplary features discussed above with respect to the rejection of independent Claims 1, 9 and 17. Therefore, the rejections of Claims 5, 6, 13, 14, 19 and 20 are overcome for at least the same reasons given above with respect to the rejections of Claims 1, 9 and 17.

Therefore, Appellant respectfully submits the Examiner has not made a *prima facie* case that the combination of *Kim*, *Hwang* and *Ma* teaches or suggests Appellants' invention, as recited in Claims 5, 6, 13, 14, 19 and 20. Accordingly, Appellants respectfully request the withdrawal of the § 103 rejection and full allowance of Claims 5, 6, 13, 14, 19 and 20.

ZTE, Exhibit 1002-0093

F. CLAIMS 2, 10, 15 and 16 as rejected using *KIM, HWANG* and *REINHARDT*

The Examiner has not shown that the combination of *Kim*, *Hwang* and *Reinhardt* teaches or suggests all of the elements of Claims 2, 10, 15 and 16 and therefore has failed to establish a *prima facie* case of obviousness with respect to Claims 2, 10, 15 and 16.

The aforementioned Claims 2, 10, 15 and 16 recite all of the exemplary features discussed above with respect to the rejection of independent Claims 1 and 9. Therefore, the rejections of Claims 2, 10, 15 and 16 are overcome for at least the same reasons given above with respect to the rejections of Claims 1 and 9.

Therefore, Appellant respectfully submits the Examiner has not made a *prima facie* case that the combination of *Kim*, *Hwang* and *Reinhardt* teaches or suggests Appellants' invention, as recited in Claims 2, 10, 15 and 16. Accordingly, Appellants respectfully request the withdrawal of the § 103 rejection and full allowance of Claims 2, 10, 15 and 16.

ZTE, Exhibit 1002-0094

CONCLUSION

The Appellants have demonstrated that the present invention as claimed is clearly distinguishable over the prior art cited of record. Therefore, the Appellants respectfully request the Board of Patent Appeals and Interferences to reverse the final rejection of the Examiner and instruct the Examiner to issue a notice of allowance of all claims.

Respectfully submitted,

Date: July 20, 2009

/Holly L. Rudnick/Reg. No. 43,065
Holly L. Rudnick
Attorney for Applicant

Garlick, Harrison & Markison
P.O. Box 160727
Austin, Texas 78716
(Direct) (214) 387-8097
(Fax) (214) 387-7949
(Email hrudnick@texaspatents.com)

ZTE, Exhibit 1002-0095

CLAIMS APPENDIX

1. A method for feeding back transmitter beamforming information from a receiving wireless communication device to a transmitting wireless communication device, the method comprising:

the receiving wireless communication device receiving a preamble sequence from the transmitting wireless device;

the receiving wireless device estimating a channel response based upon the preamble sequence;

the receiving wireless device determining an estimated transmitter beamforming unitary matrix (V) based upon the channel response and a receiver beamforming unitary matrix (U);

the receiving wireless device decomposing the estimated transmitter beamforming unitary matrix (V) to produce the transmitter beamforming information; and

the receiving wireless device wirelessly sending the transmitter beamforming information to the transmitting wireless device.

2. The method of claim 1 wherein the receiving wireless device determining an estimated transmitter beamforming unitary matrix (V) based upon the channel response and a receiver beamforming unitary matrix (U) comprises:

the receiving wireless device producing the estimated transmitter beamforming unitary matrix (V) in Cartesian coordinates; and

the receiving wireless device converting the estimated transmitter beamforming unitary matrix (V) to polar coordinates.

ZTE, Exhibit 1002-0096

3. The method of claim 1 wherein the channel response (H), estimated transmitter beamforming unitary matrix (V), and the receiver beamforming unitary matrix (U) are related by the equation:

H = UDV*

where, D is a diagonal matrix.

4. The method of claim 3, wherein the receiving wireless device determining an estimated transmitter beamforming unitary matrix (V) based upon the channel response and a receiver beamforming unitary matrix (U) comprises performing a Singular Value Decomposition (SVD) operation.

5. The method of claim 1, wherein the receiving wireless device decomposing the estimated transmitter beamforming unitary matrix (V) to produce the transmitter beamforming information comprises the receiving wireless device decomposing the estimated transmitter beamforming unitary matrix (V) using a QR decomposition technique.

6. The method of claim 5, wherein the QR decomposition technique comprises a Givens Rotation operation performed according to the equation:

$$V = \prod_{i=1}^{M} \left[D_i \left(1_{i-1} \quad e^{j\phi_{ii}} \quad \ldots \quad e^{j\phi_{iN}} \right) \prod_{j=i}^{N-1} G_j \left(\psi_{i,j} \right) \right] \times \tilde{I}_{NxM}$$

Where:

D_i is an NxN diagonal matrix with diagonal components in arguments;

I_{NxM} is an NxM identity matrix, where $(I)_{ii} = 1$ for i=1,…, min(M,N); and

wherein the transmitter beamforming information includes angles corresponding to elements of the diagonal matrix D and elements of the Givens Rotation.

7. The method of claim 1, wherein:

the transmitting wireless device transmits on N antennas; and

the receiving wireless device receives on M antennas.

ZTE, Exhibit 1002-0097

8. The method of claim 1, wherein at least one of the transmitting wireless device and the receiving wireless device supports Multiple Input Multiple Output (MIMO) operations.

9. A wireless communication device comprising:

a plurality of Radio Frequency (RF) components operable to receive an RF signal and to convert the RF signal to a baseband signal; and

a baseband processing module operable to:

receive a preamble sequence carried by the baseband signal;

estimate a channel response based upon the preamble sequence;

determine an estimated transmitter beamforming unitary matrix (V) based upon the channel response and a receiver beamforming unitary matrix (U);

decompose the estimated transmitter beamforming unitary matrix (V) to produce the transmitter beamforming information; and

form a baseband signal employed by the plurality of RF components to wirelessly send the transmitter beamforming information to the transmitting wireless device.

10. The wireless communication device of claim 9, wherein in determining an estimated transmitter beamforming unitary matrix (V) based upon the channel response and a receiver beamforming unitary matrix (U), the baseband processing module is operable to:

produce the estimated transmitter beamforming unitary matrix (V) in Cartesian coordinates; and

convert the estimated transmitter beamforming unitary matrix (V) to polar coordinates.

11. The wireless communication device of claim 9, wherein the channel response (H), estimated transmitter beamforming unitary matrix (V), and the receiver beamforming unitary matrix (U) are related by the equation:

$H = UDV^*$

where, D is a diagonal matrix.

ZTE, Exhibit 1002-0098

12. The wireless communication device of claim 9, wherein in determining the estimated transmitter beamforming unitary matrix (V) based upon the channel response and the receiver beamforming unitary matrix (U), the baseband processing module performs Singular Value Decomposition (SVD) operations.

13. The wireless communication device of claim 9, wherein in decomposing the estimated transmitter beamforming unitary matrix (V) to produce the transmitter beamforming information, the baseband processing module decomposes the estimated transmitter beamforming unitary matrix (V) using a QR decomposition technique.

14. The wireless communication device of claim 13, wherein the QR decomposition technique comprises a Givens Rotation operation performed according to the equation:

$$V = \prod_{i=1}^{M} \left[D_i \left(1_{i-1} \quad e^{j\phi_{ii}} \quad \ldots \quad e^{j\phi_{iN}} \right) \prod_{j=i}^{N-1} G_j\left(\psi_{i,j}\right) \right] \times \tilde{I}_{NxM}$$

Where:

D_i is an NxN diagonal matrix with diagonal components in arguments;

I_{NxM} is an NxM identity matrix, where $(I)_{ii} = 1$ for i=1,…, min(M,N); and

wherein the transmitter beamforming information includes angles corresponding to elements of the diagonal matrix D and elements of the Givens Rotation.

15. The wireless communication device of claim 10, wherein:

the transmitting wireless device transmits on N antennas; and

the wireless communication device includes M antennas.

16. The wireless communication device of claim 10, wherein the wireless communication device supports Multiple Input Multiple Output (MIMO) operations.

ZTE, Exhibit 1002-0099

17. A method for feeding back transmitter beamforming information from a receiving wireless communication device to a transmitting wireless communication device, the method comprising:

the receiving wireless communication device receiving a preamble sequence from the transmitting wireless device;

the receiving wireless device estimating a channel response based upon the preamble sequence;

the receiving wireless device decomposing the channel response based upon the channel response and a receiver beamforming unitary matrix (U) to produce an estimated transmitter beamforming unitary matrix (V);

the receiving wireless device decomposing the estimated transmitter beamforming unitary matrix (V) to produce the transmitter beamforming information; and

the receiving wireless device wirelessly sending the transmitter beamforming information to the transmitting wireless device.

18. The method of claim 17, wherein the receiving wireless device decomposing the channel response based upon the channel response and a receiver beamforming unitary matrix (U) to produce an estimated transmitter beamforming unitary matrix (V) includes performing a Singular Value Decomposition (SVD) operation.

19. The method of claim 17, wherein the receiving wireless device decomposing the estimated transmitter beamforming unitary matrix (V) to produce the transmitter beamforming information comprises the receiving wireless device decomposing the estimated transmitter beamforming unitary matrix (V) using a Givens Rotation operation performed according to the equation:

$$V = \prod_{i=1}^{M} \left[D_i \left(1_{i-1} \quad e^{j\phi_{ii}} \quad \ldots \quad e^{j\phi_{iN}} \right) \prod_{j=i}^{N-1} G_j \left(\psi_{i,j} \right) \right] \times \tilde{I}_{NxM}$$

Where:

D_i is an NxN diagonal matrix with diagonal components in arguments;

I_{NxM} is an NxM identity matrix, where $(I)_{ii} = 1$ for i=1,…, min(M,N); and

ZTE, Exhibit 1002-0100

wherein the transmitter beamforming information includes angles corresponding to elements of the diagonal matrix D and elements of the Givens Rotation.

20. The method of claim 19, wherein the transmitter beamforming information comprises element values of the diagonal matrix D and element values of the Givens Rotation matrix.

ZTE, Exhibit 1002-0101

EVIDENCE APPENDIX

None.

ZTE, Exhibit 1002-0102

RELATED PROCEEDING APPENDIX

None.

ZTE, Exhibit 1002-0103

Electronic Patent Application Fee Transmittal

Application Number:	11237341
Filing Date:	28-Sep-2005
Title of Invention:	Efficient feedback of channel information in a closed loop beamforming wireless communication system
First Named Inventor/Applicant Name:	Carlos Aldana
Filer:	Holly L. Rudnick/Sherry Wolf McWhinnie
Attorney Docket Number:	BP4880

Filed as Large Entity

Utility under 35 USC 111(a) Filing Fees

Description	Fee Code	Quantity	Amount	Sub-Total in USD($)
Basic Filing:				
Pages:				
Claims:				
Miscellaneous-Filing:				
Petition:				
Patent-Appeals-and-Interference:				
Filing a brief in support of an appeal	1402	1	540	540
Post-Allowance-and-Post-Issuance:				
Extension-of-Time:				

ZTE, Exhibit 1002-0104

Description	Fee Code	Quantity	Amount	Sub-Total in USD($)
Miscellaneous:				
		Total in USD ($)		**540**

Electronic Acknowledgement Receipt	
EFS ID:	5735018
Application Number:	11237341
International Application Number:	
Confirmation Number:	6712
Title of Invention:	Efficient feedback of channel information in a closed loop beamforming wireless communication system
First Named Inventor/Applicant Name:	Carlos Aldana
Customer Number:	51472
Filer:	Holly L. Rudnick/Sherry Wolf McWhinnie
Filer Authorized By:	Holly L. Rudnick
Attorney Docket Number:	BP4880
Receipt Date:	20-JUL-2009
Filing Date:	28-SEP-2005
Time Stamp:	17:34:07
Application Type:	Utility under 35 USC 111(a)

Payment information:

Submitted with Payment	yes
Payment Type	Credit Card
Payment was successfully received in RAM	$540
RAM confirmation Number	4061
Deposit Account	502126
Authorized User	MCWHINNIE,SHERRY
The Director of the USPTO is hereby authorized to charge indicated fees and credit any overpayment as follows: Charge any Additional Fees required under 37 C.F.R. Section 1.16 (National application filing, search, and examination fees) Charge any Additional Fees required under 37 C.F.R. Section 1.17 (Patent application and reexamination processing fees)	

Charge any Additional Fees required under 37 C.F.R. Section 1.21 (Miscellaneous fees and charges)					
File Listing:					
Document Number	**Document Description**	**File Name**	**File Size(Bytes)/ Message Digest**	**Multi Part /.zip**	**Pages (if appl.)**
1	Appeal Brief Filed	BP4880_Appeal_Brief_07202009.pdf	83581 5f4a23494e390b1bdc2a524477db29030988edc8	no	24
Warnings:					
Information:					
2	Fee Worksheet (PTO-875)	fee-info.pdf	30054 fa63269e34cca1707e506847a841d59b43b24aae	no	2
Warnings:					
Information:					
		Total Files Size (in bytes):	113635		

This Acknowledgement Receipt evidences receipt on the noted date by the USPTO of the indicated documents, characterized by the applicant, and including page counts, where applicable. It serves as evidence of receipt similar to a Post Card, as described in MPEP 503.

<u>New Applications Under 35 U.S.C. 111</u>
If a new application is being filed and the application includes the necessary components for a filing date (see 37 CFR 1.53(b)-(d) and MPEP 506), a Filing Receipt (37 CFR 1.54) will be issued in due course and the date shown on this Acknowledgement Receipt will establish the filing date of the application.

<u>National Stage of an International Application under 35 U.S.C. 371</u>
If a timely submission to enter the national stage of an international application is compliant with the conditions of 35 U.S.C. 371 and other applicable requirements a Form PCT/DO/EO/903 indicating acceptance of the application as a national stage submission under 35 U.S.C. 371 will be issued in addition to the Filing Receipt, in due course.

<u>New International Application Filed with the USPTO as a Receiving Office</u>
If a new international application is being filed and the international application includes the necessary components for an international filing date (see PCT Article 11 and MPEP 1810), a Notification of the International Application Number and of the International Filing Date (Form PCT/RO/105) will be issued in due course, subject to prescriptions concerning national security, and the date shown on this Acknowledgement Receipt will establish the international filing date of the application.

UNITED STATES PATENT AND TRADEMARK OFFICE

UNITED STATES DEPARTMENT OF COMMERCE
United States Patent and Trademark Office
Address: COMMISSIONER FOR PATENTS
P.O. Box 1450
Alexandria, Virginia 22313-1450
www.uspto.gov

APPLICATION NO.	FILING DATE	FIRST NAMED INVENTOR	ATTORNEY DOCKET NO.	CONFIRMATION NO.
11/237,341	09/28/2005	Carlos Aldana	BP4880	6712

51472 7590 06/19/2009
GARLICK HARRISON & MARKISON
P.O. BOX 160727
AUSTIN, TX 78716-0727

EXAMINER	
NEFF, MICHAEL R	
ART UNIT	PAPER NUMBER
2611	

MAIL DATE	DELIVERY MODE
06/19/2009	PAPER

Please find below and/or attached an Office communication concerning this application or proceeding.

The time period for reply, if any, is set in the attached communication.

ZTE, Exhibit 1002-0108

Notice of Panel Decision from Pre-Appeal Brief Review	Application/Control No.	Applicant(s)/Patent under Reexamination
	11/237,341	ALDANA ET AL.
	Michael Neff	Art Unit: 2611

This is in response to the Pre-Appeal Brief Request for Review filed 23 April 2009.

1. ☐ **Improper Request** – The Request is improper and a conference will not be held for the following reason(s):

☐ The Notice of Appeal has not been filed concurrent with the Pre-Appeal Brief Request.
☐ The request does not include reasons why a review is appropriate.
☐ A proposed amendment is included with the Pre-Appeal Brief request.
☐ Other: .

The time period for filing a response continues to run from the receipt date of the Notice of Appeal or from the mail date of the last Office communication, if no Notice of Appeal has been received.

2. ☒ **Proceed to Board of Patent Appeals and Interferences** – A Pre-Appeal Brief conference has been held. The application remains under appeal because there is at least one actual issue for appeal. Applicant is required to submit an appeal brief in accordance with 37 CFR 41.37. The time period for filing an appeal brief will be reset to be one month from mailing this decision, or the balance of the two-month time period running from the receipt of the notice of appeal, whichever is greater. Further, the time period for filing of the appeal brief is extendible under 37 CFR 1.136 based upon the mail date of this decision or the receipt date of the notice of appeal, as applicable.

☒ The panel has determined the status of the claim(s) is as follows:
Claim(s) allowed: _____.
Claim(s) objected to: _____.
Claim(s) rejected: *1-20*.
Claim(s) withdrawn from consideration: _____.

3. ☐ **Allowable application** – A conference has been held. The rejection is withdrawn and a Notice of Allowance will be mailed. Prosecution on the merits remains closed. No further action is required by applicant at this time.

4. ☐ **Reopen Prosecution** – A conference has been held. The rejection is withdrawn and a new Office action will be mailed. No further action is required by applicant at this time.

All participants:

(1) *SHUWANG LIU*. (3)*Chieh Fan*.

(2) *MIchael Neff*. (4)_____.

/Shuwang Liu/
Supervisory Patent Examiner, Art Unit 2611

/Chieh M Fan/
Supervisory Patent Examiner, Art Unit 2611

ZTE, Exhibit 1002-0109

Doc Code: AP.PRE.REQ

PTO/SB/33 (01-09)
Approved for use through 02/28/2009. OMB 0651-0031
U.S. Patent and Trademark Office; U.S. DEPARTMENT OF COMMERCE
Under the Paperwork Reduction Act of 1995, no persons are required to respond to a collection of information unless it displays a valid OMB control number.

PRE-APPEAL BRIEF REQUEST FOR REVIEW

Docket Number (Optional): BP4880

I hereby certify that this correspondence is being deposited with the United States Postal Service with sufficient postage as first class mail in an envelope addressed to "Mail Stop AF, Commissioner for Patents, P.O. Box 1450, Alexandria, VA 22313-1450" [37 CFR 1.8(a)]

on _____

Signature _____

Typed or printed name _____

Application Number	Filed
11/237,341	2005-09-28

First Named Inventor: Carlos Aldana

Art Unit	Examiner
2611	Michael R. Neff

Applicant requests review of the final rejection in the above-identified application. No amendments are being filed with this request.

This request is being filed with a notice of appeal.

The review is requested for the reason(s) stated on the attached sheet(s).
Note: No more than five (5) pages may be provided.

I am the

- ☐ applicant/inventor.
- ☐ assignee of record of the entire interest. See 37 CFR 3.71. Statement under 37 CFR 3.73(b) is enclosed. (Form PTO/SB/96)
- ☑ attorney or agent of record. Registration number 43,065.
- ☐ attorney or agent acting under 37 CFR 1.34. Registration number if acting under 37 CFR 1.34 _____

/Holly L. Rudnick/
Signature

Holly L. Rudnick
Typed or printed name

(214) 387-8097
Telephone number

April 23, 2009
Date

NOTE: Signatures of all the inventors or assignees of record of the entire interest or their representative(s) are required. Submit multiple forms if more than one signature is required, see below*.

☑ *Total of 1 forms are submitted.

This collection of information is required by 35 U.S.C. 132. The information is required to obtain or retain a benefit by the public which is to file (and by the USPTO to process) an application. Confidentiality is governed by 35 U.S.C. 122 and 37 CFR 1.11, 1.14 and 41.6. This collection is estimated to take 12 minutes to complete, including gathering, preparing, and submitting the completed application form to the USPTO. Time will vary depending upon the individual case. Any comments on the amount of time you require to complete this form and/or suggestions for reducing this burden, should be sent to the Chief Information Officer, U.S. Patent and Trademark Office, U.S. Department of Commerce, P.O. Box 1450, Alexandria, VA 22313-1450. DO NOT SEND FEES OR COMPLETED FORMS TO THIS ADDRESS. **SEND TO: Mail Stop AF, Commissioner for Patents, P.O. Box 1450, Alexandria, VA 22313-1450.**

If you need assistance in completing the form, call 1-800-PTO-9199 and select option 2.

IN THE UNITED STATES PATENT AND TRADEMARK OFFICE

Applicant(s):	Carlos Aldana	**Docket:**	BP4880
Serial No.:	11/237,341	**Art Unit:**	2611
Filed:	September 28, 2005	**Examiner:**	Michael R. Neff
Title:	Efficient Feedback of Channel Information in a Closed Loop Beamforming Wireless Communication System		

Commissioner for Patents
P.O. Box 1450
Alexandria, VA 22313-1450

ARGUMENT ACCOMPANYING THE
PRE-APPEAL BRIEF REQUEST FOR REVIEW

Sir:

Submitted with the Pre-Appeal Brief Request for Review are these arguments and remarks, which are being filed together with a Notice of Appeal, accompanied by the appropriate fee, and before the filing of an Appeal Brief. A Final Office Action was mailed on January 23, 2009, in which Claims 1-20 were pending in the application.

In the Final Office Action, the Examiner reasserted the rejections of Claims 1-20. In particular, Claims 1, 3, 4, 7, 8, 9, 11, 12, 17 and 18 were rejected under 35 U.S.C. § 103(a) as being unpatentable over Kim et al. (US Patent Application Publication No. 2002/0187753) in view of Hwang et al. (U.S. Patent Application Publication No. 2004/0042558), Claims 5, 6, 13, 14, 19 and 20 were rejected under 35 U.S.C. § 103(a) as being unpatentable over Kim et al. and Hwang et al. in view of Ma et al. (US Publication "A unified algebraic transformation approach for parallel recursive and adaptive filtering and SVD algorithms", IEEE 2001) and Claims 2, 10, 15 and 16 were rejected under 35 U.S.C. § 103(a) as being unpatentable over Kim et al. and Hwang et al. in view of Reinhardt (U.S. Patent No. 5,541,607).

ZTE, Exhibit 1002-0111

Applicant respectfully believes that there is a clear deficiency in the prima facie case in support of these rejections and requests review of the allowability of claims.

Independent Claim 1 is provided below as a representative claim:

> 1. A method for feeding back transmitter beamforming information from a receiving wireless communication device to a transmitting wireless communication device, the method comprising:
>
> the receiving wireless communication device receiving a preamble sequence from the transmitting wireless device;
>
> the receiving wireless device estimating a channel response based upon the preamble sequence;
>
> the receiving wireless device determining an estimated transmitter beamforming unitary matrix (V) based upon the channel response and a receiver beamforming unitary matrix (U);
>
> the receiving wireless device decomposing the estimated transmitter beamforming unitary matrix (V) to produce the transmitter beamforming information; and
>
> the receiving wireless device wirelessly sending the transmitter beamforming information to the transmitting wireless device

In the Final Office Action, the Examiner stated that "although the disclosure [of Kim] does not explicitly state 'beamforming', the Examiner interprets the decomposition means as pointed out in paragraph 0009 and further cited areas which provide for the determination of feedback information which directly effects the functionality of the transmitter antenna array properties to fully encompass the claimed limitations as currently stated."

However, as Applicant argued in response to the Final Office Action, the decomposition described in paragraph [0009] of Kim et al. and all other cited passages of Kim et al. merely refer to a method of determining the "**transmission power**" to be allocated to each of the transmit

ZTE, Exhibit 1002-0112

antennas in order to cancel the interference between the signals produced by the antennas. *See, Kim et al., paragraphs [0008], [0009]-[0013], [0017], [0019], [0020], [0023] and [0065].*

For example, paragraph [0019] of Kim et al. states that the receiver includes "an allocation power calculator for calculating the transmission power to be allocated to each of the base-band signals of the plurality of first transmitting antennae using the estimated channel response" (emphasis added). The allocation power calculator is further explained in paragraph [0020] of Kim et al.: "The allocation power calculator preferably determines powers p_1, p_2, ... , p_{nT}; which maximize channel capacity C_{prop} as the transmission power to be allocated to the base-band signals of the plurality of first transmitting antennae" (emphasis added).

As another example, paragraph [0023] of Kim et al. describes the method of Kim et al. as "a radio communication method performed by such a radio communication apparatus having maximized channel capacity, including: allocating transmission power of each of a plurality of base-band signals of a plurality of first transmitting antennae, which contain an information signal given from outside, using feedback information recovered from a feedback signal, modulating the plurality of base-band signals with the allocated transmission power, converting the modulated base-band signals into RF signals, and transmitting the RF signals; and estimating the channel response experienced during the transmission of the RF signals, recovering the information signal from the RF signals using the estimated channel response, and transmitting the feedback signal containing information regarding the transmission power to be allocated, calculated using the estimated channel response, to the transmitter by radio" (emphasis added).

As can be seen from the above cited passages, Kim et al. only teaches systems and methods for a receiver to calculate transmit power information (e.g., the transmission power to be allocated by a transmitter to transmitting antennae) and for feeding back the calculated

ZTE, Exhibit 1002-0113

transmit power information to the transmitter. By contrast, the present invention is directed to systems and method for "feeding back transmitter beamforming information." Beamforming is defined in the specification on page 4 as referring to "shifting a signal in time or phase." This has nothing to do with the transmit power. Thus, a reference (i.e., Kim et al.) that teaches determining transmitter power information does not teach or suggest any mechanism for determining "transmitter beamforming information."

More specifically, Kim et al. does not teach or suggest at least the following features recited in independent Claim 1 (and similarly recited in independent Claims 9 and 17) (1) "*the receiving wireless device determining an estimated transmitter beamforming unitary matrix (V) based upon the channel response and a receiver beamforming unitary matrix (U);*" and (2) "*the receiving wireless device decomposing the estimated transmitter beamforming unitary matrix (V) to produce the transmitter beamforming information*." Moreover, Kim et al. in combination with Hwang et al. also does not teach or suggest the above-recited features.

In the Advisory Action mailed on April 2, 2009, the Examiner stated that "accounting for equation 2 [in Kim et al.], the transmit power can be seen to directly effect the beamforming matrices." However, equation 2 in Kim et al. merely describes a relationship between matrices used to allocate transmit power among different channels. The matrices in equation 2 are power matrices, not beamforming matrices. Thus, equation 2 does not imply any direct relationship between the transmit power and beamforming.

In view of the foregoing discussion, Applicant respectfully submits that the combination of Kim et al. and Hwang et al. does not teach or suggest each and every element of independent Claims 1, 9 and 17 (and their dependent claims) arranged as they are in the claims. Accordingly,

ZTE, Exhibit 1002-0114

Applicant respectfully requests that the Examiner withdraw the § 103(a) rejections of Claims 1, 3, 4, 7, 8, 9, 11, 12, 17 and 18.

In addition, the aforementioned Claims 2, 5, 6, 10, 13-16, 19 and 20 recite all of the exemplary features discussed above with respect to the rejection of Claims 1, 9 and 17. Therefore, Applicant respectfully submits that Claims 2, 5, 6, 10, 13-16, 19 and 20 are not obvious over the prior art of record. Accordingly, Applicant respectfully requests that the Examiner withdraw the § 103 rejection of Claims 2, 5, 6, 10, 13-16, 19 and 20.

CONCLUSION

As a result of the foregoing, the Applicant asserts that the remaining claims in the Application are in condition for allowance, and respectfully requests an early allowance of such claims.

The Commissioner is hereby authorized to charge any additional fees connected with this communication or credit any overpayment to Garlick Harrison & Markison Deposit Account No. 50-2126 (Ref. BP4880).

Respectfully submitted,
GARLICK HARRISON & MARKISON

Dated: April 23, 2009

/Holly L. Rudnick/Reg. No. 43,065

Holly L. Rudnick
Attorney for Applicant

Garlick Harrison & Markison
P.O. Box 160727
Austin, TX 78716-0727
(214) 387-8097/office
(214) 387-7949/facsimile
(e-mail: hrudnick@texaspatents.com)

ZTE, Exhibit 1002-0115

Electronic Patent Application Fee Transmittal

Application Number:	11237341
Filing Date:	28-Sep-2005
Title of Invention:	Efficient feedback of channel information in a closed loop beamforming wireless communication system
First Named Inventor/Applicant Name:	Carlos Aldana
Filer:	Holly L. Rudnick/Melanie Murdock
Attorney Docket Number:	BP4880

Filed as Large Entity

Utility under 35 USC 111(a) Filing Fees

Description	Fee Code	Quantity	Amount	Sub-Total in USD($)
Basic Filing:				
Pages:				
Claims:				
Miscellaneous-Filing:				
Petition:				
Patent-Appeals-and-Interference:				
Notice of appeal	1401	1	540	540
Post-Allowance-and-Post-Issuance:				
Extension-of-Time:				

Description	Fee Code	Quantity	Amount	Sub-Total in USD($)
Miscellaneous:				
		Total in USD ($)		**540**

Electronic Acknowledgement Receipt

EFS ID:	5210314
Application Number:	11237341
International Application Number:	
Confirmation Number:	6712
Title of Invention:	Efficient feedback of channel information in a closed loop beamforming wireless communication system
First Named Inventor/Applicant Name:	Carlos Aldana
Customer Number:	51472
Filer:	Holly L. Rudnick/Melanie Murdock
Filer Authorized By:	Holly L. Rudnick
Attorney Docket Number:	BP4880
Receipt Date:	23-APR-2009
Filing Date:	28-SEP-2005
Time Stamp:	18:34:07
Application Type:	Utility under 35 USC 111(a)

Payment information:

Submitted with Payment	yes
Payment Type	Credit Card
Payment was successfully received in RAM	$540
RAM confirmation Number	4816
Deposit Account	502126
Authorized User	MURDOCK,MELANIE
The Director of the USPTO is hereby authorized to charge indicated fees and credit any overpayment as follows: Charge any Additional Fees required under 37 C.F.R. Section 1.16 (National application filing, search, and examination fees) Charge any Additional Fees required under 37 C.F.R. Section 1.17 (Patent application and reexamination processing fees)	

Charge any Additional Fees required under 37 C.F.R. Section 1.21 (Miscellaneous fees and charges)

File Listing:

Document Number	Document Description	File Name	File Size(Bytes)/ Message Digest	Multi Part /.zip	Pages (if appl.)
1	Notice of Appeal Filed	BP4880_Notice_Apl.pdf	343823 479424b4d928560eb7f25b2ff06b1b7847dbe8eb	no	2
Warnings:					
Information:					
2	Pre-Brief Conference request	BP4880_PABR_sb33.pdf	152826 c7802d7840ae80aa0c7ba77caa77b29a13ba8a69	no	1
Warnings:					
Information:					
3	Pre-Brief Conference request	BP4880_PreApl_Brf_Req_Rvw.pdf	110093 f4c6a42c7a8b5305356304ce4370682a232e5cde	no	5
Warnings:					
Information:					
4	Fee Worksheet (PTO-875)	fee-info.pdf	30006 9cadc5dd58bb330e883e3f50a50664676c818e12	no	2
Warnings:					
Information:					
		Total Files Size (in bytes):	636748		

This Acknowledgement Receipt evidences receipt on the noted date by the USPTO of the indicated documents, characterized by the applicant, and including page counts, where applicable. It serves as evidence of receipt similar to a Post Card, as described in MPEP 503.

<u>New Applications Under 35 U.S.C. 111</u>
If a new application is being filed and the application includes the necessary components for a filing date (see 37 CFR 1.53(b)-(d) and MPEP 506), a Filing Receipt (37 CFR 1.54) will be issued in due course and the date shown on this Acknowledgement Receipt will establish the filing date of the application.

<u>National Stage of an International Application under 35 U.S.C. 371</u>
If a timely submission to enter the national stage of an international application is compliant with the conditions of 35 U.S.C. 371 and other applicable requirements a Form PCT/DO/EO/903 indicating acceptance of the application as a national stage submission under 35 U.S.C. 371 will be issued in addition to the Filing Receipt, in due course.

<u>New International Application Filed with the USPTO as a Receiving Office</u>
If a new international application is being filed and the international application includes the necessary components for an international filing date (see PCT Article 11 and MPEP 1810), a Notification of the International Application Number and of the International Filing Date (Form PCT/RO/105) will be issued in due course, subject to prescriptions concerning national security, and the date shown on this Acknowledgement Receipt will establish the international filing date of the application.

PTO/SB/31 (03-09)
Approved for use through 04/30/2009. OMB 0651-0031
U.S. Patent and Trademark Office; U.S. DEPARTMENT OF COMMERCE
Under the Paperwork Reduction Act of 1995, no persons are required to respond to a collection of information unless it displays a valid OMB control number.

NOTICE OF APPEAL FROM THE EXAMINER TO THE BOARD OF PATENT APPEALS AND INTERFERENCES

Docket Number (Optional): BP4880

I hereby certify that this correspondence is being facsimile transmitted to the USPTO or deposited with the United States Postal Service with sufficient postage as first class mail in an envelope addressed to "Commissioner for Patents, P.O. Box 1450, Alexandria, VA 22313-1450" [37 CFR 1.8(a)]
on _____

Signature _____

Typed or printed name _____

In re Application of	
Carlos Aldana	
Application Number: 11/237,341	Filed: 2005-09-28
For: Efficient Feedback of Channel ...	
Art Unit: 2611	Examiner: Michael R. Neff

Applicant hereby **appeals** to the Board of Patent Appeals and Interferences from the last decision of the examiner.

The fee for this Notice of Appeal is (37 CFR 41.20(b)(1)) $ 540.00

☐ Applicant claims small entity status. See 37 CFR 1.27. Therefore, the fee shown above is reduced by half, and the resulting fee is: $ _____

☐ A check in the amount of the fee is enclosed.

☑ Payment by credit card. Form PTO-2038 is attached.

☐ The Director has already been authorized to charge fees in this application to a Deposit Account.

☑ The Director is hereby authorized to charge any fees which may be required, or credit any overpayment to Deposit Account No. 50-2126 .

☐ A petition for an extension of time under 37 CFR 1.136(a) (PTO/SB/22) is enclosed.

WARNING: Information on this form may become public. Credit card information should not be included on this form. Provide credit card information and authorization on PTO-2038.

I am the

☐ applicant/inventor.

☐ assignee of record of the entire interest.
See 37 CFR 3.71. Statement under 37 CFR 3.73(b) is enclosed.
(Form PTO/SB/96)

☑ attorney or agent of record.
Registration number 43,065.

☐ attorney or agent acting under 37 CFR 1.34.
Registration number if acting under 37 CFR 1.34. _____

/Holly L. Rudnick/
Signature

Holly L. Rudnick
Typed or printed name

(214) 387-8097
Telephone number

April 23, 2009
Date

NOTE: Signatures of all the inventors or assignees of record of the entire interest or their representative(s) are required.
Submit multiple forms if more than one signature is required, see below*.

☐ *Total of _____ forms are submitted.

This collection of information is required by 37 CFR 41.31. The information is required to obtain or retain a benefit by the public which is to file (and by the USPTO to process) an application. Confidentiality is governed by 35 U.S.C. 122 and 37 CFR 1.11, 1.14 and 41.6. This collection is estimated to take 12 minutes to complete, including gathering, preparing, and submitting the completed application form to the USPTO. Time will vary depending upon the individual case. Any comments on the amount of time you require to complete this form and/or suggestions for reducing this burden, should be sent to the Chief Information Officer, U.S. Patent and Trademark Office, U.S. Department of Commerce, P.O. Box 1450, Alexandria, VA 22313-1450. DO NOT SEND FEES OR COMPLETED FORMS TO THIS ADDRESS. **SEND TO: Commissioner for Patents, P.O. Box 1450, Alexandria, VA 22313-1450.**

If you need assistance in completing the form, call 1-800-PTO-9199 and select option 2.

Privacy Act Statement

The **Privacy Act of 1974 (P.L. 93-579)** requires that you be given certain information in connection with your submission of the attached form related to a patent application or patent. Accordingly, pursuant to the requirements of the Act, please be advised that: (1) the general authority for the collection of this information is 35 U.S.C. 2(b)(2); (2) furnishing of the information solicited is voluntary; and (3) the principal purpose for which the information is used by the U.S. Patent and Trademark Office is to process and/or examine your submission related to a patent application or patent. If you do not furnish the requested information, the U.S. Patent and Trademark Office may not be able to process and/or examine your submission, which may result in termination of proceedings or abandonment of the application or expiration of the patent.

The information provided by you in this form will be subject to the following routine uses:

1. The information on this form will be treated confidentially to the extent allowed under the Freedom of Information Act (5 U.S.C. 552) and the Privacy Act (5 U.S.C 552a). Records from this system of records may be disclosed to the Department of Justice to determine whether disclosure of these records is required by the Freedom of Information Act.
2. A record from this system of records may be disclosed, as a routine use, in the course of presenting evidence to a court, magistrate, or administrative tribunal, including disclosures to opposing counsel in the course of settlement negotiations.
3. A record in this system of records may be disclosed, as a routine use, to a Member of Congress submitting a request involving an individual, to whom the record pertains, when the individual has requested assistance from the Member with respect to the subject matter of the record.
4. A record in this system of records may be disclosed, as a routine use, to a contractor of the Agency having need for the information in order to perform a contract. Recipients of information shall be required to comply with the requirements of the Privacy Act of 1974, as amended, pursuant to 5 U.S.C. 552a(m).
5. A record related to an International Application filed under the Patent Cooperation Treaty in this system of records may be disclosed, as a routine use, to the International Bureau of the World Intellectual Property Organization, pursuant to the Patent Cooperation Treaty.
6. A record in this system of records may be disclosed, as a routine use, to another federal agency for purposes of National Security review (35 U.S.C. 181) and for review pursuant to the Atomic Energy Act (42 U.S.C. 218(c)).
7. A record from this system of records may be disclosed, as a routine use, to the Administrator, General Services, or his/her designee, during an inspection of records conducted by GSA as part of that agency's responsibility to recommend improvements in records management practices and programs, under authority of 44 U.S.C. 2904 and 2906. Such disclosure shall be made in accordance with the GSA regulations governing inspection of records for this purpose, and any other relevant (*i.e.*, GSA or Commerce) directive. Such disclosure shall not be used to make determinations about individuals.
8. A record from this system of records may be disclosed, as a routine use, to the public after either publication of the application pursuant to 35 U.S.C. 122(b) or issuance of a patent pursuant to 35 U.S.C. 151. Further, a record may be disclosed, subject to the limitations of 37 CFR 1.14, as a routine use, to the public if the record was filed in an application which became abandoned or in which the proceedings were terminated and which application is referenced by either a published application, an application open to public inspection or an issued patent.
9. A record from this system of records may be disclosed, as a routine use, to a Federal, State, or local law enforcement agency, if the USPTO becomes aware of a violation or potential violation of law or regulation.

UNITED STATES PATENT AND TRADEMARK OFFICE

UNITED STATES DEPARTMENT OF COMMERCE
United States Patent and Trademark Office
Address: COMMISSIONER FOR PATENTS
P.O. Box 1450
Alexandria, Virginia 22313-1450
www.uspto.gov

APPLICATION NO.	FILING DATE	FIRST NAMED INVENTOR	ATTORNEY DOCKET NO.	CONFIRMATION NO.
11/237,341	09/28/2005	Carlos Aldana	BP4880	6712

51472 7590 04/02/2009
GARLICK HARRISON & MARKISON
P.O. BOX 160727
AUSTIN, TX 78716-0727

EXAMINER	
NEFF, MICHAEL R	
ART UNIT	PAPER NUMBER
2611	

MAIL DATE	DELIVERY MODE
04/02/2009	PAPER

Please find below and/or attached an Office communication concerning this application or proceeding.

The time period for reply, if any, is set in the attached communication.

ZTE, Exhibit 1002-0122

Advisory Action Before the Filing of an Appeal Brief	**Application No.** 11/237,341	**Applicant(s)** ALDANA ET AL.	
	Examiner MICHAEL R. NEFF	**Art Unit** 2611	

--The MAILING DATE of this communication appears on the cover sheet with the correspondence address --

THE REPLY FILED 18 March 2009 FAILS TO PLACE THIS APPLICATION IN CONDITION FOR ALLOWANCE.

1. ☒ The reply was filed after a final rejection, but prior to or on the same day as filing a Notice of Appeal. To avoid abandonment of this application, applicant must timely file one of the following replies: (1) an amendment, affidavit, or other evidence, which places the application in condition for allowance; (2) a Notice of Appeal (with appeal fee) in compliance with 37 CFR 41.31; or (3) a Request for Continued Examination (RCE) in compliance with 37 CFR 1.114. The reply must be filed within one of the following time periods:
   a) ☐ The period for reply expires _____months from the mailing date of the final rejection.
   b) ☒ The period for reply expires on: (1) the mailing date of this Advisory Action, or (2) the date set forth in the final rejection, whichever is later. In no event, however, will the statutory period for reply expire later than SIX MONTHS from the mailing date of the final rejection.

   Examiner Note: If box 1 is checked, check either box (a) or (b). ONLY CHECK BOX (b) WHEN THE FIRST REPLY WAS FILED WITHIN TWO MONTHS OF THE FINAL REJECTION. See MPEP 706.07(f).

Extensions of time may be obtained under 37 CFR 1.136(a). The date on which the petition under 37 CFR 1.136(a) and the appropriate extension fee have been filed is the date for purposes of determining the period of extension and the corresponding amount of the fee. The appropriate extension fee under 37 CFR 1.17(a) is calculated from: (1) the expiration date of the shortened statutory period for reply originally set in the final Office action; or (2) as set forth in (b) above, if checked. Any reply received by the Office later than three months after the mailing date of the final rejection, even if timely filed, may reduce any earned patent term adjustment. See 37 CFR 1.704(b).

NOTICE OF APPEAL

2. ☐ The Notice of Appeal was filed on _____. A brief in compliance with 37 CFR 41.37 must be filed within two months of the date of filing the Notice of Appeal (37 CFR 41.37(a)), or any extension thereof (37 CFR 41.37(e)), to avoid dismissal of the appeal. Since a Notice of Appeal has been filed, any reply must be filed within the time period set forth in 37 CFR 41.37(a).

AMENDMENTS

3. ☐ The proposed amendment(s) filed after a final rejection, but prior to the date of filing a brief, will not be entered because
   (a) ☐ They raise new issues that would require further consideration and/or search (see NOTE below);
   (b) ☐ They raise the issue of new matter (see NOTE below);
   (c) ☐ They are not deemed to place the application in better form for appeal by materially reducing or simplifying the issues for appeal; and/or
   (d) ☐ They present additional claims without canceling a corresponding number of finally rejected claims.

   NOTE: _____. (See 37 CFR 1.116 and 41.33(a)).
4. ☐ The amendments are not in compliance with 37 CFR 1.121. See attached Notice of Non-Compliant Amendment (PTOL-324).
5. ☐ Applicant's reply has overcome the following rejection(s): _____.
6. ☐ Newly proposed or amended claim(s) _____ would be allowable if submitted in a separate, timely filed amendment canceling the non-allowable claim(s).
7. ☐ For purposes of appeal, the proposed amendment(s): a) ☐ will not be entered, or b) ☐ will be entered and an explanation of how the new or amended claims would be rejected is provided below or appended.
   The status of the claim(s) is (or will be) as follows:
   Claim(s) allowed: _____.
   Claim(s) objected to: _____.
   Claim(s) rejected: _____.
   Claim(s) withdrawn from consideration: _____.

AFFIDAVIT OR OTHER EVIDENCE

8. ☐ The affidavit or other evidence filed after a final action, but before or on the date of filing a Notice of Appeal will not be entered because applicant failed to provide a showing of good and sufficient reasons why the affidavit or other evidence is necessary and was not earlier presented. See 37 CFR 1.116(e).
9. ☐ The affidavit or other evidence filed after the date of filing a Notice of Appeal, but prior to the date of filing a brief, will not be entered because the affidavit or other evidence failed to overcome all rejections under appeal and/or appellant fails to provide a showing a good and sufficient reasons why it is necessary and was not earlier presented. See 37 CFR 41.33(d)(1).
10. ☐ The affidavit or other evidence is entered. An explanation of the status of the claims after entry is below or attached.

REQUEST FOR RECONSIDERATION/OTHER

11. ☒ The request for reconsideration has been considered but does NOT place the application in condition for allowance because: The examiner has carefully reviewed the applicants arguments but firmly believes that the previously provided grounds of rejection is proper for the claimed limitations. The applicant's argument is directed towards the limitation of feeding back beamforming information to the transmitter side of the communication device. Looking at the Kim reference previously provided the examiner maintains the rejection is proper, considering passages at paragraphs 0009 and 0017 wherein accounting for equation 2, the transmit power can be seen to directly effect the beamforming matrices. Therefore the Examiner has maintained all previously provided grounds of rejection..
12. ☐ Note the attached Information *Disclosure Statement*(s). (PTO/SB/08) Paper No(s). _____
13. ☐ Other: _____.

/Shuwang Liu/
Supervisory Patent Examiner, Art Unit 2611

/MICHAEL R. NEFF/
Examiner, Art Unit 2611

DOCKET NO. BP4880

Customer No. 51,472

IN THE UNITED STATES PATENT AND TRADEMARK OFFICE

In re Application of:	Carlos Aldana
Serial No.	11/237,341
Filed:	September 28, 2005
For:	Efficient Feedback of Channel Information in a Closed Loop Beamforming Wireless Communication System
Art Unit.:	2611
Examiner:	Michael R. Neff

Mail Stop AF
Commissioner for Patents
P.O. Box 1450
Alexandria, VA 22313-1450

RESPONSE TO OFFICIAL ACTION UNDER 37 C.F.R. § 1.116

Sir:

Applicant hereby submits this Response to the Final Office Action having a mailed date of January 23, 2009, and makes the following arguments and remarks in response thereto. As such, reconsideration of the action and allowance of the present application are respectfully requested and are believed to be appropriate in view of the following:

Amendments to the Specification – N/A;

Amendments to the Claims – N/A;

Amendments to the Drawings – N/A; and

Remarks beginning on page **2** of this paper.

ZTE, Exhibit 1002-0125

REMARKS/ARGUMENTS

Claims 1-20 remain pending in the present application. No claims have been amended. Applicant respectfully requests favorable reconsideration of the claims in view of the following remarks.

Claims 1, 3, 4, 7, 8, 9, 11, 12, 17 and 18 were rejected under 35 U.S.C. § 103(a) as being unpatentable over Kim et al. (US Patent Application Publication No. 2002/0187753) in view of Hwang et al. (U.S. Patent Application Publication No. 2004/0042558). Applicant respectfully traverses these rejections.

In the Final Office Action, the Examiner stated that "although the disclosure [of Kim] does not explicitly state 'beamforming', the Examiner interprets the decomposition means as pointed out in paragraph 0009 and further cited areas which provide for the determination of feedback information which directly effects the functionality of the transmitter antenna array properties to fully encompass the claimed limitations as currently stated."

Applicant respectfully disagrees. The decomposition described in paragraph [0009] of Kim et al. and all other cited passages of Kim et al. merely refer to a method of determining the "**transmission power**" to be allocated to each of the transmit antennas in order to cancel the interference between the signals produced by the antennas. *See, Kim et al., paragraphs [0008], [0009]-[0013], [0017], [0019], [0020], [0023] and [0065].*

For example, paragraph [0019] of Kim et al. states that the receiver includes "an allocation power calculator for calculating the transmission power to be allocated to each of the base-band signals of the plurality of first transmitting antennae using the estimated channel response" (emphasis added). The allocation power calculator is further

ZTE, Exhibit 1002-0126

explained in paragraph [0020] of Kim et al.: "The allocation power calculator preferably determines powers p_1, p_2, ... , p_{nT}; which maximize channel capacity C_{prop} as the transmission power to be allocated to the base-band signals of the plurality of first transmitting antennae" (emphasis added).

As another example, paragraph [0023] of Kim et al. describes the method of Kim et al. as "a radio communication method performed by such a radio communication apparatus having maximized channel capacity, including: allocating transmission power of each of a plurality of base-band signals of a plurality of first transmitting antennae, which contain an information signal given from outside, using feedback information recovered from a feedback signal, modulating the plurality of base-band signals with the allocated transmission power, converting the modulated base-band signals into RF signals, and transmitting the RF signals; and estimating the channel response experienced during the transmission of the RF signals, recovering the information signal from the RF signals using the estimated channel response, and transmitting the feedback signal containing information regarding the transmission power to be allocated, calculated using the estimated channel response, to the transmitter by radio" (emphasis added).

As can be seen from the above cited passages, Kim et al. only teaches systems and methods for a receiver to calculate transmit power information (e.g., the transmission power to be allocated by a transmitter to transmitting antennae) and for feeding back the calculated transmit power information to the transmitter. By contrast, the present invention is directed to systems and method for "feeding back transmitter beamforming information." Beamforming is defined in the specification on page 4 as referring to "shifting a signal in time or phase." This has nothing to do with the transmit power.

ZTE, Exhibit 1002-0127

Thus, a reference (i.e., Kim et al.) that teaches determining transmitter power information does not teach or suggest any mechanism for determining "transmitter beamforming information."

More specifically, Kim et al. does not teach or suggest at least the following features recited in independent Claim 1 (and similarly recited in independent Claims 9 and 17) (1) "*the receiving wireless device determining an estimated transmitter beamforming unitary matrix (V) based upon the channel response and a receiver beamforming unitary matrix (U);*" and (2) "*the receiving wireless device decomposing the estimated transmitter beamforming unitary matrix (V) to produce the transmitter beamforming information.*" Moreover, Kim et al. in combination with Hwang et al. also does not teach or suggest the above-recited features.

In view of the foregoing discussion, Applicant respectfully submits that the combination of Kim et al. and Hwang et al. does not teach or suggest each and every element of independent Claims 1, 9 and 17 (and their dependent claims) arranged as they are in the claims. Accordingly, Applicant respectfully requests that the Examiner withdraw the § 103(a) rejections of Claims 1, 3, 4, 7, 8, 9, 11, 12, 17 and 18.

Claims 5, 6, 13, 14, 19 and 20 were rejected under 35 U.S.C. § 103(a) as being unpatentable over Kim et al. and Hwang et al. in view of Ma et al. (US Publication "A unified algebraic transformation approach for parallel recursive and adaptive filtering and SVD algorithms", IEEE 2001). In addition, Claims 2, 10, 15 and 16 were rejected under 35 U.S.C. § 103(a) as being unpatentable over Kim et al. and Hwang et al. in view of Reinhardt (U.S. Patent No. 5,541,607).

ZTE, Exhibit 1002-0128

The aforementioned Claims 2, 5, 6, 10, 13-16, 19 and 20 are dependent upon claims that Applicant believes are now allowable. Therefore, for at least the same reasons given above with respect to the rejections of Claims 1, 9 and 17, Applicant respectfully submits that Claims 2, 5, 6, 10, 13-16, 19 and 20 are not obvious over the prior art of record. Accordingly, Applicant respectfully requests that the Examiner withdraw the § 103 rejection of Claims 2, 5, 6, 10, 13-16, 19 and 20.

CONCLUSION

As a result of the foregoing, the Applicant asserts that the remaining Claims in the Application are in condition for allowance, and respectfully requests an early allowance of such Claims.

The Commissioner is hereby authorized to charge any additional fees connected with this communication or credit any overpayment to Garlick Harrison & Markison Deposit Account No. 50-2126 (Ref. BP4880).

Respectfully submitted,

Date: March 18, 2009

/Holly L. Rudnick/Reg. No. 43,065
Holly L. Rudnick
Attorney for Applicant

Garlick Harrison & Markison
P.O. Box 160727
Austin, TX 78716-0727
(214) 387-8097/office
(214) 387-7949/facsimile

ZTE, Exhibit 1002-0129

Electronic Acknowledgement Receipt

EFS ID:	4986527
Application Number:	11237341
International Application Number:	
Confirmation Number:	6712
Title of Invention:	Efficient feedback of channel information in a closed loop beamforming wireless communication system
First Named Inventor/Applicant Name:	Carlos Aldana
Customer Number:	51472
Filer:	Holly L. Rudnick/Sherry Wolf McWhinnie
Filer Authorized By:	Holly L. Rudnick
Attorney Docket Number:	BP4880
Receipt Date:	18-MAR-2009
Filing Date:	28-SEP-2005
Time Stamp:	08:45:34
Application Type:	Utility under 35 USC 111(a)

Payment information:

Submitted with Payment	no

File Listing:

Document Number	Document Description	File Name	File Size(Bytes)/ Message Digest	Multi Part /.zip	Pages (if appl.)
1		BP4880_Resp_to_Final_OA_03182009.pdf	22237 35a66ed9cbd44d054cf81bebfd335a7368fed388	yes	5

ZTE, Exhibit 1002-0130

	Multipart Description/PDF files in .zip description		
	Document Description	**Start**	**End**
	Amendment After Final	1	1
	Applicant Arguments/Remarks Made in an Amendment	2	5
Warnings:			
Information:			
	Total Files Size (in bytes):	22237	

This Acknowledgement Receipt evidences receipt on the noted date by the USPTO of the indicated documents, characterized by the applicant, and including page counts, where applicable. It serves as evidence of receipt similar to a Post Card, as described in MPEP 503.

New Applications Under 35 U.S.C. 111
If a new application is being filed and the application includes the necessary components for a filing date (see 37 CFR 1.53(b)-(d) and MPEP 506), a Filing Receipt (37 CFR 1.54) will be issued in due course and the date shown on this Acknowledgement Receipt will establish the filing date of the application.

National Stage of an International Application under 35 U.S.C. 371
If a timely submission to enter the national stage of an international application is compliant with the conditions of 35 U.S.C. 371 and other applicable requirements a Form PCT/DO/EO/903 indicating acceptance of the application as a national stage submission under 35 U.S.C. 371 will be issued in addition to the Filing Receipt, in due course.

New International Application Filed with the USPTO as a Receiving Office
If a new international application is being filed and the international application includes the necessary components for an international filing date (see PCT Article 11 and MPEP 1810), a Notification of the International Application Number and of the International Filing Date (Form PCT/RO/105) will be issued in due course, subject to prescriptions concerning national security, and the date shown on this Acknowledgement Receipt will establish the international filing date of the application.

PTO/SB/06 (07-06)
Approved for use through 1/31/2007. OMB 0651-0032
U.S. Patent and Trademark Office; U.S. DEPARTMENT OF COMMERCE
Under the Paperwork Reduction Act of 1995, no persons are required to respond to a collection of information unless it displays a valid OMB control number.

PATENT APPLICATION FEE DETERMINATION RECORD Substitute for Form PTO-875	Application or Docket Number 11/237,341	Filing Date 09/28/2005	☐ To be Mailed

APPLICATION AS FILED – PART I

	(Column 1)	(Column 2)	SMALL ENTITY ☐		OR	OTHER THAN SMALL ENTITY	
FOR	NUMBER FILED	NUMBER EXTRA	RATE ($)	FEE ($)		RATE ($)	FEE ($)
☐ BASIC FEE (37 CFR 1.16(a), (b), or (c))	N/A	N/A	N/A			N/A	
☐ SEARCH FEE (37 CFR 1.16(k), (i), or (m))	N/A	N/A	N/A			N/A	
☐ EXAMINATION FEE (37 CFR 1.16(o), (p), or (q))	N/A	N/A	N/A			N/A	
TOTAL CLAIMS (37 CFR 1.16(i))	minus 20 =	*	X $ =		OR	X $ =	
INDEPENDENT CLAIMS (37 CFR 1.16(h))	minus 3 =	*	X $ =			X $ =	
☐ APPLICATION SIZE FEE (37 CFR 1.16(s))	If the specification and drawings exceed 100 sheets of paper, the application size fee due is $250 ($125 for small entity) for each additional 50 sheets or fraction thereof. See 35 U.S.C. 41(a)(1)(G) and 37 CFR 1.16(s).						
☐ MULTIPLE DEPENDENT CLAIM PRESENT (37 CFR 1.16(j))							
* If the difference in column 1 is less than zero, enter "0" in column 2.			TOTAL			TOTAL	

APPLICATION AS AMENDED – PART II

		(Column 1)		(Column 2)	(Column 3)	SMALL ENTITY		OR	OTHER THAN SMALL ENTITY	
	03/18/2009	CLAIMS REMAINING AFTER AMENDMENT		HIGHEST NUMBER PREVIOUSLY PAID FOR	PRESENT EXTRA	RATE ($)	ADDITIONAL FEE ($)		RATE ($)	ADDITIONAL FEE ($)
AMENDMENT	Total (37 CFR 1.16(i))	* 20	Minus	** 20	= 0	X $ =		OR	X $52=	0
	Independent (37 CFR 1.16(h))	* 3	Minus	***3	= 0	X $ =		OR	X $220=	0
	☐ Application Size Fee (37 CFR 1.16(s))									
	☐ FIRST PRESENTATION OF MULTIPLE DEPENDENT CLAIM (37 CFR 1.16(j))							OR		
						TOTAL ADD'L FEE		OR	TOTAL ADD'L FEE	0

		(Column 1)		(Column 2)	(Column 3)					
		CLAIMS REMAINING AFTER AMENDMENT		HIGHEST NUMBER PREVIOUSLY PAID FOR	PRESENT EXTRA	RATE ($)	ADDITIONAL FEE ($)		RATE ($)	ADDITIONAL FEE ($)
AMENDMENT	Total (37 CFR 1.16(i))	*	Minus	**	=	X $ =		OR	X $ =	
	Independent (37 CFR 1.16(h))	*	Minus	***	=	X $ =		OR	X $ =	
	☐ Application Size Fee (37 CFR 1.16(s))									
	☐ FIRST PRESENTATION OF MULTIPLE DEPENDENT CLAIM (37 CFR 1.16(j))							OR		
						TOTAL ADD'L FEE		OR	TOTAL ADD'L FEE	

* If the entry in column 1 is less than the entry in column 2, write "0" in column 3.
** If the "Highest Number Previously Paid For" IN THIS SPACE is less than 20, enter "20".
*** If the "Highest Number Previously Paid For" IN THIS SPACE is less than 3, enter "3".
The "Highest Number Previously Paid For" (Total or Independent) is the highest number found in the appropriate box in column 1.

Legal Instrument Examiner:
/DEBRA a. SAVOY/

This collection of information is required by 37 CFR 1.16. The information is required to obtain or retain a benefit by the public which is to file (and by the USPTO to process) an application. Confidentiality is governed by 35 U.S.C. 122 and 37 CFR 1.14. This collection is estimated to take 12 minutes to complete, including gathering, preparing, and submitting the completed application form to the USPTO. Time will vary depending upon the individual case. Any comments on the amount of time you require to complete this form and/or suggestions for reducing this burden, should be sent to the Chief Information Officer, U.S. Patent and Trademark Office, U.S. Department of Commerce, P.O. Box 1450, Alexandria, VA 22313-1450. DO NOT SEND FEES OR COMPLETED FORMS TO THIS ADDRESS. **SEND TO: Commissioner for Patents, P.O. Box 1450, Alexandria, VA 22313-1450.**
If you need assistance in completing the form, call 1-800-PTO-9199 and select option 2.

UNITED STATES PATENT AND TRADEMARK OFFICE

UNITED STATES DEPARTMENT OF COMMERCE
United States Patent and Trademark Office
Address: COMMISSIONER FOR PATENTS
P.O. Box 1450
Alexandria, Virginia 22313-1450
www.uspto.gov

APPLICATION NO.	FILING DATE	FIRST NAMED INVENTOR	ATTORNEY DOCKET NO.	CONFIRMATION NO.
11/237,341	09/28/2005	Carlos Aldana	BP4880	6712

51472 7590 01/23/2009
GARLICK HARRISON & MARKISON
P.O. BOX 160727
AUSTIN, TX 78716-0727

EXAMINER	
NEFF, MICHAEL R	
ART UNIT	PAPER NUMBER
2611	

MAIL DATE	DELIVERY MODE
01/23/2009	PAPER

Please find below and/or attached an Office communication concerning this application or proceeding.

The time period for reply, if any, is set in the attached communication.

ZTE, Exhibit 1002-0133

Office Action Summary	Application No.	Applicant(s)	
	11/237,341	ALDANA ET AL.	
	Examiner	Art Unit	
	MICHAEL R. NEFF	2611	

-- The MAILING DATE of this communication appears on the cover sheet with the correspondence address --

Period for Reply

A SHORTENED STATUTORY PERIOD FOR REPLY IS SET TO EXPIRE 3 MONTH(S) OR THIRTY (30) DAYS, WHICHEVER IS LONGER, FROM THE MAILING DATE OF THIS COMMUNICATION.

- Extensions of time may be available under the provisions of 37 CFR 1.136(a). In no event, however, may a reply be timely filed after SIX (6) MONTHS from the mailing date of this communication.
- If NO period for reply is specified above, the maximum statutory period will apply and will expire SIX (6) MONTHS from the mailing date of this communication.
- Failure to reply within the set or extended period for reply will, by statute, cause the application to become ABANDONED (35 U.S.C. § 133). Any reply received by the Office later than three months after the mailing date of this communication, even if timely filed, may reduce any earned patent term adjustment. See 37 CFR 1.704(b).

Status

1)☒ Responsive to communication(s) filed on *05 November 2008*.

2a)☒ This action is **FINAL**. 2b)☐ This action is non-final.

3)☐ Since this application is in condition for allowance except for formal matters, prosecution as to the merits is closed in accordance with the practice under *Ex parte Quayle*, 1935 C.D. 11, 453 O.G. 213.

Disposition of Claims

4)☒ Claim(s) *1-20* is/are pending in the application.

4a) Of the above claim(s) _____ is/are withdrawn from consideration.

5)☐ Claim(s) _____ is/are allowed.

6)☒ Claim(s) *1-20* is/are rejected.

7)☐ Claim(s) _____ is/are objected to.

8)☐ Claim(s) _____ are subject to restriction and/or election requirement.

Application Papers

9)☐ The specification is objected to by the Examiner.

10)☐ The drawing(s) filed on _____ is/are: a)☐ accepted or b)☐ objected to by the Examiner.

Applicant may not request that any objection to the drawing(s) be held in abeyance. See 37 CFR 1.85(a).

Replacement drawing sheet(s) including the correction is required if the drawing(s) is objected to. See 37 CFR 1.121(d).

11)☐ The oath or declaration is objected to by the Examiner. Note the attached Office Action or form PTO-152.

Priority under 35 U.S.C. § 119

12)☐ Acknowledgment is made of a claim for foreign priority under 35 U.S.C. § 119(a)-(d) or (f).

a)☐ All b)☐ Some * c)☐ None of:

1.☐ Certified copies of the priority documents have been received.

2.☐ Certified copies of the priority documents have been received in Application No. _____.

3.☐ Copies of the certified copies of the priority documents have been received in this National Stage application from the International Bureau (PCT Rule 17.2(a)).

* See the attached detailed Office action for a list of the certified copies not received.

Attachment(s)

1) ☐ Notice of References Cited (PTO-892)
2) ☐ Notice of Draftsperson's Patent Drawing Review (PTO-948)
3) ☐ Information Disclosure Statement(s) (PTO/SB/08) Paper No(s)/Mail Date _____.
4) ☐ Interview Summary (PTO-413) Paper No(s)/Mail Date. _____ .
5) ☐ Notice of Informal Patent Application
6) ☐ Other: _____.

ZTE, Exhibit 1002-0134

DETAILED ACTION

Response to Arguments

1. Applicant's arguments filed 11/05/2008 have been fully considered but they are not persuasive. The examiner thoroughly reviewed the applicant's arguments but firmly believes that the cited reference reasonably and properly meets the claimed limitation as rejected.

Applicant's argument: "Although Kim et al. does discuss diagonalizing the channel response matrix through singular value decomposition (see, paragraph [0009]), Kim et al. does not teach or suggest any mechanism for decomposing "the estimated transmitter beamforming unitary matrix (V)," as is claimed in the present invention. As such, Kim et al. also does not teach or suggest any mechanism for "producing the transmitter beamforming information" from the decomposed, estimated transmitter beamforming unitary matrix (v)."

Examiner's response: Applicant's arguments fail to comply with 37 CFR 1.111(b) because they amount to a general allegation that the claims define a patentable invention without specifically pointing out how the language of the claims patentably distinguishes them from the references. Regarding the applicant's assertion that the cited prior art fails to disclose the above stated limitations the Examiner respectfully disagrees. Through the originally cited areas of the Kim disclosure, and although the disclosure does not explicitly state 'beamforming', the Examiner interprets the decomposition means as pointed out in paragraph 0009 and further cited areas which provide for the determination of

feedback information which directly effects the functionality of the transmitter antenna array properties to fully encompass the claimed limitations as currently stated. Therefore the Examiner respectfully maintains the grounds of rejection as previously provided.

Claim Rejections - 35 USC § 103

2. The text of those sections of Title 35, U.S. Code not included in this action can be found in a prior Office action.

3. **Claims 1, 3, 4, 7, 8, 9, 11, 12, 17 and 18 are rejected under 35 U.S.C. 103(a) as being unpatentable over Kim et al. (herein after Kim) (US Publication 2002/0187753 A1) in view of Hwang et al. (herein after Hwang) (US 2004/0042558 A1).**

Re Claims 1 and 17; Kim discloses a method for feeding back transmitter beamforming information from a receiving wireless communication device to a transmitting wireless communication device, the method comprising: the receiving wireless device determining an estimated transmitter beamforming unitary matrix (V) based upon the channel response and a receiver beamforming matrix (U) (Paragraphs 0007, 0009, 0017, 0019, 0065); the receiving wireless device decomposing the estimated transmitter beamforming unitary matrix (V) to produce the transmitter beamforming information (Paragraphs 0009, 0017, 0019 0065); and the receiving wireless device wirelessly sending the transmitter beamforming information to the transmitting wireless device (Abstract; Figure 4; Paragraph 0009, 0017, 0019, 0024);

however Kim does not explicitly disclose wherein (1) the receiving wireless communication device receiving a preamble sequence from the transmitting wireless device; the receiving wireless device estimating a channel response based upon the preamble sequence; or (2) wherein the receiver beamforming matrix (U) is unitary.

However regarding item (1); Kim does disclose the detection and use of the pilot signal to determine channel response values; providing the following disclosures for the limitations of mention: the receiving wireless communication device receiving a preamble sequence from the transmitting wireless device (Abstract; Figure 4; Paragraphs 0017, 0019, 0024); the receiving wireless device estimating a channel response based upon the preamble sequence (Figure 4; Paragraph 0017, 0019).

Therefore it would have been obvious to one of ordinary skill in the art at the time the invention was made that the pilot and preamble signals would provide functionally equivalent results for the processing of the channel response.

Regarding item (2); Hwang discloses a beamforming device wherein the receiver and transmitter beamforming matrices are unitary and derived from a channel response value (Paragraphs 0027-0029).

Therefore it would have been obvious to one of ordinary skill in the art at the time the invention was made that the use of unitary matrices for both the transmitter and receiver beamforming matrices as disclosed by Hwang, while not explicitly disclosed by Kim; is a common and well known practice for the derivation of beamforming matrices through the decomposition of the channel response values for a given system.

Re Claim 9; Kim discloses a wireless communication device comprising: a plurality of Radio Frequency (RF) components operable to receive an RF signal and to convert the RF signal to a baseband signal (Paragraph 0019); and a baseband processing module operable to: determine an estimated transmitter beamforming unitary matrix (V) based upon the channel response and a receiver beamforming matrix (U) (Paragraphs 0007, 0009, 0017, 0019, 0065); decompose the estimated transmitter beamforming unitary matrix (V) to produce the transmitter beamforming information(Paragraphs 0009, 0017, 0019, 0065); and form a baseband signal employed by the plurality of RF components to wirelessly send the transmitter beamforming information to the transmitting wireless device (0017-0019); however Kim does not explicitly disclose receiving a preamble sequence carried by the baseband signal; estimate a channel response based upon the preamble sequence; or (2) wherein the receiver beamforming matrix (U) is unitary.

However regarding item (1); Kim does disclose the detection and use of the pilot signal to determine channel response values; providing the following disclosures for the limitations of mention: receiving a preamble sequence carried by the baseband signal; (Abstract; Figure 4; Paragraphs 0017, 0019, 0024); estimate a channel response based upon the preamble sequence (Figure 4; Paragraph 0017, 0019).

Therefore it would have been obvious to one of ordinary skill in the art at the time the invention was made that the pilot and preamble signals would provide functionally equivalent results for the processing of the channel response.

Regarding item (2); Hwang discloses a beamforming device wherein the receiver and transmitter beamforming matrices are unitary and derived from a channel response value (Paragraphs 0027-0029).

Therefore it would have been obvious to one of ordinary skill in the art at the time the invention was made that the use of unitary matrices for both the transmitter and receiver beamforming matrices as disclosed by Hwang, while not explicitly disclosed by Kim; is a common and well known practice for the derivation of beamforming matrices through the decomposition of the channel response values for a given system.

Re Claims 3 and 11; the combined disclosures of Kim and Hwang disclose the method of claims 1 and 9; Hwang further discloses wherein the channel response (H), estimated transmitter beamforming unitary matrix (V), and the receiver beamforming unitary matrix (U) are related by the equation: H = UDV* where, D is a diagonal matrix (Paragraphs 00247-0029).

Re Claims 4, 12 and 18; the combined disclosures of Kim and Hwang disclose the method of claims 3, 9 and 17; Hwang further discloses wherein the receiving wireless device determining an estimated transmitter beamforming unitary matrix (V) based upon the channel response and a receiver beamforming unitary matrix (U) comprises performing a Singular Value Decomposition (SVD) operation (0027-0029).

Re claim 7; the combined disclosures of Kim and Hwang disclose the method of claim 1; Kim further discloses wherein: the transmitting wireless device transmits on N antennas (48; 72); and the receiving wireless device receives on M antennas (60; 40).

Re claim 8; the combined disclosures of Kim and Hwang disclose the method of claim 1; Kim further discloses wherein at least one of the transmitting wireless device and the receiving wireless device supports Multiple Input Multiple Output (MIMO) operations (Figure 1; 48, 60).

4. **Claims 5, 6, 13, 14, 19 and 20 are rejected under 35 U.S.C. 103(a) as being unpatentable over Kim and Hwang as applied to claims 1, 13 and 19; and further in view of Ma et al. (herein after Ma) (US Publication "A unified algebraic transformation approach for parallel recursive and adaptive filtering and SVD algorithms", IEEE 2001).**

Re Claims 5 and 13; the combined disclosures of Kim and Hwang disclose the method of claims 1 and 9; but fail however to explicitly disclose wherein the receiving wireless device decomposing the estimated transmitter beamforming unitary matrix (V) to produce the transmitter beamforming information comprises the receiving wireless device decomposing the estimated transmitter beamforming unitary matrix (V) using a QR decomposition technique.

This decomposition technique is however disclosed by Ha. Ha discloses a means of QR matrix decomposition (Abstract; Section V and Section VI).

Therefore it would have been obvious to one of ordinary skill in the art at the time the invention was made the use of a QR decomposition technique as disclosed by Ha in order to gain the added benefit of decomposing the transmitter information to a vector format therefore reducing the total bandwidth used for the feed backing of information as disclosed by Kim for beamforming adjustments in the transmitter.

Re claims 6 and 14; the combined disclosures of Kim, Hwang, and Ha disclose the method of claims 5 and 13; Ha further discloses means of utilizing a QR decomposition comprising a Givens Rotation in a matrix decomposition utilizing an SVD decomposition algorithm (Section V and Section VI). The Examiner interprets this disclosure as fully encompassing the scope of the claimed limitations within the claims as mentioned above, wherein the disclosure describes a functionally equivalent process to that of the current application only suffering deficiencies to design choices made within the current application but still utilizing the basis of the prior arts disclosure towards the decomposition algorithms.

Re Claims 19 and 20; the combined disclosures of Kim and Hwang disclose the method of claim 17; but fail however to explicitly disclose wherein utilizing a QR decomposition comprising a Givens Rotation and the equation as claimed in the current application; and wherein the transmitter beamforming information comprises element values of the diagonal matrix D and element values of the Givens Rotation matrix as recited in claim 20.

However; Ha discloses means of utilizing a QR decomposition comprising a Givens Rotation in a matrix decomposition utilizing an SVD decomposition algorithm (Abstract; Section II, Section V and Section VI). The Examiner interprets this disclosure as fully encompassing the scope of the claimed limitations within the claims as mentioned above, wherein the disclosure describes a functionally equivalent process to that of the current application only suffering deficiencies to design choices made within the current application but still utilizing the basis of the prior arts disclosure towards the decomposition algorithms.

Therefore it would have been obvious to one of ordinary skill in the art at the time the invention was made the use of a QR decomposition technique as disclosed by Ha in order to gain the added benefit of decomposing the transmitter information to a vector format therefore reducing the total bandwidth used for the feed backing of information as disclosed by Kim for beamforming adjustments in the transmitter.

5. **Claims 2, 10, 15 and 16 are rejected under 35 U.S.C. 103(a) as being unpatentable over Kim and Hwang et as applied to claims 1 and 9; and further in view of Reinhardt (US Patent 5,541,607).**

Re Claims 2 and 10; the combined disclosures of Kim and Hwang disclose the method of claims 1 and 9; but fail however to explicitly disclose wherein the receiving wireless device determining an estimated transmitter beamforming unitary matrix (V) based upon the channel response and a receiver beamforming unitary matrix (U) comprises: the receiving wireless device producing the estimated transmitter beamforming unitary matrix (V) in Cartesian coordinates; and the receiving wireless

device converting the estimated transmitter beamforming unitary matrix (V) to polar coordinates.

This method is however disclosed by Reinhardt. Reinhardt discloses a method of converting parameters from Cartesian to polar coordinates which are further utilized for transmitter beamforming (Figures 3 and 6; 78, 98; Col. 3 line 65-Col. 4 line 5; Col. 6 line 66- Col. 7 line 7).

Therefore it would have been obvious to one of ordinary skill in the art at the time the invention was made to incorporate the use of polar coordinates in the beamforming process as disclosed by Reinhardt within the beamforming system of Poon in order to gain the benefit increasing the system efficiency for a plurality of beams by replacing the power and bandwidth consuming rectangular coordinates.

Re claim 15; the combined disclosures of Kim, Hwang and Reinhardt disclose the method of claim 10; Kim further discloses wherein: the transmitting wireless device transmits on N antennas (48; 72); and the receiving wireless device receives on M antennas (60; 40).

Re claim 16; the combined disclosures of Kim, Hwang and Reinhardt disclose the method of claim 10; Kim further discloses wherein at least one of the transmitting wireless device and the receiving wireless device supports Multiple Input Multiple Output (MIMO) operations (Figure 1; 48, 60).

Conclusion

6. **THIS ACTION IS MADE FINAL.** Applicant is reminded of the extension of time policy as set forth in 37 CFR 1.136(a).

A shortened statutory period for reply to this final action is set to expire THREE MONTHS from the mailing date of this action. In the event a first reply is filed within TWO MONTHS of the mailing date of this final action and the advisory action is not mailed until after the end of the THREE-MONTH shortened statutory period, then the shortened statutory period will expire on the date the advisory action is mailed, and any extension fee pursuant to 37 CFR 1.136(a) will be calculated from the mailing date of the advisory action. In no event, however, will the statutory period for reply expire later than SIX MONTHS from the mailing date of this final action.

Any inquiry concerning this communication or earlier communications from the examiner should be directed to MICHAEL R. NEFF whose telephone number is (571)270-1848. The examiner can normally be reached on Monday - Friday 8:00am - 4:30pm EST ALT Fridays.

If attempts to reach the examiner by telephone are unsuccessful, the examiner's supervisor, Shuwang Liu can be reached on (571)272-3036. The fax phone number for the organization where this application or proceeding is assigned is 571-273-8300.

Information regarding the status of an application may be obtained from the Patent Application Information Retrieval (PAIR) system. Status information for published applications may be obtained from either Private PAIR or Public PAIR. Status information for unpublished applications is available through Private PAIR only. For more information about the PAIR system, see http://pair-direct.uspto.gov. Should you have questions on access to the Private PAIR system, contact the Electronic Business Center (EBC) at 866-217-9197 (toll-free). If you would like assistance from a USPTO Customer Service Representative or access to the automated information system, call 800-786-9199 (IN USA OR CANADA) or 571-272-1000.

/MICHAEL R. NEFF/
Examiner, Art Unit 2611
/Shuwang Liu/
Supervisory Patent Examiner, Art Unit 2611

Index of Claims	Application/Control No.	Applicant(s)/Patent Under Reexamination
	11237341	ALDANA ET AL.
	Examiner	Art Unit
	MICHAEL R NEFF	2611

✓	Rejected	-	Cancelled	N	Non-Elected	A	Appeal
=	Allowed	÷	Restricted	I	Interference	O	Objected

☐ Claims renumbered in the same order as presented by applicant ☐ CPA ☐ T.D. ☐ R.1.47

CLAIM		DATE								
Final	Original	07/25/2008	01/07/2009							
	1	✓	✓							
	2	✓	✓							
	3	✓	✓							
	4	✓	✓							
	5	✓	✓							
	6	✓	✓							
	7	✓	✓							
	8	✓	✓							
	9	✓	✓							
	10	✓	✓							
	11	✓	✓							
	12	✓	✓							
	13	✓	✓							
	14	✓	✓							
	15	✓	✓							
	16	✓	✓							
	17	✓	✓							
	18	✓	✓							
	19	✓	✓							
	20	✓	✓							

ZTE, Exhibit 1002-0146

Search Notes	Application/Control No.	Applicant(s)/Patent Under Reexamination
	11237341	ALDANA ET AL.
	Examiner	**Art Unit**
	MICHAEL R NEFF	2611

SEARCHED			
Class	**Subclass**	**Date**	**Examiner**
375	267	7/24/2008	MRN

SEARCH NOTES		
Search Notes	**Date**	**Examiner**
Class / Subclass search performed with keyword limitations	7/24/2008	MRN
Inventor / Double patenting search performed in EAST database	7/24/2008	MRN
prior art evaluated in light of applicants arguments	1/7/2009	MRN

INTERFERENCE SEARCH			
Class	**Subclass**	**Date**	**Examiner**

/MICHAEL R NEFF/ Examiner.Art Unit 2611	

ZTE, Exhibit 1002-0147

DOCKET NO. BP4880

Customer No. 51,472

IN THE UNITED STATES PATENT AND TRADEMARK OFFICE

In re Application of:	Carlos Aldana	Conf. No.: 6712
Serial No.	11/237,341	
Filed:	September 28, 2005	
For:	Efficient Feedback of Channel Information in a Closed Loop Beamforming Wireless Communication System	
Art Unit.:	2611	
Examiner:	Michael R. Neff	

Mail Stop Amendment
Commissioner for Patents
P.O. Box 1450
Alexandria, VA 22313-1450

RESPONSE TO OFFICIAL ACTION UNDER 37 C.F.R. § 1.111

Sir:

Applicant hereby submits this Response to the Official Action having a mailed date of August 5, 2008, and makes the following arguments and remarks in response thereto. As such, reconsideration of the action and allowance of the present application are respectfully requested and are believed to be appropriate in view of the following:

Amendments to the Specification – N/A;

Amendments to the Claims – N/A;

Amendments to the Drawings – N/A; and

Remarks beginning on page **2** of this paper.

ZTE, Exhibit 1002-0148

REMARKS/ARGUMENTS

Claims 1-20 remain pending in the present application. No claims have been amended. Applicant respectfully requests favorable reconsideration of the claims in view of the following remarks.

Claims 1, 3, 4, 7, 8, 9, 11, 12, 17 and 18 were rejected under 35 U.S.C. § 103(a) as being unpatentable over Kim et al. (US Patent Application Publication No. 2002/0187753) in view of Hwang et al. (U.S. Patent Application Publication No. 2004/0042558).

Claim 1 recites: "*the receiving wireless device decomposing the estimated transmitter beamforming unitary matrix (V) to produce the transmitter beamforming information*." Applicant notes that similar recitations can be found in independent Claims 9 and 17. Applicant respectfully submits that the above-quoted feature is not taught or suggested by the combination of Kim et al. and Hwang et al.

Although Kim et al. does discuss diagonalizing the channel response matrix through singular value decomposition (*see, paragraph [0009]*), Kim et al. does not teach or suggest any mechanism for decomposing "the estimated transmitter beamforming unitary matrix (V)," as is claimed in the present invention. As such, Kim et al. also does not teach or suggest any mechanism for "producing the transmitter beamforming information" from the decomposed, estimated transmitter beamforming unitary matrix (V).

In view of the foregoing discussion, Applicant respectfully submits that the combination of Kim et al. and Hwang et al. does not teach or suggest each and every element of independent Claims 1, 9 and 17 (and their dependent claims) arranged as they are in the claims. Accordingly, Applicant respectfully requests that the Examiner withdraw the § 103(a) rejections of Claims 1, 3, 4, 7, 8, 9, 11, 12, 17 and 18.

Claims 5, 6, 13, 14, 19 and 20 were rejected under 35 U.S.C. § 103(a) as being unpatentable over Kim et al. and Hwang et al. in view of Ma et al. (US Publication "A unified algebraic transformation approach for parallel recursive and adaptive filtering and SVD algorithms", IEEE 2001). In addition, Claims 2, 10, 15 and 16 were rejected under 35 U.S.C. § 103(a) as being unpatentable over Kim et al. and Hwang et al. in view of Reinhardt (U.S. Patent No. 5,541,607).

ZTE, Exhibit 1002-0149

The aforementioned Claims 2, 5, 6, 10, 13-16, 19 and 20 are dependent upon claims that Applicant believes are now allowable. Therefore, for at least the same reasons given above with respect to the rejections of Claims 1, 9 and 17, Applicant respectfully submits that Claims 2, 5, 6, 10, 13-16, 19 and 20 are not obvious over the prior art of record. Accordingly, Applicant respectfully requests that the Examiner withdraw the § 103 rejection of Claims 2, 5, 6, 10, 13-16, 19 and 20.

CONCLUSION

As a result of the foregoing, the Applicant asserts that the remaining Claims in the Application are in condition for allowance, and respectfully requests an early allowance of such Claims.

The Commissioner is hereby authorized to charge any additional fees connected with this communication or credit any overpayment to Garlick Harrison & Markison Deposit Account No. 50-2126 (Ref. BP4880).

Respectfully submitted,

Date: November 5, 2008

/Holly L. Rudnick/Reg. No. 43,065
Holly L. Rudnick
Attorney for Applicant

Garlick Harrison & Markison
P.O. Box 160727
Austin, TX 78716-0727
(214) 387-8097/office
(214) 387-7949/facsimile

ZTE, Exhibit 1002-0150

Electronic Acknowledgement Receipt

EFS ID:	4240305
Application Number:	11237341
International Application Number:	
Confirmation Number:	6712
Title of Invention:	Efficient feedback of channel information in a closed loop beamforming wireless communication system
First Named Inventor/Applicant Name:	Carlos Aldana
Customer Number:	51472
Filer:	Holly L. Rudnick/Sherry Wolf McWhinnie
Filer Authorized By:	Holly L. Rudnick
Attorney Docket Number:	BP4880
Receipt Date:	05-NOV-2008
Filing Date:	28-SEP-2005
Time Stamp:	20:21:08
Application Type:	Utility under 35 USC 111(a)

Payment information:

Submitted with Payment	no

File Listing:

Document Number	Document Description	File Name	File Size(Bytes)/ Message Digest	Multi Part /.zip	Pages (if appl.)
1		BP4880_Resp_to_NonFinal_OA_11052008.pdf	95202 845488aac319949ccdb3c38a124d9a3caf955cc9	yes	3

	Multipart Description/PDF files in .zip description		
	Document Description	**Start**	**End**
	Amendment/Req. Reconsideration-After Non-Final Reject	1	1
	Applicant Arguments/Remarks Made in an Amendment	2	3
Warnings:			
Information:			
	Total Files Size (in bytes):	95202	

This Acknowledgement Receipt evidences receipt on the noted date by the USPTO of the indicated documents, characterized by the applicant, and including page counts, where applicable. It serves as evidence of receipt similar to a Post Card, as described in MPEP 503.

New Applications Under 35 U.S.C. 111
If a new application is being filed and the application includes the necessary components for a filing date (see 37 CFR 1.53(b)-(d) and MPEP 506), a Filing Receipt (37 CFR 1.54) will be issued in due course and the date shown on this Acknowledgement Receipt will establish the filing date of the application.

National Stage of an International Application under 35 U.S.C. 371
If a timely submission to enter the national stage of an international application is compliant with the conditions of 35 U.S.C. 371 and other applicable requirements a Form PCT/DO/EO/903 indicating acceptance of the application as a national stage submission under 35 U.S.C. 371 will be issued in addition to the Filing Receipt, in due course.

New International Application Filed with the USPTO as a Receiving Office
If a new international application is being filed and the international application includes the necessary components for an international filing date (see PCT Article 11 and MPEP 1810), a Notification of the International Application Number and of the International Filing Date (Form PCT/RO/105) will be issued in due course, subject to prescriptions concerning national security, and the date shown on this Acknowledgement Receipt will establish the international filing date of the application.

UNITED STATES PATENT AND TRADEMARK OFFICE

UNITED STATES DEPARTMENT OF COMMERCE
United States Patent and Trademark Office
Address: COMMISSIONER FOR PATENTS
P.O. Box 1450
Alexandria, Virginia 22313-1450
www.uspto.gov

APPLICATION NO.	FILING DATE	FIRST NAMED INVENTOR	ATTORNEY DOCKET NO.	CONFIRMATION NO.
11/237,341	09/28/2005	Carlos Aldana	BP4880	6712

51472 7590 08/05/2008
GARLICK HARRISON & MARKISON
P.O. BOX 160727
AUSTIN, TX 78716-0727

EXAMINER	
NEFF, MICHAEL R	
ART UNIT	PAPER NUMBER
2611	

MAIL DATE	DELIVERY MODE
08/05/2008	PAPER

Please find below and/or attached an Office communication concerning this application or proceeding.

The time period for reply, if any, is set in the attached communication.

ZTE, Exhibit 1002-0153

Office Action Summary	Application No.	Applicant(s)	
	11/237,341	ALDANA ET AL.	
	Examiner	Art Unit	
	MICHAEL R. NEFF	2611	

-- The MAILING DATE of this communication appears on the cover sheet with the correspondence address --

Period for Reply

A SHORTENED STATUTORY PERIOD FOR REPLY IS SET TO EXPIRE 3 MONTH(S) OR THIRTY (30) DAYS, WHICHEVER IS LONGER, FROM THE MAILING DATE OF THIS COMMUNICATION.

- Extensions of time may be available under the provisions of 37 CFR 1.136(a). In no event, however, may a reply be timely filed after SIX (6) MONTHS from the mailing date of this communication.
- If NO period for reply is specified above, the maximum statutory period will apply and will expire SIX (6) MONTHS from the mailing date of this communication.
- Failure to reply within the set or extended period for reply will, by statute, cause the application to become ABANDONED (35 U.S.C. § 133). Any reply received by the Office later than three months after the mailing date of this communication, even if timely filed, may reduce any earned patent term adjustment. See 37 CFR 1.704(b).

Status

1)☒ Responsive to communication(s) filed on *28 September 2005*.

2a)☐ This action is **FINAL**. 2b)☒ This action is non-final.

3)☐ Since this application is in condition for allowance except for formal matters, prosecution as to the merits is closed in accordance with the practice under *Ex parte Quayle*, 1935 C.D. 11, 453 O.G. 213.

Disposition of Claims

4)☒ Claim(s) *1-20* is/are pending in the application.

4a) Of the above claim(s) _____ is/are withdrawn from consideration.

5)☐ Claim(s) _____ is/are allowed.

6)☒ Claim(s) *1-20* is/are rejected.

7)☐ Claim(s) _____ is/are objected to.

8)☐ Claim(s) _____ are subject to restriction and/or election requirement.

Application Papers

9)☐ The specification is objected to by the Examiner.

10)☒ The drawing(s) filed on *28 September 2005* is/are: a)☒ accepted or b)☐ objected to by the Examiner.

Applicant may not request that any objection to the drawing(s) be held in abeyance. See 37 CFR 1.85(a).

Replacement drawing sheet(s) including the correction is required if the drawing(s) is objected to. See 37 CFR 1.121(d).

11)☐ The oath or declaration is objected to by the Examiner. Note the attached Office Action or form PTO-152.

Priority under 35 U.S.C. § 119

12)☐ Acknowledgment is made of a claim for foreign priority under 35 U.S.C. § 119(a)-(d) or (f).

a)☐ All b)☐ Some * c)☐ None of:

1.☐ Certified copies of the priority documents have been received.

2.☐ Certified copies of the priority documents have been received in Application No. _____.

3.☐ Copies of the certified copies of the priority documents have been received in this National Stage application from the International Bureau (PCT Rule 17.2(a)).

* See the attached detailed Office action for a list of the certified copies not received.

Attachment(s)

1) ☒ Notice of References Cited (PTO-892)
2) ☐ Notice of Draftsperson's Patent Drawing Review (PTO-948)
3) ☐ Information Disclosure Statement(s) (PTO/SB/08) Paper No(s)/Mail Date _____.
4) ☐ Interview Summary (PTO-413) Paper No(s)/Mail Date. _____ .
5) ☐ Notice of Informal Patent Application
6) ☐ Other: _____.

ZTE, Exhibit 1002-0154

DETAILED ACTION

Claim Rejections - 35 USC § 103

1. The following is a quotation of 35 U.S.C. 103(a) which forms the basis for all obviousness rejections set forth in this Office action:

> (a) A patent may not be obtained though the invention is not identically disclosed or described as set forth in section 102 of this title, if the differences between the subject matter sought to be patented and the prior art are such that the subject matter as a whole would have been obvious at the time the invention was made to a person having ordinary skill in the art to which said subject matter pertains. Patentability shall not be negatived by the manner in which the invention was made.

2. The factual inquiries set forth in *Graham* **v.** *John Deere Co.*, 383 U.S. 1, 148 USPQ 459 (1966), that are applied for establishing a background for determining obviousness under 35 U.S.C. 103(a) are summarized as follows:

1. Determining the scope and contents of the prior art.
2. Ascertaining the differences between the prior art and the claims at issue.
3. Resolving the level of ordinary skill in the pertinent art.
4. Considering objective evidence present in the application indicating obviousness or nonobviousness.

3. Claims 1, 3, 4, 7, 8, 9, 11, 12, 17 and 18 are rejected under 35 U.S.C. 103(a) as being unpatentable over Kim et al. (herein after Kim) (US Publication 2002/0187753 A1) in view of Hwang et al. (herein after Hwang) (US 2004/0042558 A1).

Re Claims 1 and 17; Kim discloses a method for feeding back transmitter beamforming information from a receiving wireless communication device to a transmitting wireless communication device, the method comprising: the receiving wireless device determining an estimated transmitter beamforming unitary matrix (V) based upon the channel response and a receiver beamforming matrix (U) (Paragraphs 0007, 0009, 0017, 0019, 0065); the receiving wireless device decomposing the

estimated transmitter beamforming unitary matrix (V) to produce the transmitter beamforming information (Paragraphs 0009, 0017, 0019 0065); and the receiving wireless device wirelessly sending the transmitter beamforming information to the transmitting wireless device (Abstract; Figure 4; Paragraph 0009, 0017, 0019, 0024); however Kim does not explicitly disclose wherein (1) the receiving wireless communication device receiving a preamble sequence from the transmitting wireless device; the receiving wireless device estimating a channel response based upon the preamble sequence; or (2) wherein the receiver beamforming matrix (U) is unitary.

However regarding item (1); Kim does disclose the detection and use of the pilot signal to determine channel response values; providing the following disclosures for the limitations of mention: the receiving wireless communication device receiving a preamble sequence from the transmitting wireless device (Abstract; Figure 4; Paragraphs 0017, 0019, 0024); the receiving wireless device estimating a channel response based upon the preamble sequence (Figure 4; Paragraph 0017, 0019).

Therefore it would have been obvious to one of ordinary skill in the art at the time the invention was made that the pilot and preamble signals would provide functionally equivalent results for the processing of the channel response.

Regarding item (2); Hwang discloses a beamforming device wherein the receiver and transmitter beamforming matrices are unitary and derived from a channel response value (Paragraphs 0027-0029).

Therefore it would have been obvious to one of ordinary skill in the art at the time the invention was made that the use of unitary matrices for both the transmitter and

receiver beamforming matrices as disclosed by Hwang, while not explicitly disclosed by Kim; is a common and well known practice for the derivation of beamforming matrices through the decomposition of the channel response values for a given system.

Re Claim 9; Kim discloses a wireless communication device comprising: a plurality of Radio Frequency (RF) components operable to receive an RF signal and to convert the RF signal to a baseband signal (Paragraph 0019); and a baseband processing module operable to: determine an estimated transmitter beamforming unitary matrix (V) based upon the channel response and a receiver beamforming matrix (U) (Paragraphs 0007, 0009, 0017, 0019, 0065); decompose the estimated transmitter beamforming unitary matrix (V) to produce the transmitter beamforming information(Paragraphs 0009, 0017, 0019, 0065); and form a baseband signal employed by the plurality of RF components to wirelessly send the transmitter beamforming information to the transmitting wireless device (0017-0019); however Kim does not explicitly disclose receiving a preamble sequence carried by the baseband signal; estimate a channel response based upon the preamble sequence; or (2) wherein the receiver beamforming matrix (U) is unitary.

However regarding item (1); Kim does disclose the detection and use of the pilot signal to determine channel response values; providing the following disclosures for the limitations of mention: receiving a preamble sequence carried by the baseband signal; (Abstract; Figure 4; Paragraphs 0017, 0019, 0024); estimate a channel response based upon the preamble sequence (Figure 4; Paragraph 0017, 0019).

Therefore it would have been obvious to one of ordinary skill in the art at the time the invention was made that the pilot and preamble signals would provide functionally equivalent results for the processing of the channel response.

Regarding item (2); Hwang discloses a beamforming device wherein the receiver and transmitter beamforming matrices are unitary and derived from a channel response value (Paragraphs 0027-0029).

Therefore it would have been obvious to one of ordinary skill in the art at the time the invention was made that the use of unitary matrices for both the transmitter and receiver beamforming matrices as disclosed by Hwang, while not explicitly disclosed by Kim; is a common and well known practice for the derivation of beamforming matrices through the decomposition of the channel response values for a given system.

Re Claims 3 and 11; the combined disclosures of Kim and Hwang disclose the method of claims 1 and 9; Hwang further discloses wherein the channel response (H), estimated transmitter beamforming unitary matrix (V), and the receiver beamforming unitary matrix (U) are related by the equation: H = UDV* where, D is a diagonal matrix (Paragraphs 00247-0029).

Re Claims 4, 12 and 18; the combined disclosures of Kim and Hwang disclose the method of claims 3, 9 and 17; Hwang further discloses wherein the receiving wireless device determining an estimated transmitter beamforming unitary matrix (V)

based upon the channel response and a receiver beamforming unitary matrix (U) comprises performing a Singular Value Decomposition (SVD) operation (0027-0029).

Re claim 7; the combined disclosures of Kim and Hwang disclose the method of claim 1; Kim further discloses wherein: the transmitting wireless device transmits on N antennas (48; 72); and the receiving wireless device receives on M antennas (60; 40).

Re claim 8; the combined disclosures of Kim and Hwang disclose the method of claim 1; Kim further discloses wherein at least one of the transmitting wireless device and the receiving wireless device supports Multiple Input Multiple Output (MIMO) operations (Figure 1; 48, 60).

4. **Claims 5, 6, 13, 14, 19 and 20 are rejected under 35 U.S.C. 103(a) as being unpatentable over Kim and Hwang as applied to claims 1, 13 and 19; and further in view of Ma et al. (herein after Ma) (US Publication "A unified algebraic transformation approach for parallel recursive and adaptive filtering and SVD algorithms", IEEE 2001).**

Re Claims 5 and 13; the combined disclosures of Kim and Hwang disclose the method of claims 1 and 9; but fail however to explicitly disclose wherein the receiving wireless device decomposing the estimated transmitter beamforming unitary matrix (V) to produce the transmitter beamforming information comprises the receiving wireless

device decomposing the estimated transmitter beamforming unitary matrix (V) using a QR decomposition technique.

This decomposition technique is however disclosed by Ha. Ha discloses a means of QR matrix decomposition (Abstract; Section V and Section VI).

Therefore it would have been obvious to one of ordinary skill in the art at the time the invention was made the use of a QR decomposition technique as disclosed by Ha in order to gain the added benefit of decomposing the transmitter information to a vector format therefore reducing the total bandwidth used for the feed backing of information as disclosed by Kim for beamforming adjustments in the transmitter.

Re claims 6 and 14; the combined disclosures of Kim, Hwang, and Ha disclose the method of claims 5 and 13; Ha further discloses means of utilizing a QR decomposition comprising a Givens Rotation in a matrix decomposition utilizing an SVD decomposition algorithm (Section V and Section VI). The Examiner interprets this disclosure as fully encompassing the scope of the claimed limitations within the claims as mentioned above, wherein the disclosure describes a functionally equivalent process to that of the current application only suffering deficiencies to design choices made within the current application but still utilizing the basis of the prior arts disclosure towards the decomposition algorithms.

Re Claims 19 and 20; the combined disclosures of Kim and Hwang disclose the method of claim 17; but fail however to explicitly disclose wherein utilizing a QR

decomposition comprising a Givens Rotation and the equation as claimed in the current application; and wherein the transmitter beamforming information comprises element values of the diagonal matrix D and element values of the Givens Rotation matrix as recited in claim 20.

However; Ha discloses means of utilizing a QR decomposition comprising a Givens Rotation in a matrix decomposition utilizing an SVD decomposition algorithm (Abstract; Section II, Section V and Section VI). The Examiner interprets this disclosure as fully encompassing the scope of the claimed limitations within the claims as mentioned above, wherein the disclosure describes a functionally equivalent process to that of the current application only suffering deficiencies to design choices made within the current application but still utilizing the basis of the prior arts disclosure towards the decomposition algorithms.

Therefore it would have been obvious to one of ordinary skill in the art at the time the invention was made the use of a QR decomposition technique as disclosed by Ha in order to gain the added benefit of decomposing the transmitter information to a vector format therefore reducing the total bandwidth used for the feed backing of information as disclosed by Kim for beamforming adjustments in the transmitter.

5. **Claims 2, 10, 15 and 16 are rejected under 35 U.S.C. 103(a) as being unpatentable over Kim and Hwang et as applied to claims 1 and 9; and further in view of Reinhardt (US Patent 5,541,607).**

Re Claims 2 and 10; the combined disclosures of Kim and Hwang disclose the method of claims 1 and 9; but fail however to explicitly disclose wherein the receiving wireless device determining an estimated transmitter beamforming unitary matrix (V) based upon the channel response and a receiver beamforming unitary matrix (U) comprises: the receiving wireless device producing the estimated transmitter beamforming unitary matrix (V) in Cartesian coordinates; and the receiving wireless device converting the estimated transmitter beamforming unitary matrix (V) to polar coordinates.

This method is however disclosed by Reinhardt. Reinhardt discloses a method of converting parameters from Cartesian to polar coordinates which are further utilized for transmitter beamforming (Figures 3 and 6; 78, 98; Col. 3 line 65-Col. 4 line 5; Col. 6 line 66- Col. 7 line 7).

Therefore it would have been obvious to one of ordinary skill in the art at the time the invention was made to incorporate the use of polar coordinates in the beamforming process as disclosed by Reinhardt within the beamforming system of Poon in order to gain the benefit increasing the system efficiency for a plurality of beams by replacing the power and bandwidth consuming rectangular coordinates.

Re claim 15; the combined disclosures of Kim, Hwang and Reinhardt disclose the method of claim 10; Kim further discloses wherein: the transmitting wireless device transmits on N antennas (48; 72); and the receiving wireless device receives on M antennas (60; 40).

Re claim 16; the combined disclosures of Kim, Hwang and Reinhardt disclose the method of claim 10; Kim further discloses wherein at least one of the transmitting wireless device and the receiving wireless device supports Multiple Input Multiple Output (MIMO) operations (Figure 1; 48, 60).

Conclusion

Any inquiry concerning this communication or earlier communications from the examiner should be directed to MICHAEL R. NEFF whose telephone number is (571)270-1848. The examiner can normally be reached on Monday - Friday 8:00am - 4:30pm EST ALT Fridays.

If attempts to reach the examiner by telephone are unsuccessful, the examiner's supervisor, Shuwang Liu can be reached on (571)272-3036. The fax phone number for the organization where this application or proceeding is assigned is 571-273-8300.

Information regarding the status of an application may be obtained from the Patent Application Information Retrieval (PAIR) system. Status information for published applications may be obtained from either Private PAIR or Public PAIR. Status information for unpublished applications is available through Private PAIR only. For more information about the PAIR system, see http://pair-direct.uspto.gov. Should you have questions on access to the Private PAIR system, contact the Electronic Business Center (EBC) at 866-217-9197 (toll-free). If you would like assistance from a USPTO Customer Service Representative or access to the automated information system, call 800-786-9199 (IN USA OR CANADA) or 571-272-1000.

/MICHAEL R. NEFF/
Examiner, Art Unit 2611
/Shuwang Liu/
Supervisory Patent Examiner, Art Unit 2611

Notice of References Cited	Application/Control No. 11/237,341	Applicant(s)/Patent Under Reexamination ALDANA ET AL.	
	Examiner MICHAEL R. NEFF	Art Unit 2611	Page 1 of 1

U.S. PATENT DOCUMENTS

*		Document Number Country Code-Number-Kind Code	Date MM-YYYY	Name	Classification
*	A	US-5,541,607 A	07-1996	Reinhardt, Victor S.	342/372
*	B	US-2002/0187753 A1	12-2002	Kim et al.	455/69
*	C	US-2003/0139196 A1	07-2003	Medvedev et al.	455/522
*	D	US-2004/0042558 A1	03-2004	Hwang et al.	375/267
*	E	US-2005/0286663 A1	12-2005	Poon, Ada S. Y.	375/347
	F	US-			
	G	US-			
	H	US-			
	I	US-			
	J	US-			
	K	US-			
	L	US-			
	M	US-			

FOREIGN PATENT DOCUMENTS

*		Document Number Country Code-Number-Kind Code	Date MM-YYYY	Country	Name	Classification
	N					
	O					
	P					
	Q					
	R					
	S					
	T					

NON-PATENT DOCUMENTS

*		Include as applicable: Author, Title Date, Publisher, Edition or Volume, Pertinent Pages)
	U	A unified algebraic transformation approach for parallel recursive and adaptive filtering and SVD algorithms Jun Ma; Parhi, K.K.; Deprettere, E.F.; Signal Processing, IEEE Transactions on [see also Acoustics, Speech, and Signal Processing, IEEE Transactions on] Volume 49, Issue 2, Feb. 2001 Page(s):424 - 437
	V	
	W	
	X	

*A copy of this reference is not being furnished with this Office action. (See MPEP § 707.05(a).)
Dates in MM-YYYY format are publication dates. Classifications may be US or foreign.

ZTE, Exhibit 1002-0165

Index of Claims	Application/Control No.	Applicant(s)/Patent Under Reexamination
	11237341	ALDANA ET AL.
	Examiner	Art Unit
	MICHAEL R NEFF	2611

✓	Rejected	-	Cancelled	N	Non-Elected	A	Appeal
=	Allowed	÷	Restricted	I	Interference	O	Objected

☐ Claims renumbered in the same order as presented by applicant ☐ CPA ☐ T.D. ☐ R.1.47

CLAIM		DATE								
Final	Original	07/25/2008								
	1	✓								
	2	✓								
	3	✓								
	4	✓								
	5	✓								
	6	✓								
	7	✓								
	8	✓								
	9	✓								
	10	✓								
	11	✓								
	12	✓								
	13	✓								
	14	✓								
	15	✓								
	16	✓								
	17	✓								
	18	✓								
	19	✓								
	20	✓								

ZTE, Exhibit 1002-0166

EAST Search History

Ref #	Hits	Search Query	DBs	Default Operator	Plurals	Time Stamp
L1	4	(US-20050286663-$ or US-20020187753-$ or US-20040042558-$ or US-20030139196-$). did.	US-PGPUB	OR	ON	2008/07/25 13:56
L2	0	1 and polar	US-PGPUB; USPAT; EPO; JPO; DERWENT	OR	ON	2008/07/25 13:56
L3	7	polar same cartesian same beamforming same matrix	US-PGPUB; USPAT; EPO; JPO; DERWENT	OR	ON	2008/07/25 13:56
L4	0	polar same scalar same beamforming same matrix	US-PGPUB; USPAT; EPO; JPO; DERWENT	OR	ON	2008/07/25 13:59
L5	193	polar same cartesian same matrix	US-PGPUB; USPAT; EPO; JPO; DERWENT	OR	ON	2008/07/25 13:59
L6	2	"5541607".pn.	US-PGPUB; USPAT; EPO; JPO; DERWENT	OR	ON	2008/07/25 14:01
S1	2	"US 20060239374"	US-PGPUB; USPAT; USOCR; DERWENT	OR	ON	2008/07/24 08:45
S2	19	("20050286663" | "20060067428" | "20060155534" | "20060234645" | "3858221" | "3916533" | "4843631" | "5541607").PN.	US-PGPUB; USPAT; EPO; JPO; DERWENT	OR	ON	2008/07/24 08:54
S3	508	375/299.ccls.	US-PGPUB; USPAT; EPO; JPO; DERWENT	OR	ON	2008/07/24 09:54
S4	17	((CARLOS) near2 (ALDANA)).INV.	US-PGPUB; USPAT	OR	ON	2008/07/24 09:55
S5	37	((JOONSUK) near2 (KIM)).INV.	US-PGPUB; USPAT	OR	ON	2008/07/24 09:55
S6	51	S4 or S5	US-PGPUB; USPAT; EPO; JPO; DERWENT	OR	ON	2008/07/24 09:56

ZTE, Exhibit 1002-0167

S7	23	S6 and beamform$3	US-PGPUB; USPAT; EPO; JPO; DERWENT	OR	ON	2008/07/24 09:56
S8	267	SVD and beamform$3	US-PGPUB; USPAT; EPO; JPO; DERWENT	OR	ON	2008/07/24 10:01
S9	15	S8 and (response same unitary)	US-PGPUB; USPAT; EPO; JPO; DERWENT	OR	ON	2008/07/24 10:05
S10	45	(response same (unitary with matrix) same transmitt$3 same receiv$3)	US-PGPUB; USPAT; EPO; JPO; DERWENT	OR	ON	2008/07/24 10:12
S11	65	(feedback$3 same (unitary with matrix) same transmitt$3)	US-PGPUB; USPAT; EPO; JPO; DERWENT	OR	ON	2008/07/24 11:12
S12	320	(feedback$3 same ((unitary with matrix) or beamforming) same transmitt$3)	US-PGPUB; USPAT; EPO; JPO; DERWENT	OR	ON	2008/07/24 11:12
S13	89	S12 and SVD	US-PGPUB; USPAT; EPO; JPO; DERWENT	OR	ON	2008/07/24 11:13
S14	101	SVD and (beamforming same matrix same transmitt $3 same receiv$3)	US-PGPUB; USPAT; EPO; JPO; DERWENT	OR	ON	2008/07/25 09:41
S15	78	S14 and (diagonal with matrix)	US-PGPUB; USPAT; EPO; JPO; DERWENT	OR	ON	2008/07/25 09:42

7/ 25/ 2008 2:18:26 PM

ZTE, Exhibit 1002-0168

Search Notes	Application/Control No.	Applicant(s)/Patent Under Reexamination
	11237341	ALDANA ET AL.
	Examiner	**Art Unit**
	MICHAEL R NEFF	2611

SEARCHED			
Class	**Subclass**	**Date**	**Examiner**
375	267	7/24/2008	MRN

SEARCH NOTES		
Search Notes	**Date**	**Examiner**
Class / Subclass search performed with keyword limitations	7/24/2008	MRN
Inventor / Double patenting search performed in EAST database	7/24/2008	MRN

INTERFERENCE SEARCH			
Class	**Subclass**	**Date**	**Examiner**

ZTE, Exhibit 1002-0169

UNITED STATES PATENT AND TRADEMARK OFFICE

UNITED STATES DEPARTMENT OF COMMERCE
United States Patent and Trademark Office
Address: COMMISSIONER FOR PATENTS
P.O. Box 1450
Alexandria, Virginia 22313-1450
www.uspto.gov

BIB DATA SHEET

CONFIRMATION NO. 6712

SERIAL NUMBER	FILING or 371(c) DATE	CLASS	GROUP ART UNIT	ATTORNEY DOCKET NO.
11/237,341	09/28/2005 RULE	375	2611	BP4880

APPLICANTS

Carlos Aldana, San Francisco, CA;
Joonsuk Kim, San Jose, CA;

**** CONTINUING DATA ***************************

This application is a CIP of 11/168,793 06/28/2005
which claims benefit of 60/673,451 04/21/2005

**** FOREIGN APPLICATIONS ***************************

**** IF REQUIRED, FOREIGN FILING LICENSE GRANTED ****

10/26/2005

Foreign Priority claimed ☐ Yes ☑ No 35 USC 119(a-d) conditions met ☐ Yes ☑ No Verified and Acknowledged /MICHAEL R NEFF/ Examiner's Signature	☐ Met after Allowance Initials	STATE OR COUNTRY	SHEETS DRAWINGS	TOTAL CLAIMS	INDEPENDENT CLAIMS
		CA	8	20	3

ADDRESS

GARLICK HARRISON & MARKISON
P.O. BOX 160727
AUSTIN, TX 78716-0727
UNITED STATES

TITLE

Efficient feedback of channel information in a closed loop beamforming wireless communication system

FILING FEE RECEIVED		
1000	FEES: Authority has been given in Paper No._____ to charge/credit DEPOSIT ACCOUNT No._____ for following:	☐ All Fees ☐ 1.16 Fees (Filing) ☐ 1.17 Fees (Processing Ext. of time) ☐ 1.18 Fees (Issue) ☐ Other _____ ☐ Credit

ZTE, Exhibit 1002-0170

RECEIVED
CENTRAL FAX CENTER

AUG 29 2006

PTO/SB/96 (12-05)
Approved for use through 07/31/2006. OMB 0651-0031
U.S. Patent and Trademark Office; U.S. DEPARTMENT OF COMMERCE
Under the Paperwork Reduction Act of 1995, no persons are required to respond to a collection of information unless it displays a valid OMB control number.

STATEMENT UNDER 37 CFR 3.73(b)

Applicant/Patent Owner: Aldana, et al

Application No./Patent No./Control No.: 11/237,341 BP4880 Filed/Issue Date: 09/28/2005

Entitled: Efficient Feedback Of Channel Information In A Closed Loop Beamforming Wireless Communications Systems

Broadcom Corporation, a California Corporation
(Name of Assignee) (Type of Assignee: corporation, partnership, university, government agency, etc.)

states that it is:

1. [✓] the assignee of the entire right, title, and interest; or

2. [ ] an assignee of less than the entire right, title and interest
(The extent (by percentage) of its ownership interest is _____%)

in the patent application/patent identified above by virtue of either:

A. [✓] An assignment from the inventor(s) of the patent application/patent identified above. The assignment was recorded in the United States Patent and Trademark Office at Reel 016729, Frame 0421, or a true copy of the original assignment is attached.

OR

B. [ ] A chain of title from the inventor(s), of the patent application/patent identified above, to the current assignee as follows:

1. From: _____ To: _____
The document was recorded in the United States Patent and Trademark Office at
Reel _____, Frame _____, or for which a copy thereof is attached.

2. From: _____ To: _____
The document was recorded in the United States Patent and Trademark Office at
Reel _____, Frame _____, or for which a copy thereof is attached.

3. From: _____ To: _____
The document was recorded in the United States Patent and Trademark Office at
Reel _____, Frame _____, or for which a copy thereof is attached.

[ ] Additional documents in the chain of title are listed on a supplemental sheet.

As required by 37 CFR 3.73(b)(1)(i), the documentary evidence of the chain of title from the original owner to the assignee was, or concurrently is being, submitted for recordation pursuant to 37 CFR 3.11.

[NOTE: A separate copy (*i.e.*, a true copy of the original assignment document(s)) must be submitted to Assignment Division in accordance with 37 CFR Part 3, to record the assignment in the records of the USPTO. See MPEP 302.08]

The undersigned (whose title is supplied below) is authorized to act on behalf of the assignee.

/Bruce E. Garlick, Reg.No. 36,520/ — Signature

08/29/2006 — Date

Bruce E. Garlick, Reg.No. 36,520 — Printed or Typed Name

512-264-8816 — Telephone Number

Practitioner associated with USPTO CN 51,472 — Title

This collection of information is required by 37 CFR 3.73(b). The information is required to obtain or retain a benefit by the public which is to file (and by the USPTO to process) an application. Confidentiality is governed by 35 U.S.C. 122 and 37 CFR 1.11 and 1.14. This collection is estimated to take 12 minutes to complete, including gathering, preparing, and submitting the completed application form to the USPTO. Time will vary depending upon the individual case. Any comments on the amount of time you require to complete this form and/or suggestions for reducing this burden, should be sent to the Chief Information Officer, U.S. Patent and Trademark Office, U.S. Department of Commerce, P.O. Box 1450, Alexandria, VA 22313-1450. DO NOT SEND FEES OR COMPLETED FORMS TO THIS ADDRESS. **SEND TO: Commissioner for Patents, P.O. Box 1450, Alexandria, VA 22313-1450.**

If you need assistance in completing the form, call 1-800-PTO-9199 and select option 2.

ZTE, Exhibit 1002-0171

11/251,341

PTO/SB/80 (01-06)
Approved for use through 12/31/2006. OMB 0651-0035
U.S. Patent and Trademark Office; U.S. DEPARTMENT OF COMMERCE
Under the Paperwork Reduction Act of 1995, no persons are required to respond to a collection of information unless it displays a valid OMB control number.

POWER OF ATTORNEY TO PROSECUTE APPLICATIONS BEFORE THE USPTO

I hereby revoke all previous powers of attorney given in the application identified in the attached statement under 37 CFR 3.73(b).

I hereby appoint:

☑ Practitioners associated with the Customer Number: 51472

OR

☐ Practitioner(s) named below (if more than ten patent practitioners are to be named, then a customer number must be used):

Name	Registration Number	Name	Registration Number

as attorney(s) or agent(s) to represent the undersigned before the United States Patent and Trademark Office (USPTO) in connection with any and all patent applications assigned only to the undersigned according to the USPTO assignment records or assignment documents attached to this form in accordance with 37 CFR 3.73(b).

Please change the correspondence address for the application identified in the attached statement under 37 CFR 3.73(b) to:

☑ The address associated with Customer Number: 51472

OR

☐ Firm or Individual Name	Garlick Harrison & Markison
Address	P.O. Box 160727
City	Austin
State	Texas
Zip	78716-0727
Country	USA
Telephone	(512) 264-8816
Email	(512) 264-3735

Assignee Name and Address:

Broadcom Corporation
16215 Alton Parkway
Irvine, California 92618-7013

Note: Broadcom Corporation is a California corporation

A copy of this form, together with a statement under 37 CFR 3.73(b) (Form PTO/SB/96 or equivalent) is required to be filed in each application in which this form is used. The statement under 37 CFR 3.73(b) may be completed by one of the practitioners appointed in this form if the appointed practitioner is authorized to act on behalf of the assignee, and must identify the application in which this Power of Attorney is to be filed.

SIGNATURE of Assignee of Record

The individual whose signature and title is supplied below is authorized to act on behalf of the assignee

Signature		Date	4/7/06
Name	Dee Henderson	Telephone	(949) 450-8700
Title	Senior Manager, Intellectual Property Administration		

This collection of information is required by 37 CFR 1.31, 1.32 and 1.33. The information is required to obtain or retain a benefit by the public which is to file (and by the USPTO to process) an application. Confidentiality is governed by 35 U.S.C. 122 and 37 CFR 1.11 and 1.14. This collection is estimated to take 3 minutes to complete, including gathering, preparing, and submitting the completed application form to the USPTO. Time will vary depending upon the individual case. Any comments on the amount of time you require to complete this form and/or suggestions for reducing this burden, should be sent to the Chief Information Officer, U.S. Patent and Trademark Office, U.S. Department of Commerce, P.O. Box 1450, Alexandria, VA 22313-1450. DO NOT SEND FEES OR COMPLETED FORMS TO THIS ADDRESS. SEND TO: Commissioner for Patents, P.O. Box 1450, Alexandria, VA 22313-1450.

If you need assistance in completing the form, call 1-800-PTO-9199 and select option 2.

ZTE, Exhibit 1002-0172

RECEIVED
CENTRAL FAX CENTER
AUG 29 2006

GARLICK, HARRISON & MARKISON
ATTORNEYS AT LAW
P. O. BOX 160727
AUSTIN, TEXAS 78716-0727
TELEPHONE (512) 288-5299 DIANE HUDSON, LEGAL ASSISTANT
FACSIMILE (512) 301-3707

♦ INTELLECTUAL PROPERTY AND TECHNOLOGY LAW ♦

FACSIMILE

To: USPTO
Commissioner for Patents

Fax No: (571) 273-8300

From: Diane Hudson, Legal Assistant for
Bruce E. Garlick (Reg. #36,520)

Re: Serial No. 11/237,341
Attorney Docket No. BP4880

Date: 08/29/2006

Pages: 5 total
(including cover sheet)

Message: Faxing:

(1) 37CFR 3.73(b) Statement;
(2) Power of Attorney;
(3) Henry Samueli authorization letter; and
(4) Dee Henderson authorization letter

The information contained in this communication is confidential, may be attorney-client privileged, may constitute inside information, and is intended only for the use of the addressee. Unauthorized use, disclosure or copying of this communication or any part thereof is strictly prohibited and may be unlawful.

11/237,341

RECEIVED
CENTRAL FAX CENTER
AUG 29 2006

BROADCOM CORPORATION
16215 Alton Parkway, P.O. Box 57013
Irvine, California 92619-7013

Phone: 949-450-8700
Fax: 949-450-8710

February 8, 2005

To whom it may concern:

I, Henry Samueli, hereby authorize Dee Henderson, Senior Manager, Intellectual Property Administration, to execute documents relating to US and foreign patent and trademark matters on behalf of Broadcom Corporation and/or its subsidiaries.

Henry Samueli, Ph.D.
Chief Technical Officer

ZTE, Exhibit 1002-0174

11/237,34

RECEIVED
CENTRAL FAX CENTER
AUG 29 2006

BROADCOM CORPORATION
16215 Alton Parkway, P.O. Box 57013
Irvine, California 92619-7013
Phone: 949-450-8700
Fax: 949-450-8710

June 2, 2006

TO WHOM IT MAY CONCERN

I, Dee Henderson, do hereby authorize the practitioners associated with USPTO (United States Patent and Trademark Office) Customer Number 51472 (whose information is provided below) to act on behalf of the Assignee, Broadcom Corporation, in patent related matters before the USPTO.

This authorization granted to practitioners associated with USPTO Customer Number 51472 includes the authorization to execute statements made under 37 C.F.R. §3.73(b) on behalf of the Assignee, Broadcom Corporation.

Dee Henderson
Senior Manager, Intellectual Property Administration

USPTO CN 51472
Garlick Harrison & Markison
P.O. Box 160727
Austin, Texas 78716-0727
TEL: (512) 264-8816
FAX: (512) 264-3735

ZTE, Exhibit 1002-0175

Please type a plus sign (+) inside this box ——— [+]

PTO/SB/01 (11_00)
Approved for use through 10/31/2002. OMB 0651-0032
U.S. Patent and Trademark Office: U.S. DEPARTMENT OF COMMERCE
Under the Paperwork Reduction Act of 1995, no persons are required to respond to a collection of information unless it displays a valid OMB control number.

092805 20427 U.S. PTO

UTILITY PATENT APPLICATION TRANSMITTAL

(Only for new nonprovisional applications under 37 CFR 1.53(b))

Attorney Docket No.	BP4880
First Inventor	Carlos Aldana
Title	EFFICIENT FEEDBACK OF CHANNEL INFORMATION IN A CLOSED LOOP BEAMFORMING WIRELESS COMMUNICATION
Express Mail Label No.	EV731040220US

APPLICATION ELEMENTS

See MPEP chapter 600 concerning utility patent application contents

ADDRESS TO: Box Patent Application
Washington, DC 20231

113013 U.S. PTO 11/23734 092805

1. [X] Fee Transmittal Form (e.g. PTO/SB/17) *(submit an original and a duplicate for fee processing)*
2. [ ] Applicant claims small entity status. See 37 CFR 1.27.
3. [X] Specification [Total Pages 32] *(preferred arrangement set forth below)*
   - -Descriptive title of the invention
   - -Cross Reference to Related Applications
   - -Statement Regarding Fed sponsored R&D
   - -Reference to sequence listing, a table, or a computer program listing appendix
   - -Background of the Invention
   - -Brief Summary of the Invention
   - -Brief Description of the Drawings *(if filed)*
   - -Detailed Description
   - -Claim(s)
   - -Abstract of the Disclosure
4. [X] Drawing(s) (35 U.S.C. 113) [Total Pages 8]
5. Oath or Declaration [Total Pages 2]
   a. [X] Newly executed (original or copy)
   b. [ ] Copy from a prior application (37 CFR 1.63 (d)) *(for continuation/divisional with Box 18 completed)*
      i. [ ] DELETION OF INVENTOR(S) Signed statement attached deleting inventor(s) named in the prior application, see 37 CFR 1.63(d)(2) and 1.33(b).
6. [ ] Application Data Sheet. See 37 CFR 1.76
7. [ ] CD-ROM or CD-R in duplicate, large table or Computer Program *(Appendix)*
8. Nucleotide and/or Amino Acid Sequence Submission *(if applicable, all necessary)*
   a. [ ] Computer Readable Form (CRF)
   b. Specification Sequence Listing on:
      i. [ ] CD-ROM or CD-R (2 copies); or
      ii. [ ] paper
   c. [ ] Statements verifying identity of above copies

ACCOMPANYING APPLICATION PARTS

9. [ ] Assignment Papers (cover sheet & documents(s))
10. [ ] 37 CFR 3.73(b) Statement *(when there is an ssignee)* [ ] Power of Attorney
11. [ ] English Translation Document *(if applicable)*
12. [ ] Information Disclosure Statement (IDS)/PTO-1449 [ ] Copies of IDS Citations
13. [ ] Preliminary Amendment
14. [X] Return Receipt Postcard (MPEP 503) *(Should be specifically itemized)*
15. [ ] Certified Copy of Priority Document(s) *(if foreign priority is claimed)*
16. [ ] Request and Certification under 35 U.S.C. 122 (b)(2)(B)(i). Applicant must attach form PTO/SB/35 or its equivalent.
17. [ ] Other: .....

18. If a CONTINUING APPLICATION, check appropriate box, and supply the requisite information below and in a preliminary amendment, or in an Application Data Sheet under 37 CFR 1.76:

[ ] Continuation [ ] Divisional [X] Continuation-in-part (CIP) of prior application No: 11/168,793

Prior application information: Examiner_ Group Art Unit: _____

For CONTINUATION OR DIVISIONAL APPS only: The entire disclosure of the prior application, from which an oath or declaration is supplied under Box 5b, is considered a part of the disclosure of the accompanying continuation or divisional application and is hereby incorporatied by reference. The incorporation can only be relied upon when a portion has been inadvertently omitted from the submitted application parts.

19. CORRESPONDENCE ADDRESS

[X] Customer Number or Bar Code Label 51,472 (insert customer no. or attach bar code label here) or [ ] Correspondence address below

Name	Bruce E. Garlick				
Address	P. O. Box 160727				
City	Austin	State	Texas	Zip Code	78716-0727
Country	USA	Telephone	(512) 264-8816	FAX	(512) 264-3735

Name (Print/Type)	Bruce E. Garlick	Registration No. (Atty/Agent)	36,520
Signature	/Bruce E. Garlick/	Date	9/28/2005

SEND TO: Assistant Commissioner for Patents, Washington, DC 20231

ZTE, Exhibit 1002-0176

20427
092805

PTO/SB/17 (12_04)
Approved for use through 7/31/2006. OMB 0651-0032
U.S. Patent and Trademark Office: U.S. DEPARTMENT OF COMMERCE
Under the Paperwork Reduction Act of 1995, no persons are required to respond to a collection of information unless it displays a valid OMB control number.

U.S. PTO

FEE TRANSMITTAL for FY 2005

Complete if Known	
Application Number	
Filing Date	
First Named Inventor	Carlos Aldana
Examiner Name	
Group Art Unit	
Atty Docket No.	BP4880

☐ Applicant claims small entity status

TOTAL AMOUNT OF PAYMENT ($) $1000.00

METHOD OF PAYMENT (check all that apply)

☐ Check ☒ Credit card ☐ Money Order ☐ None ☐ Other:

☒ Deposit Account Deposit Account Number 50-2126 Deposit Account Name Garlick, Harrison & Markison

For the above identified deposit account, the Director is hereby authorized to: (check all that apply)

☐ Charge fee(s) indicated below

☐ Charge fee(s) indicated below, expect for the filing fee

☒ Charge Any Additional Fee(s) or underpayment of fee(s) Under 37 CFR 1.16 and 1.17

☒ Credit any overpayments

Warning: Information on this form may become public. Credit card information should not be included on this form. Provide Credit card information and authorization on PTO-2038.

FEE CALCULATION

1. BASIC FILING, SEARCH, AND EXAMINATION FEES

Application Type	FILING FEE	SEARCH FEE	EXAMINATION FEE	TOTAL
Utility	300.00	500.00	200.00	1000.00
Design				
Plant				
Reissue				
Provisional				

2. EXCESS CLAIM FEES

	No. of Claims		Relavent # of Claims		Per Claim Fee		Total Fee
Total	20	-20 =	0	X	50	=	0.00
Independent	3	-3 =	0	X	200	=	0.00
Multiple Dependent				X	360	=	0.00

3. APPLICATION SIZE FEE

Total Sheets		Extra Sheets		Extra sheet multiplier	Fee	Size fee due
40	- 100 =	0	/50 =	0	250.00	0.00

4. OTHER FEE(S)

Recording each patent assignment per property (times number of properties)

Other fee (specify)

SUBMITTED BY					Complete *(if applicable)*
Name *(Print Type)*	Bruce E. Garlick	Registration No. *(Attorney Agent)*	36,520	Telephone	(512) 264-8816
Signature	/Bruce E. Garlick/			Date	9/28/2005

SEND TO: Commissioner for Patents, P.O. Box 1450, Alexandria, VA 22313

Please type a plus sign (+) inside this box ——[+]

PTO/SB/01 (11_00)
Approved for use through 10/31/2002. OMB 0651-0032
U.S. Patent and Trademark Office: U.S. DEPARTMENT OF COMMERCE
Under the Paperwork Reduction Act of 1995, no persons are required to respond to a collection of information unless it displays a valid OMB control number.

092805 20427 U.S. PTO

UTILITY PATENT APPLICATION TRANSMITTAL

(Only for new nonprovisional applications under 37 CFR 1.53(b))

Attorney Docket No.	BP4880
First Inventor	Carlos Aldana
Title	EFFICIENT FEEDBACK OF CHANNEL INFORMATION IN A CLOSED LOOP BEAMFORMING WIRELESS COMMUNICATION
Express Mail Label No.	EV731040220US

APPLICATION ELEMENTS

See MPEP chapter 600 concerning utility patent application contents

ADDRESS TO: Box Patent Application
Washington, DC 20231

113013 U.S. PTO 11/23734 092805

1. [X] Fee Transmittal Form (e.g. PTO/SB/17) *(submit an original and a duplicate for fee processing)*
2. [ ] Applicant claims small entity status. See 37 CFR 1.27.
3. [X] Specification [Total Pages 32] *(preferred arrangement set forth below)*
   - -Descriptive title of the invention
   - -Cross Reference to Related Applications
   - -Statement Regarding Fed sponsored R&D
   - -Reference to sequence listing, a table, or a computer program listing appendix
   - -Background of the Invention
   - -Brief Summary of the Invention
   - -Brief Description of the Drawings *(if filed)*
   - -Detailed Description
   - -Claim(s)
   - -Abstract of the Disclosure
4. [X] Drawing(s) (35 U.S.C. 113) [Total Pages 8]
5. Oath or Declaration [Total Pages 2]
   a. [X] Newly executed (original or copy)
   b. [ ] Copy from a prior application (37 CFR 1.63 (d)) *(for continuation/divisional with Box 18 completed)*
      i. [ ] DELETION OF INVENTOR(S) Signed statement attached deleting inventor(s) named in the prior application, see 37 CFR 1.63(d)(2) and 1.33(b).
6. [ ] Application Data Sheet. See 37 CFR 1.76
7. [ ] CD-ROM or CD-R in duplicate, large table or Computer Program *(Appendix)*
8. Nucleotide and/or Amino Acid Sequence Submission *(if applicable, all necessary)*
   a. [ ] Computer Readable Form (CRF)
   b. Specification Sequence Listing on:
      i. [ ] CD-ROM or CD-R (2 copies); or
      ii. [ ] paper
   c. [ ] Statements verifying identity of above copies

ACCOMPANYING APPLICATION PARTS

9. [ ] Assignment Papers (cover sheet & documents(s))
10. [ ] 37 CFR 3.73(b) Statement *(when there is an ssignee)* [ ] Power of Attorney
11. [ ] English Translation Document *(if applicable)*
12. [ ] Information Disclosure Statement (IDS)/PTO-1449 [ ] Copies of IDS Citations
13. [ ] Preliminary Amendment
14. [X] Return Receipt Postcard (MPEP 503) *(Should be specifically itemized)*
15. [ ] Certified Copy of Priority Document(s) *(if foreign priority is claimed)*
16. [ ] Request and Certification under 35 U.S.C. 122 (b)(2)(B)(i). Applicant must attach form PTO/SB/35 or its equivalent.
17. [ ] Other: .....

18. If a CONTINUING APPLICATION, check appropriate box, and supply the requisite information below and in a preliminary amendment, or in an Application Data Sheet under 37 CFR 1.76:

[ ] Continuation [ ] Divisional [X] Continuation-in-part (CIP) of prior application No: 11/168,793

Prior application information: Examiner_ Group Art Unit: _____

For CONTINUATION OR DIVISIONAL APPS only: The entire disclosure of the prior application, from which an oath or declaration is supplied under Box 5b, is considered a part of the disclosure of the accompanying continuation or divisional application and is hereby incorporatied by reference. The incorporation can only be relied upon when a portion has been inadvertently omitted from the submitted application parts.

19. CORRESPONDENCE ADDRESS

[X] Customer Number or Bar Code Label 51,472 (insert customer no. or attach bar code label here) or [ ] Correspondence address below

Name	Bruce E. Garlick				
Address	P. O. Box 160727				
City	Austin	State	Texas	Zip Code	78716-0727
Country	USA	Telephone	(512) 264-8816	FAX	(512) 264-3735

Name (Print/Type)	Bruce E. Garlick	Registration No. (Atty/Agent)	36,520
Signature	/Bruce E. Garlick/	Date	9/28/2005

SEND TO: Assistant Commissioner for Patents, Washington, DC 20231

ZTE, Exhibit 1002-0178

20427
092805

PTO/SB/17 (12_04)
Approved for use through 7/31/2006. OMB 0651-0032
U.S. Patent and Trademark Office: U.S. DEPARTMENT OF COMMERCE
Under the Paperwork Reduction Act of 1995, no persons are required to respond to a collection of information unless it displays a valid OMB control number.

U.S. PTO

FEE TRANSMITTAL for FY 2005

Complete if Known	
Application Number	
Filing Date	
First Named Inventor	Carlos Aldana
Examiner Name	
Group Art Unit	
Atty Docket No.	BP4880

☐ Applicant claims small entity status

TOTAL AMOUNT OF PAYMENT ($) $1000.00

METHOD OF PAYMENT (check all that apply)

☐ Check ☒ Credit card ☐ Money Order ☐ None ☐ Other:

☒ Deposit Account Deposit Account Number 50-2126 Deposit Account Name Garlick, Harrison & Markison

For the above identified deposit account, the Director is hereby authorized to: (check all that apply)

☐ Charge fee(s) indicated below

☐ Charge fee(s) indicated below, expect for the filing fee

☒ Charge Any Additional Fee(s) or underpayment of fee(s) Under 37 CFR 1.16 and 1.17

☒ Credit any overpayments

Warning: Information on this form may become public. Credit card information should not be included on this form. Provide Credit card information and authorization on PTO-2038.

FEE CALCULATION

1. BASIC FILING, SEARCH, AND EXAMINATION FEES

Application Type	FILING FEE	SEARCH FEE	EXAMINATION FEE	TOTAL
Utility	300.00	500.00	200.00	1000.00
Design				
Plant				
Reissue				
Provisional				

2. EXCESS CLAIM FEES

	No. of Claims		Relavent # of Claims		Per Claim Fee		Total Fee
Total	20	-20 =	0	X	50	=	0.00
Independent	3	-3 =	0	X	200	=	0.00
Multiple Dependent				X	360	=	0.00

3. APPLICATION SIZE FEE

Total Sheets		Extra Sheets		Extra sheet multiplier	Fee	Size fee due
40	- 100 =	0	/50 =	0	250.00	0.00

4. OTHER FEE(S)

Recording each patent assignment per property (times number of properties)

Other fee (specify)

SUBMITTED BY					Complete *(if applicable)*
Name *(Print Type)*	Bruce E. Garlick	Registration No. *(Attorney Agent)*	36,520	Telephone	(512) 264-8816
Signature	/Bruce E. Garlick/			Date	9/28/2005

SEND TO: Commissioner for Patents, P.O. Box 1450, Alexandria, VA 22313

DOCKET NO. BP4880

TITLE OF THE INVENTION

EFFICIENT FEEDBACK OF CHANNEL INFORMATION IN A CLOSED LOOP BEAMFORMING WIRELESS COMMUNICATION SYSTEM

INVENTORS

Carlos Aldana

Joonsuk Kim

SPECIFICATION

CROSS REFERENCES TO RELATED APPLICATIONS

This application is a continuation-in-part of U.S. Utility Application No. 11/168,793, filed June 28, 2005 which claims priority to U.S. Provisional Patent Application Serial No. 60/673,451, filed April 21, 2005, and claims priority to U.S. Provisional Patent Application Serial No. 60/698,686, filed July 13, 2005, all of which are incorporated herein by reference for all purposes.

BACKGROUND OF THE INVENTION

1. TECHNICAL FIELD OF THE INVENTION

This invention relates generally to wireless communication systems and more particularly to wireless communications using beamforming.

2. DESCRIPTION OF RELATED ART

Communication systems are known to support wireless and wire lined communications between wireless and/or wire lined communication devices. Such communication systems range from national and/or international cellular telephone systems to the Internet to point-to-point in-home wireless networks. Each type of communication system is constructed, and hence operates, in accordance with one or more communication standards. For instance, wireless communication systems may operate in accordance with one or more standards including, but not limited to, IEEE

ZTE, Exhibit 1002-0180

802.11, Bluetooth, advanced mobile phone services (AMPS), digital AMPS, global system for mobile communications (GSM), code division multiple access (CDMA), local multi-point distribution systems (LMDS), multi-channel-multi-point distribution systems (MMDS), and/or variations thereof.

Depending on the type of wireless communication system, a wireless communication device, such as a cellular telephone, two-way radio, personal digital assistant (PDA), personal computer (PC), laptop computer, home entertainment equipment, et cetera communicates directly or indirectly with other wireless communication devices. For direct communications (also known as point-to-point communications), the participating wireless communication devices tune their receivers and transmitters to the same channel or channels (e.g., one of the plurality of radio frequency (RF) carriers of the wireless communication system) and communicate over that channel(s). For indirect wireless communications, each wireless communication device communicates directly with an associated base station (e.g., for cellular services) and/or an associated access point (e.g., for an in-home or in-building wireless network) via an assigned channel. To complete a communication connection between the wireless communication devices, the associated base stations and/or associated access points communicate with each other directly, via a system controller, via the public switch telephone network, via the Internet, and/or via some other wide area network.

For each wireless communication device to participate in wireless communications, it includes a built-in radio transceiver (i.e., receiver and transmitter) or is coupled to an associated radio transceiver (e.g., a station for in-home and/or in-building wireless communication networks, RF modem, etc.). As is known, the receiver is coupled to the antenna and includes a low noise amplifier, one or more intermediate frequency stages, a filtering stage, and a data recovery stage. The low noise amplifier receives inbound RF signals via the antenna and amplifies then. The one or more intermediate frequency stages mix the amplified RF signals with one or more local oscillations to convert the amplified RF signal into baseband signals or intermediate frequency (IF) signals. The filtering stage filters the baseband signals or the IF signals to

ZTE, Exhibit 1002-0181

attenuate unwanted out of band signals to produce filtered signals. The data recovery stage recovers raw data from the filtered signals in accordance with the particular wireless communication standard.

As is also known, the transmitter includes a data modulation stage, one or more intermediate frequency stages, and a power amplifier. The data modulation stage converts raw data into baseband signals in accordance with a particular wireless communication standard. The one or more intermediate frequency stages mix the baseband signals with one or more local oscillations to produce RF signals. The power amplifier amplifies the RF signals prior to transmission via an antenna.

In many systems, the transmitter will include one antenna for transmitting the RF signals, which are received by a single antenna, or multiple antennas, of a receiver. When the receiver includes two or more antennas, the receiver will select one of them to receive the incoming RF signals. In this instance, the wireless communication between the transmitter and receiver is a single-output-single-input (SISO) communication, even if the receiver includes multiple antennas that are used as diversity antennas (i.e., selecting one of them to receive the incoming RF signals). For SISO wireless communications, a transceiver includes one transmitter and one receiver. Currently, most wireless local area networks (WLAN) that are IEEE 802.11, 802.11a, 802,11b, or 802.11g employ SISO wireless communications.

Other types of wireless communications include single-input-multiple-output (SIMO), multiple-input-single-output (MISO), and multiple-input-multiple-output (MIMO). In a SIMO wireless communication, a single transmitter processes data into radio frequency signals that are transmitted to a receiver. The receiver includes two or more antennas and two or more receiver paths. Each of the antennas receives the RF signals and provides them to a corresponding receiver path (e.g., LNA, down conversion module, filters, and ADCs). Each of the receiver paths processes the received RF signals to produce digital signals, which are combined and then processed to recapture the transmitted data.

ZTE, Exhibit 1002-0182

For a multiple-input-single-output (MISO) wireless communication, the transmitter includes two or more transmission paths (e.g., digital to analog converter, filters, up-conversion module, and a power amplifier) that each converts a corresponding portion of baseband signals into RF signals, which are transmitted via corresponding antennas to a receiver. The receiver includes a single receiver path that receives the multiple RF signals from the transmitter. In this instance, the receiver uses beam forming to combine the multiple RF signals into one signal for processing.

For a multiple-input-multiple-output (MIMO) wireless communication, the transmitter and receiver each include multiple paths. In such a communication, the transmitter parallel processes data using a spatial and time encoding function to produce two or more streams of data. The transmitter includes multiple transmission paths to convert each stream of data into multiple RF signals. The receiver receives the multiple RF signals via multiple receiver paths that recapture the streams of data utilizing a spatial and time decoding function. The recaptured streams of data are combined and subsequently processed to recover the original data.

To further improve wireless communications, transceivers may incorporate beamforming. In general, beamforming is a processing technique to create a focused antenna beam by shifting a signal in time or in phase to provide gain of the signal in a desired direction and to attenuate the signal in other directions. Prior art papers (1) Digital beamforming basics (antennas) by Steyskal, Hans, Journal of Electronic Defense, 7/1/1996; (2) Utilizing Digital Down converters for Efficient Digital Beamforming, by Clint Schreiner, Red River Engineering, no publication date; and (3) Interpolation Based Transmit Beamforming for MIMO-OFMD with Partial Feedback, by Jihoon Choi and Robert W. Heath, University of Texas, Department of Electrical and Computer Engineering, Wireless Networking and Communications Group, September, 13, 2003 discuss beamforming concepts.

ZTE, Exhibit 1002-0183

In order for a transmitter to properly implement beamforming (i.e., determine the beamforming matrix [V]), it needs to know properties of the channel over which the wireless communication is conveyed. Accordingly, the receiver must provide feedback information for the transmitter to determine the properties of the channel. One approach for sending feedback from the receiver to the transmitter is for the receiver to determine the channel response (H) and to provide it as the feedback information. An issue with this approach is the size of the feedback packet, which may be so large that, during the time it takes to send it to the transmitter, the response of the channel has changed.

To reduce the size of the feedback, the receiver may decompose the channel using singular value decomposition (SVD) and send information relating only to a calculated value of the transmitter's beamforming matrix (V) as the feedback information. In this approach, the receiver calculates (V) based on H = UDV*, where H is the channel response, D is a diagonal matrix, and U is a receiver unitary matrix. While this approach reduces the size of the feedback information, its size is still an issue for a MIMO wireless communication. For instance, in a 2x2 MIMO wireless communication, the feedback needs four elements that are all complex Cartesian coordinate values [V11 V12; V21 V22]. In general, Vik = aik + j*bik, where aik and bik are values between [-1, 1]. Thus, with 1 bit express per each element for each of the real and imaginary components, aik and bik can be either – ½ or ½, which requires 4x2x1 = 8 bits per tone. With 4 bit expressions per each element of V(f) in an orthogonal frequency division multiplexing (OFDM) 2 x 2 MIMO wireless communication, the number of bits required is 1728 per tone (e.g., 4*2*54*4 = 1728, 4 elements per tone, 2 bits for real and imaginary components per tone, 54 data tones per frame, and 4 bits per element), which requires overhead for a packet exchange that is too large for practical applications.

Therefore, a need exists for a method and apparatus for reducing beamforming feedback information for wireless communications.

ZTE, Exhibit 1002-0184

BRIEF SUMMARY OF THE INVENTION

The present invention is directed to apparatus and methods of operation that are further described in the following Brief Description of the Drawings, the Detailed Description of the Invention, and the claims. Other features and advantages of the present invention will become apparent from the following detailed description of the invention made with reference to the accompanying drawings.

BRIEF DESCRIPTION OF THE SEVERAL VIEWS OF THE DRAWINGS

Figure 1 is a schematic block diagram of a wireless communication system in accordance with the present invention;

Figure 2 is a schematic block diagram illustrating an embodiment of a wireless communication device in accordance with the present invention;

Figure 3 is a schematic block diagram illustrating another embodiment of another wireless communication device in accordance with the present invention;

Figure 4 is a schematic block diagram of baseband transmit processing in accordance with the present invention;

Figure 5 is a schematic block diagram of baseband receive processing in accordance with the present invention;

Figure 6 is a schematic block diagram of a beamforming wireless communication in accordance with the present invention;

Figure 7 is a flow chart illustrating another embodiment of the present invention for providing beamforming feedback information from a receiver to a transmitter; and

Figure 8 is a flow chart illustrating another embodiment of the present invention for providing beamforming feedback information from a receiver to a transmitter

ZTE, Exhibit 1002-0185

DETAILED DESCRIPTION OF THE INVENTION

Figure 1 is a schematic block diagram illustrating a communication system 10 that includes a plurality of base stations and/or access points 12, 16, a plurality of wireless communication devices 18-32 and a network hardware component 34. Note that the network hardware 34, which may be a router, switch, bridge, modem, system controller, et cetera provides a wide area network connection 42 for the communication system 10. Further note that the wireless communication devices 18-32 may be laptop host computers 18 and 26, personal digital assistant hosts 20 and 30, personal computer hosts 24 and 32 and/or cellular telephone hosts 22 and 28. The details of the wireless communication devices will be described in greater detail with reference to Figure 2.

Wireless communication devices 22, 23, and 24 are located within an independent basic service set (IBSS) area and communicate directly (i.e., point to point). In this configuration, these devices 22, 23, and 24 may only communicate with each other. To communicate with other wireless communication devices within the system 10 or to communicate outside of the system 10, the devices 22, 23, and/or 24 need to affiliate with one of the base stations or access points 12 or 16.

The base stations or access points 12, 16 are located within basic service set (BSS) areas 11 and 13, respectively, and are operably coupled to the network hardware 34 via local area network connections 36, 38. Such a connection provides the base station or access point 12, 16 with connectivity to other devices within the system 10 and provides connectivity to other networks via the WAN connection 42. To communicate with the wireless communication devices within its BSS 11 or 13, each of the base stations or access points 12-16 has an associated antenna or antenna array. For instance, base station or access point 12 wirelessly communicates with wireless communication devices 18 and 20 while base station or access point 16 wirelessly communicates with wireless communication devices 26 – 32. Typically, the wireless communication devices

ZTE, Exhibit 1002-0186

register with a particular base station or access point 12, 16 to receive services from the communication system 10.

Typically, base stations are used for cellular telephone systems and like-type systems, while access points are used for in-home or in-building wireless networks (e.g., IEEE 802.11 and versions thereof, Bluetooth, and/or any other type of radio frequency based network protocol). Regardless of the particular type of communication system, each wireless communication device includes a built-in radio and/or is coupled to a radio.

Figure 2 is a schematic block diagram illustrating an embodiment of a wireless communication device that includes the host device 18-32 and an associated radio 60. For cellular telephone hosts, the radio 60 is a built-in component. For personal digital assistants hosts, laptop hosts, and/or personal computer hosts, the radio 60 may be built-in or an externally coupled component.

As illustrated, the host device 18-32 includes a processing module 50, memory 52, a radio interface 54, an input interface 58, and an output interface 56. The processing module 50 and memory 52 execute the corresponding instructions that are typically done by the host device. For example, for a cellular telephone host device, the processing module 50 performs the corresponding communication functions in accordance with a particular cellular telephone standard.

The radio interface 54 allows data to be received from and sent to the radio 60. For data received from the radio 60 (e.g., inbound data), the radio interface 54 provides the data to the processing module 50 for further processing and/or routing to the output interface 56. The output interface 56 provides connectivity to an output display device such as a display, monitor, speakers, et cetera such that the received data may be displayed. The radio interface 54 also provides data from the processing module 50 to the radio 60. The processing module 50 may receive the outbound data from an input device such as a keyboard, keypad, microphone, et cetera via the input interface 58 or generate the data itself. For data received via the input interface 58, the processing

ZTE, Exhibit 1002-0187

module 50 may perform a corresponding host function on the data and/or route it to the radio 60 via the radio interface 54.

Radio 60 includes a host interface 62, digital receiver processing module 64, an analog-to-digital converter 66, a high pass and low pass filter module 68, an IF mixing down conversion stage 70, a receiver filter 71, a low noise amplifier 72, a transmitter/receiver switch 73, a local oscillation module 74, memory 75, a digital transmitter processing module 76, a digital-to-analog converter 78, a filtering/gain module 80, an IF mixing up conversion stage 82, a power amplifier 84, a transmitter filter module 85, a channel bandwidth adjust module 87, and an antenna 86. The antenna 86 may be a single antenna that is shared by transmit and receive paths as regulated by the Tx/Rx switch 73, or may include separate antennas for the transmit path and receive path. The antenna implementation will depend on the particular standard to which the wireless communication device is compliant.

The digital receiver processing module 64 and the digital transmitter processing module 76, in combination with operational instructions stored in memory 75, execute digital receiver functions and digital transmitter functions, respectively. The digital receiver functions include, but are not limited to, digital intermediate frequency to baseband conversion, demodulation, constellation demapping, descrambling, and/or decoding. The digital transmitter functions include, but are not limited to, encoding, scrambling, constellation mapping, modulation, and/or digital baseband to IF conversion. The digital receiver and transmitter processing modules 64 and 76 may be implemented using a shared processing device, individual processing devices, or a plurality of processing devices. Such a processing device may be a microprocessor, micro-controller, digital signal processor, microcomputer, central processing unit, field programmable gate array, programmable logic device, state machine, logic circuitry, analog circuitry, digital circuitry, and/or any device that manipulates signals (analog and/or digital) based on operational instructions. The memory 75 may be a single memory device or a plurality of memory devices. Such a memory device may be a read-only memory, random access memory, volatile memory, non-volatile memory, static memory, dynamic memory, flash

ZTE, Exhibit 1002-0188

memory, and/or any device that stores digital information. Note that when the processing module 64 and/or 76 implements one or more of its functions via a state machine, analog circuitry, digital circuitry, and/or logic circuitry, the memory storing the corresponding operational instructions is embedded with the circuitry comprising the state machine, analog circuitry, digital circuitry, and/or logic circuitry.

In operation, the radio 60 receives outbound data 94 from the host device via the host interface 62. The host interface 62 routes the outbound data 94 to the digital transmitter processing module 76, which processes the outbound data 94 in accordance with a particular wireless communication standard (e.g., IEEE 802.11, Bluetooth, et cetera) to produce digital transmission formatted data 96. The digital transmission formatted data 96 will be digital base-band signals (e.g., have a zero IF) or a digital low IF signals, where the low IF typically will be in the frequency range of one hundred kilohertz to a few megahertz.

The digital-to-analog converter 78 converts the digital transmission formatted data 96 from the digital domain to the analog domain. The filtering/gain module 80 filters and/or adjusts the gain of the analog signals prior to providing it to the IF mixing stage 82. The IF mixing stage 82 converts the analog baseband or low IF signals into RF signals based on a transmitter local oscillation 83 provided by local oscillation module 74. The power amplifier 84 amplifies the RF signals to produce outbound RF signals 98, which are filtered by the transmitter filter module 85. The antenna 86 transmits the outbound RF signals 98 to a targeted device such as a base station, an access point and/or another wireless communication device.

The radio 60 also receives inbound RF signals 88 via the antenna 86, which were transmitted by a base station, an access point, or another wireless communication device. The antenna 86 provides the inbound RF signals 88 to the receiver filter module 71 via the Tx/Rx switch 73, where the Rx filter 71 bandpass filters the inbound RF signals 88. The Rx filter 71 provides the filtered RF signals to low noise amplifier 72, which amplifies the signals 88 to produce an amplified inbound RF signals. The low noise

ZTE, Exhibit 1002-0189

amplifier 72 provides the amplified inbound RF signals to the IF mixing module 70, which directly converts the amplified inbound RF signals into an inbound low IF signals or baseband signals based on a receiver local oscillation 81 provided by local oscillation module 74. The down conversion module 70 provides the inbound low IF signals or baseband signals to the filtering/gain module 68. The high pass and low pass filter module 68 filters, based on settings provided by the channel bandwidth adjust module 87, the inbound low IF signals or the digital reception formatted data to produce filtered inbound signals.

The analog-to-digital converter 66 converts the filtered inbound signals from the analog domain to the digital domain to produce digital reception formatted data 90, where the digital reception formatted data 90 will be digital base-band signals or digital low IF signals, where the low IF typically will be in the frequency range of one hundred kilohertz to a few megahertz.. The digital receiver processing module 64, based on settings provided by the channel bandwidth adjust module 87, decodes, descrambles, demaps, and/or demodulates the digital reception formatted data 90 to recapture inbound data 92 in accordance with the particular wireless communication standard being implemented by radio 60. The host interface 62 provides the recaptured inbound data 92 to the host device 18-32 via the radio interface 54.

As one of average skill in the art will appreciate, the wireless communication device of Figure 2 may be implemented using one or more integrated circuits. For example, the host device may be implemented on one integrated circuit, the digital receiver processing module 64, the digital transmitter processing module 76 and memory 75 may be implemented on a second integrated circuit, and the remaining components of the radio 60, less the antenna 86, may be implemented on a third integrated circuit. As an alternate example, the radio 60 may be implemented on a single integrated circuit. As yet another example, the processing module 50 of the host device and the digital receiver and transmitter processing modules 64 and 76 may be a common processing device implemented on a single integrated circuit. Further, the memory 52 and memory 75 may be implemented on a single integrated circuit and/or on the same integrated circuit as the

ZTE, Exhibit 1002-0190

common processing modules of processing module 50 and the digital receiver and transmitter processing module 64 and 76.

Figure 3 is a schematic block diagram illustrating another embodiment of a wireless communication device that includes the host device 18-32 and an associated radio 60. For cellular telephone hosts, the radio 60 is a built-in component. For personal digital assistants hosts, laptop hosts, and/or personal computer hosts, the radio 60 may be built-in or an externally coupled component.

As illustrated, the host device 18-32 includes a processing module 50, memory 52, radio interface 54, input interface 58 and output interface 56. The processing module 50 and memory 52 execute the corresponding instructions that are typically done by the host device. For example, for a cellular telephone host device, the processing module 50 performs the corresponding communication functions in accordance with a particular cellular telephone standard.

The radio interface 54 allows data to be received from and sent to the radio 60. For data received from the radio 60 (e.g., inbound data), the radio interface 54 provides the data to the processing module 50 for further processing and/or routing to the output interface 56. The output interface 56 provides connectivity to an output display device such as a display, monitor, speakers, et cetera such that the received data may be displayed. The radio interface 54 also provides data from the processing module 50 to the radio 60. The processing module 50 may receive the outbound data from an input device such as a keyboard, keypad, microphone, et cetera via the input interface 58 or generate the data itself. For data received via the input interface 58, the processing module 50 may perform a corresponding host function on the data and/or route it to the radio 60 via the radio interface 54.

Radio 60 includes a host interface 62, a baseband processing module 100, memory 65, a plurality of radio frequency (RF) transmitters 106 - 110, a transmit/receive (T/R) module 114, a plurality of antennas 81 - 85, a plurality of RF receivers 118 - 120, a

ZTE, Exhibit 1002-0191

channel bandwidth adjust module 87, and a local oscillation module 74. The baseband processing module 100, in combination with operational instructions stored in memory 65, executes digital receiver functions and digital transmitter functions, respectively. The digital receiver functions include, but are not limited to, digital intermediate frequency to baseband conversion, demodulation, constellation demapping, decoding, de-interleaving, fast Fourier transform, cyclic prefix removal, space and time decoding, and/or descrambling. The digital transmitter functions include, but are not limited to, encoding, scrambling, interleaving, constellation mapping, modulation, inverse fast Fourier transform, cyclic prefix addition, space and time encoding, and digital baseband to IF conversion. The baseband processing modules 100 may be implemented using one or more processing devices. Such a processing device may be a microprocessor, micro-controller, digital signal processor, microcomputer, central processing unit, field programmable gate array, programmable logic device, state machine, logic circuitry, analog circuitry, digital circuitry, and/or any device that manipulates signals (analog and/or digital) based on operational instructions. The memory 65 may be a single memory device or a plurality of memory devices. Such a memory device may be a read-only memory, random access memory, volatile memory, non-volatile memory, static memory, dynamic memory, flash memory, and/or any device that stores digital information. Note that when the processing module 100 implements one or more of its functions via a state machine, analog circuitry, digital circuitry, and/or logic circuitry, the memory storing the corresponding operational instructions is embedded with the circuitry comprising the state machine, analog circuitry, digital circuitry, and/or logic circuitry.

In operation, the radio 60 receives outbound data 94 from the host device via the host interface 62. The baseband processing module 64 receives the outbound data 94 and, based on a mode selection signal 102, produces one or more outbound symbol streams 104. The mode selection signal 102 will indicate a particular mode of operation that is compliant with one or more specific modes of the various IEEE 802.11 standards. For example, the mode selection signal 102 may indicate a frequency band of 2.4 GHz, a channel bandwidth of 20 or 22 MHz and a maximum bit rate of 54 megabits-per-second. In this general category, the mode selection signal will further indicate a particular rate

ZTE, Exhibit 1002-0192

ranging from 1 megabit-per-second to 54 megabits-per-second. In addition, the mode selection signal will indicate a particular type of modulation, which includes, but is not limited to, Barker Code Modulation, BPSK, QPSK, CCK, 16 QAM and/or 64 QAM. The mode select signal 102 may also include a code rate, a number of coded bits per subcarrier (NBPSC), coded bits per OFDM symbol (NCBPS), and/or data bits per OFDM symbol (NDBPS). The mode selection signal 102 may also indicate a particular channelization for the corresponding mode that provides a channel number and corresponding center frequency. The mode select signal 102 may further indicate a power spectral density mask value and a number of antennas to be initially used for a MIMO communication.

The baseband processing module 100, based on the mode selection signal 102 produces one or more outbound symbol streams 104 from the outbound data 94. For example, if the mode selection signal 102 indicates that a single transmit antenna is being utilized for the particular mode that has been selected, the baseband processing module 100 will produce a single outbound symbol stream 104. Alternatively, if the mode select signal 102 indicates 2, 3 or 4 antennas, the baseband processing module 100 will produce 2, 3 or 4 outbound symbol streams 104 from the outbound data 94.

Depending on the number of outbound streams 104 produced by the baseband module 10, a corresponding number of the RF transmitters 106 - 110 will be enabled to up convert the outbound symbol streams 104 into outbound RF signals 112. In general, each of the RF transmitters 106 – 110 includes a digital filter and upsampling module, a digital to analog conversion module, an analog filter module, a frequency up conversion module, a power amplifier, and a radio frequency bandpass filter. The RF transmitters 106 – 110 provide the outbound RF signals 112 to the transmit/receive module 114, which provides each outbound RF signal to a corresponding antenna 81 - 85.

When the radio 60 is in the receive mode, the transmit/receive module 114 receives one or more inbound RF signals 116 via the antennas 81 – 85 and provides them to one or more RF receivers 118 - 122. The RF receiver 118 – 122, based on settings

ZTE, Exhibit 1002-0193

provided by the channel bandwidth adjust module 87, down converts the inbound RF signals 116 into a corresponding number of inbound symbol streams 124. The number of inbound symbol streams 124 will correspond to the particular mode in which the data was received. The baseband processing module 100 converts the inbound symbol streams 124 into inbound data 92, which is provided to the host device 18-32 via the host interface 62.

As one of average skill in the art will appreciate, the wireless communication device of Figure 3 may be implemented using one or more integrated circuits. For example, the host device may be implemented on one integrated circuit, the baseband processing module 100 and memory 65 may be implemented on a second integrated circuit, and the remaining components of the radio 60, less the antennas 81 - 85, may be implemented on a third integrated circuit. As an alternate example, the radio 60 may be implemented on a single integrated circuit. As yet another example, the processing module 50 of the host device and the baseband processing module 100 may be a common processing device implemented on a single integrated circuit. Further, the memory 52 and memory 65 may be implemented on a single integrated circuit and/or on the same integrated circuit as the common processing modules of processing module 50 and the baseband processing module 100.

Figure 4 is a schematic block diagram of baseband transmit processing 100-TX within the baseband processing module 100, which includes an encoding module 121, a puncture module 123, a switch, a plurality of interleaving modules 125, 126, a plurality of constellation encoding modules 128, 130, a beamforming module (V) 132, and a plurality of inverse fast Fourier transform (IFFT) modules 134, 136 for converting the outbound data 94 into the outbound symbol stream(s) 104. As one of ordinary skill in the art will appreciate, the baseband transmit processing may include two or more of each of the interleaving modules 125, 126, the constellation mapping modules 128, 130, and the IFFT modules 134, 136. In addition, one of ordinary skill in art will further appreciate that the encoding module 121, puncture module 123, the interleaving modules 124, 126, the constellation mapping modules 128, 130, and the IFFT modules 134, 136 may

ZTE, Exhibit 1002-0194

function in accordance with one or more wireless communication standards including, but not limited to, IEEE 802.11a, b, g, n.

In one embodiment, the encoding module 121 is operably coupled to convert outbound data 94 into encoded data in accordance with one or more wireless communication standards. The puncture module 123 punctures the encoded data to produce punctured encoded data. The plurality of interleaving modules 125, 126 is operably coupled to interleave the punctured encoded data into a plurality of interleaved streams of data. The plurality of constellation mapping modules 128, 130 is operably coupled to map the plurality of interleaved streams of data into a plurality of streams of data symbols. The beamforming module 132 is operably coupled to beamform, using a unitary matrix having polar coordinates, the plurality of streams of data symbols into a plurality of streams of beamformed symbols. The plurality of IFFT modules 134, 136 is operably coupled to convert the plurality of streams of beamformed symbols into a plurality of outbound symbol streams.

The beamforming module 132 is operably coupled to multiply a beamforming unitary matrix (V) with baseband signals provided by the plurality of constellation mapping modules 128, 130. The beamforming module 132 determines the beamforming unitary matrix V from feedback information from the receiver, wherein the feedback information includes a calculated expression of the beamforming matrix V having polar coordinates. The beamforming module 132 generates the beamforming unitary matrix V to satisfy the conditions of "V*V = VV* = "I", where "I" is an identity matrix of [1 0; 0 1] for 2x2 MIMO wireless communication, is [1 0 0 ;0 1 0; 0 0 1] for 3x3 MIMO wireless communication, or is [1 0 0 0; 0 1 0 0 ; 0 0 1 0; 0 0 0 1] for 4x4 MIMO wireless communication. In this equation, V*V means "conjugate (V) times V" and VV* means "V times conjugate (V)". Note that V may be a 2x2 unitary matrix for a 2x2 MIMO wireless communication, a 3x3 unitary matrix for a 3x3 MIMO wireless communication, and a 4x4 unitary matrix for a 4x4 MIMO wireless communication. Further note that for each column of V, a first row of polar coordinates including real values as references and a second row of polar coordinates including phase shift values.

ZTE, Exhibit 1002-0195

In one embodiment, the constellation mapping modules 128, 130 function in accordance with one of the IEEE 802.11x standards to provide an OFDM (Orthogonal Frequency Domain Multiplexing) frequency domain baseband signals that includes a plurality of tones, or subcarriers, for carrying data. Each of the data carrying tones represents a symbol mapped to a point on a modulation dependent constellation map. For instance, a 16 QAM (Quadrature Amplitude Modulation) includes 16 constellation points, each corresponding to a different symbol. For an OFDM signal, the beamforming module 132 may regenerate the beamforming unitary matrix V for each tone from each constellation mapping module 128, 130, use the same beamforming unitary matrix for each tone from each constellation mapping module 128, 130, or a combination thereof.

The beamforming unitary matrix varies depending on the number of transmit paths (i.e., transmit antennas - M) and the number of receive paths (i.e., receiver antennas – N) for an MxN MIMO communication. For instance, for a 2x2 MIMO communication, the beamforming unitary matrix may be:

$$V = (V)ij = \begin{bmatrix} \cos\psi_1 & \cos\psi_2 \\ \sin\psi_1 e^{j\phi_1} & \sin\psi_2 e^{j\phi_2} \end{bmatrix}$$

In order to satisfy V*V = I, it needs to satisfy followings.

$$\cos\psi_1 \cos\psi_2 + \sin\psi_1 \sin\psi_2 e^{j(\phi_1-\phi_2)} = 0$$
$$\cos\psi_1 \cos\psi_2 + \sin\psi_1 \sin\psi_2 e^{j(\phi_2-\phi_1)} = 0$$

Where i, j = 1, 2; ψ_1, Φ_1, $\psi 2$, and Φ_2 represent angles of the unit circle, wherein absolute value of $\psi_1 - \psi_2 = \pi/2$ and $\Phi_1 = \Phi_2$ or $\Phi_1 = \Phi_2 + \pi$ and $\psi_1 + \psi_2 = \pi/2$.

Therefore, with Φ_1 and ψ_1, the beamforming module 132 may regenerate V per each tone. For example, With 4-bits expression for angle Φ_1 and 3-bits for angle ψ_1, and 1-bit for the index for #1 or #2 in 54 tones, (i.e., 8-bits per tone) total feedback information may be 8x54/8 = 54bytes. (ψ in $[0, \pi]$, Φ in $[-\pi, \pi]$).

ZTE, Exhibit 1002-0196

For a 3x3 MIMO communication, the beamforming unitary matrix may be:

$$V = (V)ij = \begin{bmatrix} \cos\psi_1 & \cos\psi_2 & \cos\psi_3 \\ \sin\psi_1 \cos\theta_1 e^{j\phi_{21}} & \sin\psi_2 \cos\theta_2 e^{j\phi_{22}} & \sin\psi_3 \cos\theta_3 e^{j\phi_{23}} \\ \sin\psi_1 \sin\theta_1 e^{j\phi_{31}} & \sin\psi_2 \sin\theta_2 e^{j\phi_{32}} & \sin\psi_3 \sin\theta_3 e^{j\phi_{33}} \end{bmatrix}$$

where i, j = 1, 2, 3; ψ_1 , ψ_2 , ψ_3 , θ_1, θ_2, θ_3, Φ_{21}, Φ_{22} , Φ_{23} , Φ_{31}, Φ_{32} , Φ_{33} represent angles of the unit circle, wherein Diagonal (V*V) = 1s, and wherein:

$$\psi_i = \cos^{-1} V_{1i}, \theta_i = \cos^{-1}\left|\frac{V_{2i}}{\sin\psi_i}\right|$$
$$\phi_{2i} = \angle(V_{2i}), \phi_{3i} = \angle(V_{3i})$$

In this example, with 12 angles, the beamforming module 132 may regenerate V as a 3x3 matrix per tone. With 4-bits for expression for the angles, a 54 tone signal may have feedback information of 324 bytes (e.g., 4x12x54/8).

For a 4x4 MIMO communication, the beamforming unitary matrix may be:

$$V = (V)ij = \begin{bmatrix} \cos\psi_1 \cos\varphi_1 & \cos\psi_2 \cos\varphi_2 & \cos\psi_3 \cos\varphi_3 & \cos\psi_4 \cos\varphi_4 \\ \cos\psi_1 \sin\varphi_1 e^{j\phi_{11}} & \cos\psi_2 \sin\varphi_2 e^{j\phi_{12}} & \cos\psi_3 \sin\varphi_3 e^{j\phi_{13}} & \cos\psi_4 \sin\varphi_4 e^{j\phi_{14}} \\ \sin\psi_1 \cos\theta_1 e^{j\phi_{21}} & \sin\psi_2 \cos\theta_2 e^{j\phi_{22}} & \sin\psi_3 \cos\theta_3 e^{j\phi_{23}} & \sin\psi_4 \cos\theta_4 e^{j\phi_{24}} \\ \sin\psi_1 \sin\theta_1 e^{j\phi_{31}} & \sin\psi_2 \sin\theta_2 e^{j\phi_{32}} & \sin\psi_3 \sin\theta_3 e^{j\phi_{33}} & \sin\psi_4 \sin\theta_4 e^{j\phi_{34}} \end{bmatrix}$$

= [cos(ψ_1) cos(ψ_2); sin(ψ_1)*$e^{j\Phi 1}$ sin(ψ_2)*$e^{j\Phi 2}$], where i, j = 1, 2, 3, 4; wherein ψ_1 , ψ_2 , ψ_3 , ψ_4 , θ_1, θ_2, θ_3, θ_4, φ_1, φ_2, φ_3, φ_4, Φ_{21}, Φ_{22} , Φ_{23} , Φ_{24} , Φ_{31}, Φ_{32} , Φ_{33} , Φ_{33} , Φ_{41}, Φ_{42} , Φ_{43} , Φ_{43} represent angles of the unit circle, wherein Diagonal (V*V) = 1s, and wherein:

$$\psi_i = \cos^{-1}\left(\sqrt{|V_{1i}|^2 + |V_{2i}|^2}\right), \varphi_i = \cos^{-1}\left(\frac{V_{1i}}{\cos\psi_i}\right), \theta_i = \cos^{-1}\left|\frac{V_{3i}}{\sin\psi_i}\right|$$
$$\phi_{1i} = \angle(V_{2i}), \phi_{2i} = \angle(V_{3i}), \phi_{3i} = \angle(V_{4i})$$

ZTE, Exhibit 1002-0197

In this example, with 24 angles, the beamforming module 132 may regenerate V as a 4x4 matrix per tone. With 4-bits for expression for the angles, a 54 tone signal may have feedback information of 648 bytes (e.g., 4x24x54/8).

The baseband transmit processing 100-TX receives the polar coordinates Φ and ψ from the receiver as feedback information as will described in greater detail with reference to Figure 6.

Figure 5 is a schematic block diagram of baseband receive processing 100-RX that includes a plurality of fast Fourier transform (FFT) modules 140, 142, a beamforming (U) module 144, a plurality of constellation demapping modules 146, 148, a plurality of deinterleaving modules 150, 152, a switch, a depuncture module 154, and a decoding module 156 for converting a plurality of inbound symbol streams 124 into inbound data 92. As one of ordinary skill in the art will appreciate, the baseband receive processing 100-RX may include two or more of each of the deinterleaving modules 150, 152, the constellation demapping modules 146, 148, and the FFT modules 140, 142. In addition, one of ordinary skill in art will further appreciate that the decoding module 156, depuncture module 154, the deinterleaving modules 150, 152, the constellation decoding modules 146, 148, and the FFT modules 140, 142 may be function in accordance with one or more wireless communication standards including, but not limited to, IEEE 802.11a, b, g, n.

In one embodiment, a plurality of FFT modules 140, 142 is operably coupled to convert a plurality of inbound symbol streams 124 into a plurality of streams of beamformed symbols. The inverse beamforming module 144 is operably coupled to inverse beamform, using a unitary matrix having polar coordinates, the plurality of streams of beamformed symbols into a plurality of streams of data symbols. The plurality of constellation demapping modules is operably coupled to demap the plurality of streams of data symbols into a plurality of interleaved streams of data. The plurality of deinterleaving modules is operably coupled to deinterleave the plurality of interleaved

ZTE, Exhibit 1002-0198

streams of data into encoded data. The decoding module is operably coupled to convert the encoded data into inbound data 92.

The beamforming module 144 is operably coupled to multiply a beamforming unitary matrix (U) with baseband signals provided by the plurality of FFT modules 140, 142. The FFT modules 140, 142 function in accordance with one of the IEEE 802.11x standards to provide an OFDM (Orthogonal Frequency Domain Multiplexing) frequency domain baseband signals that includes a plurality of tones, or subcarriers, for carrying data. Each of the data carrying tones represents a symbol mapped to a point on a modulation dependent constellation map. The baseband receive processing 100-RX is further functional to produce feedback information for the transmitter as further described with reference to Figure 6.

Figure 6 is a schematic block diagram of a beamforming wireless communication where H=UDV* (H – represents the channel, U is the receiver beamforming unitary matrix, and V* is the conjugate of the transmitter beamforming unitary matrix. With H = UDV*, y (the received signal) = Hx + N, where x represents the transmitted signals and N represents noise. If z = Vx, then U*y = U*UDV*Vz + U*n = Dz + N.

From this expression, the baseband receive processing 100-RX may readily determine the feedback of V, where V includes polar coordinates. For instance, the receiver may decompose the channel using singular value decomposition (SVD) and send information relating only to a calculated value of the transmitter's beamforming matrix (V) as the feedback information. In this approach, the receiver calculates (V) based on H = UDV*, where H is the channel response, D is a diagonal matrix, and U is a receiver unitary matrix. This approach reduces the size of the feedback information with respect to SVD using Cartesian coordinates. For example, in a 2x2 MIMO wireless communication, the feedback needs four elements that are all complex values [V11 V12; V21 V22] with two angles (ψ and Φ). In general, Vik = aik + j*bik, where aik and bik are values between [-1, 1]. To cover [-1, 1], ψ is in [0, π] and Φ is in [0, 2π]. With π /2 resolutions for angles, ψ needs to be π /4 or $3\pi/4$, i.e., $\cos(\psi) = 0.707$ or -0.707, which

ZTE, Exhibit 1002-0199

requires 1 bit, where Φ needs to be either $\pi/4$, $3\pi/4$, $5\pi/4$, $7\pi/4$, i.e., $\exp(j\ \Phi) = 0.707(1+j)$, $0.707(1-j)$, $0.707(-1+j)$ or $0.707(-1-j)$, which requires 2 bits. With $\pi/4$ resolutions for angles, ψ needs to be $\pi/8$, $3\pi/8$, $5\pi/8$, or $7\pi/8$, which requires 2 bits, where Φ needs to be either $\pi/8$, $3\pi/8$, $5\pi/8$, $7\pi/8$, $9\pi/8$, $11\pi/8$, $13\pi/8$ or $15\pi/8$, which requires 4 bits. So, for an example of 2x2 system to use 4 bits per tone, it may have 1 bit for ψ, 2 bits for Φ and 1 index bit to determine the relationship between ψ and Φ, such as either $\psi 1 = \psi 2 + \pi$ and $\Phi 1 + \Phi 2 = \pi/2$, or $\psi 1 = \psi 2$ and $\Phi 1 - \Phi 2 = \pi/2$.

For the same resolution in Cartesian expression of 4 bits per each element for each of the real and imaginary components, aik and bik, can be within [- ½, ½], it requires 4*2*4 = 32 bits per tone. For OFDM MIMO wireless communications, the number of bits required is 1728 bits for the Cartesian expression. While an angle expression in accordance with the present invention requires 8 bits per tone, which for the same OFDM MIMO wireless communications would require 432 bits. This represents a significant reduction in the overhead needed for packet exchange.

Figure 7 is a flow chart illustrating another embodiment of the present invention for providing beamforming feedback information from a receiver to a transmitter. The method 700 in particular addresses the feed back of observed transmitter beamforming information from a receiving wireless communication device to a transmitting wireless communication device. The method 700 of Figure 7 relates to MIMO wireless communication systems, among others. Most of the operations 700 of Figure 7 are typically performed by a baseband processing module, e.g., 100 of FIG. 3 of a receiving wireless device.

The method 700 commences with the receiving wireless communication device receiving a preamble sequence from the transmitting wireless device and estimating a channel response from the preamble sequence (step 702). Estimating the channel response includes comparing received training symbols of the preamble to corresponding expected training symbols using any of a number of techniques that are known in the art. The receiving wireless device then determines an estimated transmitter beamforming

ZTE, Exhibit 1002-0200

unitary matrix (V) based upon the channel response and a known receiver beamforming unitary matrix (U) (step 704). The channel response (H), estimated transmitter beamforming unitary matrix (V), and the known receiver beamforming unitary matrix (U) are related by the equation H = UDV*, where, D is a diagonal matrix. Singular Value Decomposition (SVD) operations may be employed to produce the estimated transmitter beamforming unitary matrix (V) according to this equation.

According to the embodiment of Figure 7, the receiving wireless device produces the estimated transmitter beamforming unitary matrix (V) in Cartesian coordinates and then converts the estimated transmitter beamforming unitary matrix (V) to polar coordinates (step 706). With the estimated transmitter beamforming unitary matrix (V) determined, the receiving wireless device then decomposes the estimated transmitter beamforming unitary matrix (V) to produce the transmitter beamforming information (step 708).

According to one embodiment of this operation, the decomposition operations of step 708 employ a Givens Rotation operation. The Givens Rotation relies upon the observation that, with the condition of V*V = VV* = I, some of angles of the Givens Rotation are redundant. With a decomposed matrix form for the estimated transmitter beamforming matrix (V), the set of angles fed back to the transmitting wireless device are reduced.

Operation continues with the receiving wireless device wirelessly sending the transmitter beamforming information to the transmitting wireless device (step 710). This operation occurs with the receiving wireless device shifting to a transmit mode and sending the information back to the transmitting wireless device. The transmitting wireless device then uses the feedback components to generate a new beamforming matrix (V), which it uses for subsequent transmissions (step 712).

Figure 8 is a flow chart illustrating another embodiment of the present invention for providing beamforming feedback information from a receiver to a transmitter. The

ZTE, Exhibit 1002-0201

operations 800 of Figure 8 are similar to the operations 700 of Figure 7 and would typically be performed by a baseband processing module, e.g., 100 of FIG. 3 of a receiving wireless device.

The method 800 commences with the receiving wireless communication device receiving a preamble sequence from the transmitting wireless device and estimating a channel response (H) from the preamble sequence (step 802). Techniques similar/same as those described with reference to step 702 of Figure 7 may be employed.

The receiving wireless device then decomposes the channel response (H) based upon the receiver beamforming unitary matrix (U) to produce an estimated transmitter beamforming unitary matrix (V) (step 804). With the estimated transmitter beamforming unitary matrix (V) determined, the receiving wireless device then decomposes the estimated transmitter beamforming unitary matrix (V) using a Givens Rotation to produce the transmitter beamforming information (step 806). The products of this Givens Rotation are the transmitter beamforming information.

Operation continues with the receiving wireless device wirelessly sending the transmitter beamforming information to the transmitting wireless device (step 808). This operation occurs with the receiving wireless device shifting to a transmit mode and sending the transmitter beamforming information to the transmitting wireless device. The transmitting wireless device then uses the feedback components to generate a new beamforming matrix (V), which it uses for subsequent transmissions (step 810).

One example of a Givens Rotation matrix that may be used for the decomposition operations of step 806 (and step 708) is:

$$G_l(\psi)=\begin{bmatrix} I_{l-1} & 0 & 0 & 0 \\ 0 & \cos\psi & \sin\psi & 0 \\ 0 & -\sin\psi & \cos\psi & 0 \\ 0 & 0 & 0 & I_{N-l-1} \end{bmatrix}$$

ZTE, Exhibit 1002-0202

With this form, the Givens Rotation matrix rotates M [I,j],[I,j] to make (i,j-1)th component zero, where M [I,j],[I,j] is 2x2 block matrix at ith, jth row and ith, jth column.

Applying the Givens Rotation to the 2x2 estimated transmitter beamforming matrix (V) described above, for a particular form of the Givens Rotation, ψ in [0, $\pi/2$], ϕ in [$-\pi$, π] the 2x2 estimated transmitter beamforming matrix (V) can be rewritten as:

$$V = \begin{bmatrix} \cos\psi_1 & \cos(\frac{\pi}{2}-\psi_1) \\ \sin\psi_1 e^{j(\pi+\phi_2)} & \sin(\frac{\pi}{2}-\psi_1)e^{j\phi_2} \end{bmatrix}$$
$$= \begin{bmatrix} 1 & 0 \\ 0 & e^{j\phi} \end{bmatrix} \begin{bmatrix} \cos\psi & \sin\psi \\ -\sin\psi & \cos\psi \end{bmatrix}$$

With angle resolution of $\pi/2^a$, where a = # of bits per angle, the total number of bits per tone is (a-1) + (a+1) = 2a. With the 2x2 estimated transmitter beamforming matrix (V), ψ needs (a-1) bits to cover [0, $\pi/2$] and ϕ needs (a+1) bits to cover [$-\pi$, π]. With this notation: 'a=1' means quantized angle is either [$\pi/4$, $3\pi/4$] to cover [0, π] with angle resolution of $\pi/2$; and 'a=2' means quantized angle is either [$\pi/8$, $3\pi/8$, $5\pi/8$, $7\pi/8$] to cover [0, π] with angle resolution of $\pi/4$.

By using all combinations of the Givens Rotation, these concepts may be extended to an NxM matrix. Because the Givens Rotation needs real values, a phase matrix Di is applied before the Givens Rotation to yield:

$$V = \prod_{i=1}^{M} \left[D_i \left(1_{i-1} \quad e^{j\phi_{ii}} \quad \ldots \quad e^{j\phi_{iN}}\right) \prod_{j=i}^{N-1} G_j\left(\psi_{i,j}\right) \right] \times \tilde{I}_{NxM}$$

Where:

D_i is an NxN diagonal matrix with diagonal components in arguments.

I_{NxM} is an NxM identity matrix, where $(I)_{ii} = 1$ for i=1,..., min(M,N).

ZTE, Exhibit 1002-0203

As the reader will appreciate, the coefficients of the Givens Rotation and the phase matrix coefficients serve as the transmitter beamforming information that is sent from the receiving wireless communication device to the transmitting wireless communication device. For a 3x3 estimated transmitter beamforming matrix (V), from Givens Rotation, six angles in total (ϕ_{22}, ϕ_{23}, ϕ_{33}, ψ_{12}, ψ_{13}, ψ_{23}) are required. With angle resolution of $\pi/2^a$, where a = # of bits per angle, the total number of bits per tone is 3(a-1)+3(a+1) = 6a. In such case, ψ needs (a-1) bits to cover [0, π /2] and ϕ needs (a+1) bits to cover [-π, π] . Using this polar coordinates embodiment, 24 bits per sub carrier are required to achieve equivalent full resolution performance to a Cartesian coordinates solution, which requires 72 bits per sub carrier.

For a 4x4 estimated transmitter beamforming matrix (V), from Givens Rotation, twelve angles in total (ϕ_{22}, ϕ_{23}, ϕ_{24}, ϕ_{33}, ϕ_{34}, ϕ_{44}, ψ_{12}, ψ_{13}, ψ_{23}, ψ_{23}, ψ_{24}, ψ_{33}) are required. With angle resolution of $\pi/2^a$, where a = # of bits per angle, the total number of bits per tone is 6(a-1)+6(a+1) = 12a. In such case, ψ needs (a-1) bits to cover [0, π /2] and ϕ needs (a+1) bits to cover [-π, π] . Using this polar coordinates embodiment, 48 bits per sub carrier are required to achieve equivalent full resolution performance to a Cartesian coordinates solution, which requires 128 bits per sub carrier.

Using these techniques, for a simple case of 2x2 system with 20MHz BW, the feedback of transmitter beamforming information requires 10*52/8=65 bytes. For the worst case of 4x4 system with 40MHz BW (108 tones), the feedback requires 48*108/8=648 bytes. Efficiencies can be further obtained by using the correlation property of adjacent tones. (e.g., sending one information per every three tones). However, with a slowly fading channel, frequent channel feedback is not required.

The preceding discussion has presented a method and apparatus for reducing feedback information for beamforming in a wireless communication by using polar coordinates. As one of average skill in the art will appreciate, other embodiments may be derived from the present teachings without deviating from the scope of the claims.

ZTE, Exhibit 1002-0204

CLAIMS

What is claimed is:

1. A method for feeding back transmitter beamforming information from a receiving wireless communication device to a transmitting wireless communication device, the method comprising:

the receiving wireless communication device receiving a preamble sequence from the transmitting wireless device;

the receiving wireless device estimating a channel response based upon the preamble sequence;

the receiving wireless device determining an estimated transmitter beamforming unitary matrix (V) based upon the channel response and a receiver beamforming unitary matrix (U);

the receiving wireless device decomposing the estimated transmitter beamforming unitary matrix (V) to produce the transmitter beamforming information; and

the receiving wireless device wirelessly sending the transmitter beamforming information to the transmitting wireless device.

2. The method of claim 1 wherein the receiving wireless device determining an estimated transmitter beamforming unitary matrix (V) based upon the channel response and a receiver beamforming unitary matrix (U) comprises:

the receiving wireless device producing the estimated transmitter beamforming unitary matrix (V) in Cartesian coordinates; and

the receiving wireless device converting the estimated transmitter beamforming unitary matrix (V) to polar coordinates.

ZTE, Exhibit 1002-0205

3. The method of claim 1 wherein the channel response (H), estimated transmitter beamforming unitary matrix (V), and the receiver beamforming unitary matrix (U) are related by the equation:

H = UDV*

where, D is a diagonal matrix.

4. The method of claim 3, wherein the receiving wireless device determining an estimated transmitter beamforming unitary matrix (V) based upon the channel response and a receiver beamforming unitary matrix (U) comprises performing a Singular Value Decomposition (SVD) operation.

5. The method of claim 1, wherein the receiving wireless device decomposing the estimated transmitter beamforming unitary matrix (V) to produce the transmitter beamforming information comprises the receiving wireless device decomposing the estimated transmitter beamforming unitary matrix (V) using a QR decomposition technique.

6. The method of claim 5, wherein the QR decomposition technique comprises a Givens Rotation operation performed according to the equation:

$$V = \prod_{i=1}^{M}\left[D_i\left(1_{i-1} \quad e^{j\phi_{ii}} \quad \ldots \quad e^{j\phi_{iN}}\right)\prod_{j=i}^{N-1} G_j\left(\psi_{i,j}\right)\right] \times \tilde{I}_{NxM}$$

Where:

D_i is an NxN diagonal matrix with diagonal components in arguments;

I_{NxM} is an NxM identity matrix, where $(I)_{ii} = 1$ for i=1,…, min(M,N); and

wherein the transmitter beamforming information includes angles corresponding to elements of the diagonal matrix D and elements of the Givens Rotation.

7. The method of claim 1, wherein:

the transmitting wireless device transmits on N antennas; and

the receiving wireless device receives on M antennas.

ZTE, Exhibit 1002-0206

8. The method of claim 1, wherein at least one of the transmitting wireless device and the receiving wireless device supports Multiple Input Multiple Output (MIMO) operations.

9. A wireless communication device comprising:

a plurality of Radio Frequency (RF) components operable to receive an RF signal and to convert the RF signal to a baseband signal; and

a baseband processing module operable to:

receive a preamble sequence carried by the baseband signal;

estimate a channel response based upon the preamble sequence;

determine an estimated transmitter beamforming unitary matrix (V) based upon the channel response and a receiver beamforming unitary matrix (U);

decompose the estimated transmitter beamforming unitary matrix (V) to produce the transmitter beamforming information; and

form a baseband signal employed by the plurality of RF components to wirelessly send the transmitter beamforming information to the transmitting wireless device.

10. The wireless communication device of claim 9, wherein in determining an estimated transmitter beamforming unitary matrix (V) based upon the channel response and a receiver beamforming unitary matrix (U), the baseband processing module is operable to:

produce the estimated transmitter beamforming unitary matrix (V) in Cartesian coordinates; and

convert the estimated transmitter beamforming unitary matrix (V) to polar coordinates.

ZTE, Exhibit 1002-0207

11. The wireless communication device of claim 9, wherein the channel response (H), estimated transmitter beamforming unitary matrix (V), and the receiver beamforming unitary matrix (U) are related by the equation:

$H = UDV^*$

where, D is a diagonal matrix.

12. The wireless communication device of claim 9, wherein in determining the estimated transmitter beamforming unitary matrix (V) based upon the channel response and the receiver beamforming unitary matrix (U), the baseband processing module performs Singular Value Decomposition (SVD) operations.

13. The wireless communication device of claim 9, wherein in decomposing the estimated transmitter beamforming unitary matrix (V) to produce the transmitter beamforming information, the baseband processing module decomposes the estimated transmitter beamforming unitary matrix (V) using a QR decomposition technique.

14. The wireless communication device of claim 13, wherein the QR decomposition technique comprises a Givens Rotation operation performed according to the equation:

$$V = \prod_{i=1}^{M}\left[D_i\left(1_{i-1} \quad e^{j\phi_{ii}} \quad \ldots \quad e^{j\phi_{iN}}\right)\prod_{j=i}^{N-1} G_j\left(\psi_{i,j}\right)\right] \times \tilde{I}_{NxM}$$

Where:

D_i is an NxN diagonal matrix with diagonal components in arguments;

I_{NxM} is an NxM identity matrix, where $(I)_{ii} = 1$ for i=1,..., min(M,N); and

wherein the transmitter beamforming information includes angles corresponding to elements of the diagonal matrix D and elements of the Givens Rotation.

15. The wireless communication device of claim 10, wherein:

the transmitting wireless device transmits on N antennas; and

the wireless communication device includes M antennas.

ZTE, Exhibit 1002-0208

16. The wireless communication device of claim 10, wherein the wireless communication device supports Multiple Input Multiple Output (MIMO) operations.

17. A method for feeding back transmitter beamforming information from a receiving wireless communication device to a transmitting wireless communication device, the method comprising:

the receiving wireless communication device receiving a preamble sequence from the transmitting wireless device;

the receiving wireless device estimating a channel response based upon the preamble sequence;

the receiving wireless device decomposing the channel response based upon the channel response and a receiver beamforming unitary matrix (U) to produce an estimated transmitter beamforming unitary matrix (V);

the receiving wireless device decomposing the estimated transmitter beamforming unitary matrix (V) to produce the transmitter beamforming information; and

the receiving wireless device wirelessly sending the transmitter beamforming information to the transmitting wireless device.

18. The method of claim 17, wherein the receiving wireless device decomposing the channel response based upon the channel response and a receiver beamforming unitary matrix (U) to produce an estimated transmitter beamforming unitary matrix (V) includes performing a Singular Value Decomposition (SVD) operation.

ZTE, Exhibit 1002-0209

19. The method of claim 17, wherein the receiving wireless device decomposing the estimated transmitter beamforming unitary matrix (V) to produce the transmitter beamforming information comprises the receiving wireless device decomposing the estimated transmitter beamforming unitary matrix (V) using a Givens Rotation operation performed according to the equation:

$$V = \prod_{i=1}^{M}\left[D_i\left(1_{i-1} \quad e^{j\phi_{ii}} \quad \ldots \quad e^{j\phi_{iN}}\right)\prod_{j=i}^{N-1} G_j\left(\psi_{i,j}\right)\right] \times \tilde{I}_{NxM}$$

Where:

D_i is an NxN diagonal matrix with diagonal components in arguments;

I_{NxM} is an NxM identity matrix, where $(I)_{ii} = 1$ for i=1,..., min(M,N); and

wherein the transmitter beamforming information includes angles corresponding to elements of the diagonal matrix D and elements of the Givens Rotation.

20. The method of claim 19, wherein the transmitter beamforming information comprises element values of the diagonal matrix D and element values of the Givens Rotation matrix.

ZTE, Exhibit 1002-0210

ABSTRACT OF THE DISCLOSURE

A method for feeding back transmitter beamforming information from a receiving wireless communication device to a transmitting wireless communication device includes a receiving wireless communication device receiving a preamble sequence from the transmitting wireless device. The receiving wireless device estimates a channel response based upon the preamble sequence and then determines an estimated transmitter beamforming unitary matrix based upon the channel response and a receiver beamforming unitary matrix. The receiving wireless device then decomposes the estimated transmitter beamforming unitary matrix to produce the transmitter beamforming information and then wirelessly sends the transmitter beamforming information to the transmitting wireless device. The receiving wireless device may transform the estimated transmitter beamforming unitary matrix using a QR decomposition operation such as a Givens Rotation operation to produce the transformer beamforming information.

ZTE, Exhibit 1002-0211

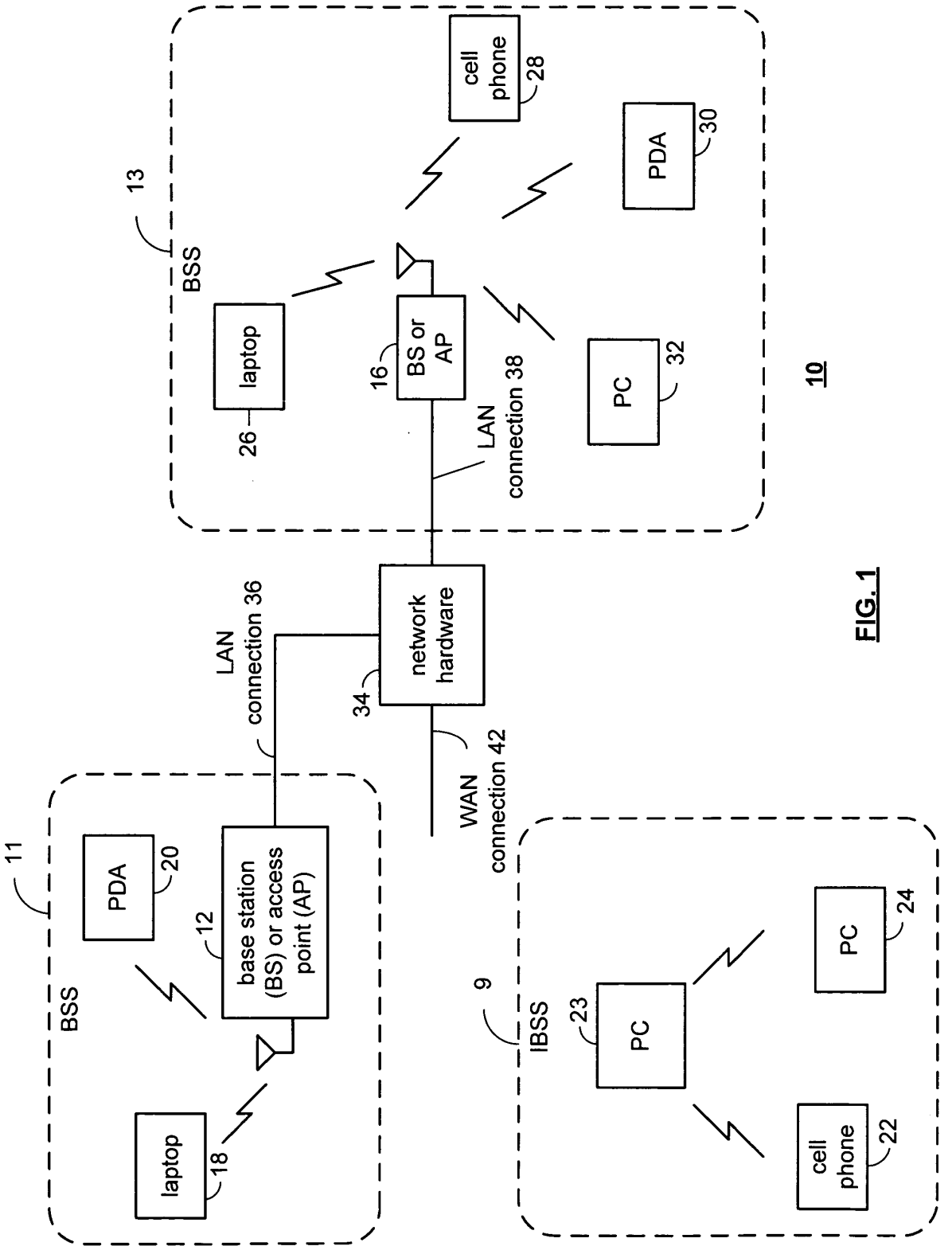
BSS
13
cell phone
28
PDA
30
laptop
26
BS or AP
16
PC
32
LAN connection 38
10
network hardware
34
LAN connection 36
WAN connection 42
11
PDA
20
base station (BS) or access point (AP)
12
BSS
laptop
18
9
IBSS
PC
23
PC
24
cell phone
22

FIG. 1

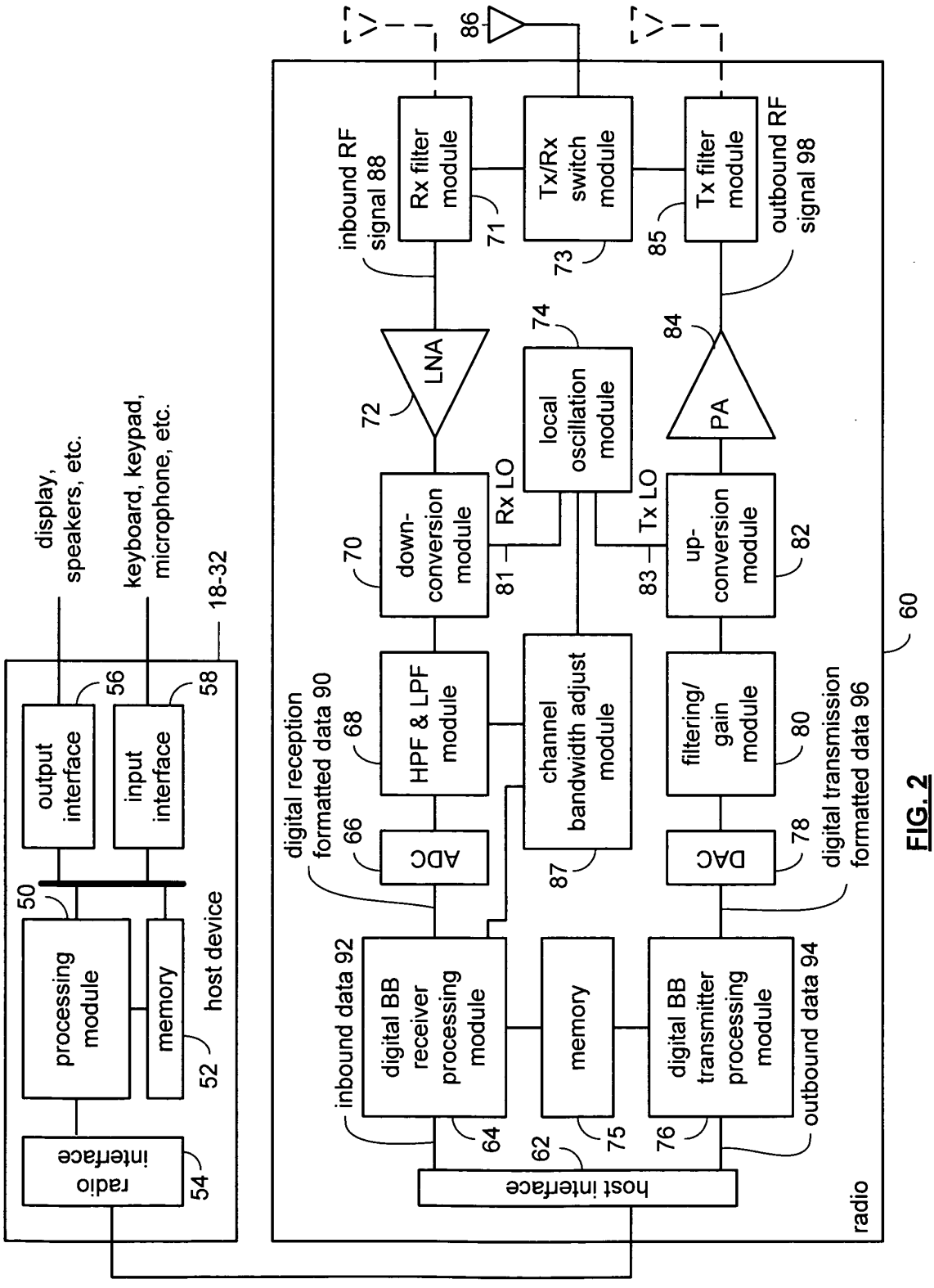
display, speakers, etc.
keyboard, keypad, microphone, etc.
18-32
output interface
56
input interface
58
50
processing module
memory
52
host device
radio interface
54
radio
60
inbound RF signal 88
Rx filter module
71
Tx/Rx switch module
73
Tx filter module
85
outbound RF signal 98
86
LNA
72
local oscillation module
74
PA
84
down-conversion module
70
Rx LO
81
Tx LO
83
up-conversion module
82
digital reception formatted data 90
HPF & LPF module
68
channel bandwidth adjust module
filtering/ gain module
80
ADC
66
87
DAC
78
digital transmission formatted data 96
inbound data 92
digital BB receiver processing module
64
memory
62
75
digital BB transmitter processing module
76
outbound data 94
host interface

FIG. 2

FIG. 3

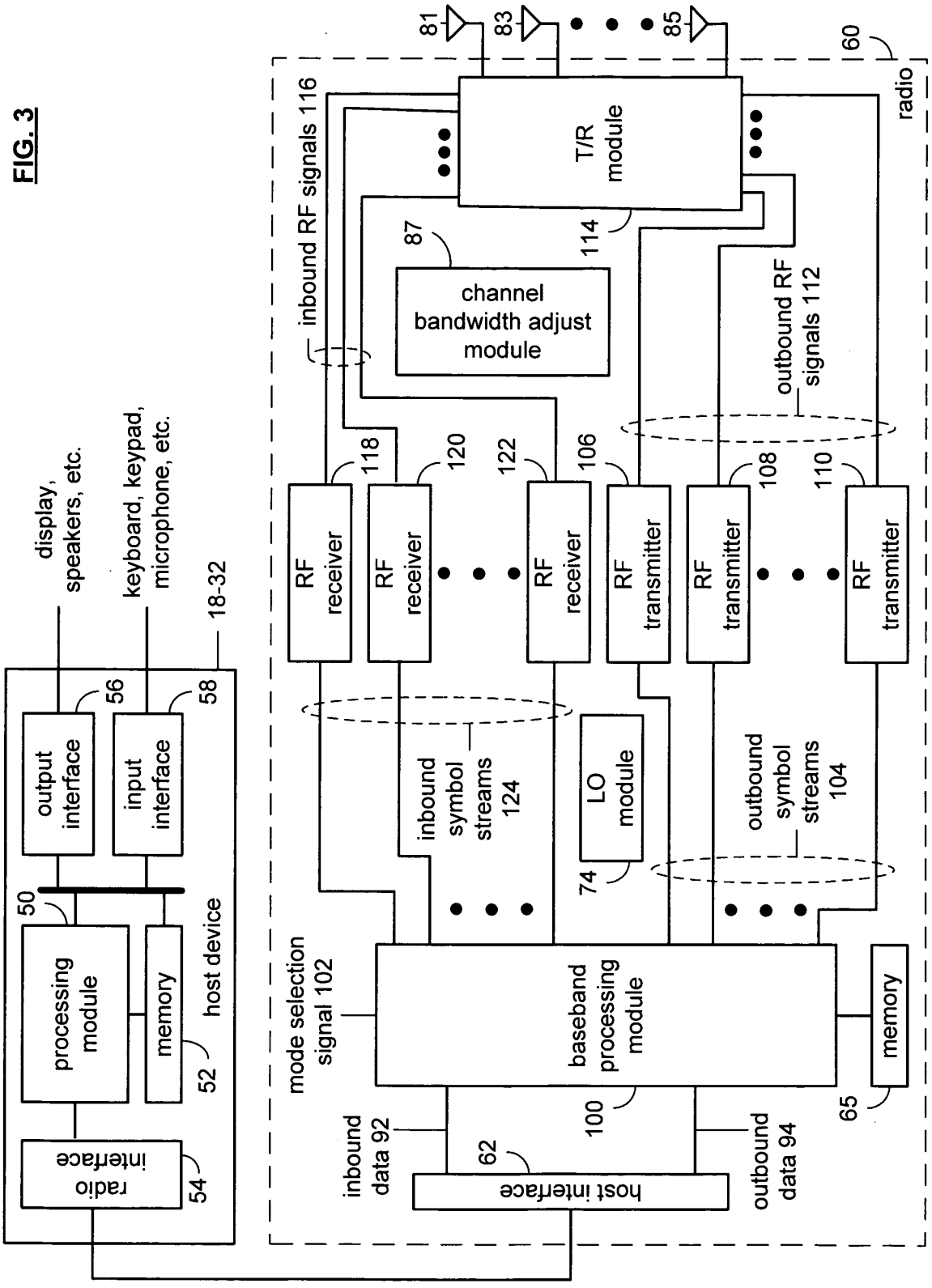
host device
18-32
display, speakers, etc.
keyboard, keypad, microphone, etc.
output interface
input interface
processing module
memory
radio interface
radio
T/R module
channel bandwidth adjust module
inbound RF signals 116
outbound RF signals 112
RF receiver
RF transmitter
LO module
inbound symbol streams 124
outbound symbol streams 104
mode selection signal 102
baseband processing module
memory
host interface
inbound data 92
outbound data 94
81
83
85
87
114
118
120
122
106
108
110
56
58
50
52
54
74
100
62
65
60

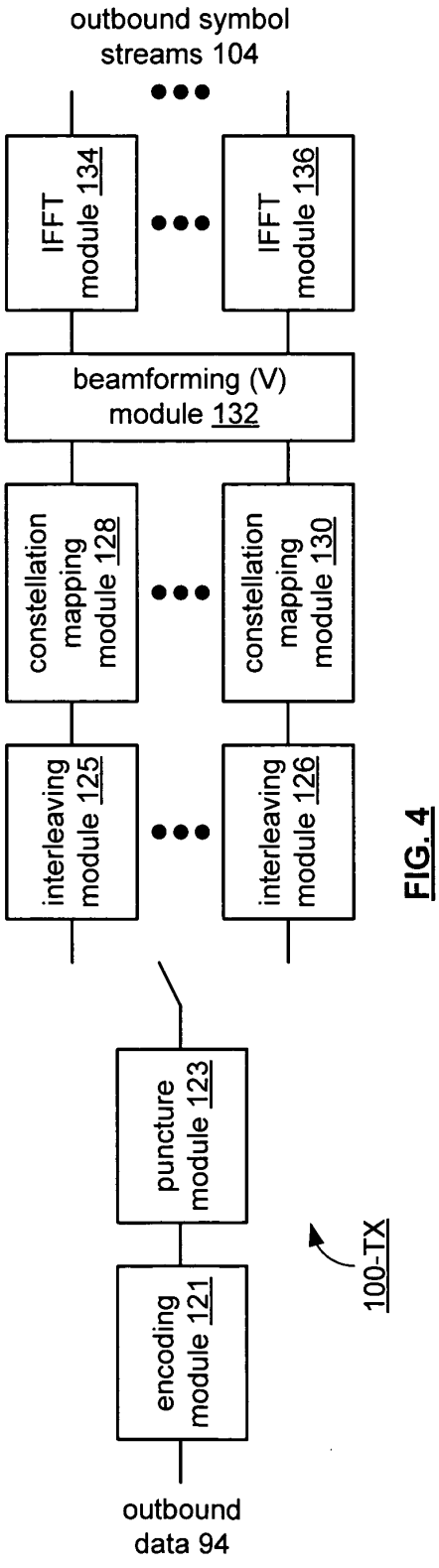
outbound symbol streams 104
IFFT module 134
IFFT module 136
beamforming (V) module 132
constellation mapping module 128
constellation mapping module 130
interleaving module 125
interleaving module 126
puncture module 123
encoding module 121
100-TX
outbound data 94

FIG. 4

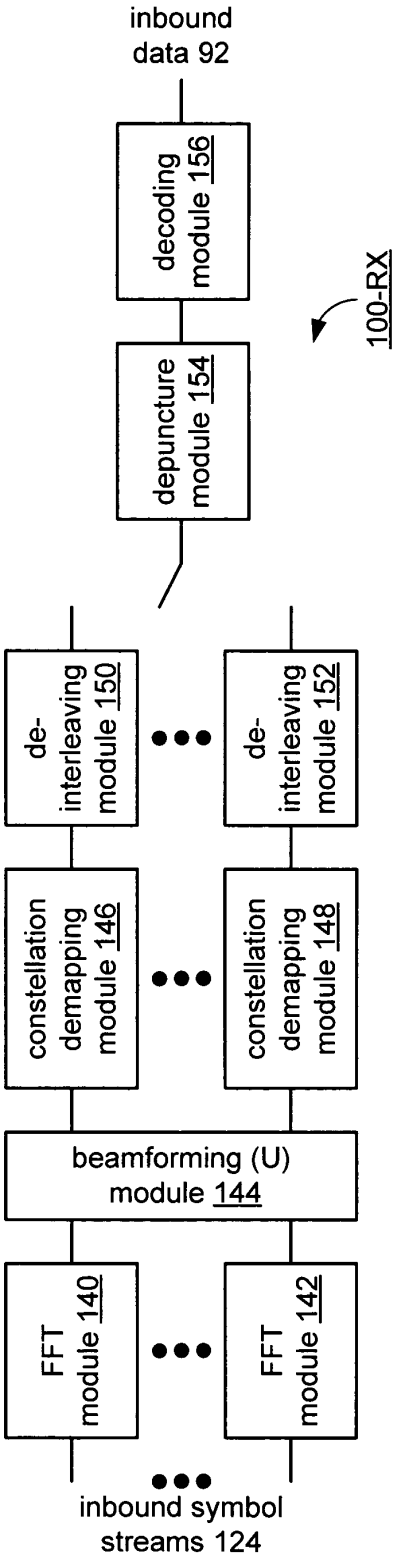
inbound data 92
decoding module 156
100-RX
depuncture module 154
de-interleaving module 150
de-interleaving module 152
constellation demapping module 146
constellation demapping module 148
beamforming (U) module 144
FFT module 140
FFT module 142
inbound symbol streams 124

FIG. 5

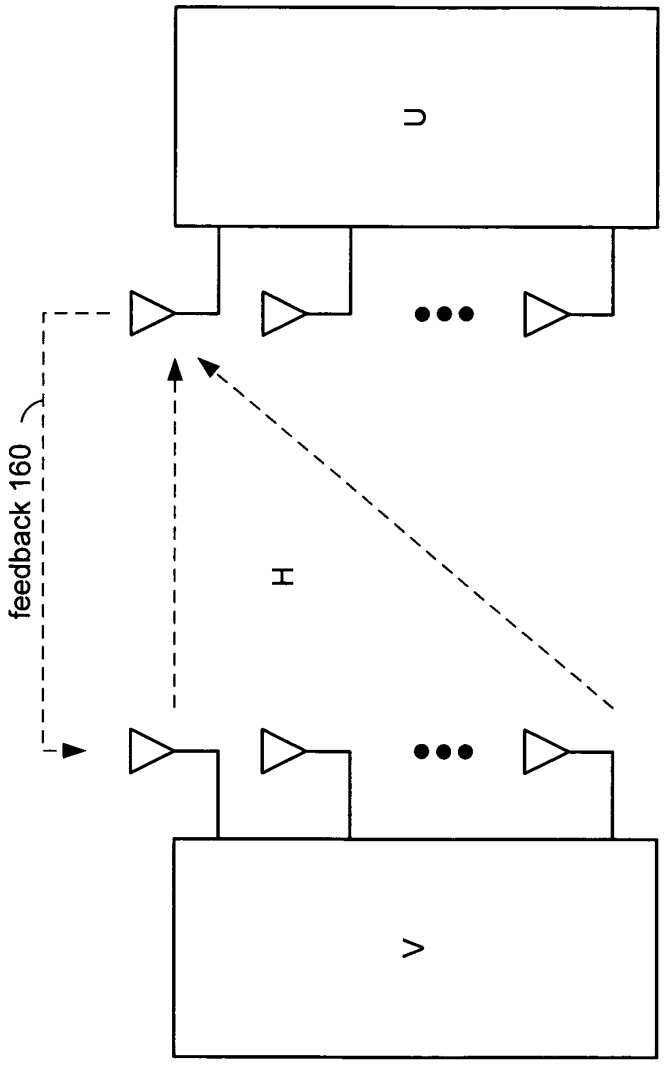

FIG. 6

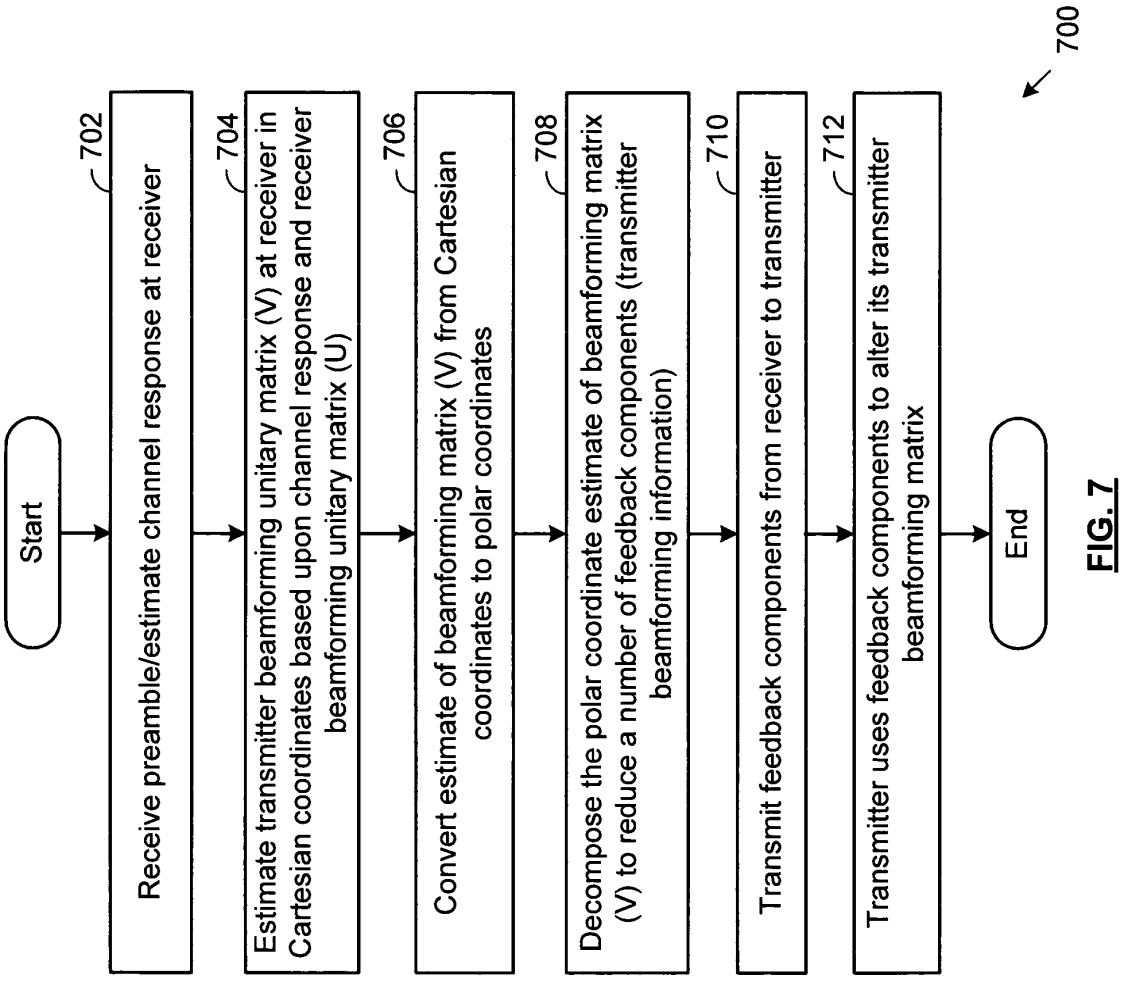
700
Start
702
Receive preamble/estimate channel response at receiver
704
Estimate transmitter beamforming unitary matrix (V) at receiver in Cartesian coordinates based upon channel response and receiver beamforming unitary matrix (U)
706
Convert estimate of beamforming matrix (V) from Cartesian coordinates to polar coordinates
708
Decompose the polar coordinate estimate of beamforming matrix (V) to reduce a number of feedback components (transmitter beamforming information)
710
Transmit feedback components from receiver to transmitter
712
Transmitter uses feedback components to alter its transmitter beamforming matrix
End

FIG. 7

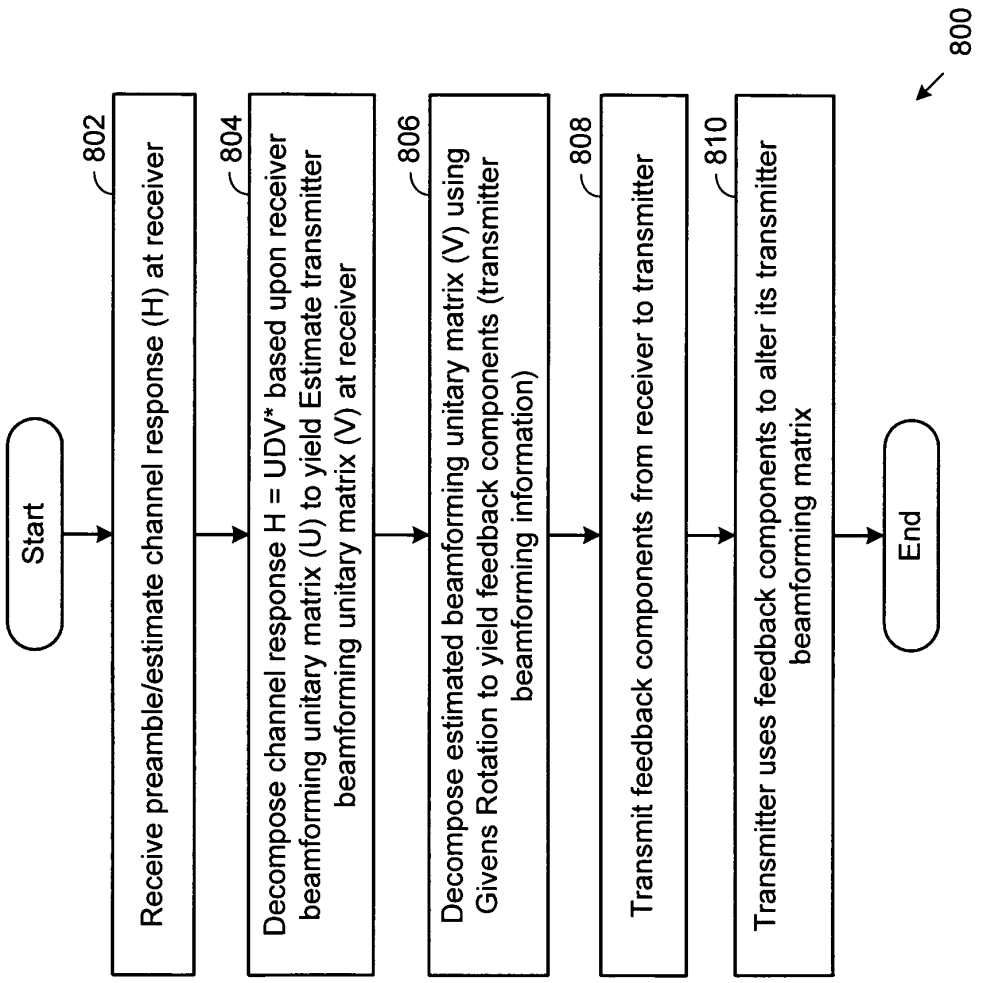
800
Start
802
Receive preamble/estimate channel response (H) at receiver
804
Decompose channel response H = UDV* based upon receiver beamforming unitary matrix (U) to yield Estimate transmitter beamforming unitary matrix (V) at receiver
806
Decompose estimated beamforming unitary matrix (V) using Givens Rotation to yield feedback components (transmitter beamforming information)
808
Transmit feedback components from receiver to transmitter
810
Transmitter uses feedback components to alter its transmitter beamforming matrix
End

FIG. 8

Please type a plus sign (+) inside this box ——— [+]

PTO/SB/01 (10_00)
Approved for use through 10/31/2002. OMB 0651-0035
U.S. Patent and Trademark Office: U.S. DEPARTMENT OF COMMERCE
Under the Paperwork Reduction Act of 1995, no persons are required to respond to a collection of information unless it displays a valid OMB control number.

DECLARATION FOR UTILITY OR DESIGN PATENT APPLICATION (37 CFR 1.63)

[X] Declaration Submitted with Initial Filing OR [ ] Declaration Submitted after initial Filing (surcharge (37 CFR 1.16(e)) required)

Attorney Docket Number	BP4880
First Named Inventor	Carlos Aldana
COMPLETE IF KNOWN	
Application Number	
Filing Date	
Group Art Unit	
Examiner Name	

As a below named inventor, I hereby declare that:

My residence, mailing address, and citizenship are as stated below next to my name.

I believe I am the original, first and sole inventor (if only one name is listed below) or an original, first and joint inventor (if plural names are listed below) of the subject matter which is claimed and for which a patent is sought on the invention entitled:

EFFICIENT FEEDBACK OF CHANNEL INFORMATION IN A CLOSED LOOP BEAMFORMING WIRELESS COMMUNICATION SYSTEM

(Title of the Invention)

the specification of which [X] is attached hereto

OR

[ ] was filed on (MM/DD/YYYY) [ ] as United States Application Number or PCT International Application Number [ ] and was amended on (MM/DD/YYYY) [ ] (if applicable).

I hereby state that I have reviewed and understand the contents of the above identified specification, including the claims, as amended by any amendment specifically referred to above.

I acknowledge the duty to disclose information which is material to patentability as defined in 37 CFR 1.56, including for continuation-in-part applications, material information which became available between the filing date of the prior application and the national or PCT international filing date of the continuation-in-part application.

I hereby claim foreign priority benefits under 35 U.S.C. 119(a)-(d) or 365(b) of any foreign application(s) for patent or inventor's certificate, or 365(a) of any PCT international application which designated at least one country other than the United States of America, listed below and have also identified below, by checkign the box, any foreign application for patent or inventor's certificate, or any PCT international application having a filing date before that of the application on which priority is claimed.

Prior Foreign Applications Numbers(s)	Country	Foreign Filing Date (MM/DD/YYYY)	Priority Not Claimed	Certified Copy Attached? YES	NO
			[ ]	[ ]	[ ]
			[ ]	[ ]	[ ]

[ ] Additional foreign application numbers are listed on a supplemental priority data sheet PTO/SB/02B attached hereto:

I hereby claim the benefit under 35 U.S.C. 119 (e), 120, or 365 (c) of any U.S. or PCT application(s) listed below.

Application Numbers(s)	Filing Date (MM/DD/YYYY)	
60/698,686	7/13/2005	[ ] Additional application numbers are listed on a supplemental priority data sheet PTO/SB/02B attached hereto.

SEND TO: Assistant Commissioner for Patents, Washington, DC 20231

BEST AVAILABLE COPY

Please type a plus sign (+) inside this box —— +

PTO/SB/01 (10_00)
Approved for use through 10/31/2002. OMB 0651-0035
U.S. Patent and Trademark Office: U.S. DEPARTMENT OF COMMERCE

Under the Paperwork Reduction Act of 1995, no persons are required to respond to a collection of information unless it displays a valid OMB control number.

DECLARATION - Utility or Design Patent Application

Direct all correspondence to: [X] Customer Number or Bar Code Label 51,472 OR [ ] Correspondence address below

Name	Bruce E. Garlick		
Address	P. O. Box 160727		
Address			
City	Austin	State Texas	ZIP 78716-0727
Country	USA	Telephone (512) 264-8816	FAX (512) 264-3735

I hereby declare that all statements made herein of my own knowledge are true and that all statements made on information and belief are believed to be true; and further that these statements were made with the knowledge that willful false statements and the like so made are punishable by fine or imprisonment, or both, under 18 U.S.c. 1001 and that such willful false statements may jeorpardize the validity of the application or any patent issued thereon.

NAME OF SOLE OR FIRST INVENTOR: [ ] A petition has been filed for this unsigned inventor

Given Name (first and middle [if any])	Carlos	Family Name or Surname	Aldana
Inventor's Signature		Date	9/26/05
Residence: City	San Francisco	State CA	Country USA
Citizenship	USA		
Mailing Address	2 Townsend St. #4-324		
Mailing Address			
City	San Francisco	State CA	ZIP 94107
Country	USA		

NAME OF SECOND INVENTOR: [ ] A petition has been filed for this unsigned inventor

Given Name (first and middle [if any])	Joonsuk	Family Name or Surname	Kim
Inventor's Signature		Date	9/26/05
Residence: City	San Jose	State CA	Country USA
Citizenship	South Korea		
Mailing Address	1046 Jacqueline Way		
Mailing Address			
City	San Jose	State CA	ZIP 95129
Country	USA		

[ ] Additional inventors are being named on the ____ supplemental Additional Inventor(s) sheets(s) PTO/SB/02A attached hereto.

BEST AVAILABLE COPY

PTO/SB/06 (12-04)
Approved for use through 7/31/2006. OMB 0651-0032
U.S. Patent and Trademark Office: U.S. DEPARTMENT OF COMMERCE

Under the Paperwork Reduction Act of 1995, no persons are required to respond to a collection of information unless it displays a valid OMB control number.

PATENT APPLICATION FEE DETERMINATION RECORD

Substitute for Form PTO-875 Effective December 8, 2004

Application or Docket Number: 11237341

APPLICATION AS FILED – PART I

FOR	(Column 1) NUMBER FILED	(Column 2) NUMBER EXTRA	SMALL ENTITY RATE ($)	SMALL ENTITY FEE ($)	OR	OTHER THAN SMALL ENTITY RATE ($)	OTHER THAN SMALL ENTITY FEE ($)
BASIC FEE (37 CFR 1.16(a), (b), or (c))	N/A	N/A	N/A	150.00		N/A	300.00
SEARCH FEE (37 CFR 1.16(k), (l), or (m))	N/A	N/A	N/A	$250		N/A	$500
EXAMINATION FEE (37 CFR 1.16(o), (p), or (q))	N/A	N/A	N/A	$100		N/A	$200
TOTAL CLAIMS (37 CFR 1.16(i))	20 minus 20 =	* 0	X$ 25 =		OR	X$50 =	
INDEPENDENT CLAIMS (37 CFR 1.16(h))	3 minus 3 =	* 0	X100 =			X200 =	
APPLICATION SIZE FEE (37 CFR 1.16(s))	If the specification and drawings exceed 100 sheets of paper, the application size fee due is $250 ($125 for small entity) for each additional 50 sheets or fraction thereof. See 35 U.S.C. 41(a)(1)(G) and 37 CFR 1.16(s).						
MULTIPLE DEPENDENT CLAIM PRESENT (37 CFR 1.16(j))			+180=			+360=	
* If the difference in column 1 is less than zero, enter "0" in column 2.			TOTAL			TOTAL	1000

APPLICATION AS AMENDED – PART II

AMENDMENT A		(Column 1) CLAIMS REMAINING AFTER AMENDMENT		(Column 2) HIGHEST NUMBER PREVIOUSLY PAID FOR	(Column 3) PRESENT EXTRA	SMALL ENTITY RATE ($)	SMALL ENTITY ADDITIONAL FEE ($)	OR	OTHER THAN SMALL ENTITY RATE ($)	OTHER THAN SMALL ENTITY ADDITIONAL FEE ($)
	Total (37 CFR 1.16(i))	*	Minus	**	=	X$ 25 =		OR	X$50 =	
	Independent (37 CFR 1.16(h))	*	Minus	***	=	X100 =		OR	X200 =	
	Application Size Fee (37 CFR 1.16(s))									
	FIRST PRESENTATION OF MULTIPLE DEPENDENT CLAIM (37 CFR 1.16(j))					+180=		OR	+360=	
						TOTAL ADD'L FEE		OR	TOTAL ADD'L FEE	

AMENDMENT B		(Column 1) CLAIMS REMAINING AFTER AMENDMENT		(Column 2) HIGHEST NUMBER PREVIOUSLY PAID FOR	(Column 3) PRESENT EXTRA	RATE ($)	ADDITIONAL FEE ($)	OR	RATE ($)	ADDITIONAL FEE ($)
	Total (37 CFR 1.16(i))	*	Minus	**	=	X$ 25 =		OR	X$50 =	
	Independent (37 CFR 1.16(h))	*	Minus	***	=	X100 =		OR	X200 =	
	Application Size Fee (37 CFR 1.16(s))									
	FIRST PRESENTATION OF MULTIPLE DEPENDENT CLAIM (37 CFR 1.16(j))					+180=		OR	+360=	
						TOTAL ADD'L FEE		OR	TOTAL ADD'L FEE	

* If the entry in column 1 is less than the entry in column 2, write "0" in column 3.
** If the "Highest Number Previously Paid For" IN THIS SPACE is less than 20, enter "20".
*** If the "Highest Number Previously Paid For" IN THIS SPACE is less than 3, enter "3".
The "Highest Number Previously Paid For" (Total or Independent) is the highest number found in the appropriate box in column 1.

This collection of information is required by 37 CFR 1.16. The information is required to obtain or retain a benefit by the public which is to file (and by the USPTO to process) an application. Confidentiality is governed by 35 U.S.C. 122 and 37 CFR 1.14. This collection is estimated to take 12 minutes to complete, including gathering, preparing, and submitting the completed application form to the USPTO. Time will vary depending upon the individual case. Any comments on the amount of time you require to complete this form and/or suggestions for reducing this burden, should be sent to the Chief Information Officer, U.S. Patent and Trademark Office, U.S. Department of Commerce, P.O. Box 1450, Alexandria, VA 22313-1450. DO NOT SEND FEES OR COMPLETED FORMS TO THIS ADDRESS. SEND TO: Commissioner for Patents, P.O. Box 1450, Alexandria, VA 22313-1450.

If you need assistance in completing the form, call 1-800-PTO-9199 and select option 2.

ZTE, Exhibit 1002-0222

PATENT APPLICATION SERIAL NO _____

U.S. DEPARTMENT OF COMMERCE
PATENT AND TRADEMARK OFFICE
FEE RECORD SHEET

09/30/2005 RMEBRAHT 00000100 11237341

01 FC:1011	300.00	OP
02 FC:1111	500.00	OP
03 FC:1311	200.00	OP

PTO-1556
(5/87)

U.S. Government Printing Office: 2002 — 466-247/69233