IN THE UNITED STATES PATENT AND TRADEMARK OFFICE

In re Application for:	Examiner: TBD
Burke et al.	Art Unit: TBD
Application No.: Not yet assigned	
Filed: July 22, 2014	
For: SYSTEM FOR REGULATING ACCESS TO AND DISTRIBUTING CONTENT IN A NETWORK	

Mail Stop Amendment
Commissioner for Patents
PO Box 1450
Alexandria, VA 22313-1450

PRELIMINARY AMENDMENT

Please enter this amendment before considering the captioned application.

Amendments to Specification begin on page **2** of this paper.

Amendments to Claims begin on page **3** of this paper.

Remarks/Arguments begin on page **11** of this paper.

AMENDMENTS TO THE SPECIFICATION

Please add this paragraph starting on page 2, before the paragraph entitled "Technical Field".

This application is a continuation of U.S. Patent Application 13/369,174, filed February 8, 2012 and entitled "SYSTEM FOR REGULATING ACCESS TO AND DISTRIBUTING CONTENT IN A NETWORK," now U.S. Patent 8,799,468, which is a continuation of U.S. Patent Application 10/989,023, filed November 16, 2004 and entitled "SYSTEM FOR REGULATING ACCESS TO AND DISTRIBUTING CONTENT IN A NETWORK," now U.S. Patent 8,122,128, which claims the benefit of U.S. Provisional Application No. 60/523,057 filed November 18, 2003, U.S. Provisional Application No. 60/538,370 filed January 22, 2004, and U.S. Provisional Application No. 60/563,064 filed April 16, 2004, the entire content and disclosures of the preceding enumerated provisional and non-provisional applications are hereby incorporated in their entirety.

DISH, Exh.1005, p.0002

AMENDMENTS TO THE CLAIMS

This listing of claims will replace all prior versions, and listings, of claims in the application:

LISTING OF THE CLAIMS:

1. (Original) A system for regulating access to a network, the system comprising:

a controller node coupled to the network, the controller node comprising:

a first processor for generating controller instructions, and

a first network interface for transmitting the controller instructions over the network; and

a plurality of gateway units, the gateway units comprising:

a user interface receiving user-entered network access requests;

a second network interface coupled to the network and receiving the controller instructions from the network; and

a second processor, the second processor selectively transmitting at least some of the network access requests over the service provider network in accordance with the controller instructions, and transferring received content data responsive to the transmitted network access requests over the service provider network via the second network interface.

2. (Original) The system of claim 1 wherein:

DISH, Exh.1005, p.0003

the gateway units further comprise a storage device for storing instructions;

the gateway units further comprise an identifier uniquely associating the gateway units with a user; and the storage device is operable to store user-specific information.

3. (Original) The system of claim 1, wherein:

the gateway units comprise a user interface receiving requests to transmit data; and

the gateway units comprise a second processor inspecting the data to selectively transfer the data in accordance with the controller instructions.

4. (Original) The system of claim 1, wherein:

the gateway units comprise a user interface receiving requests

to receive data; and

the gateway units comprise a second processor inspecting the data to selectively transfer the data in accordance with the controller instructions.

5. (Original) The system of claim 1, wherein the first processor generates the controller instructions automatically.

6. (Original) The system of claim 1, wherein the first processor generates the controller instructions in response to an operator-entered request.

7. (Original) The system of claim 1, wherein the controller nodes comprise a first processor generating the controller instructions by operator-controlled network crawling.

8. (Original) The system of claim 1, wherein the controller nodes comprise a first processor generating the controller instructions to deny user access to a first group of network servers.

DISH, Exh.1005, p.0004

9. (Original) The system of claim 8, wherein the gateway units comprise a second processor to generate a notification to a controller node if a network access request designates a network server of the first group of network servers.

10. (Original) The system of claim 8, wherein the gateway units comprise a second processor configured to:

detect a network access request designating a network server a first group of network servers; and

re-direct the access request to a second group of network servers in accordance with the controller instructions.

11. (Original) The system of claim 1, wherein:

the controller nodes comprise a first processor generating the controller instructions, the controller instructions including a file identifier; and

the system comprises a plurality of gateway units associated with a user file system, the gateway units comprising a second processor to detect a file in a user file system corresponding to the file identifier.

12. (Original) The system of claim 11, wherein the gateway units are operable between an active state and an inactive state.

13. (Original) The system of claim 12, wherein the second processors notify a controller node if the associated gateway unit enters an inactive state.

14. (Original) The system of claim 12, wherein the second processors delete the detected files from a user file system in accordance with the controller instructions.

15. (Original) The system of claim 14, wherein the second processors delete the detected files from a user file system during the inactive state.

DISH, Exh.1005, p.0005

16. (Original) The system of claim 11, wherein the gateway units notify a controller node if a file corresponding to the file identifier is detected.

17. (Original) The system of claim 1, wherein the gateway units comprise:

a housing; and

a detector for detecting an attempt to open the housing.

18. (Original) The system of claim 17, wherein the gateway unit notifies the controller node of a detected attempt to open the housing after a user-initiated event.

19. (Original) The system of claim 17, wherein the gateway units comprise a storage device and the second processor prevents access to the storage device when the detector detects an attempt to open the housing.

20. (Original) The system of claim 1, wherein the gateway units comprise a second processor that enters a user-controlled operational mode after receiving permission from the controller node.

21. (Original) The system of claim 1, wherein the controller node comprises a copyright registry for tracking copyright status of content data files distributed to gateway units in the system.

22. (Original) The system of claim 21, wherein the user interface receives registrations of the content data files for transmission to the copyright registry.

23. (Original) The system of claim 1, wherein the second processor causes the gateway unit to access a predetermined network site upon initiation of network browser software, in accordance with the controller instructions.

24. (Original) The system of claim 23, wherein the second processor selects the predetermined network site from a list of predetermined network sites received via

DISH, Exh.1005, p.0006

the controller instructions.

25. (Original) The system of claim 24, wherein the second processor selects the predetermined network site according to a weighting function such that at least a portion of the predetermined network sites are selected more often than others.

26. (Original) The system of claim 1, wherein the gateway units:

receive registration information from a user via the user interface; and

receive initial operating parameters via the second network interface.

27. (Original) The system of claim 1, wherein the gateway units:

receive registration information from a user via the user interface; and

receive software updates via the second network interface.

28. (Original) The system of claim 1, wherein:

the gateway units transmit advertising via the user interface to a user display, the advertising being customized in accordance with information received via at least one of the second network interface and the user interface.

29. (Original) The system of claim 1, wherein the gateway units:

transmit pay-per-view advertising via the user interface for selective display by a user; and

generate payment credits for the user upon display of the advertising by the user.

30. (Original) The system of claim 29, wherein the gateway units generate one of a plurality of viewing modes for viewing the pay-per-view advertising in response to a user selection.

DISH, Exh.1005, p.0007

31. (Original) The system of claim 1, wherein the gateway units receive software via the second network interface for execution on the second processor, the software enabling at least one of a fee-based network service, network video calling, and network gaming.

32. (Original) The system of claim 1, wherein the second processor detects a denial-of-service attack.

33. (Original) The system of claim 32, wherein the second processor detects a denial-of-service attack initiated by a virus.

34. (Original) The system of claim 1, wherein the gateway units selectively transmit to law enforcement terminals information describing at least one of incoming data and outgoing data to the gateway units.

35. (Original) The system of claim 1, wherein the gateway units:

detect a user attempt to at least one of transmit and receive voice traffic; and

selectively block the detected attempt in accordance with the controller instructions.

36. (Original) The system of claim 35 wherein the gateway units transmit, via the user interface, an advertisement offering voice transmission services.

37. (Original) The system of claim 1, wherein the gateway units:

detect a user attempt to at least one of transmit and receive at least one of audio and video traffic; and

selectively block the detected attempt in accordance with the controller instructions.

38. (Original) The system of claim 37, wherein the gateway units transmit, via

DISH, Exh.1005, p.0008

the user interface, an advertisement offering at least one of audio and video traffic services.

39. (Original) The system of claim 1, wherein the gateway units:

detect at least one of audio and video traffic flowing through the second network interface; and

selectively reduce the quality of service of the at least one of audio and video traffic in accordance with the controller instructions, wherein reduction of quality of service comprises at least one of:

reducing a duty cycle, inserting TCP/IP messages in the at least one of audio and video traffic, inserting Nak/Ack pairs in the at least one of audio and video traffic, and inserting X-On/X-Off pairs in the at least one of audio and video traffic.

40. (Original) The system of claim 1, further comprising a plurality of access nodes, wherein the controller node comprises a first processor for generating authorization instructions and transmitting the authorization instructions over the network to the access nodes, and the access nodes:

receive the authorization instructions from the controller node; and

selectively permit the gateway units to access the network in accordance with the authorization instructions.

41. (Original) The system of claim 1, wherein the gateway units comprise data storage units partitioned into a network portion and a user portion, and at least one of a first group of gateway units selectively shares data stored in the network partition with at least one of a second group of gateway units, via the second network interface, in accordance with the controller instructions.

DISH, Exh.1005, p.0009

42. (Original) The system of claim 1, wherein the second processor in at least a first one of the gateway units selectively forwards content data received from at least a second one of the gateway units to at least a third one of the gateway units in accordance with the controller instructions.

43. (Original) The system of claim 42 wherein the second processor in at least a first one of the gateway units:

receives portions of a content data file from a group of gateway units in accordance with the controller instructions; and

assembles a data file based on the received portions for transmission to the user via the user interface.

44. (Original) The system of claim 1, further comprising an intervention node, the intervention node comprising:

an operator interface for receiving operator-entered spoofing attack instructions; and

a third network interface for transmitting at least one substitute file pointer to addresses in the network in accordance with the spoofing attack instructions.

45-115 (Canceled)

DISH, Exh.1005, p.0010

REMARKS

Claims 1-44 remain pending. Claims 45-115 are canceled herein. No new claims are added. It is respectfully submitted that all claims are fully supported by the original disclosure as originally filed and no new matter has been added.

If the Examiner has any questions concerning the present paper, the Examiner is kindly requested to contact the undersigned at the direct number listed below. For any shortage or excess of fees in connection with filing this paper, the Commissioner is authorized to charge or credit Deposit Account No. 500393.

Respectfully submitted,
Schwabe, Williamson & Wyatt, P.C.

Dated: July 22, 2014

/Al AuYeung/
Al AuYeung
Direct: (206) 381-8819
Fax 206-292-0460

DISH, Exh.1005, p.0011

Electronic Acknowledgement Receipt

EFS ID:	19653005
Application Number:	14338240
International Application Number:	
Confirmation Number:	7564
Title of Invention:	SYSTEM FOR REGULATING ACCESS TO AND DISTRIBUTING CONTENT IN A NETWORK
First Named Inventor/Applicant Name:	Robert M. Burke, II
Customer Number:	60172
Filer:	Aloysius T.C. Auyeung/Melee Christopherson
Filer Authorized By:	Aloysius T.C. Auyeung
Attorney Docket Number:	123205-198706
Receipt Date:	22-JUL-2014
Filing Date:	
Time Stamp:	19:29:30
Application Type:	Utility under 35 USC 111(a)

Payment information:

Submitted with Payment	no

File Listing:

Document Number	Document Description	File Name	File Size(Bytes)/ Message Digest	Multi Part /.zip	Pages (if appl.)
1	Application Data Sheet	BC_P001C2_ADS.pdf	1024264 106721c0daee7250f4218c0828c61eba2a4c5ce4	no	5

Warnings:	
Information:	

2		BC_P001C2_Application.pdf	2388032 05c6f9a971ab3252f5abfd7fcca31e0c195896bb	yes	69

Multipart Description/PDF files in .zip description		
Document Description	**Start**	**End**
Specification	1	39
Claims	40	68
Abstract	69	69

Warnings:					
Information:					
3	Drawings-only black and white line drawings	BC_P001C2_Figures.pdf	798110 693c537f10ed4b304380575c31d1f420dd599429	no	7
Warnings:					
Information:					
4	Oath or Declaration filed	BC_P001C2_Declaration.pdf	106708 b0d63e3ec4a233289012f132d00de7da1f1097e3	no	2
Warnings:					
Information:					
5	Preliminary Amendment	BC_P001C2_Preliminary_Amendment.pdf	96999 d1c6b740f9c32f53df0f875cbeafcfc3ac7f3944	no	11
Warnings:					
Information:					
		Total Files Size (in bytes):	4414113		

This Acknowledgement Receipt evidences receipt on the noted date by the USPTO of the indicated documents, characterized by the applicant, and including page counts, where applicable. It serves as evidence of receipt similar to a Post Card, as described in MPEP 503.

New Applications Under 35 U.S.C. 111

If a new application is being filed and the application includes the necessary components for a filing date (see 37 CFR 1.53(b)-(d) and MPEP 506), a Filing Receipt (37 CFR 1.54) will be issued in due course and the date shown on this Acknowledgement Receipt will establish the filing date of the application.

National Stage of an International Application under 35 U.S.C. 371

If a timely submission to enter the national stage of an international application is compliant with the conditions of 35 U.S.C. 371 and other applicable requirements a Form PCT/DO/EO/903 indicating acceptance of the application as a national stage submission under 35 U.S.C. 371 will be issued in addition to the Filing Receipt, in due course.

New International Application Filed with the USPTO as a Receiving Office

If a new international application is being filed and the international application includes the necessary components for an international filing date (see PCT Article 11 and MPEP 1810), a Notification of the International Application Number and of the International Filing Date (Form PCT/RO/105) will be issued in due course, subject to prescriptions concerning national security, and the date shown on this Acknowledgement Receipt will establish the international filing date of the application.

PTO/SB/14 (11-08)
Approved for use through 01/31/2014. OMB 0651-0032
U.S. Patent and Trademark Office; U.S. DEPARTMENT OF COMMERCE
Under the Paperwork Reduction Act of 1995, no persons are required to respond to a collection of information unless it contains a valid OMB control number.

Application Data Sheet 37 CFR 1.76	Attorney Docket Number	123205-198706
	Application Number	
Title of Invention	SYSTEM FOR REGULATING ACCESS TO AND DISTRIBUTING CONTENT IN A NETWORK	

The application data sheet is part of the provisional or nonprovisional application for which it is being submitted. The following form contains the bibliographic data arranged in a format specified by the United States Patent and Trademark Office as outlined in 37 CFR 1.76.
This document may be completed electronically and submitted to the Office in electronic format using the Electronic Filing System (EFS) or the document may be printed and included in a paper filed application.

Secrecy Order 37 CFR 5.2

☐ Portions or all of the application associated with this Application Data Sheet may fall under a Secrecy Order pursuant to 37 CFR 5.2 (Paper filers only. Applications that fall under Secrecy Order may not be filed electronically.)

Applicant Information:

Applicant 1 Remove

Applicant Authority ◉ Inventor ○ Legal Representative under 35 U.S.C. 117 ○ Party of Interest under 35 U.S.C. 118

Prefix	Given Name	Middle Name	Family Name	Suffix
	Robert	M.	Burke II	

Residence Information (Select One) ◉ US Residency ○ Non US Residency ○ Active US Military Service

City	Los Gatos	State/Province	CA	Country of Residence[i]	US

Citizenship under 37 CFR 1.41(b)[i]: US

Mailing Address of Applicant:

Address 1	420 Alberto Way, Unit #49		
Address 2			
City	Los Gatos	State/Province	CA
Postal Code	95032	Country[i]	US

Applicant 2 Remove

Applicant Authority ◉ Inventor ○ Legal Representative under 35 U.S.C. 117 ○ Party of Interest under 35 U.S.C. 118

Prefix	Given Name	Middle Name	Family Name	Suffix
	David	Z.	Carman	

Residence Information (Select One) ◉ US Residency ○ Non US Residency ○ Active US Military Service

City	Tulsa	State/Province	OK	Country of Residence[i]	US

Citizenship under 37 CFR 1.41(b)[i]: US

Mailing Address of Applicant:

Address 1	1131 East 20th Street		
Address 2			
City	Tulsa	State/Province	OK
Postal Code	74120	Country[i]	US

All Inventors Must Be Listed - Additional Inventor Information blocks may be generated within this form by selecting the **Add** button. Add

Correspondence Information:

Enter either Customer Number or complete the Correspondence Information section below.
For further information see 37 CFR 1.33(a).

☐ **An Address is being provided for the correspondence Information of this application.**

PTO/SB/14 (11-08)
Approved for use through 01/31/2014. OMB 0651-0032
U.S. Patent and Trademark Office; U.S. DEPARTMENT OF COMMERCE
Under the Paperwork Reduction Act of 1995, no persons are required to respond to a collection of information unless it contains a valid OMB control number.

Application Data Sheet 37 CFR 1.76	Attorney Docket Number	123205-198706
	Application Number	
Title of Invention	SYSTEM FOR REGULATING ACCESS TO AND DISTRIBUTING CONTENT IN A NETWORK	

Customer Number	60172		
Email Address		Add Email	Remove Email

Application Information:

Title of the Invention	SYSTEM FOR REGULATING ACCESS TO AND DISTRIBUTING CONTENT IN A NETWORK		
Attorney Docket Number	123205-198706	Small Entity Status Claimed	☒
Application Type	Nonprovisional		
Subject Matter	Utility		
Suggested Class (if any)		Sub Class (if any)	
Suggested Technology Center (if any)			
Total Number of Drawing Sheets (if any)	7	Suggested Figure for Publication (if any)	

Publication Information:

☐ Request Early Publication (Fee required at time of Request 37 CFR 1.219)

☐ **Request Not to Publish.** I hereby request that the attached application not be published under 35 U.S. C. 122(b) and certify that the invention disclosed in the attached application **has not and will not** be the subject of an application filed in another country, or under a multilateral international agreement, that requires publication at eighteen months after filing.

Representative Information:

Representative information should be provided for all practitioners having a power of attorney in the application. Providing this information in the Application Data Sheet does not constitute a power of attorney in the application (see 37 CFR 1.32).
Enter either Customer Number or complete the Representative Name section below. If both sections are completed the Customer Number will be used for the Representative Information during processing.

Please Select One:	◉ Customer Number	○ US Patent Practitioner	○ Limited Recognition (37 CFR 11.9)
Customer Number	60172		

Domestic Benefit/National Stage Information:

This section allows for the applicant to either claim benefit under 35 U.S.C. 119(e), 120, 121, or 365(c) or indicate National Stage entry from a PCT application. Providing this information in the application data sheet constitutes the specific reference required by 35 U.S.C. 119(e) or 120, and 37 CFR 1.78(a)(2) or CFR 1.78(a)(4), and need not otherwise be made part of the specification.

Prior Application Status	Pending		Remove
Application Number	Continuity Type	Prior Application Number	Filing Date (YYYY-MM-DD)
	Continuation of	13369174	2012-02-08
Prior Application Status	Pending		Remove
Application Number	Continuity Type	Prior Application Number	Filing Date (YYYY-MM-DD)
13369174	Continuation of	10989023	2004-11-16

BrSh, Exh.1005, p.0016

PTO/SB/14 (11-08)
Approved for use through 01/31/2014. OMB 0651-0032
U.S. Patent and Trademark Office; U.S. DEPARTMENT OF COMMERCE
Under the Paperwork Reduction Act of 1995, no persons are required to respond to a collection of information unless it contains a valid OMB control number.

Application Data Sheet 37 CFR 1.76	Attorney Docket Number	123205-198706
	Application Number	
Title of Invention	SYSTEM FOR REGULATING ACCESS TO AND DISTRIBUTING CONTENT IN A NETWORK	

Prior Application Status	Expired		Remove
Application Number	Continuity Type	Prior Application Number	Filing Date (YYYY-MM-DD)
10989023	non provisional of	60563064	2004-04-16
Prior Application Status	Expired		Remove
Application Number	Continuity Type	Prior Application Number	Filing Date (YYYY-MM-DD)
10989023	non provisional of	60538370	2004-01-22
Prior Application Status	Expired		Remove
Application Number	Continuity Type	Prior Application Number	Filing Date (YYYY-MM-DD)
10989023	non provisional of	60523057	2003-11-18

Additional Domestic Benefit/National Stage Data may be generated within this form by selecting the **Add** button. Add

Foreign Priority Information:

This section allows for the applicant to claim benefit of foreign priority and to identify any prior foreign application for which priority is not claimed. Providing this information in the application data sheet constitutes the claim for priority as required by 35 U.S.C. 119(b) and 37 CFR 1.55(a).

Remove

Application Number	Country [i]	Parent Filing Date (YYYY-MM-DD)	Priority Claimed
			○ Yes ◉ No

Additional Foreign Priority Data may be generated within this form by selecting the **Add** button. Add

Assignee Information:

Providing this information in the application data sheet does not substitute for compliance with any requirement of part 3 of Title 37 of the CFR to have an assignment recorded in the Office.

Assignee 1 Remove

If the Assignee is an Organization check here. ☐

Prefix	**Given Name**	Middle Name	**Family Name**	Suffix

Mailing Address Information:

Address 1			
Address 2			
City		**State/Province**	
Country [i]		Postal Code	
Phone Number		Fax Number	
Email Address			

Additional Assignee Data may be generated within this form by selecting the **Add** button. Add

Signature:

A signature of the applicant or representative is required in accordance with 37 CFR 1.33 and 10.18. Please see 37 CFR 1.4(d) for the form of the signature.

DISH, Exh.1005, p.0017

PTO/SB/14 (11-08)
Approved for use through 01/31/2014. OMB 0651-0032
U.S. Patent and Trademark Office; U.S. DEPARTMENT OF COMMERCE
Under the Paperwork Reduction Act of 1995, no persons are required to respond to a collection of information unless it contains a valid OMB control number.

Application Data Sheet 37 CFR 1.76	Attorney Docket Number	123205-198706
	Application Number	
Title of Invention	SYSTEM FOR REGULATING ACCESS TO AND DISTRIBUTING CONTENT IN A NETWORK	

Signature	/Al AuYeung/			Date (YYYY-MM-DD)	2014-07-22
First Name	Al	Last Name	AuYeung	Registration Number	35432

This collection of information is required by 37 CFR 1.76. The information is required to obtain or retain a benefit by the public which is to file (and by the USPTO to process) an application. Confidentiality is governed by 35 U.S.C. 122 and 37 CFR 1.14. This collection is estimated to take 23 minutes to complete, including gathering, preparing, and submitting the completed application data sheet form to the USPTO. Time will vary depending upon the individual case. Any comments on the amount of time you require to complete this form and/or suggestions for reducing this burden, should be sent to the Chief Information Officer, U.S. Patent and Trademark Office, U.S. Department of Commerce, P.O. Box 1450, Alexandria, VA 22313-1450. DO NOT SEND FEES OR COMPLETED FORMS TO THIS ADDRESS. **SEND TO: Commissioner for Patents, P.O. Box 1450, Alexandria, VA 22313-1450.**

Privacy Act Statement

The Privacy Act of 1974 (P.L. 93-579) requires that you be given certain information in connection with your submission of the attached form related to a patent application or patent. Accordingly, pursuant to the requirements of the Act, please be advised that: (1) the general authority for the collection of this information is 35 U.S.C. 2(b)(2); (2) furnishing of the information solicited is voluntary; and (3) the principal purpose for which the information is used by the U.S. Patent and Trademark Office is to process and/or examine your submission related to a patent application or patent. If you do not furnish the requested information, the U.S. Patent and Trademark Office may not be able to process and/or examine your submission, which may result in termination of proceedings or abandonment of the application or expiration of the patent.

The information provided by you in this form will be subject to the following routine uses:

1. The information on this form will be treated confidentially to the extent allowed under the Freedom of Information Act (5 U.S.C. 552) and the Privacy Act (5 U.S.C. 552a). Records from this system of records may be disclosed to the Department of Justice to determine whether the Freedom of Information Act requires disclosure of these records.

2. A record from this system of records may be disclosed, as a routine use, in the course of presenting evidence to a court, magistrate, or administrative tribunal, including disclosures to opposing counsel in the course of settlement negotiations.

3. A record in this system of records may be disclosed, as a routine use, to a Member of Congress submitting a request involving an individual, to whom the record pertains, when the individual has requested assistance from the Member with respect to the subject matter of the record.

4. A record in this system of records may be disclosed, as a routine use, to a contractor of the Agency having need for the information in order to perform a contract. Recipients of information shall be required to comply with the requirements of the Privacy Act of 1974, as amended, pursuant to 5 U.S.C. 552a(m).

5. A record related to an International Application filed under the Patent Cooperation Treaty in this system of records may be disclosed, as a routine use, to the International Bureau of the World Intellectual Property Organization, pursuant to the Patent Cooperation Treaty.

6. A record in this system of records may be disclosed, as a routine use, to another federal agency for purposes of National Security review (35 U.S.C. 181) and for review pursuant to the Atomic Energy Act (42 U.S.C. 218(c)).

7. A record from this system of records may be disclosed, as a routine use, to the Administrator, General Services, or his/her designee, during an inspection of records conducted by GSA as part of that agency's responsibility to recommend improvements in records management practices and programs, under authority of 44 U.S.C. 2904 and 2906. Such disclosure shall be made in accordance with the GSA regulations governing inspection of records for this purpose, and any other relevant (i.e., GSA or Commerce) directive. Such disclosure shall not be used to make determinations about individuals.

8. A record from this system of records may be disclosed, as a routine use, to the public after either publication of the application pursuant to 35 U.S.C. 122(b) or issuance of a patent pursuant to 35 U.S.C. 151. Further, a record may be disclosed, subject to the limitations of 37 CFR 1.14, as a routine use, to the public if the record was filed in an application which became abandoned or in which the proceedings were terminated and which application is referenced by either a published application, an application open to public inspections or an issued patent.

9. A record from this system of records may be disclosed, as a routine use, to a Federal, State, or local law enforcement agency, if the USPTO becomes aware of a violation or potential violation of law or regulation.

UNITED STATES PATENT APPLICATION

FOR

SYSTEM FOR REGULATING ACCESS TO AND DISTRIBUTING CONTENT IN A NETWORK

BY

ROBERT M. BURKE, II

AND

DAVID Z. CARMAN

DESCRIPTION

Technical Field

[001] This invention is in general related to regulation of access to a network and, more particularly, to distributing content efficiently while protecting the digital rights associated with the content.

Background

[002] The network commonly known as the Internet, or any similar private or managed network, provides a convenient medium for the delivery of electronic data or content such as music, video, games, broadband data, real-time audio and voice applications, and software to subscribers. To accomplish these purposes, the Internet is composed of several components including, for example, content providers for generating content; service providers for delivering content; subscriber terminals for receiving, displaying and playing content; and various additional network elements between service providers and subscribers for aiding in the distribution of the content. Service providers include, for example, telephone line carriers, enterprise data centers, and cable television providers. Subscriber terminals are located at subscriber premises and include, for example, personal computers, televisions configured with modems, a combination of both, or any other combination of consumer electronics capable of presenting electronic content to a subscriber.

[003] Interest in providing delivery of content via the Internet has remained high throughout the growth of the Internet. Several problems have yet to be overcome, however, before the Internet is fully effective at delivering content efficiently and rapidly, while also protecting the rights of the owners of content, that is, the owners of

DISH, Exh.1005, p.0021

intellectual property. Techniques for protecting this intellectual property are often referred to as Digital Rights Management (DRM). Recent music industry lawsuits over the distribution of pirated music are evidence of the difficulties not yet solved by current DRM techniques.

[004] Service providers and content providers need the assurance that the intellectual property (music, video, games, software, etc.) will be secure from illegal downloading and transmission over the Internet, a major source of lost revenues and the basis for hundreds of lawsuits. Service providers want this feature to halt the legal onslaught launched by music companies and to encourage the motion picture industry to license their content for distribution over the otherwise unsecured Internet. The motion picture industry is understandably reluctant, having seen the negative impact that piracy has already had on the Music Recording Industry. Content providers thus demand this feature to stop the illegal downloading and transmission of intellectual property over the Internet which has cost the music and movie industries billions of dollars annually. Techniques that reduce the strain on a content provider's resources and reduce the high volumes of network data traffic are also desirable in order to improve the speed and efficiency of accessing content in a network.

[005] Another difficult problem that remains to be solved is providing a means for law enforcement agencies to execute warrants to wire-tap Internet communications such as email and real-time audio and video communications. A solution to this problem is especially desirable considering the importance of thwarting terrorist attacks. The Patriot Act and other recently passed legislation indicate the desirability and importance of providing such capabilities to law enforcement bodies.

[006] It is therefore desirable to provide new access regulation and data traffic control techniques that can be made available to telephone line carriers, ISPs, enterprises, cable television companies, for their Internet access networks. In addition, it is desirable to provide a means for law enforcement bodies to combat the prevalent use of Internet communications in planning illegal operations. In particular, it is desirable to meet these needs using the service provider's existing distribution network.

SUMMARY

[007] Consistent with the invention, there is provided a system for regulating access to a network. The system comprises a controller node coupled to the network, the controller node comprising a first processor for generating controller instructions and a first network interface for transmitting the controller instructions over the network. The system also comprises a plurality of gateway units, the gateway units comprising a user interface receiving user-entered network access requests, a second network interface coupled to the network and receiving the controller instructions from the network and a second processor, the second processor selectively transmitting at least some of the network access requests over the network in accordance with the controller instructions, and transferring content data responsive to the transmitted network access requests over the network via the second network interface.

[008] Consistent with another aspect of the present invention, there is also provided a system for regulating access to a network that is accessed by a plurality of users. The system comprises a controller node coupled to the network, the controller node comprising a first processor for generating controller instructions and a first network interface for transmitting the controller instructions over the network. The

DISH, Exh.1005, p.0023

system also comprises a plurality of network units associated with a first group of users, the network units comprising a second network interface coupled to the network and receiving the controller instructions from the network and a second processor, the second processor inhibiting access for a second group of users to content in the network in accordance with the controller instructions.

[009] Consistent with yet another aspect of the present invention, there is also provided a system for distributing content over a network. The system comprises a controller node coupled to the network, the controller node comprising a first processor for generating controller instructions and a first network interface for transmitting the controller instructions over the network. The system also comprises a plurality of network units, the network units comprising a second network interface coupled to the network, the second network interface in at least a first one of the network units receiving the controller instructions from the network and receiving a portion of a content data file from at least a second one of the network units and a second processor, the second processor in the at least first one of the network units selectively forwarding the portion of the content data file received from the at least second one of the network units to at least a third one of the network units in accordance with the controller instructions.

[010] It is to be understood that both the foregoing general description and the following detailed description are exemplary and explanatory only and are not restrictive of the invention, as claimed.

DISH, Exh.1005, p.0024

[011] The accompanying drawings, which are incorporated in and constitute a part of this specification, illustrate one (several) embodiment(s) of the invention and together with the description, serve to explain the principles of the invention.

BRIEF DESCRIPTION OF THE DRAWINGS

[012] **Figure 1** depicts the overall environment in which the present invention is implemented.

[013] **Figure 2** depicts a communication gateway consistent with the present invention.

[014] **Figure 3** depicts an internet control point consistent with the present invention.

[015] **Figure 4** depicts a network element consistent with the present invention.

[016] **Figure 5** is a flow chart of a method for selectively transmitting network access requests consistent with the present invention.

[017] **Figure 6** is a flow chart of a method for inhibiting access to content servers on a network consistent with the present invention.

[018] **Figure 7** is a flow chart of a method for distributing content in a network consistent with the present invention.

DETAILED DESCRIPTION

[019] **System Architecture**

[020] Consistent with principles of the present invention, there is provided a system including a Service Preference Architecture (SPA). The SPA is a collection of hardware components and software routines executed by the components. Components installed at a subscriber's site may be referred to as gateway units, or

more specifically, Communication Gateways (CGs). The subscribers may include residential and business subscribers. The CGs may include a data storage device such as a hard drive, and are operable between active and inactive states. CGs operate in conjunction with SPA-based Internet Service Providers (ISPs) under the control of "controller nodes," hereinafter referred to as Internet Control Points (ICPs). The ICPs are installed in an ISP's network. ICPs may be network-based routers or computers that control the operation of CGs.

[021] The software routines located in CGs and ICPs provide a suite of features for the system. ISPs, such as telecommunication carriers, electronic data centers, and cable TV companies, may be equipped to deliver the suite of features by using a network service based system.

[022] In general, the SPA uses ICPs to control subscriber access to web sites and to deliver data to subscribers. The ICPs control the processing of data sent between subscribers (e.g., client PCs or LAN servers) and the ISPs or content servers with which they are exchanging information, using the CGs. The ICPs cooperate with hardware and software of the CGs located at a subscriber's premises to provide the specific features of the system.

[023] The CGs cannot be tampered with by subscribers. This is accomplished by two aspects of the CGs. First, CGs are specifically designed to permit no subscriber-initiated programming and no access to the CG hardware or software. Instead, the CGs are provided only with compiled code loaded from flash memory, a hard drive, or EEPROM. Updates to this code are obtained from ICPs and encrypted passwords are stored in hidden, undocumented locations to allow authentication of ICP

DISH, Exh.1005, p.0026

presence prior to CG control program update. The passwords are changed frequently during an "idle process control" phase and tracked by an ICP.

[024] The second anti-tampering aspect is the provision of a housing for the CGs and a detector consisting of a one or more "deadman" switches that are tripped upon opening the housing or removing a CG's hard drive. The circuit may be either passive or active.

[025] If the detector is passive, it signals an internal controller upon re-start that it has been tripped and causes an event notification sent to an ICP upon next power-up. Upon receipt of the event notification, either the ICP initiates diagnostics and disables the CG if a software tamper has occurred, or the CG disables both its control software and its internal hard drive to prevent the hard drive from operating, until it is returned to the ISP for repair. Subscriber agreements may be used to supply a contract provision specifying that tampering voids the warranty and that the subscriber deeds a portion of the CG to the ISP and agrees to return tampered products to the ISP.

[026] If the detector is active, the "deadman switch" is kept powered by, for example, battery or capacitor. The trip is used to immediately disable the controller software in the processor and the internal hard drive of the CG. Both may be reset only by the ICP, either automatically or by human intervention. These measures prevent subscribers from writing, compiling, executing. modifying, or otherwise tampering with the operating software of the CG. Second, the active mode prevents users from getting access to the content on the hard drive.

[027] In addition to these tamper-proof provisions, all ICP-CG communications take place within the ISP side of the network and ICP-CG communications are secured

with encryption and hashing. Furthermore, all CGs must be registered with the ISP. An ICP will not enable any service to an un-registered CG and an un-registered CG will not operate in an experimental environment at all. At the onset of power-up or transition from an inactive to an active state, the CG signals the ICP and the ICP returns an "OK" message prior to proceeding further. This transaction requires an encrypted password exchange to authorize the CG to enter an "active" state where it can play back, download or be used for anything delivering services to users. These measures ensure secure control of the data flow between both the ICP and the CG. This secure flow of data then enables ISPs to effectively and efficiently control the services provided to subscribers.

[028] Reference will now be made in detail to the present embodiments (exemplary embodiments) of the invention, examples of which are illustrated in the accompanying drawings. Wherever possible, the same reference numbers will be used throughout the drawings to refer to the same or like parts.

[029] **Figure 1** illustrates an environment in which the invention may operate. A Service Preference Architecture (SPA) may include at least one Internet Control Point ("ICP") **50** connected to a network **52**. Network **52** may be, for example, the Internet, a metro area network, or a local area network, and may include a plurality of SPA-controlled network elements **54** and non-SPA-controlled network elements **55**. Network elements **54, 55** may include, for example, network switches and routers. SPA-controlled network elements **54** aid in regulating access and distributing content through network **52**.

DISH, Exh.1005, p.0028

[030] Also connected to network **52** are content servers including at least one SPA-controlled content server **56** and a plurality of communication gateways ("CGs") **58**, including CGs $\mathbf{58_1}$, $\mathbf{58_2}$, . . $\mathbf{58_n}$. A subscriber terminal $\mathbf{60_1}$, $\mathbf{60_2}$, . . $\mathbf{60_n}$ may be connected to each respective CG **58**, or in an alternative embodiment not shown, may be combined with each respective CG **58** to form "converged" CGs **58**.

[031] An SPA-controlled content server **56** may be, for example, a computing terminal used to deliver content services. A content service may include, for example, delivery of any media file (such as movies, music, pictures, and graphics), software file (such as a complete application, operating parameters, data files, or partial application/updates) or a real time application (such as interactive data processing, voice communications or visual communications to an end user). In an alternative embodiment, the functions of SPA-controlled content server **56** and ICP 50 may be combined in a single component.

[032] ICP **50** is typically located remotely from subscriber terminals **60** and regulates both subscriber access to network **52** and distribution of content in network **52**. The content may originate from SPA-controlled content server **56**, for example, or from other content servers **57** in network **52**. ICP **50** works in conjunction with CGs **58** and SPA-controlled network elements **54** by generating instructions which are transmitted over network **52** to CGs **58** and SPA-controlled network elements **54**, where the instructions are executed.

[033] ICP **50** may constitute the source of internet service control and conditional denial of subscriber access to ISP-selected URLs or IP addresses. ICP **50** may control CGs **58** to determine what web site data is allowed to pass through to

DISH, Exh.1005, p.0029

subscribers using, for example, web browser programs executing in subscriber terminals **60**. ICP **50** may also control packet inspection processing in CGs **58** to determine which data can be allowed to flow through CGs **58** to and from subscriber terminals **60**, specifically when e-mail or file transfers are initiated. ICP **50** also controls what activities are engaged in by idle CGs **58** when corresponding subscriber terminals **60** are inactive. Idle CGs **58** may receive software downloads from ICP **50**, collect data, and initiate communications activities that are disruptive to certain non-SPA content servers **57** that offer unauthorized copyrighted materials for illegal download by subscribers. Multiple ICPs **50** may be deployed geographically in an ISP's network to support the CG management capacity of ICP **50** and the number of subscribers in its service area.

[034] An ISP may provide an ISP portal **62** to facilitate subscriber access to network **52**. ISP portal **62** may be, for example, an enterprise data center. Access node **66** is associated with the ISP providing ISP portal **62**. ICP **50** interacts with ISP portal **62**, ISP associated access node **66**, and SPA-controlled content server **56** to control subscribers' ability to access services that are offered by ISP portal **62**. ICP **50** also controls CGs **58** to deliver various services, including, for example, advertisements, the home page for ISP Portal **62** or SPA-controlled content server **56** web servers, or software downloads to subscriber terminals **60** for their use of ISP **62** or SPA-controlled content server **56** services.

[035] ICP **50** also interacts with SPA-controlled network elements **54** used by ISP portal **62** to deliver services. ICP **50** controls subscribers' ability to access services that are offered by the ISP portal **62** and controls the operation of the services

DISH, Exh.1005, p.0030

themselves by controlling the flow of data through SPA-controlled network elements **54** used by ISP portal **62**.

[036] ICP **50** may be programmed either by human input or by operator-controlled web crawler software. Updates to a database in ICP **50** may be provided by an active intervention system **64** whereby changes to ICP **50** database entries are discovered and implemented. The updates to ICP **50** database may be made in a manner analogous to the regular updating of virus definitions for computer virus and worm protection.

[037] The web crawlers, human intervention, and ICP **50** and CG **58** database updates may be controlled by active intervention system **64**. Active intervention system **64** may include, for example, a set of centrally maintained computer systems. Active intervention system **64** may control the operation of various geographically deployed ICPs **50**.

[038] The process begins with active intervention system **64**. Active intervention system **64** is used by human operators to discover new URLs or IP addresses to "pirate" sites to conditionally deny access to these URLs or IP addresses by CGs **58**, discover changes needed to implement Digital Rights Management (DRM) techniques, discover and record new packet characteristics, install wiretaps as ordered, process new copyright registry entries, change encryption techniques, and perform other management services. ICPs **50** then deliver active and real time executed network management, distribute new database entries and software changes to CGs **58** and track operation of the SPA-controlled network elements **54**. Although one ICP **50** is illustrated there may be more. Thus, multiple ICPs **50** may be networked together to

DISH, Exh.1005, p.0031

enable them to manage large numbers of SPA-controlled network elements **54** and provide redundant, highly reliable operation. Furthermore, ICPs **50** may all use identical databases to enable uninterrupted network management.

[039] As illustrated in **Figure 2**, a CG **58** may include a user interface **100** that receives subscriber requests, entered by subscribers at an associated subscriber terminal **60**, to access network **52**. CG **58** may also include a network interface **102** to exchange data with network **52** and to receive instructions from ICP **50**; a memory device **104** including a database for storing ICP-generated instructions, initial operating parameters, and other records; a processor **106** to implement the instructions; a content storage device **108** having a user partition and a network partition for storing content; and a housing disassembly detector **110** to prevent tampering, as described above. Memory device **104** may be, for example, a bank of one or more semiconductor memories, a bank of one or more hard disk drives, a combination of semiconductor memories and hard disk drives or any other device that holds data. Processor **106** may be, for example, a general purpose processor (such as a Pentium 4 processor, an integrated circuit, or collection of integrated circuits) that can execute program instructions and is designed to allow control of CG **58** to be implemented in purely software and may also be used for non-CG related general purpose computing applications, or processor **106** may be a special purpose processor (integrated circuit or collection of integrated circuits) that can execute program instructions and is designed with only the power, bus, memory, logic and hardware accelerators needed to control CG **58**. Content storage **108** may be, for example, a bank of one or more semiconductor memories, a bank of one or more hard disk drives, a combination of

semiconductor memories and hard disk drives or any other device that holds data. CGs may be provided in various forms, such as, for example, a gateway module that combines TV, video, internet and voice access, a dial-up remote access server, an ADSL modem/router, a satellite TV gateway, a cable TV modem, a converged set top-plus-internet gateway, a wireless modem, or other fixed or mobile computing, playback, recording, display or communications device including radio, TV, stereo, wireless phone, phone, DVD, VCR, WLAN access point, wireless broadband or narrowband modem, or similar device.

[040] As illustrated in **Figure 3**, an ICP **50** may include one or more network interfaces **200**, one or more processors **202**, a memory device **204** including a database for storing records, and a non-internet communications link for traffic between processors and shared storage and memory. The records preferably include instructions that may be updated by active intervention system **64** and distributed to CGs **58** and SPA-controlled network elements **54** for execution.

[041] As illustrated in **Figure 4**, SPA-controlled network elements **54** may include one or more network interfaces **300**, one or more processors **302**, a memory device **304** including a database, and one or more switch modules **306** for providing routing and switching services. Components **300, 302,** and **304** may operate in a similar fashion to the corresponding components of the CGs. SPA-controlled network element **54** may be provided in various forms, such as, for example, a computer used to deliver data services or content services, a core router or ATM switch, a subscriber management system used to control access to the network, authenticate subscribers or devices before allowing access into the network, a DSLAM, cable modem system,

wireless modem system, or any other multiplexing or channel service delivery system, or a satellite that incorporates any of these elements.

[042] **Service Initialization**

[043] CGs **58** may be required to register with ICP **50** when they are powered up for the first time. CGs **58** will remain inactive until they receive a registration confirmation from SPA-controlled content server **56** or ICP **50**. The registration process may include collection of information by ICP **50** for a warranty registration from the subscriber such as, for example, CG's **58** hardware address and other identifying data. ICP **50** will then send CG **58** the latest operating software, if necessary, and its initial operating parameters to load in memory **104**. Initial operating parameters may include, for example, the address of the CG's **58** ICP **50** and other variables as described below. Subsequent re-registrations may be initiated by CG **58** under subscriber control for address or ISP changes.

[044] **Active and Inactive CG Processing Control**

[045] Upon power down or inactivity timeout of CG **58**, CG **58** may register itself as "idle" by sending an event notification to ICP **50**. The duration of an inactivity timeout may be preset and may be changed by input to ICP **50** for distribution to all CGs **58** under the control of ICP **50**.

[046] Upon subsequent re-activation, which may be initiated by either power up or signals from subscriber terminal **60**, CG **58** identifies itself as "active" by sending an event notification to ICP **50**, which responds with an acknowledgement. Failure of a CG **58** to receive an acknowledgement results in a series of re-tries until finally a timeout or maximum number of re-tries occurs. When this occurs, a diagnostic program may be

DISH, Exh.1005, p.0034

executed in CG **58** to advise the subscriber what to do next, based on the deduced source of the failure. Active CGs **58** may process and control delivery of content and services from SPA-controlled content server **56** or ISP portal **62**. Inactive CGs **58** may process and control either CG maintenance or may carry out activity delegated to inactive CGs by design.

[047] **Conditional Denial**

[048] **Figure 5** shows a method, consistent with the invention for regulating user access to a network. In step **400**, a gateway unit associated with a user receives controller instructions from the network. Next, at step **402**, the gateway unit receives a network access request from a user, via a subscriber terminal. At step **404**, the gateway unit selectively transmits the network access requests over the network in accordance with the controller instructions. Finally, at step **406**, the gateway unit receives content data responsive to the transmitted network access request from the network. Consistent with the present invention, this section, and others that follow, describe in more detail the implementation of this method.

[049] CGs **58**, under ICP **50** control, may provide a network-based Digital Rights Management (DRM) service. The DRM service denies subscribers the capability to send or to receive data from or to "pirate" URLs or IP addresses that are known to contain unlicensed copyrighted material. In implementing this denial, CG **58** deletes the "pirate" URL or IP address and substitutes the URL or IP address of a site that offers licensed copyrighted materials for legal, authorized sale. The list of "pirate" URLs or IP addresses that are known to contain unlicensed copyrighted material may be regularly updated, similar to the manner in which virus definitions are regularly updated.

DISH, Exh.1005, p.0035

[050] Furthermore, when other non-web browser programs executing in subscriber terminals **60** attempt to access a blocked site, the request to the URL or IP address of the blocked site may be redirected to a legal content provider's URL or IP address or ignored.

[051] Upon registration of a CG **58** as "active," ICP **50** may update the list in CG **58** of DRM URL or IP address substitutions.

[052] **Packet Inspection**

[053] CGs **58** and SPA-controlled network elements **54** may perform packet inspection to determine the file type of all files being transferred through CG **58** or SPA-controlled network elements **54**, based on file properties, including, for example, file extension, file format, header or trailer contents and URL/IP addresses that are known sources of unauthorized copyrighted material. ICP **50** programs CGs **58** and SPA-controlled network elements **54** with certain data patterns. These data patterns may be any length and may contain exact matches or regular expressions. When certain data patterns are recognized, the data transfer may be stopped or another action may be taken, based on instructions delivered by ICP **50**.

[054] **E-Mail Server & Client Spoofing**

[055] A CG **58** or the first SPA-controlled network element **54** capable of switching traffic inside the network may present itself to the subscriber terminal **60** as the associated subscriber's e-mail server, which may be a network element **54**. In addition, the CG **58** or the first SPA-controlled network element **54** capable of switching traffic inside the network may present itself to the subscriber's e-mail server as a subscriber terminal **60**. In this manner, CG **58** or the first network element **54** capable

DISH, Exh.1005, p.0036

of switching traffic inside the network acts as a two-way encryption/decryption point to enable inspection of what would otherwise be encrypted data. When e-mail is sent through CG **58** or the first network element **54** capable of switching traffic inside the network, all attached files are inspected using, for example, packet inspection techniques described above. Based on ICP-delivered instructions, CG **58** or the first network element **54** capable of switching traffic inside the network may then deny access to incoming files, stop transfer of outgoing files, or take other action.

[056] **Browser, Program Communications, & URL or IP Address Access Blocking**

[057] Under control of ICP **50**, CG **58** may block subscriber access to a list of URLs or IP addresses. When CG **58** registers with ICP **50** as "active", CG **58** receives from ICP **50** an update to its list of denied URL or IP addresses and its substitute list. The substitute list includes, for example, URLs or IP addresses to be substituted for certain URLs or IP addresses denied to the subscriber by CG **58**. A subscriber-entered request in a web browser program to display a denied URL or IP address or a program call made by a program running on subscriber terminal **60** to connect to a denied URL or IP address may be allowed to time out. Alternatively, CG **58** may present a substitute URL or IP address from its substitute list to be displayed to the subscriber. Time-out may occur when no substitute URL or IP address exists. An ISP may optionally allow a subscriber to submit entries to the list of denied URLs or IP addresses for parental control purposes. Converged CGs **58** may also use this blocking feature to grant access and deliver only ISP-provided video services that subscribers have

subscribed to, excluding all others. This blocking feature may also be used to block web sites for public policy, court-ordered or ISP policy purposes.

[058] **Event Notification**

[059] CGs **58** and SPA-controlled network elements **54** deliver an event notification to ICP **50** whenever a packet inspection match is made or an attempt to access a conditionally denied URL is detected.

[060] **Virus-Initiated Denial of Service Traffic Blocking**

[061] Repeated and rapid attempts to send data to one or a short list of URLs or IP addresses by any subscriber terminal **60** served by CG **58** are detected by CG **58** and traffic to the identified sites is not forwarded.

[062] **Voice over Internet Protocol (VoIP) Blocking**

[063] For subscribers who are not VoIP subscribers, CG **58** or SPA controlled network elements **54** may identify attempts to use VoIP services by recognizing destination URL, source URL, packet length, header information or packet contents. Incoming or outgoing VoIP packets may be discarded and an advertisement offering VoIP subscription service may be delivered and displayed to subscriber terminal **60**.

[064] **Real Time Video or Audio Streaming Blocking**

[065] For subscribers who are not real time quality-of-service subscribers, CG **58** or SPA controlled network elements **54** may identify attempts to use real time applications by recognizing destination URL, source URL, packet length, header information or packet contents. Incoming or outgoing real time packets may be discarded and an advertisement offering a real time streaming subscription service may be delivered and displayed to subscriber terminal **60**.

DISH, Exh.1005, p.0038

[066] **Real Time Video or Audio Quality-of-Service (QoS) Reduction**

[067] For subscribers who are not real time quality-of-service subscribers or who attempt to access portals that are known to offer illegal P2P file sharing, CG **58** or SPA controlled network elements **54** may identify real-time applications by recognizing destination URL, source URL, packet length, header information or packet contents. Upon identification, CG **58** or SPA controlled network elements **54** may reduce the speed with which traffic is delivered through reducing the duty cycle at which data is transferred. This may be done by insertion of TCP/IP messages, Nak/Ack or X-On/X-Off pairs. An advertisement offering real time QoS subscription service may be delivered if the site requested is not a known illegal P2P site.

[068] **Internet or Data Network Access Authentication**

[069] This technique prevents subscribers from substituting foreign gateways and logging on to Internet (broadband or narrowband remote) access servers without controls on their data flow.

[070] After ICP **50** has authorized the flow of data through a CG **58**, ICP **50** may send authorization instructions to access node **66** associated with the ISP providing ISP portal **62**. Access node **66** may be, for example, an internet access server or subscriber management system. The authorization instructions must be received by access node **66** before the subscriber may be authenticated and granted internet access.

[071] **Denial of Service and Spoofing Attacks on Sites Distributing Unlicensed Copyrighted Material**

[072] A method, consistent with the invention, for regulating user access to a plurality of content servers in a network is shown in **Figure 6**. First, at step **500**, a

DISH, Exh.1005, p.0039

network unit associated with a first group of users receives controller instructions from the network. Next, at step **502**, the network unit selectively inhibits access to a portion of the content servers by a second group of users in accordance with the controller instructions. Consistent with the present invention, this section describes the implementation of this method in more detail.

[073] Network units, including, for example, powered up and inactive CGs **58** and SPA-controlled network elements **54**, may be directed by instructions received from an ICP **50** to initiate repeated requests for service or other similar transactions to URLs or IP addresses of "pirate" sites, that is, sites that have been identified for interdiction in an ICP-delivered conditional denial of service list. ICP **50** may activate such attacks on any of several bases: "scheduled with duration," "real time activated" by ICP **50**, or "event driven." When attacks are "scheduled with duration", ICP **50** directs CG **58** to attack at a certain time and attack for a specified time interval. When attacks are "real time activated," ICP **50** directs CG **58** to immediately begin or end attacks. When attacks are "event driven," ICP **50** directs CG 58 to begin attacks upon instance of an event, such as entering inactive state. A "scheduled with duration" attack may be combined with an "event driven" attack so that an attack begins upon instance of an event and ends after a time interval specified by ICP **50**. In this way, subscribers not served by CGs **58** under ICP **50** control may also be denied access to copyrighted materials. Thus, the impact of initially deployed CGs **58** greatly expands to prevent access to pirated material in network **52**.

[074] In addition to directing denial of service attacks on URLs or IP addresses in the conditional denial of service list, ICP **50** may direct CGs **58** and SPA-controlled

network elements **54** to perform similar attacks on URLs or IP addresses identified by a government or law enforcement body including, for example, the Department of Defense. This technique would be desirable when, for example, an identified URL or IP address is being used to plan dangerous criminal or terrorist activities.

[075] Many P2P servers facilitate the distribution of unlicensed copyrighted content. Human operators using active intervention system **64** may discover the IP address or URLs of such servers. This may be accomplished via several methods, including, for example, subscribing to P2P services or using P2P software from multiple sources.

[076] The files being shared via P2P resource address servers may then be examined by the human operators to discover which Internet servers contain links to unlicensed copyrighted content. The URLs and IP addresses of P2P servers offering or containing links to unlicensed copyrighted material may be blocked by placing them on a blocked address list maintained by ICP **50**.

[077] Human operators then use active intervention system **64** to enter spoofing attack instructions by uploading to various P2P resource address servers substitute file pointers. The substitute file pointers specify to the servers the identities of what are supposedly unlicensed copyrighted files and re-direct access requests from P2P users seeking the unlicensed copyright files to substitute files. Network units, including, for example, powered up and inactive CGs **58** and SPA-controlled network elements **54**, may also be directed by instructions received from an ICP **50** to upload substitute file pointers to various P2P resource address servers.

DISH, Exh.1005, p.0041

[078] The substitute files may be, for example, non-working or defectively working files or may contain messages informing the user that access has been prevented and that legal copies may be obtained elsewhere.

[079] **Copyright Registry**

[080] A registry is centrally kept and enabled access by ICP **50**. Subscribers who have purchased copyrighted material may be registered by the seller or may self-register as owners of a license to use the material. Furthermore, non-copyrighted material may be registered in order to identify files having no limit on the number of copies made or that may be e-mailed or downloaded without intervention.

[081] **Copyrighted File Deletion**

[082] A powered-up inactive CG **58** may, under ICP **50** control, inspect the computer file system associated with any subscriber terminal **60** available to it on the network to which CG **58** is attached. CG **58** may notify ICP **50** of file names that match packet inspection patterns to identify the presence of copyrighted material to which the associated subscriber may not be entitled. Human intervention via active intervention system **64** or, alternatively, the copyright registry, may be used to verify a subscriber's entitlement to copyrighted materials found on the subscriber's file system. If no entitlement is found, a CG **58** associated with the file system may then delete the files to which the subscriber is not entitled.

[083] **First Portal Visibility ("First Portal")**

[084] The "first portal" feature is used to present to subscribers a specific URL, with content specified by the ISP, as the "first portal" page to be displayed to a subscriber upon launch of a web browser regardless of the subscriber's selection as

"home" in the web browser program running on subscriber terminal **60**. CG **58** delivers the "first portal" under ICP **50** direction. The "first portal" may be selected from a list of URLs or IP addresses upon web browser launch or resumption of activity when, for example, an inactivity timeout has occurred. ICP **50** may periodically change the list of URLs or IP addresses delivered to CG **58**. CG **58** receives the subscriber's URL requests via user interface **100** and delivers instead the "first portal" URL. The subscriber may be presented with a rotational scroll of URLs or IP addresses, in which each URL in the ICP-delivered list of URLs or IP addresses is presented in round robin fashion each time a new "first portal" opportunity is created. Alternatively, the list received from ICP **50** may consist of one URL or the URLs or IP addresses in the list may be processed by a weighting function so that some URLs appear more often than others. The specific weighting function may optionally be configured by an ISP.

[085] **Advertising**

[086] Under control of ICP **50**, ISP portal **62** may present a set of generalized and/or customized advertisements to subscriber terminal **60** during the presentation of pages from the "first portal" URL and during events specified by ISP portal **62**. CG **58** may receive, via network interface **102**, a list of advertisements or URLs or IP addresses from ICP **50** to be presented to the subscriber associated with subscriber terminal **60**. Ads can be customized by ICP **50** based on ISP input, subscriber input, zip code, URLs or IP addresses viewed by subscribers. A set of events that trigger the ad presentation to the browser on subscriber terminal **60** may be transferred from ICP **50** to CG **58** under operator control. Events may be time triggered or may include such things as new URL or IP ADDRESS requests or commencement or completion of data

DISH, Exh.1005, p.0043

transfer. Advertising may be delivered via pop-up windows, browser windows, e-mail messages or physical media sent to subscriber terminal **60**.

[087] **Service Applet Downloads**

[088] Subscribers who subscribe to fee-based services such as video calling, games or gambling may receive applet downloads from ICP **50** or from SPA content server **56**. The applet downloads may then be loaded to an associated subscriber terminal **60** or network appliance/controller. The applets are typically the resident software required for the service. CG **58**, under ICP **50** control, may restrict the applet download to only the services subscribed to by the subscriber. Applet updates may be delivered to a subscriber when they are on-line and CG **58** is registered with ICP **50** as active.

[089] **Law Enforcement Monitoring**

[090] Law enforcement or national security agencies worldwide have interests in monitoring use of the Internet and e-mail during "threat" situations. Such agencies are also charged with gaining access to Internet communications under legal warrants. With this feature, some or all data flowing through CG **58** or SPA-controlled network elements **54** may be copied to specific law enforcement or national security monitoring sites (not shown in figures). To send only a portion of traffic, the data stream may be monitored by a packet inspection engine at CGs **58** or SPA-controlled network elements **54** to sniff IP addresses or data and send selected traffic to appropriate agency sites. The monitoring is activated by a human interaction with ICP **50** via active intervention system **64** and monitoring instruction are then sent to the appropriate CG(s) **58** or SPA-controlled network element(s) **54.**

DISH, Exh.1005, p.0044

[091] **Pay Per View (PPV) Advertising**

[092] This technique allows subscribers to view advertising in a searchable format. The advertisements may be video, text, audio or a combination of two or all three media formats. A search result showing short descriptions of returned advertisements may be presented to the subscriber. The subscriber may then select an advertisement they are interested in viewing or listening to.

[093] When packaged with a video delivery service, subscribers may generally skip advertisements that are embedded in the video programming and may search advertisements with text input and receive advertisements that match their interest. For each advertisement viewed, the subscriber may be paid for viewing it. Payment may be nominal and used to stimulate high penetration of advertisement viewing by interested subscribers who are actually shopping and buying products presented in the advertisements.

[094] Playback of advertisements may be in a "click and play" mode, a "short play and skip to the next" mode or a "play until I say stop" mode. Conversion between playback modes may be controlled by the subscriber.

[095] PPV Advertisers may purchase placement high up in the listings. Subscribers may input weighting to search terms to raise or lower the placement order of advertisements for the display of search results.

[096] When PPV Advertising is packaged with audio delivery service, the audio equivalent to display weighting by the subscriber may be delivered by use of subscriber terminal **60** or a remote control. A subscriber may select a continuous playback of

DISH, Exh.1005, p.0045

advertisements mode or a "listen and skip" mode to allow the subscriber to listen to any portion then skip to the next advertisement.

[097] Text may be added to either video or audio services by use of a display embedded in the advertisement playback device.

[098] **Efficient Content Delivery using CG Based Caching / Storage and Access Network Bandwidth for Content Service Delivery**

[099] A method, consistent with the invention, for distributing content data over a network is shown in **Figure 7**. First, at step **600**, a first network unit receives content distribution instructions from the network. Next, at step **602**, the first network unit stores a first portion of content data from the network. Next, at step **604**, the first network unit initiates a request over the network, in accordance with the content distribution instructions and in response to a user request, for the remainder of the content data. At step **606**, the first network unit receives the remainder of the content data from the network. Then, at step **608**, the first network unit assembles the first portion of content data with the remainder of the content data. At step **610**, the first network unit supplies the assembled content data to the user. Finally at step **612**, the first network unit selectively forwards the first portion of content data to a second network unit in accordance with the content distribution instructions.

[0100] In more detail, consistent with the present invention, this method combines the use of network units, such as CGs **58**, that store a portion or slice of content being delivered with ICP control of content delivery so that CGs **58** are used to deliver content to one another from their small slice of content upon request by subscribers. SPA-controlled content server **56** first receives all the incoming content.

DISH, Exh.1005, p.0046

SPA-controlled content server **56** may be composed of any number of platforms. The incoming content may be video, music, books, software, games and so forth. Subsequent to receipt of the content, SPA-controlled content server **56** then distributes a sufficiently large fraction of the content for storage within CGs **58** within its subscriber network so as to reduce demand for data communication through its network connection. Individual CGs **58** receive controller instructions from ICP **50** and a small slice or portion of the total content. The slices of content thus downloaded to CGs **58** approach 100% of the content delivered. The slices of content thus downloaded are stored in a network partition of content storage **108** within each CG **58** to which SPA-controlled content server **56** has the only "write" permission and to which subscribers have only "read" permission and then only by request for the content and as directed to download the content from CG **58** or from SPA-controlled content server **56** to CG **58** by the ICP **50**. Content requested by subscribers may also be stored on this network partition of content storage **108**. A subscriber may have permission to delete content as a result of that subscriber's request. All subscriber "deletes" may be allowed immediately or delayed to a later event by ICP **50**, based upon the need to distribute the content from CG **58** to additional CGs to satisfy other subscriber requests. The IP address and other unique identifying information about which CG **58** holds which portion of content is tracked by SPA-controlled content server **56** and ICP **50**. This technique furthermore parses each individual file into smaller chunks and then places them in several sets of CGs **58** so as to place several "seed CGs" within the network that contain the same content. In this way, a storm of packets may be created that overcomes the imbalance between upstream and downstream bit rate speeds delivered

DISH, Exh.1005, p.0047

to CGs **58**. Many CGs with lower upstream (CG to network) rates can download data to a CG requesting a download with a higher downstream (network to CG) rate. In addition, SPA-controlled network elements **54** may aid in distribution of content by storing seeds, or slices of content, to be distributed so as to reduce demand on SPA-controlled content server **56**.

[0101] In response to a subscriber's request for content, the subscriber may have access to all content stored on the network partition of both their own CG and other CGs under control of ICP **50**. When many subscribers request the same content, then ICP **50** directs a replication of content as it is distributed to CGs **58**. "Replication" is a technique whereby the first CG to receive specific content forwards that content to other CGs. These other CGs may, in turn, download content to several subsequent CGs. Thus CG **58** selectively forwards the portion of the content file in accordance with instructions received from ICP **50**. In this manner, all CGs receive content in a shorter period of time. ICP **50** directs content to be delivered to the requesting subscriber's CG from SPA-controlled content server **56** if the file is not available from any other CG. Once a content file is resident in CG **58**, the associated subscriber may select it for playback. Content is either displayed on consumer electronics, displayed on subscriber terminals **60** or delivered to other terminals, as allowed by the content's license grant. Content delivered at a subscriber's request will be stored on the network partition of that subscriber's CG **58**. Playback, use of content with consumer electronics, and/or file transfer may be allowed, in accordance with the license grant.

[0102] ICP **50** keeps track of which CGs **58** are powered up and are active and available. ICP **50** also keeps track of the content that was written to the active CGs by

SPA-controlled content server **56**. Content may be purged from the CG network partitions on a regular basis by several methods. First, a "deletion date" may be used for each content file. Second, SPA-controlled content server **56** may purge content when new content is delivered, with SPA-controlled content server **56** notifying CG **58** of the purge. Third, the oldest content may be purged if space in the network partition is too small to accept new content. Fourth, subscribers may delete content previously downloaded at subscriber request.

[0103] CG **58** may also contain a user partition in which a subscriber may store his or her own content. The content stored in a user partition may be any file, including, for example, media, software, and data files. The content stored in a user partition may also be accessed by subscribers via subscriber terminal **60** or may be transferred to various consumer electronics at the subscriber location to be played or displayed.

[0104] **ICP, CG, and Network Element Database Structures**

[0105] Each ICP **50** may keep a master database used for control of SPA-controlled content servers **56**, CGs **58**, and SPA-controlled network elements **54**. The master database may be managed by a database system that is accessed by ICP software. Preferably, no storage space is allocated for record fields with null content. Each CG **58**, network element **54**, and SPA-controlled content server **56** may also keep a subset of the master database for use in processing.

[0106] The following sections describe the various types of data kept in ICP **50** master database and in CG **58**, network element **54**, and SPA-controlled content server **56** databases.

DISH, Exh.1005, p.0049

[0107] **Individual Managed CG, Network Element, Content Server and Provider/Subscriber Identifiers**

[0108] ICP **50**, CG **58**, network element **54**, and SPA-controlled content server **56** databases may each contain hardware records. ICP's **50** master database records may include an active record for each CG **58**, network element **54**, and SPA-controlled content server **56** managed by ICP **50** with a "history archive" including up to ten past records to account for subscriber, ISP portal **62**, network element **54**, CG **58**, and SPA-controlled content server **56** software changes. The information in master database records may include, for example, subscriber/contact name, company name, address, city, state, country, post code, telephone number, e-mail address, hardware addresses of CG **58**, SPA-controlled network element **54**, or SPA-controlled content server **56**, unique identifiers of CG 58, SPA-controlled network element **54** or SPA-controlled content server **56**, model number, serial number, hardware release version, software release version, law enforcement copy to URLs, events logged from CG **58**, network element **54** or SPA-controlled content server **56**, authentication pre-authorization URL or IP address, active process image ID, inactive process image ID, active/inactive flag, real time QoS Flag, and VoIP QoS Flag.

[0109] CG **58**, network element **54**, and SPA-controlled content server **56** database records may each include their own individual corresponding identifying information.

[0110] **Current Production Software Versions and Images by CG, Network Element or Content Server Model**

[0111] This record is kept only in ICP **50** master database. The following fields may be kept in the master database record for each managed CG **58**, network element **54** or SPA-controlled content server **56**: model number, hardware release version, software release version, current code image, last two code images, and release notes for customer support.

[0112] **Managing ICP List**

[0113] The managing ICP list data is kept only in CG **58**, SPA-controlled network element **54**, and SPA-controlled content server **56** databases. This data includes a list of URL or IP addresses for ICPs **50** that can control the associated CG **58**, network element **54**, or SPA-controlled content server **56**. The first entry is permanent and allows for initial registration and download of ICP addresses for the ISP associated with the specific CG, network element, or SPA-controlled content server.

[0114] **Active Process Image List**

[0115] ICP **50**, CG **58**, network element **54**, and SPA-controlled content server **56** databases each contain active process image list data. Active processes are sub-routines that may be executed by the production software running on each CG **58** when the CG is in an active state. The active processes can be changed by ICP **50**, without changing the current production software, whenever a CG **58**, SPA-controlled network element **54**, or SPA-controlled content server **56** performs an "I'm Active" login. Copies of active process routines may be downloaded to CGs **58**, SPA-controlled network elements **54**, or SPA-controlled content servers **56**, as directed by an image

DISH, Exh.1005, p.0051

distribution routine applied to ICP **50** by human input at active intervention system **64**. A human operator may identify a set of "unique identifiers" that may be loaded with each specific active process. The active process image list may be null.

[0116] **Idle Process Image List**

[0117] ICP **50**, CG **58**, network element **54**, and SPA-controlled content server **56** databases may each contain idle process image list data. Idle processes are sub-routines that may be executed by the production software running on each CG **58** when the CG is in an active state. The idle processes can be changed by ICP **50**, without changing the production software, whenever a CG **58**, SPA-controlled network element **54** or SPA-controlled content server **56** performs an "I'm Idle" login. The idle process images are downloaded to CGs **58**, SPA-controlled network elements **54**, or SPA-controlled content servers **56** as directed by an image distribution routine applied to ICP **50** by human input at active intervention system **64**. The human operator may identify a set of "unique identifiers" that may be loaded with each specific idle process. The idle process image list may be null.

[0118] **P2P Idle Process Attack URL List**

[0119] P2P idle process attack URL list data is kept only in ICP **50** and CG **58** databases. The data contains a list of URLs or IP addresses of sites containing illegally distributed unlicensed materials that may be attacked by the idle process. The list may be null. This list contains a set of flags to define the type of content the illegal sites are known by active intervention system **64** to offer.

DISH, Exh.1005, p.0052

[0120] **Department of Defense (DOD) Idle Process Attack URL List**

[0121] DOD idle process attack URL list data is kept only in ICP **50,** CG **58**, and SPA-controlled network elements **54** databases. This is a list of URLs or IP addresses, generated by DOD, of sites that are to be attacked during the idle process. The list may be null.

[0122] **"First Look" URL List**

[0123] "First look" URL list data is kept only in ICP **50** and CG **58** databases. The data contains lists of URLs or IP addresses that will be presented to subscribers with the "first portal" browser screen. This list may be null, or may have one or more entries. Multiple entries may be cycled through by a routine built into ICP **50** or CG **58** software.

[0124] **Advertisement Insertion URL List**

[0125] Advertisement insertion URL list data is kept only in ICP **50** and CG **58** databases. The data contains a list of URLs or IP addresses that are presented to subscribers as "advertising" browser screens. This list may be null, or may have one or more entries. Multiple entries may be cycled through by a routine built into CG **58**.

[0126] **Legal Content URL List**

[0127] Legal content URL list data is kept only in ICP **50** and CG **58** databases. The data contains a list of URLs or IP addresses that are presented to subscribers as legal content sites when they attempt to connect their browser to a URL or IP address that is on the "P2P Blocked URL" List. This list may be null, or may have one or more entries. Multiple entries will be cycled through by a routine built into the CG **58**. The content flags from the P2P Blocked URL list are used by active CG **58** or SPA-

DISH, Exh.1005, p.0053

controlled content server **56** processes to present the subscriber with a browser screen containing links to "Legal Content URLs" that match what the subscriber tried to access.

[0128] **P2P Blocked URL List**

[0129] P2P blocked URL list data is kept only in ICP **50** and CG **58** databases. The data contains a list of URLs or IP addresses of sites containing illegally distributed unlicensed materials that are to be blocked from access by the active process. The list may be null. This list contains a set of flags to define the type of content the illegal sites are known by active intervention system **64** to offer. The flags are used by CG **58** software to present a browser screen to subscribers containing "Legal Content Sites" that offer similar content to what the P2P Blocked URL offers when they try to point their browser to a site on this list.

[0130] **P2P QoS Restriction URL List**

[0131] P2P QoS restriction URL list data is kept only in ICP **50** and CG **58** databases. The data contains a list of URLs or IP addresses of sites containing illegally distributed unlicensed materials whose throughput to and from subscribers is to be severely constricted by the active process. The list may be null. This list contains a set of flags to define the type of content the illegal sites are known by active intervention system **64** to offer. The flags are used by CG **58** active software to present a "first portal" or advertising browser screen to subscribers containing "legal content sites" that offer similar content to what the P2P QoS restricted URL Offers.

[0132] **Portal Blocked URL List**

[0133] Portal blocked URL list data is kept only in ICP **50**, CG **58**, and network element **54** databases. The data contains a list of URLs or IP addresses that are

DISH, Exh.1005, p.0054

blocked as dictated by ISP policy or as required by regulators or court order. Blocking is performed by CG **58** active process or network element **54**. The list may be null. The list is used by the active process to present a browser screen to subscribers containing a "URL not available" message, or something similar, to the requesting subscriber.

[0134] **Portal QoS Restriction URL List**

[0135] Portal QoS restriction URL list data is kept only in ICP **50**, CG **58**, and network element **54** databases. The data contains a list of URLs or IP addresses of sites whose QoS are to be severely restricted by CG **58** active process or SPA-controlled network element **54** due to lack of contractual arrangements with an associated ISP to deliver high throughput or a high level of traffic generated into the network. The list may be null. Such restriction controls core network costs for an ISP.

[0136] **Law Enforcement Agency "Copy To" List**

[0137] Law enforcement agency "copy to" list data is kept only in ICP **50**, CG **58**, and network element **54** databases. The data contains a list of CGs **58**, SPA-controlled network elements **54** or SPA-controlled content servers **56** being wiretapped, identified by a unique identifier, and the URL or IP address of the law enforcement site(s) to whose URL the traffic is to be copied. It is created by human input at active intervention system **64** upon receipt of a legal wiretap order. The list may be null. More than one agency may be copied.

[0138] **Packet Inspection Pattern List**

[0139] Packet inspection pattern list data is kept only in ICP **50**, CG **58**, and network element **54** databases. The data contains a list of patterns that the packet inspection routine in CGs **58** or SPA-controlled network elements **54** use to discover

DISH, Exh.1005, p.0055

patterns that indicate viruses, traffic caused by viruses, or other unwanted data that is being sent into network **52**.

[0140] **Received Event Log**

[0141] Received event log data is kept only in ICP **50** master database. The data contains a log of events reported by CGs **58**, SPA-controlled content servers **56** or SPA-controlled network elements **54** to ICP **50**. It may contain three fields: a unique ID for the CG **58** reporting it, an event ID and an event description.

[0142] **Sent Event Log**

[0143] Sent event log data is kept only in the CG **58**, network element **54**, and SPA-controlled content server **56** databases. The data contains a log of the events reported by CG **58**, network element **54**, or SPA-controlled content server **56** to ICP **50**. It may contain three fields: a unique ID for CG **58**, network element **54**, or SPA-controlled content server **56** reporting it, an event ID and an event description.

[0144] **Copyright Registry**

[0145] Copyright registry data is kept only in ICP **50** master database. The data contains identifying information from the copyright holder or subscriber registrant and a file of the entire content that has been registered. Information from the files are used to produce file signatures that the packet inspection process may use to discover that a copyrighted work is being sent or received by e-mail and to block it.

[0146] **Content In-Net**

[0147] Content in-net data is kept only in ICP **50** master database. The data contains metadata for content that is presently available for subscriber download. Also the data may contain a set of pointers for each metadata file showing which SPA-

DISH, Exh.1005, p.0056

controlled content servers **56** or CGs **58** have which portions of the content file presently available for download to CGs **58**. In addition, the data may contain a set of pointers for each metadata file showing which of the SPA-controlled content servers **56** or CGs **58** are to replicate the content and metadata file and a progress indicator for the status of content download to other CGs **58**.

[0148] **Content On-Board and being downloaded**

[0149] Content on-board and being downloaded data is kept only in the CG **58** and SPA-controlled content server **56** databases.

[0150] In CG **58** this data may contain metadata for content that is presently available for subscriber download or viewing. The data may also contain a set of pointers (sent from ICP **50**) for each content file being downloaded showing which SPA-controlled content servers **56** or CGs **58** have which portions of the content file presently available for download to the CG **58**. The data may also contain a set of pointers (sent from ICP **50**) for each "seed" content file contained in CG **58** showing to which other CGs CG **58** is to replicate the content and metadata file to and a progress indicator for the status of content download to other CGs **58**.

[0151] In SPA-controlled content server **56** this data may contain metadata for content that is presently available from SPA-controlled content server **56** for subscriber download from the corresponding SPA-controlled content server **56** to CG **58**. The data may also contain a pointer for each metadata file showing which CGs **58** are to have the content file downloaded to them and a progress indicator for the status of content download to the CGs **58**.

DISH, Exh.1005, p.0057

[0152] **Pre-Authorization Flag**

[0153] Pre-authorization flag data is kept only in ICP **50**, network element **54**, and SPA-controlled content server **56** databases. This data is used to ensure that the CG **58** being used by the subscriber is "ICP Managed." It is updated every time a CG goes from idle to active or active to idle, which is a transaction initiated by CG **58**. An un-populated pre-authorization flag is used by SPA-controlled network elements **54** or SPA-controlled content servers **56** to deny service to subscribers attempting to access network **52** with non-managed CGs **58**.

[0154] This invention is not limited to the embodiments as explained above, but can be performed using various configurations. It will be apparent to those skilled in the art that various modifications and variations can be made in the context of the present invention, and in its practice, without departing from the scope and spirit of the invention.

DISH, Exh.1005, p.0058

WHAT IS CLAIMED IS:

1. A system for regulating access to a network, the system comprising:

a controller node coupled to the network, the controller node comprising:

a first processor for generating controller instructions; and

a first network interface for transmitting the controller instructions over the network; and

a plurality of gateway units, the gateway units comprising:

a user interface receiving user-entered network access requests;

a second network interface coupled to the network and receiving the controller instructions from the network; and

a second processor, the second processor selectively transmitting at least some of the network access requests over the network in accordance with the controller instructions, and transferring content data responsive to the transmitted network access requests over the network via the second network interface.

2. The system of claim 1 wherein:

the gateway units further comprise a storage device for storing instructions;

the gateway units further comprise an identifier uniquely associating the gateway units with a user; and

the storage device is operable to store user-specific information.

DISH, Exh.1005, p.0059

3. The system of claim 1, wherein:

the gateway units comprise a user interface receiving requests to transmit data; and

the gateway units comprise a second processor inspecting the data to selectively transfer the data in accordance with the controller instructions.

4. The system of claim 1, wherein:

the gateway units comprise a user interface receiving requests to receive data; and

the gateway units comprise a second processor inspecting the data to selectively transfer the data in accordance with the controller instructions.

5. The system of claim 1, wherein the first processor generates the controller instructions automatically.

6. The system of claim 1, wherein the first processor generates the controller instructions in response to an operator-entered request.

7. The system of claim 1, wherein the controller nodes comprise a first processor generating the controller instructions by operator-controlled network crawling.

8. The system of claim 1, wherein the controller nodes comprise a first processor generating the controller instructions to deny user access to a first group of network

servers.

9. The system of claim 8, wherein the gateway units comprise a second processor to generate a notification to a controller node if a network access request designates a network server of the first group of network servers.

10. The system of claim 8, wherein the gateway units comprise a second processor to:

detect a network access request designating a network server a first group of network servers; and

re-direct the access request to a second group of network servers, in accordance with the controller instructions.

11. The system of claim 1, wherein:

the controller nodes comprise a first processor generating the controller instructions, the controller instructions including a file identifier; and

the system comprises a plurality of gateway units associated with a user file system, the gateway units comprising a second processor to detect a file in a user file system corresponding to the file identifier.

12. The system of claim 11, wherein the gateway units are operable between an active state and an inactive state.

DISH, Exh.1005, p.0061

13. The system of claim 12, wherein the second processors notify a controller node if the associated gateway unit enters an inactive state.

14. The system of claim 12, wherein the second processors delete the detected files from a user file system in accordance with the controller instructions.

15. The system of claim 14, wherein the second processors delete the detected files from a user file system during the inactive state.

16. The system of claim 11, wherein the gateway units notify a controller node if a file corresponding to the file identifier is detected.

17. The system of claim 1, wherein the gateway units comprise:

a housing; and

a detector for detecting an attempt to open the housing.

18. The system of claim 17, wherein the gateway unit notifies the controller node of a detected attempt to open the housing after a user-initiated event.

19. The system of claim 17, wherein the gateway units comprise a storage device and the second processor prevents access to the storage device when the detector detects an attempt to open the housing.

DISH, Exh.1005, p.0062

20. The system of claim 1, wherein the gateway units comprise a second processor that enters a user-controlled operational mode after receiving permission from the controller node.

21. The system of claim 1, wherein the controller node comprises a copyright registry for tracking copyright status of content data files distributed to gateway units in the system.

22. The system of claim 21, wherein the user interface receives registrations of the content data files for transmission to the copyright registry.

23. The system of claim 1, wherein the second processor causes the gateway unit to access a predetermined network site upon initiation of network browser software, in accordance with the controller instructions.

24. The system of claim 23, wherein the second processor selects the predetermined network site from a list of predetermined network sites received via the controller instructions.

25. The system of claim 24, wherein the second processor selects the predetermined network site according to a weighting function such that at least a portion of the predetermined network sites are selected more often than others.

DISH, Exh.1005, p.0063

26. The system of claim 1, wherein the gateway units:

receive registration information from a user via the user interface; and

receive initial operating parameters via the second network interface.

27. The system of claim 1, wherein the gateway units:

receive registration information from a user via the user interface; and

receive software updates via the second network interface.

28. The system of claim 1, wherein:

the gateway units transmit advertising via the user interface to a user display, the advertising being customized in accordance with information received via at least one of the second network interface and the user interface.

29. The system of claim 1, wherein the gateway units:

transmit pay-per-view advertising via the user interface for selective display by a user; and

generate payment credits for the user upon display of the advertising by the user.

30. The system of claim 29, wherein the gateway units generate one of a plurality of viewing modes for viewing the pay-per-view advertising in response to a user selection.

31. The system of claim 1, wherein the gateway units receive software via the second network interface for execution on the second processor, the software enabling

at least one of a fee-based network service, network video calling, and network gaming.

32. The system of claim 1, wherein the second processor detects a denial-of-service attack.

33. The system of claim 32, wherein the second processor detects a denial-of-service attack initiated by a virus.

34. The system of claim 1, wherein the gateway units selectively transmit to law enforcement terminals information describing at least one of incoming data and outgoing data to the gateway units.

35. The system of claim 1, wherein the gateway units:

detect a user attempt to at least one of transmit and receive voice traffic; and

selectively block the detected attempt in accordance with the controller instructions.

36. The system of claim 35 wherein the gateway units transmit, via the user interface, an advertisement offering voice transmission services.

37. The system of claim 1, wherein the gateway units:

detect a user attempt to at least one of transmit and receive at least one of audio and video traffic; and

selectively block the detected attempt in accordance with the controller instructions.

38. The system of claim 37, wherein the gateway units transmit, via the user interface, an advertisement offering at least one of audio and video traffic services.

39. The system of claim 1, wherein the gateway units:

detect at least one of audio and video traffic flowing through the second network interface; and

selectively reduce the quality of service of the at least one of audio and video traffic in accordance with the controller instructions,

wherein reduction of quality of service comprises at least one of: reducing a duty cycle, inserting TCP/IP messages in the at least one of audio and video traffic, inserting Nak/Ack pairs in the at least one of audio and video traffic, and inserting X-On/X-Off pairs in the at least one of audio and video traffic.

40. The system of claim 1, further comprising a plurality of access nodes, wherein the controller node comprises a first processor for generating authorization instructions and transmitting the authorization instructions over the network to the access nodes, and the access nodes:

receive the authorization instructions from the controller node; and

selectively permit the gateway units to access the network in accordance with the

DISH, Exh.1005, p.0066

authorization instructions.

41. The system of claim 1, wherein the gateway units comprise data storage units partitioned into a network portion and a user portion, and at least one of a first group of gateway units selectively shares data stored in the network partition with at least one of a second group of gateway units, via the second network interface, in accordance with the controller instructions.

42. The system of claim 1, wherein the second processor in at least a first one of the gateway units selectively forwards content data received from at least a second one of the gateway units to at least a third one of the gateway units in accordance with the controller instructions.

43. The system of claim 42 wherein the second processor in at least a first one of the gateway units:

receives portions of a content data file from a group of gateway units in accordance with the controller instructions; and

assembles a data file based on the received portions for transmission to the user via the user interface.

44. The system of claim 1, further comprising an intervention node, the intervention node comprising:

an operator interface for receiving operator-entered spoofing attack instructions;

DISH, Exh.1005, p.0067

and

a third network interface for transmitting at least one substitute file pointer to addresses in the network in accordance with the spoofing attack instructions.

45. The system of claim 1, further comprising network units, the network units comprising:

a network interface coupled to the network and receiving the controller instructions from the network and network traffic from a gateway unit; and

a processor for selectively reducing the flow of the received network traffic in accordance with the controller instructions.

46. The system of claim 45, wherein the network units:

detect the flow of voice traffic; and

selectively block the detected traffic in accordance with the controller instructions.

47. The system of claim 45, wherein the network units:

detect the flow of at least one of audio and video traffic; and

selectively block the detected traffic in accordance with the controller instructions.

48. The system of claim 45, wherein the network units:

detect the flow of at least one of audio and video traffic; and

selectively reduce the quality of service of the detected at least one of audio and video traffic in accordance with the controller instructions,

wherein the reduction of quality of service comprises at least one of: reducing a duty cycle, inserting TCP/IP messages in the at least one of audio and video traffic, inserting Nak/Ack pairs in the at least one of audio and video traffic, and inserting X-On/X-Off pairs in the at least one of audio and video traffic.

49. A system for regulating access to a network that is accessed by a plurality of users, the system comprising:

a controller node coupled to the network, the controller node comprising:

a first processor for generating controller instructions; and

a first network interface for transmitting the controller instructions over the network; and

a plurality of network units associated with a first group of users, the network units comprising:

a second network interface coupled to the network and receiving the controller instructions from the network; and

a second processor, the second processor inhibiting access for a second group of users to content in the network in accordance with the controller instructions.

50. The system of claim 49, wherein the second processor in the network units inhibits access for a second group of users by performing denial of service attacks in accordance with the controller instructions.

51. The system of claim 50, wherein the second processor performs attacks based on a schedule comprising at least one of:

a schedule based on duration of the attacks;

real time response to controller instructions; and

in response to an event.

52. The system of claim 49, wherein at least a portion of the network units comprise gateway units uniquely associated with a user.

53. The system of claim 52, wherein the gateway units:

are operable between an active state and an inactive state; and

perform denial of service attacks, in accordance with the controller instructions, during the inactive state.

54. The system of claim 49, wherein the second processor detects a denial-of-service attack.

55. The system of claim 54, wherein the second processor detects a denial-of-service attack initiated by a virus.

56. The system of claim 54, wherein the second processor prevents a denial-of-service attack upon detection.

DISH, Exh.1005, p.0070

57. The system of claim 49, wherein the network units selectively transmit to law enforcement terminals information describing at least one of incoming data and outgoing data to the gateway units.

58. A system for distributing content over a network, the system comprising:

a controller node coupled to the network, the controller node comprising:

a first processor for generating controller instructions; and

a first network interface for transmitting the controller instructions over the network; and

a plurality of network units, the network units comprising:

a second network interface coupled to the network, the second network interface in at least a first one of the network units receiving the controller instructions from the network and receiving a first portion of a content data file from at least a second one of the network units; and

a second processor, the second processor in the at least a first one of the network units selectively forwarding the received first portion of the content data file to at least a third one of the network units in accordance with the controller instructions.

59. The system of claim 58, wherein:

the second network interface receives a plurality of portions of a content data file from a group of network units in accordance with the controller instructions; and

the second processor assembles a data file based on the received portions for transmission to the user via the user interface.

DISH, Exh.1005, p.0071

60. The system of claim 58, wherein:

the second network interface of the second network unit receives a portion of a content data file from a content server; and

the second processor of the second network unit forwards the portion of the content data file to the at least first one of the network units in accordance with the controller instructions.

61. The system of claim 58, wherein the second processor deletes portions of content data in accordance with a predetermined deletion date associated with the content data.

62. The system of claim 58, wherein the second processor deletes portions of content data when new content data is delivered.

63. The system of claim 58, wherein the second processor deletes portions of content data when insufficient storage space remains, deleting oldest content data first.

64. The system of claim 58, wherein the second processor deletes portions of content data in accordance with an associated user's selections.

65. A gateway unit for regulating access to a network comprising:

a user interface to receive requests to transmit data;

a network interface to receive controller instructions from the network; and

a processor to inspect the data and to selectively transmit the data in accordance with the received controller instructions.

66. A gateway unit for regulating access to a network comprising:

a user interface to receive requests to receive data;

a network interface to receive controller instructions from the network; and

a processor to inspect the data and selectively receive the data in accordance with the received controller instructions.

67. A controller node for regulating access to a network, the controller node comprising:

a processor to generate controller instructions for causing a plurality of gateway units to selectively transfer user-entered network access requests over the network, the processor generating the controller instructions by at least one of automatically generating instructions and generating instructions in response to an operator-entered request; and

a network interface to transmit the controller instructions over the network to the plurality of gateway units.

68. The controller node of claim 67, comprising a processor to generate the controller instructions by operator-controlled network crawling.

DISH, Exh.1005, p.0073

69. A controller node for regulating access to a network comprising:

a processor to generate controller instructions; and

a network interface to transmit the controller instructions over the network to a plurality of gateway units, the controller instructions causing at least one gateway unit to deny access to a first group of network servers.

70. The controller node of claim 69, wherein the network interface receives notification from at least one gateway unit if the at least one gateway unit detects a request to access a denied network server.

71. The controller node of claim 69, wherein the processor generates instructions causing a gateway unit to re-direct user access requests to a second group of network servers in accordance with the controller instructions.

72. A system for regulating file access in a network, the system comprising:

a controller node coupled to the network, the controller node comprising:

a first processor for generating controller instructions, the instructions including a file identifier; and

a first network interface for transmitting the controller instructions over the network; and

a plurality of gateway units associated with user file systems, the gateway units comprising

a second network interface to receive the controller instructions from the

network; and

a second processor to detect files in the user file systems corresponding to the file identifier.

73. The system of claim 72, comprising a plurality of gateway units operable between an active state and an inactive state.

74. The system of claim 73, wherein the gateway units notify a controller node upon entering the inactive state.

75. The system of claim 73, wherein the gateway units comprise a processor to delete the detected files during the inactive state.

76. The system of claim 72, wherein the plurality of gateway units notify a controller node if at least one file matching the list of file identifiers is detected.

77. A gateway unit for regulating access to a network, comprising:

a user interface receiving user-entered network access requests;

a network interface for transmitting the network access requests to the network;

a housing; and

a detector for detecting a user attempt to open the housing.

DISH, Exh.1005, p.0075

78. The gateway unit of claim 77, wherein the detector notifies the controller node of a detected attempt to open the housing after a subsequent user-initiated event.

79. The gateway unit of claim 77 further comprising a storage device and an interlock to prevent access to the storage device when the detector detects an attempt to open the housing.

80. A gateway unit for regulating access to a network, comprising:

a network interface for providing access to the network;

a user interface to receive user-entered network access requests; and

a processor that enters a user-controlled operational mode after receiving permission over the network from a controller node via the network interface.

81. A controller node for regulating file access in a network, comprising a copyright registry and a processor, wherein the processor:

receives registrations of content data files distributed to a plurality of gateway units; and

tracks copyright status of the content data files.

82. A gateway unit for regulating access to a network comprising:

a network interface for providing access to the network and for receiving controller instructions from the network;

a user interface for transferring content between the network and a user; and

a processor for connecting to a predetermined network site upon initiation of network browser software, in accordance with the received controller instructions.

83. The plurality of gateway units of claim 82, wherein the processor selects the predetermined network site from a list of predetermined network sites.

84. The plurality of gateway units of claim 83, wherein the processor selects from the list of predetermined network sites according to a weighting function such that at least a portion of the predetermined network sites are selected more often than others.

85. A gateway unit for regulating access to a network comprising:

a network interface to provide access to the network;

a user interface to transfer content between the network and a user; and

a processor to gather registration information from the user via the user interface and to receive initial operating parameters via the network interface.

86. A gateway unit for regulating access to a network comprising:

a network interface to provide access to the network;

a user interface to transfer content between the network and a user; and

a processor to gather registration information from the user via the user interface and to receive software updates via the network interface.

DISH, Exh.1005, p.0077

87. A gateway unit for regulating access to a network comprising:

a network interface to receive information from the network;

a user interface to receive information from a user; and

a processor to transmit advertising via the user interface to a user display,

wherein the advertising is customized in accordance with information received via at least one of the network interface and the user interface.

88. A gateway unit for regulating access to a network comprising:

a network interface to provide access to the network and to receive pay-per-view advertising from the network;

a user interface to transfer content between the network and a user; and

a processor to transmit the pay-per-view advertising via the user interface for selective display by a user and to generate payment credits to the user upon display of the advertising by the user.

89. The gateway unit of claim 88, wherein the processor generates one of a plurality of viewing modes for viewing the pay-per-view advertising in response to a user selection.

90. A gateway unit for regulating access to a network comprising:

a network interface to provide access to the network and to receive software from the network;

a user interface to transfer content between the network and a user; and

DISH, Exh.1005, p.0078

a processor to execute the software to enable the user to use, via the user interface, at least one of a fee-based network service, network video calling, and network gaming.

91. A gateway unit for regulating access to a network comprising:

a network interface to provide access to the network;

a user interface to receive network access requests from a user; and

a processor to detect a denial-of-service attack received from the user interface and transmitted to the network via the network interface.

92. The plurality of gateway units of claim 91, wherein the processor detects a denial-of-service attack initiated by a virus.

93. A gateway unit for regulating access to a network comprising:

a network interface to provide access to the network and to receive controller instructions;

a user interface to transfer incoming data and outgoing data between a user and the network interface; and

a processor to selectively transmit to law enforcement terminals information describing at least one of the incoming data and the outgoing data in accordance with the received controller instructions.

DISH, Exh.1005, p.0079

94. A gateway unit for regulating access to a network comprising:

a network interface to provide access to the network and to receive controller instructions;

a user interface to transfer traffic between the network and a user; and

a processor to detect a user attempt to at least one of transmit and receive voice traffic over the network, the processor selectively blocking the detected attempt in accordance with the received controller instructions and transmitting, via the user interface, an advertisement offering voice transmission services.

95. A gateway unit for regulating access to a network comprising:

a network interface to provide access to the network and to receive controller instructions;

a user interface to transfer traffic between the network and a user; and

a processor to detect a user attempt to at least one of transmit and receive at least one of audio and video traffic over the network, the processor selectively blocking the detected attempt in accordance with the received controller instructions and transmitting, via the user interface, an advertisement offering at least one of audio and video traffic services.

96. A gateway unit for regulating access to a network comprising:

a network interface to provide access to the network and to receive controller instructions;

a user interface to transfer traffic between the network and a user; and

DISH, Exh.1005, p.0080

a processor to detect at least one of audio and video traffic flowing through the user interface, the processor selectively reducing the quality of service of the detected at least one of audio and video traffic in accordance with the received controller instructions,

wherein reduction of quality of service comprises at least one of: reducing a duty cycle, inserting TCP/IP messages in the at least one of audio and video traffic, inserting Nak/Ack pairs in the at least one of audio and video traffic, and inserting X-On/X-Off pairs in the at least one of audio and video traffic.

97. A network unit for regulating access to a network comprising:

a network interface to provide access to the network and to receive controller instructions and network traffic; and

a processor to detect voice traffic over the network, the processor selectively blocking the traffic in accordance with the received controller instructions.

98. A network unit for regulating access to a network comprising:

a network interface to provide access to the network and to receive controller instructions and network traffic; and

a processor to detect at least one of audio and video traffic over the network, the processor selectively blocking the traffic in accordance with the received controller instructions.

99. A network unit for regulating access to a network comprising:

a network interface to provide access to the network and to receive controller instructions and network traffic; and

a processor to detect at least one of audio and video traffic, the processor selectively reducing the quality of service of the detected at least one of audio and video traffic in accordance with the received controller instructions,

wherein reduction of quality of service comprises at least one of: reducing a duty cycle, inserting TCP/IP messages in the at least one of audio and video traffic, inserting Nak/Ack pairs in the at least one of audio and video traffic, and inserting X-On/X-Off pairs in the at least one of audio and video traffic.

100. A controller node for regulating subscriber access to a network comprising:

a processor to generate authentication instructions on behalf of an authenticated subscriber; and

a network interface to transmit the authentication instructions to an access node coupled to the network,

wherein the access node selectively permits subscriber access to the network in accordance with the authentication instructions.

101. A gateway unit for regulating access to a network comprising:

a network interface to provide access to the network and to receive controller instructions;

a data storage unit partitioned into a network portion and a user portion; and

DISH, Exh.1005, p.0082

a processor to selectively transmit data stored in the network partition, via the network interface, in accordance with the received controller instructions.

102. A network unit for regulating access to a network, comprising:

a user interface receiving user-entered network access requests;

a network interface coupled to the network and receiving controller instructions from the network; and

a processor, the processor selectively transmitting at least some of the network access requests over the network in accordance with the controller instructions, and transferring content data responsive to the transmitted network access requests over the network via the network interface;

wherein the network unit selectively forwards content data received from a first associated network unit to at least a second associated unit in accordance with the controller instructions.

103. The network unit claim 102, wherein the processor

receives portions of a content data file from a group of third associated network units in accordance with the controller instructions; and

assembles a data file based on the received portions for transmission to a user via the user interface.

104. The network unit of claim 102, wherein the processor:

receives a portion of a content data file from a content server; and

DISH, Exh.1005, p.0083

forwards the portion of the content data file to the first associated network unit in accordance with the controller instructions.

105. A network unit for regulating access to a network comprising:

a network interface to provide access to the network and to receive controller instructions;

a processor to perform denial of service attacks in accordance with the received controller instructions.

106. A method for regulating access to a network, the method comprising:

receiving controller instructions from a network at a gateway unit associated with a user;

receiving a network access request at the gateway unit from a user;

selectively transmitting the network access request over the network in accordance with the controller instructions; and

receiving content data responsive to the transmitted network access request from the network.

107. A method for regulating access to a plurality of content servers, the method comprising:

receiving controller instructions from the network at a network unit associated with a first group of users; and

selectively inhibiting access to a portion of the content servers by a

DISH, Exh.1005, p.0084

second group of users in accordance with the controller instructions.

108. The method of claim 107, wherein inhibiting access for a second group of users comprises performing denial of service attacks.

109. A method for distributing content data over a network, the method comprising:

receiving content distribution instructions from the network;

storing a first portion of content data from the network at a first network unit;

initiating a request over the network, in accordance with the content distribution instructions and in response to a user request, for the remainder of the content data;

receiving the remainder of the content data from the network;

assembling the first portion of content data with the remainder of the content data; and

supplying the assembled content data to the user.

110. The method of claim 109, further comprising selectively forwarding the first portion of content data to a second network unit in accordance with the content distribution instructions.

111. A gateway unit for regulating access to a network, the gateway unit comprising:

a user interface receiving user-entered network access requests;

a network interface coupled to the network and receiving controller instructions

DISH, Exh.1005, p.0085

from a controller node in the network; and

a processor, the processor selectively transmitting at least some of the network access requests over the network in accordance with the controller instructions, and transferring content data responsive to the transmitted network access requests over the network via the network interface.

112. A network unit associated with a first group of users for regulating access to a network, the network unit comprising:

a network interface coupled to the network and receiving controller instructions from a controller node associated with the first group of users; and

a processor, the processor inhibiting access for a second group of users to content in the network in accordance with the controller instructions.

113. A controller node for regulating access to a network, the controller node comprising:

a processor for generating controller instructions; and

a network interface for transmitting the controller instructions over the network, the controller instructions being configured to cause a user-associated gateway unit to selectively transmit over the network at least some user-entered network access requests.

114. The controller node of claim 113 further comprising a content server for providing content data in response to the user-entered network access requests.

115. A controller node for regulating access to a network, the controller node comprising:

a processor for generating controller instructions; and

a network interface for transmitting the controller instructions over the network to network units associated with a first group of users, the controller instructions being configured to cause the network units to inhibit access for a second group of users to content in the network.

DISH, Exh.1005, p.0087

ABSTRACT OF THE DISCLOSURE

There is provided a system for regulating access and managing distribution of content in a network, such as the Internet. The system includes communication gateways, installed at a subscriber site, internet control points, installed remotely, and various network elements installed throughout the network. The communication gateways and network elements operate in conjunction with the internet control points to restrict or allow access to specified Internet sites and to manage efficient distribution of content such as music, video, games, broadband data, real-time audio and voice applications, and software to subscribers.

DISH, Exh.1005, p.0088

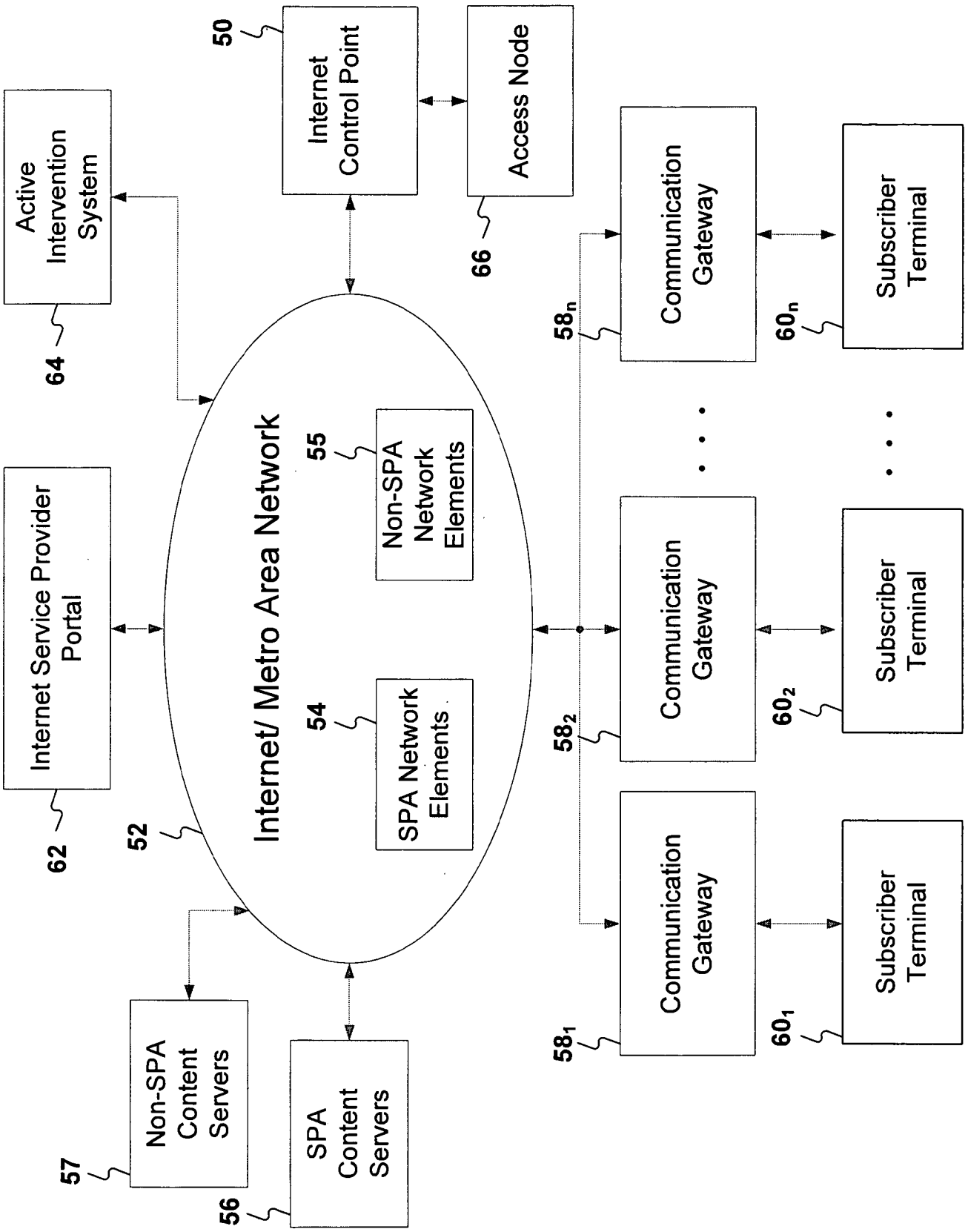
Internet Control Point
50
Access Node
66
Active Intervention System
64
Internet Service Provider Portal
62
Internet/ Metro Area Network
52
Non-SPA Network Elements
55
SPA Network Elements
54
Communication Gateway
58_n
Subscriber Terminal
60_n
Communication Gateway
58_2
Subscriber Terminal
60_2
Communication Gateway
58_1
Subscriber Terminal
60_1
Non-SPA Content Servers
57
SPA Content Servers
56

Figure 1

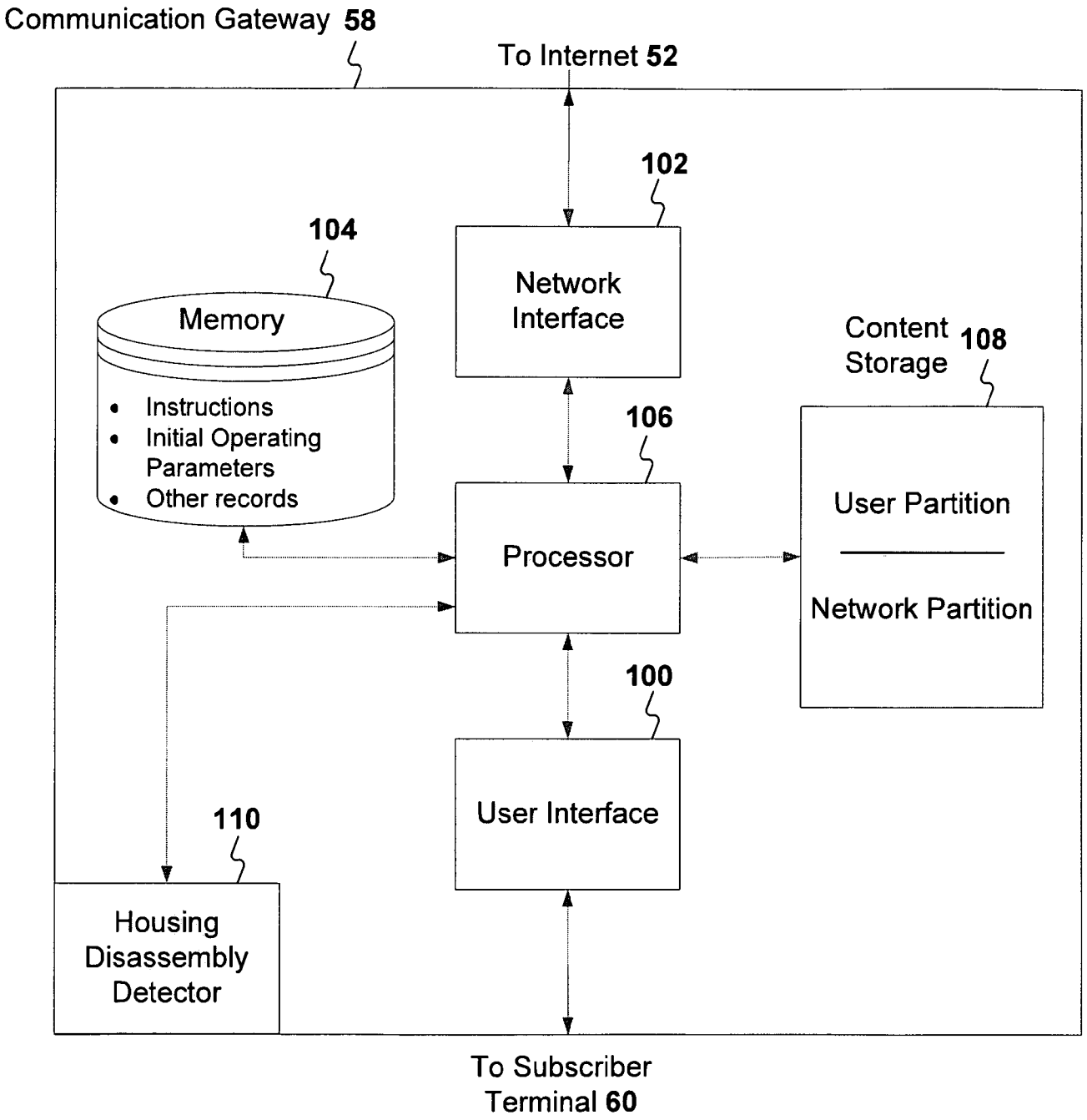
Communication Gateway 58
To Internet 52
102
104
Memory
• Instructions
• Initial Operating Parameters
• Other records
Network Interface
Content Storage 108
106
User Partition
Network Partition
Processor
100
User Interface
110
Housing Disassembly Detector
To Subscriber Terminal 60

Figure 2

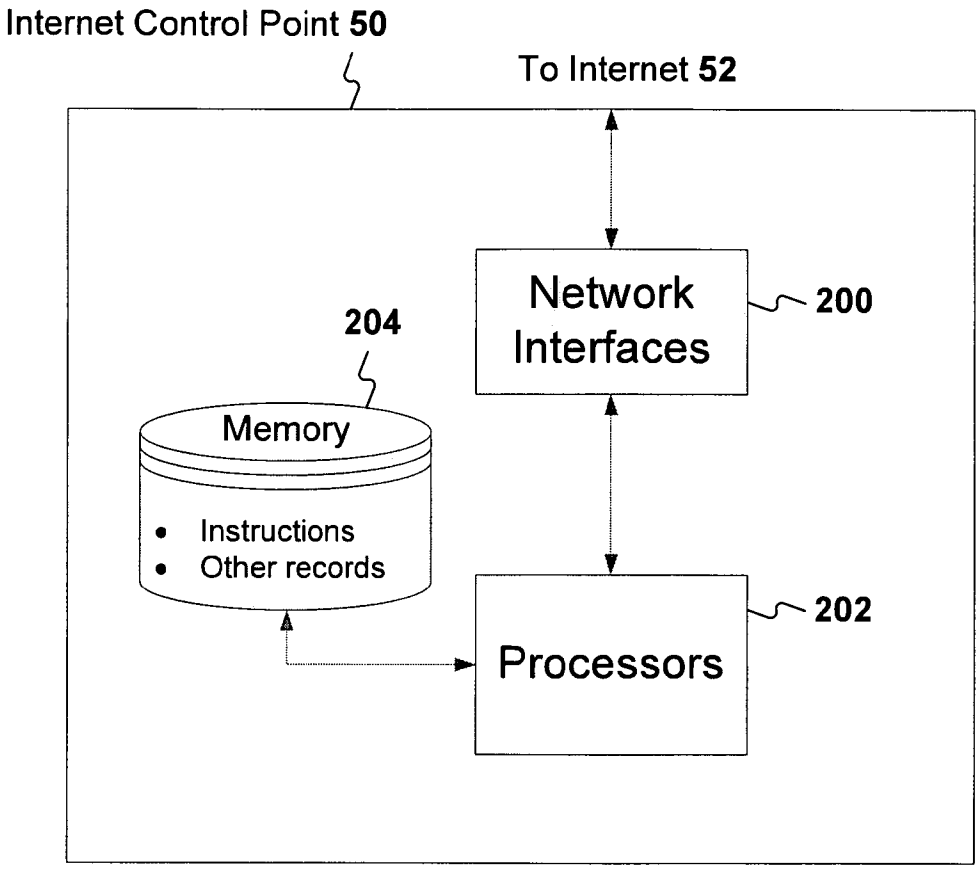
Internet Control Point 50
To Internet 52
Network Interfaces
200
204
Memory
Instructions
Other records
202
Processors

Figure 3

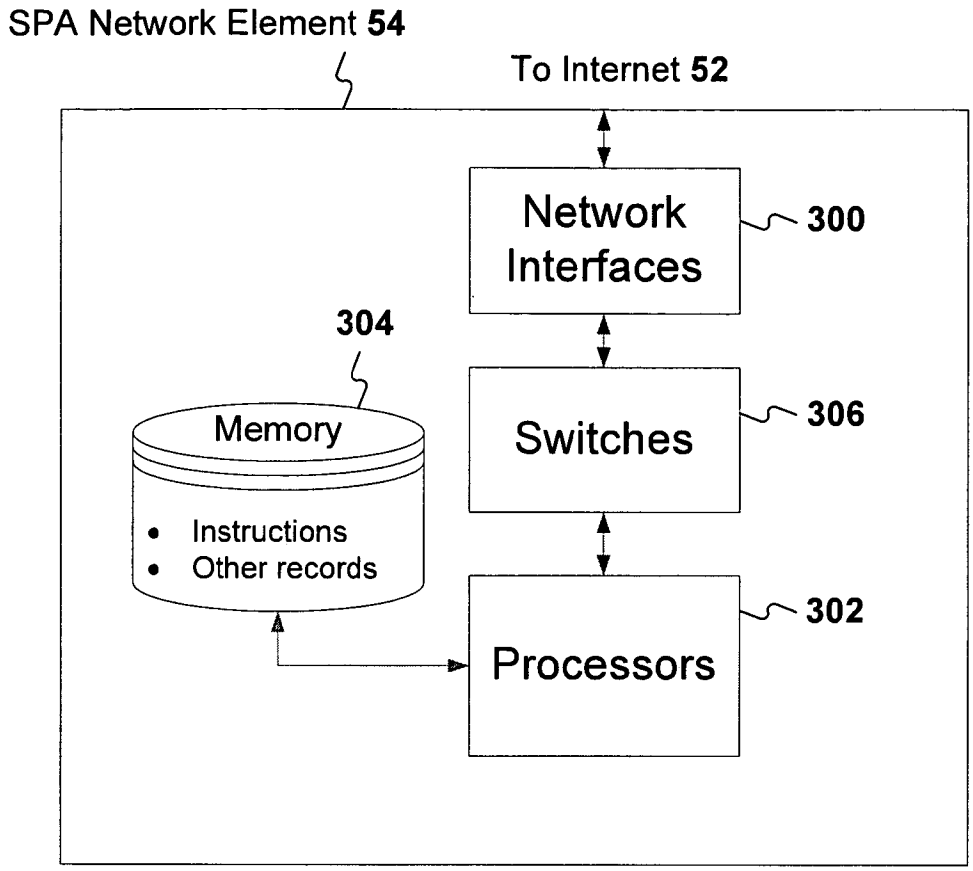
SPA Network Element 54
To Internet 52
Network Interfaces
300
304
Memory
Instructions
Other records
Switches
306
Processors
302

Figure 4

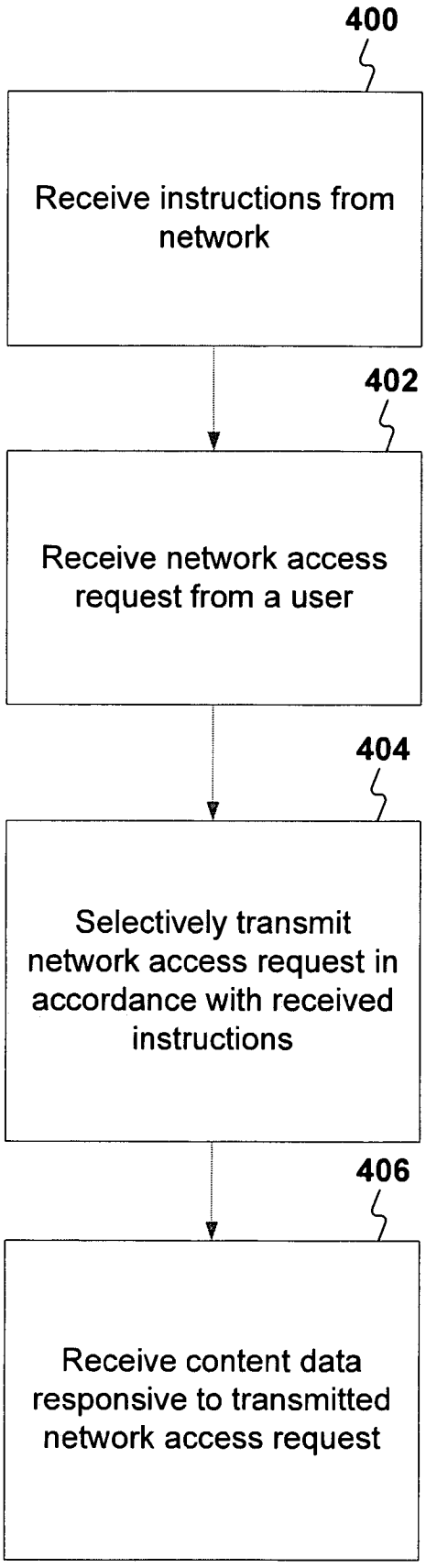
400
Receive instructions from network
402
Receive network access request from a user
404
Selectively transmit network access request in accordance with received instructions
406
Receive content data responsive to transmitted network access request

Figure 5

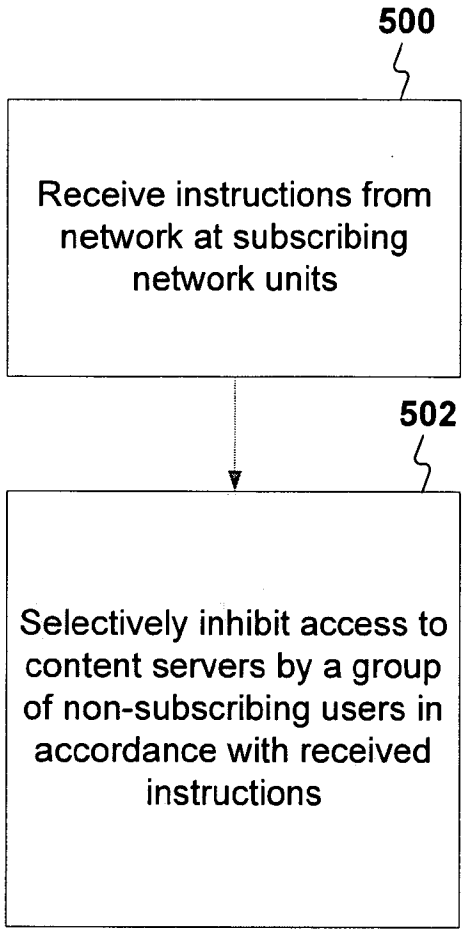
500
Receive instructions from network at subscribing network units
502
Selectively inhibit access to content servers by a group of non-subscribing users in accordance with received instructions

Figure 6

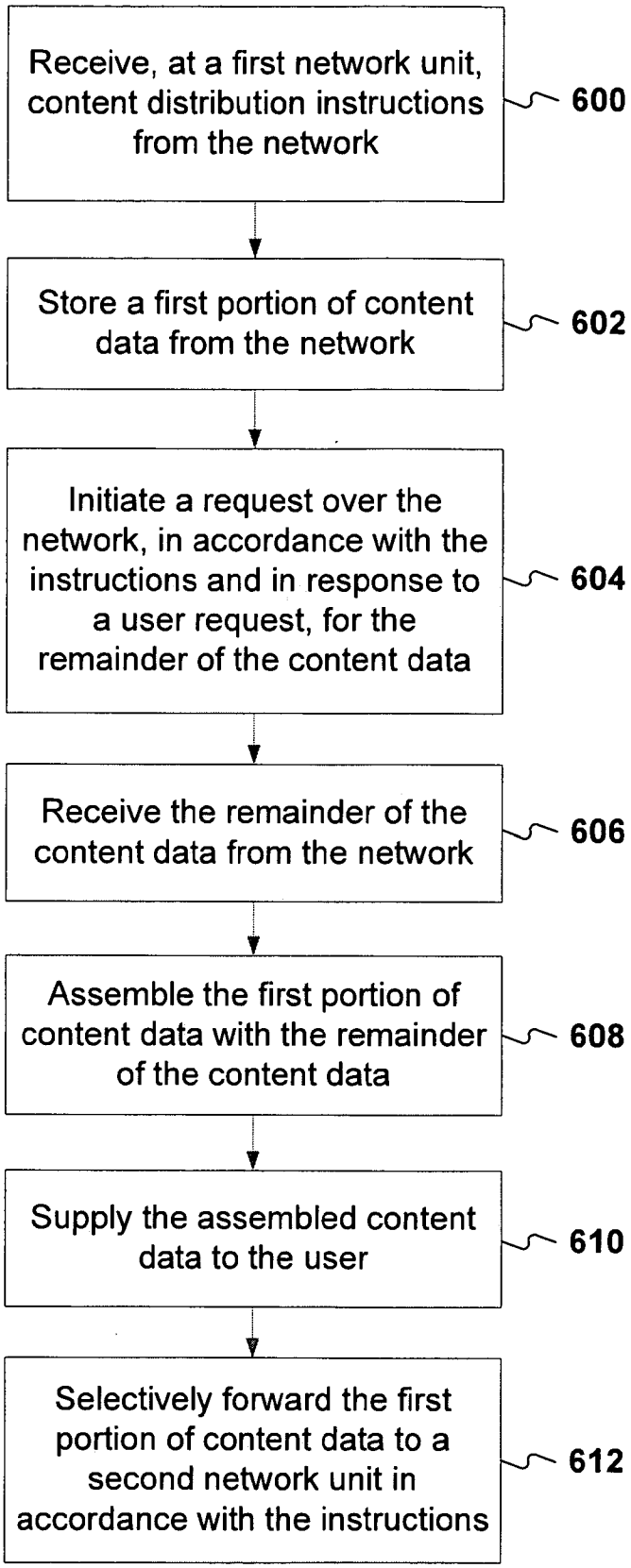
Receive, at a first network unit, content distribution instructions from the network
600
Store a first portion of content data from the network
602
Initiate a request over the network, in accordance with the instructions and in response to a user request, for the remainder of the content data
604
Receive the remainder of the content data from the network
606
Assemble the first portion of content data with the remainder of the content data
608
Supply the assembled content data to the user
610
Selectively forward the first portion of content data to a second network unit in accordance with the instructions
612

Figure 7

OIPE JC174
FEB 1 5 2005
PATENT & TRADEMARK OFFICE

DECLARATION AND POWER OF ATTORNEY

As a below named inventor, I hereby declare that: my residence, post office address, and citizenship are as stated below next to my name; I believe I am an original, first, and joint inventor of the subject matter which is claimed and for which a patent is sought on the invention entitled: SYSTEM FOR REGULATING ACCESS TO AND DISTRIBUTING CONTENT IN A NETWORK, the specification of which ☐ is attached and/or ☒ was filed on November 16, 2004, as United States Application No. 10/989,023 and Confirmation No. 1874.

I hereby state that I have reviewed and understand the contents of the above-identified specification, including the claims, as amended by any amendment referred to above. I acknowledge the duty to disclose information which is material to patentability as defined in 37 CFR § 1.56.

I hereby claim foreign priority benefits under 35 U.S.C. § 119(a)-(d) or § 365(b) of any foreign application(s) for patent or inventor's certificate or § 365(a) of any PCT international application(s) designating at least one country other than the United States, listed below and have also identified below, any foreign application(s) for patent or inventor's certificate, or any PCT International application(s) having a filing date before that of the application(s) of which priority is claimed:

Country	Application Number	Date of Filing	Priority Claimed Under 35 U.S.C. 119
			☐ YES ☐ NO
			☐ YES ☐ NO

I hereby claim the benefit under 35 U.S.C. § 119(e) of any United States provisional application(s) listed below:

Application Number	Date of Filing
60/523,057	November 18, 2003
60/538,370	January 22, 2004
60/563,064	April 16, 2004

I hereby claim the benefit under 35 U.S.C. § 120 of any United States application(s) or § 365(c) of any PCT International application(s) designating the United States, listed below and, insofar as the subject matter of each of the claims of this application is not disclosed in the prior United States or PCT International application(s) in the manner provided by the first paragraph of 35 U.S.C. § 112, I acknowledge the duty to disclose information which is material to patentability as defined in 37 CFR § 1.56 which became available between the filing date of the prior application(s) and the national or PCT International filing date of this application:

Application Number	Date of Filing	Status (Patented, Pending, Abandoned)

I hereby appoint the following attorney and/or agent(s) to prosecute this application and transact all business in the Patent and Trademark Office connected therewith. **FINNEGAN, HENDERSON, FARABOW, GARRETT & DUNNER, L.L.P., CUSTOMER NUMBER 22,852.**

I hereby declare that all statements made herein of my own knowledge are true and that all statements made on information and belief are believed to be true; and further that these statements were made with the knowledge that willful false statements and the like so made are punishable by fine or imprisonment, or both, under section 1001 of Title 18 of the United States Code, and that such willful false statements may jeopardize the validity of the application or any patent issuing thereon.

Full Name of First Inventor Robert M. BURKE, II	Inventor's Signature Robert M. Burke, II	Date 1-22-05
Residence 21103 Old Well Road, Los Gatos, CA 95033		Citizenship USA
Post Office Address 21103 Old Well Road, Los Gatos, CA 95033		

Full Name of Second Inventor David Z. CARMAN	Inventor's Signature David Z. Carman	Date 1-22-05
Residence 350 East Mission Street, #126, San Jose, CA 95112		Citizenship USA
Post Office Address 350 East Mission Street, #126, San Jose, CA 95112		

Full Name of Third Inventor	Inventor's Signature	Date
Residence		Citizenship
Post Office Address		

Full Name of Fourth Inventor	Inventor's Signature	Date
Residence		Citizenship
Post Office Address		

Full Name of Fifth Inventor	Inventor's Signature	Date
Residence		Citizenship
Post Office Address		

Full Name of Sixth Inventor	Inventor's Signature	Date
Residence		Citizenship
Post Office Address		

Full Name of Seventh Inventor	Inventor's Signature	Date
Residence		Citizenship
Post Office Address		

Full Name of Eighth Inventor	Inventor's Signature	Date
Residence		Citizenship
Post Office Address		

PATENT APPLICATION FEE DETERMINATION RECORD

Substitute for Form PTO-875

Application or Docket Number: 14/338,240

APPLICATION AS FILED - PART I

FOR	(Column 1) NUMBER FILED	(Column 2) NUMBER EXTRA	SMALL ENTITY RATE($)	SMALL ENTITY FEE($)	OR	OTHER THAN SMALL ENTITY RATE($)	OTHER THAN SMALL ENTITY FEE($)
BASIC FEE (37 CFR 1.16(a), (b), or (c))	N/A	N/A	N/A	70		N/A	
SEARCH FEE (37 CFR 1.16(k), (i), or (m))	N/A	N/A	N/A	300		N/A	
EXAMINATION FEE (37 CFR 1.16(o), (p), or (q))	N/A	N/A	N/A	360		N/A	
TOTAL CLAIMS (37 CFR 1.16(i))	44 minus 20 =	* 24	x 40 =	960	OR		
INDEPENDENT CLAIMS (37 CFR 1.16(h))	1 minus 3 =	*	x 210 =	0.00			
APPLICATION SIZE FEE (37 CFR 1.16(s))	If the specification and drawings exceed 100 sheets of paper, the application size fee due is $310 ($155 for small entity) for each additional 50 sheets or fraction thereof. See 35 U.S.C. 41(a)(1)(G) and 37 CFR 1.16(s).			0.00			
MULTIPLE DEPENDENT CLAIM PRESENT (37 CFR 1.16(j))				0.00			
* If the difference in column 1 is less than zero, enter "0" in column 2.			TOTAL	1690		TOTAL	

APPLICATION AS AMENDED - PART II

		(Column 1) CLAIMS REMAINING AFTER AMENDMENT		(Column 2) HIGHEST NUMBER PREVIOUSLY PAID FOR	(Column 3) PRESENT EXTRA	SMALL ENTITY RATE($)	SMALL ENTITY ADDITIONAL FEE($)	OR	OTHER THAN SMALL ENTITY RATE($)	OTHER THAN SMALL ENTITY ADDITIONAL FEE($)
AMENDMENT A	Total (37 CFR 1.16(i))	*	Minus	**	=	x =		OR	x =	
	Independent (37 CFR 1.16(h))	*	Minus	***	=	x =		OR	x =	
	Application Size Fee (37 CFR 1.16(s))									
	FIRST PRESENTATION OF MULTIPLE DEPENDENT CLAIM (37 CFR 1.16(j))							OR		
						TOTAL ADD'L FEE		OR	TOTAL ADD'L FEE	

		(Column 1) CLAIMS REMAINING AFTER AMENDMENT		(Column 2) HIGHEST NUMBER PREVIOUSLY PAID FOR	(Column 3) PRESENT EXTRA	RATE($)	ADDITIONAL FEE($)		RATE($)	ADDITIONAL FEE($)
AMENDMENT B	Total (37 CFR 1.16(i))	*	Minus	**	=	x =		OR	x =	
	Independent (37 CFR 1.16(h))	*	Minus	***	=	x =		OR	x =	
	Application Size Fee (37 CFR 1.16(s))									
	FIRST PRESENTATION OF MULTIPLE DEPENDENT CLAIM (37 CFR 1.16(j))							OR		
						TOTAL ADD'L FEE		OR	TOTAL ADD'L FEE	

* If the entry in column 1 is less than the entry in column 2, write "0" in column 3.

** If the "Highest Number Previously Paid For" IN THIS SPACE is less than 20, enter "20".

*** If the "Highest Number Previously Paid For" IN THIS SPACE is less than 3, enter "3".

The "Highest Number Previously Paid For" (Total or Independent) is the highest found in the appropriate box in column 1.

UNITED STATES PATENT AND TRADEMARK OFFICE

UNITED STATES DEPARTMENT OF COMMERCE
United States Patent and Trademark Office
Address: COMMISSIONER FOR PATENTS
P.O. Box 1450
Alexandria, Virginia 22313-1450
www.uspto.gov

APPLICATION NUMBER	FILING or 371(c) DATE	GRP ART UNIT	FIL FEE REC'D	ATTY.DOCKET.NO	TOT CLAIMS	IND CLAIMS
14/338,240	07/22/2014	2465	0.00	123205-198706	44	1

CONFIRMATION NO. 7564

60172
SCHWABE, WILLIAMSON & WYATT, P.C.
1420 FIFTH AVENUE, SUITE 3400
SEATTLE, WA 98101-4010

FILING RECEIPT

Date Mailed: 08/04/2014

Receipt is acknowledged of this non-provisional patent application. The application will be taken up for examination in due course. Applicant will be notified as to the results of the examination. Any correspondence concerning the application must include the following identification information: the U.S. APPLICATION NUMBER, FILING DATE, NAME OF APPLICANT, and TITLE OF INVENTION. Fees transmitted by check or draft are subject to collection. Please verify the accuracy of the data presented on this receipt. **If an error is noted on this Filing Receipt, please submit a written request for a Filing Receipt Correction. Please provide a copy of this Filing Receipt with the changes noted thereon. If you received a "Notice to File Missing Parts" for this application, please submit any corrections to this Filing Receipt with your reply to the Notice. When the USPTO processes the reply to the Notice, the USPTO will generate another Filing Receipt incorporating the requested corrections**

Inventor(s)

Robert M. Burke II, Los Gatos, CA;
David Z. Carman, Tulsa, OK;

Applicant(s)

Robert M. Burke II, Los Gatos, CA;
David Z. Carman, Tulsa, OK;

Power of Attorney: The patent practitioners associated with Customer Number 22852

Domestic Priority data as claimed by applicant

This application is a CON of 13/369,174 02/08/2012 PAT 8799468
which is a CON of 10/989,023 11/16/2004 PAT 8122128
which claims benefit of 60/563,064 04/16/2004
and claims benefit of 60/538,370 01/22/2004
and claims benefit of 60/523,057 11/18/2003

Foreign Applications for which priority is claimed (You may be eligible to benefit from the **Patent Prosecution Highway** program at the USPTO. Please see http://www.uspto.gov for more information.) - None.
Foreign application information must be provided in an Application Data Sheet in order to constitute a claim to foreign priority. See 37 CFR 1.55 and 1.76.

If Required, Foreign Filing License Granted: 08/04/2014
The country code and number of your priority application, to be used for filing abroad under the Paris Convention, is **US 14/338,240**
Projected Publication Date: To Be Determined - pending completion of Missing Parts
Non-Publication Request: No

Early Publication Request: No
**** SMALL ENTITY ****
Title

SYSTEM FOR REGULATING ACCESS TO AND DISTRIBUTING CONTENT IN A NETWORK

Preliminary Class

370

Statement under 37 CFR 1.55 or 1.78 for AIA (First Inventor to File) Transition Applications: No

PROTECTING YOUR INVENTION OUTSIDE THE UNITED STATES

Since the rights granted by a U.S. patent extend only throughout the territory of the United States and have no effect in a foreign country, an inventor who wishes patent protection in another country must apply for a patent in a specific country or in regional patent offices. Applicants may wish to consider the filing of an international application under the Patent Cooperation Treaty (PCT). An international (PCT) application generally has the same effect as a regular national patent application in each PCT-member country. The PCT process **simplifies** the filing of patent applications on the same invention in member countries, but **does not result** in a grant of "an international patent" and does not eliminate the need of applicants to file additional documents and fees in countries where patent protection is desired.

Almost every country has its own patent law, and a person desiring a patent in a particular country must make an application for patent in that country in accordance with its particular laws. Since the laws of many countries differ in various respects from the patent law of the United States, applicants are advised to seek guidance from specific foreign countries to ensure that patent rights are not lost prematurely.

Applicants also are advised that in the case of inventions made in the United States, the Director of the USPTO must issue a license before applicants can apply for a patent in a foreign country. The filing of a U.S. patent application serves as a request for a foreign filing license. The application's filing receipt contains further information and guidance as to the status of applicant's license for foreign filing.

Applicants may wish to consult the USPTO booklet, "General Information Concerning Patents" (specifically, the section entitled "Treaties and Foreign Patents") for more information on timeframes and deadlines for filing foreign patent applications. The guide is available either by contacting the USPTO Contact Center at 800-786-9199, or it can be viewed on the USPTO website at http://www.uspto.gov/web/offices/pac/doc/general/index.html.

For information on preventing theft of your intellectual property (patents, trademarks and copyrights), you may wish to consult the U.S. Government website, http://www.stopfakes.gov. Part of a Department of Commerce initiative, this website includes self-help "toolkits" giving innovators guidance on how to protect intellectual property in specific countries such as China, Korea and Mexico. For questions regarding patent enforcement issues, applicants may call the U.S. Government hotline at 1-866-999-HALT (1-866-999-4258).

LICENSE FOR FOREIGN FILING UNDER

Title 35, United States Code, Section 184

Title 37, Code of Federal Regulations, 5.11 & 5.15

GRANTED

The applicant has been granted a license under 35 U.S.C. 184, if the phrase "IF REQUIRED, FOREIGN FILING LICENSE GRANTED" followed by a date appears on this form. Such licenses are issued in all applications where the conditions for issuance of a license have been met, regardless of whether or not a license may be required as set forth in 37 CFR 5.15. The scope and limitations of this license are set forth in 37 CFR 5.15(a) unless an earlier license has been issued under 37 CFR 5.15(b). The license is subject to revocation upon written notification. The date indicated is the effective date of the license, unless an earlier license of similar scope has been granted under 37 CFR 5.13 or 5.14.

This license is to be retained by the licensee and may be used at any time on or after the effective date thereof unless it is revoked. This license is automatically transferred to any related applications(s) filed under 37 CFR 1.53(d). This license is not retroactive.

The grant of a license does not in any way lessen the responsibility of a licensee for the security of the subject matter as imposed by any Government contract or the provisions of existing laws relating to espionage and the national security or the export of technical data. Licensees should apprise themselves of current regulations especially with respect to certain countries, of other agencies, particularly the Office of Defense Trade Controls, Department of State (with respect to Arms, Munitions and Implements of War (22 CFR 121-128)); the Bureau of Industry and Security, Department of Commerce (15 CFR parts 730-774); the Office of Foreign AssetsControl, Department of Treasury (31 CFR Parts 500+) and the Department of Energy.

NOT GRANTED

No license under 35 U.S.C. 184 has been granted at this time, if the phrase "IF REQUIRED, FOREIGN FILING LICENSE GRANTED" DOES NOT appear on this form. Applicant may still petition for a license under 37 CFR 5.12, if a license is desired before the expiration of 6 months from the filing date of the application. If 6 months has lapsed from the filing date of this application and the licensee has not received any indication of a secrecy order under 35 U.S.C. 181, the licensee may foreign file the application pursuant to 37 CFR 5.15(b).

SelectUSA

The United States represents the largest, most dynamic marketplace in the world and is an unparalleled location for business investment, innovation, and commercialization of new technologies. The U.S. offers tremendous resources and advantages for those who invest and manufacture goods here. Through SelectUSA, our nation works to promote and facilitate business investment. SelectUSA provides information assistance to the international investor community; serves as an ombudsman for existing and potential investors; advocates on behalf of U.S. cities, states, and regions competing for global investment; and counsels U.S. economic development organizations on investment attraction best practices. To learn more about why the United States is the best country in the world to develop technology, manufacture products, deliver services, and grow your business, visit http://www.SelectUSA.gov or call +1-202-482-6800.

UNITED STATES PATENT AND TRADEMARK OFFICE

UNITED STATES DEPARTMENT OF COMMERCE
United States Patent and Trademark Office
Address: COMMISSIONER FOR PATENTS
P.O. Box 1450
Alexandria, Virginia 22313-1450
www.uspto.gov

APPLICATION NUMBER	FILING OR 371(C) DATE	FIRST NAMED APPLICANT	ATTY. DOCKET NO./TITLE
14/338,240	07/22/2014	Robert M. Burke II	123205-198706

CONFIRMATION NO. 7564

60172
SCHWABE, WILLIAMSON & WYATT, P.C.
1420 FIFTH AVENUE, SUITE 3400
SEATTLE, WA 98101-4010

FORMALITIES LETTER

OC000000069994836

Date Mailed: 08/04/2014

NOTICE TO FILE MISSING PARTS OF NONPROVISIONAL APPLICATION

FILED UNDER 37 CFR 1.53(b)

Filing Date Granted

Items Required To Avoid Abandonment:

An application number and filing date have been accorded to this application. The item(s) indicated below, however, are missing. Applicant is given **TWO MONTHS** from the date of this Notice within which to file all required items below to avoid abandonment. Extensions of time may be obtained by filing a petition accompanied by the extension fee under the provisions of 37 CFR 1.136(a).

- The statutory basic filing fee is missing.
- The application search fee must be submitted.
- The application examination fee must be submitted.
- Additional claim fees of $ **960** as a small entity, including any required multiple dependent claim fee, are required. Applicant must submit the additional claim fees or cancel the additional claims for which fees are due.
- Surcharge as set forth in 37 CFR 1.16(f) must be submitted.
  The surcharge is due for any one of:
  - late submission of the basic filing fee, search fee, or examination fee,
  - late submission of inventor's oath or declaration,
  - filing an application that does not contain at least one claim on filing, or
  - submission of an application filed by reference to a previously filed application.

SUMMARY OF FEES DUE:

The fee(s) required within **TWO MONTHS** from the date of this Notice to avoid abandonment is/are itemized below. Small entity discount is in effect. If applicant is qualified for micro entity status, an acceptable Certification of Micro Entity Status must be submitted to establish micro entity status. (See 37 CFR 1.29 and forms PTO/SB/15A and 15B.)

- $ **70** basic filing fee.
- $ **70** surcharge.
- $ **300** search fee.
- $ **360** examination fee.
- $ **960** for **24** total claims over 20.

- $(**0**) previous unapplied payment amount.
- $ **1760** TOTAL FEE BALANCE DUE.

Items Required To Avoid Processing Delays:

Applicant is notified that the above-identified application contains the deficiencies noted below. No period for reply is set forth in this notice for correction of these deficiencies. However, if a deficiency relates to the inventor's oath or declaration, the applicant must file an oath or declaration in compliance with 37 CFR 1.63, or a substitute statement in compliance with 37 CFR 1.64, executed by or with respect to each actual inventor no later than the expiration of the time period set in the "Notice of Allowability" to avoid abandonment. See 37 CFR 1.53(f).

A new inventor's oath or declaration that identifies this application (e.g., by Application Number and filing date) is required. The inventor's oath or declaration does not comply with 37 CFR 1.63 in that it:

- does not state that the above-identified application was made or authorized to be made by the person executing the oath or declaration.

  Robert M. Burke II
  David Z. Carman

Replies must be received in the USPTO within the set time period or must include a proper Certificate of Mailing or Transmission under 37 CFR 1.8 with a mailing or transmission date within the set time period. For more information and a suggested format, see Form PTO/SB/92 and MPEP 512.

Replies should be mailed to:

Mail Stop Missing Parts
Commissioner for Patents
P.O. Box 1450
Alexandria VA 22313-1450

Registered users of EFS-Web may alternatively submit their reply to this notice via EFS-Web, including a copy of this Notice and selecting the document description "Applicant response to Pre-Exam Formalities Notice". https://sportal.uspto.gov/authenticate/AuthenticateUserLocalEPF.html

For more information about EFS-Web please call the USPTO Electronic Business Center at **1-866-217-9197** or visit our website at http://www.uspto.gov/ebc.

If you are not using EFS-Web to submit your reply, you must include a copy of this notice.

/kung/

Office of Data Management, Application Assistance Unit (571) 272-4000, or (571) 272-4200, or 1-888-786-0101

IN THE UNITED STATES PATENT AND TRADEMARK OFFICE

In re Continuation Application for:	Examiner: TBD
Burke et al.	Art Unit: 2465
Application No.: 14/338,240	Conf. #: 7564
Filed: July 22, 2014	
For: SYSTEM FOR REGULATING ACCESS TO AND DISTRIBUTING CONTENT IN A NETWORK	

Mail Stop Amendment
Commissioner for Patents
PO Box 1450
Alexandria, VA 22313-1450

SUPPLEMENTAL PRELIMINARY AMENDMENT

Please enter this amendment before considering the captioned application.

Amendments to Claims begin on page **2** of this paper.

Remarks/Arguments begin on page **12** of this paper.

AMENDMENTS TO THE CLAIMS

This listing of claims will replace all prior versions, and listings, of claims in the application:

1. (Currently Amended) A system for regulating access to a service provider network, the system comprising:

a controller node coupled to the service provider network, the controller node comprising:

a first processor ~~for generating~~ to generate controller instructions, and

[[a]] first one or more network interfaces ~~for transmitting~~ to transmit the controller instructions over the service provider network to a plurality of network elements; and

the[[a]] plurality of ~~gateway units~~network elements, each of the plurality of network elements~~gateway units~~ comprising:

~~a user interface receiving user-entered network access requests;~~

[[a]] second one or more network interfaces coupled to the service provider network ~~and~~ to receive ~~receiving~~ the controller instructions from the controller node through the service provider network; and

at least a second processor coupled to the second one or more network interfaces, wherein the second processor is to selectively transmit~~ting at least some of the network access~~ content requests ~~over~~ to the service provider network in accordance with the controller instructions, and transfer~~ring~~ received content data responsive to the transmitted ~~network access~~ content requests ~~over~~ from the service provider network via the second one or more network interfaces.

2. (Currently Amended) The system of claim 1 wherein:

each of the ~~gateway units~~network elements further comprises a storage device ~~for storing~~ to store the controller instructions; and

each the network elements ~~gateway units further comprise~~ has an identifier that

DISH, Exh.1005, p.0105

uniquely ~~associating~~ identifies the network element~~gateway units with a user; and the storage device is operable to store user-specific information~~.

3 - 7 (Canceled)

8. (Currently Amended) The system of claim 1, wherein ~~the controller nodes comprise a first processor generating~~ the controller instructions include instructions to deny ~~user~~ access to a first group of network servers of the service provider network.

9. (Currently Amended) The system of claim 8, wherein ~~the gateway units~~ the controller instructions comprise ~~a second processor~~instructions to generate a notification to the~~a~~ controller node if a ~~network access~~content request designates a network server of the ~~first group of network servers~~ service provider network.

10. (Currently Amended) The system of claim 8, wherein the ~~gateway units~~controller instructions ~~comprise a second processor~~ are to further ~~configured to~~:

detect a ~~network access~~ content request that designates~~designating~~ a first network server ~~a first group of network servers~~ of the service provider network; and

re-direct the ~~access~~content request to a second ~~group of~~ network server[[s]] of the service provider network ~~in accordance with the controller instructions~~.

11. (Currently Amended) The system of claim 1, wherein:

~~the controller nodes comprise a first processor generating the controller instructions,~~ the controller instructions include~~including~~ a file identifier; and

~~the system comprises a plurality of gateway units associated with a user file system, the gateway units comprising a second processor~~ the controller instructions are to detect a file in a user file system in a network element that corresponds ~~corresponding~~ to the file identifier, and on detection, delete the file from a file system in the network element.

DISH, Exh.1005, p.0106

12. (Currently Amended) The system of claim 11, wherein each of the network elements ~~gateway units~~ is~~are~~ operable between an active state and an inactive state, and wherein the controller instructions are to notify the controller node if a network element enters the inactive state.

13 - 16. (Canceled)

17. (Currently Amended) The system of claim 1, wherein at least one the ~~gateway units~~network elements comprises:

a housing to house at least the second one or more network interfaces, and the second processor; and

a detector ~~for detecting~~to detect an attempt to open the housing;

wherein the controller instructions are to notify the controller node and prevent access to at least the storage device in response to a detection of an attempt to open the housing.

18 - 19. (Canceled)

20. (Currently Amended) The system of claim 1, wherein the controller instructions are to place a network element ~~the gateway units comprise a second processor that enters~~ in an ~~user-controlled~~ operational mode ~~after receiving~~ on receipt of permission from the controller node.

21. (Currently Amended) The system of claim 1, wherein the controller node further comprises a copyright registry ~~for tracking~~ to track copyright status of content data files distributed to the network element~~gateway units in the system~~.

22. (Canceled)

DISH, Exh.1005, p.0107

23. (Currently Amended) The system of claim 1, wherein the controller instructions include a pre-determined network site, and the controller instructions are to cause ~~the second processor causes the~~ a network element ~~gateway unit~~ to access [[a]] the predetermined network site ~~upon initiation of network browser software, in accordance with the controller instructions~~.

24 – 25. (Canceled)

26. (Currently Amended) The system of claim 1, wherein the controller instructions are to enable a network element~~the gateway units~~ to:

~~receive registration information from a user via the user interface; and~~

receive initial operating parameters from the controller node via the second one or more network interfaces.

27. (Canceled)

28. (Currently Amended) The system of claim 1, wherein:

the controller instructions are to enable each of the network elements ~~gateway units~~ to customize and transmit advertising received via the ~~user~~ second one or more network interfaces to a user display via a gateway unit, the advertising being customized in accordance with information received via ~~at least one of~~ the second network interface ~~and the user interface~~.

29. (Currently Amended) The system of claim 1, wherein the controller instructions are to enable each of the network elements ~~gateway units~~ to:

transmit pay-per-view advertising received from the service provider network via the ~~user~~ second one or more network interfaces to a display unit via a gateway unit for selective display by a user; and

~~generate payment credits for the user~~ notify the controller node upon display of the advertising ~~by the user~~ to enable payment credits be generated.

DISH, Exh.1005, p.0108

30. (Canceled)

31. (Currently Amended) The system of claim 1, wherein the controller instructions are to further enable ~~the gateway units~~a network element to receive additional software via the second one or more network interfaces for execution on the second processor, the software enabling at least one of a fee-based network service, network video calling, or~~and~~ network gaming.

32. (Currently Amended) The system of claim 1, wherein the controller instructions are to further enable a network element to ~~the second processor detects~~ detect a denial-of-service attack against the service provider network.

33. (Canceled)

34. (Currently Amended) The system of claim 1, wherein the controller instructions are further to enable a network element ~~the gateway unit~~s to selectively transmit to law enforcement terminals information describing at least one of incoming data and outgoing data [[to]] of the network element~~gateway units~~.

35- 38 (Canceled)

39. (Currently Amended) The system of claim 1, wherein the controller instructions are further to enable a network element~~the gateway units~~ to:

detect at least one of audio and video traffic flowing through the second network interface; and

selectively reduce the quality of service of the at least one of audio and video traffic ~~in accordance with the controller instructions~~, wherein reduction of quality of service comprises at least one of:

reducing a duty cycle, inserting TCP/IP messages in the at least one of audio and video traffic, inserting Nak/Ack pairs in the at least one of audio and video traffic, and

DISH, Exh.1005, p.0109

inserting X-On/X-Off pairs in the at least one of audio and video traffic.

40. (Canceled)

41. (Currently Amended) The system of claim 1, wherein each of the ~~gateway units~~ network elements further comprise at least one data storage unit[[s]] ~~partitioned into~~having a network portion ~~and a user portion~~, and at least one of a first group of the network elements ~~gateway units~~ selectively shares data stored in the network partition with at least one of a second group of the network elements~~gateway units~~, via the second network interface, in accordance with the controller instructions provided to the first and second groups of the network elements.

42. (Currently Amended) The system of claim 1, wherein the controller instructions are further to enable ~~second processor in~~ at least a first one of the network elements ~~gateway units~~ to selectively forward[[s]] content data received from at least a second one of the network elements~~gateway units~~ to at least a third one of the network elements~~gateway units in accordance with the controller instructions~~.

43. (Currently Amended) The system of claim 42 wherein the ~~second processor in~~ controller instructions are further to enable at least ~~a first~~ the third one of the network elements ~~gateway units~~ to:

receive[[s]] portions of a content data file from ~~a group of~~other network elements~~gateway units in accordance with the controller instructions~~; and

assemble[[s a]]the content data file based on the received portions for ~~transmission to~~ playing for ~~the~~ a user ~~via the user interface~~associated with a gateway unit.

44. (Canceled)

45-115. (Canceled)

DISH, Exh.1005, p.0110

116. (New) A method for regulating access to a service provider network, the method comprising:

generating, by a controller node coupled to the service provider network, controller instructions;

transmitting the controller instructions, by the controller node, to a plurality of network elements of the service provider network;

receiving, by the network elements, content requests for the service provider network;

selectively transmitting, by the plurality of network elements, the content requests to the service provider network in accordance with the controller instructions; and

transferring, by the network elements,, received content data responsive to the transmitted content requests from the service provider network.

117. (New) The method of claim 116 further comprising storing the controller instructions, by the network element, in storage devices of the network elements, wherein each of the network elements has an identifier that uniquely identifies the network element.

118. (New The method of claim 116, further comprising the network elements denying access to a first group of network servers of the service provider network, in accordance with the controller instructions.

119. (New) The method of claim 118, further comprising the network elements notifying the controller node if a content request designates a network server of the service provider network.

120. (New) The method of claim 118, further comprising the network elements detecting a content request that designates a first network server of the service provider network; and re-directing the content request to a second network server of the service provider network.

DISH, Exh.1005, p.0111

121. (New) The method of claim 116, wherein the controller instructions include a file identifier; and the method further comprises a network element detecting a file in a user file system associated with a network element or a gateway unit that corresponds to the file identifier, and on detection, deleting the file from the user file system.

122. (New) The method of claim 121, wherein each of the network elements is operable between an active state and an inactive state, and wherein the method further comprises a network element notifying the controller node if the network element enters the inactive state.

123. (New) The method of claim 116, further comprising a network element entering a user-controlled operational mode on receipt of permission from the controller node.

124. (New) The method of claim 116, further comprising the controller node tracking copyright status of content data files distributed to the network elements.

125. (New) The method of claim 116, wherein the controller instructions include a pre-determined network site, and the method further comprises a network element accessing the predetermined network site, in accordance with the controller instructions.

126. (New) The method of claim 116, further comprising a network element receiving initial operating parameters from the controller node.

127. (New) The method of claim 116, further comprising a network element customizing and transmitting advertising received to a user display associated with a gateway unit.

DISH, Exh.1005, p.0112

128. (New) The method of claim 116, further comprising a network element transmitting pay-per-view advertising received from the service provider network to a display unit associated with a gateway unit for selective display; and notifying the controller node upon displaying of the advertising to enable payment credits be generated.

129. (New) The method of claim 116, further comprising a network element receiving additional software for execution, the software enabling at least one of a fee-based network service, network video calling, and network gaming.

130. (New) The method of claim 116, further comprising a network element detecting a denial-of-service attack against the service provider network.

131. (New) The method of claim 116, further comprising a network element selectively transmitting to law enforcement terminals information describing at least one of incoming data and outgoing data of the network element.

132. (New) The method of claim 116, further comprising a network element detecting at least one of audio and video traffic; and selectively reducing the quality of service of the at least one of audio and video traffic in accordance with the controller instructions; wherein reduction of quality of service comprises at least one of:

reducing a duty cycle, inserting TCP/IP messages in the at least one of audio and video traffic, inserting Nak/Ack pairs in the at least one of audio and video traffic, and inserting X-On/X-Off pairs in the at least one of audio and video traffic.

133. (New) The method of claim 116, wherein each of the network elements further comprises a data storage unit having a network portion, and the method further comprises at least one of a first group of the network elements selectively sharing data stored in the network partition with at least one of a second group of the network elements, in accordance with the controller instructions provided to the first and second groups of the network elements.

DISH, Exh.1005, p.0113

134. (New) The method of claim 116, further comprising at least a first one of the network elements selectively forwarding content data received from at least a second one of the network elements to at least a third one of the network elements in accordance with the controller instructions.

135. (New) The method of claim 134 further comprising the third one of the network elements receiving portions of a content data file from a group of other network elements in accordance with the controller instructions; and assembling the content data file based on the received portions for transmission.

136. (New) The system of Claim 1 wherein the controller node is to control a plurality of subscribers' ability to access services, content and operation of the services via control of data flow through the plurality of network elements.

137 (New) The system of Claim 1 wherein the controller node is to deliver active and real time executed network management, distribute new database entries and software changes to a plurality of communication gateways via the plurality of network elements.

138 (New) The system of Claim 1 wherein the controller instructions include controller instructions to be distributed to a plurality of communication gateways via the plurality of network elements.

139 (New) The system of Claim 1 wherein the network elements are members of a subscriber management system used to control access to the service provider network, to authenticate subscribers or devices before allowing access into the service provider network.

DISH, Exh.1005, p.0114

140 (New) The system of claim 1, wherein at least one of the network elements is a selected one of a DSLAM, a cable modem, a wireless modem , a multiplexing or channel service delivery system, or a satellite.

141 (New) The System of Claim 1 wherein network elements are to perform packet inspection to determine: file types , URL/IP addresses of content sources or destinations, or data patterns, in accordance with the controller instructions.

142 (New) The system of Claim 1 wherein the network elements are to further send a copy of data originated from or sent to content servers or gateways being wiretapped to law enforcement agencies, as directed by an active intervention system or controller.

DISH, Exh.1005, p.0115

REMARKS

Claims 1-44 were pending. Claims 45-115 were previously canceled. In this paper, claims 3-7, 13-16, 18-19, 22, 24, 25, 27, 30, 33, 35-38, 40 and 44 have been canceled. Claims 1-2, 8-12, 17, 20, 21, 23, 26, 28, 29, 31, 32, 34, 39-43 have been amended. Claims 116 – 135 have been added, which are method claims of selected ones of the system claims. Thus, no new matter has been introduced. Accordingly, claims 1-2, 8-12, 17, 20, 21, 23, 26, 28, 29, 31, 32, 34, 39, 41-43 and 116 – 135 are now pending. Examination is respectfully requested.

If the Examiner has any questions concerning the present paper, the Examiner is kindly requested to contact the undersigned at the direct number listed below.

For any shortage or excess of fees in connection with filing this paper, the Commissioner is authorized to charge or credit Deposit Account No. 500393.

Respectfully submitted,
Schwabe, Williamson & Wyatt, P.C.

Dated: October 22, 2014

/Al AuYeung/
Al AuYeung
Registration # 35,432
Direct: (206) 381-8819

DISH, Exh.1005, p.0116

Doc Code: Oath

Document Description: Oath or declaration filed

PTO/AIA/08 (05-12)
Approved for use through 01/31/2014. OMB 0651-0032
U.S. Patent and Trademark Office; U.S. DEPARTMENT OF COMMERCE

Under the Paperwork Reduction Act of 1995, no persons are required to respond to a collection of information unless it contains a valid OMB control number.

DECLARATION FOR UTILITY OR DESIGN PATENT APPLICATION (37 CFR 1.63)

☐ Declaration Submitted With Initial Filing OR ■ Declaration Submitted After Initial Filing (surcharge (37 CFR 1.16(f)) required)

Attorney Docket Number	123205-198706
First Named Inventor	Robert M. Burke
COMPLETE IF KNOWN	
Application Number	14/338,240
Filing Date	July 22, 2014
Art Unit	Not Yet Assigned
Examiner Name	Not Yet Assigned

SYSTEM FOR REGULATING ACCESS TO AND DISTRIBUTING CONTENT IN A NETWORK

(Title of the Invention)

As a below named inventor, I hereby declare that:

This declaration is directed to:

☐ The attached application,

OR

■ United States Application Number or PCT International application number 14/338,240 filed on July 22, 2014.

The above-identified application was made or authorized to be made by me.

I believe I am the original inventor or an original joint inventor of a claimed invention in the application.

I hereby acknowledge that any willful false statement made in this declaration is punishable under 18 U.S.C. 1001 by fine or imprisonment of not more than five (5) years, or both.

Authorization To Permit Access To Application by Participating Office

☑ If checked, the undersigned hereby grants the USPTO authority to provide the European Patent Office (EPO), the Japan Patent Office (JPO), the Korean Intellectual Property Office (KIPO), the World Intellectual Property Office (WIPO), and any other intellectual property offices in which a foreign application claiming priority to the above-identified patent application is filed access to the above-identified patent application. See 37 CFR 1.14(c) and (h). This box should not be checked if the applicant does not wish the EPO, JPO, KIPO, WIPO, or other intellectual property office in which a foreign application claiming priority to the above-identified patent application is filed to have access to the above-identified patent application.

In accordance with 37 CFR 1.14(h)(3), access will be provided to a copy of the above-identified patent application with respect to: 1) the above-identified patent application-as-filed; 2) any foreign application to which the above-identified patent application claims priority under 35 U.S.C. 119(a)-(d) if a copy of the foreign application that satisfies the certified copy requirement of 37 CFR 1.55 has been filed in the above-identified patent application; and 3) any U.S. application-as-filed from which benefit is sought in the above-identified patent application.

In accordance with 37 CFR 1.14(c), access may be provided to information concerning the date of filing the Authorization to Permit Access to Application by Participating Offices.

This collection of information is required by 35 U.S.C. 115 and 37 CFR 1.63. The information is required to obtain or retain a benefit by the public which is to file (and by the USPTO to process) an application. Confidentiality is governed by 35 U.S.C. 122 and 37 CFR 1.11 and 1.14. This collection is estimated to take 21 minutes to complete, including gathering, preparing, and submitting the completed application form to the USPTO. Time will vary depending upon the individual case. Any comments on the amount of time you require to complete this form and/or suggestions for reducing this burden, should be sent to the Chief Information Officer, U.S. Patent and Trademark Office, U.S. Department of Commerce, P.O. Box 1450, Alexandria, VA 22313-1450. DO NOT SEND FEES OR COMPLETED FORMS TO THIS ADDRESS. **SEND TO: Commissioner for Patents, P.O. Box 1450, Alexandria, VA 22313-1450.**

If you need assistance in completing the form, call 1-800-PTO-9199 and select option 2.

PTO/AIA/08 (08-12)
Approved for use through 01/31/2014. OMB 0651-0032
U.S. Patent and Trademark Office: U.S. DEPARTMENT OF COMMERCE
Under the Paperwork Reduction Act of 1995, no persons are required to respond to a collection of information unless it contains a valid OMB control number.

DECLARATION — Utility or Design Patent Application

Direct all correspondence to: ■ The address associated with Customer Number:	60172	OR ☐ Correspondence address below

Name		
Address		
City	State	Zip
Country	Telephone	Email

WARNING:

Petitioner/applicant is cautioned to avoid submitting personal information in documents filed in a patent application that may contribute to identity theft. Personal information such as social security numbers, bank account numbers, or credit card numbers (other than a check or credit card authorization form PTO-2038 submitted for payment purposes) is never required by the USPTO to support a petition or an application. If this type of personal information is included in documents submitted to the USPTO, petitioners/applicants should consider redacting such personal information from the documents before submitting them to the USPTO. Petitioner/applicant is advised that the record of a patent application is available to the public after publication of the application (unless a non-publication request in compliance with 37 CFR 1.213(a) is made in the application) or issuance of a patent. Furthermore, the record from an abandoned application may also be available to the public if the application is referenced in a published application or an issued patent (see 37 CFR 1.14). Checks and credit card authorization forms PTO-2038 submitted for payment purposes are not retained in the application file and therefore are not publicly available. Petitioner/applicant is advised that documents which form the record of a patent application (such as the PTO/SB/01) are placed into the Privacy Act system of records DEPARTMENT OF COMMERCE, COMMERCE-PAT-7, System name: *Patent Application Files*. Documents not retained in an application file (such as the PTO-2038) are placed into the Privacy Act system of COMMERCE/PAT-TM-10, System name: *Deposit Accounts and Electronic Funds Transfer Profiles*.

LEGAL NAME OF SOLE OR FIRST INVENTOR:

(*E.g.*, Given Name (first and middle (if any)) and Family Name or Surname)

Zac Carman

Inventor's Signature	Date (Optional)
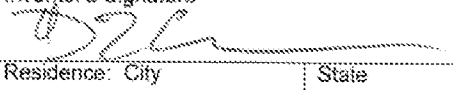	

Residence: City	State	Country
Tulsa	OK	US

Mailing Address

1131 East 20th Street

City	State	Zip	Country
Tulsa	OK	74120	US

☐ Additional inventors are being named on this _____ supplemental sheet(s) PTO/AIA/10 attached hereto

DECLARATION — Utility or Design Patent Application

Direct all correspondence to: ■	The address associated with Customer Number:	60172	OR ☐	Correspondence address below

Name		
Address		
City	State	Zip
Country	Telephone	Email

WARNING:

Petitioner/applicant is cautioned to avoid submitting personal information in documents filed in a patent application that may contribute to identity theft. Personal information such as social security numbers, bank account numbers, or credit card numbers (other than a check or credit card authorization form PTO-2038 submitted for payment purposes) is never required by the USPTO to support a petition or an application. If this type of personal information is included in documents submitted to the USPTO, petitioners/applicants should consider redacting such personal information from the documents before submitting them to the USPTO. Petitioner/applicant is advised that the record of a patent application is available to the public after publication of the application (unless a non-publication request in compliance with 37 CFR 1.213(a) is made in the application) or issuance of a patent. Furthermore, the record from an abandoned application may also be available to the public if the application is referenced in a published application or an issued patent (see 37 CFR 1.14). Checks and credit card authorization forms PTO-2038 submitted for payment purposes are not retained in the application file and therefore are not publicly available. Petitioner/applicant is advised that documents which form the record of a patent application (such as the PTO/SB/01) are placed into the Privacy Act system of records DEPARTMENT OF COMMERCE, COMMERCE-PAT-7, System name: *Patent Application Files*. Documents not retained in an application file (such as the PTO-2038) are placed into the Privacy Act system of COMMERCE/PAT-TM-10, System name: *Deposit Accounts and Electronic Funds Transfer Profiles*.

LEGAL NAME OF SOLE OR FIRST INVENTOR:

(*E.g.*, Given Name (first and middle (if any)) and Family Name or Surname)

Robert M. Burke

Inventor's Signature: [signature]		Date (Optional): 8-2-14	
Residence: City: Los Gatos	State: CA	Country: US	
Mailing Address: 420 Alberto Way Unit #49			
City: Los Gatos	State: CA	Zip: 95032	Country: US

☐ Additional inventors are being named on the _____ supplemental sheet(s) PTO/AIA/10 attached hereto

PTO/SB/08a (01-10)
Approved for use through 07/31/2012. OMB 0651-0031
U.S. Patent and Trademark Office; U.S. DEPARTMENT OF COMMERCE

Under the Paperwork Reduction Act of 1995, no persons are required to respond to a collection of information unless it contains a valid OMB control number.

INFORMATION DISCLOSURE STATEMENT BY APPLICANT

(Not for submission under 37 CFR 1.99)

Application Number	14338240
Filing Date	2014-07-22
First Named Inventor	Robert M. Burke II
Art Unit	N/A
Examiner Name	Not Yet Assigned
Attorney Docket Number	123205-198706

U.S.PATENTS Remove

Examiner Initial*	Cite No	Patent Number	Kind Code[1]	Issue Date	Name of Patentee or Applicant of cited Document	Pages,Columns,Lines where Relevant Passages or Relevant Figures Appear
	1	6516416		2003-02-04	Gregg et al.	
	2	6694429		2004-02-17	Kalmanek, Jr. et al.	

If you wish to add additional U.S. Patent citation information please click the Add button. Add

U.S.PATENT APPLICATION PUBLICATIONS Remove

Examiner Initial*	Cite No	Publication Number	Kind Code[1]	Publication Date	Name of Patentee or Applicant of cited Document	Pages,Columns,Lines where Relevant Passages or Relevant Figures Appear
	1	20010051996		2001-12-13	Cooper et al.	
	2	20020059440		2002-05-16	Hudson et al.	
	3	20020103778		2002-08-01	Saxena	
	4	20020120577		2002-08-29	Hans et al.	

INFORMATION DISCLOSURE STATEMENT BY APPLICANT (Not for submission under 37 CFR 1.99)		
	Application Number	14338240
	Filing Date	2014-07-22
	First Named Inventor	Robert M. Burke II
	Art Unit	N/A
	Examiner Name	Not Yet Assigned
	Attorney Docket Number	123205-198706

	5	20020145981		2002-10-10	Klinker et al.	
	6	20020169865		2002-11-14	Tamoff	
	7	20030204602		2003-10-30	Hudson et al.	
	8	20030233281		2003-12-18	Takeuchi et al.	
	9	20050033990		2005-02-10	Harvey et al.	

If you wish to add additional U.S. Published Application citation information please click the Add button. Add

FOREIGN PATENT DOCUMENTS Remove

Examiner Initial*	Cite No	Foreign Document Number[3]	Country Code[2] i	Kind Code[4]	Publication Date	Name of Patentee or Applicant of cited Document	Pages,Columns,Lines where Relevant Passages or Relevant Figures Appear	T[5]
	1							☐

If you wish to add additional Foreign Patent Document citation information please click the Add button Add

NON-PATENT LITERATURE DOCUMENTS Remove

Examiner Initials*	Cite No	Include name of the author (in CAPITAL LETTERS), title of the article (when appropriate), title of the item (book, magazine, journal, serial, symposium, catalog, etc), date, pages(s), volume-issue number(s), publisher, city and/or country where published.	T[5]
	1		☐

If you wish to add additional non-patent literature document citation information please click the Add button Add

INFORMATION DISCLOSURE STATEMENT BY APPLICANT (Not for submission under 37 CFR 1.99)		
	Application Number	14338240
	Filing Date	2014-07-22
	First Named Inventor	Robert M. Burke II
	Art Unit	N/A
	Examiner Name	Not Yet Assigned
	Attorney Docket Number	123205-198706

EXAMINER SIGNATURE			
Examiner Signature		Date Considered	

*EXAMINER: Initial if reference considered, whether or not citation is in conformance with MPEP 609. Draw line through a citation if not in conformance and not considered. Include copy of this form with next communication to applicant.

[1] See Kind Codes of USPTO Patent Documents at www.USPTO.GOV or MPEP 901.04. [2] Enter office that issued the document, by the two-letter code (WIPO Standard ST.3). [3] For Japanese patent documents, the indication of the year of the reign of the Emperor must precede the serial number of the patent document. [4] Kind of document by the appropriate symbols as indicated on the document under WIPO Standard ST.16 if possible. [5] Applicant is to place a check mark here if English language translation is attached.

INFORMATION DISCLOSURE STATEMENT BY APPLICANT

(Not for submission under 37 CFR 1.99)

Application Number	14338240
Filing Date	2014-07-22
First Named Inventor	Robert M. Burke II
Art Unit	N/A
Examiner Name	Not Yet Assigned
Attorney Docket Number	123205-198706

CERTIFICATION STATEMENT

Please see 37 CFR 1.97 and 1.98 to make the appropriate selection(s):

☐ That each item of information contained in the information disclosure statement was first cited in any communication from a foreign patent office in a counterpart foreign application not more than three months prior to the filing of the information disclosure statement. See 37 CFR 1.97(e)(1).

OR

☐ That no item of information contained in the information disclosure statement was cited in a communication from a foreign patent office in a counterpart foreign application, and, to the knowledge of the person signing the certification after making reasonable inquiry, no item of information contained in the information disclosure statement was known to any individual designated in 37 CFR 1.56(c) more than three months prior to the filing of the information disclosure statement. See 37 CFR 1.97(e)(2).

☐ See attached certification statement.

☐ The fee set forth in 37 CFR 1.17 (p) has been submitted herewith.

☒ A certification statement is not submitted herewith.

SIGNATURE

A signature of the applicant or representative is required in accordance with CFR 1.33, 10.18. Please see CFR 1.4(d) for the form of the signature.

Signature	/Al AuYeung/	Date (YYYY-MM-DD)	2014-10-22
Name/Print	Al AuYeung	Registration Number	35432

This collection of information is required by 37 CFR 1.97 and 1.98. The information is required to obtain or retain a benefit by the public which is to file (and by the USPTO to process) an application. Confidentiality is governed by 35 U.S.C. 122 and 37 CFR 1.14. This collection is estimated to take 1 hour to complete, including gathering, preparing and submitting the completed application form to the USPTO. Time will vary depending upon the individual case. Any comments on the amount of time you require to complete this form and/or suggestions for reducing this burden, should be sent to the Chief Information Officer, U.S. Patent and Trademark Office, U.S. Department of Commerce, P.O. Box 1450, Alexandria, VA 22313-1450. DO NOT SEND FEES OR COMPLETED FORMS TO THIS ADDRESS. **SEND TO: Commissioner for Patents, P.O. Box 1450, Alexandria, VA 22313-1450.**

Privacy Act Statement

The Privacy Act of 1974 (P.L. 93-579) requires that you be given certain information in connection with your submission of the attached form related to a patent application or patent. Accordingly, pursuant to the requirements of the Act, please be advised that: (1) the general authority for the collection of this information is 35 U.S.C. 2(b)(2); (2) furnishing of the information solicited is voluntary; and (3) the principal purpose for which the information is used by the U.S. Patent and Trademark Office is to process and/or examine your submission related to a patent application or patent. If you do not furnish the requested information, the U.S. Patent and Trademark Office may not be able to process and/or examine your submission, which may result in termination of proceedings or abandonment of the application or expiration of the patent.

The information provided by you in this form will be subject to the following routine uses:

1. The information on this form will be treated confidentially to the extent allowed under the Freedom of Information Act (5 U.S.C. 552) and the Privacy Act (5 U.S.C. 552a). Records from this system of records may be disclosed to the Department of Justice to determine whether the Freedom of Information Act requires disclosure of these record s.

2. A record from this system of records may be disclosed, as a routine use, in the course of presenting evidence to a court, magistrate, or administrative tribunal, including disclosures to opposing counsel in the course of settlement negotiations.

3. A record in this system of records may be disclosed, as a routine use, to a Member of Congress submitting a request involving an individual, to whom the record pertains, when the individual has requested assistance from the Member with respect to the subject matter of the record.

4. A record in this system of records may be disclosed, as a routine use, to a contractor of the Agency having need for the information in order to perform a contract. Recipients of information shall be required to comply with the requirements of the Privacy Act of 1974, as amended, pursuant to 5 U.S.C. 552a(m).

5. A record related to an International Application filed under the Patent Cooperation Treaty in this system of records may be disclosed, as a routine use, to the International Bureau of the World Intellectual Property Organization, pursuant to the Patent Cooperation Treaty.

6. A record in this system of records may be disclosed, as a routine use, to another federal agency for purposes of National Security review (35 U.S.C. 181) and for review pursuant to the Atomic Energy Act (42 U.S.C. 218(c)).

7. A record from this system of records may be disclosed, as a routine use, to the Administrator, General Services, or his/her designee, during an inspection of records conducted by GSA as part of that agency's responsibility to recommend improvements in records management practices and programs, under authority of 44 U.S.C. 2904 and 2906. Such disclosure shall be made in accordance with the GSA regulations governing inspection of records for this purpose, and any other relevant (i.e., GSA or Commerce) directive. Such disclosure shall not be used to make determinations about individuals.

8. A record from this system of records may be disclosed, as a routine use, to the public after either publication of the application pursuant to 35 U.S.C. 122(b) or issuance of a patent pursuant to 35 U.S.C. 151. Further, a record may be disclosed, subject to the limitations of 37 CFR 1.14, as a routine use, to the public if the record was filed in an application which became abandoned or in which the proceedings were terminated and which application is referenced by either a published application, an application open to public inspections or an issued patent.

9. A record from this system of records may be disclosed, as a routine use, to a Federal, State, or local law enforcement agency, if the USPTO becomes aware of a violation or potential violation of law or regulation.

Electronic Patent Application Fee Transmittal

Application Number:	14338240
Filing Date:	22-Jul-2014
Title of Invention:	SYSTEM FOR REGULATING ACCESS TO AND DISTRIBUTING CONTENT IN A NETWORK
First Named Inventor/Applicant Name:	Robert M. Burke
Filer:	Aloysius T.C. Auyeung
Attorney Docket Number:	123205-198706

Filed as Small Entity

Utility under 35 USC 111(a) Filing Fees

Description	Fee Code	Quantity	Amount	Sub-Total in USD($)
Basic Filing:				
Utility filing Fee (Electronic filing)	4011	1	70	70
Utility Search Fee	2111	1	300	300
Utility Examination Fee	2311	1	360	360
Pages:				
Claims:				
Claims in excess of 20	2202	28	40	1120
Miscellaneous-Filing:				
Late Filing Fee for Oath or Declaration	2051	1	70	70

Description	Fee Code	Quantity	Amount	Sub-Total in USD($)
Petition:				
Patent-Appeals-and-Interference:				
Post-Allowance-and-Post-Issuance:				
Extension-of-Time:				
Miscellaneous:				
		Total in USD ($)		**1920**

Electronic Acknowledgement Receipt

EFS ID:	20491061
Application Number:	14338240
International Application Number:	
Confirmation Number:	7564
Title of Invention:	SYSTEM FOR REGULATING ACCESS TO AND DISTRIBUTING CONTENT IN A NETWORK
First Named Inventor/Applicant Name:	Robert M. Burke
Customer Number:	60172
Filer:	Aloysius T.C. Auyeung/Melee Christopherson
Filer Authorized By:	Aloysius T.C. Auyeung
Attorney Docket Number:	123205-198706
Receipt Date:	22-OCT-2014
Filing Date:	22-JUL-2014
Time Stamp:	19:24:37
Application Type:	Utility under 35 USC 111(a)

Payment information:

Submitted with Payment	yes
Payment Type	Deposit Account
Payment was successfully received in RAM	$1920
RAM confirmation Number	5360
Deposit Account	500393
Authorized User	

File Listing:

Document Number	Document Description	File Name	File Size(Bytes)/ Message Digest	Multi Part /.zip	Pages (if appl.)

DISH, Exh. 1005, p. 0127

1	Transmittal Letter	P001C2_Transmittal.pdf	59714 67147ff7f1630bf9470fa750e532abd5e6e1ed5c	no	1
Warnings:					
Information:					
2	Supplemental Response or Supplemental Amendment	P001C2_Suppl_PrelimAmdmt.pdf	99812 a2e239ed2692347b14ca7853f8030b247a89a35b	no	13
Warnings:					
Information:					
3	Oath or Declaration filed	P001C2_Declarations.pdf	2981395 26892fab01dce5a9c6eb2225466b0dba6438df62	no	3
Warnings:					
Information:					
4	Power of Attorney	P001C2_POA.pdf	2623750 b3f6c4d6e932e1c333ece5adf1833995e3d43935	no	3
Warnings:					
Information:					
5	Information Disclosure Statement (IDS) Form (SB08)	BC_P001C2_IDS.pdf	612618 0ca5e0e0ea7b7b266be8054d71be16db9a930ac4	no	5
Warnings:					
Information:					
6	Fee Worksheet (SB06)	fee-info.pdf	38648 8fbfeed72913f9708ee538298c5d5da8dfe7cbbe	no	2
Warnings:					
Information:					
			Total Files Size (in bytes):	6415937	

This Acknowledgement Receipt evidences receipt on the noted date by the USPTO of the indicated documents, characterized by the applicant, and including page counts, where applicable. It serves as evidence of receipt similar to a Post Card, as described in MPEP 503.

New Applications Under 35 U.S.C. 111

If a new application is being filed and the application includes the necessary components for a filing date (see 37 CFR 1.53(b)-(d) and MPEP 506), a Filing Receipt (37 CFR 1.54) will be issued in due course and the date shown on this Acknowledgement Receipt will establish the filing date of the application.

National Stage of an International Application under 35 U.S.C. 371

If a timely submission to enter the national stage of an international application is compliant with the conditions of 35 U.S.C. 371 and other applicable requirements a Form PCT/DO/EO/903 indicating acceptance of the application as a national stage submission under 35 U.S.C. 371 will be issued in addition to the Filing Receipt, in due course.

New International Application Filed with the USPTO as a Receiving Office

If a new international application is being filed and the international application includes the necessary components for an international filing date (see PCT Article 11 and MPEP 1810), a Notification of the International Application Number and of the International Filing Date (Form PCT/RO/105) will be issued in due course, subject to prescriptions concerning national security, and the date shown on this Acknowledgement Receipt will establish the international filing date of the application.

IN THE UNITED STATES PATENT AND TRADEMARK OFFICE

First Named Inventor: Robert M. Burke	Examiner: Not Yet Assigned
Application No.: 14/338,240	Art Group: Not Yet Assigned
Filed: July 22, 2014	Confirmation No. 7564
For: SYSTEM FOR REGULATING ACCESS TO AND DISTRIBUTING CONTENT IN A NETWORK	

Mail Stop MISSING PARTS
Commissioner for Patents
PO Box 1450
Alexandria, VA 22313-1450

RESPONSE TO NOTICE TO FILE MISSING PARTS OF NONPROVISIONAL APPLICATION (FILING DATE GRANTED)

Sir:

Enclosed for filing in the above-referenced patent application in response to the Notice to File Missing Parts of Nonprovisional Application mailed August 4, 2014, are the following:

(1) A Supplemental Preliminary Amendment;

(2) A copy of the signed Declaration from all inventors;

(3) A copy of the signed Power of Attorney; and

(4) Payment by Deposit Account in the amount of $1920.00 (basic filing fee, surcharge, search fee, exam fee and 28 additional claims).

The Commissioner is authorized to charge shortages or credit overpayments to Deposit Account No. 500393.

Respectfully submitted,
SCHWABE, WILLIAMSON & WYATT, P.C.

Dated: October 22, 2014

/Al AuYeung/
Al AuYeung, Reg. No. 35,432

Pacwest Center, Suite 1600
1211 SW Fifth Avenue
Portland, OR 97204
Telephone: (503) 222-9981

Doc Code: PA..
Document Description: Power of Attorney

PTO/AIA/82A (07-13)
Approved for use through 11/30/2014. OMB 0651-0051
U.S. Patent and Trademark Office; U.S. DEPARTMENT OF COMMERCE
Under the Paperwork Reduction Act of 1995, no persons are required to respond to a collection of information unless it displays a valid OMB control number.

TRANSMITTAL FOR POWER OF ATTORNEY TO ONE OR MORE REGISTERED PRACTITIONERS

NOTE: This form is to be submitted with the Power of Attorney by Applicant form (PTO/AIA/82B) to identify the application to which the Power of Attorney is directed, in accordance with 37 CFR 1.5, unless the application number and filing date are identified in the Power of Attorney by Applicant form. If neither form PTO/AIA/82A nor form PTO/AIA82B identifies the application to which the Power of Attorney is directed, the Power of Attorney will not be recognized in the application.

Application Number	14/338,240
Filing Date	July 22, 2014
First Named Inventor	Robert M. Burke
Title	SYSTEM FOR REGULATING ACCESS TO AND DISTRIBUTING CONTENT IN A NETWORK
Art Unit	2465
Examiner Name	Not Yet Assigned
Attorney Docket Number	123205-198706

SIGNATURE of Applicant or Patent Practitioner

Signature	/Al AuYeung/	Date (Optional)	2014-10-22
Name	Al AuYeung	Registration Number	35432
Title (if Applicant is a juristic entity)			
Applicant Name (if Applicant is a juristic entity)			

NOTE: This form must be signed in accordance with 37 CFR 1.33. See 37 CFR 1.4(d) for signature requirements and certifications. If more than one applicant, use multiple forms.

☑ *Total of 1 forms are submitted.

This collection of information is required by 37 CFR 1.131, 1.32, and 1.33. The information is required to obtain or retain a benefit by the public which is to file (and by the USPTO to process) an application. Confidentiality is governed by 35 U.S.C. 122 and 37 CFR 1.11 and 1.14. This collection is estimated to take 3 minutes to complete, including gathering, preparing, and submitting the completed application form to the USPTO. Time will vary depending upon the individual case. Any comments on the amount of time you require to complete this form and/or suggestions for reducing this burden, should be sent to the Chief Information Officer, U.S. Patent and Trademark Office, U.S. Department of Commerce, P.O. Box 1450, Alexandria, VA 22313-1450. DO NOT SEND FEES OR COMPLETED FORMS TO THIS ADDRESS. **SEND TO: Commissioner for Patents, P.O. Box 1450, Alexandria, VA 22313-1450.**

If you need assistance in completing the form, call 1-800-PTO-9199 and select option 2.

PTO/AIA/80 (07-12)
Approved for use through 11/30/2014. OMB 0651-0035
U.S. Patent and Trademark Office: U.S DEPARTMENT OF COMMERCE
Under the Paperwork Reduction Act of 1995, no persons are required to respond to a collection of information unless it displays a valid OMB control number.

POWER OF ATTORNEY TO PROSECUTE APPLICATIONS BEFORE THE USPTO

I hereby revoke all previous powers of attorney given in the application identified in the attached statement under 37 CFR 3.73(c).

I hereby appoint:

☑ Practitioners associated with Customer Number: 60172

OR

☐ Practitioner(s) named below (if more than ten patent practitioners are to be named, then a customer number must be used):

Name	Registration Number	Name	Registration Number

As attorney(s) or agent(s) to represent the undersigned before the United States Patent and Trademark Office (USPTO) in connection with any and all patent applications assigned only to the undersigned according to the USPTO assignment records or assignments documents attached to this form in accordance with 37 CFR 3.73(c).

Please change the correspondence address for the application identified in the attached statement under 37 CFR 3.73(c) to:

☑ The address associated with Customer Number: 60172

OR

☐	Firm or Individual Name		
	Address		
	City		
	Country		
	Telephone		Email

Assignee Name and Address: Burke & Carman
429 Alberto Way Unit #49
Los Gatos CA 95032

A copy of this form, together with a statement under 37 CFR 3.73(c) (Form PTO/SB/96 or equivalent) is required to be Filed in each application in which this form is used. The statement under 37 CFR 3.73(c) may be completed by one of The practitioners appointed in this form, and must identify the application in which this Power of Attorney is to be filed.

SIGNATURE of Assignee of Record

The individual whose signature and title is supplied below is authorized to act on behalf of the assignee

Signature	/RMBurke II/	Date	8-2-14
Name	Robert M. Burke	Telephone	408-896-7896
Title			

This collection of information is required by 37 CFR 1.31, 1.32 and 1.33. The information is required to obtain or retain a benefit by the public which is to file (and by the USPTO to process) an application. Confidentiality is governed by 35 U.S.C. 122 and 37 CFR 1.11 and 1.14. This collection is estimated to take 3 minutes to complete, including gathering, preparing, and submitting the completed application form to the USPTO. Time will vary depending upon the individual case. Any comments on the amount of time you require to complete this form and/or suggestions for reducing this burden, should be sent to the Chief Information Officer, U.S. Patent and Trademark Office, U.S. Department of Commerce, P.O. Box 1450, Alexandria, VA 22313-1450. DO NOT SEND FEES OR COMPLETED FORMS TO THIS ADDRESS. **SEND TO: Commissioner for Patents, P.O. Box 1450, Alexandria, VA 22313-1450.**

If you need assistance in completing the form, call 1-800-PTO-9199 and select option 2.

PTO/AIA/80 (07-12)
Approved for use through 11/30/2014. OMB 0651-0035
U.S. Patent and Trademark Office: U.S DEPARTMENT OF COMMERCE
Under the Paperwork Reduction Act of 1995, no persons are required to respond to a collection of information unless it displays a valid OMB control number.

POWER OF ATTORNEY TO PROSECUTE APPLICATIONS BEFORE THE USPTO

I hereby revoke all previous powers of attorney given in the application identified in the attached statement under 37 CFR 3.73(c).

I hereby appoint:

☑ Practitioners associated with Customer Number: **60172**

OR

☐ Practitioner(s) named below (if more than ten patent practitioners are to be named, then a customer number must be used):

Name	Registration Number	Name	Registration Number

As attorney(s) or agent(s) to represent the undersigned before the United States Patent and Trademark Office (USPTO) in connection with any and all patent applications assigned only to the undersigned according to the USPTO assignment records or assignments documents attached to this form in accordance with 37 CFR 3.73(c).

Please change the correspondence address for the application identified in the attached statement under 37 CFR 3.73(c) to:

☑ The address associated with Customer Number: **60172**

OR

☐	Firm or Individual Name		
	Address		
	City		
	Country		
	Telephone		Email

Assignee Name and Address: Burke & Carman
420 Alberto Way Unit #49
Los Gatos CA 95032

A copy of this form, together with a statement under 37 CFR 3.73(c) (Form PTO/SB/96 or equivalent) is required to be Filed in each application in which this form is used. The statement under 37 CFR 3.73(c) may be completed by one of The practitioners appointed in this form, and must identify the application in which this Power of Attorney is to be filed.

SIGNATURE of Assignee of Record

The individual whose signature and title is supplied below is authorized to act on behalf of the assignee

Signature		Date	8/3/14
Name	D. Dale Carman	Telephone	978 585 9524
Title			

This collection of information is required by 37 CFR 1.31, 1.32 and 1.33. The information is required to obtain or retain a benefit by the public which is to file (and by the USPTO to process) an application. Confidentiality is governed by 35 U.S.C. 122 and 37 CFR 1.11 and 1.14. This collection is estimated to take 3 minutes to complete, including gathering, preparing, and submitting the completed application form to the USPTO. Time will vary depending upon the individual case. Any comments on the amount of time you require to complete this form and/or suggestions for reducing this burden, should be sent to the Chief Information Officer, U.S. Patent and Trademark Office, U.S. Department of Commerce, P.O. Box 1450, Alexandria, VA 22313-1450. DO NOT SEND FEES OR COMPLETED FORMS TO THIS ADDRESS. **SEND TO: Commissioner for Patents, P.O. Box 1450, Alexandria, VA 22313-1450.**

If you need assistance in completing the form, call 1-800-PTO-9199 and select option 2.

PTO/SB/06 (09-11)
Approved for use through 1/31/2014. OMB 0651-0032
U.S. Patent and Trademark Office; U.S. DEPARTMENT OF COMMERCE
Under the Paperwork Reduction Act of 1995, no persons are required to respond to a collection of information unless it displays a valid OMB control number.

PATENT APPLICATION FEE DETERMINATION RECORD Substitute for Form PTO-875	Application or Docket Number 14/338,240	Filing Date 07/22/2014	☐ To be Mailed

ENTITY: ☐ LARGE ☒ SMALL ☐ MICRO

APPLICATION AS FILED – PART I

FOR	(Column 1) NUMBER FILED	(Column 2) NUMBER EXTRA	RATE ($)	FEE ($)
☐ BASIC FEE (37 CFR 1.16(a), (b), or (c))	N/A	N/A	N/A	
☐ SEARCH FEE (37 CFR 1.16(k), (i), or (m))	N/A	N/A	N/A	
☐ EXAMINATION FEE (37 CFR 1.16(o), (p), or (q))	N/A	N/A	N/A	
TOTAL CLAIMS (37 CFR 1.16(i))	minus 20 =	*	X $ =	
INDEPENDENT CLAIMS (37 CFR 1.16(h))	minus 3 =	*	X $ =	
☐ APPLICATION SIZE FEE (37 CFR 1.16(s))	If the specification and drawings exceed 100 sheets of paper, the application size fee due is $310 ($155 for small entity) for each additional 50 sheets or fraction thereof. See 35 U.S.C. 41(a)(1)(G) and 37 CFR 1.16(s).			
☐ MULTIPLE DEPENDENT CLAIM PRESENT (37 CFR 1.16(j))				
* If the difference in column 1 is less than zero, enter "0" in column 2.			TOTAL	

APPLICATION AS AMENDED – PART II

AMENDMENT	10/22/2014	(Column 1) CLAIMS REMAINING AFTER AMENDMENT		(Column 2) HIGHEST NUMBER PREVIOUSLY PAID FOR	(Column 3) PRESENT EXTRA	RATE ($)	ADDITIONAL FEE ($)
	Total (37 CFR 1.16(i))	* 48	Minus	** 48	= 0	X $40 =	0
	Independent (37 CFR 1.16(h))	* 2	Minus	***3	= 0	X $210 =	0
	☐ Application Size Fee (37 CFR 1.16(s))						
	☐ FIRST PRESENTATION OF MULTIPLE DEPENDENT CLAIM (37 CFR 1.16(j))						
						TOTAL ADD'L FEE	0

AMENDMENT		(Column 1) CLAIMS REMAINING AFTER AMENDMENT		(Column 2) HIGHEST NUMBER PREVIOUSLY PAID FOR	(Column 3) PRESENT EXTRA	RATE ($)	ADDITIONAL FEE ($)
	Total (37 CFR 1.16(i))	*	Minus	**	=	X $ =	
	Independent (37 CFR 1.16(h))	*	Minus	***	=	X $ =	
	☐ Application Size Fee (37 CFR 1.16(s))						
	☐ FIRST PRESENTATION OF MULTIPLE DEPENDENT CLAIM (37 CFR 1.16(j))						
						TOTAL ADD'L FEE	

* If the entry in column 1 is less than the entry in column 2, write "0" in column 3.
** If the "Highest Number Previously Paid For" IN THIS SPACE is less than 20, enter "20".
*** If the "Highest Number Previously Paid For" IN THIS SPACE is less than 3, enter "3".
The "Highest Number Previously Paid For" (Total or Independent) is the highest number found in the appropriate box in column 1.

LIE
/MAMYE WAGSTAFF/

This collection of information is required by 37 CFR 1.16. The information is required to obtain or retain a benefit by the public which is to file (and by the USPTO to process) an application. Confidentiality is governed by 35 U.S.C. 122 and 37 CFR 1.14. This collection is estimated to take 12 minutes to complete, including gathering, preparing, and submitting the completed application form to the USPTO. Time will vary depending upon the individual case. Any comments on the amount of time you require to complete this form and/or suggestions for reducing this burden, should be sent to the Chief Information Officer, U.S. Patent and Trademark Office, U.S. Department of Commerce, P.O. Box 1450, Alexandria, VA 22313-1450. DO NOT SEND FEES OR COMPLETED FORMS TO THIS ADDRESS. **SEND TO: Commissioner for Patents, P.O. Box 1450, Alexandria, VA 22313-1450.**
If you need assistance in completing the form, call 1-800-PTO-9199 and select option 2.

UNITED STATES PATENT AND TRADEMARK OFFICE

UNITED STATES DEPARTMENT OF COMMERCE
United States Patent and Trademark Office
Address: COMMISSIONER FOR PATENTS
P.O. Box 1450
Alexandria, Virginia 22313-1450
www.uspto.gov

APPLICATION NUMBER	FILING or 371(c) DATE	GRP ART UNIT	FIL FEE REC'D	ATTY.DOCKET.NO	TOT CLAIMS	IND CLAIMS
14/338,240	07/22/2014	2465	1920	123205-198706	48	2

CONFIRMATION NO. 7564

UPDATED FILING RECEIPT

60172
SCHWABE, WILLIAMSON & WYATT, P.C.
1420 FIFTH AVENUE, SUITE 3400
SEATTLE, WA 98101-4010

Date Mailed: 12/11/2014

Receipt is acknowledged of this non-provisional patent application. The application will be taken up for examination in due course. Applicant will be notified as to the results of the examination. Any correspondence concerning the application must include the following identification information: the U.S. APPLICATION NUMBER, FILING DATE, NAME OF APPLICANT, and TITLE OF INVENTION. Fees transmitted by check or draft are subject to collection. Please verify the accuracy of the data presented on this receipt. **If an error is noted on this Filing Receipt, please submit a written request for a Filing Receipt Correction. Please provide a copy of this Filing Receipt with the changes noted thereon. If you received a "Notice to File Missing Parts" for this application, please submit any corrections to this Filing Receipt with your reply to the Notice. When the USPTO processes the reply to the Notice, the USPTO will generate another Filing Receipt incorporating the requested corrections**

Inventor(s)

Robert M. Burke II, Los Gatos, CA;
David Z. Carman, Tulsa, OK;

Applicant(s)

Robert M. Burke II, Los Gatos, CA;
David Z. Carman, Tulsa, OK;

Power of Attorney: The patent practitioners associated with Customer Number 60172

Domestic Priority data as claimed by applicant

This application is a CON of 13/369,174 02/08/2012 PAT 8799468
which is a CON of 10/989,023 11/16/2004 PAT 8122128
which claims benefit of 60/563,064 04/16/2004
and claims benefit of 60/538,370 01/22/2004
and claims benefit of 60/523,057 11/18/2003

Foreign Applications for which priority is claimed (You may be eligible to benefit from the **Patent Prosecution Highway** program at the USPTO. Please see http://www.uspto.gov for more information.) - None.
Foreign application information must be provided in an Application Data Sheet in order to constitute a claim to foreign priority. See 37 CFR 1.55 and 1.76.

Permission to Access - A proper **Authorization to Permit Access to Application by Participating Offices** (PTO/SB/39 or its equivalent) has been received by the USPTO.

If Required, Foreign Filing License Granted: 08/04/2014

The country code and number of your priority application, to be used for filing abroad under the Paris Convention, is **US 14/338,240**

Projected Publication Date: 03/19/2015

Non-Publication Request: No

Early Publication Request: No
**** SMALL ENTITY ****
Title

SYSTEM FOR REGULATING ACCESS TO AND DISTRIBUTING CONTENT IN A NETWORK

Preliminary Class

370

Statement under 37 CFR 1.55 or 1.78 for AIA (First Inventor to File) Transition Applications: No

PROTECTING YOUR INVENTION OUTSIDE THE UNITED STATES

Since the rights granted by a U.S. patent extend only throughout the territory of the United States and have no effect in a foreign country, an inventor who wishes patent protection in another country must apply for a patent in a specific country or in regional patent offices. Applicants may wish to consider the filing of an international application under the Patent Cooperation Treaty (PCT). An international (PCT) application generally has the same effect as a regular national patent application in each PCT-member country. The PCT process **simplifies** the filing of patent applications on the same invention in member countries, but **does not result** in a grant of "an international patent" and does not eliminate the need of applicants to file additional documents and fees in countries where patent protection is desired.

Almost every country has its own patent law, and a person desiring a patent in a particular country must make an application for patent in that country in accordance with its particular laws. Since the laws of many countries differ in various respects from the patent law of the United States, applicants are advised to seek guidance from specific foreign countries to ensure that patent rights are not lost prematurely.

Applicants also are advised that in the case of inventions made in the United States, the Director of the USPTO must issue a license before applicants can apply for a patent in a foreign country. The filing of a U.S. patent application serves as a request for a foreign filing license. The application's filing receipt contains further information and guidance as to the status of applicant's license for foreign filing.

Applicants may wish to consult the USPTO booklet, "General Information Concerning Patents" (specifically, the section entitled "Treaties and Foreign Patents") for more information on timeframes and deadlines for filing foreign patent applications. The guide is available either by contacting the USPTO Contact Center at 800-786-9199, or it can be viewed on the USPTO website at http://www.uspto.gov/web/offices/pac/doc/general/index.html.

For information on preventing theft of your intellectual property (patents, trademarks and copyrights), you may wish to consult the U.S. Government website, http://www.stopfakes.gov. Part of a Department of Commerce initiative, this website includes self-help "toolkits" giving innovators guidance on how to protect intellectual property in specific countries such as China, Korea and Mexico. For questions regarding patent enforcement issues, applicants may call the U.S. Government hotline at 1-866-999-HALT (1-866-999-4258).

DISH, Exh.1005, p.0136

LICENSE FOR FOREIGN FILING UNDER

Title 35, United States Code, Section 184

Title 37, Code of Federal Regulations, 5.11 & 5.15

GRANTED

The applicant has been granted a license under 35 U.S.C. 184, if the phrase "IF REQUIRED, FOREIGN FILING LICENSE GRANTED" followed by a date appears on this form. Such licenses are issued in all applications where the conditions for issuance of a license have been met, regardless of whether or not a license may be required as set forth in 37 CFR 5.15. The scope and limitations of this license are set forth in 37 CFR 5.15(a) unless an earlier license has been issued under 37 CFR 5.15(b). The license is subject to revocation upon written notification. The date indicated is the effective date of the license, unless an earlier license of similar scope has been granted under 37 CFR 5.13 or 5.14.

This license is to be retained by the licensee and may be used at any time on or after the effective date thereof unless it is revoked. This license is automatically transferred to any related applications(s) filed under 37 CFR 1.53(d). This license is not retroactive.

The grant of a license does not in any way lessen the responsibility of a licensee for the security of the subject matter as imposed by any Government contract or the provisions of existing laws relating to espionage and the national security or the export of technical data. Licensees should apprise themselves of current regulations especially with respect to certain countries, of other agencies, particularly the Office of Defense Trade Controls, Department of State (with respect to Arms, Munitions and Implements of War (22 CFR 121-128)); the Bureau of Industry and Security, Department of Commerce (15 CFR parts 730-774); the Office of Foreign AssetsControl, Department of Treasury (31 CFR Parts 500+) and the Department of Energy.

NOT GRANTED

No license under 35 U.S.C. 184 has been granted at this time, if the phrase "IF REQUIRED, FOREIGN FILING LICENSE GRANTED" DOES NOT appear on this form. Applicant may still petition for a license under 37 CFR 5.12, if a license is desired before the expiration of 6 months from the filing date of the application. If 6 months has lapsed from the filing date of this application and the licensee has not received any indication of a secrecy order under 35 U.S.C. 181, the licensee may foreign file the application pursuant to 37 CFR 5.15(b).

SelectUSA

The United States represents the largest, most dynamic marketplace in the world and is an unparalleled location for business investment, innovation, and commercialization of new technologies. The U.S. offers tremendous resources and advantages for those who invest and manufacture goods here. Through SelectUSA, our nation works to promote and facilitate business investment. SelectUSA provides information assistance to the international investor community; serves as an ombudsman for existing and potential investors; advocates on behalf of U.S. cities, states, and regions competing for global investment; and counsels U.S. economic development organizations on investment attraction best practices. To learn more about why the United States is the best country in the world to develop technology, manufacture products, deliver services, and grow your business, visit http://www.SelectUSA.gov or call +1-202-482-6800.

PATENT APPLICATION FEE DETERMINATION RECORD

Substitute for Form PTO-875

Application or Docket Number: 14/338,240

APPLICATION AS FILED - PART I

FOR	(Column 1) NUMBER FILED	(Column 2) NUMBER EXTRA	SMALL ENTITY RATE($)	SMALL ENTITY FEE($)	OR	OTHER THAN SMALL ENTITY RATE($)	OTHER THAN SMALL ENTITY FEE($)
BASIC FEE (37 CFR 1.16(a), (b), or (c))	N/A	N/A	N/A	70		N/A	
SEARCH FEE (37 CFR 1.16(k), (i), or (m))	N/A	N/A	N/A	300		N/A	
EXAMINATION FEE (37 CFR 1.16(o), (p), or (q))	N/A	N/A	N/A	360		N/A	
TOTAL CLAIMS (37 CFR 1.16(i))	48 minus 20 =	* 28	x 40 =	1120	OR		
INDEPENDENT CLAIMS (37 CFR 1.16(h))	2 minus 3 =	*	x 210 =	0.00			
APPLICATION SIZE FEE (37 CFR 1.16(s))	If the specification and drawings exceed 100 sheets of paper, the application size fee due is $310 ($155 for small entity) for each additional 50 sheets or fraction thereof. See 35 U.S.C. 41(a)(1)(G) and 37 CFR 1.16(s).			0.00			
MULTIPLE DEPENDENT CLAIM PRESENT (37 CFR 1.16(j))				0.00			
* If the difference in column 1 is less than zero, enter "0" in column 2.			TOTAL	1850		TOTAL	

APPLICATION AS AMENDED - PART II

		(Column 1) CLAIMS REMAINING AFTER AMENDMENT		(Column 2) HIGHEST NUMBER PREVIOUSLY PAID FOR	(Column 3) PRESENT EXTRA	SMALL ENTITY RATE($)	SMALL ENTITY ADDITIONAL FEE($)	OR	OTHER THAN SMALL ENTITY RATE($)	OTHER THAN SMALL ENTITY ADDITIONAL FEE($)
AMENDMENT A	Total (37 CFR 1.16(i))	*	Minus	**	=	x =		OR	x =	
	Independent (37 CFR 1.16(h))	*	Minus	***	=	x =		OR	x =	
	Application Size Fee (37 CFR 1.16(s))									
	FIRST PRESENTATION OF MULTIPLE DEPENDENT CLAIM (37 CFR 1.16(j))							OR		
						TOTAL ADD'L FEE		OR	TOTAL ADD'L FEE	

		(Column 1) CLAIMS REMAINING AFTER AMENDMENT		(Column 2) HIGHEST NUMBER PREVIOUSLY PAID FOR	(Column 3) PRESENT EXTRA	RATE($)	ADDITIONAL FEE($)		RATE($)	ADDITIONAL FEE($)
AMENDMENT B	Total (37 CFR 1.16(i))	*	Minus	**	=	x =		OR	x =	
	Independent (37 CFR 1.16(h))	*	Minus	***	=	x =		OR	x =	
	Application Size Fee (37 CFR 1.16(s))									
	FIRST PRESENTATION OF MULTIPLE DEPENDENT CLAIM (37 CFR 1.16(j))							OR		
						TOTAL ADD'L FEE		OR	TOTAL ADD'L FEE	

* If the entry in column 1 is less than the entry in column 2, write "0" in column 3.
** If the "Highest Number Previously Paid For" IN THIS SPACE is less than 20, enter "20".
*** If the "Highest Number Previously Paid For" IN THIS SPACE is less than 3, enter "3".
The "Highest Number Previously Paid For" (Total or Independent) is the highest found in the appropriate box in column 1.

UNITED STATES PATENT AND TRADEMARK OFFICE

UNITED STATES DEPARTMENT OF COMMERCE
United States Patent and Trademark Office
Address: COMMISSIONER FOR PATENTS
P.O. Box 1450
Alexandria, Virginia 22313-1450
www.uspto.gov

APPLICATION NUMBER	FILING OR 371(C) DATE	FIRST NAMED APPLICANT	ATTY. DOCKET NO./TITLE
14/338,240	07/22/2014	Robert M. Burke II	123205-198706

CONFIRMATION NO. 7564

60172
SCHWABE, WILLIAMSON & WYATT, P.C.
1420 FIFTH AVENUE, SUITE 3400
SEATTLE, WA 98101-4010

NOTICE

OC000000072239468

Date Mailed: 12/11/2014

INFORMATIONAL NOTICE TO APPLICANT

Applicant is notified that the above-identified application contains the deficiencies noted below. No period for reply is set forth in this notice for correction of these deficiencies. However, if a deficiency relates to the inventor's oath or declaration, the applicant must file an oath or declaration in compliance with 37 CFR 1.63, or a substitute statement in compliance with 37 CFR 1.64, executed by or with respect to each actual inventor no later than the expiration of the time period set in the "Notice of Allowability" to avoid abandonment. See 37 CFR 1.53(f).

The item(s) indicated below are also required and should be submitted with any reply to this notice to avoid further processing delays.

A new inventor's oath or declaration that identifies this application (e.g., by Application Number and filing date) is required. The inventor's oath or declaration does not comply with 37 CFR 1.63 in that it:

- does not state that the above-identified application was made or authorized to be made by the person executing the oath or declaration.

David Z. Carman

UNITED STATES PATENT AND TRADEMARK OFFICE

UNITED STATES DEPARTMENT OF COMMERCE
United States Patent and Trademark Office
Address: COMMISSIONER FOR PATENTS
P.O. Box 1450
Alexandria, Virginia 22313-1450
www.uspto.gov

APPLICATION NUMBER	FILING OR 371(C) DATE	FIRST NAMED APPLICANT	ATTY. DOCKET NO./TITLE
14/338,240	07/22/2014	Robert M. Burke II	123205-198706

CONFIRMATION NO. 7564

POWER OF ATTORNEY NOTICE

60172
SCHWABE, WILLIAMSON & WYATT, P.C.
1420 FIFTH AVENUE, SUITE 3400
SEATTLE, WA 98101-4010

OC000000072239700

Date Mailed: 12/11/2014

NOTICE REGARDING CHANGE OF POWER OF ATTORNEY

This is in response to the Power of Attorney filed 10/22/2014.

- The Power of Attorney to you in this application has been revoked by the applicant. Future correspondence will be mailed to the new address of record(37 CFR 1.33).

/atesfai/

Office of Data Management, Application Assistance Unit (571) 272-4000, or (571) 272-4200, or 1-888-786-0101

UNITED STATES PATENT AND TRADEMARK OFFICE

UNITED STATES DEPARTMENT OF COMMERCE
United States Patent and Trademark Office
Address: COMMISSIONER FOR PATENTS
P.O. Box 1450
Alexandria, Virginia 22313-1450
www.uspto.gov

APPLICATION NUMBER	FILING OR 371(C) DATE	FIRST NAMED APPLICANT	ATTY. DOCKET NO./TITLE
14/338,240	07/22/2014	Robert M. Burke II	123205-198706

CONFIRMATION NO. 7564

POA ACCEPTANCE LETTER

60172
SCHWABE, WILLIAMSON & WYATT, P.C.
1420 FIFTH AVENUE, SUITE 3400
SEATTLE, WA 98101-4010

OC000000072239707

Date Mailed: 12/11/2014

NOTICE OF ACCEPTANCE OF POWER OF ATTORNEY

This is in response to the Power of Attorney filed 10/22/2014.

The Power of Attorney in this application is accepted. Correspondence in this application will be mailed to the above address as provided by 37 CFR 1.33.

/atesfai/

Office of Data Management, Application Assistance Unit (571) 272-4000, or (571) 272-4200, or 1-888-786-0101

IN THE UNITED STATES PATENT AND TRADEMARK OFFICE

In re Application for:	Examiner: Unassigned
Robert M. Burke	Art Group: Unassigned
Application No.: 14/338,240	Confirmation No: 7564
Filed: July 22, 2014	
For: SYSTEM FOR REGULATING ACCESS TO AND DISTRIBUTING CONTENT IN A NETWORK	

Mail Stop MISSING PARTS
Commissioner for Patents
PO Box 1450
Alexandria, VA 22313-1450

TRANSMITTAL LETTER

IN RESPONSE TO INFORMATION NOTICE TO APPLICANT

Attached for filing in the above-referenced patent application is the following:

(1) A copy of the fully executed Declaration for Inventor David Z. Carman.

The Commissioner is hereby authorized to charge shortages or credit overpayments to Deposit Account No. 500393.

Respectfully submitted,

SCHWABE, WILLIAMSON & WYATT, P.C.

Dated March 5, 2015

/Al AuYeung /
Al AuYeung
Reg. No. 35432

Pacwest Center, Suite 1600
1211 SW Fifth Avenue
Portland, Oregon 97204
Telephone: (503)222-9981

Doc Code: Oath

Document Description: Oath or declaration filed

PTO/AIA/08 (05-12)
Approved for use through 01/31/2014. OMB 0651-0032
U.S. Patent and Trademark Office; U.S. DEPARTMENT OF COMMERCE

Under the Paperwork Reduction Act of 1995, no persons are required to respond to a collection of information unless it contains a valid OMB control number.

DECLARATION FOR UTILITY OR DESIGN PATENT APPLICATION (37 CFR 1.63)

☐ Declaration Submitted With Initial Filing OR ■ Declaration Submitted After Initial Filing (surcharge (37 CFR 1.16(f)) required)

Attorney Docket Number	123205-198706
First Named Inventor	Robert M. Burke
COMPLETE IF KNOWN	
Application Number	14/338,240
Filing Date	July 22, 2014
Art Unit	Not Yet Assigned
Examiner Name	Not Yet Assigned

SYSTEM FOR REGULATING ACCESS TO AND DISTRIBUTING CONTENT IN A NETWORK

(Title of the Invention)

As a below named inventor, I hereby declare that:

This declaration is directed to:

☐ The attached application,

OR

■ United States Application Number or PCT International application number 14/338,240 filed on July 22, 2014.

The above-identified application was made or authorized to be made by me.

I believe I am the original inventor or an original joint inventor of a claimed invention in the application.

I hereby acknowledge that any willful false statement made in this declaration is punishable under 18 U.S.C. 1001 by fine or imprisonment of not more than five (5) years, or both.

Authorization To Permit Access To Application by Participating Office

☑ If checked, the undersigned hereby grants the USPTO authority to provide the European Patent Office (EPO), the Japan Patent Office (JPO), the Korean Intellectual Property Office (KIPO), the World Intellectual Property Office (WIPO), and any other intellectual property offices in which a foreign application claiming priority to the above-identified patent application is filed access to the above-identified patent application. See 37 CFR 1.14(c) and (h). This box should not be checked if the applicant does not wish the EPO, JPO, KIPO, WIPO, or other intellectual property office in which a foreign application claiming priority to the above-identified patent application is filed to have access to the above-identified patent application.

In accordance with 37 CFR 1.14(h)(3), access will be provided to a copy of the above-identified patent application with respect to: 1) the above-identified patent application-as-filed; 2) any foreign application to which the above-identified patent application claims priority under 35 U.S.C. 119(a)-(d) if a copy of the foreign application that satisfies the certified copy requirement of 37 CFR 1.55 has been filed in the above-identified patent application; and 3) any U.S. application-as-filed from which benefit is sought in the above-identified patent application.

In accordance with 37 CFR 1.14(c), access may be provided to information concerning the date of filing the Authorization to Permit Access to Application by Participating Offices.

This collection of information is required by 35 U.S.C. 115 and 37 CFR 1.63. The information is required to obtain or retain a benefit by the public which is to file (and by the USPTO to process) an application. Confidentiality is governed by 35 U.S.C. 122 and 37 CFR 1.11 and 1.14. This collection is estimated to take 21 minutes to complete, including gathering, preparing, and submitting the completed application form to the USPTO. Time will vary depending upon the individual case. Any comments on the amount of time you require to complete this form and/or suggestions for reducing this burden, should be sent to the Chief Information Officer, U.S. Patent and Trademark Office, U.S. Department of Commerce, P.O. Box 1450, Alexandria, VA 22313-1450. DO NOT SEND FEES OR COMPLETED FORMS TO THIS ADDRESS. **SEND TO: Commissioner for Patents, P.O. Box 1450, Alexandria, VA 22313-1450.**

If you need assistance in completing the form, call 1-800-PTO-9199 and select option 2.

PTO/AIA/08 (08-12)
Approved for use through 01/31/2014. OMB 0651-0032
U.S. Patent and Trademark Office: U.S. DEPARTMENT OF COMMERCE
Under the Paperwork Reduction Act of 1995, no persons are required to respond to a collection of information unless it contains a valid OMB control number.

DECLARATION — Utility or Design Patent Application

Direct all correspondence to: ☒ The address associated with Customer Number: **60172** OR ☐ Correspondence address below

Name		
Address		
City	State	Zip
Country	Telephone	Email

WARNING:

Petitioner/applicant is cautioned to avoid submitting personal information in documents filed in a patent application that may contribute to identity theft. Personal information such as social security numbers, bank account numbers, or credit card numbers (other than a check or credit card authorization form PTO-2038 submitted for payment purposes) is never required by the USPTO to support a petition or an application. If this type of personal information is included in documents submitted to the USPTO, petitioners/applicants should consider redacting such personal information from the documents before submitting them to the USPTO. Petitioner/applicant is advised that the record of a patent application is available to the public after publication of the application (unless a non-publication request in compliance with 37 CFR 1.213(a) is made in the application) or issuance of a patent. Furthermore, the record from an abandoned application may also be available to the public if the application is referenced in a published application or an issued patent (see 37 CFR 1.14). Checks and credit card authorization forms PTO-2038 submitted for payment purposes are not retained in the application file and therefore are not publicly available. Petitioner/applicant is advised that documents which form the record of a patent application (such as the PTO/SB/01) are placed into the Privacy Act system of records DEPARTMENT OF COMMERCE, COMMERCE-PAT-7, System name: *Patent Application Files*. Documents not retained in an application file (such as the PTO-2038) are placed into the Privacy Act system of COMMERCE/PAT-TM-10, System name: *Deposit Accounts and Electronic Funds Transfer Profiles*.

LEGAL NAME OF SOLE OR FIRST INVENTOR:

(*E.g.*, Given Name (first and middle (if any)) and Family Name or Surname)

David Z. Carman

Inventor's Signature	Date (Optional)
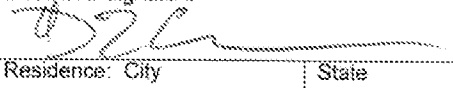	

Residence: City	State	Country
Tulsa	OK	US

Mailing Address: 1131 East 20th Street

City	State	Zip	Country
Tulsa	OK	74120	US

☐ Additional inventors are being named on this _____ supplemental sheet(s) PTO/AIA/10 attached hereto

Privacy Act Statement

The Privacy Act of 1974 (P.L. 93-579) requires that you be given certain information in connection with your submission of the attached form related to a patent application or patent. Accordingly, pursuant to the requirements of the Act, please be advised that: (1) the general authority for the collection of this information is 35 U.S.C. 2(b)(2); (2) furnishing of the information solicited is voluntary; and (3) the principal purpose for which the information is used by the U.S. Patent and Trademark Office is to process and/or examine your submission related to a patent application or patent. If you do not furnish the requested information, the U.S. Patent and Trademark Office may not be able to process and/or examine your submission, which may result in termination of proceedings or abandonment of the application or expiration of the patent.

The information provided by you in this form will be subject to the following routine uses:

1. The information on this form will be treated confidentially to the extent allowed under the Freedom of Information Act (5 U.S.C. 552) and the Privacy Act (5 U.S.C 552a). Records from this system of records may be disclosed to the Department of Justice to determine whether disclosure of these records is required by the Freedom of Information Act.
2. A record from this system of records may be disclosed, as a routine use, in the course of presenting evidence to a court, magistrate, or administrative tribunal, including disclosures to opposing counsel in the course of settlement negotiations.
3. A record in this system of records may be disclosed, as a routine use, to a Member of Congress submitting a request involving an individual, to whom the record pertains, when the individual has requested assistance from the Member with respect to the subject matter of the record.
4. A record in this system of records may be disclosed, as a routine use, to a contractor of the Agency having need for the information in order to perform a contract. Recipients of information shall be required to comply with the requirements of the Privacy Act of 1974, as amended, pursuant to 5 U.S.C. 552a(m).
5. A record related to an International Application filed under the Patent Cooperation Treaty in this system of records may be disclosed, as a routine use, to the International Bureau of the World Intellectual Property Organization, pursuant to the Patent Cooperation Treaty.
6. A record in this system of records may be disclosed, as a routine use, to another federal agency for purposes of National Security review (35 U.S.C. 181) and for review pursuant to the Atomic Energy Act (42 U.S.C. 218(c)).
7. A record from this system of records may be disclosed, as a routine use, to the Administrator, General Services, or his/her designee, during an inspection of records conducted by GSA as part of that agency's responsibility to recommend improvements in records management practices and programs, under authority of 44 U.S.C. 2904 and 2906. Such disclosure shall be made in accordance with the GSA regulations governing inspection of records for this purpose, and any other relevant (i.e., GSA or Commerce) directive. Such disclosure shall not be used to make determinations about individuals.
8. A record from this system of records may be disclosed, as a routine use, to the public after either publication of the application pursuant to 35 U.S.C. 122(b) or issuance of a patent pursuant to 35 U.S.C. 151. Further, a record may be disclosed, subject to the limitations of 37 CFR 1.14, as a routine use, to the public if the record was filed in an application which became abandoned or in which the proceedings were terminated and which application is referenced by either a published application, an application open to public inspection or an issued patent.
9. A record from this system of records may be disclosed, as a routine use, to a Federal, State, or local law enforcement agency, if the USPTO becomes aware of a violation or potential violation of law or regulation.

Electronic Acknowledgement Receipt

EFS ID:	21684370
Application Number:	14338240
International Application Number:	
Confirmation Number:	7564
Title of Invention:	SYSTEM FOR REGULATING ACCESS TO AND DISTRIBUTING CONTENT IN A NETWORK
First Named Inventor/Applicant Name:	Robert M. Burke
Customer Number:	60172
Filer:	Aloysius T.C. Auyeung
Filer Authorized By:	
Attorney Docket Number:	123205-198706
Receipt Date:	05-MAR-2015
Filing Date:	22-JUL-2014
Time Stamp:	13:29:07
Application Type:	Utility under 35 USC 111(a)

Payment information:

Submitted with Payment	no

File Listing:

Document Number	Document Description	File Name	File Size(Bytes)/ Message Digest	Multi Part /.zip	Pages (if appl.)
1	Transmittal Letter	P001C2_Transmittal.pdf	63663 8c5782d39e6aa54b847f57221072e300bbfe5477	no	1

Warnings:	
Information:	

2	Oath or Declaration filed	P001C2_Carman_Dec.pdf	2363851 f0d564ae4747ef14ff8a669cb914fe9eed96bf92	no	3

Warnings:	
Information:	
Total Files Size (in bytes):	2427514

This Acknowledgement Receipt evidences receipt on the noted date by the USPTO of the indicated documents, characterized by the applicant, and including page counts, where applicable. It serves as evidence of receipt similar to a Post Card, as described in MPEP 503.

New Applications Under 35 U.S.C. 111

If a new application is being filed and the application includes the necessary components for a filing date (see 37 CFR 1.53(b)-(d) and MPEP 506), a Filing Receipt (37 CFR 1.54) will be issued in due course and the date shown on this Acknowledgement Receipt will establish the filing date of the application.

National Stage of an International Application under 35 U.S.C. 371

If a timely submission to enter the national stage of an international application is compliant with the conditions of 35 U.S.C. 371 and other applicable requirements a Form PCT/DO/EO/903 indicating acceptance of the application as a national stage submission under 35 U.S.C. 371 will be issued in addition to the Filing Receipt, in due course.

New International Application Filed with the USPTO as a Receiving Office

If a new international application is being filed and the international application includes the necessary components for an international filing date (see PCT Article 11 and MPEP 1810), a Notification of the International Application Number and of the International Filing Date (Form PCT/RO/105) will be issued in due course, subject to prescriptions concerning national security, and the date shown on this Acknowledgement Receipt will establish the international filing date of the application.

UNITED STATES PATENT AND TRADEMARK OFFICE

UNITED STATES DEPARTMENT OF COMMERCE
United States Patent and Trademark Office
Address: COMMISSIONER FOR PATENTS
P.O. Box 1450
Alexandria, Virginia 22313-1450
www.uspto.gov

APPLICATION NUMBER	FILING OR 371(C) DATE	FIRST NAMED APPLICANT	ATTY. DOCKET NO./TITLE
14/338,240	07/22/2014	Robert M. Burke II	123205-198706

CONFIRMATION NO. 7564

60172
SCHWABE, WILLIAMSON & WYATT, P.C.
1420 FIFTH AVENUE, SUITE 3400
SEATTLE, WA 98101-4010

PUBLICATION NOTICE

OC000000074085524

Title:SYSTEM FOR REGULATING ACCESS TO AND DISTRIBUTING CONTENT IN A NETWORK

Publication No.US-2015-0081427-A1
Publication Date:03/19/2015

NOTICE OF PUBLICATION OF APPLICATION

The above-identified application will be electronically published as a patent application publication pursuant to 37 CFR 1.211, et seq. The patent application publication number and publication date are set forth above.

The publication may be accessed through the USPTO's publically available Searchable Databases via the Internet at www.uspto.gov. The direct link to access the publication is currently http://www.uspto.gov/patft/.

The publication process established by the Office does not provide for mailing a copy of the publication to applicant. A copy of the publication may be obtained from the Office upon payment of the appropriate fee set forth in 37 CFR 1.19(a)(1). Orders for copies of patent application publications are handled by the USPTO's Office of Public Records. The Office of Public Records can be reached by telephone at (703) 308-9726 or (800) 972-6382, by facsimile at (703) 305-8759, by mail addressed to the United States Patent and Trademark Office, Office of Public Records, Alexandria, VA 22313-1450 or via the Internet.

In addition, information on the status of the application, including the mailing date of Office actions and the dates of receipt of correspondence filed in the Office, may also be accessed via the Internet through the Patent Electronic Business Center at www.uspto.gov using the public side of the Patent Application Information and Retrieval (PAIR) system. The direct link to access this status information is currently http://pair.uspto.gov/. Prior to publication, such status information is confidential and may only be obtained by applicant using the private side of PAIR.

Further assistance in electronically accessing the publication, or about PAIR, is available by calling the Patent Electronic Business Center at 1-866-217-9197.

Office of Data Managment, Application Assistance Unit (571) 272-4000, or (571) 272-4200, or 1-888-786-0101

UNITED STATES PATENT AND TRADEMARK OFFICE

UNITED STATES DEPARTMENT OF COMMERCE
United States Patent and Trademark Office
Address: COMMISSIONER FOR PATENTS
P.O. Box 1450
Alexandria, Virginia 22313-1450
www.uspto.gov

APPLICATION NO.	FILING DATE	FIRST NAMED INVENTOR	ATTORNEY DOCKET NO.	CONFIRMATION NO.
14/338,240	07/22/2014	Robert M. Burke II	123205-198706	7564

60172 7590 12/21/2015

SCHWABE, WILLIAMSON & WYATT, P.C.
1420 FIFTH AVENUE, SUITE 3400
SEATTLE, WA 98101-4010

EXAMINER	
KHAJURIA, SHRIPAL K	

ART UNIT	PAPER NUMBER
2478	

NOTIFICATION DATE	DELIVERY MODE
12/21/2015	ELECTRONIC

Please find below and/or attached an Office communication concerning this application or proceeding.

The time period for reply, if any, is set in the attached communication.

Notice of the Office communication was sent electronically on above-indicated "Notification Date" to the following e-mail address(es):

patent@schwabe.com
IPDocketing@SCHWABE.com

Office Action Summary	Application No. 14/338,240	Applicant(s) BURKE ET AL.	
	Examiner SHRIPAL KHAJURIA	Art Unit 2478	AIA (First Inventor to File) Status No

-- The MAILING DATE of this communication appears on the cover sheet with the correspondence address --

Period for Reply

A SHORTENED STATUTORY PERIOD FOR REPLY IS SET TO EXPIRE *3* MONTHS FROM THE MAILING DATE OF THIS COMMUNICATION.

- Extensions of time may be available under the provisions of 37 CFR 1.136(a). In no event, however, may a reply be timely filed after SIX (6) MONTHS from the mailing date of this communication.
- If NO period for reply is specified above, the maximum statutory period will apply and will expire SIX (6) MONTHS from the mailing date of this communication.
- Failure to reply within the set or extended period for reply will, by statute, cause the application to become ABANDONED (35 U.S.C. § 133). Any reply received by the Office later than three months after the mailing date of this communication, even if timely filed, may reduce any earned patent term adjustment. See 37 CFR 1.704(b).

Status

1)☒ Responsive to communication(s) filed on *3/5/15*.

☐ A declaration(s)/affidavit(s) under **37 CFR 1.130(b)** was/were filed on _____.

2a)☐ This action is **FINAL**. 2b)☒ This action is non-final.

3)☐ An election was made by the applicant in response to a restriction requirement set forth during the interview on _____; the restriction requirement and election have been incorporated into this action.

4)☐ Since this application is in condition for allowance except for formal matters, prosecution as to the merits is closed in accordance with the practice under *Ex parte Quayle*, 1935 C.D. 11, 453 O.G. 213.

Disposition of Claims*

5)☒ Claim(s) *1-48* is/are pending in the application.

5a) Of the above claim(s) _____ is/are withdrawn from consideration.

6)☐ Claim(s) _____ is/are allowed.

7)☒ Claim(s) *1-48* is/are rejected.

8)☐ Claim(s) _____ is/are objected to.

9)☐ Claim(s) _____ are subject to restriction and/or election requirement.

* If any claims have been determined allowable, you may be eligible to benefit from the **Patent Prosecution Highway** program at a participating intellectual property office for the corresponding application. For more information, please see http://www.uspto.gov/patents/init_events/pph/index.jsp or send an inquiry to PPHfeedback@uspto.gov.

Application Papers

10)☐ The specification is objected to by the Examiner.

11)☒ The drawing(s) filed on *7/22/14* is/are: a)☐ accepted or b)☐ objected to by the Examiner.

Applicant may not request that any objection to the drawing(s) be held in abeyance. See 37 CFR 1.85(a).

Replacement drawing sheet(s) including the correction is required if the drawing(s) is objected to. See 37 CFR 1.121(d).

Priority under 35 U.S.C. § 119

12)☐ Acknowledgment is made of a claim for foreign priority under 35 U.S.C. § 119(a)-(d) or (f).

Certified copies:

a)☐ All b)☐ Some** c)☐ None of the:

1.☐ Certified copies of the priority documents have been received.

2.☐ Certified copies of the priority documents have been received in Application No. _____.

3.☐ Copies of the certified copies of the priority documents have been received in this National Stage application from the International Bureau (PCT Rule 17.2(a)).

** See the attached detailed Office action for a list of the certified copies not received.

Attachment(s)

1) ☐ Notice of References Cited (PTO-892)

2) ☒ Information Disclosure Statement(s) (PTO/SB/08a and/or PTO/SB/08b) Paper No(s)/Mail Date *10/22/14*.

3) ☐ Interview Summary (PTO-413) Paper No(s)/Mail Date. _____ .

4) ☐ Other: _____.

DETAILED ACTION

Double Patenting

1. The nonstatutory double patenting rejection is based on a judicially created doctrine grounded in public policy (a policy reflected in the statute) so as to prevent the unjustified or improper timewise extension of the "right to exclude" granted by a patent and to prevent possible harassment by multiple assignees. A nonstatutory obviousness-type double patenting rejection is appropriate where the conflicting claims are not identical, but at least one examined application claim is not patentably distinct from the reference claim(s) because the examined application claim is either anticipated by, or would have been obvious over, the reference claim(s). See, e.g., *In re Berg*, 140 F.3d 1428, 46 USPQ2d 1226 (Fed. Cir. 1998); *In re Goodman*, 11 F.3d 1046, 29 USPQ2d 2010 (Fed. Cir. 1993); *In re Longi*, 759 F.2d 887, 225 USPQ 645 (Fed. Cir. 1985); *In re Van Ornum*, 686 F.2d 937, 214 USPQ 761 (CCPA 1982); *In re Vogel*, 422 F.2d 438, 164 USPQ 619 (CCPA 1970); and *In re Thorington*, 418 F.2d 528, 163 USPQ 644 (CCPA 1969).

A timely filed terminal disclaimer in compliance with 37 CFR 1.321(c) or 1.321(d) may be used to overcome an actual or provisional rejection based on a nonstatutory double patenting ground provided the conflicting application or patent either is shown to be commonly owned with this application, or claims an invention made as a result of activities undertaken within the scope of a joint research agreement.

Effective January 1, 1994, a registered attorney or agent of record may sign a terminal disclaimer. A terminal disclaimer signed by the assignee must fully comply with 37 CFR 3.73(b).

2. **Claim 1** is rejected on the ground of nonstatutory obviousness-type double patenting as being unpatentable over claim 1 of U.S. Patent No. 8,799,468.

14/338240 (Instant Application)	US 8,799,468 (Patented Application)
1. A system for regulating access to a service provider network, the system comprising:	A system for regulating access to a service provider network, the system comprising:
a controller node coupled to the service provider network, the controller node comprising:	a controller node coupled to the service provider network, the controller node comprising:
a first processor to generate controller instructions, and first one or more network interfaces to transmit the controller instructions over the service provider network to a plurality of network elements;	a first processor configured to generate controller instructions, and a first network interface configured to transmit the controller instructions over the service provider network to a plurality of gateway units;

and the plurality of network elements, each of the plurality of network elements comprising:	and the plurality of gateway units, each of the plurality of gateway units comprising:
second one or more network interfaces coupled to the service provider network to receive the controller instructions from the controller node through the service provider network;	a user interface configured to receive user-entered content requests for the service provider network; a second network interface coupled to the service provider network and configured to receive the controller instructions from the controller node through the service provider network;
and at least a second processor coupled to the second one or more network interfaces, wherein the second processor is to selectively transmit content requests to the service provider network in accordance with the controller instructions,	and a second processor coupled to the user interface and the second network interface, wherein the second processor is configured to selectively transmit the content requests to the service provider network in accordance with the controller instructions,
and transfer received content data responsive to the transmitted content	and transfer received content data responsive to the transmitted content

requests from the service provider network via the second one or more network interfaces.	requests from the service provider network via the second network interface.

3. Although the conflicting claims are not identical, they are not patentably distinct from each other because they recite similar limitations in different form and therefore are obvious variants of each other.

Conclusion

Any inquiry concerning this communication or earlier communications from the examiner should be directed to SHRIPAL KHAJURIA whose telephone number is (571)270-5662. The examiner can normally be reached on Monday - Friday, 10:00AM-6:30PM EST.

If attempts to reach the examiner by telephone are unsuccessful, the examiner's supervisor, Derrick Ferris can be reached on (571)272-3123. The fax phone number for the organization where this application or proceeding is assigned is 571-273-8300.

Information regarding the status of an application may be obtained from the Patent Application Information Retrieval (PAIR) system. Status information for published applications may be obtained from either Private PAIR or Public PAIR. Status information for unpublished applications is available through Private PAIR only. For more information about the PAIR system, see http://pair-direct.uspto.gov. Should you have questions on access to the Private PAIR system, contact the Electronic Business Center (EBC) at 866-217-9197 (toll-free). If you would like assistance from a USPTO Customer Service Representative or access to the automated information system, call 800-786-9199 (IN USA OR CANADA) or 571-272-1000.

/SHRIPAL KHAJURIA/
Primary Examiner, Art Unit 2478
***

Search Notes	Application/Control No.	Applicant(s)/Patent Under Reexamination
	14338240	BURKE ET AL.
	Examiner	Art Unit
	SHRIPAL KHAJURIA	2478

CPC- SEARCHED		
Symbol	Date	Examiner
H04163/10	12/14/2015	skk

CPC COMBINATION SETS - SEARCHED		
Symbol	Date	Examiner

US CLASSIFICATION SEARCHED			
Class	Subclass	Date	Examiner
709	225	12/14/2015	skk

SEARCH NOTES		
Search Notes	Date	Examiner
Text search of East (USPat, USPG_Pub, JPO, EPO, Derwent, IBM_TDB) and Inventor search	12/14/2015	skk

INTERFERENCE SEARCH			
US Class/ CPC Symbol	US Subclass / CPC Group	Date	Examiner

Index of Claims	Application/Control No.	Applicant(s)/Patent Under Reexamination
	14338240	BURKE ET AL.
	Examiner	**Art Unit**
	SHRIPAL KHAJURIA	2478

✓	Rejected	-	Cancelled	N	Non-Elected	A	Appeal
=	Allowed	÷	Restricted	I	Interference	O	Objected

☐ Claims renumbered in the same order as presented by applicant ☐ CPA ☐ T.D. ☐ R.1.47

CLAIM		DATE								
Final	Original	12/14/2015								
	1	✓								
	2	✓								
	3	✓								
	4	✓								
	5	✓								
	6	✓								
	7	✓								
	8	✓								
	9	✓								
	10	✓								
	11	✓								
	12	✓								
	13	✓								
	14	✓								
	15	✓								
	16	✓								
	17	✓								
	18	✓								
	19	✓								
	20	✓								
	21	✓								
	22	✓								
	23	✓								
	24	✓								
	25	✓								
	26	✓								
	27	✓								
	28	✓								
	29	✓								
	30	✓								
	31	✓								
	32	✓								
	33	✓								
	34	✓								
	35	✓								
	36	✓								

Index of Claims	Application/Control No.	Applicant(s)/Patent Under Reexamination
	14338240	BURKE ET AL.
	Examiner	**Art Unit**
	SHRIPAL KHAJURIA	2478

✓	Rejected	-	Cancelled	N	Non-Elected	A	Appeal
=	Allowed	÷	Restricted	I	Interference	O	Objected

☐ Claims renumbered in the same order as presented by applicant ☐ CPA ☐ T.D. ☐ R.1.47

CLAIM		DATE								
Final	Original	12/14/2015								
	37	✓								
	38	✓								
	39	✓								
	40	✓								
	41	✓								
	42	✓								
	43	✓								
	44	✓								
	45	✓								
	46	✓								
	47	✓								
	48	✓								

INFORMATION DISCLOSURE STATEMENT BY APPLICANT (**Not for submission under 37 CFR 1.99)**	Application Number	14338240
	Filing Date	2014-07-22
	First Named Inventor	Robert M. Burke II
	Art Unit	N/A
	Examiner Name	Not Yet Assigned
	Attorney Docket Number	123205-198706

U.S.PATENTS						Remove
Examiner Initial*	Cite No	Patent Number	Kind Code[1]	Issue Date	Name of Patentee or Applicant of cited Document	Pages,Columns,Lines where Relevant Passages or Relevant Figures Appear
	1	6516416		2003-02-04	Gregg et al.	
	2	6694429		2004-02-17	Kalmanek, Jr. et al.	
If you wish to add additional U.S. Patent citation information please click the Add button.						Add

U.S.PATENT APPLICATION PUBLICATIONS						Remove
Examiner Initial*	Cite No	Publication Number	Kind Code[1]	Publication Date	Name of Patentee or Applicant of cited Document	Pages,Columns,Lines where Relevant Passages or Relevant Figures Appear
	1	20010051996		2001-12-13	Cooper et al.	
	2	20020059440		2002-05-16	Hudson et al.	
	3	20020103778		2002-08-01	Saxena	
	4	20020120577		2002-08-29	Hans et al.	

ALL REFERENCES CONSIDERED EXCEPT WHERE LINED THROUGH. /S.K./

Receipt date: 10/22/2014	Application Number	14338240	14338240 - GAU: 2478
INFORMATION DISCLOSURE STATEMENT BY APPLICANT (**Not for submission under 37 CFR 1.99)**	Filing Date	2014-07-22	
	First Named Inventor	Robert M. Burke II	
	Art Unit	N/A	
	Examiner Name	Not Yet Assigned	
	Attorney Docket Number	123205-198706	

	5	20020145981		2002-10-10	Klinker et al.	
	6	20020169865		2002-11-14	Tamoff	
	7	20030204602		2003-10-30	Hudson et al.	
	8	20030233281		2003-12-18	Takeuchi et al.	
	9	20050033990		2005-02-10	Harvey et al.	

If you wish to add additional U.S. Published Application citation information please click the Add button. Add

FOREIGN PATENT DOCUMENTS Remove

Examiner Initial*	Cite No	Foreign Document Number[3]	Country Code[2] i	Kind Code[4]	Publication Date	Name of Patentee or Applicant of cited Document	Pages,Columns,Lines where Relevant Passages or Relevant Figures Appear	T[5]
	1							☐

If you wish to add additional Foreign Patent Document citation information please click the Add button Add

NON-PATENT LITERATURE DOCUMENTS Remove

Examiner Initials*	Cite No	Include name of the author (in CAPITAL LETTERS), title of the article (when appropriate), title of the item (book, magazine, journal, serial, symposium, catalog, etc), date, pages(s), volume-issue number(s), publisher, city and/or country where published.	T[5]
	1		☐

If you wish to add additional non-patent literature document citation information please click the Add button Add

ALL REFERENCES CONSIDERED EXCEPT WHERE LINED THROUGH. /S.K./

Receipt date: 10/22/2014	Application Number	14338240 14338240 - GAU: 2478
INFORMATION DISCLOSURE STATEMENT BY APPLICANT (**Not for submission under 37 CFR 1.99)**	Filing Date	2014-07-22
	First Named Inventor	Robert M. Burke II
	Art Unit	N/A
	Examiner Name	Not Yet Assigned
	Attorney Docket Number	123205-198706

EXAMINER SIGNATURE			
Examiner Signature	/Shripal Khajuria/	Date Considered	12/14/2015

*EXAMINER: Initial if reference considered, whether or not citation is in conformance with MPEP 609. Draw line through a citation if not in conformance and not considered. Include copy of this form with next communication to applicant.

[1] See Kind Codes of USPTO Patent Documents at www.USPTO.GOV or MPEP 901.04. [2] Enter office that issued the document, by the two-letter code (WIPO Standard ST.3). [3] For Japanese patent documents, the indication of the year of the reign of the Emperor must precede the serial number of the patent document. [4] Kind of document by the appropriate symbols as indicated on the document under WIPO Standard ST.16 if possible. [5] Applicant is to place a check mark here if English language translation is attached.

ALL REFERENCES CONSIDERED EXCEPT WHERE LINED THROUGH. /S.K./

UNITED STATES PATENT AND TRADEMARK OFFICE

UNITED STATES DEPARTMENT OF COMMERCE
United States Patent and Trademark Office
Address: COMMISSIONER FOR PATENTS
P.O. Box 1450
Alexandria, Virginia 22313-1450
www.uspto.gov

BIB DATA SHEET

CONFIRMATION NO. 7564

SERIAL NUMBER	FILING or 371(c) DATE	CLASS	GROUP ART UNIT	ATTORNEY DOCKET NO.
14/338,240	07/22/2014 RULE	709	2478	123205-198706

APPLICANTS

INVENTORS

Robert M. Burke II, Los Gatos, CA;
David Z. Carman, Tulsa, OK;

**** CONTINUING DATA ***************************

This application is a CON of 13/369,174 02/08/2012 PAT 8799468
which is a CON of 10/989,023 11/16/2004 PAT 8122128
which claims benefit of 60/563,064 04/16/2004
and claims benefit of 60/538,370 01/22/2004
and claims benefit of 60/523,057 11/18/2003

**** FOREIGN APPLICATIONS ***************************

**** IF REQUIRED, FOREIGN FILING LICENSE GRANTED **** ** SMALL ENTITY **
08/04/2014

Foreign Priority claimed	☐ Yes ☑ No	☐ Met after Allowance	STATE OR COUNTRY	SHEETS DRAWINGS	TOTAL CLAIMS	INDEPENDENT CLAIMS
35 USC 119(a-d) conditions met	☐ Yes ☑ No		CA	7	48	2
Verified and Acknowledged	/SHRIPAL K KHAJURIA/ Examiner's Signature	Initials				

ADDRESS

SCHWABE, WILLIAMSON & WYATT, P.C.
1420 FIFTH AVENUE, SUITE 3400
SEATTLE, WA 98101-4010
UNITED STATES

TITLE

SYSTEM FOR REGULATING ACCESS TO AND DISTRIBUTING CONTENT IN A NETWORK

FILING FEE RECEIVED		
1920	FEES: Authority has been given in Paper No._____ to charge/credit DEPOSIT ACCOUNT No._____ for following:	☐ All Fees ☐ 1.16 Fees (Filing) ☐ 1.17 Fees (Processing Ext. of time) ☐ 1.18 Fees (Issue) ☐ Other _____ ☐ Credit

EAST Search History

EAST Search History (Prior Art)

Ref #	Hits	Search Query	DBs	Default Operator	Plurals	Time Stamp
L1	7758	burke.in.	US-PGPUB; USPAT; USOCR	OR	OFF	2015/12/14 11:33
L2	824	carman.in.	US-PGPUB; USPAT; USOCR	OR	OFF	2015/12/14 11:33
L3	5	(L1 L2) and (regulating same node same network same processor).clm.	US-PGPUB; USPAT; USOCR	OR	OFF	2015/12/14 11:33
S1	5488	burke.in.	US-PGPUB; USPAT; USOCR	OR	OFF	2009/04/27 11:58
S2	585	carman.in.	US-PGPUB; USPAT; USOCR	OR	OFF	2009/04/27 11:58
S3	1	(S1 S2) and (regulating same node same network same processor).clm.	US-PGPUB; USPAT; USOCR	OR	OFF	2009/04/27 11:59
S4	3886	(709/225).CCLS.	US-PGPUB; USPAT; USOCR	OR	OFF	2009/04/27 12:11
S5	0	network same parition$3 and user near (portion or part)	US-PGPUB; USPAT; USOCR	OR	OFF	2009/10/23 14:15
S6	0	network same paritition$3 and user near (portion or part)	US-PGPUB; USPAT; USOCR	OR	OFF	2009/10/23 14:15
S7	709	network same partition$3 and user near (portion or part)	US-PGPUB; USPAT; USOCR	OR	OFF	2009/10/23 14:15
S8	7462681	network same partition$3 and user near (portion or part) and network (part or portion)	US-PGPUB; USPAT; USOCR	OR	OFF	2009/10/23 14:15
S9	119	network same partition$3 and user near (portion or part) and network near (part or portion)	US-PGPUB; USPAT; USOCR	OR	OFF	2009/10/23 14:16

S10	6	network same partition$3 and user near (portion or part) same network near (part or portion)	US-PGPUB; USPAT; USOCR	OR	OFF	2009/10/23 14:18
S11	9	("6516416" "20010051996" "20020169865" "20020120577" "6694429" "20020059440" "20020145981" "20030204602" "20030233281").pn.	US-PGPUB; USPAT; USOCR	OR	OFF	2009/10/23 14:21
S12	11	predetermined near website same list	US-PGPUB; USPAT; USOCR	OR	OFF	2009/10/23 14:51
S13	9	predetermined near websites same list	US-PGPUB; USPAT; USOCR	OR	OFF	2009/10/23 14:52
S14	4	predetermined near websites and weight same website	US-PGPUB; USPAT; USOCR	OR	OFF	2009/10/23 15:01
S15	16	predetermined near sites and weight same site and network and internet	US-PGPUB; USPAT; USOCR	OR	OFF	2009/10/23 15:04
S16	20	predetermined near web and weight same web and network and internet	US-PGPUB; USPAT; USOCR	OR	OFF	2009/10/23 15:06
S17	0	gateway and storage and autheticator	US-PGPUB; USPAT; USOCR	OR	OFF	2009/10/23 16:22
S18	836	gateway and storage and authenticator	US-PGPUB; USPAT; USOCR	OR	OFF	2009/10/23 16:22
S19	125	gateway and storage and pay near3 pay near3 view	US-PGPUB; USPAT; USOCR	OR	OFF	2009/10/23 16:23
S20	73	gateway and storage and pay near3 pay near3 view and modes	US-PGPUB; USPAT; USOCR	OR	OFF	2009/10/23 16:24
S21	73	gateway and storage and pay near3 pay near3 view and modes and display	US-PGPUB; USPAT; USOCR	OR	OFF	2009/10/23 16:24
S22	1	"20050033990".pn.	US-PGPUB; USPAT; USOCR	OR	OFF	2009/10/23 16:25
S23	1	"6516416".pn.	US-PGPUB; USPAT; USOCR	OR	OFF	2010/08/13 16:38
S24	5893	burke.in.	US-PGPUB;	OR	OFF	2010/08/13 17:16

			USPAT; USOCR			
S25	626	carman.in.	US-PGPUB; USPAT; USOCR	OR	OFF	2010/08/13 17:16
S26	1	(S24 S25) and (regulating same node same network same processor).clm.	US-PGPUB; USPAT; USOCR	OR	OFF	2010/08/13 17:16
S27	4846	(709/225).CCLS.	US-PGPUB; USPAT; USOCR	OR	OFF	2010/08/13 17:16
S28	1	"20020120577".pn.	US-PGPUB; USPAT; USOCR	OR	OFF	2010/08/13 17:16
S29	136	network same partition$3 and user near (portion or part) and network near (part or portion)	US-PGPUB; USPAT; USOCR	OR	OFF	2010/08/13 18:23
S30	6	network same partition$3 and user near (portion or part) same network near (part or portion)	US-PGPUB; USPAT; USOCR	OR	OFF	2010/08/13 18:23
S31	6107	burke.in.	US-PGPUB; USPAT; USOCR	OR	OFF	2011/04/07 20:12
S32	651	carman.in.	US-PGPUB; USPAT; USOCR	OR	OFF	2011/04/07 20:12
S33	1	(S31 S32) and (regulating same node same network same processor).clm.	US-PGPUB; USPAT; USOCR	OR	OFF	2011/04/07 20:12
S34	5364	(709/225).CCLS.	US-PGPUB; USPAT; USOCR	OR	OFF	2011/04/07 20:12
S35	1	"6516416".pn.	US-PGPUB; USPAT; USOCR	OR	OFF	2011/04/07 20:46
S36	6258	burke.in.	US-PGPUB; USPAT; USOCR	OR	OFF	2011/09/30 16:52
S37	668	carman.in.	US-PGPUB; USPAT; USOCR	OR	OFF	2011/09/30 16:52
S38	1	(S36 S37) and (regulating same node same network same processor).clm.	US-PGPUB; USPAT; USOCR	OR	OFF	2011/09/30 16:52

S39	5816	(709/225).CCLS.	US-PGPUB; USPAT; USOCR	OR	OFF	2011/09/30 16:52
S40	175	network same partition$3 and user near (portion or part) and network near (part or portion)	US-PGPUB; USPAT; USOCR	OR	OFF	2011/09/30 17:02
S41	6	predetermined near websites and weight same website	US-PGPUB; USPAT; USOCR	OR	OFF	2011/09/30 17:02
S42	85	gateway and storage and pay near3 pay near3 view and modes and display	US-PGPUB; USPAT; USOCR	OR	OFF	2011/09/30 17:02
S43	0	("L8" "L9") and (regulating same node same network same processor).clm.	US-PGPUB; USPAT; USOCR	OR	OFF	2011/09/30 17:03
S51	7053	burke.in.	US-PGPUB; USPAT; USOCR	OR	OFF	2014/01/10 18:29
S52	767	carman.in.	US-PGPUB; USPAT; USOCR	OR	OFF	2014/01/10 18:29
S53	1	(S51 S52) and (controller same provider same interface same entered).clm.	US-PGPUB; USPAT; USOCR	OR	OFF	2014/01/10 18:29
S54	4816	h04l63/10.cpc.	US-PGPUB; USPAT; USOCR	OR	OFF	2014/01/10 18:31
S55	2614	h04l2463/101.cpc.	US-PGPUB; USPAT; USOCR	OR	OFF	2014/01/10 18:31
S56	8072	(709/225).CCLS.	US-PGPUB; USPAT; USOCR	OR	OFF	2014/01/10 18:32
S57	7208	burke.in.	US-PGPUB; USPAT; USOCR	OR	OFF	2014/05/22 15:00
S58	779	carman.in.	US-PGPUB; USPAT; USOCR	OR	OFF	2014/05/22 15:00
S59	3	(S57 S58) and (regulating same node same network same processor).clm.	US-PGPUB; USPAT; USOCR	OR	OFF	2014/05/22 15:00
S60	8445	(709/225).CCLS.	US-PGPUB; USPAT;	OR	OFF	2014/05/22 15:00

			USOCR			
S61	9	network same partition$3 and user near (portion or part) same network near (part or portion)	US-PGPUB; USPAT; USOCR	OR	OFF	2014/05/22 15:00
S62	10	predetermined near websites and weight same website	US-PGPUB; USPAT; USOCR	OR	OFF	2014/05/22 15:00

EAST Search History (Interference)

Ref #	Hits	Search Query	DBs	Default Operator	Plurals	Time Stamp
S44	5169	burke.in.	US-PGPUB; USPAT; * No UPAD	OR	OFF	2011/09/30 17:02
S45	535	carman.in.	US-PGPUB; USPAT; * No UPAD	OR	OFF	2011/09/30 17:02
S46	0	("L8" "L9") and (regulating same node same network same processor).clm.	US-PGPUB; USPAT; * No UPAD	OR	OFF	2011/09/30 17:03
S47	6	predetermined near websites and weight same website	US-PGPUB; USPAT; * No UPAD	OR	OFF	2011/09/30 17:03
S48	181	network same partition$3 and user near (portion or part) and network near (part or portion)	US-PGPUB; USPAT; * No UPAD	OR	OFF	2011/09/30 17:03
S49	85	gateway and storage and pay near3 pay near3 view and modes and display	US-PGPUB; USPAT; * No UPAD	OR	OFF	2011/09/30 17:03
S50	28	predetermined near web and weight same web and network and internet	US-PGPUB; USPAT; * No UPAD	OR	OFF	2011/09/30 17:04
S63	6112	burke.in.	US-PGPUB; USPAT; * No UPAD	OR	OFF	2014/05/22 14:59
S64	646	carman.in.	US-PGPUB; USPAT; * No UPAD	OR	OFF	2014/05/22 14:59
S65	0	("L8" "L9") and (regulating same node same network same processor).clm.	US-PGPUB; USPAT; * No UPAD	OR	OFF	2014/05/22 14:59
S66	10	predetermined near websites and weight same website	US-PGPUB; USPAT; * No UPAD	OR	OFF	2014/05/22 14:59
S67	397	network same partition$3 and user near (portion or part) and network near (part or portion)	US-PGPUB; USPAT; * No UPAD	OR	OFF	2014/05/22 14:59
S68	103	gateway and storage and pay near3 pay near3 view and modes and display	US-PGPUB; USPAT; * No UPAD	OR	OFF	2014/05/22 14:59
S69	45	predetermined near web and weight same web and network and internet	US-PGPUB; USPAT; * No UPAD	OR	OFF	2014/05/22 14:59
S70	37	predetermined near sites and weight	US-PGPUB;	OR	OFF	2014/05/22

		same site and network and internet	USPAT; * No UPAD			15:00

12/ 14/ 2015 11:53:31 AM
C:\ Users\ skhajuria\ Documents\ EAST\ Workspaces\ 14338240.wsp

Doc Code: DIST.E.FILE **Document Description: Electronic Terminal Disclaimer - Filed**	PTO/SB/26 U.S. Patent and Trademark Office Department of Commerce

Electronic Petition Request	**TERMINAL DISCLAIMER TO OBVIATE A DOUBLE PATENTING REJECTION OVER A "PRIOR" PATENT**
Application Number	14338240
Filing Date	22-Jul-2014
First Named Inventor	Robert Burke
Attorney Docket Number	123205-198706
Title of Invention	SYSTEM FOR REGULATING ACCESS TO AND DISTRIBUTING CONTENT IN A NETWORK

☒ Filing of terminal disclaimer does not obviate requirement for response under 37 CFR 1.111 to outstanding Office Action

☒ This electronic Terminal Disclaimer is not being used for a Joint Research Agreement.

Owner	Percent Interest
David Z. Carman	100%
Robert M. Burke II	100%

The owner(s) with percent interest listed above in the instant application hereby disclaims, except as provided below, the terminal part of the statutory term of any patent granted on the instant application which would extend beyond the expiration date of the full statutory term of prior patent number(s)

8799468

as the term of said prior patent is presently shortened by any terminal disclaimer. The owner hereby agrees that any patent so granted on the instant application shall be enforceable only for and during such period that it and the prior patent are commonly owned. This agreement runs with any patent granted on the instant application and is binding upon the grantee, its successors or assigns.

In making the above disclaimer, the owner does not disclaim the terminal part of the term of any patent granted on the instant application that would extend to the expiration date of the full statutory term of the prior patent, "as the term of said prior patent is presently shortened by any terminal disclaimer," in the event that said prior patent later:
- expires for failure to pay a maintenance fee;
- is held unenforceable;
- is found invalid by a court of competent jurisdiction;
- is statutorily disclaimed in whole or terminally disclaimed under 37 CFR 1.321;
- has all claims canceled by a reexamination certificate;
- is reissued; or
- is in any manner terminated prior to the expiration of its full statutory term as presently shortened by any terminal disclaimer.

(●) Terminal disclaimer fee under 37 CFR 1.20(d) is included with Electronic Terminal Disclaimer request.

( ) I certify, in accordance with 37 CFR 1.4(d)(4), that the terminal disclaimer fee under 37 CFR 1.20(d) required for this terminal disclaimer has already been paid in the above-identified application.

Applicant claims the following fee status:

(●) Small Entity

( ) Micro Entity

( ) Regular Undiscounted

I hereby declare that all statements made herein of my own knowledge are true and that all statements made on information and belief are believed to be true; and further that these statements were made with the knowledge that willful false statements and the like so made are punishable by fine or imprisonment, or both, under Section 1001 of Title 18 of the United States Code and that such willful false statements may jeopardize the validity of the application or any patent issued thereon.

THIS PORTION MUST BE COMPLETED BY THE SIGNATORY OR SIGNATORIES

I certify, in accordance with 37 CFR 1.4(d)(4) that I am:

(●) An attorney or agent registered to practice before the Patent and Trademark Office who is of record in this application

Registration Number 35432

( ) A sole inventor

( ) A joint inventor; I certify that I am authorized to sign this submission on behalf of all of the inventors as evidenced by the power of attorney in the application

( ) A joint inventor; all of whom are signing this request

Signature	/Al AuYeung/
Name	Al AuYeung

*Statement under 37 CFR 3.73(b) is required if terminal disclaimer is signed by the assignee (owner).
Form PTO/SB/96 may be used for making this certification. See MPEP § 324.

Electronic Patent Application Fee Transmittal

Application Number:	14338240
Filing Date:	22-Jul-2014
Title of Invention:	SYSTEM FOR REGULATING ACCESS TO AND DISTRIBUTING CONTENT IN A NETWORK
First Named Inventor/Applicant Name:	Robert M. Burke
Filer:	Aloysius T.C. Auyeung/Ashley Donnell
Attorney Docket Number:	123205-198706

Filed as Small Entity

Filing Fees for Utility under 35 USC 111(a)

Description	Fee Code	Quantity	Amount	Sub-Total in USD($)
Basic Filing:				
Statutory or Terminal Disclaimer	2814	1	160	160
Pages:				
Claims:				
Miscellaneous-Filing:				
Petition:				
Patent-Appeals-and-Interference:				
Post-Allowance-and-Post-Issuance:				

Description	Fee Code	Quantity	Amount	Sub-Total in USD($)
Extension-of-Time:				
Miscellaneous:				
			Total in USD ($)	**160**

Doc Code: DISQ.E.FILE
Document Description: Electronic Terminal Disclaimer – Approved

Application No.: 14338240

Filing Date: 22-Jul-2014

Applicant/Patent under Reexamination: Burke et al.

Electronic Terminal Disclaimer filed on March 14, 2016

☒ APPROVED

This patent is subject to a terminal disclaimer

☐ DISAPPROVED

Approved/Disapproved by: Electronic Terminal Disclaimer automatically approved by EFS-Web

U.S. Patent and Trademark Office

Electronic Acknowledgement Receipt

EFS ID:	25184334
Application Number:	14338240
International Application Number:	
Confirmation Number:	7564
Title of Invention:	SYSTEM FOR REGULATING ACCESS TO AND DISTRIBUTING CONTENT IN A NETWORK
First Named Inventor/Applicant Name:	Robert M. Burke
Customer Number:	60172
Filer:	Aloysius T.C. Auyeung/Ashley Donnell
Filer Authorized By:	Aloysius T.C. Auyeung
Attorney Docket Number:	123205-198706
Receipt Date:	14-MAR-2016
Filing Date:	22-JUL-2014
Time Stamp:	14:32:09
Application Type:	Utility under 35 USC 111(a)

Payment information:

Submitted with Payment	yes
Payment Type	Deposit Account
Payment was successfully received in RAM	$160
RAM confirmation Number	781
Deposit Account	500393
Authorized User	DONNELL, ASHLEY A.

The Director of the USPTO is hereby authorized to charge indicated fees and credit any overpayment as follows:

Charge any Additional Fees required under 37 CFR 1.16 (National application filing, search, and examination fees)

Charge any Additional Fees required under 37 CFR 1.17 (Patent application and reexamination processing fees)

Charge any Additional Fees required under 37 CFR 1.19 (Document supply fees)

Charge any Additional Fees required under 37 CFR 1.21 (Miscellaneous fees and charges)

File Listing:

Document Number	Document Description	File Name	File Size(Bytes)/ Message Digest	Multi Part /.zip	Pages (if appl.)
1	Electronic Terminal Disclaimer-Filed	eTerminal-Disclaimer.pdf	34749 83ab273f56cc4473aca089f64cdf4799540f8f26	no	3
Warnings:					
Information:					
2	Fee Worksheet (SB06)	fee-info.pdf	30781 e488ecef4bf70046d1a831d3f4f32da0c41a3a11	no	2
Warnings:					
Information:					
		Total Files Size (in bytes):	65530		

This Acknowledgement Receipt evidences receipt on the noted date by the USPTO of the indicated documents, characterized by the applicant, and including page counts, where applicable. It serves as evidence of receipt similar to a Post Card, as described in MPEP 503.

New Applications Under 35 U.S.C. 111
If a new application is being filed and the application includes the necessary components for a filing date (see 37 CFR 1.53(b)-(d) and MPEP 506), a Filing Receipt (37 CFR 1.54) will be issued in due course and the date shown on this Acknowledgement Receipt will establish the filing date of the application.

National Stage of an International Application under 35 U.S.C. 371
If a timely submission to enter the national stage of an international application is compliant with the conditions of 35 U.S.C. 371 and other applicable requirements a Form PCT/DO/EO/903 indicating acceptance of the application as a national stage submission under 35 U.S.C. 371 will be issued in addition to the Filing Receipt, in due course.

New International Application Filed with the USPTO as a Receiving Office
If a new international application is being filed and the international application includes the necessary components for an international filing date (see PCT Article 11 and MPEP 1810), a Notification of the International Application Number and of the International Filing Date (Form PCT/RO/105) will be issued in due course, subject to prescriptions concerning national security, and the date shown on this Acknowledgement Receipt will establish the international filing date of the application.

IN THE UNITED STATES PATENT AND TRADEMARK OFFICE

In re Continuation Application for: Burke et al. Application No.: 14/338,240 Filed: July 22, 2014 For: SYSTEM FOR REGULATING ACCESS TO AND DISTRIBUTING CONTENT IN A NETWORK	Examiner: Khajuria, Shripal K. Art Unit: 2478 Conf. #: 7564

Mail Stop Amendment
Commissioner for Patents
PO Box 1450
Alexandria, VA 22313-1450

AMENDMENT AND RESPONSE TO OFFICE ACTION

Commissioner for Patents:

In response to the Office Action dated December 21, 2015, please amend the application as follows:

Listing of Claims begins on page **2** of this paper.

Remarks/Arguments begin on page **12** of this paper.

LISTING OF CLAIMS

This listing of claims will replace all prior versions, and listings, of claims in the application:

1. (Previously presented) A system for regulating access to a service provider network, the system comprising:

a controller node coupled to the service provider network, the controller node comprising:

a first processor to generate controller instructions, and

first one or more network interfaces to transmit the controller instructions over the service provider network to a plurality of network elements; and

the plurality of network elements, each of the plurality of network elements comprising:

second one or more network interfaces coupled to the service provider network to receive the controller instructions from the controller node through the service provider network; and

at least a second processor coupled to the second one or more network interfaces, wherein the second processor is to selectively transmit content requests to the service provider network in accordance with the controller instructions, and transfer received content data responsive to the transmitted content requests from the service provider network via the second one or more network interfaces.

2. (Previously presented) The system of claim 1 wherein:

each of the network elements further comprises a storage device to store the controller instructions; and

each the network elements has an identifier that uniquely identifies the network element.

3 - 7 (Canceled)

DISH, Exh.1005, p.0178

8. (Previously presented) The system of claim 1, wherein the controller instructions include instructions to deny access to a first group of network servers of the service provider network.

9. (Previously presented) The system of claim 8, wherein the controller instructions comprise instructions to generate a notification to the controller node if a content request designates a network server of the service provider network.

10. (Previously presented) The system of claim 8, wherein the controller instructions are to further:

detect a content request that designates a first network server of the service provider network; and

re-direct the content request to a second network server of the service provider network.

11. (Previously presented) The system of claim 1, wherein:

the controller instructions include a file identifier; and

the controller instructions are to detect a file in a user file system in a network element that corresponds to the file identifier, and on detection, delete the file from a file system in the network element.

12. (Previously presented) The system of claim 11, wherein each of the network elements is operable between an active state and an inactive state, and wherein the controller instructions are to notify the controller node if a network element enters the inactive state.

13 - 16. (Canceled)

17. (Previously presented) The system of claim 1, wherein at least one the network elements comprises:

a housing to house at least the second one or more network interfaces, and the second processor; and

DISH, Exh.1005, p.0179

a detector to detect an attempt to open the housing;

wherein the controller instructions are to notify the controller node and prevent access to at least the storage device in response to a detection of an attempt to open the housing.

18 - 19. (Canceled)

20. (Previously presented) The system of claim 1, wherein the controller instructions are to place a network element in an operational mode on receipt of permission from the controller node.

21. (Previously presented) The system of claim 1, wherein the controller node further comprises a copyright registry to track copyright status of content data files distributed to the network element.

22. (Canceled)

23. (Previously presented) The system of claim 1, wherein the controller instructions include a pre-determined network site, and the controller instructions are to cause a network element to access the predetermined network site.

24 – 25. (Canceled)

26. (Previously presented) The system of claim 1, wherein the controller instructions are to enable a network element to:

receive initial operating parameters from the controller node via the second one or more network interfaces.

27. (Canceled)

28. (Previously presented) The system of claim 1, wherein:

DISH, Exh.1005, p.0180

the controller instructions are to enable each of the network elements to customize and transmit advertising received via the second one or more network interfaces to a user display via a gateway unit, the advertising being customized in accordance with information received via the second network interface .

29. (Previously presented) The system of claim 1, wherein the controller instructions are to enable each of the network elements to:

transmit pay-per-view advertising received from the service provider network via the second one or more network interfaces to a display unit via a gateway unit for selective display by a user; and

notify the controller node upon display of the advertising to enable payment credits be generated.

30. (Canceled)

31. (Previously presented) The system of claim 1, wherein the controller instructions are to further enable a network element to receive additional software via the second one or more network interfaces for execution on the second processor, the software enabling at least one of a fee-based network service, network video calling, or network gaming.

32. (Previously presented) The system of claim 1, wherein the controller instructions are to further enable a network element to detect a denial-of-service attack against the service provider network.

33. (Canceled)

34. (Previously presented) The system of claim 1, wherein the controller instructions are further to enable a network elements to selectively transmit to law enforcement terminals information describing at least one of incoming data and outgoing data of the network element.

DISH, Exh.1005, p.0181

35- 38 (Canceled)

39. (Previously presented) The system of claim 1, wherein the controller instructions are further to enable a network element to:

detect at least one of audio and video traffic flowing through the second network interface; and

selectively reduce the quality of service of the at least one of audio and video traffic, wherein reduction of quality of service comprises at least one of:

reducing a duty cycle, inserting TCP/IP messages in the at least one of audio and video traffic, inserting Nak/Ack pairs in the at least one of audio and video traffic, and inserting X-On/X-Off pairs in the at least one of audio and video traffic.

40. (Canceled)

41. (Previously presented) The system of claim 1, wherein each of the network elements further comprise at least one data storage unit having a network portion , and at least one of a first group of the network elements selectively shares data stored in the network partition with at least one of a second group of the network elements, via the second network interface, in accordance with the controller instructions provided to the first and second groups of the network elements.

42. (Previously presented) The system of claim 1, wherein the controller instructions are further to enable at least a first one of the network elements to selectively forward content data received from at least a second one of the network elements to at least a third one of the network elements.

43. (Previously presented) The system of claim 42 wherein the controller instructions are further to enable at least the third one of the network elements to:

receive portions of a content data file from other network elements; and

assemble the content data file based on the received portions for playing for a user associated with a gateway unit.

DISH, Exh.1005, p.0182

44. (Canceled)

45-115. (Canceled)

116. (Previously presented) A method for regulating access to a service provider network, the method comprising:

generating, by a controller node coupled to the service provider network, controller instructions;

transmitting the controller instructions, by the controller node, to a plurality of network elements of the service provider network;

receiving, by the network elements, content requests for the service provider network;

selectively transmitting, by the plurality of network elements, the content requests to the service provider network in accordance with the controller instructions; and

transferring, by the network elements,, received content data responsive to the transmitted content requests from the service provider network.

117. (Previously presented) The method of claim 116 further comprising storing the controller instructions, by the network element, in storage devices of the network elements, wherein each of the network elements has an identifier that uniquely identifies the network element.

118. (Previously presented) The method of claim 116, further comprising the network elements denying access to a first group of network servers of the service provider network, in accordance with the controller instructions.

119. (Previously presented) The method of claim 118, further comprising the network elements notifying the controller node if a content request designates a network server of the service provider network.

DISH, Exh.1005, p.0183

120. (Previously presented) The method of claim 118, further comprising the network elements detecting a content request that designates a first network server of the service provider network; and re-directing the content request to a second network server of the service provider network.

121. (Previously presented) The method of claim 116, wherein the controller instructions include a file identifier; and the method further comprises a network element detecting a file in a user file system associated with a network element or a gateway unit that corresponds to the file identifier, and on detection, deleting the file from the user file system.

122. (Previously presented) The method of claim 121, wherein each of the network elements is operable between an active state and an inactive state, and wherein the method further comprises a network element notifying the controller node if the network element enters the inactive state.

123. (Previously presented) The method of claim 116, further comprising a network element entering a user-controlled operational mode on receipt of permission from the controller node.

124. (Previously presented) The method of claim 116, further comprising the controller node tracking copyright status of content data files distributed to the network elements.

125. (Previously presented) The method of claim 116, wherein the controller instructions include a pre-determined network site, and the method further comprises a network element accessing the predetermined network site, in accordance with the controller instructions.

126. (Previously presented) The method of claim 116, further comprising a network element receiving initial operating parameters from the controller node.

DISH, Exh.1005, p.0184

127. (Previously presented) The method of claim 116, further comprising a network element customizing and transmitting advertising received to a user display associated with a gateway unit.

128. (Previously presented) The method of claim 116, further comprising a network element transmitting pay-per-view advertising received from the service provider network to a display unit associated with a gateway unit for selective display; and notifying the controller node upon displaying of the advertising to enable payment credits be generated.

129. (Previously presented) The method of claim 116, further comprising a network element receiving additional software for execution, the software enabling at least one of a fee-based network service, network video calling, and network gaming.

130. (Previously presented) The method of claim 116, further comprising a network element detecting a denial-of-service attack against the service provider network.

131. (Previously presented) The method of claim 116, further comprising a network element selectively transmitting to law enforcement terminals information describing at least one of incoming data and outgoing data of the network element.

132. (Previously presented) The method of claim 116, further comprising a network element detecting at least one of audio and video traffic; and selectively reducing the quality of service of the at least one of audio and video traffic in accordance with the controller instructions; wherein reduction of quality of service comprises at least one of:

reducing a duty cycle, inserting TCP/IP messages in the at least one of audio and video traffic, inserting Nak/Ack pairs in the at least one of audio and video traffic, and inserting X-On/X-Off pairs in the at least one of audio and video traffic.

DISH, Exh.1005, p.0185

133. (Previously presented) The method of claim 116, wherein each of the network elements further comprises a data storage unit having a network portion, and the method further comprises at least one of a first group of the network elements selectively sharing data stored in the network partition with at least one of a second group of the network elements, in accordance with the controller instructions provided to the first and second groups of the network elements.

134. (Previously presented) The method of claim 116, further comprising at least a first one of the network elements selectively forwarding content data received from at least a second one of the network elements to at least a third one of the network elements in accordance with the controller instructions.

135. (Previously presented) The method of claim 134 further comprising the third one of the network elements receiving portions of a content data file from a group of other network elements in accordance with the controller instructions; and assembling the content data file based on the received portions for transmission.

136. (Previously presented) The system of Claim 1 wherein the controller node is to control a plurality of subscribers' ability to access services, content and operation of the services via control of data flow through the plurality of network elements.

137. (Previously presented) The system of Claim 1 wherein the controller node is to deliver active and real time executed network management, distribute Previously presented database entries and software changes to a plurality of communication gateways via the plurality of network elements.

138. (Previously presented) The system of Claim 1 wherein the controller instructions include controller instructions to be distributed to a plurality of communication gateways via the plurality of network elements.

139. (Previously presented) The system of Claim 1 wherein the network

DISH, Exh.1005, p.0186

elements are members of a subscriber management system used to control access to the service provider network, to authenticate subscribers or devices before allowing access into the service provider network.

140. (Previously presented) The system of claim 1, wherein at least one of the network elements is a selected one of a DSLAM, a cable modem, a wireless modem , a multiplexing or channel service delivery system, or a satellite.

141. (Previously presented) The System of Claim 1 wherein network elements are to perform packet inspection to determine: file types , URL/IP addresses of content sources or destinations, or data patterns, in accordance with the controller instructions.

142. (Previously presented) The system of Claim 1 wherein the network elements are to further send a copy of data originated from or sent to content servers or gateways being wiretapped to law enforcement agencies, as directed by an active intervention system or controller.

DISH, Exh.1005, p.0187

REMARKS

Claims 1-2, 8-12, 17, 20, 21, 23, 26, 28, 29, 31, 32, 34, 39, 41-43 and 116 – 142 (to be renumbered claims 1-48) were pending, and rejected for double patenting under the judicially created doctrine, in view of USPA 8,799,468.

In response, Applicant has submitted a Terminal Disclaimer, overcoming the rejections. Accordingly, claims 1-2, 8-12, 17, 20, 21, 23, 26, 28, 29, 31, 32, 34, 39, 41-43 and 116 – 142 (to be renumbered claims 1-48) are now believed to be in condition of allowance. Early issuance of the Notice of Allowance is respectfully requested.

If the Examiner has any questions concerning the present paper, the Examiner is kindly requested to contact the undersigned at the direct number listed below.

For any shortage or excess of fees in connection with filing this paper, the Commissioner is authorized to charge or credit Deposit Account No. 500393.

Respectfully submitted,
Schwabe, Williamson & Wyatt, P.C.

Dated: March 14, 2016

/Al AuYeung/
Al AuYeung
Registration # 35,432
Direct: (206) 381-8819

DISH, Exh.1005, p.0188

Electronic Acknowledgement Receipt

EFS ID:	25188443
Application Number:	14338240
International Application Number:	
Confirmation Number:	7564
Title of Invention:	SYSTEM FOR REGULATING ACCESS TO AND DISTRIBUTING CONTENT IN A NETWORK
First Named Inventor/Applicant Name:	Robert M. Burke
Customer Number:	60172
Filer:	Aloysius T.C. Auyeung/Ashley Donnell
Filer Authorized By:	Aloysius T.C. Auyeung
Attorney Docket Number:	123205-198706
Receipt Date:	14-MAR-2016
Filing Date:	22-JUL-2014
Time Stamp:	16:12:28
Application Type:	Utility under 35 USC 111(a)

Payment information:

Submitted with Payment	no

File Listing:

Document Number	Document Description	File Name	File Size(Bytes)/ Message Digest	Multi Part /.zip	Pages (if appl.)
1		P001C2_RESPONSE.pdf	101053 3acdaf6aa6d32186cfcf9261efe673a4cfe30869	yes	12

	Multipart Description/PDF files in .zip description		
	Document Description	**Start**	**End**
	Amendment/Req. Reconsideration-After Non-Final Reject	1	1
	Claims	2	11
	Applicant Arguments/Remarks Made in an Amendment	12	12
Warnings:			
Information:			
	Total Files Size (in bytes):	101053	

This Acknowledgement Receipt evidences receipt on the noted date by the USPTO of the indicated documents, characterized by the applicant, and including page counts, where applicable. It serves as evidence of receipt similar to a Post Card, as described in MPEP 503.

New Applications Under 35 U.S.C. 111
If a new application is being filed and the application includes the necessary components for a filing date (see 37 CFR 1.53(b)-(d) and MPEP 506), a Filing Receipt (37 CFR 1.54) will be issued in due course and the date shown on this Acknowledgement Receipt will establish the filing date of the application.

National Stage of an International Application under 35 U.S.C. 371
If a timely submission to enter the national stage of an international application is compliant with the conditions of 35 U.S.C. 371 and other applicable requirements a Form PCT/DO/EO/903 indicating acceptance of the application as a national stage submission under 35 U.S.C. 371 will be issued in addition to the Filing Receipt, in due course.

New International Application Filed with the USPTO as a Receiving Office
If a new international application is being filed and the international application includes the necessary components for an international filing date (see PCT Article 11 and MPEP 1810), a Notification of the International Application Number and of the International Filing Date (Form PCT/RO/105) will be issued in due course, subject to prescriptions concerning national security, and the date shown on this Acknowledgement Receipt will establish the international filing date of the application.

UNITED STATES PATENT AND TRADEMARK OFFICE

UNITED STATES DEPARTMENT OF COMMERCE
United States Patent and Trademark Office
Address: COMMISSIONER FOR PATENTS
P.O. Box 1450
Alexandria, Virginia 22313-1450
www.uspto.gov

NOTICE OF ALLOWANCE AND FEE(S) DUE

60172 7590 06/07/2016

SCHWABE, WILLIAMSON & WYATT, P.C.
1420 FIFTH AVENUE, SUITE 3400
SEATTLE, WA 98101-4010

EXAMINER
KHAJURIA, SHRIPAL K

ART UNIT	PAPER NUMBER
2478	

DATE MAILED: 06/07/2016

APPLICATION NO.	FILING DATE	FIRST NAMED INVENTOR	ATTORNEY DOCKET NO.	CONFIRMATION NO.
14/338,240	07/22/2014	Robert M. Burke II	123205-198706	7564

TITLE OF INVENTION: SYSTEM FOR REGULATING ACCESS TO AND DISTRIBUTING CONTENT IN A NETWORK

APPLN. TYPE	ENTITY STATUS	ISSUE FEE DUE	PUBLICATION FEE DUE	PREV. PAID ISSUE FEE	TOTAL FEE(S) DUE	DATE DUE
nonprovisional	SMALL	$480	$0	$0	$480	09/07/2016

THE APPLICATION IDENTIFIED ABOVE HAS BEEN EXAMINED AND IS ALLOWED FOR ISSUANCE AS A PATENT. PROSECUTION ON THE MERITS IS CLOSED. THIS NOTICE OF ALLOWANCE IS NOT A GRANT OF PATENT RIGHTS. THIS APPLICATION IS SUBJECT TO WITHDRAWAL FROM ISSUE AT THE INITIATIVE OF THE OFFICE OR UPON PETITION BY THE APPLICANT. SEE 37 CFR 1.313 AND MPEP 1308.

THE ISSUE FEE AND PUBLICATION FEE (IF REQUIRED) MUST BE PAID WITHIN THREE MONTHS FROM THE MAILING DATE OF THIS NOTICE OR THIS APPLICATION SHALL BE REGARDED AS ABANDONED. THIS STATUTORY PERIOD CANNOT BE EXTENDED. SEE 35 U.S.C. 151. THE ISSUE FEE DUE INDICATED ABOVE DOES NOT REFLECT A CREDIT FOR ANY PREVIOUSLY PAID ISSUE FEE IN THIS APPLICATION. IF AN ISSUE FEE HAS PREVIOUSLY BEEN PAID IN THIS APPLICATION (AS SHOWN ABOVE), THE RETURN OF PART B OF THIS FORM WILL BE CONSIDERED A REQUEST TO REAPPLY THE PREVIOUSLY PAID ISSUE FEE TOWARD THE ISSUE FEE NOW DUE.

HOW TO REPLY TO THIS NOTICE:

I. Review the ENTITY STATUS shown above. If the ENTITY STATUS is shown as SMALL or MICRO, verify whether entitlement to that entity status still applies.

If the ENTITY STATUS is the same as shown above, pay the TOTAL FEE(S) DUE shown above.

If the ENTITY STATUS is changed from that shown above, on PART B - FEE(S) TRANSMITTAL, complete section number 5 titled "Change in Entity Status (from status indicated above)".

For purposes of this notice, small entity fees are 1/2 the amount of undiscounted fees, and micro entity fees are 1/2 the amount of small entity fees.

II. PART B - FEE(S) TRANSMITTAL, or its equivalent, must be completed and returned to the United States Patent and Trademark Office (USPTO) with your ISSUE FEE and PUBLICATION FEE (if required). If you are charging the fee(s) to your deposit account, section "4b" of Part B - Fee(s) Transmittal should be completed and an extra copy of the form should be submitted. If an equivalent of Part B is filed, a request to reapply a previously paid issue fee must be clearly made, and delays in processing may occur due to the difficulty in recognizing the paper as an equivalent of Part B.

III. All communications regarding this application must give the application number. Please direct all communications prior to issuance to Mail Stop ISSUE FEE unless advised to the contrary.

IMPORTANT REMINDER: Utility patents issuing on applications filed on or after Dec. 12, 1980 may require payment of maintenance fees. It is patentee's responsibility to ensure timely payment of maintenance fees when due.

DISH, Exh.1005, p.0191

PART B - FEE(S) TRANSMITTAL

Complete and send this form, together with applicable fee(s), to: Mail **Mail Stop ISSUE FEE**
Commissioner for Patents
P.O. Box 1450
Alexandria, Virginia 22313-1450
or Fax (571)-273-2885

INSTRUCTIONS: This form should be used for transmitting the ISSUE FEE and PUBLICATION FEE (if required). Blocks 1 through 5 should be completed where appropriate. All further correspondence including the Patent, advance orders and notification of maintenance fees will be mailed to the current correspondence address as indicated unless corrected below or directed otherwise in Block 1, by (a) specifying a new correspondence address; and/or (b) indicating a separate "FEE ADDRESS" for maintenance fee notifications.

CURRENT CORRESPONDENCE ADDRESS (Note: Use Block 1 for any change of address)

60172 7590 06/07/2016
SCHWABE, WILLIAMSON & WYATT, P.C.
1420 FIFTH AVENUE, SUITE 3400
SEATTLE, WA 98101-4010

Note: A certificate of mailing can only be used for domestic mailings of the Fee(s) Transmittal. This certificate cannot be used for any other accompanying papers. Each additional paper, such as an assignment or formal drawing, must have its own certificate of mailing or transmission.

Certificate of Mailing or Transmission
I hereby certify that this Fee(s) Transmittal is being deposited with the United States Postal Service with sufficient postage for first class mail in an envelope addressed to the Mail Stop ISSUE FEE address above, or being facsimile transmitted to the USPTO (571) 273-2885, on the date indicated below.

(Depositor's name)
(Signature)
(Date)

APPLICATION NO.	FILING DATE	FIRST NAMED INVENTOR	ATTORNEY DOCKET NO.	CONFIRMATION NO.
14/338,240	07/22/2014	Robert M. Burke II	123205-198706	7564

TITLE OF INVENTION: SYSTEM FOR REGULATING ACCESS TO AND DISTRIBUTING CONTENT IN A NETWORK

APPLN. TYPE	ENTITY STATUS	ISSUE FEE DUE	PUBLICATION FEE DUE	PREV. PAID ISSUE FEE	TOTAL FEE(S) DUE	DATE DUE
nonprovisional	SMALL	$480	$0	$0	$480	09/07/2016

EXAMINER	ART UNIT	CLASS-SUBCLASS
KHAJURIA, SHRIPAL K	2478	709-225000

1. Change of correspondence address or indication of "Fee Address" (37 CFR 1.363).
- ❑ Change of correspondence address (or Change of Correspondence Address form PTO/SB/122) attached.
- ❑ "Fee Address" indication (or "Fee Address" Indication form PTO/SB/47; Rev 03-02 or more recent) attached. **Use of a Customer Number is required.**

2. For printing on the patent front page, list
(1) The names of up to 3 registered patent attorneys or agents OR, alternatively,
(2) The name of a single firm (having as a member a registered attorney or agent) and the names of up to 2 registered patent attorneys or agents. If no name is listed, no name will be printed.
1 _____
2 _____
3 _____

3. ASSIGNEE NAME AND RESIDENCE DATA TO BE PRINTED ON THE PATENT (print or type)

PLEASE NOTE: Unless an assignee is identified below, no assignee data will appear on the patent. If an assignee is identified below, the document has been filed for recordation as set forth in 37 CFR 3.11. Completion of this form is NOT a substitute for filing an assignment.

(A) NAME OF ASSIGNEE (B) RESIDENCE: (CITY and STATE OR COUNTRY)

Please check the appropriate assignee category or categories (will not be printed on the patent) : ❑ Individual ❑ Corporation or other private group entity ❑ Government

4a. The following fee(s) are submitted:
- ❑ Issue Fee
- ❑ Publication Fee (No small entity discount permitted)
- ❑ Advance Order - # of Copies _____

4b. Payment of Fee(s): **(Please first reapply any previously paid issue fee shown above)**
- ❑ A check is enclosed.
- ❑ Payment by credit card. Form PTO-2038 is attached.
- ❑ The director is hereby authorized to charge the required fee(s), any deficiency, or credits any overpayment, to Deposit Account Number _____ (enclose an extra copy of this form).

5. **Change in Entity Status** (from status indicated above)
- ❑ Applicant certifying micro entity status. See 37 CFR 1.29 — NOTE: Absent a valid certification of Micro Entity Status (see forms PTO/SB/15A and 15B), issue fee payment in the micro entity amount will not be accepted at the risk of application abandonment.
- ❑ Applicant asserting small entity status. See 37 CFR 1.27 — NOTE: If the application was previously under micro entity status, checking this box will be taken to be a notification of loss of entitlement to micro entity status.
- ❑ Applicant changing to regular undiscounted fee status. — NOTE: Checking this box will be taken to be a notification of loss of entitlement to small or micro entity status, as applicable.

NOTE: This form must be signed in accordance with 37 CFR 1.31 and 1.33. See 37 CFR 1.4 for signature requirements and certifications.

Authorized Signature _____ Date _____

Typed or printed name _____ Registration No. _____

DISH, Exh.1005, p.0192

UNITED STATES PATENT AND TRADEMARK OFFICE

UNITED STATES DEPARTMENT OF COMMERCE
United States Patent and Trademark Office
Address: COMMISSIONER FOR PATENTS
P.O. Box 1450
Alexandria, Virginia 22313-1450
www.uspto.gov

APPLICATION NO.	FILING DATE	FIRST NAMED INVENTOR	ATTORNEY DOCKET NO.	CONFIRMATION NO.
14/338,240	07/22/2014	Robert M. Burke II	123205-198706	7564

60172 7590 06/07/2016

SCHWABE, WILLIAMSON & WYATT, P.C.
1420 FIFTH AVENUE, SUITE 3400
SEATTLE, WA 98101-4010

EXAMINER	
KHAJURIA, SHRIPAL K	

ART UNIT	PAPER NUMBER
2478	

DATE MAILED: 06/07/2016

Determination of Patent Term Adjustment under 35 U.S.C. 154 (b)
(Applications filed on or after May 29, 2000)

The Office has discontinued providing a Patent Term Adjustment (PTA) calculation with the Notice of Allowance.

Section 1(h)(2) of the AIA Technical Corrections Act amended 35 U.S.C. 154(b)(3)(B)(i) to eliminate the requirement that the Office provide a patent term adjustment determination with the notice of allowance. See Revisions to Patent Term Adjustment, 78 Fed. Reg. 19416, 19417 (Apr. 1, 2013). Therefore, the Office is no longer providing an initial patent term adjustment determination with the notice of allowance. The Office will continue to provide a patent term adjustment determination with the Issue Notification Letter that is mailed to applicant approximately three weeks prior to the issue date of the patent, and will include the patent term adjustment on the patent. Any request for reconsideration of the patent term adjustment determination (or reinstatement of patent term adjustment) should follow the process outlined in 37 CFR 1.705.

Any questions regarding the Patent Term Extension or Adjustment determination should be directed to the Office of Patent Legal Administration at (571)-272-7702. Questions relating to issue and publication fee payments should be directed to the Customer Service Center of the Office of Patent Publication at 1-(888)-786-0101 or (571)-272-4200.

DISH, Exh.1005, p.0193

OMB Clearance and PRA Burden Statement for PTOL-85 Part B

The Paperwork Reduction Act (PRA) of 1995 requires Federal agencies to obtain Office of Management and Budget approval before requesting most types of information from the public. When OMB approves an agency request to collect information from the public, OMB (i) provides a valid OMB Control Number and expiration date for the agency to display on the instrument that will be used to collect the information and (ii) requires the agency to inform the public about the OMB Control Number's legal significance in accordance with 5 CFR 1320.5(b).

The information collected by PTOL-85 Part B is required by 37 CFR 1.311. The information is required to obtain or retain a benefit by the public which is to file (and by the USPTO to process) an application. Confidentiality is governed by 35 U.S.C. 122 and 37 CFR 1.14. This collection is estimated to take 12 minutes to complete, including gathering, preparing, and submitting the completed application form to the USPTO. Time will vary depending upon the individual case. Any comments on the amount of time you require to complete this form and/or suggestions for reducing this burden, should be sent to the Chief Information Officer, U.S. Patent and Trademark Office, U.S. Department of Commerce, P.O. Box 1450, Alexandria, Virginia 22313-1450. DO NOT SEND FEES OR COMPLETED FORMS TO THIS ADDRESS. SEND TO: Commissioner for Patents, P.O. Box 1450, Alexandria, Virginia 22313-1450. Under the Paperwork Reduction Act of 1995, no persons are required to respond to a collection of information unless it displays a valid OMB control number.

Privacy Act Statement

The Privacy Act of 1974 (P.L. 93-579) requires that you be given certain information in connection with your submission of the attached form related to a patent application or patent. Accordingly, pursuant to the requirements of the Act, please be advised that: (1) the general authority for the collection of this information is 35 U.S.C. 2(b)(2); (2) furnishing of the information solicited is voluntary; and (3) the principal purpose for which the information is used by the U.S. Patent and Trademark Office is to process and/or examine your submission related to a patent application or patent. If you do not furnish the requested information, the U.S. Patent and Trademark Office may not be able to process and/or examine your submission, which may result in termination of proceedings or abandonment of the application or expiration of the patent.

The information provided by you in this form will be subject to the following routine uses:

1. The information on this form will be treated confidentially to the extent allowed under the Freedom of Information Act (5 U.S.C. 552) and the Privacy Act (5 U.S.C 552a). Records from this system of records may be disclosed to the Department of Justice to determine whether disclosure of these records is required by the Freedom of Information Act.
2. A record from this system of records may be disclosed, as a routine use, in the course of presenting evidence to a court, magistrate, or administrative tribunal, including disclosures to opposing counsel in the course of settlement negotiations.
3. A record in this system of records may be disclosed, as a routine use, to a Member of Congress submitting a request involving an individual, to whom the record pertains, when the individual has requested assistance from the Member with respect to the subject matter of the record.
4. A record in this system of records may be disclosed, as a routine use, to a contractor of the Agency having need for the information in order to perform a contract. Recipients of information shall be required to comply with the requirements of the Privacy Act of 1974, as amended, pursuant to 5 U.S.C. 552a(m).
5. A record related to an International Application filed under the Patent Cooperation Treaty in this system of records may be disclosed, as a routine use, to the International Bureau of the World Intellectual Property Organization, pursuant to the Patent Cooperation Treaty.
6. A record in this system of records may be disclosed, as a routine use, to another federal agency for purposes of National Security review (35 U.S.C. 181) and for review pursuant to the Atomic Energy Act (42 U.S.C. 218(c)).
7. A record from this system of records may be disclosed, as a routine use, to the Administrator, General Services, or his/her designee, during an inspection of records conducted by GSA as part of that agency's responsibility to recommend improvements in records management practices and programs, under authority of 44 U.S.C. 2904 and 2906. Such disclosure shall be made in accordance with the GSA regulations governing inspection of records for this purpose, and any other relevant (i.e., GSA or Commerce) directive. Such disclosure shall not be used to make determinations about individuals.
8. A record from this system of records may be disclosed, as a routine use, to the public after either publication of the application pursuant to 35 U.S.C. 122(b) or issuance of a patent pursuant to 35 U.S.C. 151. Further, a record may be disclosed, subject to the limitations of 37 CFR 1.14, as a routine use, to the public if the record was filed in an application which became abandoned or in which the proceedings were terminated and which application is referenced by either a published application, an application open to public inspection or an issued patent.
9. A record from this system of records may be disclosed, as a routine use, to a Federal, State, or local law enforcement agency, if the USPTO becomes aware of a violation or potential violation of law or regulation.

Notice of Allowability	Application No. 14/338,240	Applicant(s) BURKE ET AL.	
	Examiner SHRIPAL KHAJURIA	Art Unit 2478	AIA (First Inventor to File) Status No

-- The MAILING DATE of this communication appears on the cover sheet with the correspondence address--

All claims being allowable, PROSECUTION ON THE MERITS IS (OR REMAINS) CLOSED in this application. If not included herewith (or previously mailed), a Notice of Allowance (PTOL-85) or other appropriate communication will be mailed in due course. **THIS NOTICE OF ALLOWABILITY IS NOT A GRANT OF PATENT RIGHTS.** This application is subject to withdrawal from issue at the initiative of the Office or upon petition by the applicant. See 37 CFR 1.313 and MPEP 1308.

1. ☒ This communication is responsive to *3/14/16*.
   ☐ A declaration(s)/affidavit(s) under **37 CFR 1.130(b)** was/were filed on_____.
2. ☐ An election was made by the applicant in response to a restriction requirement set forth during the interview on _____; the restriction requirement and election have been incorporated into this action.
3. ☒ The allowed claim(s) is/are *1-2, 8-12, 17, 20, 21, 23, 26, 28, 29, 31, 32, 34, 39, 41-43 and 116 - 142*

(to be renumbered claims 1-48 . As a result of the allowed claim(s), you may be eligible to benefit from the **Patent Prosecution Highway** program at a participating intellectual property office for the corresponding application. For more information, please see http://www.uspto.gov/patents/init_events/pph/index.jsp or send an inquiry to PPHfeedback@uspto.gov .

4. ☐ Acknowledgment is made of a claim for foreign priority under 35 U.S.C. § 119(a)-(d) or (f).

   Certified copies:

   a) ☐ All b) ☐ Some *c) ☐ None of the:
   1. ☐ Certified copies of the priority documents have been received.
   2. ☐ Certified copies of the priority documents have been received in Application No. _____ .
   3. ☐ Copies of the certified copies of the priority documents have been received in this national stage application from the International Bureau (PCT Rule 17.2(a)).

   * Certified copies not received: _____.

Applicant has THREE MONTHS FROM THE "MAILING DATE" of this communication to file a reply complying with the requirements noted below. Failure to timely comply will result in ABANDONMENT of this application.
THIS THREE-MONTH PERIOD IS NOT EXTENDABLE.

5. ☐ CORRECTED DRAWINGS (as "replacement sheets") must be submitted.
   ☐ including changes required by the attached Examiner's Amendment / Comment or in the Office action of Paper No./Mail Date _____.

   Identifying indicia such as the application number (see 37 CFR 1.84(c)) should be written on the drawings in the front (not the back) of each sheet. Replacement sheet(s) should be labeled as such in the header according to 37 CFR 1.121(d).

6. ☐ DEPOSIT OF and/or INFORMATION about the deposit of BIOLOGICAL MATERIAL must be submitted. Note the attached Examiner's comment regarding REQUIREMENT FOR THE DEPOSIT OF BIOLOGICAL MATERIAL.

Attachment(s)

1. ☐ Notice of References Cited (PTO-892)
2. ☐ Information Disclosure Statements (PTO/SB/08), Paper No./Mail Date _____
3. ☐ Examiner's Comment Regarding Requirement for Deposit of Biological Material
4. ☐ Interview Summary (PTO-413), Paper No./Mail Date _____ .
5. ☐ Examiner's Amendment/Comment
6. ☐ Examiner's Statement of Reasons for Allowance
7. ☐ Other _____.

/SHRIPAL KHAJURIA/
Primary Examiner, Art Unit 2478

EAST Search History

EAST Search History (Prior Art)

Ref #	Hits	Search Query	DBs	Default Operator	Plurals	Time Stamp
L4	7948	burke.in.	US-PGPUB; USPAT; USOCR	OR	OFF	2016/05/25 11:30
L5	837	carman.in.	US-PGPUB; USPAT; USOCR	OR	OFF	2016/05/25 11:30
L6	5	(L4 L5) and (regulating same node same network same processor).clm.	US-PGPUB; USPAT; USOCR	OR	OFF	2016/05/25 11:30
S1	5488	burke.in.	US-PGPUB; USPAT; USOCR	OR	OFF	2009/04/27 11:58
S2	585	carman.in.	US-PGPUB; USPAT; USOCR	OR	OFF	2009/04/27 11:58
S3	1	(S1 S2) and (regulating same node same network same processor).clm.	US-PGPUB; USPAT; USOCR	OR	OFF	2009/04/27 11:59
S4	3886	(709/225).CCLS.	US-PGPUB; USPAT; USOCR	OR	OFF	2009/04/27 12:11
S5	0	network same parition$3 and user near (portion or part)	US-PGPUB; USPAT; USOCR	OR	OFF	2009/10/23 14:15
S6	0	network same paritition$3 and user near (portion or part)	US-PGPUB; USPAT; USOCR	OR	OFF	2009/10/23 14:15
S7	709	network same partition$3 and user near (portion or part)	US-PGPUB; USPAT; USOCR	OR	OFF	2009/10/23 14:15
S8	7462681	network same partition$3 and user near (portion or part) and network (part or portion)	US-PGPUB; USPAT; USOCR	OR	OFF	2009/10/23 14:15
S9	119	network same partition$3 and user near (portion or part) and network near (part or portion)	US-PGPUB; USPAT; USOCR	OR	OFF	2009/10/23 14:16

S10	6	network same partition$3 and user near (portion or part) same network near (part or portion)	US-PGPUB; USPAT; USOCR	OR	OFF	2009/10/23 14:18
S11	9	("6516416" "20010051996" "20020169865" "20020120577" "6694429" "20020059440" "20020145981" "20030204602" "20030233281").pn.	US-PGPUB; USPAT; USOCR	OR	OFF	2009/10/23 14:21
S12	11	predetermined near website same list	US-PGPUB; USPAT; USOCR	OR	OFF	2009/10/23 14:51
S13	9	predetermined near websites same list	US-PGPUB; USPAT; USOCR	OR	OFF	2009/10/23 14:52
S14	4	predetermined near websites and weight same website	US-PGPUB; USPAT; USOCR	OR	OFF	2009/10/23 15:01
S15	16	predetermined near sites and weight same site and network and internet	US-PGPUB; USPAT; USOCR	OR	OFF	2009/10/23 15:04
S16	20	predetermined near web and weight same web and network and internet	US-PGPUB; USPAT; USOCR	OR	OFF	2009/10/23 15:06
S17	0	gateway and storage and autheticator	US-PGPUB; USPAT; USOCR	OR	OFF	2009/10/23 16:22
S18	836	gateway and storage and authenticator	US-PGPUB; USPAT; USOCR	OR	OFF	2009/10/23 16:22
S19	125	gateway and storage and pay near3 pay near3 view	US-PGPUB; USPAT; USOCR	OR	OFF	2009/10/23 16:23
S20	73	gateway and storage and pay near3 pay near3 view and modes	US-PGPUB; USPAT; USOCR	OR	OFF	2009/10/23 16:24
S21	73	gateway and storage and pay near3 pay near3 view and modes and display	US-PGPUB; USPAT; USOCR	OR	OFF	2009/10/23 16:24
S22	1	"20050033990".pn.	US-PGPUB; USPAT; USOCR	OR	OFF	2009/10/23 16:25
S23	1	"6516416".pn.	US-PGPUB; USPAT; USOCR	OR	OFF	2010/08/13 16:38
S24	5893	burke.in.	US-PGPUB;	OR	OFF	2010/08/13 17:16

			USPAT; USOCR			
S25	626	carman.in.	US-PGPUB; USPAT; USOCR	OR	OFF	2010/08/13 17:16
S26	1	(S24 S25) and (regulating same node same network same processor).clm.	US-PGPUB; USPAT; USOCR	OR	OFF	2010/08/13 17:16
S27	4846	(709/225).CCLS.	US-PGPUB; USPAT; USOCR	OR	OFF	2010/08/13 17:16
S28	1	"20020120577".pn.	US-PGPUB; USPAT; USOCR	OR	OFF	2010/08/13 17:16
S29	136	network same partition$3 and user near (portion or part) and network near (part or portion)	US-PGPUB; USPAT; USOCR	OR	OFF	2010/08/13 18:23
S30	6	network same partition$3 and user near (portion or part) same network near (part or portion)	US-PGPUB; USPAT; USOCR	OR	OFF	2010/08/13 18:23
S31	6107	burke.in.	US-PGPUB; USPAT; USOCR	OR	OFF	2011/04/07 20:12
S32	651	carman.in.	US-PGPUB; USPAT; USOCR	OR	OFF	2011/04/07 20:12
S33	1	(S31 S32) and (regulating same node same network same processor).clm.	US-PGPUB; USPAT; USOCR	OR	OFF	2011/04/07 20:12
S34	5364	(709/225).CCLS.	US-PGPUB; USPAT; USOCR	OR	OFF	2011/04/07 20:12
S35	1	"6516416".pn.	US-PGPUB; USPAT; USOCR	OR	OFF	2011/04/07 20:46
S36	6258	burke.in.	US-PGPUB; USPAT; USOCR	OR	OFF	2011/09/30 16:52
S37	668	carman.in.	US-PGPUB; USPAT; USOCR	OR	OFF	2011/09/30 16:52
S38	1	(S36 S37) and (regulating same node same network same processor).clm.	US-PGPUB; USPAT; USOCR	OR	OFF	2011/09/30 16:52

S39	5816	(709/225).CCLS.	US-PGPUB; USPAT; USOCR	OR	OFF	2011/09/30 16:52
S40	175	network same partition$3 and user near (portion or part) and network near (part or portion)	US-PGPUB; USPAT; USOCR	OR	OFF	2011/09/30 17:02
S41	6	predetermined near websites and weight same website	US-PGPUB; USPAT; USOCR	OR	OFF	2011/09/30 17:02
S42	85	gateway and storage and pay near3 pay near3 view and modes and display	US-PGPUB; USPAT; USOCR	OR	OFF	2011/09/30 17:02
S43	0	("L8" "L9") and (regulating same node same network same processor).clm.	US-PGPUB; USPAT; USOCR	OR	OFF	2011/09/30 17:03
S51	7053	burke.in.	US-PGPUB; USPAT; USOCR	OR	OFF	2014/01/10 18:29
S52	767	carman.in.	US-PGPUB; USPAT; USOCR	OR	OFF	2014/01/10 18:29
S53	1	(S51 S52) and (controller same provider same interface same entered).clm.	US-PGPUB; USPAT; USOCR	OR	OFF	2014/01/10 18:29
S54	4816	h04l63/10.cpc.	US-PGPUB; USPAT; USOCR	OR	OFF	2014/01/10 18:31
S55	2614	h04l2463/101.cpc.	US-PGPUB; USPAT; USOCR	OR	OFF	2014/01/10 18:31
S56	8072	(709/225).CCLS.	US-PGPUB; USPAT; USOCR	OR	OFF	2014/01/10 18:32
S57	7208	burke.in.	US-PGPUB; USPAT; USOCR	OR	OFF	2014/05/22 15:00
S58	779	carman.in.	US-PGPUB; USPAT; USOCR	OR	OFF	2014/05/22 15:00
S59	3	(S57 S58) and (regulating same node same network same processor).clm.	US-PGPUB; USPAT; USOCR	OR	OFF	2014/05/22 15:00
S60	8445	(709/225).CCLS.	US-PGPUB; USPAT;	OR	OFF	2014/05/22 15:00

			USOCR			
S61	9	network same partition$3 and user near (portion or part) same network near (part or portion)	US-PGPUB; USPAT; USOCR	OR	OFF	2014/05/22 15:00
S62	10	predetermined near websites and weight same website	US-PGPUB; USPAT; USOCR	OR	OFF	2014/05/22 15:00
S71	7758	burke.in.	US-PGPUB; USPAT; USOCR	OR	OFF	2015/12/14 11:33
S72	824	carman.in.	US-PGPUB; USPAT; USOCR	OR	OFF	2015/12/14 11:33
S73	5	(S71 S72) and (regulating same node same network same processor).clm.	US-PGPUB; USPAT; USOCR	OR	OFF	2015/12/14 11:33

EAST Search History (Interference)

Ref #	Hits	Search Query	DBs	Default Operator	Plurals	Time Stamp
L1	6824	burke.in.	US-PGPUB; USPAT	OR	OFF	2016/05/25 11:30
L2	703	carman.in.	US-PGPUB; USPAT	OR	OFF	2016/05/25 11:30
L3	5	(L1 L2) and (regulating same node same network same processor).clm.	US-PGPUB; USPAT	OR	OFF	2016/05/25 11:30
S44	5169	burke.in.	US-PGPUB; USPAT	OR	OFF	2011/09/30 17:02
S45	535	carman.in.	US-PGPUB; USPAT	OR	OFF	2011/09/30 17:02
S46	0	("L8" "L9") and (regulating same node same network same processor).clm.	US-PGPUB; USPAT	OR	OFF	2011/09/30 17:03
S47	6	predetermined near websites and weight same website	US-PGPUB; USPAT	OR	OFF	2011/09/30 17:03
S48	181	network same partition$3 and user near (portion or part) and network near (part or portion)	US-PGPUB; USPAT	OR	OFF	2011/09/30 17:03
S49	85	gateway and storage and pay near3 pay near3 view and modes and display	US-PGPUB; USPAT	OR	OFF	2011/09/30 17:03
S50	28	predetermined near web and weight same web and network and internet	US-PGPUB; USPAT	OR	OFF	2011/09/30 17:04
S63	6112	burke.in.	US-PGPUB;	OR	OFF	2014/05/22 14:59

			USPAT			
S64	646	carman.in.	US-PGPUB; USPAT	OR	OFF	2014/05/22 14:59
S65	0	("L8" "L9") and (regulating same node same network same processor).clm.	US-PGPUB; USPAT	OR	OFF	2014/05/22 14:59
S66	10	predetermined near websites and weight same website	US-PGPUB; USPAT	OR	OFF	2014/05/22 14:59
S67	397	network same partition$3 and user near (portion or part) and network near (part or portion)	US-PGPUB; USPAT	OR	OFF	2014/05/22 14:59
S68	103	gateway and storage and pay near3 pay near3 view and modes and display	US-PGPUB; USPAT	OR	OFF	2014/05/22 14:59
S69	45	predetermined near web and weight same web and network and internet	US-PGPUB; USPAT	OR	OFF	2014/05/22 14:59
S70	37	predetermined near sites and weight same site and network and internet	US-PGPUB; USPAT	OR	OFF	2014/05/22 15:00

5/25/2016 11:31:17 AM
C:\Users\skhajuria\Documents\EAST\Workspaces\14338240.wsp

Issue Classification	Application/Control No.	Applicant(s)/Patent Under Reexamination
	14338240	BURKE ET AL.
	Examiner	**Art Unit**
	SHRIPAL KHAJURIA	2478

CPC						
Symbol					**Type**	**Version**
G06F		21	/	10	F	2013-01-01
H04L		63	/	10	I	2013-01-01
H04L		2463	/	101	A	2013-01-01
G06Q		30	/	0251	I	2013-01-01
G06Q		30	/	0273	I	2013-01-01
G06Q		50	/	184	I	2013-01-01
G06Q		50	/	26	I	2013-01-01
H04L		63	/	02	I	2013-01-01
H04L		63	/	1458	I	2013-01-01
H04L		63	/	30	I	2013-01-01
			/			
			/			
			/			
			/			
			/			

CPC Combination Sets							
Symbol					**Type**	**Set**	**Ranking**	**Version**
			/					
			/					

NONE		**Total Claims Allowed:**	
(Assistant Examiner)	(Date)	48	
/SHRIPAL KHAJURIA/ Primary Examiner.Art Unit 2478	05/25/2016	O.G. Print Claim(s)	O.G. Print Figure
(Primary Examiner)	(Date)	1	1

Issue Classification	Application/Control No.	Applicant(s)/Patent Under Reexamination
	14338240	BURKE ET AL.
	Examiner	**Art Unit**
	SHRIPAL KHAJURIA	2478

US ORIGINAL CLASSIFICATION		INTERNATIONAL CLASSIFICATION										
CLASS	SUBCLASS	CLAIMED					NON-CLAIMED					
709	225	H	0	4	L	15 / 16 (2006.01.01)						

CROSS REFERENCE(S)					
CLASS	SUBCLASS (ONE SUBCLASS PER BLOCK)				

NONE		Total Claims Allowed:	
(Assistant Examiner)	(Date)	48	
/SHRIPAL KHAJURIA/ Primary Examiner.Art Unit 2478	05/25/2016	O.G. Print Claim(s)	O.G. Print Figure
(Primary Examiner)	(Date)	1	1

Issue Classification	Application/Control No.	Applicant(s)/Patent Under Reexamination
	14338240	BURKE ET AL.
	Examiner	**Art Unit**
	SHRIPAL KHAJURIA	2478

☐ Claims renumbered in the same order as presented by applicant ☐ CPA ☒ T.D. ☐ R.1.47

Final	Original	Final	Original	Final	Original	Final	Original	Final	Original	Final	Original	Final	Original	Final	Original
1	1	10	21	19	41		61		81		101	34	121	27	141
2	2		22	20	42		62		82		102	35	122	28	142
	3	11	23	21	43		63		83		103	36	123		
	4		24		44		64		84		104	37	124		
	5		25		45		65		85		105	38	125		
	6	12	26		46		66		86		106	39	126		
	7		27		47		67		87		107	40	127		
3	8	13	28		48		68		88		108	41	128		
4	9	14	29		49		69		89		109	42	129		
5	10		30		50		70		90		110	43	130		
6	11	15	31		51		71		91		111	44	131		
7	12	16	32		52		72		92		112	45	132		
	13		33		53		73		93		113	46	133		
	14	17	34		54		74		94		114	47	134		
	15		35		55		75		95		115	48	135		
	16		36		56		76		96	29	116	22	136		
8	17		37		57		77		97	30	117	23	137		
	18		38		58		78		98	31	118	24	138		
	19	18	39		59		79		99	32	119	25	139		
9	20		40		60		80		100	33	120	25	140		

NONE (Assistant Examiner)	(Date)	**Total Claims Allowed:** 48	
/SHRIPAL KHAJURIA/ Primary Examiner.Art Unit 2478 (Primary Examiner)	05/25/2016 (Date)	O.G. Print Claim(s) 1	O.G. Print Figure 1

Search Notes	Application/Control No.	Applicant(s)/Patent Under Reexamination
	14338240	BURKE ET AL.
	Examiner	Art Unit
	SHRIPAL KHAJURIA	2478

CPC- SEARCHED		
Symbol	Date	Examiner
H04163/10	12/14/2015	skk
H04163/10	5/24/2016	skk

CPC COMBINATION SETS - SEARCHED		
Symbol	Date	Examiner

US CLASSIFICATION SEARCHED			
Class	Subclass	Date	Examiner
709	225	12/14/2015	skk
709	225	5/24/2016	skk

SEARCH NOTES		
Search Notes	Date	Examiner
Text search of East (USPat, USPG_Pub, JPO, EPO, Derwent, IBM_TDB) and Inventor search	12/14/2015	skk
Updated Text search of East (USPat, USPG_Pub, JPO, EPO, Derwent, IBM_TDB) and Inventor search	5/24/2016	skk

INTERFERENCE SEARCH			
US Class/ CPC Symbol	US Subclass / CPC Group	Date	Examiner
Interference Search	PgPub and UnPub - see attached East search history	5/24/2016	skk

Index of Claims	Application/Control No.	Applicant(s)/Patent Under Reexamination
	14338240	BURKE ET AL.
	Examiner	**Art Unit**
	SHRIPAL KHAJURIA	2478

✓	Rejected	-	Cancelled	N	Non-Elected	A	Appeal
=	Allowed	÷	Restricted	I	Interference	O	Objected

☐ Claims renumbered in the same order as presented by applicant ☐ CPA ☒ T.D. ☐ R.1.47

CLAIM		DATE								
Final	Original	12/14/2015	05/25/2016							
1	1	✓	=							
2	2	✓	=							
	3	✓								
	4	✓								
	5	✓								
	6	✓								
	7	✓								
3	8	✓	=							
4	9	✓	=							
5	10	✓	=							
6	11	✓	=							
7	12	✓	=							
	13	✓								
	14	✓								
	15	✓								
	16	✓								
8	17	✓	=							
	18	✓								
	19	✓								
9	20	✓	=							
10	21	✓	=							
	22	✓								
11	23	✓	=							
	24	✓								
	25	✓								
12	26	✓	=							
	27	✓								
13	28	✓	=							
14	29	✓	=							
	30	✓								
15	31	✓	=							
16	32	✓	=							
	33	✓								
17	34	✓	=							
	35	✓								
	36	✓								

Index of Claims	Application/Control No.	Applicant(s)/Patent Under Reexamination
	14338240	BURKE ET AL.
	Examiner	Art Unit
	SHRIPAL KHAJURIA	2478

✓	Rejected	-	Cancelled	N	Non-Elected	A	Appeal
=	Allowed	÷	Restricted	I	Interference	O	Objected

☐ Claims renumbered in the same order as presented by applicant ☐ CPA ☒ T.D. ☐ R.1.47

CLAIM		DATE								
Final	Original	12/14/2015	05/25/2016							
	37	✓								
	38	✓								
18	39	✓	=							
	40	✓								
19	41	✓	=							
20	42	✓	=							
21	43	✓	=							
	44	✓								
	45	✓								
	46	✓								
	47	✓								
	48	✓								
	49									
	50									
	51									
	52									
	53									
	54									
	55									
	56									
	57									
	58									
	59									
	60									
	61									
	62									
	63									
	64									
	65									
	66									
	67									
	68									
	69									
	70									
	71									
	72									

Index of Claims	Application/Control No.	Applicant(s)/Patent Under Reexamination
	14338240	BURKE ET AL.
	Examiner	**Art Unit**
	SHRIPAL KHAJURIA	2478

✓	Rejected	-	Cancelled	N	Non-Elected	A	Appeal
=	Allowed	÷	Restricted	I	Interference	O	Objected

☐ Claims renumbered in the same order as presented by applicant ☐ CPA ☒ T.D. ☐ R.1.47

CLAIM		DATE								
Final	Original	12/14/2015	05/25/2016							
	73									
	74									
	75									
	76									
	77									
	78									
	79									
	80									
	81									
	82									
	83									
	84									
	85									
	86									
	87									
	88									
	89									
	90									
	91									
	92									
	93									
	94									
	95									
	96									
	97									
	98									
	99									
	100									
	101									
	102									
	103									
	104									
	105									
	106									
	107									
	108									

Index of Claims	Application/Control No.	Applicant(s)/Patent Under Reexamination
	14338240	BURKE ET AL.
	Examiner	Art Unit
	SHRIPAL KHAJURIA	2478

✓	Rejected	-	Cancelled	N	Non-Elected	A	Appeal
=	Allowed	÷	Restricted	I	Interference	O	Objected

☐ Claims renumbered in the same order as presented by applicant ☐ CPA ☒ T.D. ☐ R.1.47

CLAIM		DATE								
Final	Original	12/14/2015	05/25/2016							
	109									
	110									
	111									
	112									
	113									
	114									
	115									
29	116		=							
30	117		=							
31	118		=							
32	119		=							
33	120		=							
34	121		=							
35	122		=							
36	123		=							
37	124		=							
38	125		=							
39	126		=							
40	127		=							
41	128		=							
42	129		=							
43	130		=							
44	131		=							
45	132		=							
46	133		=							
47	134		=							
48	135		=							
22	136		=							
23	137		=							
24	138		=							
25	139		=							
26	140		=							
27	141		=							
28	142		=							

PART B - FEE(S) TRANSMITTAL

Complete and send this form, together with applicable fee(s), to: Mail **Mail Stop ISSUE FEE**
Commissioner for Patents
P.O. Box 1450
Alexandria, Virginia 22313-1450
or Fax **(571)-273-2885**

INSTRUCTIONS: This form should be used for transmitting the ISSUE FEE and PUBLICATION FEE (if required). Blocks 1 through 5 should be completed where appropriate. All further correspondence including the Patent, advance orders and notification of maintenance fees will be mailed to the current correspondence address as indicated unless corrected below or directed otherwise in Block 1, by (a) specifying a new correspondence address; and/or (b) indicating a separate "FEE ADDRESS" for maintenance fee notifications.

CURRENT CORRESPONDENCE ADDRESS (Note: Use Block 1 for any change of address)

66172 7590 06/07/2016
SCHWABE, WILLIAMSON & WYATT, P.C.
1420 FIFTH AVENUE, SUITE 3400
SEATTLE, WA 98101-4010

Note: A certificate of mailing can only be used for domestic mailings of the Fee(s) Transmittal. This certificate cannot be used for any other accompanying papers. Each additional paper, such as an assignment or formal drawing, must have its own certificate of mailing or transmission.

Certificate of Mailing or Transmission
I hereby certify that this Fee(s) Transmittal is being deposited with the United States Postal Service with sufficient postage for first class mail in an envelope addressed to the Mail Stop ISSUE FEE address above, or being facsimile transmitted to the USPTO (571) 273-2885, on the date indicated below.

(Depositor's name)
(Signature)
(Date)

APPLICATION NO.	FILING DATE	FIRST NAMED INVENTOR	ATTORNEY DOCKET NO.	CONFIRMATION NO.
14/338,240	07/22/2014	Robert M. Burke II	123205-198706	7564

TITLE OF INVENTION: SYSTEM FOR REGULATING ACCESS TO AND DISTRIBUTING CONTENT IN A NETWORK

APPLN. TYPE	ENTITY STATUS	ISSUE FEE DUE	PUBLICATION FEE DUE	PREV. PAID ISSUE FEE	TOTAL FEE(S) DUE	DATE DUE
nonprovisional	SMALL	$480	$0	$0	$480	09/07/2016

EXAMINER	ART UNIT	CLASS-SUBCLASS
KHAJURIA, SHRIPAL K	2478	709-225000

1. Change of correspondence address or indication of "Fee Address" (37 CFR 1.363).
☒ Change of correspondence address (or Change of Correspondence Address form PTO/SB/122) attached.
☐ "Fee Address" indication (or "Fee Address" Indication form PTO/SB/47; Rev 03-02 or more recent) attached. **Use of a Customer Number is required.**

2. For printing on the patent front page, list
(1) The names of up to 3 registered patent attorneys or agents OR, alternatively,
(2) The name of a single firm (having as a member a registered attorney or agent) and the names of up to 2 registered patent attorneys or agents. If no name is listed, no name will be printed.
1 .....
2 .....
3 .....

3. ASSIGNEE NAME AND RESIDENCE DATA TO BE PRINTED ON THE PATENT (print or type)

PLEASE NOTE: Unless an assignee is identified below, no assignee data will appear on the patent. If an assignee is identified below, the document has been filed for recordation as set forth in 37 CFR 3.11. Completion of this form is NOT a substitute for filing an assignment.

(A) NAME OF ASSIGNEE (B) RESIDENCE: (CITY and STATE OR COUNTRY)

Please check the appropriate assignee category or categories (will not be printed on the patent): ☐ Individual ☐ Corporation or other private group entity ☐ Government

4a. The following fee(s) are submitted:
☒ Issue Fee
☐ Publication Fee (No small entity discount permitted)
☐ Advance Order - # of Copies .....

4b. Payment of Fee(s): **(Please first reapply any previously paid issue fee shown above)**
☐ A check is enclosed.
☐ Payment by credit card. Form PTO-2038 is attached.
☒ The director is hereby authorized to charge the required fee(s), any deficiency, or credits any overpayment, to Deposit Account Number 500682 (enclose an extra copy of this form).

5. **Change in Entity Status** (from status indicated above)
☐ Applicant certifying micro entity status. See 37 CFR 1.29
NOTE: Absent a valid certification of Micro Entity Status (see forms PTO/SB/15A and 15B), issue fee payment in the micro entity amount will not be accepted at the risk of application abandonment.
☐ Applicant asserting small entity status. See 37 CFR 1.27
NOTE: If the application was previously under micro entity status, checking this box will be taken to be a notification of loss of entitlement to micro entity status.
☐ Applicant changing to regular undiscounted fee status.
NOTE: Checking this box will be taken to be a notification of loss of entitlement to small or micro entity status, as applicable.

NOTE: This form must be signed in accordance with 37 CFR 1.31 and 1.33. See 37 CFR 1.4 for signature requirements and certifications.

Authorized Signature: Michael L. Wach Date: Sept 6, 2016
Typed or printed name: Michael L. Wach Registration No. 54,517

PTOL-85 Part B (10-13) Approved for use through 10/31/2013. OMB 0651-0033 U.S. Patent and Trademark Office; U.S. DEPARTMENT OF COMMERCE

Doc Code: PA..
Document Description: Power of Attorney

PTO/AIA/82B (07-13)
Approved for use through 11/30/2014. OMB 0651-0031
U.S. Patent and Trademark Office; U.S. DEPARTMENT OF COMMERCE
Under the Paperwork Reduction Act of 1995, no persons are required to respond to a collection of information unless it displays a valid OMB control number

POWER OF ATTORNEY BY APPLICANT

I hereby revoke all previous powers of attorney given in the application identified in either the attached transmittal letter or the boxes below.

Application Number	Filing Date
14/338,240	07/22/2014

(Note: The boxes above may be left blank if information is provided on form PTO/AIA/82A.)

☑ I hereby appoint the Patent Practitioner(s) associated with the following Customer Number as my/our attorney(s) or agent(s), and to transact all business in the United States Patent and Trademark Office connected therewith for the application referenced in the attached transmittal letter (form PTO/AIA/82A) or identified above: 143183

OR

☐ I hereby appoint Practitioner(s) named in the attached list (form PTO/AIA/82C) as my/our attorney(s) or agent(s), and to transact all business in the United States Patent and Trademark Office connected therewith for the patent application referenced in the attached transmittal letter (form PTO/AIA/82A) or identified above. (Note: Complete form PTO/AIA/82C.)

Please recognize or change the correspondence address for the application identified in the attached transmittal letter or the boxes above to:

☑ The address associated with the above-mentioned Customer Number

OR

☐ The address associated with Customer Number:

OR

	Firm or Individual Name				
Address					
City		State		Zip	
Country					
Telephone		Email			

I am the Applicant (if the Applicant is a juristic entity, list the Applicant name in the box):

☑ Inventor or Joint Inventor (title not required below)

☐ Legal Representative of a Deceased or Legally Incapacitated Inventor (title not required below)

☐ Assignee or Person to Whom the Inventor is Under an Obligation to Assign (provide signer's title if applicant is a juristic entity)

☐ Person Who Otherwise Shows Sufficient Proprietary Interest (e.g., a petition under 37 CFR 1.46(b)(2) was granted in the application or is concurrently being filed with this document) (provide signer's title if applicant is a juristic entity)

SIGNATURE of Applicant for Patent

The undersigned (whose title is supplied below) is authorized to act on behalf of the applicant (e.g., where the applicant is a juristic entity).

Signature	D Z Carman	Date (Optional)	
Name	D. ZAC CARMAN		
Title			

NOTE: Signature - This form must be signed by the applicant in accordance with 37 CFR 1.33. See 37 CFR 1.4 for signature requirements and certifications. If more than one applicant, use multiple forms.

☐ Total of forms are submitted.

This collection of information is required by 37 CFR 1.131, 1.32, and 1.33. The information is required to obtain or retain a benefit by the public which is to file (and by the USPTO to process) an application. Confidentiality is governed by 35 U.S.C. 122 and 37 CFR 1.11 and 1.14. This collection is estimated to take 3 minutes to complete, including gathering, preparing, and submitting the completed application form to the USPTO. Time will vary depending upon the individual case. Any comments on the amount of time you require to complete this form and/or suggestions for reducing this burden, should be sent to the Chief Information Officer, U.S. Patent and Trademark Office, U.S. Department of Commerce, P.O. Box 1450, Alexandria, VA 22313-1450. DO NOT SEND FEES OR COMPLETED FORMS TO THIS ADDRESS. SEND TO: Commissioner for Patents, P.O. Box 1450, Alexandria, VA 22313-1450.

If you need assistance in completing the form, call 1-800-PTO-9199 and select option 2.

Doc Code: PA..
Document Description: Power of Attorney

PTO/AIA/82B (07-13)
Approved for use through 11/30/2014. OMB 0651-0031
U.S. Patent and Trademark Office: U.S. DEPARTMENT OF COMMERCE
Under the Paperwork Reduction Act of 1995, no persons are required to respond to a collection of information unless it displays a valid OMB control number

POWER OF ATTORNEY BY APPLICANT

I hereby revoke all previous powers of attorney given in the application identified in either the attached transmittal letter or the boxes below.

Application Number	Filing Date
14/338,240	07/22/2014

(Note: The boxes above may be left blank if information is provided on form PTO/AIA/82A.)

☑ I hereby appoint the Patent Practitioner(s) associated with the following Customer Number as my/our attorney(s) or agent(s), and to transact all business in the United States Patent and Trademark Office connected therewith for the application referenced in the attached transmittal letter (form PTO/AIA/82A) or identified above:

OR 143183

☐ I hereby appoint Practitioner(s) named in the attached list (form PTO/AIA/82C) as my/our attorney(s) or agent(s), and to transact all business in the United States Patent and Trademark Office connected therewith for the patent application referenced in the attached transmittal letter (form PTO/AIA/82A) or identified above. (Note: Complete form PTO/AIA/82C.)

Please recognize or change the correspondence address for the application identified in the attached transmittal letter or the boxes above to:

☑ The address associated with the above-mentioned Customer Number

OR

☐ The address associated with Customer Number:

OR

	Firm or Individual Name				
Address					
City		State		Zip	
Country					
Telephone		Email			

I am the Applicant (if the Applicant is a juristic entity, list the Applicant name in the box):

☑ Inventor or Joint Inventor (title not required below)

☐ Legal Representative of a Deceased or Legally Incapacitated Inventor (title not required below)

☐ Assignee or Person to Whom the Inventor is Under an Obligation to Assign (provide signer's title if applicant is a juristic entity)

☐ Person Who Otherwise Shows Sufficient Proprietary Interest (e.g., a petition under 37 CFR 1.46(b)(2) was granted in the application or is concurrently being filed with this document) (provide signer's title if applicant is a juristic entity)

SIGNATURE of Applicant for Patent

The undersigned (whose title is supplied below) is authorized to act on behalf of the applicant (e.g., where the applicant is a juristic entity).

Signature	/Robert M. Burke II/	Date (Optional)	
Name	Robert M. Burke II		
Title			

NOTE: Signature - This form must be signed by the applicant in accordance with 37 CFR 1.33. See 37 CFR 1.4 for signature requirements and certifications. If more than one applicant, use multiple forms.

☐ Total of forms are submitted.

This collection of information is required by 37 CFR 1.131, 1.32, and 1.33. The information is required to obtain or retain a benefit by the public which is to file (and by the USPTO to process) an application. Confidentiality is governed by 35 U.S.C. 122 and 37 CFR 1.11 and 1.14. This collection is estimated to take 3 minutes to complete, including gathering, preparing, and submitting the completed application form to the USPTO. Time will vary depending upon the individual case. Any comments on the amount of time you require to complete this form and/or suggestions for reducing this burden, should be sent to the Chief Information Officer, U.S. Patent and Trademark Office, U.S. Department of Commerce, P.O. Box 1450, Alexandria, VA 22313-1450. DO NOT SEND FEES OR COMPLETED FORMS TO THIS ADDRESS. SEND TO: Commissioner for Patents, P.O. Box 1450, Alexandria, VA 22313-1450.

If you need assistance in completing the form, call 1-800-PTO-9199 and select option 2.

PTO/AIA/122 (08-12)
Approved for use through 01/31/2018. OMB 0651-0035
U.S. Patent and Trademark Office; U.S. DEPARTMENT OF COMMERCE
Under the Paperwork Reduction Act of 1995, no persons are required to respond to a collection of information unless it displays a valid OMB control number.

CHANGE OF CORRESPONDENCE ADDRESS
Application

Address to:
Commissioner for Patents
P.O. Box 1450
Alexandria, VA 22313-1450

Application Number	14/338,240
Filing Date	07/22/2014
First Named Inventor	Robert M. Burke II
Art Unit	2478
Examiner Name	Khajuria, Shripal K
Attorney Docket Number	1127.1001-453

Please change the Correspondence Address for the above-identified patent application to:

☒ The address associated with Customer Number: 143183

OR

☐ Firm or Individual Name

Address

City	State	Zip

Country

Telephone	Email

This form cannot be used to change the data associated with a Customer Number. To change the data associated with an existing Customer Number use "Request for Customer Number Data Change" (PTO/SB/124).

I am the:

☐ Applicant

☒ Attorney or agent of record. Registration Number 54,517

☐ Registered practitioner named in the application transmittal papers who acts in a representative capacity under 37 CFR 1.34. See 37 CFR 1.33(a)(1). Registration Number _____

Signature

Typed or Printed Name: Michael L. Wach

Date: Sept. 6, 2016 Telephone: 770-846-9238

NOTE: This form must be signed in accordance with 37 CFR 1.33. See 37 CFR 1.4(d) for signature requirements and certifications.
Submit multiple forms if more than one signature is required, see below*.

☒ *Total of 1 forms are submitted.

This collection of information is required by 37 CFR 1.33. The information is required to obtain or retain a benefit by the public which is to file (and by the USPTO to process) an application. Confidentiality is governed by 35 U.S.C. 122 and 37 CFR 1.11 and 1.14. This collection is estimated to take 3 minutes to complete, including gathering, preparing, and submitting the completed application form to the USPTO. Time will vary depending upon the individual case. Any comments on the amount of time you require to complete this form and/or suggestions for reducing this burden, should be sent to the Chief Information Officer, U.S. Patent and Trademark Office, U.S. Department of Commerce, P.O. Box 1450, Alexandria, VA 22313-1450. DO NOT SEND FEES OR COMPLETED FORMS TO THIS ADDRESS. **SEND TO: Commissioner for Patents, P.O. Box 1450, Alexandria, VA 22313-1450.**

If you need assistance in completing the form, call 1-800-PTO-9199 and select option 2.

Electronic Patent Application Fee Transmittal

Application Number:	14338240
Filing Date:	22-Jul-2014
Title of Invention:	SYSTEM FOR REGULATING ACCESS TO AND DISTRIBUTING CONTENT IN A NETWORK
First Named Inventor/Applicant Name:	Robert M. Burke
Filer:	Michael L. Wach
Attorney Docket Number:	123205-198706

Filed as Small Entity

Filing Fees for Utility under 35 USC 111(a)

Description	Fee Code	Quantity	Amount	Sub-Total in USD($)
Basic Filing:				
Pages:				
Claims:				
Miscellaneous-Filing:				
Petition:				
Patent-Appeals-and-Interference:				
Post-Allowance-and-Post-Issuance:				
Utility Appl Issue Fee	2501	1	480	480

Description	Fee Code	Quantity	Amount	Sub-Total in USD($)
Extension-of-Time:				
Miscellaneous:				
			Total in USD ($)	**480**

Electronic Acknowledgement Receipt

EFS ID:	26849032
Application Number:	14338240
International Application Number:	
Confirmation Number:	7564
Title of Invention:	SYSTEM FOR REGULATING ACCESS TO AND DISTRIBUTING CONTENT IN A NETWORK
First Named Inventor/Applicant Name:	Robert M. Burke
Customer Number:	60172
Filer:	Michael L. Wach
Filer Authorized By:	
Attorney Docket Number:	123205-198706
Receipt Date:	07-SEP-2016
Filing Date:	22-JUL-2014
Time Stamp:	00:24:40
Application Type:	Utility under 35 USC 111(a)

Payment information:

Submitted with Payment	yes
Payment Type	CARD
Payment was successfully received in RAM	$480
RAM confirmation Number	090716INTEFSW00312200
Deposit Account	0538
Authorized User	Michael Wach

The Director of the USPTO is hereby authorized to charge indicated fees and credit any overpayment as follows:

37 CFR 1.16 (National application filing, search, and examination fees)

37 CFR 1.17 (Patent application and reexamination processing fees)

37 CFR 1.19 (Document supply fees)

37 CFR 1.20 (Post Issuance fees)

37 CFR 1.21 (Miscellaneous fees and charges)

File Listing:

Document Number	Document Description	File Name	File Size(Bytes)/ Message Digest	Multi Part /.zip	Pages (if appl.)
1	Issue Fee Payment (PTO-85B)	1127-1001US3-IssueFee.pdf	279841 14a8eb9cc3d132c2996185526cc6ad092cba4729	no	1
Warnings:					
Information:					
2		1127-1001US3-POA.pdf	575096 20b506ef12e56e94cd49cc2385501da80dbd19a3	yes	2

	Multipart Description/PDF files in .zip description		
	Document Description	**Start**	**End**
	Power of Attorney	1	1
	Power of Attorney	2	2

Warnings:					
Information:					
3	Change of Address	1127-1001US3-Address.pdf	237508 45803d6863f9ae5788f9b4479a87eb6f329f5926	no	1
Warnings:					
Information:					
4	Fee Worksheet (SB06)	fee-info.pdf	30791 294ac96c28b80b5fe9143da15e067b119e57ed7d	no	2
Warnings:					
Information:					
		Total Files Size (in bytes):	1123236		

This Acknowledgement Receipt evidences receipt on the noted date by the USPTO of the indicated documents, characterized by the applicant, and including page counts, where applicable. It serves as evidence of receipt similar to a Post Card, as described in MPEP 503.

New Applications Under 35 U.S.C. 111

If a new application is being filed and the application includes the necessary components for a filing date (see 37 CFR 1.53(b)-(d) and MPEP 506), a Filing Receipt (37 CFR 1.54) will be issued in due course and the date shown on this Acknowledgement Receipt will establish the filing date of the application.

National Stage of an International Application under 35 U.S.C. 371

If a timely submission to enter the national stage of an international application is compliant with the conditions of 35 U.S.C. 371 and other applicable requirements a Form PCT/DO/EO/903 indicating acceptance of the application as a national stage submission under 35 U.S.C. 371 will be issued in addition to the Filing Receipt, in due course.

New International Application Filed with the USPTO as a Receiving Office

If a new international application is being filed and the international application includes the necessary components for an international filing date (see PCT Article 11 and MPEP 1810), a Notification of the International Application Number and of the International Filing Date (Form PCT/RO/105) will be issued in due course, subject to prescriptions concerning national security, and the date shown on this Acknowledgement Receipt will establish the international filing date of the application.

Electronic Acknowledgement Receipt

EFS ID:	26849032
Application Number:	14338240
International Application Number:	
Confirmation Number:	7564
Title of Invention:	SYSTEM FOR REGULATING ACCESS TO AND DISTRIBUTING CONTENT IN A NETWORK
First Named Inventor/Applicant Name:	Robert M. Burke
Customer Number:	60172
Filer:	Michael L. Wach
Filer Authorized By:	
Attorney Docket Number:	123205-198706
Receipt Date:	07-SEP-2016
Filing Date:	22-JUL-2014
Time Stamp:	00:24:40
Application Type:	Utility under 35 USC 111(a)

Payment information:

Submitted with Payment	yes
Payment Type	CARD
Payment was successfully received in RAM	$480
RAM confirmation Number	090716INTEFSW00312200
Deposit Account	600692
Authorized User	Michael Wach

The Director of the USPTO is hereby authorized to charge indicated fees and credit any overpayment as follows:

37 CFR 1.16 (National application filing, search, and examination fees)

37 CFR 1.17 (Patent application and reexamination processing fees)

37 CFR 1.19 (Document supply fees)

37 CFR 1.20 (Post Issuance fees)

37 CFR 1.21 (Miscellaneous fees and charges)

File Listing:

Document Number	Document Description	File Name	File Size(Bytes)/ Message Digest	Multi Part /.zip	Pages (if appl.)
1	Issue Fee Payment (PTO-85B)	1127-1001US3-IssueFee.pdf	279841 14a8eb9cc3d132c2996185526cc6ad092cba4729	no	1
Warnings:					
Information:					
2		1127-1001US3-POA.pdf	575096 20b506ef12e56e94cd49cc2385501da80dbd19a3	yes	2
	Multipart Description/PDF files in .zip description				
	Document Description		**Start**	**End**	
	Power of Attorney		1	1	
	Power of Attorney		2	2	
Warnings:					
Information:					
3	Change of Address	1127-1001US3-Address.pdf	237508 45803d6863f9ae5788f9b4479a87eb6f329f5926	no	1
Warnings:					
Information:					
4	Fee Worksheet (SB06)	fee-info.pdf	30791 294ac96c28b80b5fe9143da15e067b119e57ed7d	no	2
Warnings:					
Information:					
		Total Files Size (in bytes):	1123236		

This Acknowledgement Receipt evidences receipt on the noted date by the USPTO of the indicated documents, characterized by the applicant, and including page counts, where applicable. It serves as evidence of receipt similar to a Post Card, as described in MPEP 503.

New Applications Under 35 U.S.C. 111

If a new application is being filed and the application includes the necessary components for a filing date (see 37 CFR 1.53(b)-(d) and MPEP 506), a Filing Receipt (37 CFR 1.54) will be issued in due course and the date shown on this Acknowledgement Receipt will establish the filing date of the application.

National Stage of an International Application under 35 U.S.C. 371

If a timely submission to enter the national stage of an international application is compliant with the conditions of 35 U.S.C. 371 and other applicable requirements a Form PCT/DO/EO/903 indicating acceptance of the application as a national stage submission under 35 U.S.C. 371 will be issued in addition to the Filing Receipt, in due course.

New International Application Filed with the USPTO as a Receiving Office

If a new international application is being filed and the international application includes the necessary components for an international filing date (see PCT Article 11 and MPEP 1810), a Notification of the International Application Number and of the International Filing Date (Form PCT/RO/105) will be issued in due course, subject to prescriptions concerning national security, and the date shown on this Acknowledgement Receipt will establish the international filing date of the application.

UNITED STATES PATENT AND TRADEMARK OFFICE

UNITED STATES DEPARTMENT OF COMMERCE
United States Patent and Trademark Office
Address: COMMISSIONER FOR PATENTS
P.O. Box 1450
Alexandria, Virginia 22313-1450
www.uspto.gov

APPLICATION NUMBER	FILING OR 371(C) DATE	FIRST NAMED APPLICANT	ATTY. DOCKET NO./TITLE
14/338,240	07/22/2014	Robert M. Burke II	123205-198706

CONFIRMATION NO. 7564

POWER OF ATTORNEY NOTICE

60172
SCHWABE, WILLIAMSON & WYATT, P.C.
1420 FIFTH AVENUE, SUITE 3400
SEATTLE, WA 98101-4010

OC000000085654933

Date Mailed: 09/08/2016

NOTICE REGARDING CHANGE OF POWER OF ATTORNEY

This is in response to the Power of Attorney filed 09/07/2016.

- The Power of Attorney to you in this application has been revoked by the applicant. Future correspondence will be mailed to the new address of record(37 CFR 1.33).

Questions about the contents of this notice and the requirements it sets forth should be directed to the Office of Data Management, Application Assistance Unit, at **(571) 272-4000** or **(571) 272-4200** or **1-888-786-0101**.

/cnguyen/

UNITED STATES PATENT AND TRADEMARK OFFICE

UNITED STATES DEPARTMENT OF COMMERCE
United States Patent and Trademark Office
Address: COMMISSIONER FOR PATENTS
P.O. Box 1450
Alexandria, Virginia 22313-1450
www.uspto.gov

APPLICATION NUMBER	FILING OR 371(C) DATE	FIRST NAMED APPLICANT	ATTY. DOCKET NO./TITLE
14/338,240	07/22/2014	Robert M. Burke II	1127.1001-US3

CONFIRMATION NO. 7564

143183
Michael L. Wach
4425 Mariners Ridge
Alpharetta, GA 30005

POA ACCEPTANCE LETTER

OC000000085654985

Date Mailed: 09/08/2016

NOTICE OF ACCEPTANCE OF POWER OF ATTORNEY

This is in response to the Power of Attorney filed 09/07/2016.

The Power of Attorney in this application is accepted. Correspondence in this application will be mailed to the above address as provided by 37 CFR 1.33.

Questions about the contents of this notice and the requirements it sets forth should be directed to the Office of Data Management, Application Assistance Unit, at **(571) 272-4000** or **(571) 272-4200** or **1-888-786-0101**.

/cnguyen/

UNITED STATES PATENT AND TRADEMARK OFFICE

UNITED STATES DEPARTMENT OF COMMERCE
United States Patent and Trademark Office
Address: COMMISSIONER FOR PATENTS
P.O. Box 1450
Alexandria, Virginia 22313-1450
www.uspto.gov

APPLICATION NO.	ISSUE DATE	PATENT NO.	ATTORNEY DOCKET NO.	CONFIRMATION NO.
14/338,240	10/11/2016	9465925	1127.1001-US3	7564

143183 7590 09/21/2016

Michael L. Wach
4425 Mariners Ridge
Alpharetta, GA 30005

ISSUE NOTIFICATION

The projected patent number and issue date are specified above.

Determination of Patent Term Adjustment under 35 U.S.C. 154 (b)
(application filed on or after May 29, 2000)

The Patent Term Adjustment is 90 day(s). Any patent to issue from the above-identified application will include an indication of the adjustment on the front page.

If a Continued Prosecution Application (CPA) was filed in the above-identified application, the filing date that determines Patent Term Adjustment is the filing date of the most recent CPA.

Applicant will be able to obtain more detailed information by accessing the Patent Application Information Retrieval (PAIR) WEB site (http://pair.uspto.gov).

Any questions regarding the Patent Term Extension or Adjustment determination should be directed to the Office of Patent Legal Administration at (571)-272-7702. Questions relating to issue and publication fee payments should be directed to the Application Assistance Unit (AAU) of the Office of Data Management (ODM) at (571)-272-4200.

APPLICANT(s) (Please see PAIR WEB site http://pair.uspto.gov for additional applicants):

Robert M. Burke II, Los Gatos, CA;
David Z. Carman, Tulsa, OK;

The United States represents the largest, most dynamic marketplace in the world and is an unparalleled location for business investment, innovation, and commercialization of new technologies. The USA offers tremendous resources and advantages for those who invest and manufacture goods here. Through SelectUSA, our nation works to encourage and facilitate business investment. To learn more about why the USA is the best country in the world to develop technology, manufacture products, and grow your business, visit SelectUSA.gov.

AO 120 (Rev. 08/10)

TO:	REPORT ON THE FILING OR DETERMINATION OF AN ACTION REGARDING A PATENT OR TRADEMARK
Mail Stop 8 Director of the U.S. Patent and Trademark Office P.O. Box 1450 Alexandria, VA 22313-1450	

In Compliance with 35 U.S.C. § 290 and/or 15 U.S.C. § 1116 you are hereby advised that a court action has been filed in the U.S. District Court Eastern District of Texas, Marshall Division on the following

☐ Trademarks or ☑ Patents. (☐ the patent action involves 35 U.S.C. § 292.):

DOCKET NO.	DATE FILED	U.S. DISTRICT COURT
2:17-cv-191	3/10/2017	Eastern District of Texas, Marshall Division

PLAINTIFF	DEFENDANT
CATONIAN IP MANAGEMENT, LLC	CHARTER COMMUNICATIONS, INC., TIME WARNER CABLE, LLC, TIME WARNER CABLE ENTERPRISES LLC, AND TIME WARNER CABLE TEXAS LLC

	PATENT OR TRADEMARK NO.	DATE OF PATENT OR TRADEMARK	HOLDER OF PATENT OR TRADEMARK
1	8,799,468	8/5/2014	CATONIAN IP MANAGEMENT, LLC
2	9,465,925	10/11/2016	CATONIAN IP MANAGEMENT, LLC
3			
4			
5			

In the above—entitled case, the following patent(s)/ trademark(s) have been included:

DATE INCLUDED	INCLUDED BY ☐ Amendment ☐ Answer ☐ Cross Bill ☐ Other Pleading	
PATENT OR TRADEMARK NO.	DATE OF PATENT OR TRADEMARK	HOLDER OF PATENT OR TRADEMARK
1		
2		
3		
4		
5		

In the above—entitled case, the following decision has been rendered or judgement issued:

DECISION/JUDGEMENT

CLERK	(BY) DEPUTY CLERK	DATE

Copy 1—Upon initiation of action, mail this copy to Director **Copy 3—Upon termination of action, mail this copy to Director**
Copy 2—Upon filing document adding patent(s), mail this copy to Director **Copy 4—Case file copy**

AO 120 (Rev. 08/10)

TO:	REPORT ON THE FILING OR DETERMINATION OF AN ACTION REGARDING A PATENT OR TRADEMARK
Mail Stop 8 **Director of the U.S. Patent and Trademark Office** **P.O. Box 1450** **Alexandria, VA 22313-1450**	

In Compliance with 35 U.S.C. § 290 and/or 15 U.S.C. § 1116 you are hereby advised that a court action has been filed in the U.S. District Court Eastern District of Texas, Marshall Division on the following

☐ Trademarks or ☑ Patents. (☐ the patent action involves 35 U.S.C. § 292.):

DOCKET NO.	DATE FILED	U.S. DISTRICT COURT
2:17-cv-190	3/10/2017	Eastern District of Texas, Marshall Division

PLAINTIFF	DEFENDANT
CATONIAN IP MANAGEMENT, LLC	CEQUEL COMMUNICATIONS, LLC, AND NEPTUNE HOLDING US CORP.

	PATENT OR TRADEMARK NO.	DATE OF PATENT OR TRADEMARK	HOLDER OF PATENT OR TRADEMARK
1	8,799,468	8/5/2014	CATONIAN IP MANAGEMENT, LLC
2	9,465,925	10/11/2016	CATONIAN IP MANAGEMENT, LLC
3			
4			
5			

In the above—entitled case, the following patent(s)/ trademark(s) have been included:

DATE INCLUDED	INCLUDED BY ☐ Amendment ☐ Answer ☐ Cross Bill ☐ Other Pleading	
PATENT OR TRADEMARK NO.	DATE OF PATENT OR TRADEMARK	HOLDER OF PATENT OR TRADEMARK
1		
2		
3		
4		
5		

In the above—entitled case, the following decision has been rendered or judgement issued:

DECISION/JUDGEMENT

CLERK	(BY) DEPUTY CLERK	DATE

Copy 1—Upon initiation of action, mail this copy to Director **Copy 3—Upon termination of action, mail this copy to Director**
Copy 2—Upon filing document adding patent(s), mail this copy to Director **Copy 4—Case file copy**

AO 120 (Rev. 08/10)

TO:	REPORT ON THE FILING OR DETERMINATION OF AN ACTION REGARDING A PATENT OR TRADEMARK
Mail Stop 8 Director of the U.S. Patent and Trademark Office P.O. Box 1450 Alexandria, VA 22313-1450	

In Compliance with 35 U.S.C. § 290 and/or 15 U.S.C. § 1116 you are hereby advised that a court action has been filed in the U.S. District Court Eastern District of Texas, Marshall Division on the following

☐ Trademarks or ☑ Patents. (☐ the patent action involves 35 U.S.C. § 292.):

DOCKET NO.	DATE FILED	U.S. DISTRICT COURT
2:17-cv-190	3/10/2017	Eastern District of Texas, Marshall Division

PLAINTIFF	DEFENDANT
CATONIAN IP MANAGEMENT, LLC	CEQUEL COMMUNICATIONS, LLC, AND NEPTUNE HOLDING US CORP.

	PATENT OR TRADEMARK NO.	DATE OF PATENT OR TRADEMARK	HOLDER OF PATENT OR TRADEMARK
1	8,799,468	8/5/2014	CATONIAN IP MANAGEMENT, LLC
2	9,465,925	10/11/2016	CATONIAN IP MANAGEMENT, LLC
3			
4			
5			

In the above—entitled case, the following patent(s)/ trademark(s) have been included:

DATE INCLUDED	INCLUDED BY ☐ Amendment ☐ Answer ☐ Cross Bill ☐ Other Pleading	
PATENT OR TRADEMARK NO.	DATE OF PATENT OR TRADEMARK	HOLDER OF PATENT OR TRADEMARK
1		
2		
3		
4		
5		

In the above—entitled case, the following decision has been rendered or judgement issued:

DECISION/JUDGEMENT

CLERK	(BY) DEPUTY CLERK	DATE

Copy 1—Upon initiation of action, mail this copy to Director Copy 3—Upon termination of action, mail this copy to Director
Copy 2—Upon filing document adding patent(s), mail this copy to Director Copy 4—Case file copy

AO 120 (Rev. 08/10)

TO:	REPORT ON THE FILING OR DETERMINATION OF AN ACTION REGARDING A PATENT OR TRADEMARK
Mail Stop 8 **Director of the U.S. Patent and Trademark Office** **P.O. Box 1450** **Alexandria, VA 22313-1450**	

In Compliance with 35 U.S.C. § 290 and/or 15 U.S.C. § 1116 you are hereby advised that a court action has been filed in the U.S. District Court Eastern District of Texas, Marshall Division on the following

☐ Trademarks or ☑ Patents. (☐ the patent action involves 35 U.S.C. § 292.):

DOCKET NO.	DATE FILED	U.S. DISTRICT COURT
2:17-cv-191	3/10/2017	Eastern District of Texas, Marshall Division

PLAINTIFF	DEFENDANT
CATONIAN IP MANAGEMENT, LLC	CHARTER COMMUNICATIONS, INC., TIME WARNER CABLE, LLC, TIME WARNER CABLE ENTERPRISES LLC, AND TIME WARNER CABLE TEXAS LLC

	PATENT OR TRADEMARK NO.	DATE OF PATENT OR TRADEMARK	HOLDER OF PATENT OR TRADEMARK
1	8,799,468	8/5/2014	CATONIAN IP MANAGEMENT, LLC
2	9,465,925	10/11/2016	CATONIAN IP MANAGEMENT, LLC
3			
4			
5			

In the above—entitled case, the following patent(s)/ trademark(s) have been included:

DATE INCLUDED	INCLUDED BY ☐ Amendment ☐ Answer ☐ Cross Bill ☐ Other Pleading	
PATENT OR TRADEMARK NO.	DATE OF PATENT OR TRADEMARK	HOLDER OF PATENT OR TRADEMARK
1		
2		
3		
4		
5		

In the above—entitled case, the following decision has been rendered or judgement issued:

DECISION/JUDGEMENT

CLERK	(BY) DEPUTY CLERK	DATE

Copy 1—Upon initiation of action, mail this copy to Director **Copy 3—Upon termination of action, mail this copy to Director**
Copy 2—Upon filing document adding patent(s), mail this copy to Director **Copy 4—Case file copy**

PATENT ASSIGNMENT COVER SHEET

Electronic Version v1.1
Stylesheet Version v1.2

EPAS ID: PAT4644070

SUBMISSION TYPE:	NEW ASSIGNMENT
NATURE OF CONVEYANCE:	ASSIGNMENT

CONVEYING PARTY DATA

Name	Execution Date
CATONIAN IP MANAGEMENT	10/17/2017

RECEIVING PARTY DATA

Name:	MULTIMEDIA CONTENT MANAGEMENT LLC
Street Address:	10025 HYDE PLACE
City:	NEW ORLEANS
State/Country:	LOUISIANA
Postal Code:	70123

PROPERTY NUMBERS Total: 4

Property Type	Number
Patent Number:	8122128
Patent Number:	8799468
Patent Number:	9465925
Application Number:	15258991

CORRESPONDENCE DATA

Fax Number:

Correspondence will be sent to the e-mail address first; if that is unsuccessful, it will be sent using a fax number, if provided; if that is unsuccessful, it will be sent via US Mail.

Email: jason@ipval.com
Correspondent Name: JASON BOURGEOIS
Address Line 1: 1619 NASHVILLE AVENUE
Address Line 4: NEW ORLEANS, LOUISIANA 70115

NAME OF SUBMITTER:	JASON BOURGEOIS
SIGNATURE:	/Jason Bourgeois/
DATE SIGNED:	10/17/2017
	This document serves as an Oath/Declaration (37 CFR 1.63).

Total Attachments: 2
source=ASSIGNMENT TO MCM#page1.tif
source=ASSIGNMENT TO MCM#page2.tif

ASSIGNMENT OF PATENT RIGHTS

For good and valuable consideration, the receipt of which is hereby acknowledged, Catonian IP Management LLC (***"Assignor"***), does hereby sell, assign, transfer, and convey unto Multimedia Content Management LLC (***"Assignee"***), or its designees, all right, title, and interest that exist today and may exist in the future in and to any and all of the following (collectively, the ***"Patent Rights"***):

(a) the patent applications and patents listed in the table below (the "***Patents***");

Patent or Application No.	Country	Filing Date	Title of Patent and First Named Inventor
8,122,128	U.S.	11/16/2004	System for regulating access to and distributing content in a network; Burke
8,799,468	U.S.	02/08/2012	System for regulating access to and distributing content in a network; Burke
9,465,925	U.S.	07/22/2014	System for regulating access to and distributing content in a network; Burke
15/258,991	U.S.	09/07/2016	System for regulating access to and distributing content in a network; Burke

(b) all patents and patent applications (i) to which the Patent directly or indirectly claims priority, (ii) for which the Patent directly or indirectly forms a basis for priority, and/or (iii) that were co-owned applications that directly or indirectly incorporate by reference, or were incorporated by reference into, the Patent;

(c) all reissues, reexaminations, extensions, continuations, continuations in part, continuing prosecution applications, requests for continuing examinations, divisions, registrations of any item in any of the foregoing categories (a) and (b);

(d) all inventions, invention disclosures, and discoveries described in any item in any of the foregoing categories (a) through (c) and all other rights arising out of such inventions, invention disclosures, and discoveries;

(e) all rights to apply in any or all countries of the world for patents, certificates of invention, utility models, industrial design protections, design patent protections, or other governmental grants or issuances of any type related to any item in any of the foregoing categories (a) through (d), including, without limitation, under the Paris Convention for the Protection of Industrial Property, the International Patent Cooperation Treaty, or any other convention, treaty, agreement, or understanding;

(f) all causes of action (whether known or unknown or whether currently pending, filed, or otherwise) and other enforcement rights under, or on account of, the Patent and/or any item in any of the foregoing categories (b) through (e), including, without limitation, all causes of action and other enforcement rights for (i) past, present, and future damages, (ii) injunctive relief, and (iii) any other remedies of any kind for past, present, and future infringement; and

(g) all rights to collect royalties and other payments under or on account of the Patent and/or any item in any of the foregoing categories (a) through (f).

Assignor represents, warrants and covenants that:

(1) Assignor has the full power and authority, and has obtained all third party consents, approvals and/or other authorizations required to enter into the Letter Agreement and to carry out its obligations hereunder, including the assignment of the Patent Rights to Assignee; and

(2) Assignor owns, and by this document assigns to Assignee, all right, title, and interest to the Patent Rights, including, without limitation, all right, title, and interest to sue for infringement of the Patent Rights. Assignor has obtained and properly recorded previously executed assignments for the Patent Rights as necessary to fully perfect its rights and title therein in accordance with governing law and regulations in each respective jurisdiction. The Patent Rights are free and clear of all liens, claims, mortgages, security interests or other encumbrances, and restrictions. There are no actions, suits, investigations, claims or proceedings threatened, pending or in progress relating in any way to the Patent Rights. There are no existing contracts, agreements, options, commitments, proposals, bids, offers, or rights with, to, or in any person to acquire any of the Patent Rights.

Assignor hereby authorizes the respective patent office or governmental agency in each jurisdiction to issue any and all patents, certificates of invention, utility models or other governmental grants or issuances that may be granted upon any of the Patent Rights in the name of Assignee, as the assignee to the entire interest therein.

Assignor will, at the reasonable request of Assignee and without demanding any further consideration therefore, do all things necessary, proper, or advisable, including without limitation, the execution, acknowledgment, and recordation of specific assignments, oaths, declarations, and other documents on a country-by-country basis, to assist Assignee in obtaining, perfecting, sustaining, and/or enforcing the Patent Rights. Such assistance will include providing, and obtaining from the respective inventors, prompt production of pertinent facts and documents, giving of testimony, execution of petitions, oaths, powers of attorney, specifications, declarations or other papers, and other assistance reasonably necessary for filing patent applications, complying with any duty of disclosure, and conducting prosecution, reexamination, reissue, interference or other priority proceedings, opposition proceedings, cancellation proceedings, public use proceedings, infringement or other court actions and the like with respect to the Patent Rights.

The terms and conditions of this Assignment of Patent Rights will inure to the benefit of Assignee, its successors, assigns, and other legal representatives and will be binding upon Assignor, its successors, assigns, and other legal representatives.

ASSIGNOR:

By: Jason Bourgeois

Catonian IP Management LLC

Jason Bourgeois, Member

Date: 10/17/2017

AO 120 (Rev. 08/10)

TO:	Mail Stop 8 Director of the U.S. Patent and Trademark Office P.O. Box 1450 Alexandria, VA 22313-1450	REPORT ON THE FILING OR DETERMINATION OF AN ACTION REGARDING A PATENT OR TRADEMARK

In Compliance with 35 U.S.C. § 290 and/or 15 U.S.C. § 1116 you are hereby advised that a court action has been filed in the U.S. District Court Eastern District of Texas, Marshall Division on the following

☐ Trademarks or ☑ Patents. (☐ the patent action involves 35 U.S.C. § 292.):

DOCKET NO.	DATE FILED	U.S. DISTRICT COURT
2:17-cv-190	3/10/2017	Eastern District of Texas, Marshall Division

PLAINTIFF	DEFENDANT
CATONIAN IP MANAGEMENT, LLC	CEQUEL COMMUNICATIONS, LLC, AND NEPTUNE HOLDING US CORP.

	PATENT OR TRADEMARK NO.	DATE OF PATENT OR TRADEMARK	HOLDER OF PATENT OR TRADEMARK
1	8,799,468	8/5/2014	CATONIAN IP MANAGEMENT, LLC
2	9,465,925	10/11/2016	CATONIAN IP MANAGEMENT, LLC
3			
4			
5			

In the above—entitled case, the following patent(s)/ trademark(s) have been included:

DATE INCLUDED	INCLUDED BY ☐ Amendment ☐ Answer ☐ Cross Bill ☐ Other Pleading	
PATENT OR TRADEMARK NO.	DATE OF PATENT OR TRADEMARK	HOLDER OF PATENT OR TRADEMARK
1		
2		
3		
4		
5		

In the above—entitled case, the following decision has been rendered or judgement issued:

DECISION/JUDGEMENT

CLERK	(BY) DEPUTY CLERK	DATE

Copy 1—Upon initiation of action, mail this copy to Director **Copy 3—Upon termination of action, mail this copy to Director**
Copy 2—Upon filing document adding patent(s), mail this copy to Director **Copy 4—Case file copy**

AO 120 (Rev. 08/10)

TO:	Mail Stop 8 Director of the U.S. Patent and Trademark Office P.O. Box 1450 Alexandria, VA 22313-1450	REPORT ON THE FILING OR DETERMINATION OF AN ACTION REGARDING A PATENT OR TRADEMARK

In Compliance with 35 U.S.C. § 290 and/or 15 U.S.C. § 1116 you are hereby advised that a court action has been filed in the U.S. District Court Eastern District of Texas, Marshall Division on the following

☐ Trademarks or ☑ Patents. (☐ the patent action involves 35 U.S.C. § 292.):

DOCKET NO.	DATE FILED	U.S. DISTRICT COURT
2:17-cv-191	3/10/2017	Eastern District of Texas, Marshall Division

PLAINTIFF	DEFENDANT
CATONIAN IP MANAGEMENT, LLC	CHARTER COMMUNICATIONS, INC., TIME WARNER CABLE, LLC, TIME WARNER CABLE ENTERPRISES LLC, AND TIME WARNER CABLE TEXAS LLC

	PATENT OR TRADEMARK NO.	DATE OF PATENT OR TRADEMARK	HOLDER OF PATENT OR TRADEMARK
1	8,799,468	8/5/2014	CATONIAN IP MANAGEMENT, LLC
2	9,465,925	10/11/2016	CATONIAN IP MANAGEMENT, LLC
3			
4			
5			

In the above—entitled case, the following patent(s)/ trademark(s) have been included:

DATE INCLUDED	INCLUDED BY ☐ Amendment ☐ Answer ☐ Cross Bill ☐ Other Pleading	
PATENT OR TRADEMARK NO.	DATE OF PATENT OR TRADEMARK	HOLDER OF PATENT OR TRADEMARK
1		
2		
3		
4		
5		

In the above—entitled case, the following decision has been rendered or judgement issued:

DECISION/JUDGEMENT

CLERK	(BY) DEPUTY CLERK	DATE

Copy 1—Upon initiation of action, mail this copy to Director **Copy 3—Upon termination of action, mail this copy to Director**
Copy 2—Upon filing document adding patent(s), mail this copy to Director **Copy 4—Case file copy**