US006791119B2

(12) **United States Patent**
Slater, Jr. et al.

(10) **Patent No.: US 6,791,119 B2**
(45) **Date of Patent: Sep. 14, 2004**

(54) **LIGHT EMITTING DIODES INCLUDING MODIFICATIONS FOR LIGHT EXTRACTION**

(75) Inventors: **David B. Slater, Jr.**, Raleigh, NC (US); **Robert C. Glass**, Chapel Hill, NC (US); **Charles M. Swoboda**, Morrisville, NC (US); **Bernd Keller**, Goleta, CA (US); **James Ibbetson**, Goleta, CA (US); **Brian Thibeault**, Santa Barbara, CA (US); **Eric J. Tarsa**, Goleta, CA (US)

(73) Assignee: **Cree, Inc.**, Durham, NC (US)

(*) Notice: Subject to any disclaimer, the term of this patent is extended or adjusted under 35 U.S.C. 154(b) by 0 days.

(21) Appl. No.: **10/057,821**

(22) Filed: **Jan. 25, 2002**

(65) **Prior Publication Data**

US 2002/0123164 A1 Sep. 5, 2002

Related U.S. Application Data

(60) Provisional application No. 60/307,235, filed on Jul. 23, 2001, and provisional application No. 60/265,707, filed on Feb. 1, 2001.

(51) **Int. Cl.**[7] **H01L 33/00**

(52) **U.S. Cl.** **257/99**; 257/95; 257/98

(58) **Field of Search** 257/95, 98, 99

(56) **References Cited**

U.S. PATENT DOCUMENTS

4,918,497	A	4/1990	Edmond	357/17
4,966,862	A	10/1990	Edmond	437/100
5,006,908	A	4/1991	Matsuoka et al.	357/17
5,027,168	A	6/1991	Edmond	357/17
5,087,949	A	2/1992	Haitz	357/17
5,187,547	A	2/1993	Niina et al.	257/77
5,210,051	A	5/1993	Carter, Jr.	437/107
5,237,182	A	8/1993	Kitagawa et al.	257/15

(List continued on next page.)

FOREIGN PATENT DOCUMENTS

EP	0 051 172	5/1982
EP	0 961 328 A2	12/1999
EP	1 168 460 A2	1/2002
GB	2 346 480 A	8/2000
JP	56-131977	10/1981

(List continued on next page.)

OTHER PUBLICATIONS

OSRAM Enhances Brightness of Blue InGaN LEDs, Compound Semiconductor, vol. 7, No. 1, Feb. 2001, p. 7.

Craford, *Outlook for AlInGaP Technology*, Presentation, Strategies in Light 2000.

Krames et al., *High–Power Truncated–Inverted–Pyramid* $(Al_xGa_{1-x})_{0.5}In_{0.5}P/GaP$ *Light–Emitting Diodes Exhibiting > 55External Quantum Efficiency*, Applied Physics Letters, vol. 75, No. 16, Oct. 18, 1999, pp. 2365–2367.

(List continued on next page.)

Primary Examiner—Jerome Jackson

(74) *Attorney, Agent, or Firm*—Myers Bigel Sibley & Sajovec

(57) **ABSTRACT**

Light emitting diodes include a substrate having first and second opposing faces and that is transparent to optical radiation in a predetermined wavelength range and that is patterned to define, in cross-section, a plurality of pedestals that extend into the substrate from the first face towards the second face. A diode region on the second face is configured to emit light in the predetermined wavelength range, into the substrate upon application of voltage across the diode region. A mounting support on the diode region, opposite the substrate is configured to support the diode region, such that the light that is emitted from the diode region into the substrate, is emitted from the first face upon application of voltage across the diode region. The first face of the substrate may include therein a plurality of grooves that define the plurality of triangular pedestals in the substrate. The grooves may include tapered sidewalls and/or a beveled floor. The first face of the substrate also may include therein an array of via holes. The via holes may include tapered sidewalls and/or a floor.

104 Claims, 15 Drawing Sheets

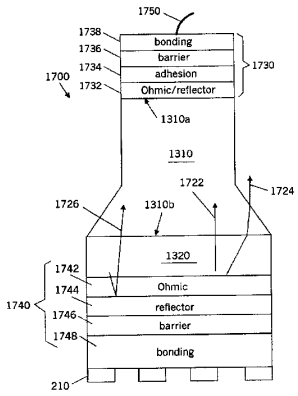

U.S. PATENT DOCUMENTS

5,247,533	A		9/1993	Okazaki et al.	372/45
5,338,994	A		8/1994	Lezan et al.	307/86
5,369,289	A		11/1994	Tamaki et al.	257/99
5,393,993	A		2/1995	Edmond et al.	257/77
5,416,342	A		5/1995	Edmond et al.	257/76
5,523,589	A		6/1996	Edmond et al.	257/77
5,585,648	A		12/1996	Tischler	257/77
5,604,135	A		2/1997	Edmond et al.	437/22
5,631,190	A		5/1997	Negley	438/33
5,718,760	A		2/1998	Carter et al.	117/84
5,739,554	A		4/1998	Edmond et al.	257/103
5,760,479	A		6/1998	Yang et al.	
5,767,581	A		6/1998	Nakamura et al.	257/749
5,777,350	A		7/1998	Nakamura et al.	257/96
5,779,924	A		7/1998	Krames et al.	216/24
5,846,694	A	*	12/1998	Strand et al.	430/321
5,912,477	A		6/1999	Negley	257/95
5,917,202	A		6/1999	Haitz et al.	257/98
5,952,681	A		9/1999	Chen	257/89
6,015,719	A		1/2000	Kish, Jr. et al.	438/29
6,031,243	A	*	2/2000	Taylor	257/98
6,046,465	A		4/2000	Wang et al.	257/98
6,091,085	A		7/2000	Lester	257/98
6,097,041	A		8/2000	Lin et al.	257/98
6,118,259	A		9/2000	Bucks et al.	323/312
6,120,600	A		9/2000	Edmond et al.	117/89
6,121,636	A		9/2000	Morita et al.	257/99
6,121,637	A		9/2000	Isokawa et al.	257/99
6,133,589	A		10/2000	Krames et al.	257/103
6,139,166	A		10/2000	Marshall et al.	362/231
6,147,458	A		11/2000	Bucks et al.	325/225
6,169,294	B1		1/2001	Biing-Jye et al.	257/79
6,177,688	B1		1/2001	Linthicum et al.	257/77
6,187,606	B1		2/2001	Edmond et al.	438/46
6,194,742	B1		2/2001	Kern et al.	257/94
6,201,264	B1		3/2001	Khare et al.	257/97
6,204,523	B1		3/2001	Carey et al.	257/98
6,222,207	B1		4/2001	Carter-Coman et al.	257/98
6,229,160	B1		5/2001	Krames et al.	257/94
6,455,878	B1		9/2002	Bhat et al.	257/99
2003/0006418	A1		1/2003	Emerson et al.	257/79
2003/0025212	A1		2/2003	Bhat et al.	

FOREIGN PATENT DOCUMENTS

JP	61110476		5/1986
JP	1-225377		9/1989
JP	06-232510		8/1994
JP	07-235729		9/1995
JP	08-321660		12/1996
JP	9-82587		3/1997
JP	09-223846		8/1997
JP	10-163530		6/1998
JP	10-233549		9/1998
JP	10-256604		9/1998
JP	11-150302	A	6/1999
JP	11-191641		7/1999
JP	11-220168	A	8/1999
JP	2000-77713	A	3/2000
JP	2000-195827		7/2000
WO	WO 00/33365		6/2000
WO	WO 01/47039	A1	6/2001

OTHER PUBLICATIONS

Lambrecht et al., *Band Structure Interpretation of the Optical Transitions Between Low–Lying Conduction Bands in n–Type Doped SiC Polytypes*, Materials Science Forum, vols. 264–268, 1998, pp. 271–274.

Craford, *Overview of Device Issues in High–Brightness Light–Emitting Diodes*, Chapter 2, *High Brightness Light Emitting Diodes: Semiconductors and Semimetals*, vol. 48, Stringfellow et al. ed., Academic Press, 1997, pp. 47–63.

Yoo et al., *Bulk Crystal Growth of 6H–SiC on Polytype–Controlled Substrates Through Vapor Phase and Characterization*, Journal of Crystal Growth, vol. 115, vol. 1991, pp. 733–739.

Biederman, *The Optical Absorption Bands and Their Anisotropy in the Various Modifications of SiC*, Solid State Communications, vol. 3, 1965, pp. 343–346.

U.S. application Ser. No. 09/154,363, entitled *Vertical Geometry InGaN LED*.

U.S. application Ser. No. 60,411,980, filed Sep. 19, 2002, *Phosphor–Coated Light Emitting Diodes Including Tapered Sidewalls, and Fabrication Methods*.

U.S. application Ser. No. 10/003,331, filed Oct. 31, 2001, *Low Temperature Formation of Backside Ohmic Contacts for Vertical Devices*.

U.S. application Ser. No. 60/294,445, filed May 30, 2001, *Multi–Quantum Well Light Emitting Diode Structure*.

U.S. application Ser. No. 60/294,378, filed May 30, 2001, *Light Emitting Diode Structure With Multi–Quantum Well and Superlattice Structure*.

U.S. application Ser. No. 60/294,308, filed May 30, 2001, *Light Emitting Diode Structure With Superlattice Structure*.

U.S. application Ser. No. 09/787,189, filed Mar. 15, 2001, *Low Temperature Formation of Backside Ohmic Contacts for Vertical Devices*.

Invitation to Pay Additional Fees, Annex to Form PCT/ISA/206, Communication Relating to the Results of the Partial International Search, PCT/US02/02849, Aug. 26, 2002.

International Search Report, PCT/US02/02849, Dec. 2, 2002.

Mensz et al., *$In_xGA_{1-x}N/Al_yGA_{1-y}N$ Violet Light Emitting Diodes with Reflective p–Contacts for High Single Sided Light Extraction,* Electronics Letters, vol. 33, No. 24, Nov. 20, 1997, pp. 2066–2068.

Honma et al., *Evaluation of Barrier Metals of Solder Bumps for Flip–Chip Interconnection*, Electronic Manufacturing Technology Symposium, 1995, Proceedings of 1995 Japan International, 18th IEEE/CPMT, Dec. 4, 1995, pp. 113–116.

Lee et al., *Bonding of InP Laser Diodes by Au–Sn Solder and Tungsten–Based Barrier Metallization Schemes*, Semiconductor Science and Technology, vol. 9, No. 4, Apr. 1994, pp. 379–386.

* cited by examiner

FIG. 1

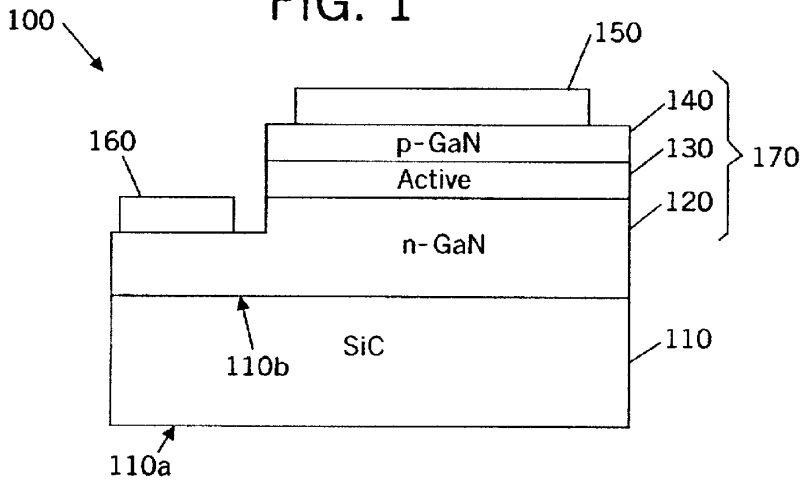

FIG. 2

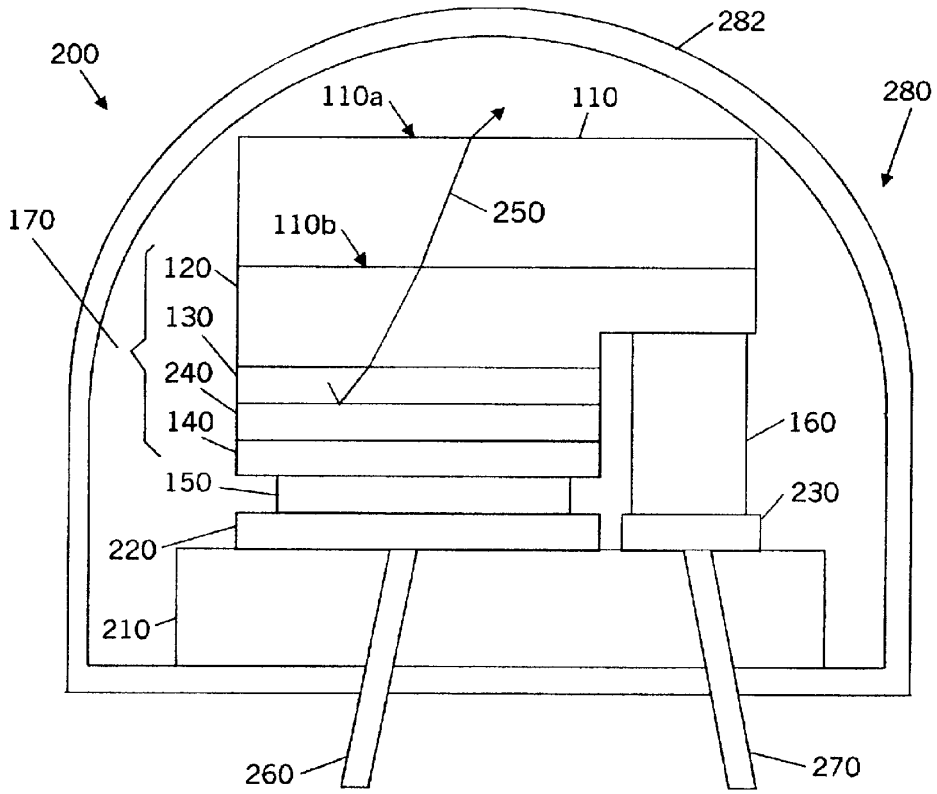

FIG. 3

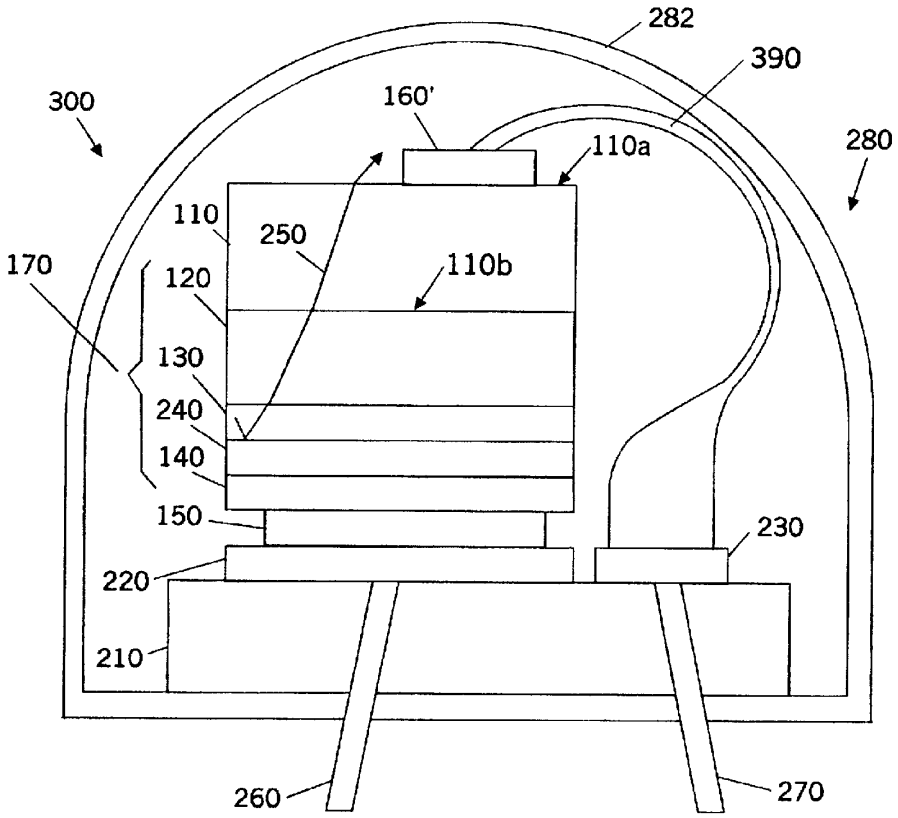

FIG. 13

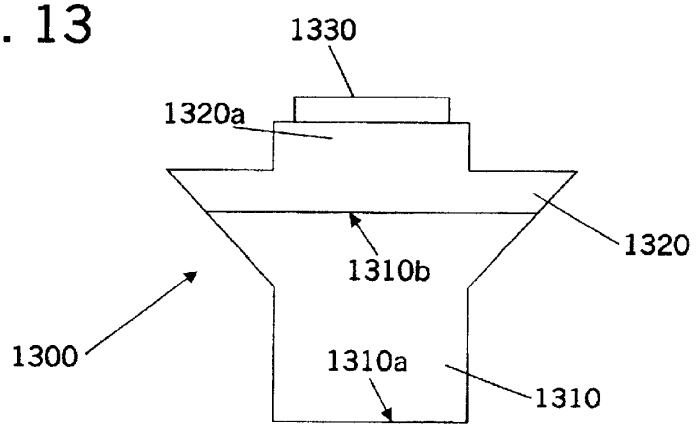

FIG. 4

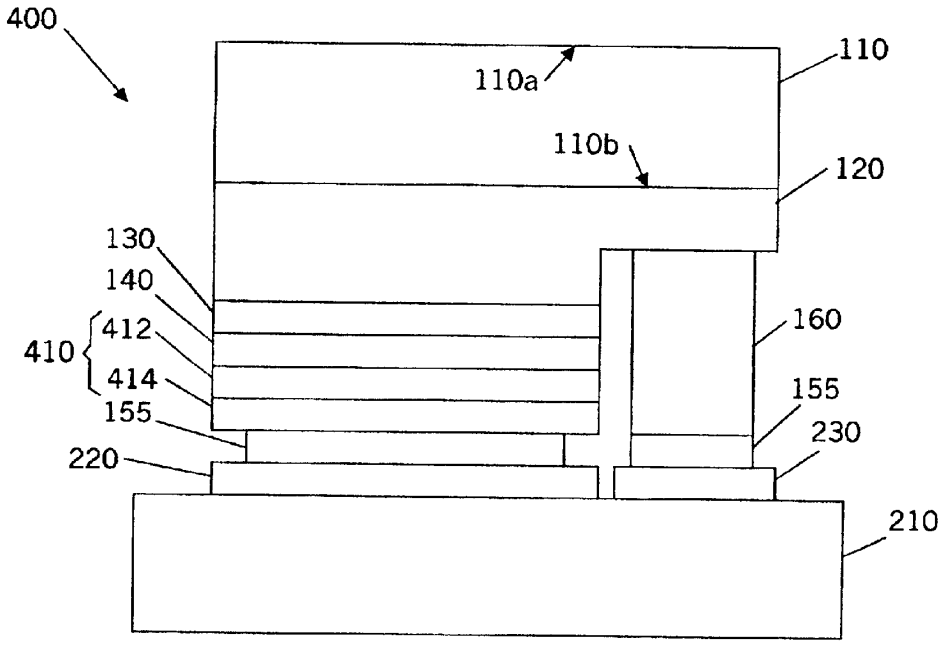

FIG. 5

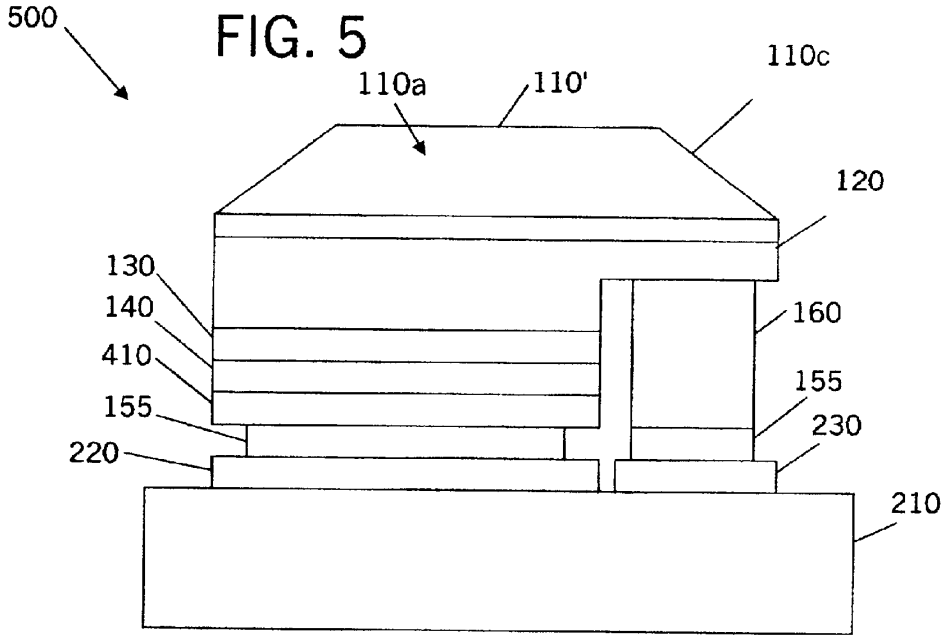

DOCKET ALARM

Explore Litigation Insights

Docket Alarm provides insights to develop a more informed litigation strategy and the peace of mind of knowing you're on top of things.

Real-Time Litigation Alerts

Keep your litigation team up-to-date with **real-time alerts** and advanced team management tools built for the enterprise, all while greatly reducing PACER spend.

Our comprehensive service means we can handle Federal, State, and Administrative courts across the country.

Advanced Docket Research

With over 230 million records, Docket Alarm's cloud-native docket research platform finds what other services can't. Coverage includes Federal, State, plus PTAB, TTAB, ITC and NLRB decisions, all in one place.

Identify arguments that have been successful in the past with full text, pinpoint searching. Link to case law cited within any court document via Fastcase.

Analytics At Your Fingertips

Learn what happened the last time a particular judge, opposing counsel or company faced cases similar to yours.

Advanced out-of-the-box PTAB and TTAB analytics are always at your fingertips.

API

Docket Alarm offers a powerful API (application programming interface) to developers that want to integrate case filings into their apps.

LAW FIRMS

Build custom dashboards for your attorneys and clients with live data direct from the court.

Automate many repetitive legal tasks like conflict checks, document management, and marketing.

FINANCIAL INSTITUTIONS

Litigation and bankruptcy checks for companies and debtors.

E-DISCOVERY AND LEGAL VENDORS

Sync your system to PACER to automate legal marketing.