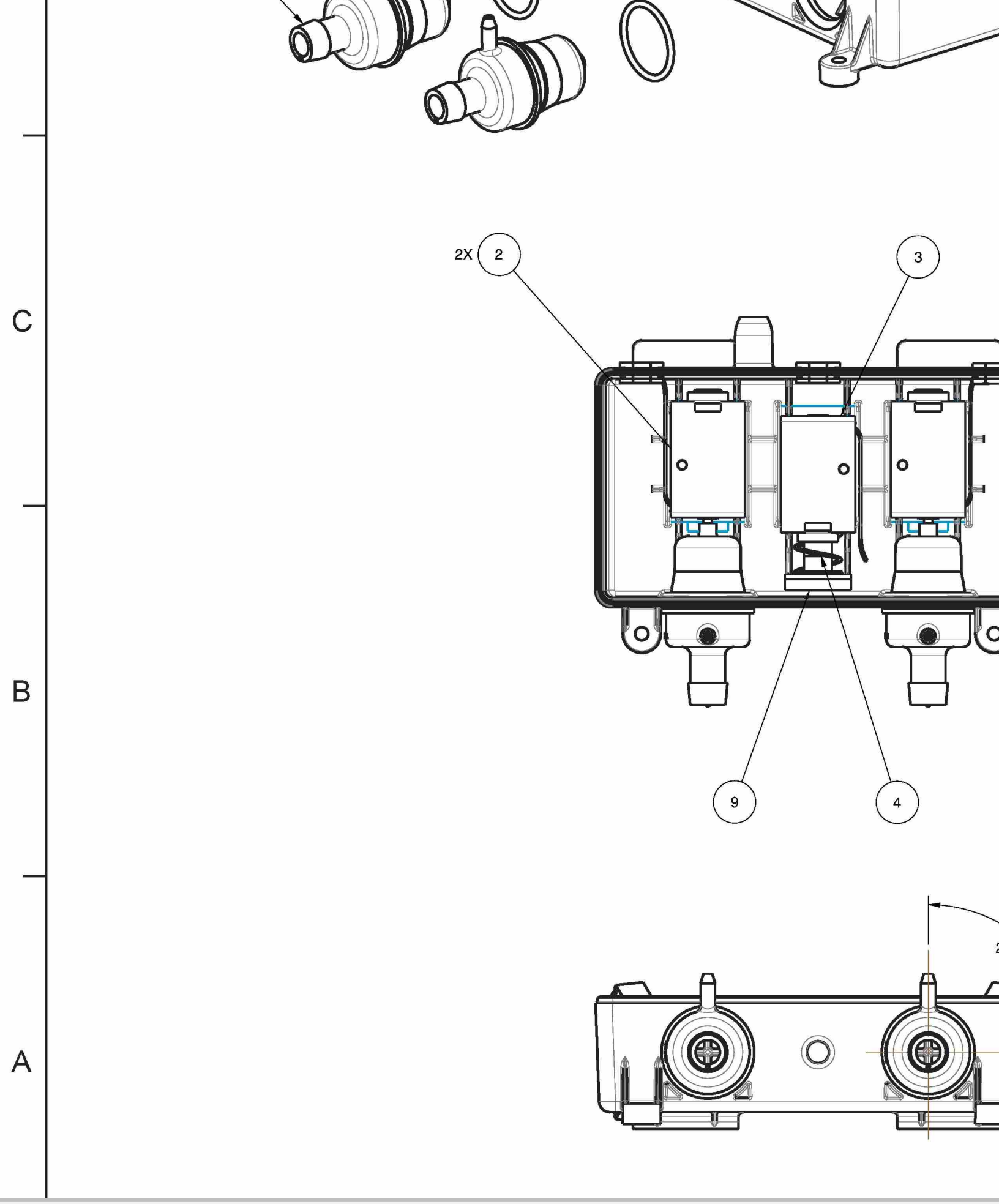

DOCKET ALARM
Find authenticated court documents without watermarks at docketalarm.com.