UNITED STATES PATENT AND TRADEMARK OFFICE

UNITED STATES DEPARTMENT OF COMMERCE
United States Patent and Trademark Office
Address: COMMISSIONER FOR PATENTS
P.O. Box 1450
Alexandria, Virginia 22313-1450
www.uspto.gov

APPLICATION NUMBER	FILING OR 371(C) DATE	FIRST NAMED APPLICANT	ATTY. DOCKET NO./TITLE
13/018,321	01/31/2011	Philippe Kahn	

CONFIRMATION NO. 8340

POA ACCEPTANCE LETTER

119523
HIPLegal LLP/DPT
20195 Stevens Creek Boulevard
Suite 250
Cupertino, CA 95014

OC000000069467717

Date Mailed: 07/09/2014

NOTICE OF ACCEPTANCE OF POWER OF ATTORNEY

This is in response to the Power of Attorney filed 06/18/2014.

The Power of Attorney in this application is accepted. Correspondence in this application will be mailed to the above address as provided by 37 CFR 1.33.

/rmturner myles/

Office of Data Management, Application Assistance Unit (571) 272-4000, or (571) 272-4200, or 1-888-786-0101

UNITED STATES PATENT AND TRADEMARK OFFICE

UNITED STATES DEPARTMENT OF COMMERCE
United States Patent and Trademark Office
Address: COMMISSIONER FOR PATENTS
P.O. Box 1450
Alexandria, Virginia 22313-1450
www.uspto.gov

APPLICATION NUMBER	FILING OR 371(C) DATE	FIRST NAMED APPLICANT	ATTY. DOCKET NO./TITLE
13/018,321	01/31/2011	Philippe Kahn	8689P027C2

CONFIRMATION NO. 8340

8791
BLAKELY SOKOLOFF TAYLOR & ZAFMAN
1279 Oakmead Parkway
Sunnyvale, CA 94085-4040

POWER OF ATTORNEY NOTICE

OC000000069467683

Date Mailed: 07/09/2014

NOTICE REGARDING CHANGE OF POWER OF ATTORNEY

This is in response to the Power of Attorney filed 06/18/2014.

- The Power of Attorney to you in this application has been revoked by the assignee who has intervened as provided by 37 CFR 3.71. Future correspondence will be mailed to the new address of record(37 CFR 1.33).

/rmturner myles/

Office of Data Management, Application Assistance Unit (571) 272-4000, or (571) 272-4200, or 1-888-786-0101

U.S. Patent and Trademark Office; U.S. DEPARTMENT OF COMMERCE
Under the Paperwork Reduction Act of 1995, no persons are required to respond to a collection of information unless it displays a valid OMB control number.

STATEMENT UNDER 37 CFR 3.73(b)

Applicant/Patent Owner: Philippe Kahn

Application No./Patent No.: 13/018,321 Filed/Issue Date: January 31, 2011

Titled: HUMAN ACTIVITY MONITORING DEVICE

DP TECHNOLOGIES, INC. , a corporation

(Name of Assignee) (Type of Assignee, e.g., corporation, partnership, university, government agency, etc.

states that it is:

1. ☒ the assignee of the entire right, title, and interest in;

2. ☐ an assignee of less than the entire right, title, and interest in (The extent (by percentage) of its ownership interest is _____ %); or

3. ☐ the assignee of an undivided interest in the entirety of (a complete assignment from one of the joint inventors was made)

the patent application/patent identified above, by virtue of either:

A. ☐ An assignment from the inventor(s) of the patent application/patent identified above. The assignment was recorded in the United States Patent and Trademark Office at Reel _____, Frame _____, or for which a copy therefore is attached.

OR

B. ☒ A chain of title from the inventor(s), of the patent application/patent identified above, to the current assignee as follows:

1. From: Inventors To: FULLPOWER, INC.

The document was recorded in the United States Patent and Trademark Office at
Reel 019124 , Frame 0195 , or for which a copy thereof is attached.

2. From: FULLPOWER, INC. To: DP TECHNOLOGIES, INC.

The document was recorded in the United States Patent and Trademark Office at
Reel 021965 , Frame 0710 , or for which a copy thereof is attached.

3. From: _____ To: _____

The document was recorded in the United States Patent and Trademark Office at
Reel _____ , Frame _____ , or for which a copy thereof is attached.

☐ Additional documents in the chain of title are listed on a supplemental sheet(s).

☐ As required by 37 CFR 3.73(b)(1)(i), the documentary evidence of the chain of title from the original owner to the assignee was, or concurrently is being, submitted for recordation pursuant to 37 CFR 3.11.

[NOTE: A separate copy (*i.e.*, a true copy of the original assignment document(s)) must be submitted to Assignment Division in accordance with 37 CFR Part 3, to record the assignment in the records of the USPTO. See MPEP 302.08]

The undersigned (whose title is supplied below) is authorized to act on behalf of the assignee.

/Judith Szepesi/ June 18, 2014

Signature Date

Judith A. Szepesi, Reg. No. 39,393

Printed or Typed Name Title

This collection of information is required by 37 CFR 3.73(b). The information is required to obtain or retain a benefit by the public which is to file (and by the USPTO to process) an application. Confidentiality is governed by 35 U.S.C. 122 and 37 CFR 1.11 and 1.14. This collection is estimated to take 12 minutes to complete, including gathering, preparing, and submitting the completed application form to the USPTO. Time will vary depending upon the individual case. Any comments on the amount of time you require to complete this form and/or suggestions for reducing this burden, should be sent to the Chief Information Officer, U.S. Patent and Trademark Office, U.S. Department of Commerce, P.O. Box 1450, Alexandria, VA 22313-1450. DO NOT SEND FEES OR COMPLETED FORMS TO THIS ADDRESS. **SEND TO: Commissioner**

PTO/SB/80 (11-08)
Approved for use through 11/30/2011. OMB 0651-0035
U.S. Patent and Trademark Office; U.S. DEPARTMENT OF COMMERCE
Under the Paperwork Reduction Act of 1995, no persons are required to respond to a collection of information unless it displays a valid OMB control number.

POWER OF ATTORNEY TO PROSECUTE APPLICATIONS BEFORE THE USPTO

I hereby revoke all previous powers of attorney given in the application identified in the attached statement under 37 CFR 3.73(b).

I hereby appoint:

☑ Practitioners associated with the Customer Number: 119523

OR

☐ Practitioner(s) named below (if more than ten patent practitioners are to be named, then a customer number must be used):

Name	Registration Number	Name	Registration Number

as attorney(s) or agent(s) to represent the undersigned before the United States Patent and Trademark Office (USPTO) in connection with any and all patent applications assigned only to the undersigned according to the USPTO assignment records or assignment documents attached to this form in accordance with 37 CFR 3.73(b).

Please change the correspondence address for the application identified in the attached statement under 37 CFR 3.73(b) to:

☑ The address associated with Customer Number: 119523

OR

☐ Firm or Individual Name			
Address			
City		State	Zip
Country			
Telephone		Email	

Assignee Name and Address:
DPTechnologies, Inc.
245-M Mt. Hermon Road, #363
Scotts Valley, CA 95066

A copy of this form, together with a statement under 37 CFR 3.73(b) (Form PTO/SB/96 or equivalent) is required to be filed in each application in which this form is used. The statement under 37 CFR 3.73(b) may be completed by one of the practitioners appointed in this form if the appointed practitioner is authorized to act on behalf of the assignee, and must identify the application in which this Power of Attorney is to be filed.

SIGNATURE of Assignee of Record
The individual whose signature and title is supplied below is authorized to act on behalf of the assignee

Signature		Date	March 28, 2014
Name	Philippe Kahn	Telephone	
Title	President, CEO, Chairman and Co-founder		

This collection of information is required by 37 CFR 1.31, 1.32 and 1.33. The information is required to obtain or retain a benefit by the public which is to file (and by the USPTO to process) an application. Confidentiality is governed by 35 U.S.C. 122 and 37 CFR 1.11 and 1.14. This collection is estimated to take 3 minutes to complete, including gathering, preparing, and submitting the completed application form to the USPTO. Time will vary depending upon the individual case. Any comments on the amount of time you require to complete this form and/or suggestions for reducing this burden, should be sent to the Chief Information Officer, U.S. Patent and Trademark Office, U.S. Department of Commerce, P.O. Box 1450, Alexandria, VA 22313-1450. DO NOT SEND FEES OR COMPLETED FORMS TO THIS ADDRESS. **SEND TO: Commissioner for Patents, P.O. Box 1450, Alexandria, VA 22313-1450.**

If you need assistance in completing the form, call 1-800-PTO-9199 and select option 2.

Electronic Acknowledgement Receipt	
EFS ID:	19346454
Application Number:	13018321
International Application Number:	
Confirmation Number:	8340
Title of Invention:	HUMAN ACTIVITY MONITORING DEVICE
First Named Inventor/Applicant Name:	Philippe Kahn
Customer Number:	8791
Filer:	Judith A. Szepesi
Filer Authorized By:	
Attorney Docket Number:	8689P027C2
Receipt Date:	18-JUN-2014
Filing Date:	31-JAN-2011
Time Stamp:	19:09:07
Application Type:	Utility under 35 USC 111(a)

Payment information:

Submitted with Payment	no

File Listing:

Document Number	Document Description	File Name	File Size(Bytes)/ Message Digest	Multi Part /.zip	Pages (if appl.)
1	Application Data Sheet	8689P027C2_ADS.pdf	1561458 7399e4ab8a465233d307bbe175a3455c1ca5aaa5	no	8
Warnings:					
Information:					

2	Power of Attorney	8689P027C2_POA.pdf	276104 5726b5a1579ce52b1d18f3bdde1b2d29827584b3	no	2
Warnings:					
Information:					
			Total Files Size (in bytes):	1837562	

This Acknowledgement Receipt evidences receipt on the noted date by the USPTO of the indicated documents, characterized by the applicant, and including page counts, where applicable. It serves as evidence of receipt similar to a Post Card, as described in MPEP 503.

New Applications Under 35 U.S.C. 111
If a new application is being filed and the application includes the necessary components for a filing date (see 37 CFR 1.53(b)-(d) and MPEP 506), a Filing Receipt (37 CFR 1.54) will be issued in due course and the date shown on this Acknowledgement Receipt will establish the filing date of the application.

National Stage of an International Application under 35 U.S.C. 371
If a timely submission to enter the national stage of an international application is compliant with the conditions of 35 U.S.C. 371 and other applicable requirements a Form PCT/DO/EO/903 indicating acceptance of the application as a national stage submission under 35 U.S.C. 371 will be issued in addition to the Filing Receipt, in due course.

New International Application Filed with the USPTO as a Receiving Office
If a new international application is being filed and the international application includes the necessary components for an international filing date (see PCT Article 11 and MPEP 1810), a Notification of the International Application Number and of the International Filing Date (Form PCT/RO/105) will be issued in due course, subject to prescriptions concerning national security, and the date shown on this Acknowledgement Receipt will establish the international filing date of the application.

PTO/AIA/14 (12-13)
Approved for use through 01/31/2014. OMB 0651-0032
U.S. Patent and Trademark Office; U.S. DEPARTMENT OF COMMERCE
Under the Paperwork Reduction Act of 1995, no persons are required to respond to a collection of information unless it contains a valid OMB control number.

Application Data Sheet 37 CFR 1.76	Attorney Docket Number	8689P027C2
	Application Number	13/018,321
Title of Invention	HUMAN ACTIVITY MONITORING DEVICE	

The application data sheet is part of the provisional or nonprovisional application for which it is being submitted. The following form contains the bibliographic data arranged in a format specified by the United States Patent and Trademark Office as outlined in 37 CFR 1.76.
This document may be completed electronically and submitted to the Office in electronic format using the Electronic Filing System (EFS) or the document may be printed and included in a paper filed application.

Secrecy Order 37 CFR 5.2

☐ Portions or all of the application associated with this Application Data Sheet may fall under a Secrecy Order pursuant to 37 CFR 5.2 (Paper filers only. Applications that fall under Secrecy Order may not be filed electronically.)

Inventor Information:

Inventor 1 Remove

Legal Name

Prefix	Given Name	Middle Name	Family Name	Suffix
	Philippe	Richard	Kahn	

Residence Information (Select One) ◉ US Residency ○ Non US Residency ○ Active US Military Service

City	Santa Cruz	State/Province	CA	Country of Residence i	US

Mailing Address of Inventor:

Address 1	122 Fairview Place		
Address 2			
City	Santa Cruz	State/Province	CA
Postal Code	95062	Country i	US

Inventor 2 Remove

Legal Name

Prefix	Given Name	Middle Name	Family Name	Suffix
	Arthur		Kinsolving	

Residence Information (Select One) ◉ US Residency ○ Non US Residency ○ Active US Military Service

City	Santa Cruz	State/Province	CA	Country of Residence i	US

Mailing Address of Inventor:

Address 1	1034 N Branciforte Ave		
Address 2			
City	Santa Cruz	State/Province	CA
Postal Code	95062	Country i	US

Inventor 3 Remove

Legal Name

Prefix	Given Name	Middle Name	Family Name	Suffix
	Mark	Andrew	Christensen	

Residence Information (Select One) ◉ US Residency ○ Non US Residency ○ Active US Military Service

Application Data Sheet 37 CFR 1.76	Attorney Docket Number	8689P027C2
	Application Number	
Title of Invention	HUMAN ACTIVITY MONITORING DEVICE	

City	Santa Cruz	State/Province	CA	Country of Residence i	US

Mailing Address of Inventor:

Address 1	107 Brookwood Drive		
Address 2			
City	Santa Cruz	State/Province	CA
Postal Code	95065	Country i	US

Inventor 4 Remove

Legal Name

Prefix	Given Name	Middle Name	Family Name	Suffix
	Brian	Y	Lee	

Residence Information (Select One) (•) US Residency ( ) Non US Residency ( ) Active US Military Service

City	Aptos	State/Province	CA	Country of Residence i	US

Mailing Address of Inventor:

Address 1	777 Hudson Lane		
Address 2			
City	Aptos	State/Province	CA
Postal Code	95003	Country i	US

Inventor 5 Remove

Legal Name

Prefix	Given Name	Middle Name	Family Name	Suffix
	David		Vogel	

Residence Information (Select One) (•) US Residency ( ) Non US Residency ( ) Active US Military Service

City	Santa Cruz	State/Province	CA	Country of Residence i	US

Mailing Address of Inventor:

Address 1	600 Beel Drive		
Address 2			
City	Santa Cruz	State/Province	CA
Postal Code	95060	Country i	US

All Inventors Must Be Listed - Additional Inventor Information blocks may be generated within this form by selecting the **Add** button. Add

Correspondence Information:

Enter either Customer Number or complete the Correspondence Information section below.
For further information see 37 CFR 1.33(a).

☐ **An Address is being provided for the correspondence Information of this application.**

PTO/AIA/14 (12-13)
Approved for use through 01/31/2014. OMB 0651-0032
U.S. Patent and Trademark Office; U.S. DEPARTMENT OF COMMERCE
Under the Paperwork Reduction Act of 1995, no persons are required to respond to a collection of information unless it contains a valid OMB control number.

Application Data Sheet 37 CFR 1.76	Attorney Docket Number	8689P027C2
	Application Number	
Title of Invention	HUMAN ACTIVITY MONITORING DEVICE	

Customer Number	119523		
Email Address	uspto@hiplegal.com	Add Email	Remove Email

Application Information:

Title of the Invention	HUMAN ACTIVITY MONITORING DEVICE		
Attorney Docket Number	8689P027C2	Small Entity Status Claimed	☐
Application Type	Nonprovisional		
Subject Matter	Utility		
Total Number of Drawing Sheets (if any)	9	Suggested Figure for Publication (if any)	

Filing By Reference :

Only complete this section when filing an application by reference under 35 U.S.C. 111(c) and 37 CFR 1.57(a). Do not complete this section if application papers including a specification and any drawings are being filed. Any domestic benefit or foreign priority information must be provided in the appropriate section(s) below (i.e., "Domestic Benefit/National Stage Information" and "Foreign Priority Information").

For the purposes of a filing date under 37 CFR 1.53(b), the description and any drawings of the present application are replaced by this reference to the previously filed application, subject to conditions and requirements of 37 CFR 1.57(a).

Application number of the previously filed application	Filing date (YYYY-MM-DD)	Intellectual Property Authority or Country i

Publication Information:

☐ Request Early Publication (Fee required at time of Request 37 CFR 1.219)

☒ **Request Not to Publish.** I hereby request that the attached application not be published under 35 U.S.C. 122(b) and certify that the invention disclosed in the attached application **has not and will not** be the subject of an application filed in another country, or under a multilateral international agreement, that requires publication at eighteen months after filing.

Representative Information:

Representative information should be provided for all practitioners having a power of attorney in the application. Providing this information in the Application Data Sheet does not constitute a power of attorney in the application (see 37 CFR 1.32).
Either enter Customer Number or complete the Representative Name section below. If both sections are completed the customer Number will be used for the Representative Information during processing.

Please Select One:	◉ Customer Number	○ US Patent Practitioner	○ Limited Recognition (37 CFR 11.9)
Customer Number	119523		

PTO/AIA/14 (12-13)
Approved for use through 01/31/2014. OMB 0651-0032
U.S. Patent and Trademark Office; U.S. DEPARTMENT OF COMMERCE
Under the Paperwork Reduction Act of 1995, no persons are required to respond to a collection of information unless it contains a valid OMB control number.

Application Data Sheet 37 CFR 1.76	Attorney Docket Number	8689P027C2
	Application Number	
Title of Invention	HUMAN ACTIVITY MONITORING DEVICE	

Domestic Benefit/National Stage Information:

This section allows for the applicant to either claim benefit under 35 U.S.C. 119(e), 120, 121, or 365(c) or indicate National Stage entry from a PCT application. Providing this information in the application data sheet constitutes the specific reference required by 35 U.S.C. 119(e) or 120, and 37 CFR 1.78.
When referring to the current application, please leave the application number blank.

Prior Application Status	Patented			Remove	
Application Number	Continuity Type	Prior Application Number	Filing Date (YYYY-MM-DD)	Patent Number	Issue Date (YYYY-MM-DD)
13018321	Continuation of	12694135	2010-01-26	7881902	2011-02-01
Prior Application Status	Patented			Remove	
Application Number	Continuity Type	Prior Application Number	Filing Date (YYYY-MM-DD)	Patent Number	Issue Date (YYYY-MM-DD)
12694135	Continuation of	11644455	2006-12-22	7653508	2010-01-26

Additional Domestic Benefit/National Stage Data may be generated within this form by selecting the **Add** button. Add

Foreign Priority Information:

This section allows for the applicant to claim priority to a foreign application. Providing this information in the application data sheet constitutes the claim for priority as required by 35 U.S.C. 119(b) and 37 CFR 1.55(d). When priority is claimed to a foreign application that is eligible for retrieval under the priority document exchange program (PDX) [i] the information will be used by the Office to automatically attempt retrieval pursuant to 37 CFR 1.55(h)(1) and (2). Under the PDX program, applicant bears the ultimate responsibility for ensuring that a copy of the foreign application is received by the Office from the participating foreign intellectual property office, or a certified copy of the foreign priority application is filed, within the time period specified in 37 CFR 1.55(g)(1).

Remove

Application Number	Country [i]	Filing Date (YYYY-MM-DD)	Access Code [i] (if applicable)

Additional Foreign Priority Data may be generated within this form by selecting the **Add** button. Add

PTO/AIA/14 (12-13)
Approved for use through 01/31/2014. OMB 0651-0032
U.S. Patent and Trademark Office; U.S. DEPARTMENT OF COMMERCE
Under the Paperwork Reduction Act of 1995, no persons are required to respond to a collection of information unless it contains a valid OMB control number.

Application Data Sheet 37 CFR 1.76	Attorney Docket Number	8689P027C2
	Application Number	
Title of Invention	HUMAN ACTIVITY MONITORING DEVICE	

Statement under 37 CFR 1.55 or 1.78 for AIA (First Inventor to File) Transition Applications

☐ This application (1) claims priority to or the benefit of an application filed before March 16, 2013 and (2) also contains, or contained at any time, a claim to a claimed invention that has an effective filing date on or after March 16, 2013.
NOTE: By providing this statement under 37 CFR 1.55 or 1.78, this application, with a filing date on or after March 16, 2013, will be examined under the first inventor to file provisions of the AIA.

Authorization to Permit Access:

☐ Authorization to Permit Access to the Instant Application by the Participating Offices

If checked, the undersigned hereby grants the USPTO authority to provide the European Patent Office (EPO), the Japan Patent Office (JPO), the Korean Intellectual Property Office (KIPO), the World Intellectual Property Office (WIPO), and any other intellectual property offices in which a foreign application claiming priority to the instant patent application is filed access to the instant patent application. See 37 CFR 1.14(c) and (h). This box should not be checked if the applicant does not wish the EPO, JPO, KIPO, WIPO, or other intellectual property office in which a foreign application claiming priority to the instant patent application is filed to have access to the instant patent application.

In accordance with 37 CFR 1.14(h)(3), access will be provided to a copy of the instant patent application with respect to: 1) the instant patent application-as-filed; 2) any foreign application to which the instant patent application claims priority under 35 U.S.C. 119(a)-(d) if a copy of the foreign application that satisfies the certified copy requirement of 37 CFR 1.55 has been filed in the instant patent application; and 3) any U.S. application-as-filed from which benefit is sought in the instant patent application.

In accordance with 37 CFR 1.14(c), access may be provided to information concerning the date of filing this Authorization.

Applicant Information:

Providing assignment information in this section does not substitute for compliance with any requirement of part 3 of Title 37 of CFR to have an assignment recorded by the Office.

PTO/AIA/14 (12-13)
Approved for use through 01/31/2014. OMB 0651-0032
U.S. Patent and Trademark Office; U.S. DEPARTMENT OF COMMERCE
Under the Paperwork Reduction Act of 1995, no persons are required to respond to a collection of information unless it contains a valid OMB control number.

Application Data Sheet 37 CFR 1.76	Attorney Docket Number	8689P027C2
	Application Number	
Title of Invention	HUMAN ACTIVITY MONITORING DEVICE	

Applicant 1 Remove

If the applicant is the inventor (or the remaining joint inventor or inventors under 37 CFR 1.45), this section should not be completed. The information to be provided in this section is the name and address of the legal representative who is the applicant under 37 CFR 1.43; or the name and address of the assignee, person to whom the inventor is under an obligation to assign the invention, or person who otherwise shows sufficient proprietary interest in the matter who is the applicant under 37 CFR 1.46. If the applicant is an applicant under 37 CFR 1.46 (assignee, person to whom the inventor is obligated to assign, or person who otherwise shows sufficient proprietary interest) together with one or more joint inventors, then the joint inventor or inventors who are also the applicant should be identified in this section.

Clear

◯ Assignee ◯ Legal Representative under 35 U.S.C. 117 ◯ Joint Inventor

◯ Person to whom the inventor is obligated to assign. ◯ Person who shows sufficient proprietary interest

If applicant is the legal representative, indicate the authority to file the patent application, the inventor is:

Name of the Deceased or Legally Incapacitated Inventor :

If the Applicant is an Organization check here. ☐

Prefix	**Given Name**	Middle Name	**Family Name**	Suffix

Mailing Address Information:

Address 1			
Address 2			
City		**State/Province**	
Country [i]		Postal Code	
Phone Number		Fax Number	
Email Address			

Additional Applicant Data may be generated within this form by selecting the Add button. Add

Assignee Information including Non-Applicant Assignee Information:

Providing assignment information in this section does not subsitute for compliance with any requirement of part 3 of Title 37 of CFR to have an assignment recorded by the Office.

Assignee 1

Complete this section if assignee information, including non-applicant assignee information, is desired to be included on the patent application publication . An assignee-applicant identified in the "Applicant Information" section will appear on the patent application publication as an applicant. For an assignee-applicant, complete this section only if identification as an assignee is also desired on the patent application publication.

Remove

PTO/AIA/14 (12-13)
Approved for use through 01/31/2014. OMB 0651-0032
U.S. Patent and Trademark Office; U.S. DEPARTMENT OF COMMERCE
Under the Paperwork Reduction Act of 1995, no persons are required to respond to a collection of information unless it contains a valid OMB control number.

Application Data Sheet 37 CFR 1.76	Attorney Docket Number	8689P027C2
	Application Number	
Title of Invention	HUMAN ACTIVITY MONITORING DEVICE	

If the Assignee or Non-Applicant Assignee is an Organization check here. ☐

Prefix	**Given Name**	Middle Name	**Family Name**	Suffix

Mailing Address Information For Assignee including Non-Applicant Assignee:

Address 1			
Address 2			
City		**State/Province**	
Country i		Postal Code	
Phone Number		Fax Number	
Email Address			

Additional Assignee or Non-Applicant Assignee Data may be generated within this form by selecting the Add button. Add

Signature:

Remove

NOTE: This form must be signed in accordance with 37 CFR 1.33. See 37 CFR 1.4 for signature requirements and certifications

Signature	/Judith Szepesi/			Date (YYYY-MM-DD)	2014-06-18
First Name	Judith A.	Last Name	Szepesi	Registration Number	39393

Additional Signature may be generated within this form by selecting the Add button. Add

This collection of information is required by 37 CFR 1.76. The information is required to obtain or retain a benefit by the public which is to file (and by the USPTO to process) an application. Confidentiality is governed by 35 U.S.C. 122 and 37 CFR 1.14. This collection is estimated to take 23 minutes to complete, including gathering, preparing, and submitting the completed application data sheet form to the USPTO. Time will vary depending upon the individual case. Any comments on the amount of time you require to complete this form and/or suggestions for reducing this burden, should be sent to the Chief Information Officer, U.S. Patent and Trademark Office, U.S. Department of Commerce, P.O. Box 1450, Alexandria, VA 22313-1450. DO NOT SEND FEES OR COMPLETED FORMS TO THIS ADDRESS. **SEND TO: Commissioner for Patents, P.O. Box 1450, Alexandria, VA 22313-1450.**

Privacy Act Statement

The Privacy Act of 1974 (P.L. 93-579) requires that you be given certain information in connection with your submission of the attached form related to a patent application or patent. Accordingly, pursuant to the requirements of the Act, please be advised that: (1) the general authority for the collection of this information is 35 U.S.C. 2(b)(2); (2) furnishing of the information solicited is voluntary; and (3) the principal purpose for which the information is used by the U.S. Patent and Trademark Office is to process and/or examine your submission related to a patent application or patent. If you do not furnish the requested information, the U.S. Patent and Trademark Office may not be able to process and/or examine your submission, which may result in termination of proceedings or abandonment of the application or expiration of the patent.

The information provided by you in this form will be subject to the following routine uses:

1. The information on this form will be treated confidentially to the extent allowed under the Freedom of Information Act (5 U.S.C. 552) and the Privacy Act (5 U.S.C. 552a). Records from this system of records may be disclosed to the Department of Justice to determine whether the Freedom of Information Act requires disclosure of these records.

2. A record from this system of records may be disclosed, as a routine use, in the course of presenting evidence to a court, magistrate, or administrative tribunal, including disclosures to opposing counsel in the course of settlement negotiations.

3. A record in this system of records may be disclosed, as a routine use, to a Member of Congress submitting a request involving an individual, to whom the record pertains, when the individual has requested assistance from the Member with respect to the subject matter of the record.

4. A record in this system of records may be disclosed, as a routine use, to a contractor of the Agency having need for the information in order to perform a contract. Recipients of information shall be required to comply with the requirements of the Privacy Act of 1974, as amended, pursuant to 5 U.S.C. 552a(m).

5. A record related to an International Application filed under the Patent Cooperation Treaty in this system of records may be disclosed, as a routine use, to the International Bureau of the World Intellectual Property Organization, pursuant to the Patent Cooperation Treaty.

6. A record in this system of records may be disclosed, as a routine use, to another federal agency for purposes of National Security review (35 U.S.C. 181) and for review pursuant to the Atomic Energy Act (42 U.S.C. 218(c)).

7. A record from this system of records may be disclosed, as a routine use, to the Administrator, General Services, or his/her designee, during an inspection of records conducted by GSA as part of that agency's responsibility to recommend improvements in records management practices and programs, under authority of 44 U.S.C. 2904 and 2906. Such disclosure shall be made in accordance with the GSA regulations governing inspection of records for this purpose, and any other relevant (i.e., GSA or Commerce) directive. Such disclosure shall not be used to make determinations about individuals.

8. A record from this system of records may be disclosed, as a routine use, to the public after either publication of the application pursuant to 35 U.S.C. 122(b) or issuance of a patent pursuant to 35 U.S.C. 151. Further, a record may be disclosed, subject to the limitations of 37 CFR 1.14, as a routine use, to the public if the record was filed in an application which became abandoned or in which the proceedings were terminated and which application is referenced by either a published application, an application open to public inspections or an issued patent.

9. A record from this system of records may be disclosed, as a routine use, to a Federal, State, or local law enforcement agency, if the USPTO becomes aware of a violation or potential violation of law or regulation.

UNITED STATES PATENT AND TRADEMARK OFFICE

UNITED STATES DEPARTMENT OF COMMERCE
United States Patent and Trademark Office
Address: COMMISSIONER FOR PATENTS
P.O. Box 1450
Alexandria, Virginia 22313-1450
www.uspto.gov

APPLICATION NO.	ISSUE DATE	PATENT NO.	ATTORNEY DOCKET NO.	CONFIRMATION NO.
13/018,321	04/29/2014	8712723	8689P027C2	8340

8791 7590 04/09/2014

BLAKELY SOKOLOFF TAYLOR & ZAFMAN
1279 Oakmead Parkway
Sunnyvale, CA 94085-4040

ISSUE NOTIFICATION

The projected patent number and issue date are specified above.

Determination of Patent Term Adjustment under 35 U.S.C. 154 (b)
(application filed on or after May 29, 2000)

The Patent Term Adjustment is 115 day(s). Any patent to issue from the above-identified application will include an indication of the adjustment on the front page.

If a Continued Prosecution Application (CPA) was filed in the above-identified application, the filing date that determines Patent Term Adjustment is the filing date of the most recent CPA.

Applicant will be able to obtain more detailed information by accessing the Patent Application Information Retrieval (PAIR) WEB site (http://pair.uspto.gov).

Any questions regarding the Patent Term Extension or Adjustment determination should be directed to the Office of Patent Legal Administration at (571)-272-7702. Questions relating to issue and publication fee payments should be directed to the Application Assistance Unit (AAU) of the Office of Data Management (ODM) at (571)-272-4200.

APPLICANT(s) (Please see PAIR WEB site http://pair.uspto.gov for additional applicants):

Philippe Kahn, Aptos, CA;
Arthur Kinsolving, Santa Cruz, CA;
Mark Andrew Christensen, Santa Cruz, CA;
Brian Y. Lee, Aptos, CA;
David Vogel, Santa Cruz, CA;

The United States represents the largest, most dynamic marketplace in the world and is an unparalleled location for business investment, innovation, and commercialization of new technologies. The USA offers tremendous resources and advantages for those who invest and manufacture goods here. Through SelectUSA, our nation works to encourage and facilitate business investment. To learn more about why the USA is the best country in the world to develop technology, manufacture products, and grow your business, visit SelectUSA.gov.

Substitute for Form 1449/PTO				Complete if Known	
INFORMATION DISCLOSURE STATEMENT BY APPLICANT (use as many sheets as necessary)				Application Number	Not yet assigned
				Filing Date	Herewith
				First Named Inventor:	Philippe Kahn
				Art Unit	Not yet assigned
				Examiner Name	Not yet assigned
Sheet	3	**of**	4	Attorney Docket Number	8689P027C2

U.S. PATENT DOCUMENTS

Examiner Initials*	Cite No.[1]	Document Number Number-Kind Code[2] (If known)		Publication Date MM-DD-YYYY	Name of Patentee or Applicant of Cited Document	Pages, Columns, Lines, Where Relevant Passages or Relevant Figures Appear
/E.C./		US-	2003/0139692	7/24/2003	Barrey et al	
		US-	2004/0225467	11/11/2004	Vock, Curtis A.; et al.	
		US-	2004/0236500	11/25/2004	Choi et al	
		US-	2005/0033200	2/10/2005	Soehren, Wayne A.; et al.	
		US-	2005/0222801	10/6/2005	Wulff et al	
		US-	2005/0232388	10/20/2005	Tsuji, Tomoharu	
		US-	2005/0232404	10/20/2005	Gaskill	
		US-	2005/0238132	10/27/2005	Tsuji, Tomoharu	
		US-	2005/0240375	10/27/2005	Sugai, Yoshinori	
		US-	2005/0248718	11/10/2005	Howell, Thomas A., et al.	
		US-	2006/0020177	1/26/2006	Seo et al	
		US-	2006/0100546	5/11/2006	Silk, Jeffrey E	
		US-	2006/0136173	6/22/2006	~~Charles Whipple Jr.; et al.~~	Case, Jr. et al.
Change(s) applied to document, /A.J.P./ 2/14/2012		US-	2006/0223547	10/5/2006	Chin et al	
		US-	2007/0061105	3/15/2007	Darley et al	
		US-	2007/0063850	3/22/2007	Devaul; Richard W.; et al.	
		US-	2007/0067094	3/22/2007	Park et al	
		US-	2007/0082789	4/12/2007	Nissila et al	
		US-	2007/0125852	6/7/2007	Rosenberg	
		US-	2007/0142715	6/21/2007	Banet et al.	
		US-	2007/0208531	9/6/2007	Darley et al	
		US-	2009/0043531	2/12/2009	Kahn et al	
		US-	2009/0234614	9/17/2009	Kahn et al	
		US-	2009/0319221	12/24/2009	Kahn et al	
		US-	2010/0056872	3/4/2010	Kahn et al	
/E.C./		US-	2010/0057398	3/4/2010	Darley et al	
		US-				

Examiner Signature	/Edward Cosimano/	Date Considered	11/03/2011

*EXAMINER: Initial if reference considered, whether or not citation is in conformance with MPEP 609; Draw line through citation if not in conformance and not considered. Include copy of this form with next communication to applicant. [1]Applicant's unique citation designation number (optional). [2]See Kinds Codes of USPTO Patent Documents at www.uspto.gov or MPEP 901.04. [3]Enter Office that issued the document, by the two-letter code (WIPO Standard ST.3). [4]For Japanese patent documents, the indication of the year of reign of the Emperor must precede the serial number of the patent document. [5]Kind of document by the appropriate symbols as indicated on the document under WIPO Standard ST. 16 if possible. [6]Applicant is to place a check mark here if English language translation is attached.

This collection of information is required by 37 CFR 1.97 and 1.98. The information is required to obtain or retain a benefit by the public which is to file (and by the USPTO to process) an application. Confidentiality is governed by 35 U.S.C. 122 and 37 CFR 1.14. This collection is estimated to take 2 hours to complete including gathering, preparing, and submitting the completed application form to the USPTO. Time will vary depending upon the individual case. Any comments on the amount of time you require to complete this form and/or suggestions for reducing this burden, should be sent to the Chief Information Officer, U.S. Patent and Trademark Office, P.O. Box 1450, Alexandria, VA 22313-1450. DO NOT SENT FEES OR COMPLETED FORMS TO THIS ADDRESS. **SEND TO: Commissioner for Patents, P.O. Box 1450, Alexandria, Virginia 22313-1450**.

If you need assistance in completing the form, call 1-800-PTO-9199 (1-800-786-9199) and select option 2.

Substitute for Form 1449/PTO				Complete if Known	
INFORMATION DISCLOSURE STATEMENT BY APPLICANT (use as many sheets as necessary)				Application Number	Not yet assigned
				Filing Date	Herewith
				First Named Inventor:	Philippe Kahn
				Art Unit	Not yet assigned
				Examiner Name	Not yet assigned
Sheet	2	**of**	4	Attorney Docket Number	8689P027C2

U.S. PATENT DOCUMENTS

Examiner Initials*	Cite No.[1]	Document Number Number-Kind Code[2] (If known)		Publication Date MM-DD-YYYY	Name of Patentee or Applicant of Cited Document	Pages, Columns, Lines, Where Relevant Passages or Relevant Figures Appear
/E.C./		US-	6,959,259	10/25/2005	Vock, et al.	
		US-	6,975,959	12/13/2005	Dietrich et al	
		US-	7,010,332	3/7/2006	Irvin et al	
		US-	7,072,789	7/4/2006	Vock, et al.	
		US-	7,092,846	8/15/2006	Vock, et al.	
		US-	7,148,797	12/12/2006	Albert	
		US-	7,158,912	1/20/2007	Vock, et al.	
		US-	7,169,084	1/30/2007	Tsuji, Tomoharu	
		US-	7,171,331	1/30/2007	Vock, et al.	
		US-	7,200,517	4/3/2007	Darley, et al.	
		US-	7,212,943	5/1/2007	Aoshima, et al.	
		US-	7,220,220	5/22/2007	Stubbs, et al.	
		US-	7,297,088	11/20/2007	Tsuji, Tomoharu	
		US-	7,334,472	2/26/2008	Seo et al	
		US-	7,353,112	4/1/2008	Choi et al	
Change(s) applied to document, /AJP/ 2/14/2012		US-	~~7,382,611~~	2/12/2008	Klees, et al. 7,328,611	
		US-	7,387,611	6/17/2008	Inoue et al.	
		US-	7,457,719	11/25/2008	Kahn et al	
		US-	7,526,402	4/28/2009	Tenanhaus et al	
		US-	7,647,196	1/12/2010	Kahn et al	
		US-	7,653,508	1/26/2010	Kahn et al	
		US-	7,753,861	7/13/2010	Kahn et al	
		US-	2002/0089425	7/11/2002	Kubo et al	
		US-	2002/0109600	8/15/2002	Mault, James R.; et al.	
		US-	2002/0151810	10/17/2002	Wong, Philip Lim-Kong; et al.	
		US-	2003/0018430	1/23/2003	Ladetto et al	
		US-	2003/0083596	5/1/2003	Kramer et al	
/E.C./		US-	2003/0109258	6/12/2003	Mantyjarvi et al	

Examiner Signature	/Edward Cosimano/	Date Considered	11/03/2011

*EXAMINER: Initial if reference considered, whether or not citation is in conformance with MPEP 609; Draw line through citation if not in conformance and not considered. Include copy of this form with next communication to applicant. [1]Applicant's unique citation designation number (optional). [2]See Kinds Codes of USPTO Patent Documents at www.uspto.gov or MPEP 901.04. [3]Enter Office that issued the document, by the two-letter code (WIPO Standard ST.3). [4]For Japanese patent documents, the indication of the year of reign of the Emperor must precede the serial number of the patent document. [5]Kind of document by the appropriate symbols as indicated on the document under WIPO Standard ST. 16 if possible. [6]Applicant is to place a check mark here if English language translation is attached.

This collection of information is required by 37 CFR 1.97 and 1.98. The information is required to obtain or retain a benefit by the public which is to file (and by the USPTO to process) an application. Confidentiality is governed by 35 U.S.C. 122 and 37 CFR 1.14. This collection is estimated to take 2 hours to complete including gathering, preparing, and submitting the completed application form to the USPTO. Time will vary depending upon the individual case. Any comments on the amount of time you require to complete this form and/or suggestions for reducing this burden, should be sent to the Chief Information Officer, U.S. Patent and Trademark Office, P.O. Box 1450, Alexandria, VA 22313-1450. DO NOT SENT FEES OR COMPLETED FORMS TO THIS ADDRESS. **SEND TO: Commissioner for Patents, P.O. Box 1450, Alexandria, Virginia 22313-1450**.

If you need assistance in completing the form, call 1-800-PTO-9199 (1-800-786-9199) and select option 2.

PART B - FEE(S) TRANSMITTAL

Complete and send this form, together with applicable fee(s), to: Mail **Mail Stop ISSUE FEE**
Commissioner for Patents
P.O. Box 1450
Alexandria, Virginia 22313-1450
or Fax (571)-273-2885

INSTRUCTIONS: This form should be used for transmitting the ISSUE FEE and PUBLICATION FEE (if required). Blocks 1 through 5 should be completed where appropriate. All further correspondence including the Patent, advance orders and notification of maintenance fees will be mailed to the current correspondence address as indicated unless corrected below or directed otherwise in Block 1, by (a) specifying a new correspondence address; and/or (b) indicating a separate "FEE ADDRESS" for maintenance fee notifications.

CURRENT CORRESPONDENCE ADDRESS (Note: Use Block 1 for any change of address)

8791 7590 05/06/2013
BLAKELY SOKOLOFF TAYLOR & ZAFMAN
1279 Oakmead Parkway
Sunnyvale, CA 94085-4040

Note: A certificate of mailing can only be used for domestic mailings of the Fee(s) Transmittal. This certificate cannot be used for any other accompanying papers. Each additional paper, such as an assignment or formal drawing, must have its own certificate of mailing or transmission.

Certificate of Mailing or Transmission

I hereby certify that this Fee(s) Transmittal is being submitted electronically via EFS Web on the date shown below.

Judith A. Szepesi	(Depositor's name)
/Judith Szepesi/	(Signature)
August 1, 2013	(Date)

APPLICATION NO.	FILING DATE	FIRST NAMED INVENTOR	ATTORNEY DOCKET NO.	CONFIRMATION NO.
13/018,321	01/31/2011	Philippe Kahn	8689P027C2	8340

TITLE OF INVENTION: HUMAN ACTIVITY MONITORING DEVICE

APPLN. TYPE	ENTITY STATUS	ISSUE FEE DUE	PUBLICATION FEE DUE	PREV. PAID ISSUE FEE	TOTAL FEE(S) DUE	DATE DUE
nonprovisional	UNDISCOUNTED	$40	$0	$1740	$40	08/06/2013

EXAMINER	ART UNIT	CLASS-SUBCLASS
COSIMANO, EDWARD R	2857	702-160000

1. Change of correspondence address or indication of "Fee Address" (37 CFR 1.363).

☐ Change of correspondence address (or Change of Correspondence Address form PTO/SB/122) attached.

☐ "Fee Address" indication (or "Fee Address" Indication form PTO/SB/47; Rev 03-02 or more recent) attached. **Use of a Customer Number is required.**

2. For printing on the patent front page, list

(1) the names of up to 3 registered patent attorneys or agents OR, alternatively,

(2) the name of a single firm (having as a member a registered attorney or agent) and the names of up to 2 registered patent attorneys or agents. If no name is listed, no name will be printed.

1 Blakely, Sokoloff,
2 Taylor & Zafman LLP
3 Judith A. Szepesi

3. ASSIGNEE NAME AND RESIDENCE DATA TO BE PRINTED ON THE PATENT (print or type)

PLEASE NOTE: Unless an assignee is identified below, no assignee data will appear on the patent. If an assignee is identified below, the document has been filed for recordation as set forth in 37 CFR 3.11. Completion of this form is NOT a substitute for filing an assignment.

(A) NAME OF ASSIGNEE	(B) RESIDENCE: (CITY and STATE OR COUNTRY)
DP Technologies, Inc.	Scotts Valley, California

Please check the appropriate assignee category or categories (will not be printed on the patent) : ☐ Individual ☒ Corporation or other private group entity ☐ Government

4a. The following fee(s) are submitted:

☒ Issue Fee
☐ Publication Fee (No small entity discount permitted)
☐ Advance Order - # of Copies _____

4b. Payment of Fee(s): **(Please first reapply any previously paid issue fee shown above)**

☐ A check is enclosed.
☐ Payment by credit card. Form PTO-2038 is attached.
☒ The Director is hereby authorized to charge the required fee(s), any deficiency, or credit any overpayment, to Deposit Account Number 02-2666 (enclose an extra copy of this form).

PTOL-85 (Rev. 02/11)

5. **Change in Entity Status** (from status indicated above)

❑ Applicant certifying micro entity status. See 37 CFR 1.29	NOTE: Absent a valid certification of Micro Entity Status (see form PTO/SB/15A and 15B), issue fee payment in the micro entity amount will not be accepted at the risk of application abandonment.
❑ Applicant asserting small entity status. See 37 CFR 1.27	NOTE: If the application was previously under micro entity status, checking this box will be taken to be a notification of loss of entitlement to micro entity status.
❑ Applicant changing to regular undiscounted fee status.	NOTE: Checking this box will be taken to be a notification of loss of entitlement to small or micro entity status, as applicable.

NOTE: The Issue Fee and Publication Fee (if required) will not be accepted from anyone other than the applicant; a registered attorney or agent; or the assignee or other party in interest as shown by the records of the United States Patent and Trademark Office.

Authorized Signature /Judith Szepesi/ Date August 1, 2013

Typed or printed name Judith A. Szepesi Registration No. 39,393

This collection of information is required by 37 CFR 1.311. The information is required to obtain or retain a benefit by the public which is to file (and by the USPTO to process) an application. Confidentiality is governed by 35 U.S.C. 122 and 37 CFR 1.14. This collection is estimated to take 12 minutes to complete, including gathering, preparing, and submitting the completed application form to the USPTO. Time will vary depending upon the individual case. Any comments on the amount of time you require to complete this form and/or suggestions for reducing this burden, should be sent to the Chief Information Officer, U.S. Patent and Trademark Office, U.S. Department of Commerce, P.O. Box 1450, Alexandria, Virginia 22313-1450. DO NOT SEND FEES OR COMPLETED FORMS TO THIS ADDRESS. SEND TO: Commissioner for Patents, P.O. Box 1450, Alexandria, Virginia 22313-1450.

Under the Paperwork Reduction Act of 1995, no persons are required to respond to a collection of information unless it displays a valid OMB control number.

Attorney's Docket No. 8689P027C2 PATENT

IN THE UNITED STATES PATENT AND TRADEMARK OFFICE

Applicant	: Philippe Kahn, et al.	Examiner:	Cosimano, Edward R
Appl. No.	: 13/018,321	Art Unit:	2857
Filed	: January 31, 2011	Conf No:	8340
For	: Human Activity Monitoring Device		
Customer No.	: 08791		

CERTIFICATE OF TRANSMISSION
I hereby certify that this correspondence is being submitted electronically via EFS Web on the date shown below.

/Judith Szepesi/ August 1, 2013
Judith A. Szepesi ***Date***

E-Filed via EFS Web
Commissioner for Patents
P.O. Box 1450
Alexandria, Virginia 22313-1450

COMMENTS ON STATEMENT OF REASONS FOR ALLOWANCE

Dear Sir:

Applicant is assuming that the Examiner's statement of reasons for allowance is to be taken in light of the structure and interaction recited in the claims. Applicant notes that the Examiner's comments have paraphrased the language of the claims and it should be understood that the language of the claims themselves set out the scope of the claims.

Applicants respectfully submit that the IDS filed on January 9, 2012, which was not considered, was resubmitted on January 29, 2013, and was indicated as considered on February 13, 2013. Therefore, Applicants respectfully submit that all submitted references have been considered.

Respectfully submitted,
BLAKELY, SOKOLOFF, TAYLOR & ZAFMAN LLP

Dated: August 1, 2013

/Judith Szepesi/
Judith A. Szepesi
Reg. No. 39,393

Customer No. 08791
1279 Oakmead Parkway
Sunnyvale, CA 94085
(408) 720-8300

Electronic Acknowledgement Receipt	
EFS ID:	16483263
Application Number:	13018321
International Application Number:	
Confirmation Number:	8340
Title of Invention:	HUMAN ACTIVITY MONITORING DEVICE
First Named Inventor/Applicant Name:	Philippe Kahn
Customer Number:	8791
Filer:	Judith A. Szepesi
Filer Authorized By:	
Attorney Docket Number:	8689P027C2
Receipt Date:	01-AUG-2013
Filing Date:	31-JAN-2011
Time Stamp:	22:27:08
Application Type:	Utility under 35 USC 111(a)

Payment information:

Submitted with Payment	no

File Listing:

Document Number	Document Description	File Name	File Size(Bytes)/ Message Digest	Multi Part /.zip	Pages (if appl.)
1	Issue Fee Payment (PTO-85B)	8689P027C2_Issue_Fee_Payment.pdf	224624 957d9f66bf526a088d411c967d913aadaaf9e477	no	2
Warnings:					
Information:					

2	Post Allowance Communication - Incoming	8689P027C2_Comments_for_Allowance.pdf	16972 de2cd6599681ac87fc3cd0f621dfe289ce932653	no	2

Warnings:	
Information:	
Total Files Size (in bytes):	241596

This Acknowledgement Receipt evidences receipt on the noted date by the USPTO of the indicated documents, characterized by the applicant, and including page counts, where applicable. It serves as evidence of receipt similar to a Post Card, as described in MPEP 503.

New Applications Under 35 U.S.C. 111
If a new application is being filed and the application includes the necessary components for a filing date (see 37 CFR 1.53(b)-(d) and MPEP 506), a Filing Receipt (37 CFR 1.54) will be issued in due course and the date shown on this Acknowledgement Receipt will establish the filing date of the application.

National Stage of an International Application under 35 U.S.C. 371
If a timely submission to enter the national stage of an international application is compliant with the conditions of 35 U.S.C. 371 and other applicable requirements a Form PCT/DO/EO/903 indicating acceptance of the application as a national stage submission under 35 U.S.C. 371 will be issued in addition to the Filing Receipt, in due course.

New International Application Filed with the USPTO as a Receiving Office
If a new international application is being filed and the international application includes the necessary components for an international filing date (see PCT Article 11 and MPEP 1810), a Notification of the International Application Number and of the International Filing Date (Form PCT/RO/105) will be issued in due course, subject to prescriptions concerning national security, and the date shown on this Acknowledgement Receipt will establish the international filing date of the application.

1 Fee

PART B - FEE(S) TRANSMITTAL

Complete and send this form, together with applicable fee(s), to: Mail Mail Stop ISSUE FEE
Commissioner for Patents
P.O. Box 1450
Alexandria, Virginia 22313-1450
or Fax (571)-273-2885

INSTRUCTIONS: This form should be used for transmitting the ISSUE FEE and PUBLICATION FEE (if required). Blocks 1 through 5 should be completed where appropriate. All further correspondence including the Patent, advance orders and notification of maintenance fees will be mailed to the current correspondence address as indicated unless corrected below or directed otherwise in Block 1, by (a) specifying a new correspondence address; and/or (b) indicating a separate "FEE ADDRESS" for maintenance fee notifications.

CURRENT CORRESPONDENCE ADDRESS (Note: Use Block 1 for any change of address)

8791 7590 05/06/2013
BLAKELY SOKOLOFF TAYLOR & ZAFMAN
1279 Oakmead Parkway
Sunnyvale, CA 94085-4040

Note: A certificate of mailing can only be used for domestic mailings of the Fee(s) Transmittal. This certificate cannot be used for any other accompanying papers. Each additional paper, such as an assignment or formal drawing, must have its own certificate of mailing or transmission.

Certificate of Mailing or Transmission

I hereby certify that this Fee(s) Transmittal is being submitted electronically via EFS Web on the date shown below.

Judith A. Szepesi	(Depositor's name)
/Judith Szepesi/	(Signature)
August 1, 2013	(Date)

APPLICATION NO.	FILING DATE	FIRST NAMED INVENTOR	ATTORNEY DOCKET NO.	CONFIRMATION NO.
13/018,321	01/31/2011	Philippe Kahn	8689P027C2	8340

TITLE OF INVENTION: HUMAN ACTIVITY MONITORING DEVICE

APPLN. TYPE	ENTITY STATUS	ISSUE FEE DUE	PUBLICATION FEE DUE	PREV. PAID ISSUE FEE	TOTAL FEE(S) DUE	DATE DUE
nonprovisional	UNDISCOUNTED	$40	$0	$1740	$40	08/06/2013

EXAMINER	ART UNIT	CLASS-SUBCLASS
COSIMANO, EDWARD R	2857	702-160000

1. Change of correspondence address or indication of "Fee Address" (37 CFR 1.363).
- ☐ Change of correspondence address (or Change of Correspondence Address form PTO/SB/122) attached.
- ☐ "Fee Address" indication (or "Fee Address" Indication form PTO/SB/47; Rev 03-02 or more recent) attached. **Use of a Customer Number is required.**

2. For printing on the patent front page, list
(1) the names of up to 3 registered patent attorneys or agents OR, alternatively,
(2) the name of a single firm (having as a member a registered attorney or agent) and the names of up to 2 registered patent attorneys or agents. If no name is listed, no name will be printed.

1 Blakely, Sokoloff,
2 Taylor & Zafman LLP
3 Judith A. Szepesi

3. ASSIGNEE NAME AND RESIDENCE DATA TO BE PRINTED ON THE PATENT (print or type)

PLEASE NOTE: Unless an assignee is identified below, no assignee data will appear on the patent. If an assignee is identified below, the document has been filed for recordation as set forth in 37 CFR 3.11. Completion of this form is NOT a substitute for filing an assignment.

(A) NAME OF ASSIGNEE	(B) RESIDENCE: (CITY and STATE OR COUNTRY)
DP Technologies, Inc.	Scotts Valley, California

Please check the appropriate assignee category or categories (will not be printed on the patent): ☐ Individual ☒ Corporation or other private group entity ☐ Government

4a. The following fee(s) are submitted:
- ☒ Issue Fee
- ☐ Publication Fee (No small entity discount permitted)
- ☐ Advance Order - # of Copies _____

4b. Payment of Fee(s): **(Please first reapply any previously paid issue fee shown above)**
- ☐ A check is enclosed.
- ☐ Payment by credit card. Form PTO-2038 is attached.
- ☒ The Director is hereby authorized to charge the required fee(s), any deficiency, or credit any overpayment, to Deposit Account Number 02-2666 (enclose an extra copy of this form).

08/02/2013 EEKUBAY2 00000018 022666 13018321
01 FC:1501 1780.00 DA

Adjustment date: 08/02/2013 EEKUBAY2 13018321
04/26/2012 INTEFSW 00011320 022666
01 FC:1501 1740.00 CR

PTOL-85 (Rev. 02/11)

5. Change in Entity Status (from status indicated above)

☐ Applicant certifying micro entity status. See 37 CFR 1.29	NOTE: Absent a valid certification of Micro Entity Status (see form PTO/SB/15A and 15B), issue fee payment in the micro entity amount will not be accepted at the risk of application abandonment.
☐ Applicant asserting small entity status. See 37 CFR 1.27	NOTE: If the application was previously under micro entity status, checking this box will be taken to be a notification of loss of entitlement to micro entity status.
☐ Applicant changing to regular undiscounted fee status.	NOTE: Checking this box will be taken to be a notification of loss of entitlement to small or micro entity status, as applicable.

NOTE: The Issue Fee and Publication Fee (if required) will not be accepted from anyone other than the applicant; a registered attorney or agent; or the assignee or other party in interest as shown by the records of the United States Patent and Trademark Office.

Authorized Signature /Judith Szepesi/ Date August 1, 2013

Typed or printed name Judith A. Szepesi Registration No. 39,393

This collection of information is required by 37 CFR 1.311. The information is required to obtain or retain a benefit by the public which is to file (and by the USPTO to process) an application. Confidentiality is governed by 35 U.S.C. 122 and 37 CFR 1.14. This collection is estimated to take 12 minutes to complete, including gathering, preparing, and submitting the completed application form to the USPTO. Time will vary depending upon the individual case. Any comments on the amount of time you require to complete this form and/or suggestions for reducing this burden, should be sent to the Chief Information Officer, U.S. Patent and Trademark Office, U.S. Department of Commerce, P.O. Box 1450, Alexandria, Virginia 22313-1450. DO NOT SEND FEES OR COMPLETED FORMS TO THIS ADDRESS. SEND TO: Commissioner for Patents, P.O. Box 1450, Alexandria, Virginia 22313-1450.

Under the Paperwork Reduction Act of 1995, no persons are required to respond to a collection of information unless it displays a valid OMB control number.

UNITED STATES PATENT AND TRADEMARK OFFICE

UNITED STATES DEPARTMENT OF COMMERCE
United States Patent and Trademark Office
Address: COMMISSIONER FOR PATENTS
P.O. Box 1450
Alexandria, Virginia 22313-1450
www.uspto.gov

NOTICE OF ALLOWANCE AND FEE(S) DUE

8791 7590 05/06/2013

BLAKELY SOKOLOFF TAYLOR & ZAFMAN
1279 Oakmead Parkway
Sunnyvale, CA 94085-4040

EXAMINER	
COSIMANO, EDWARD R	
ART UNIT	PAPER NUMBER
2857	

DATE MAILED: 05/06/2013

APPLICATION NO.	FILING DATE	FIRST NAMED INVENTOR	ATTORNEY DOCKET NO.	CONFIRMATION NO.
13/018,321	01/31/2011	Philippe Kahn	8689P027C2	8340

TITLE OF INVENTION: HUMAN ACTIVITY MONITORING DEVICE

APPLN. TYPE	ENTITY STATUS	ISSUE FEE DUE	PUBLICATION FEE DUE	PREV. PAID ISSUE FEE	TOTAL FEE(S) DUE	DATE DUE
nonprovisional	UNDISCOUNTED	$40	$0	$1740	$40	08/06/2013

THE APPLICATION IDENTIFIED ABOVE HAS BEEN EXAMINED AND IS ALLOWED FOR ISSUANCE AS A PATENT. PROSECUTION ON THE MERITS IS CLOSED. THIS NOTICE OF ALLOWANCE IS NOT A GRANT OF PATENT RIGHTS. THIS APPLICATION IS SUBJECT TO WITHDRAWAL FROM ISSUE AT THE INITIATIVE OF THE OFFICE OR UPON PETITION BY THE APPLICANT. SEE 37 CFR 1.313 AND MPEP 1308.

THE ISSUE FEE AND PUBLICATION FEE (IF REQUIRED) MUST BE PAID WITHIN THREE MONTHS FROM THE MAILING DATE OF THIS NOTICE OR THIS APPLICATION SHALL BE REGARDED AS ABANDONED. THIS STATUTORY PERIOD CANNOT BE EXTENDED. SEE 35 U.S.C. 151. THE ISSUE FEE DUE INDICATED ABOVE DOES NOT REFLECT A CREDIT FOR ANY PREVIOUSLY PAID ISSUE FEE IN THIS APPLICATION. IF AN ISSUE FEE HAS PREVIOUSLY BEEN PAID IN THIS APPLICATION (AS SHOWN ABOVE), THE RETURN OF PART B OF THIS FORM WILL BE CONSIDERED A REQUEST TO REAPPLY THE PREVIOUSLY PAID ISSUE FEE TOWARD THE ISSUE FEE NOW DUE.

HOW TO REPLY TO THIS NOTICE:

I. Review the ENTITY STATUS shown above. If the ENTITY STATUS is shown as SMALL or MICRO, verify whether entitlement to that entity status still applies.

If the ENTITY STATUS is the same as shown above, pay the TOTAL FEE(S) DUE shown above.

If the ENTITY STATUS is changed from that shown above, on PART B - FEE(S) TRANSMITTAL, complete section number 5 titled "Change in Entity Status (from status indicated above)".

For purposes of this notice, small entity fees are 1/2 the amount of undiscounted fees, and micro entity fees are 1/2 the amount of small entity fees.

II. PART B - FEE(S) TRANSMITTAL, or its equivalent, must be completed and returned to the United States Patent and Trademark Office (USPTO) with your ISSUE FEE and PUBLICATION FEE (if required). If you are charging the fee(s) to your deposit account, section "4b" of Part B - Fee(s) Transmittal should be completed and an extra copy of the form should be submitted. If an equivalent of Part B is filed, a request to reapply a previously paid issue fee must be clearly made, and delays in processing may occur due to the difficulty in recognizing the paper as an equivalent of Part B.

III. All communications regarding this application must give the application number. Please direct all communications prior to issuance to Mail Stop ISSUE FEE unless advised to the contrary.

IMPORTANT REMINDER: Utility patents issuing on applications filed on or after Dec. 12, 1980 may require payment of maintenance fees. It is patentee's responsibility to ensure timely payment of maintenance fees when due.

PART B - FEE(S) TRANSMITTAL

Complete and send this form, together with applicable fee(s), to: Mail **Mail Stop ISSUE FEE**
Commissioner for Patents
P.O. Box 1450
Alexandria, Virginia 22313-1450
or Fax (571)-273-2885

INSTRUCTIONS: This form should be used for transmitting the ISSUE FEE and PUBLICATION FEE (if required). Blocks 1 through 5 should be completed where appropriate. All further correspondence including the Patent, advance orders and notification of maintenance fees will be mailed to the current correspondence address as indicated unless corrected below or directed otherwise in Block 1, by (a) specifying a new correspondence address; and/or (b) indicating a separate "FEE ADDRESS" for maintenance fee notifications.

CURRENT CORRESPONDENCE ADDRESS (Note: Use Block 1 for any change of address)

8791 7590 05/06/2013
BLAKELY SOKOLOFF TAYLOR & ZAFMAN
1279 Oakmead Parkway
Sunnyvale, CA 94085-4040

Note: A certificate of mailing can only be used for domestic mailings of the Fee(s) Transmittal. This certificate cannot be used for any other accompanying papers. Each additional paper, such as an assignment or formal drawing, must have its own certificate of mailing or transmission.

Certificate of Mailing or Transmission

I hereby certify that this Fee(s) Transmittal is being deposited with the United States Postal Service with sufficient postage for first class mail in an envelope addressed to the Mail Stop ISSUE FEE address above, or being facsimile transmitted to the USPTO (571) 273-2885, on the date indicated below.

(Depositor's name)
(Signature)
(Date)

APPLICATION NO.	FILING DATE	FIRST NAMED INVENTOR	ATTORNEY DOCKET NO.	CONFIRMATION NO.
13/018,321	01/31/2011	Philippe Kahn	8689P027C2	8340

TITLE OF INVENTION: HUMAN ACTIVITY MONITORING DEVICE

APPLN. TYPE	ENTITY STATUS	ISSUE FEE DUE	PUBLICATION FEE DUE	PREV. PAID ISSUE FEE	TOTAL FEE(S) DUE	DATE DUE
nonprovisional	UNDISCOUNTED	$40	$0	$1740	$40	08/06/2013

EXAMINER	ART UNIT	CLASS-SUBCLASS
COSIMANO, EDWARD R	2857	702-160000

1. Change of correspondence address or indication of "Fee Address" (37 CFR 1.363).

❑ Change of correspondence address (or Change of Correspondence Address form PTO/SB/122) attached.

❑ "Fee Address" indication (or "Fee Address" Indication form PTO/SB/47; Rev 03-02 or more recent) attached. **Use of a Customer Number is required.**

2. For printing on the patent front page, list

(1) the names of up to 3 registered patent attorneys or agents OR, alternatively,

(2) the name of a single firm (having as a member a registered attorney or agent) and the names of up to 2 registered patent attorneys or agents. If no name is listed, no name will be printed.

1 _____
2 _____
3 _____

3. ASSIGNEE NAME AND RESIDENCE DATA TO BE PRINTED ON THE PATENT (print or type)

PLEASE NOTE: Unless an assignee is identified below, no assignee data will appear on the patent. If an assignee is identified below, the document has been filed for recordation as set forth in 37 CFR 3.11. Completion of this form is NOT a substitute for filing an assignment.

(A) NAME OF ASSIGNEE (B) RESIDENCE: (CITY and STATE OR COUNTRY)

Please check the appropriate assignee category or categories (will not be printed on the patent) : ❑ Individual ❑ Corporation or other private group entity ❑ Government

4a. The following fee(s) are submitted:

❑ Issue Fee

❑ Publication Fee (No small entity discount permitted)

❑ Advance Order - # of Copies _____

4b. Payment of Fee(s): **(Please first reapply any previously paid issue fee shown above)**

❑ A check is enclosed.

❑ Payment by credit card. Form PTO-2038 is attached.

❑ The Director is hereby authorized to charge the required fee(s), any deficiency, or credit any overpayment, to Deposit Account Number _____ (enclose an extra copy of this form).

PTOL-85 (Rev. 02/11)

5. **Change in Entity Status** (from status indicated above)

❑ Applicant certifying micro entity status. See 37 CFR 1.29

NOTE: Absent a valid certification of Micro Entity Status (see form PTO/SB/15A and 15B), issue fee payment in the micro entity amount will not be accepted at the risk of application abandonment.

❑ Applicant asserting small entity status. See 37 CFR 1.27

NOTE: If the application was previously under micro entity status, checking this box will be taken to be a notification of loss of entitlement to micro entity status.

❑ Applicant changing to regular undiscounted fee status.

NOTE: Checking this box will be taken to be a notification of loss of entitlement to small or micro entity status, as applicable.

NOTE: The Issue Fee and Publication Fee (if required) will not be accepted from anyone other than the applicant; a registered attorney or agent; or the assignee or other party in interest as shown by the records of the United States Patent and Trademark Office.

Authorized Signature _____ Date _____

Typed or printed name _____ Registration No. _____

This collection of information is required by 37 CFR 1.311. The information is required to obtain or retain a benefit by the public which is to file (and by the USPTO to process) an application. Confidentiality is governed by 35 U.S.C. 122 and 37 CFR 1.14. This collection is estimated to take 12 minutes to complete, including gathering, preparing, and submitting the completed application form to the USPTO. Time will vary depending upon the individual case. Any comments on the amount of time you require to complete this form and/or suggestions for reducing this burden, should be sent to the Chief Information Officer, U.S. Patent and Trademark Office, U.S. Department of Commerce, P.O. Box 1450, Alexandria, Virginia 22313-1450. DO NOT SEND FEES OR COMPLETED FORMS TO THIS ADDRESS. SEND TO: Commissioner for Patents, P.O. Box 1450, Alexandria, Virginia 22313-1450.

Under the Paperwork Reduction Act of 1995, no persons are required to respond to a collection of information unless it displays a valid OMB control number.

UNITED STATES PATENT AND TRADEMARK OFFICE

UNITED STATES DEPARTMENT OF COMMERCE
United States Patent and Trademark Office
Address: COMMISSIONER FOR PATENTS
P.O. Box 1450
Alexandria, Virginia 22313-1450
www.uspto.gov

APPLICATION NO.	FILING DATE	FIRST NAMED INVENTOR	ATTORNEY DOCKET NO.	CONFIRMATION NO.
13/018,321	01/31/2011	Philippe Kahn	8689P027C2	8340

8791 7590 05/06/2013

BLAKELY SOKOLOFF TAYLOR & ZAFMAN
1279 Oakmead Parkway
Sunnyvale, CA 94085-4040

EXAMINER	
COSIMANO, EDWARD R	

ART UNIT	PAPER NUMBER
2857	

DATE MAILED: 05/06/2013

Determination of Patent Term Adjustment under 35 U.S.C. 154 (b)
(application filed on or after May 29, 2000)

The Patent Term Adjustment to date is 0 day(s). If the issue fee is paid on the date that is three months after the mailing date of this notice and the patent issues on the Tuesday before the date that is 28 weeks (six and a half months) after the mailing date of this notice, the Patent Term Adjustment will be 0 day(s).

If a Continued Prosecution Application (CPA) was filed in the above-identified application, the filing date that determines Patent Term Adjustment is the filing date of the most recent CPA.

Applicant will be able to obtain more detailed information by accessing the Patent Application Information Retrieval (PAIR) WEB site (http://pair.uspto.gov).

Any questions regarding the Patent Term Extension or Adjustment determination should be directed to the Office of Patent Legal Administration at (571)-272-7702. Questions relating to issue and publication fee payments should be directed to the Customer Service Center of the Office of Patent Publication at 1-(888)-786-0101 or (571)-272-4200.

Privacy Act Statement

The Privacy Act of 1974 (P.L. 93-579) requires that you be given certain information in connection with your submission of the attached form related to a patent application or patent. Accordingly, pursuant to the requirements of the Act, please be advised that: (1) the general authority for the collection of this information is 35 U.S.C. 2(b)(2); (2) furnishing of the information solicited is voluntary; and (3) the principal purpose for which the information is used by the U.S. Patent and Trademark Office is to process and/or examine your submission related to a patent application or patent. If you do not furnish the requested information, the U.S. Patent and Trademark Office may not be able to process and/or examine your submission, which may result in termination of proceedings or abandonment of the application or expiration of the patent.

The information provided by you in this form will be subject to the following routine uses:

1. The information on this form will be treated confidentially to the extent allowed under the Freedom of Information Act (5 U.S.C. 552) and the Privacy Act (5 U.S.C 552a). Records from this system of records may be disclosed to the Department of Justice to determine whether disclosure of these records is required by the Freedom of Information Act.
2. A record from this system of records may be disclosed, as a routine use, in the course of presenting evidence to a court, magistrate, or administrative tribunal, including disclosures to opposing counsel in the course of settlement negotiations.
3. A record in this system of records may be disclosed, as a routine use, to a Member of Congress submitting a request involving an individual, to whom the record pertains, when the individual has requested assistance from the Member with respect to the subject matter of the record.
4. A record in this system of records may be disclosed, as a routine use, to a contractor of the Agency having need for the information in order to perform a contract. Recipients of information shall be required to comply with the requirements of the Privacy Act of 1974, as amended, pursuant to 5 U.S.C. 552a(m).
5. A record related to an International Application filed under the Patent Cooperation Treaty in this system of records may be disclosed, as a routine use, to the International Bureau of the World Intellectual Property Organization, pursuant to the Patent Cooperation Treaty.
6. A record in this system of records may be disclosed, as a routine use, to another federal agency for purposes of National Security review (35 U.S.C. 181) and for review pursuant to the Atomic Energy Act (42 U.S.C. 218(c)).
7. A record from this system of records may be disclosed, as a routine use, to the Administrator, General Services, or his/her designee, during an inspection of records conducted by GSA as part of that agency's responsibility to recommend improvements in records management practices and programs, under authority of 44 U.S.C. 2904 and 2906. Such disclosure shall be made in accordance with the GSA regulations governing inspection of records for this purpose, and any other relevant (i.e., GSA or Commerce) directive. Such disclosure shall not be used to make determinations about individuals.
8. A record from this system of records may be disclosed, as a routine use, to the public after either publication of the application pursuant to 35 U.S.C. 122(b) or issuance of a patent pursuant to 35 U.S.C. 151. Further, a record may be disclosed, subject to the limitations of 37 CFR 1.14, as a routine use, to the public if the record was filed in an application which became abandoned or in which the proceedings were terminated and which application is referenced by either a published application, an application open to public inspection or an issued patent.
9. A record from this system of records may be disclosed, as a routine use, to a Federal, State, or local law enforcement agency, if the USPTO becomes aware of a violation or potential violation of law or regulation.

Notice of Allowability	Application No. 13/018,321	Applicant(s) KAHN ET AL.	
	Examiner EDWARD COSIMANO	Art Unit 2857	AIA (First Inventor to File) Status No

-- The MAILING DATE of this communication appears on the cover sheet with the correspondence address--

All claims being allowable, PROSECUTION ON THE MERITS IS (OR REMAINS) CLOSED in this application. If not included herewith (or previously mailed), a Notice of Allowance (PTOL-85) or other appropriate communication will be mailed in due course. **THIS NOTICE OF ALLOWABILITY IS NOT A GRANT OF PATENT RIGHTS.** This application is subject to withdrawal from issue at the initiative of the Office or upon petition by the applicant. See 37 CFR 1.313 and MPEP 1308.

1. ☒ This communication is responsive to *the amendment and Terminal Disclaimer filed on 20 April 2013*.
   ☐ A declaration(s)/affidavit(s) under **37 CFR 1.130(b)** was/were filed on_____.
2. ☐ An election was made by the applicant in response to a restriction requirement set forth during the interview on _____; the restriction requirement and election have been incorporated into this action.
3. ☒ The allowed claim(s) is/are *1,2 and 4-20*. As a result of the allowed claim(s), you may be eligible to benefit from the **Patent Prosecution Highway** program at a participating intellectual property office for the corresponding application. For more information, please see http://www.uspto.gov/patents/init_events/pph/index.jsp or send an inquiry to PPHfeedback@uspto.gov .
4. ☐ Acknowledgment is made of a claim for foreign priority under 35 U.S.C. § 119(a)-(d) or (f).

   Certified copies:

   a) ☐ All b) ☐ Some *c) ☐ None of the:
   1. ☐ Certified copies of the priority documents have been received.
   2. ☐ Certified copies of the priority documents have been received in Application No. _____ .
   3. ☐ Copies of the certified copies of the priority documents have been received in this national stage application from the International Bureau (PCT Rule 17.2(a)).

   * Certified copies not received: _____.

   Interim copies:

   a) ☐ All b) ☐ Some c) ☐ None of the: Interim copies of the priority documents have been received.

Applicant has THREE MONTHS FROM THE "MAILING DATE" of this communication to file a reply complying with the requirements noted below. Failure to timely comply will result in ABANDONMENT of this application.
THIS THREE-MONTH PERIOD IS NOT EXTENDABLE.

5. ☐ CORRECTED DRAWINGS (as "replacement sheets") must be submitted.
   ☐ including changes required by the attached Examiner's Amendment / Comment or in the Office action of Paper No./Mail Date _____.

   Identifying indicia such as the application number (see 37 CFR 1.84(c)) should be written on the drawings in the front (not the back) of each sheet. Replacement sheet(s) should be labeled as such in the header according to 37 CFR 1.121(d).
6. ☐ DEPOSIT OF and/or INFORMATION about the deposit of BIOLOGICAL MATERIAL must be submitted. Note the attached Examiner's comment regarding REQUIREMENT FOR THE DEPOSIT OF BIOLOGICAL MATERIAL.

Attachment(s)

1. ☐ Notice of References Cited (PTO-892)
2. ☐ Information Disclosure Statements (PTO/SB/08), Paper No./Mail Date _____
3. ☐ Examiner's Comment Regarding Requirement for Deposit of Biological Material
4. ☐ Interview Summary (PTO-413), Paper No./Mail Date _____ .
5. ☒ Examiner's Amendment/Comment
6. ☒ Examiner's Statement of Reasons for Allowance
7. ☐ Other _____.

1. EXAMINER'S COMMENT

1.1 APPLICATION PAPERS

1.1.1 When preparing this Office action the Examiner considers the instant application to include:

A) the copy of the Oath/Declaration from parent application serial number 11/644,455 which was filed on 31 January 2011 and that is acceptable to the Examiner;

B) the content of the Abstract which was filed on 31 August 2011 and that is acceptable to the Examiner;

C) figures 1, 2, 3, 4, 5, 6, 7, 8 & 9 of the set of drawings containing 9 sheets of 9 figures comprising figures 1, 2, 3, 4, 5, 6, 7, 8 & 9 as presented in the set of drawings filed on 31 January 2011 where the content of figures 3, 4, 5, 6, 7, 8 & 9 of the above set of drawings is acceptable to the Examiner;

D) the written description as filed on 31 January 2011 and amended on 09 January 2012;

E) the set of 19 claims comprising claims 1, 2 & 4-20 with 4 independent claims as filed on 20 April 2013; and

F) the NON-Publication request filed on 31 January 2011.

1.2 BENEFIT OF AN EARLIER FILING DATE

1.2.1 Applicant's claim for the benefit of an earlier filing date pursuant to 35 U.S.C. 120 is acknowledged.

1.3 PRIOR ART FROM EARLIER APPLICATIONS

1.3.1 The Examiner has considered the prior art cited in the applications for which Applicant has claimed the benefit of an earlier filing date pursuant to 35 U.S.C. 120.

1.3.2 If Applicant wishes any of the prior art that was cited in each of the base applications but that has not been cited during the prosecution of the instant application to appear on any Patent granted on the instant application, then Applicant must provide a properly completed PTO-1449 containing proper citations of the prior art that Applicant wishes to appear on any Patent that may be granted on the instant application.

2. INFORMATION DISCLOSURE STATEMENT (IDS)

2.1 The Examiner notes that each of the Non Patent Literature (NPL) documents that have been crossed off the IDS that was filed on 16 May 2011 because the citation of each of these documents is a duplicate citation of the same document which has been cited on the IDS filed on 31 January 2011 and that has been considered by the Examiner as indicated on the copy of the IDS filed on 31 January 2011 which was attached to the Office action mailed 08 November 2011.

2.2 The IDS filed on 09 January 2012 fails to comply with the provisions of 37 CFR 1.97 and MPEP § 609 because:

A) it fails to comply with 37 CFR 1.97(d) because it lacks a statement as specified in 37 CFR 1.97(e).

It has been placed in the application file, but the information referred to therein has not been considered as to the merits. Applicant is advised that the date of any re-submission of any item of information contained in this information disclosure statement or the submission of any missing element(s) will be the date of submission for purposes of determining compliance with the requirements based on the time of filing the statement, including all certification requirements for statements under 37 CFR 1.97(e). See MPEP § 609.05(a).

2.2.1 In regard to the IDS filed on 09 January 2012, the Examiner notes that in view of the Ex Parte Quayle action mailed on 08 November 2011 that closed prosecution on the merits, the IDS must be submitted pursuant to 37 CFR 1.97(d) and not 37 CFR 1.97(c) as set forth by Applicant in the IDS transmittal letter. Further pursuant to 37 CFR 1.97(d) while the IDS submission lacks the required certification statement, see 37 CFR 1.97(e), the IDS submission does include the required fee.

3. RESPONSE TO APPLICANT'S AMENDMENTS/ARGUMENTS

3.1 The objections and/or rejections that have not been repeated herein have been overcome by Applicant's last response.

4. REASONS FOR ALLOWANCE

4.1 The following is a statement of reasons for the indication of allowable subject matter over the prior art:

A) for example:

(1) either Smith et al (5,485,402) or Richardson et al (5,976,083 or 6,135,951) or Ebeling et al (6,145,389) or Sakuria et al (6,369,794) or Kubo et al (2002/0089425 or 6,700,499) or Ladetto et al (2003/0018430 or 6,826,477) or Darley (6,611,789 or 2007/0061105 or 2007/0208531 or 7,428,471 or 7,617,071 or 2010/0057398 or 7,962,312) or Tsuji (2005/0232388 or 2005/0238132 or JP 2005-309691 A or 7,169,084 or 7,297,088) or Seo et al (2006/0020177 or 7,334,472) or Skvortsov et al (2006/0174685 or 7,305,323) or Park et al (2007/0067094 or 7,640,134) or Pasolini et al (2007/0143068 or 7,463,997) or Kato et al (2008/0243432) disclose a computer implemented machine/process that while under the control of a suitable operating program/system stored within or on a computer readable/accessible media/medium provides the useful and beneficial function of monitoring and counting human activity. To monitor human activity, a suitable sensor is used in order to sense and monitor the one or more accelerations that are produced by the one or more motions of human activity. The acceleration signals that are produced by the sensor are then suitably processed by being analyzed or evaluated in order to detect a suitable variation of the amplitude/magnitude or pattern or signature of the sensor signal from the sensor that represents a human motion such as a step. Once a step has been detected, a step count is incremented in order to count the number of time that a human activity has been detected. Whereas further taught or suggest by at least:

(a) Smith et al (5,485,402) the count represents the number of human actions that have occurred within a measured time interval;

(b) either Richardson et al (5,976,083 or 6,135,951) or Ebeling et al (6,145,389) the count representing the number of human action is used in order to determine a distance that has been traveled by the human;

(c) either Sakuria et al (6,369,794) or Kubo et al (2002/0089425 or 6,700,499) or Ladetto et al (2003/0018430 or 6,826,477) or Park et al (2007/0067094 or 7,640,134) the variations in the sensor signal are variation over a period or interval or duration of time;

(d) either Kubo et al (2002/0089425 or 6,700,499) or Ladetto et al (2003/0018430 or 6,826,477) or Darley (6,611,789 or 2007/0061105 or 2007/0208531 or 7,428,471 or 7,617,071 or 2010/0057398 or 7,962,312) or Park et al (2007/0067094 or 7,640,134) or Pasolini et al (2007/0143068 or 7,463,997) the sensor signal is taken from an axis of the sensor;

(e) either Darley (6,611,789 or 2007/0061105 or 2007/0208531 or 7,428,471 or 7,617,071 or 2010/0057398 or 7,962,312) when a step has not detected within a predetermined period or interval or duration of time then a sleep mode is initialed until a qualifying acceleration has been detected and the monitor wakes up;

(f) either Tsuji (2005/0232388 or 2005/0238132 or JP 2005-309691 A or 7,169,084 or 7,297,088) any variation in the amplitude/magnitude or pattern or signature of the sensor signal from the sensor that is greater than on step cycle is counted as representing one or more human motions such as one or more steps; and

(g) either Seo et al (2006/0020177 or 7,334,472) the sampling frequency of the pedometer is changed when a step has not been detected within a predetermined period or interval or duration of time since the last detected step and then a sleep mode is initialed until a qualifying acceleration is detected and the monitor wakes up.

B) the prior art does not fairly teach or suggest in regard to claims 1, 11 a process in claim 1, a machine in claim 11, and a tangible non-transitory article/manufacture in claim 17 that provides the useful and beneficial function of monitoring the activity of an user by providing actions in claim 1 and structures in claims 11 & 17 that perform at least the functions of:

(1) assigning a dominant axis with respect to gravity for an inertial sensor based upon the orientation of the inertial sensor;

(2) detecting a change in the orientation of the inertial sensor and updating the assigned dominant axis for the inertial sensor based upon the detected change in the orientation of the inertial sensor;

(3) counting period motions by monitoring accelerations relative to the dominant axis of the inertial sensor that occur within the cadence window by counting the periodic human motions when the monitored accelerations indicate a motion cycle that meets motion criteria within a cadence window"; and

(4) updating the cadence window as the actual cadence changes.

Claim 2, which depends from claim 1, claims 12-14, which depend from claim 11, and claims 16-20, which depend from claim 15, are allowable over the prior art for the same reason.

C) the prior art does not fairly teach or suggest in regard to claim 6 a process in claim 6 that provides the useful and beneficial function of monitoring the activity of an user by providing actions in claim 6 that perform at least the functions of:

(1) buffering a plurality of motion cycles representing periodic human motions;

(2) identifying within an appropriate cadence window, a number of periodic human motions;

(3) monitoring a human activity by counting each of the identified periodic human motions; and

(4) updating the cadence window as a cadence of the motion cycle changes.

Claims 7-10, which depend from claim 6, are allowable over the prior art for the same reason.

5. RELEVANT ART OF INTEREST

5.1 The Examiner has cited prior art of interest, for example:

A) either Kahn et al (7,457,719) or Kahn et al (2009/0043531 or 2009/0234614 or 2009/0319221 or 7,647,196 or 7,653,508 or 2010/0056872 or 7,753,861 or 7,788,059 or 7,881,902 or 7,987,070 or 8,187,182: a latter effective date) are publications of related applications with at least one common inventor.

6. CONCLUSION

6.1 Any inquiry concerning this communication or earlier communications from the Examiner should be directed to Edward R. Cosimano whose telephone number is 571-272-0571. The Examiner can normally be reached on 571-272-0571 from 8:30am to 5:00pm.

6.2 If attempts to reach the Examiner by telephone are unsuccessful, the Examiner's supervisor, Andrew Schechter, can be reached on 571-272-2302. The fax phone number for the organization where this application or proceeding is assigned is 571-273-8300.

6.3 Information regarding the status of an application may be obtained from the Patent Application Information Retrieval (PAIR) system. Status information for published applications may be obtained from either Private PAIR or Public PAIR. Status information for unpublished applications is available through Private PAIR only. For more information about the PAIR system, see http://portal.uspto.gov/external/portal. Should you have questions on access to the Private PAIR system, contact the Electronic Business Center (EBC) at 866-217-9197 (toll-free).

ERC
04/29/2013

/Edward Cosimano/
Primary Examiner Unit 2857

Receipt date: 04/20/2013

Attorney's Docket No. 8689P027C2 PATENT

IN THE UNITED STATES PATENT AND TRADEMARK OFFICE

Applicant	:	Philippe Kahn, et al.	Examiner:	Cosimano, Edward R
Appl. No.	:	13/018,321	Art Unit:	2857
Filed	:	January 31, 2011	Conf No:	8340
For	:	Human Activity Monitoring Device		
Customer No.	:	08791		

CERTIFICATE OF TRANSMISSION
I hereby certify that this correspondence is being submitted electronically via EFS Web on the date shown below.

/Judith Szepesi/ April 19, 2013
Judith A. Szepesi ***Date***

Mail Stop AF
Commissioner for Patents
P.O. Box 1450
Alexandria, Virginia 22313-1450

OK TO ENTER RULE 116

/ERC/
26 April 2013

AMENDMENT

Sir:

In response to the Office Action of February 19, 2013, which was made final, applicants respectfully request the Examiner to enter the following amendments and consider the following remarks:

Amendments to the Claims begin on page 2 of this paper.
Remarks/Arguments begin on page 6 of this paper.

Issue Classification	Application/Control No.	Applicant(s)/Patent Under Reexamination
	13018321	KAHN ET AL.
	Examiner	**Art Unit**
	EDWARD COSIMANO	2857

CPC		
Symbol	**Type**	**Version**

CPC Combination Sets				
Symbol	**Type**	**Set**	**Ranking**	**Version**

US ORIGINAL CLASSIFICATION		INTERNATIONAL CLASSIFICATION		
CLASS	**SUBCLASS**	**CLAIMED**		**NON-CLAIMED**
702	160	G 0 1 C 22 / 00 (2006.01.01)		
CROSS REFERENCE(S)		G 0 1 P 13 / 00 (2006.01.01)		
		G 0 6 F 19 / 00 (2011.01.01)		
CLASS	**SUBCLASS (ONE SUBCLASS PER BLOCK)**	G 0 6 F 17 / 40 (2006.01.01)		
73	1.79			
377	24.2			

NONE (Assistant Examiner) (Date)	**Total Claims Allowed:** 19	
/EDWARD COSIMANO/ Primary Examiner.Art Unit 2857 (Primary Examiner) 04/29/2013 (Date)	O.G. Print Claim(s) 2	O.G. Print Figure 8

Issue Classification	Application/Control No.	Applicant(s)/Patent Under Reexamination
	13018321	KAHN ET AL.
	Examiner	**Art Unit**
	EDWARD COSIMANO	2857

702	97	187	189												
708	105	200													

NONE		**Total Claims Allowed:**	
(Assistant Examiner)	(Date)	19	
/EDWARD COSIMANO/ Primary Examiner.Art Unit 2857	04/29/2013	O.G. Print Claim(s)	O.G. Print Figure
(Primary Examiner)	(Date)	2	8

U.S. Patent and Trademark Office

Part of Paper No. 20130429

Issue Classification	Application/Control No.	Applicant(s)/Patent Under Reexamination
	13018321	KAHN ET AL.
	Examiner	**Art Unit**
	EDWARD COSIMANO	2857

☐ Claims renumbered in the same order as presented by applicant ☐ CPA ☒ T.D. ☐ R.1.47

Final	Original	Final	Original	Final	Original	Final	Original	Final	Original	Final	Original	Final	Original	Final	Original
1	1	17	17												
2	2	18	18												
	3	19	19												
3	4	16	20												
4	5														
5	6														
8	7														
9	8														
6	9														
7	10														
10	11														
11	12														
12	13														
13	14														
14	15														
15	16														

NONE (Assistant Examiner)	(Date)	**Total Claims Allowed:** 19	
/EDWARD COSIMANO/ Primary Examiner.Art Unit 2857 (Primary Examiner)	04/29/2013 (Date)	O.G. Print Claim(s) 2	O.G. Print Figure 8

U.S. Patent and Trademark Office Part of Paper No. 20130429

Search Notes	Application/Control No.	Applicant(s)/Patent Under Reexamination
	13018321	KAHN ET AL.
	Examiner	Art Unit
	EDWARD COSIMANO	2857

CPC- SEARCHED		
Symbol	Date	Examiner

CPC COMBINATION SETS - SEARCHED		
Symbol	Date	Examiner

US CLASSIFICATION SEARCHED			
Class	Subclass	Date	Examiner
33	700, 701	11/03/2011	ERC
73	1.01, 1.37, 1.38, 1.75, 1.76, 1.77, 1.78, 1.79, 1.81, 432.1, 865.4, 865.8	11/03/2011	ERC
377	1, 13, 15, 17, 19, 20, 24, 24.1, 24.2	11/03/2011	ERC
702	1, 85, 97, 104, 127, 141, 150, 155, 158, 160, 187, 189	11/03/2011	ERC
708	100, 101, 105, 131, 160, 200, 212	11/03/2011	ERC
Updated	above	01/21/2012	ERC
Updated	above	05/19/2012	ERC
Updated	above	02/13/2013	ERC
G01B	5/00, 5/02	02/13/2013	ERC
G01C	22/00, 25/00	02/13/2013	ERC
G01D	7/00	02/13/2013	ERC
G01P	13/00	02/13/2013	ERC
G06F	11/00, 11/30, 11/32, 17/00, 17/40, 19/00	02/13/2013	ERC
Updated	above	04/29/2013	ERC

SEARCH NOTES		
Search Notes	Date	Examiner
Inventor Name Search; Continuity Check	10/28/2011	ERC
EAST (USOCR, USPAT, US-PGPUB, DERWENT, EPO, FPRS, JPO, IBM-TDB)	11/03/2011	ERC
Updated EAST search of 03 November 2011 with additional terms	01/21/2012	ERC
EAST (USOCR, USPAT, US-PGPUB, DERWENT, EPO, FPRS, JPO, IBM-TDB)	05/19/2012	ERC

SEARCH NOTES		
Search Notes	**Date**	**Examiner**
Inventor Name and Assignee Check	02/12/2013	ERC
Inventor Name and Assignee Search	02/13/2013	ERC
EAST (USOCR, USPAT, US-PGPUB, DERWENT, EPO, FPRS, JPO, IBM-TDB)	02/13/2013	ERC
Updated Inventor Name, Assignee and EAST searches of 13 Feburary 2013	04/29/2013	ERC

INTERFERENCE SEARCH			
US Class/ CPC Symbol	**US Subclass / CPC Group**	**Date**	**Examiner**
73	1.01, 1.79	04/29/2013	ERC
377	1, 19, 24, 24.2	04/29/2013	ERC
702	1, 85, 97, 127, 155, 158, 160, 187, 189	04/29/2013	ERC
708	100, 105, 200	04/29/2013	ERC

Index of Claims	Application/Control No.	Applicant(s)/Patent Under Reexamination
	13018321	KAHN ET AL.
	Examiner	**Art Unit**
	EDWARD COSIMANO	2857

✓	Rejected	-	Cancelled	N	Non-Elected	A	Appeal
=	Allowed	÷	Restricted	I	Interference	O	Objected

☐ Claims renumbered in the same order as presented by applicant ☐ CPA ☒ T.D. ☐ R.1.47

CLAIM		DATE								
Final	Original	11/04/2011	01/21/2012	05/20/2012	02/14/2013	04/29/2013				
1	1	=	=	✓	✓	=				
2	2	=	=	✓	✓	=				
	3	=	=	✓	-	-				
3	4	=	=	✓	✓	=				
4	5	=	=	✓	✓	=				
5	6	=	=	✓	✓	=				
8	7	=	=	✓	✓	=				
9	8	=	=	✓	✓	=				
6	9	=	=	✓	✓	=				
7	10	=	=	✓	✓	=				
10	11	=	=	✓	✓	=				
11	12	=	=	✓	✓	=				
12	13	=	=	✓	✓	=				
13	14	=	=	✓	✓	=				
14	15	=	=	✓	✓	=				
15	16	=	=	✓	✓	=				
17	17	=	=	✓	✓	=				
18	18	=	=	✓	✓	=				
19	19	=	=	✓	✓	=				
16	20	=	=	✓	✓	=				

UNITED STATES DEPARTMENT OF COMMERCE
U.S. Patent and Trademark Office
Address : COMMISSIONER FOR PATENTS
P.O. Box 1450
Alexandria, Virginia 22313-1450

APPLICATION NO./ CONTROL NO.	FILING DATE	FIRST NAMED INVENTOR / PATENT IN REEXAMINATION	ATTORNEY DOCKET NO.
13/018,321	31 January, 2011	KAHN ET AL.	8689P027C2

BLAKELY SOKOLOFF TAYLOR & ZAFMAN
1279 Oakmead Parkway
Sunnyvale, CA 94085-4040

EXAMINER	
EDWARD COSIMANO	
ART UNIT	PAPER
2857	20130429A

DATE MAILED:

Please find below and/or attached an Office communication concerning this application or proceeding.

Commissioner for Patents

PTO-90C (Rev.04-03)

	Type	L #	Hits	Search Text	DBs	Time Stamp
1	BRS	L1	433345	(dominant or principle or principal or major or critical or override or overridden or overriding or ((most or greatest or largest) near2 important) or sense or sensing or detect$1r or detection or gravity or gravitational) near5 (axis or axies or direction or vector or orientate or orientated or orientating or orientation or incline or inclined or inclining or inclination)	US-PGPUB; USPAT; UPAD	2013/04/29 14:00
2	BRS	L2	70451	L1 near10 (inertial or ins or ims or gyro or gyroscope or acc or accel or accelerate or accelerated or accelerating or acceleration or mem or micro$1electr$4mechanical$1machine or micro$1electr$4machine or nem or nano$1electr$4mechanical$1machine or nano$1electr$4machine)	US-PGPUB; USPAT; UPAD	2013/04/29 14:01

	Type	L #	Hits	Search Text	DBs	Time Stamp
3	BRS	L3	1285177	(drift or drifted or drifting or vary or variance or varied or varying or variation or deviate or deviated or deviating or deviation or offset or depart or departed or departing or change or changed or changing or chang$1r or alter or altered or altering or alteration or alter$1r or modify or modified or modifying or modification or modif$2r or delta or adjust or adjusted or adjusting or adjustment or adjust$1r or shift or shifted or shifting or shift$1r) near6 (axis or axies or direction of vector or orientate or orientated or orientating or orientation or incline or inclined or inclining or inclination)	US-PGPUB; USPAT; UPAD	2013/04/29 14:01
4	BRS	L4	119265	L3 near6 (inertial or ins or ims or gyro or gyroscope or acc or accel or accelerate or accelerated or accelerating or acceleration or mem or micro$1electr$4mechanical$1machine or micro$1electr$4machine or nem or nano$1electr$4mechanical$1machine or nano$1electr$4machine)	US-PGPUB; USPAT; UPAD	2013/04/29 14:02
5	BRS	L5	10309	L1 near5 (update or updated or updating or updat$1r or correct or corrected or correcting or correction or correct$1r or compensate or compensated or compensating or compensation or compensat$1r or calibrate or calibrated or calibrating or calibration or calibrat$1r)	US-PGPUB; USPAT; UPAD	2013/04/29 14:03
6	BRS	L6	222	L4 same L5	US-PGPUB; USPAT; UPAD	2013/04/29 14:03

	Type	L #	Hits	Search Text	DBs	Time Stamp
7	BRS	L7	1012569	(count or counted or counting or number or numbered or numbering or increment or incremented or incrementing or accumulate or accumulated or accumulating or accumulation) near5 (motion or move or moved or moving or movements or acc or accel or accelerate or accelerated or accelerating or acceleration or step or stepping or walk or walking or run or running or walk or walking or run or running or jog or jogging or act or acting or action or active or activity or gait or stride)	US-PGPUB; USPAT; UPAD	2013/04/29 14:03
8	BRS	L8	1199	L1 near5 L7	US-PGPUB; USPAT; UPAD	2013/04/29 14:05
9	BRS	L9	8	L2 and L6 and L8	US-PGPUB; USPAT; UPAD	2013/04/29 14:05
10	BRS	L10	1522702	(motion or move or moved or moving or movements or step or stepping or walk or walking or run or running or walk or walking or run or running or jog or jogging or act or acting or action or active or activity or gait or stride) near4 (number or numbered or numbering or count or counted or counting or accumulate or accumulated or accumulating or accumulation or at$1least or ((more or greater or larger or bigger) adj2 than) or plural or plurality or multiple or multi)	US-PGPUB; USPAT; UPAD	2013/04/29 14:05

	Type	L #	Hits	Search Text	DBs	Time Stamp
11	BRS	L11	412022	L10 near6 (measure or measured or measuring or measurement or monitor or monitored or monitoring or capture or captured or capturing or detect or detected or detecting or detection or detect$1r or sense or sensed or sensing or sens$1r or transduce or transduced or transducing or transducer or sample or sampled or sampling or sampl$1r or determine or determined or determining or determination or determin$1r or scan or scanned or scanning or scann$1r or met$1r or metered or metering or gauge or gauged or gauging or gaug$1r or gage or gaged or gaging or gag$1r or acquire or acquired or acquiring or acquisition or acquisitioning or acquir$1r or collect or collected or collecting or collection or collect$1r or log or logged or logging or logg$1r or record or recorded or recording or record$1r or accumulate or accumulated or accumulating or accumulation or accumulat$1r or register or registered or registering or registration or buffer or buffered or buffering or store or stored or storing or storage or memorize or memorized or memorizing or memorization or memory)	US-PGPUB; USPAT; UPAD	2013/04/29 14:06

	Type	L #	Hits	Search Text	DBs	Time Stamp
12	BRS	L12	104161	L10 near5 (judge or judged or judging or judgment or judgement or judg$1r or evaluate or evaluated or evaluating or evaluation or evaluat$1r or analysis or analyze or analyzed or analyzing or analyz$1r or allocate or allocated or allocating or allocation or allocat$1r or assign or assigned or assigning or assignment or assign$1r or id or identify or identifying or identified or identification or recogni$1e or recogni$1ed or recogni$1ing or recognition)	US-PGPUB; USPAT; UPAD	2013/04/29 14:06
13	BRS	L13	1046986	(cadence or repeat or repeated or repeating or repetition or periodic or cycle or cyclic or cyclical or gait or stride) near3 (criteria or criterion or criterium or threshold or limit or require or required or requiring or requirement or tolerance or window or range or band or qualify or qualified or qualifying or qualification or within or with$1in or standard or bench or bench$1mark or bench$1marked or bench$1marking or baseline or base or reference or period or time or timing or interval)	US-PGPUB; USPAT; UPAD	2013/04/29 14:06
14	BRS	L14	563	L12 near15 L13	US-PGPUB; USPAT; UPAD	2013/04/29 14:09

	Type	L #	Hits	Search Text	DBs	Time Stamp
15	BRS	L15	844084	(motion or move or moved or moving or movements or step or stepping or walk or walking or run or running or walk or walking or run or running or jog or jogging or act or acting or action or active or activity or gait or stride) near4 (number or numbered or numbering or count or counted or counting or accumulate or accumulated or accumulating or accumulation)	US-PGPUB; USPAT; UPAD	2013/04/29 14:09
16	BRS	L16	2477049	(motion or move or moved or moving or movements or step or stepping or walk or walking or run or running or walk or walking or run or running or jog or jogging or act or acting or action or active or activity or gait or stride) near4 (measure or measured or measuring or measurement or monitor or monitored or monitoring or capture or captured or capturing or detect or detected or detecting or detection or detect$1r or sense or sensed or sensing or sens$1r or transduce or transduced or transducing or transducer or sample or sampled or sampling or sampl$1r or determine or determined or determining or determination or determin$1r or scan or scanned or scanning or scann$1r or met$1r or metered or metering or gauge or gauged or gauging or gaug$1r or gage or gaged or gaging or gag$1r or acquire or acquired or acquiring or acquisition or acquisitioning or acquir$1r or collect or collected or collecting or collection or collect$1r or log or logged or logging or logg$1r or accumulate or accumulated or accumulating or accumulation or accumulat$1r)	US-PGPUB; USPAT; UPAD	2013/04/29 14:09

	Type	L #	Hits	Search Text	DBs	Time Stamp
17	BRS	L17	123609	L15 near15 L16	US-PGPUB; USPAT; UPAD	2013/04/29 14:11
18	BRS	L18	180	L11 and L14 and L17	US-PGPUB; USPAT; UPAD	2013/04/29 14:11
19	BRS	L19	1265	L1 near15 L15	US-PGPUB; USPAT; UPAD	2013/04/29 14:11
20	BRS	L20	5	L9 and L19	US-PGPUB; USPAT; UPAD	2013/04/29 14:11
21	BRS	L21	2002	(kahn$1 adj2 (p or philippe)).in. or ((kinsolving$1 or kingsolving$1) adj2 (a or arthur)).in. or (christensen$1 adj2 (m or mark)).in. or (lee$1 adj2 (b or brian or brain)).in. or (vogel$1 adj2 (d or david)).in.	US-PGPUB; USPAT; UPAD	2013/04/29 14:11
22	BRS	L22	38	(fullpower or full$1power or (dp adj2 (technology or technologies))).as.	US-PGPUB; USPAT; UPAD	2013/04/29 14:11
23	BRS	L23	35	"13"$1"018"$1"321" or "12"$1"694"$1"135" or "7"$1"881"$1"902" or "11"$1"644"$1"455" or "7"$1"653"$1"508" or "60"$1"900"$1"412" or "60"$1"926"$1"027" or "11"$1"891"$1"112" or "2009"$1"0"$1"043"$1"531" or "7"$1"647"$1"196" or "12"$1"069"$1"267" or "12"$1"108"$1"486" or "2009"$1"0"$1"234"$1"614" or "7"$1"987"$1"070" or "12"$1"834"$1"845" or ("20090043531" or "20090234614" or "7647196" or "7653508" or "7881902" or "7987070").pn.	US-PGPUB; USPAT; UPAD	2013/04/29 14:11

	Type	L #	Hits	Search Text	DBs	Time Stamp
24	BRS	L24	18682	(33/700 or 33/701 or 73/1.01 or 73/1.37 or 73/1.38 or 73/1.75 or 73/1.76 or 73/1.77 or 73/1.78 or 73/1.79 or 73/1.81 or 73/432.1 or 73/865.4 or 73/865.8 or 377/1 or 377/13 or 377/15 or 377/17 or 377/19 or 377/20 or 377/24 or 377/24.1 or 377/24.2 or 702/1 or 702/85 or 702/97 or 702/104 or 702/127 or 702/141 or 702/150 or 702/155 or 702/158 or 702/160 or 702/187 or 702/189 or 708/100 or 708/101 or 708/105 or 708/131 or 708/160 or 708/200 or 708/212).ccls.	US-PGPUB; USPAT; UPAD	2013/04/29 14:14
25	BRS	L25	141983	(g01b$1"5"$1"00" or g01b$1"5"$1"02" or g01c$1"22"$1"00" or g01c$1"25"$1"00" or g01p$1"13"$1"00" or g01d$1"7"$1"00" or g06f$1"11"$1"00" or g06f$1"11"$1"30" or g06f$1"11"$1"32" or g06f$1"17"$1"00" or g06f$1"17"$1"40" or g06f$1"19"$1"00")	US-PGPUB; USPAT; UPAD	2013/04/29 14:14

	Type	L #	Hits	Search Text	DBs	Time Stamp
26	BRS	L26	2065	"4285041" or "4578769" or "5446725" or "5446775" or "5583776" or "5485402" or "5593431" or "5654619" or "5778882" or "5955667" or "5976083" or "6013007" or "6122595" or "6135951" or "6145389" or "6282496" or "20020023654" or "6353449" or "6369794" or "20020040601" or "20020089425" or "6428490" or "20020109600" or "20020116147" or "20020118121" or "20020151810" or "6493652" or "6496695" or "20030018430" or "20030023192" or "6513381" or "6522266" or "6532419" or "20030048218" or "6539336" or "20030083596" or "20030093248" or "20030109258" or "20030139692" or "6611789" or "20030208335" or "20030191582" or "6644322" or "6700499" or "20040064286" or "20040077954" or "6744403" or "20040107072" or "6771250"	US-PGPUB; USPAT; UPAD	2013/04/29 14:14

	Type	L #	Hits	Search Text	DBs	Time Stamp
27	BRS	L27	807	"6786877" or "6790178" or "20040186695" or "6813582" or "20040225467" or "20040230138" or "6820002" or "6823036" or "20040236500" or "6826477" or "20040260191" or "6836744" or "20050021270" or "20050021292" or "20050033200" or "20050038626" or "6881191" or "6885971" or "6895341" or "6898550" or "20050132797" or "6928382" or "6941239" or "20050202934" or "20050210300" or "20050222801" or "20050232388" or "20050232404" or "6959259" or "20050238132" or "20050240375" or "20050245988" or "20050248718" or "6975959" or "6983219" or "20060017561" or "20060020177" or "20060020421" or "7010332" or "20060063980" or "20060064276" or "20060100546" or "20060104018" or "7054784" or "7057551"	US-PGPUB; USPAT; UPAD	2013/04/29 14:14

	Type	L #	Hits	Search Text	DBs	Time Stamp
28	BRS	L28	497	"20060136173" or "20060143645" or "7070571" or "7072789" or "20060149516" or "20060161377" or "20060167387" or "20060174685" or "7092846" or "20060206258" or "20060223547" or "20060235642" or "20060259268" or "7145461" or "7148797" or "20060284979" or "20060288781" or "7158912" or "7169084" or "7171331" or "20070032951" or "7177684" or "20070038364" or "20070061105" or "20070063850" or "20070067094" or "20070073482" or "7200517" or "20070082789" or "7212943" or "7216053" or "7220220" or "20070123806" or "20070125852" or "20070130582" or "20070142715" or "20070143068" or "20070145680" or "20070150136" or "7254516" or "7255437" or "7263461" or "20070208530" or "20070208531"	US-PGPUB; USPAT; UPAD	2013/04/29 14:14

	Type	L #	Hits	Search Text	DBs	Time Stamp
29	BRS	L29	262	"20070208544" or "20070213126" or "20070233424" or "20070250261" or "20070259716" or "20070259717" or "20070260418" or "20070260482" or "7297088" or "20070276295" or "7305323" or "7313440" or "7328611" or "7334472" or "7353112" or "7382611" or "7387611" or "20080171918" or "7421369" or "7428471" or "20080243432" or "7451056" or "7457719" or "7463997" or "7467060" or "20090015421" or "20090018773" or "20090047645" or "7512515" or "20090144020" or "7526402" or "20090124348" or "7561960" or "20090213002" or "7586032" or "7596466" or "7608050" or "7617071" or "7627423" or "20090319221" or "7640134" or "7640804" or "7648441" or "7672781" or "20100056872" or "20100057398" or "7679601" or "7684958"	US-PGPUB; USPAT; UPAD	2013/04/29 14:14
30	BRS	L30	60	"20100121605" or "7725139" or "7747409" or "7752011" or "7753861" or "7774156" or "7788059" or "7788071" or "7857772" or "7883445" or "7892080" or "7962312" or "7966148" or "20110184693" or "8152693" or "8179321" or "8187182" or "8229700"	US-PGPUB; USPAT; UPAD	2013/04/29 14:14
31	BRS	L31	2	$2"05"$1"309691"	US-PGPUB; USPAT; UPAD	2013/04/29 14:14

	Type	L #	Hits	Search Text	DBs	Time Stamp
32	BRS	L32	72	L2 and L5 and L7 and L15 and (L6 or L8 or L11 or L14 or L17 or L19) and (L21 or L22 or L23 or L24 or L25 or L26 or L27 or L28 or L29 or L30 or L31)	US-PGPUB; USPAT; UPAD	2013/04/29 14:15
33	BRS	L33	40	(L2 or L5 or L6 or L7 or L8 or L11 or L14 or L15 or L17 or L19) and ("5485402" or "5976083" or "6135951" or "6145389" or "6369794" or "20020089425" or "20030018430" or "6611789" or "6700499" or "6826477" or "20050232388" or "20050238132" or "2005309691" or "20060020177" or "20060174685" or "7169084" or "20070061105" or "20070067094" or "20070143068" or "20070208531" or "7297088" or "7305323" or "7334472" or "7428471" or "20080243432" or "7457719" or "7463997" or "20090043531" or "20090234614" or "7617071" or "20090319221" or "7640134" or "7647196" or "7653508" or "20100057398" or "20100056872" or "7753861" or "7788059" or "7881902" or "7962312" or "7987070").pn.	US-PGPUB; USPAT; UPAD	2013/04/29 14:15
34	BRS	L34	276	L9 or L18 or L20 or L32 or L33	US-PGPUB; USPAT; UPAD	2013/04/29 14:15

Reviewed L34 Ti, Ab, Kwic All (NO NEW HITS)

Interference Search of L34

/ERC/
29 April 2013

UNITED STATES PATENT AND TRADEMARK OFFICE

UNITED STATES DEPARTMENT OF COMMERCE
United States Patent and Trademark Office
Address: COMMISSIONER FOR PATENTS
P.O. Box 1450
Alexandria, Virginia 22313-1450
www.uspto.gov

BIB DATA SHEET

CONFIRMATION NO. 8340

SERIAL NUMBER	FILING or 371(c) DATE RULE	CLASS	GROUP ART UNIT	ATTORNEY DOCKET NO.
13/018,321	01/31/2011	702	2857	8689P027C2

APPLICANTS

Philippe Kahn, Aptos, CA;
Arthur Kinsolving, Santa Cruz, CA;
Mark Andrew Christensen, Santa Cruz, CA;
Brian Y. Lee, Aptos, CA;
David Vogel, Santa Cruz, CA;

**** CONTINUING DATA **************************

This application is a CON of 12/694,135 01/26/2010 PAT 7,881,902
which is a CON of 11/644,455 12/22/2006 PAT 7,653,508 OK /ERC/

**** FOREIGN APPLICATIONS ************************** NONE /ERC/

**** IF REQUIRED, FOREIGN FILING LICENSE GRANTED ****

03/02/2011

Foreign Priority claimed ☐ Yes ☑ No 35 USC 119(a-d) conditions met ☐ Yes ☑ No Verified and Acknowledged /EDWARD R COSIMANO/ Examiner's Signature	☐ Met after Allowance Initials	STATE OR COUNTRY	SHEETS DRAWINGS	TOTAL CLAIMS	INDEPENDENT CLAIMS
		CA	9	19 ~~20~~	4

ADDRESS

BLAKELY SOKOLOFF TAYLOR & ZAFMAN LLP
1279 OAKMEAD PARKWAY
SUNNYVALE, CA 94085-4040
UNITED STATES

TITLE

Human Activity Monitoring Device

FILING FEE RECEIVED		
1310	FEES: Authority has been given in Paper No._____ to charge/credit DEPOSIT ACCOUNT No._____ for following:	☐ All Fees ☐ 1.16 Fees (Filing) ☐ 1.17 Fees (Processing Ext. of time) ☐ 1.18 Fees (Issue) ☐ Other _____ ☐ Credit

BIB (Rev. 05/07).

	Type	L #	Hits	Search Text	DBs	Time Stamp
1	BRS	L1	613081	(dominant or principle or principal or major or critical or override or overridden or overriding or ((most or greatest or largest) near2 important) or sense or sensing or detect$1r or detection or gravity or gravitational) near5 (axis or axies or direction or vector or orientate or orientated or orientating or orientation or incline or inclined or inclining or inclination)	US-PGPUB; USPAT; USOCR; FPRS; EPO; JPO; DERWENT; IBM_TDB	2013/04/29 12:48
2	BRS	L2	77759	L1 near10 (inertial or ins or ims or gyro or gyroscope or acc or accel or accelerate or accelerated or accelerating or acceleration or mem or micro$1electr$4mechanical$1machine or micro$1electr$4machine or nem or nano$1electr$4mechanical$1machine or nano$1electr$4machine)	US-PGPUB; USPAT; USOCR; FPRS; EPO; JPO; DERWENT; IBM_TDB	2013/04/29 12:48

	Type	L #	Hits	Search Text	DBs	Time Stamp
3	BRS	L3	1960476	(drift or drifted or drifting or vary or variance or varied or varying or variation or deviate or deviated or deviating or deviation or offset or depart or departed or departing or change or changed or changing or chang$1r or alter or altered or altering or alteration or alter$1r or modify or modified or modifying or modification or modif$2r or delta or adjust or adjusted or adjusting or adjustment or adjust$1r or shift or shifted or shifting or shift$1r) near6 (axis or axies or direction of vector or orientate or orientated or orientating or orientation or incline or inclined or inclining or inclination)	US-PGPUB; USPAT; USOCR; FPRS; EPO; JPO; DERWENT; IBM_TDB	2013/04/29 12:48
4	BRS	L4	129568	L3 near6 (inertial or ins or ims or gyro or gyroscope or acc or accel or accelerate or accelerated or accelerating or acceleration or mem or micro$1electr$4mechanical$1machine or micro$1electr$4machine or nem or nano$1electr$4mechanical$1machine or nano$1electr$4machine)	US-PGPUB; USPAT; USOCR; FPRS; EPO; JPO; DERWENT; IBM_TDB	2013/04/29 12:48
5	BRS	L5	13844	L1 near5 (update or updated or updating or updat$1r or correct or corrected or correcting or correction or correct$1r or compensate or compensated or compensating or compensation or compensat$1r or calibrate or calibrated or calibrating or calibration or calibrat$1r)	US-PGPUB; USPAT; USOCR; FPRS; EPO; JPO; DERWENT; IBM_TDB	2013/04/29 12:48

	Type	L #	Hits	Search Text	DBs	Time Stamp
6	BRS	L6	274	L4 same L5	US-PGPUB; USPAT; USOCR; FPRS; EPO; JPO; DERWENT; IBM_TDB	2013/04/29 12:48
7	BRS	L7	1202432	(count or counted or counting or number or numbered or numbering or increment or incremented or incrementing or accumulate or accumulated or accumulating or accumulation) near5 (motion or move or moved or moving or movements or acc or accel or accelerate or accelerated or accelerating or acceleration or step or stepping or walk or walking or run or running or walk or walking or run or running or jog or jogging or act or acting or action or active or activity or gait or stride)	US-PGPUB; USPAT; USOCR; FPRS; EPO; JPO; DERWENT; IBM_TDB	2013/04/29 12:48
8	BRS	L8	1490	L1 near5 L7	US-PGPUB; USPAT; USOCR; FPRS; EPO; JPO; DERWENT; IBM_TDB	2013/04/29 12:48
9	BRS	L9	9	L2 and L6 and L8	US-PGPUB; USPAT; USOCR; FPRS; EPO; JPO; DERWENT; IBM_TDB	2013/04/29 12:48

	Type	L #	Hits	Search Text	DBs	Time Stamp
10	BRS	L10	1818310	(motion or move or moved or moving or movements or step or stepping or walk or walking or run or running or walk or walking or run or running or jog or jogging or act or acting or action or active or activity or gait or stride) near4 (number or numbered or numbering or count or counted or counting or accumulate or accumulated or accumulating or accumulation or at$1least or ((more or greater or larger or bigger) adj2 than) or plural or plurality or multiple or multi)	US-PGPUB; USPAT; USOCR; FPRS; EPO; JPO; DERWENT; IBM_TDB	2013/04/29 12:48

	Type	L #	Hits	Search Text	DBs	Time Stamp
11	BRS	L11	465666	L10 near6 (measure or measured or measuring or measurement or monitor or monitored or monitoring or capture or captured or capturing or detect or detected or detecting or detection or detect$1r or sense or sensed or sensing or sens$1r or transduce or transduced or transducing or transducer or sample or sampled or sampling or sampl$1r or determine or determined or determining or determination or determin$1r or scan or scanned or scanning or scann$1r or met$1r or metered or metering or gauge or gauged or gauging or gaug$1r or gage or gaged or gaging or gag$1r or acquire or acquired or acquiring or acquisition or acquisitioning or acquir$1r or collect or collected or collecting or collection or collect$1r or log or logged or logging or logg$1r or record or recorded or recording or record$1r or accumulate or accumulated or accumulating or accumulation or accumulat$1r or register or registered or registering or registration or buffer or buffered or buffering or store or stored or storing or storage or memorize or memorized or memorizing or memorization or memory)	US-PGPUB; USPAT; USOCR; FPRS; EPO; JPO; DERWENT; IBM_TDB	2013/04/29 12:48

	Type	L #	Hits	Search Text	DBs	Time Stamp
12	BRS	L12	110555	L10 near5 (judge or judged or judging or judgment or judgement or judg$1r or evaluate or evaluated or evaluating or evaluation or evaluat$1r or analysis or analyze or analyzed or analyzing or analyz$1r or allocate or allocated or allocating or allocation or allocat$1r or assign or assigned or assigning or assignment or assign$1r or id or identify or identifying or identified or identification or recogni$1e or recogni$1ed or recogni$1ing or recognition)	US-PGPUB; USPAT; USOCR; FPRS; EPO; JPO; DERWENT; IBM_TDB	2013/04/29 12:48
13	BRS	L13	1269511	(cadence or repeat or repeated or repeating or repetition or periodic or cycle or cyclic or cyclical or gait or stride) near3 (criteria or criterion or criterium or threshold or limit or require or required or requiring or requirement or tolerance or window or range or band or qualify or qualified or qualifying or qualification or within or with$1in or standard or bench or bench$1mark or bench$1marked or bench$1marking or baseline or base or reference or period or time or timing or interval)	US-PGPUB; USPAT; USOCR; FPRS; EPO; JPO; DERWENT; IBM_TDB	2013/04/29 12:48
14	BRS	L14	605	L12 near15 L13	US-PGPUB; USPAT; USOCR; FPRS; EPO; JPO; DERWENT; IBM_TDB	2013/04/29 12:48

	Type	L #	Hits	Search Text	DBs	Time Stamp
15	BRS	L15	993420	(motion or move or moved or moving or movements or step or stepping or walk or walking or run or running or walk or walking or run or running or jog or jogging or act or acting or action or active or activity or gait or stride) near4 (number or numbered or numbering or count or counted or counting or accumulate or accumulated or accumulating or accumulation)	US-PGPUB; USPAT; USOCR; FPRS; EPO; JPO; DERWENT; IBM_TDB	2013/04/29 12:48
16	BRS	L16	3308940	(motion or move or moved or moving or movements or step or stepping or walk or walking or run or running or walk or walking or run or running or jog or jogging or act or acting or action or active or activity or gait or stride) near4 (measure or measured or measuring or measurement or monitor or monitored or monitoring or capture or captured or capturing or detect or detected or detecting or detection or detect$1r or sense or sensed or sensing or sens$1r or transduce or transduced or transducing or transducer or sample or sampled or sampling or sampl$1r or determine or determined or determining or determination or determin$1r or scan or scanned or scanning or scann$1r or met$1r or metered or metering or gauge or gauged or gauging or gaug$1r or gage or gaged or gaging or gag$1r or acquire or acquired or acquiring or acquisition or acquisitioning or acquir$1r or collect or collected or collecting or collection or collect$1r or log or logged or logging or logg$1r or accumulate or accumulated or accumulating or accumulation or accumulat$1r)	US-PGPUB; USPAT; USOCR; FPRS; EPO; JPO; DERWENT; IBM_TDB	2013/04/29 12:48

	Type	L #	Hits	Search Text	DBs	Time Stamp
17	BRS	L17	136503	L15 near15 L16	US-PGPUB; USPAT; USOCR; FPRS; EPO; JPO; DERWENT; IBM_TDB	2013/04/29 12:48
18	BRS	L18	185	L11 and L14 and L17	US-PGPUB; USPAT; USOCR; FPRS; EPO; JPO; DERWENT; IBM_TDB	2013/04/29 12:48
19	BRS	L19	1561	L1 near15 L15	US-PGPUB; USPAT; USOCR; FPRS; EPO; JPO; DERWENT; IBM_TDB	2013/04/29 12:48
20	BRS	L20	5	L9 and L19	US-PGPUB; USPAT; USOCR; FPRS; EPO; JPO; DERWENT; IBM_TDB	2013/04/29 12:48
21	BRS	L21	32581	(kahn$1 adj2 (p or philippe)).in. or ((kinsolving$1 or kingsolving$1) adj2 (a or arthur)).in. or (christensen$1 adj2 (m or mark)).in. or (lee$1 adj2 (b or brian or brain)).in. or (vogel$1 adj2 (d or david)).in.	US-PGPUB; USPAT; USOCR; FPRS; EPO; JPO; DERWENT; IBM_TDB	2013/04/29 12:48
22	BRS	L22	87	(fullpower or full$1power or (dp adj2 (technology or technologies))).as.	US-PGPUB; USPAT; USOCR; FPRS; EPO; JPO; DERWENT; IBM_TDB	2013/04/29 12:48

	Type	L #	Hits	Search Text	DBs	Time Stamp
23	BRS	L23	37	"13"$1"018"$1"321" or "12"$1"694"$1"135" or "7"$1"881"$1"902" or "11"$1"644"$1"455" or "7"$1"653"$1"508" or "60"$1"900"$1"412" or "60"$1"926"$1"027" or "11"$1"891"$1"112" or "2009"$1"0"$1"043"$1"531" or "7"$1"647"$1"196" or "12"$1"069"$1"267" or "12"$1"108"$1"486" or "2009"$1"0"$1"234"$1"614" or "7"$1"987"$1"070" or "12"$1"834"$1"845" or ("20090043531" or "20090234614" or "7647196" or "7653508" or "7881902" or "7987070").pn.	US-PGPUB; USPAT; USOCR; FPRS; EPO; JPO; DERWENT; IBM_TDB	2013/04/29 12:48
24	BRS	L24	23259	(33/700 or 33/701 or 73/1.01 or 73/1.37 or 73/1.38 or 73/1.75 or 73/1.76 or 73/1.77 or 73/1.78 or 73/1.79 or 73/1.81 or 73/432.1 or 73/865.4 or 73/865.8 or 377/1 or 377/13 or 377/15 or 377/17 or 377/19 or 377/20 or 377/24 or 377/24.1 or 377/24.2 or 702/1 or 702/85 or 702/97 or 702/104 or 702/127 or 702/141 or 702/150 or 702/155 or 702/158 or 702/160 or 702/187 or 702/189 or 708/100 or 708/101 or 708/105 or 708/131 or 708/160 or 708/200 or 708/212).ccls.	US-PGPUB; USPAT; USOCR; FPRS; EPO; JPO; DERWENT; IBM_TDB	2013/04/29 12:48

	Type	L #	Hits	Search Text	DBs	Time Stamp
25	BRS	L25	405866	(g01b$1"5"$1"00" or g01b$1"5"$1"02" or g01c$1"22"$1"00" or g01c$1"25"$1"00" or g01p$1"13"$1"00" or g01d$1"7"$1"00" or g06f$1"11"$1"00" or g06f$1"11"$1"30" or g06f$1"11"$1"32" or g06f$1"17"$1"00" or g06f$1"17"$1"40" or g06f$1"19"$1"00")	US-PGPUB; USPAT; USOCR; FPRS; EPO; JPO; DERWENT; IBM_TDB	2013/04/29 12:48
26	BRS	L26	2095	"4285041" or "4578769" or "5446725" or "5446775" or "5583776" or "5485402" or "5593431" or "5654619" or "5778882" or "5955667" or "5976083" or "6013007" or "6122595" or "6135951" or "6145389" or "6282496" or "20020023654" or "6353449" or "6369794" or "20020040601" or "20020089425" or "6428490" or "20020109600" or "20020116147" or "20020118121" or "20020151810" or "6493652" or "6496695" or "20030018430" or "20030023192" or "6513381" or "6522266" or "6532419" or "20030048218" or "6539336" or "20030083596" or "20030093248" or "20030109258" or "20030139692" or "6611789" or "20030208335" or "20030191582" or "6644322" or "6700499" or "20040064286" or "20040077954" or "6744403" or "20040107072" or "6771250"	US-PGPUB; USPAT; USOCR; FPRS; EPO; JPO; DERWENT; IBM_TDB	2013/04/29 12:48

	Type	L #	Hits	Search Text	DBs	Time Stamp
27	BRS	L27	848	"6786877" or "6790178" or "20040186695" or "6813582" or "20040225467" or "20040230138" or "6820002" or "6823036" or "20040236500" or "6826477" or "20040260191" or "6836744" or "20050021270" or "20050021292" or "20050033200" or "20050038626" or "6881191" or "6885971" or "6895341" or "6898550" or "20050132797" or "6928382" or "6941239" or "20050202934" or "20050210300" or "20050222801" or "20050232388" or "20050232404" or "6959259" or "20050238132" or "20050240375" or "20050245988" or "20050248718" or "6975959" or "6983219" or "20060017561" or "20060020177" or "20060020421" or "7010332" or "20060063980" or "20060064276" or "20060100546" or "20060104018" or "7054784" or "7057551"	US-PGPUB; USPAT; USOCR; FPRS; EPO; JPO; DERWENT; IBM_TDB	2013/04/29 12:48

	Type	L #	Hits	Search Text	DBs	Time Stamp
28	BRS	L28	534	"20060136173" or "20060143645" or "7070571" or "7072789" or "20060149516" or "20060161377" or "20060167387" or "20060174685" or "7092846" or "20060206258" or "20060223547" or "20060235642" or "20060259268" or "7145461" or "7148797" or "20060284979" or "20060288781" or "7158912" or "7169084" or "7171331" or "20070032951" or "7177684" or "20070038364" or "20070061105" or "20070063850" or "20070067094" or "20070073482" or "7200517" or "20070082789" or "7212943" or "7216053" or "7220220" or "20070123806" or "20070125852" or "20070130582" or "20070142715" or "20070143068" or "20070145680" or "20070150136" or "7254516" or "7255437" or "7263461" or "20070208530" or "20070208531"	US-PGPUB; USPAT; USOCR; FPRS; EPO; JPO; DERWENT; IBM_TDB	2013/04/29 12:48

	Type	L #	Hits	Search Text	DBs	Time Stamp
29	BRS	L29	308	"20070208544" or "20070213126" or "20070233424" or "20070250261" or "20070259716" or "20070259717" or "20070260418" or "20070260482" or "7297088" or "20070276295" or "7305323" or "7313440" or "7328611" or "7334472" or "7353112" or "7382611" or "7387611" or "20080171918" or "7421369" or "7428471" or "20080243432" or "7451056" or "7457719" or "7463997" or "7467060" or "20090015421" or "20090018773" or "20090047645" or "7512515" or "20090144020" or "7526402" or "20090124348" or "7561960" or "20090213002" or "7586032" or "7596466" or "7608050" or "7617071" or "7627423" or "20090319221" or "7640134" or "7640804" or "7648441" or "7672781" or "20100056872" or "20100057398" or "7679601" or "7684958"	US-PGPUB; USPAT; USOCR; FPRS; EPO; JPO; DERWENT; IBM_TDB	2013/04/29 12:48
30	BRS	L30	76	"20100121605" or "7725139" or "7747409" or "7752011" or "7753861" or "7774156" or "7788059" or "7788071" or "7857772" or "7883445" or "7892080" or "7962312" or "7966148" or "20110184693" or "8152693" or "8179321" or "8187182" or "8229700"	US-PGPUB; USPAT; USOCR; FPRS; EPO; JPO; DERWENT; IBM_TDB	2013/04/29 12:48

	Type	L #	Hits	Search Text	DBs	Time Stamp
31	BRS	L31	8	$2"05"$1"309691"	US-PGPUB; USPAT; USOCR; FPRS; EPO; JPO; DERWENT; IBM_TDB	2013/04/29 12:48
32	BRS	L32	72	L2 and L5 and L7 and L15 and (L6 or L8 or L11 or L14 or L17 or L19) and (L21 or L22 or L23 or L24 or L25 or L26 or L27 or L28 or L29 or L30 or L31)	US-PGPUB; USPAT; USOCR; FPRS; EPO; JPO; DERWENT; IBM_TDB	2013/04/29 12:48
33	BRS	L33	54	(L2 or L5 or L6 or L7 or L8 or L11 or L14 or L15 or L17 or L19) and ("5485402" or "5976083" or "6135951" or "6145389" or "6369794" or "20020089425" or "20030018430" or "6611789" or "6700499" or "6826477" or "20050232388" or "20050238132" or "2005309691" or "20060020177" or "20060174685" or "7169084" or "20070061105" or "20070067094" or "20070143068" or "20070208531" or "7297088" or "7305323" or "7334472" or "7428471" or "20080243432" or "7457719" or "7463997" or "20090043531" or "20090234614" or "7617071" or "20090319221" or "7640134" or "7647196" or "7653508" or "20100057398" or "20100056872" or "7753861" or "7788059" or "7881902" or "7962312" or "7987070").pn.	US-PGPUB; USPAT; USOCR; FPRS; EPO; JPO; DERWENT; IBM_TDB	2013/04/29 12:48

	Type	L #	Hits	Search Text	DBs	Time Stamp
34	BRS	L34	295	L9 or L18 or L20 or L32 or L33	US-PGPUB; USPAT; USOCR; FPRS; EPO; JPO; DERWENT; IBM_TDB	2013/04/29 12:48
35	BRS	L35	1956	((L24 or L25) and (@pd>="19470101" and @pd<="19710101")) or ("2005309691").pn.	US-PGPUB; USPAT; USOCR; FPRS; EPO; JPO; DERWENT; IBM_TDB	2013/04/29 13:06

Reviewed L34 Ti, Ab, Kwic All

Reviewed L35 Ti All

Interference Search of L34 & L35

/ERC/
29 April 2013

	+	Document ID	Publication Date	Inventor	Current OR	Current XRef	Pages
1		US 5485402 A	19960116	Smith; Douglas G. et al.	702/160	340/870.01; 340/870.28	10
2		US 5976083 A	19991102	Richardson; J. Jeffrey et al.	600/300	482/8; 482/901; 600/481; 600/587	34
3		US 6135951 A	20001024	Richardson; J. Jeffrey et al.	600/300	482/8; 600/592; 600/595	32
4		US 6145389 A	20001114	Ebeling; W. H. Carl et al.	73/865.4		14
5		US 6369794 B1	20020409	Sakurai; Yasuhiro et al.	345/156	379/433.04	37
6		US 20020089425 A1	20020711	Kubo, Nobuo et al.	340/573.1	340/669	28
7		US 20030018430 A1	20030123	Ladetto, Quentin et al.	701/217	701/200	56
8		US 6611789 B1	20030826	Darley; Jesse	702/160	702/141; 702/142; 702/176	87
9		US 6700499 B2	20040302	Kubo; Nobuo et al.	340/686.1	340/573.1; 340/573.7; 482/3; 482/74; 600/510; 600/552; 600/553; 73/379.01; 73/379.09	27
10		US 6826477 B2	20041130	Ladetto; Quentin et al.	701/217	340/944; 701/200; 701/213; 73/178R	58
11		US 20050232388 A1	20051020	Tsuji, Tomoharu	377/24.2		10
12		US 20050238132 A1	20051027	Tsuji, Tomoharu	377/24.2		10
13		JP 2005309691 A	20051104	TSUJI, TOMOHARU			9

L34 Results

/ERC/ 29 April 2013

	+	Document ID	Publication Date	Inventor	Current OR	Current XRef	Pages
14		US 20060020177 A1	20060126	Seo; Jeong-Wook et al.	600/300	482/8; 600/595	90
15		US 20060174685 A1	20060810	Skvortsov; Vladimir et al.	73/1.37		8
16		US 7169084 B2	20070130	Tsuji; Tomoharu	482/8	482/1; 482/9; 702/160	9
17		US 20070061105 A1	20070315	Darley; Jesse et al.	702/182		86
18		US 20070067094 A1	20070322	Park; Kyong-Ha et al.	701/200	702/141	13
19		US 20070143068 A1	20070621	Pasolini; Fabio et al.	702/160		11
20		US 20070208531 A1	20070906	Darley; Jesse et al.	702/142	702/158; 702/178	86
21		US 7297088 B2	20071120	Tsuji; Tomoharu	482/3	377/24.2; 482/8; 482/900; 702/160	10
22		US 7305323 B2	20071204	Skvortsov; Vladimir et al.	702/160	377/24.2; 702/141	8
23		US 7334472 B2	20080226	Seo; Jeong-Wook et al.	73/379.01		89
24		US 7428471 B2	20080923	Darley; Jesse et al.	702/182	36/132; 36/136; 377/23; 377/24.2; 702/141; 702/142; 702/144; 702/160; 702/176; 73/597	83
25		US 20080243432 A1	20081002	Kato; Kazuo et al.	702/160		7
26		US 7457719 B1	20081125	Kahn; Philippe et al.	702/141		16
27		US 7463997 B2	20081209	Pasolini; Fabio et al.	702/160		12
28		US 20090043531 A1	20090212	Kahn; Philippe et al.	702/149		22

L34 Results

/ERC/ 29 April 2013

	+	Document ID	Publication Date	Inventor	Current OR	Current XRef	Pages
29		US 20090234614 A1	20090917	Kahn; Philippe et al.	702/141	351/158	18
30		US 7617071 B2	20091110	Darley; Jesse et al.	702/165	702/142; 702/158; 702/160; 702/176; 73/597	82
31		US 20090319221 A1	20091224	Kahn; Philippe et al.	702/141		31
32		US 7640134 B2	20091229	Park; Kyong-Ha et al.	702/141	600/587; 600/592; 600/595; 73/491; 73/865.4	13
33		US 7647196 B2	20100112	Kahn; Philippe et al.	702/149	702/142; 702/150; 702/154	22
34		US 7653508 B1	20100126	Kahn; Philippe et al.	702/160	33/700; 377/1; 377/13; 377/24.2; 377/25; 702/1; 702/127; 702/155; 702/158; 702/187; 702/189	19
35		US 20100057398 A1	20100304	Darley; Jesse et al.	702/160	702/142	85
36		US 20100056872 A1	20100304	Kahn; Philippe et al.	600/300		22
37		US 7753861 B1	20100713	Kahn; Philippe et al.	600/595	482/8; 482/9; 600/300; 600/301; 600/587	24

L34 Results

/ERC/ 29 April 2013

	+	Document ID	Publication Date	Inventor	Current OR	Current XRef	Pages
38		US 7788059 B1	20100831	Kahn; Philippe et al.	702/141		17
39		US 7881902 B1	20110201	Kahn; Philippe et al.	702/160	377/24.2; 702/97	19
40		US 7962312 B2	20110614	Darley; Jesse et al.	702/165	702/142; 702/158; 702/160; 702/176; 73/597	84
41		US 7987070 B2	20110726	Kahn; Philippe et al.	702/160	351/41; 73/1.38	19

L34 Results

/ERC/
29 April 2013

	Document ID	Publication Date	Inventor	Current OR	Current XRef	Pages
1	JP 2005309691 A	20051104	TSUJI, TOMOHARU			9

L35 Results

/ERC/
29 April 2013

Application Number	Application/Control No.	Applicant(s)/Patent under Reexamination	
	13/018,321	KAHN ET AL.	

Document Code - DISQ	Internal Document – DO NOT MAIL

TERMINAL DISCLAIMER	☒ APPROVED	☐ DISAPPROVED
Date Filed : 4/20/13	This patent is subject to a Terminal Disclaimer	

Approved/Disapproved by:

jean proctor

U.S. Patent and Trademark Office

PTO/SB/06 (09-11)
Approved for use through 1/31/2014. OMB 0651-0032
U.S. Patent and Trademark Office; U.S. DEPARTMENT OF COMMERCE
Under the Paperwork Reduction Act of 1995, no persons are required to respond to a collection of information unless it displays a valid OMB control number.

PATENT APPLICATION FEE DETERMINATION RECORD Substitute for Form PTO-875	Application or Docket Number 13/018,321	Filing Date 01/31/2011	☐ To be Mailed

ENTITY: ☒ LARGE ☐ SMALL ☐ MICRO

APPLICATION AS FILED – PART I

FOR	(Column 1) NUMBER FILED	(Column 2) NUMBER EXTRA	RATE ($)	FEE ($)
☐ BASIC FEE (37 CFR 1.16(a), (b), or (c))	N/A	N/A	N/A	
☐ SEARCH FEE (37 CFR 1.16(k), (i), or (m))	N/A	N/A	N/A	
☐ EXAMINATION FEE (37 CFR 1.16(o), (p), or (q))	N/A	N/A	N/A	
TOTAL CLAIMS (37 CFR 1.16(i))	minus 20 =	*	X $ =	
INDEPENDENT CLAIMS (37 CFR 1.16(h))	minus 3 =	*	X $ =	
☐ APPLICATION SIZE FEE (37 CFR 1.16(s))	If the specification and drawings exceed 100 sheets of paper, the application size fee due is $310 ($155 for small entity) for each additional 50 sheets or fraction thereof. See 35 U.S.C. 41(a)(1)(G) and 37 CFR 1.16(s).			
☐ MULTIPLE DEPENDENT CLAIM PRESENT (37 CFR 1.16(j))				
* If the difference in column 1 is less than zero, enter "0" in column 2.			TOTAL	

APPLICATION AS AMENDED – PART II

AMENDMENT **04/22/2013**

	(Column 1) CLAIMS REMAINING AFTER AMENDMENT		(Column 2) HIGHEST NUMBER PREVIOUSLY PAID FOR	(Column 3) PRESENT EXTRA	RATE ($)	ADDITIONAL FEE ($)
Total (37 CFR 1.16(i))	* 19	Minus	** 20	= 0	X $80 =	0
Independent (37 CFR 1.16(h))	* 4	Minus	***4	= 0	X $420 =	0
☐ Application Size Fee (37 CFR 1.16(s))						
☐ FIRST PRESENTATION OF MULTIPLE DEPENDENT CLAIM (37 CFR 1.16(j))						
					TOTAL ADD'L FEE	0

AMENDMENT

	(Column 1) CLAIMS REMAINING AFTER AMENDMENT		(Column 2) HIGHEST NUMBER PREVIOUSLY PAID FOR	(Column 3) PRESENT EXTRA	RATE ($)	ADDITIONAL FEE ($)
Total (37 CFR 1.16(i))	*	Minus	**	=	X $ =	
Independent (37 CFR 1.16(h))	*	Minus	***	=	X $ =	
☐ Application Size Fee (37 CFR 1.16(s))						
☐ FIRST PRESENTATION OF MULTIPLE DEPENDENT CLAIM (37 CFR 1.16(j))						
					TOTAL ADD'L FEE	

* If the entry in column 1 is less than the entry in column 2, write "0" in column 3.
** If the "Highest Number Previously Paid For" IN THIS SPACE is less than 20, enter "20".
*** If the "Highest Number Previously Paid For" IN THIS SPACE is less than 3, enter "3".
The "Highest Number Previously Paid For" (Total or Independent) is the highest number found in the appropriate box in column 1.

LIE
/DOROTHY BELL/

This collection of information is required by 37 CFR 1.16. The information is required to obtain or retain a benefit by the public which is to file (and by the USPTO to process) an application. Confidentiality is governed by 35 U.S.C. 122 and 37 CFR 1.14. This collection is estimated to take 12 minutes to complete, including gathering, preparing, and submitting the completed application form to the USPTO. Time will vary depending upon the individual case. Any comments on the amount of time you require to complete this form and/or suggestions for reducing this burden, should be sent to the Chief Information Officer, U.S. Patent and Trademark Office, U.S. Department of Commerce, P.O. Box 1450, Alexandria, VA 22313-1450. DO NOT SEND FEES OR COMPLETED FORMS TO THIS ADDRESS. **SEND TO: Commissioner for Patents, P.O. Box 1450, Alexandria, VA 22313-1450.**
If you need assistance in completing the form, call 1-800-PTO-9199 and select option 2.

IN THE UNITED STATES PATENT AND TRADEMARK OFFICE

Applicant	:	Philippe Kahn, et al.	Examiner:	Cosimano, Edward R
Appl. No.	:	13/018,321	Art Unit:	2857
Filed	:	January 31, 2011	Conf No:	8340
For	:	Human Activity Monitoring Device		
Customer No.	:	08791		

CERTIFICATE OF TRANSMISSION
I hereby certify that this correspondence is being submitted electronically via EFS Web on the date shown below.

/Judith Szepesi/ April 19, 2013
Judith A. Szepesi ***Date***

Mail Stop AF
Commissioner for Patents
P.O. Box 1450
Alexandria, Virginia 22313-1450

AMENDMENT

Sir:

In response to the Office Action of February 19, 2013, which was made final, applicants respectfully request the Examiner to enter the following amendments and consider the following remarks:

Amendments to the Claims begin on page 2 of this paper.
Remarks/Arguments begin on page 6 of this paper.

Amendments to the Claims:

The listing of claims will replace all prior versions, and listings, of claims in the application:

Listing of Claims:

1. (Previously Presented) A method of monitoring human activity using an inertial sensor, comprising:

assigning a dominant axis with respect to gravity based on an orientation of the inertial sensor;

detecting a change in the orientation of the inertial sensor and updating the dominant axis based on the change; and

counting periodic human motions by monitoring accelerations relative to the dominant axis by counting the periodic human motions when accelerations showing a motion cycle that meets motion criteria is detected within a cadence window; and

updating the cadence window as actual cadence changes.

2. (Original) The method of claim 1, further comprising:

using acceleration measurements along only the dominant axis to count steps.

3. (Canceled)

4. (Currently Amended) The method of claim 1 [[3]], wherein at least one of the motion criteria is a dynamic motion criterion, the dynamic motion criterion updated to reflect current conditions.

5. (Original) The method of claim 4, wherein the dynamic motion criteria includes at least a lower threshold, wherein the lower threshold is adjusted based on at least one of a rolling average of accelerations and the orientation of the inertial sensor.

6. (Previously Presented) A method of monitoring human activity using an inertial sensor, comprising:

LGE v. Uniloc USA Page 83 of 454 LGE Exhibit 1002

buffering a plurality of periodic human motions, each periodic human motion comprising a motion cycle;

identifying a number of periodic human motions within an appropriate cadence window;

counting each of the periodic human motions to enable the monitoring of human activity; and

updating the cadence window as a cadence of the motion cycle changes.

7. (Original) The method of claim 6, wherein prior to identifying, the inertial sensor is in a non-active mode, and wherein the non-active mode comprises running the device in one of an exit mode and an entry mode.

8. (Original) The method of claim 7, wherein:

a requirement for switching the device from the exit mode to an active mode is lower than a requirement for switching the device from the entry mode to the active mode.

9. (Original) The method of claim 6, further comprising:

switching the device from the active mode to the non-active mode when a number of expected periodic human motions are not identified in the appropriate cadence windows.

10. (Original) The method of claim 6, further comprising:

switching from a sleep mode to the non-active mode of operation when an acceleration is detected.

11. (Currently Amended) An inertial sensor based device, comprising:

a dominant axis logic to determine an orientation of a device with respect to gravity, to assign a dominant axis, and to update the dominant axis when the orientation of the device changes; and

a counting logic to count periodic human motions by monitoring accelerations relative to the dominant axis by counting the periodic human motions when

accelerations showing a motion cycle that meets motion criteria is detected within a cadence window; and

a cadence logic to update the cadence window as actual cadence changes.

[[.]]

12. (Original) The device of claim 11, wherein:

the counting logic uses acceleration measurements along only the dominant axis to count steps.

13. (Previously Presented) The device of claim 11, further comprising:

the cadence logic to update a dynamic cadence window; and

the counting logic to count a periodic human motion when an acceleration measurement that meets motion criteria is taken within the cadence window.

14. (Original) The device of claim 11, further comprising:

a comparator, to compare measurements of acceleration to dynamic motion criteria, the dynamic motion criteria updated to reflect current conditions; and

the counting logic to count a periodic human motion when the measurements of acceleration satisfy the dynamic motion criteria.

15. (Previously Presented) A non-transitory machine readable medium containing executable computer program instructions which, when executed by a processing system, cause said system to perform a method for:

assigning a dominant axis with respect to gravity based on an orientation of the inertial sensor;

detecting a change in the orientation of the inertial sensor and update the dominant axis based on the change; and

counting periodic human motions by monitoring accelerations relative to the dominant axis by counting the periodic human motions when accelerations showing a motion cycle that meets motion criteria is detected within a cadence window; and

updating the cadence window as actual cadence changes.

16. (Original) The non-transitory machine readable medium containing executable computer program instructions of claim 15, which, when executed by the processing system, cause said system to perform the method further for:

using acceleration measurements along only the dominant axis to count steps.

17. (Original) The non-transitory machine readable medium containing executable computer program instructions of claim 15, which, when executed by the processing system, cause said system to perform the method further for:

maintaining a cadence window, wherein the cadence window is updated as an actual cadence changes; and

counting a periodic human motion when an acceleration measurement that meets motion criteria is within the cadence window.

18. (Original) The non-transitory machine readable medium containing executable computer program instructions of claim 17, wherein at least one of the motion criteria is a dynamic motion criterion, the dynamic motion criterion updated to reflect current conditions.

19. (Original) The non-transitory machine readable medium containing executable computer program instructions of claim 18, wherein the dynamic motion criteria includes at least a lower threshold, wherein the lower threshold is adjusted based on at least one of a rolling average of accelerations and the orientation of the inertial sensor.

20. (Original) The non-transitory machine readable medium containing executable computer program instructions of claim 15, which, when executed by the processing system, cause said system to perform the method further for:

switching the device from an active mode to a non-active mode when a number of expected periodic human motions are not identified in the appropriate cadence windows.

Remarks/Arguments

Applicants respectfully request consideration of the subject application as amended herein. This Amendment is submitted in response to the Office Action mailed February 19, 2013. Claims 1, 2, and 4-20 are rejected.

In this Amendment, claims 4 and 11 have been amended. No claims have been canceled or added. It is respectfully submitted that the amendment does not add new matter.

Applicants reserve all rights with respect to the applicability of the Doctrine of Equivalents.

Allowed Claims

Applicants thank the Examiner for the careful examination and for holding the claims allowable.

Objections

Claims 4, 5, and 11 are objected to because of informalities. Applicants have amended claim 4 to correct the dependency. Claim 5 depends on claim 4, and thus has correct dependency. Applicants have amended claim 11 to remove the extraneous period on the next line. Therefore, Applicants respectfully request withdrawal of these objections.

Double Patenting Rejection

Claims 1-5 and 11-20 are provisionally rejected under the judicially created doctrine of obviousness-type double patenting as being unpatentable over claims 1-5 and 11-14 of U.S. Patent No. 7,653,508 issued January 26, 2010. Claims 6-10 are provisionally rejected under the judicially created doctrine of obviousness-type double patenting as being unpatentable over claims 6-10 and 15-20 of U.S. Patent No. 7,653,508 issued January 26, 2010.

Applicants are enclosing a signed Terminal Disclaimer with respect to U.S. Patent 7,653,508. Applicants respectfully request entry of the terminal disclaimer, and withdrawal of the double patenting rejection.

Conclusion

Applicant respectfully submits that in view of the amendments and discussion set forth herein, the applicable rejections have been overcome. Accordingly, the present and amended claims should be found to be in condition for allowance.

If a telephone interview would expedite the prosecution of this application, the Examiner is invited to contact Judith A. Szepesi at (408) 720-8300.

If there are any additional charges/credits, please charge/credit our deposit account no. 02-2666.

Respectfully submitted,

BLAKELY, SOKOLOFF, TAYLOR & ZAFMAN LLP

Dated: April 19, 2013

/Judith Szepesi/
Judith A. Szepesi
Reg. No. 39,393

1279 Oakmead Parkway
Sunnyvale, CA 94085
(408) 720-8300

PTO/SB/26 (08-11)
Approved for use through 07/31/2012. OMB 0651-0031
U.S. Patent and Trademark Office; U.S. DEPARTMENT OF COMMERCE
Under the Paperwork Reduction Act of 1995, no persons are required to respond to a collection of information unless it displays a valid OMB control number.

TERMINAL DISCLAIMER TO OBVIATE A DOUBLE PATENTING REJECTION OVER A "PRIOR" PATENT	Docket Number (Optional) 8689P027C2

In re Application of: Philippe Kahn, et al.

Application No.: 13/018,321

Filed: January 31, 2011

For: Human Activity Monitoring Device

The owner*, DP Technologies, Inc., of 100 percent interest in the instant application hereby disclaims, except as provided below, the terminal part of the statutory term of any patent granted on the instant application which would extend beyond the expiration date of the full statutory term of **prior patent** No. 7,653,508 as the term of said **prior patent** is presently shortened by any terminal disclaimer. The owner hereby agrees that any patent so granted on the instant application shall be enforceable only for and during such period that it and the **prior patent** are commonly owned. This agreement runs with any patent granted on the instant application and is binding upon the grantee, its successors or assigns.

In making the above disclaimer, the owner does not disclaim the terminal part of the term of any patent granted on the instant application that would extend to the expiration date of the full statutory term of the **prior patent**, "as the term of said **prior patent** is presently shortened by any terminal disclaimer," in the event that said **prior patent** later:

expires for failure to pay a maintenance fee;
is held unenforceable;
is found invalid by a court of competent jurisdiction;
is statutorily disclaimed in whole or terminally disclaimed under 37 CFR 1.321;
has all claims canceled by a reexamination certificate;
is reissued; or
is in any manner terminated prior to the expiration of its full statutory term as presently shortened by any terminal disclaimer.

Check either box 1 or 2 below, if appropriate.

1. ☐ For submissions on behalf of a business/organization (e.g., corporation, partnership, university, government agency, etc.), the undersigned is empowered to act on behalf of the business/organization.

I hereby declare that all statements made herein of my own knowledge are true and that all statements made on information and belief are believed to be true; and further that these statements were made with the knowledge that willful false statements and the like so made are punishable by fine or imprisonment, or both, under Section 1001 of Title 18 of the United States Code and that such willful false statements may jeopardize the validity of the application or any patent issued thereon.

2. ☑ The undersigned is an attorney or agent of record. Reg. No. 39,393

Judith Szepesi/ — Signature
April 19, 2013 — Date

Judith A. Szepesi — Typed or printed name

(408) 720-8300 — Telephone Number

☑ Terminal disclaimer fee under 37 CFR 1.20(d) included.

WARNING: Information on this form may become public. Credit card information should not be included on this form. Provide credit card information and authorization on PTO-2038.

*Statement under 37 CFR 3.73(b) is required if terminal disclaimer is signed by the assignee (owner).
Form PTO/SB/96 may be used for making this certification. See MPEP § 324.

This collection of information is required by 37 CFR 1.321. The information is required to obtain or retain a benefit by the public which is to file (and by the USPTO to process) an application. Confidentiality is governed by 35 U.S.C. 122 and 37 CFR 1.11 and 1.14. This collection is estimated to take 12 minutes to complete, including gathering, preparing, and submitting the completed application form to the USPTO. Time will vary depending upon the individual case. Any comments on the amount of time you require to complete this form and/or suggestions for reducing this burden, should be sent to the Chief Information Officer, U.S. Patent and Trademark Office, U.S. Department of Commerce, P.O. Box 1450, Alexandria, VA 22313-1450. DO NOT SEND FEES OR COMPLETED FORMS TO THIS ADDRESS. **SEND TO: Commissioner for Patents, P.O. Box 1450, Alexandria, VA 22313-1450.**

If you need assistance in completing the form, call 1-800-PTO-9199 and select option 2.

Privacy Act Statement

The **Privacy Act of 1974 (P.L. 93-579)** requires that you be given certain information in connection with your submission of the attached form related to a patent application or patent. Accordingly, pursuant to the requirements of the Act, please be advised that: (1) the general authority for the collection of this information is 35 U.S.C. 2(b)(2); (2) furnishing of the information solicited is voluntary; and (3) the principal purpose for which the information is used by the U.S. Patent and Trademark Office is to process and/or examine your submission related to a patent application or patent. If you do not furnish the requested information, the U.S. Patent and Trademark Office may not be able to process and/or examine your submission, which may result in termination of proceedings or abandonment of the application or expiration of the patent.

The information provided by you in this form will be subject to the following routine uses:

1. The information on this form will be treated confidentially to the extent allowed under the Freedom of Information Act (5 U.S.C. 552) and the Privacy Act (5 U.S.C 552a). Records from this system of records may be disclosed to the Department of Justice to determine whether disclosure of these records is required by the Freedom of Information Act.
2. A record from this system of records may be disclosed, as a routine use, in the course of presenting evidence to a court, magistrate, or administrative tribunal, including disclosures to opposing counsel in the course of settlement negotiations.
3. A record in this system of records may be disclosed, as a routine use, to a Member of Congress submitting a request involving an individual, to whom the record pertains, when the individual has requested assistance from the Member with respect to the subject matter of the record.
4. A record in this system of records may be disclosed, as a routine use, to a contractor of the Agency having need for the information in order to perform a contract. Recipients of information shall be required to comply with the requirements of the Privacy Act of 1974, as amended, pursuant to 5 U.S.C. 552a(m).
5. A record related to an International Application filed under the Patent Cooperation Treaty in this system of records may be disclosed, as a routine use, to the International Bureau of the World Intellectual Property Organization, pursuant to the Patent Cooperation Treaty.
6. A record in this system of records may be disclosed, as a routine use, to another federal agency for purposes of National Security review (35 U.S.C. 181) and for review pursuant to the Atomic Energy Act (42 U.S.C. 218(c)).
7. A record from this system of records may be disclosed, as a routine use, to the Administrator, General Services, or his/her designee, during an inspection of records conducted by GSA as part of that agency's responsibility to recommend improvements in records management practices and programs, under authority of 44 U.S.C. 2904 and 2906. Such disclosure shall be made in accordance with the GSA regulations governing inspection of records for this purpose, and any other relevant (*i.e.*, GSA or Commerce) directive. Such disclosure shall not be used to make determinations about individuals.
8. A record from this system of records may be disclosed, as a routine use, to the public after either publication of the application pursuant to 35 U.S.C. 122(b) or issuance of a patent pursuant to 35 U.S.C. 151. Further, a record may be disclosed, subject to the limitations of 37 CFR 1.14, as a routine use, to the public if the record was filed in an application which became abandoned or in which the proceedings were terminated and which application is referenced by either a published application, an application open to public inspection or an issued patent.
9. A record from this system of records may be disclosed, as a routine use, to a Federal, State, or local law enforcement agency, if the USPTO becomes aware of a violation or potential violation of law or regulation.

Electronic Patent Application Fee Transmittal	
Application Number:	13018321
Filing Date:	31-Jan-2011
Title of Invention:	HUMAN ACTIVITY MONITORING DEVICE
First Named Inventor/Applicant Name:	Philippe Kahn
Filer:	Judith A. Szepesi
Attorney Docket Number:	8689P027C2
Filed as Large Entity	

Utility under 35 USC 111(a) Filing Fees

Description	Fee Code	Quantity	Amount	Sub-Total in USD($)
Basic Filing:				
Pages:				
Claims:				
Miscellaneous-Filing:				
Petition:				
Patent-Appeals-and-Interference:				
Post-Allowance-and-Post-Issuance:				
Extension-of-Time:				

Description	Fee Code	Quantity	Amount	Sub-Total in USD($)
Miscellaneous:				
Statutory or Terminal Disclaimer	1814	1	160	160
		Total in USD ($)		**160**

Electronic Acknowledgement Receipt	
EFS ID:	15571040
Application Number:	13018321
International Application Number:	
Confirmation Number:	8340
Title of Invention:	HUMAN ACTIVITY MONITORING DEVICE
First Named Inventor/Applicant Name:	Philippe Kahn
Customer Number:	8791
Filer:	Judith A. Szepesi
Filer Authorized By:	
Attorney Docket Number:	8689P027C2
Receipt Date:	20-APR-2013
Filing Date:	31-JAN-2011
Time Stamp:	02:39:06
Application Type:	Utility under 35 USC 111(a)

Payment information:

Submitted with Payment	yes
Payment Type	Deposit Account
Payment was successfully received in RAM	$160
RAM confirmation Number	7433
Deposit Account	022666
Authorized User	

File Listing:

Document Number	Document Description	File Name	File Size(Bytes)/ Message Digest	Multi Part /.zip	Pages (if appl.)

1		8689P027C2_AmResp_April2013.pdf	91166 e390745e45a37911fcf9a92d9b08add3574a4376	yes	7
	Multipart Description/PDF files in .zip description				
	Document Description		**Start**	**End**	
	Amendment After Final		1	1	
	Claims		2	5	
	Applicant Arguments/Remarks Made in an Amendment		6	7	
Warnings:					
Information:					
2	Terminal Disclaimer Filed	8689P027C2_TD_7653508.pdf	131474 4f87f9660cf1ffdde53b5915778fb17a79c0fbd0	no	2
Warnings:					
Information:					
3	Fee Worksheet (SB06)	fee-info.pdf	30306 29fe00ad6dd85d45a4dcf00789b5ae9249cd4495	no	2
Warnings:					
Information:					
		Total Files Size (in bytes):	252946		

This Acknowledgement Receipt evidences receipt on the noted date by the USPTO of the indicated documents, characterized by the applicant, and including page counts, where applicable. It serves as evidence of receipt similar to a Post Card, as described in MPEP 503.

New Applications Under 35 U.S.C. 111
If a new application is being filed and the application includes the necessary components for a filing date (see 37 CFR 1.53(b)-(d) and MPEP 506), a Filing Receipt (37 CFR 1.54) will be issued in due course and the date shown on this Acknowledgement Receipt will establish the filing date of the application.

National Stage of an International Application under 35 U.S.C. 371
If a timely submission to enter the national stage of an international application is compliant with the conditions of 35 U.S.C. 371 and other applicable requirements a Form PCT/DO/EO/903 indicating acceptance of the application as a national stage submission under 35 U.S.C. 371 will be issued in addition to the Filing Receipt, in due course.

New International Application Filed with the USPTO as a Receiving Office
If a new international application is being filed and the international application includes the necessary components for an international filing date (see PCT Article 11 and MPEP 1810), a Notification of the International Application Number and of the International Filing Date (Form PCT/RO/105) will be issued in due course, subject to prescriptions concerning national security, and the date shown on this Acknowledgement Receipt will establish the international filing date of the application.

UNITED STATES PATENT AND TRADEMARK OFFICE

UNITED STATES DEPARTMENT OF COMMERCE
United States Patent and Trademark Office
Address: COMMISSIONER FOR PATENTS
P.O. Box 1450
Alexandria, Virginia 22313-1450
www.uspto.gov

APPLICATION NO.	FILING DATE	FIRST NAMED INVENTOR	ATTORNEY DOCKET NO.	CONFIRMATION NO.
13/018,321	01/31/2011	Philippe Kahn	8689P027C2	8340

8791 7590 02/19/2013

BLAKELY SOKOLOFF TAYLOR & ZAFMAN
1279 Oakmead Parkway
Sunnyvale, CA 94085-4040

EXAMINER	
COSIMANO, EDWARD R	
ART UNIT	PAPER NUMBER
2857	

MAIL DATE	DELIVERY MODE
02/19/2013	PAPER

Please find below and/or attached an Office communication concerning this application or proceeding.

The time period for reply, if any, is set in the attached communication.

Office Action Summary	Application No.	Applicant(s)	
	13/018,321	KAHN ET AL.	
	Examiner	Art Unit	
	EDWARD COSIMANO	2857	

-- The MAILING DATE of this communication appears on the cover sheet with the correspondence address --

Period for Reply

A SHORTENED STATUTORY PERIOD FOR REPLY IS SET TO EXPIRE *3* MONTH(S) OR THIRTY (30) DAYS, WHICHEVER IS LONGER, FROM THE MAILING DATE OF THIS COMMUNICATION.

- Extensions of time may be available under the provisions of 37 CFR 1.136(a). In no event, however, may a reply be timely filed after SIX (6) MONTHS from the mailing date of this communication.
- If NO period for reply is specified above, the maximum statutory period will apply and will expire SIX (6) MONTHS from the mailing date of this communication.
- Failure to reply within the set or extended period for reply will, by statute, cause the application to become ABANDONED (35 U.S.C. § 133). Any reply received by the Office later than three months after the mailing date of this communication, even if timely filed, may reduce any earned patent term adjustment. See 37 CFR 1.704(b).

Status

1)☒ Responsive to communication(s) filed on *29 January 2013*.

2a)☒ This action is **FINAL**. 2b)☐ This action is non-final.

3)☐ An election was made by the applicant in response to a restriction requirement set forth during the interview on _____; the restriction requirement and election have been incorporated into this action.

4)☐ Since this application is in condition for allowance except for formal matters, prosecution as to the merits is closed in accordance with the practice under *Ex parte Quayle*, 1935 C.D. 11, 453 O.G. 213.

Disposition of Claims

5)☒ Claim(s) *1,2 and 4-20* is/are pending in the application.

5a) Of the above claim(s) *none* is/are withdrawn from consideration.

6)☐ Claim(s) _____ is/are allowed.

7)☒ Claim(s) *1,2 and 4-20* is/are rejected.

8)☐ Claim(s) _____ is/are objected to.

9)☐ Claim(s) _____ are subject to restriction and/or election requirement.

* If any claims have been determined allowable, you may be eligible to benefit from the **Patent Prosecution Highway** program at a participating intellectual property office for the corresponding application. For more information, please see http://www.uspto.gov/patents/init_events/pph/index.jsp or send an inquiry to PPHfeedback@uspto.gov.

Application Papers

10)☐ The specification is objected to by the Examiner.

11)☒ The drawing(s) filed on *31 January 2011* is/are: a)☒ accepted or b)☐ objected to by the Examiner.

Applicant may not request that any objection to the drawing(s) be held in abeyance. See 37 CFR 1.85(a).

Replacement drawing sheet(s) including the correction is required if the drawing(s) is objected to. See 37 CFR 1.121(d).

Priority under 35 U.S.C. § 119

12)☐ Acknowledgment is made of a claim for foreign priority under 35 U.S.C. § 119(a)-(d) or (f).

a)☐ All b)☐ Some * c)☐ None of:

1.☐ Certified copies of the priority documents have been received.

2.☐ Certified copies of the priority documents have been received in Application No. _____.

3.☐ Copies of the certified copies of the priority documents have been received in this National Stage application from the International Bureau (PCT Rule 17.2(a)).

* See the attached detailed Office action for a list of the certified copies not received.

Attachment(s)

1) ☐ Notice of References Cited (PTO-892)

2) ☒ Information Disclosure Statement(s) (PTO/SB/08) Paper No(s)/Mail Date *01/29/2013*.

3) ☐ Interview Summary (PTO-413) Paper No(s)/Mail Date. _____ .

4) ☐ Other: _____.

1. EXAMINER'S COMMENT

1.1 When preparing this Office action the Examiner considers the instant application to include:

A) the copy of the Oath/Declaration from parent application serial number 11/644,455 which was filed on 31 January 2011 and that is acceptable to the Examiner;

B) the content of the Abstract which was filed on 31 August 2011 and that is acceptable to the Examiner;

C) figures 1, 2, 3, 4, 5, 6, 7, 8 & 9 of the set of drawings containing 9 sheets of 9 figures comprising figures 1, 2, 3, 4, 5, 6, 7, 8 & 9 as presented in the set of drawings filed on 31 January 2011 where the content of figures 3, 4, 5, 6, 7, 8 & 9 of the above set of drawings is acceptable to the Examiner;

D) the written description as filed on 31 January 2011 and amended on 09 January 2012;

E) the set of 19 claims comprising claims 1, 2 & 4-20 with 4 independent claims as filed on 29 January 2013; and

F) the NON-Publication request filed on 31 January 2011.

2. BENEFIT OF AN EARLIER FILING DATE

2.1 Applicant's claim for the benefit of an earlier filing date pursuant to 35 U.S.C. 120 is acknowledged.

3. PRIOR ART FROM EARLIER APPLICATIONS

3.1 The Examiner has considered the prior art cited in the applications for which Applicant has claimed the benefit of an earlier filing date pursuant to 35 U.S.C. 120.

3.1.1 If Applicant wishes any of the prior art that was cited in each of the base applications but that has not been cited during the prosecution of the instant application to appear on any Patent granted on the instant application, then Applicant must provide a properly completed PTO-1449 containing proper citations of the prior art that Applicant wishes to appear on any Patent that may be granted on the instant application.

4. INFORMATION DISCLOSURE STATEMENT (IDS)

4.1 The Examiner notes that each of the Non Patent Literature documents that have been crossed off the IDS that was filed on 16 May 2011 have been crossed off because the citation of each of these documents is a duplicate of the same document which has been cited on the IDS filed on 31 January 2011 and that has been considered by the Examiner as indicated on the copy of the IDS filed on 31 January 2011 which was attached to the Office action mailed 08 November 2011.

4.2 The IDS filed on 09 January 2012 fails to comply with the provisions of 37 CFR 1.97 and MPEP § 609 because:

A) it fails to comply with 37 CFR 1.97(d) because it lacks a statement as specified in 37 CFR 1.97(e).

It has been placed in the application file, but the information referred to therein has not been considered as to the merits. Applicant is advised that the date of any re-submission of any item of information contained in this information disclosure statement or the submission of any missing element(s) will be the date of submission for purposes of determining compliance with the requirements based on the time of filing the statement, including all certification requirements for statements under 37 CFR 1.97(e). See MPEP § 609.05(a).

4.2.1 In regard to the IDS filed on 09 January 2012, the Examiner notes that in view of the Ex Parte Quayle action mailed on 08 November 2011 that closed prosecution on the merits, the IDS must be submitted pursuant to 37 CFR 1.97(d) and not 37 CFR 1.97(c) as set forth by Applicant in the IDS transmittal letter. Further pursuant to 37 CFR 1.97(d) while the IDS submission lacks the required certification statement, see 37 CFR 1.97(e), the IDS submission does include the required fee.

5. FINAL ACTION

5.1 **THIS ACTION IS MADE FINAL.** Applicant is reminded of the extension of time policy as set forth in 37 CFR 1.136(a).

5.1.1 A shortened statutory period for reply to this final action is set to expire THREE MONTHS from the mailing date of this action. In the event a first reply is filed within TWO MONTHS of the mailing date of this final action and the advisory action is not mailed until after the end of the THREE-MONTH shortened statutory period, then the shortened statutory period will expire on the date the advisory action is mailed, and any extension fee pursuant to 37 CFR 1.136(a) will be calculated from the mailing date of the advisory action. In no event, however, will the statutory period for reply expire later than SIX MONTHS from the date of this final action.

6. THE MEANING AND SCOPE OF THE CLAIMED INVENTION

6.1 First, in regard to claims 1, 2 & 4-20, it is noted that the Courts have held that the language used by Applicant in order to set forth or define the subject matter of any claimed invention must be interpreted from the perspective of how one of ordinary skill at the time the invention was made would have fairly and reasonably interpreted the language that has been used by the Applicant in order to set forth or define the subject matter of any claimed invention, see In re MORRIS, 44 USPQ2d 1023 at 1027-28 (Fed. Cir., 1997). Where the Courts have held that the broadest reasonable interpretation of the language that has been used by the Applicant in order to set forth or define the subject matter of any claimed invention must:

A) as set forth in In re CORTRIGHT, 49 USPQ2d 1464 at 1468 (Fed. Cir., 1999) be consistent with the written description; and

B) as set forth in In re PRATER AND WEI, 162 USPQ 541 at 551 (CCPA, 1969) must NOT add limitations or distinctions or merits from the written description in to the claimed invention that have not been expressly recited within the claimed invention as being part of the claimed invention, see In re PRATER AND WEI, supra, "We are not persuaded by any sound reason why, at any time before the patent is granted, an Applicant should have limitations of the specification read into a claim where no express statement of the limitation is included in the claim.".

When one of ordinary skill at the time the invention was made fairly and reasonably gives the language that has been used by Applicant in order to set forth or define the claimed invention the broadest reasonable interpretation, then one of ordinary skill at the time the invention was made would have fairly and reasonably recognized that Applicant has chosen to set forth or define the claimed invention by setting forth one or more actions in claims 1, 2 & 4-10 and by setting forth one or more structures in claims 11-20 that perform broadly recited functions because:

A) Applicant has not recited any specific action or specific structure that is to be used in order to implement or achieve any of the functions that have been recited as being the claimed invention; and

B) Applicant has not recited any specifics details of how the claimed invention is to implement or achieve any of the functions that have been recited as being performed by the claimed invention.

Hence, one of ordinary skill at the time the invention was made would have fairly and reasonably recognized that the scope of the claimed invention would include any and all structures or actions that one of ordinary skill at the time the invention was made would have fairly and reasonably recognized as performing the one or more of the recited functions of the claimed invention regardless of what structures or actions are being used as taught or suggested by the prior art in order to implement or achieve each of the recited functions of the claimed invention.

6.2 In view of the above, regardless of either:

A) what one of ordinary skill at the time the invention was made would have fairly and reasonably recognized as being taught or suggested by the prior art as the intended purpose of any structure or action which performs one or more of the recited functions of the claimed invention; or

B) what structures/actions Applicant has described within the context of written description, but has not explicitly recited within the context of claimed invention, hence are intended by Applicant to be used in order to implement any particular function of the claimed invention; or

C) how Applicant has described within the context of written description how a claimed function is to be performed, but has not explicitly recited within the context of claimed

invention, hence are intended by Applicant to be used in order to implement any particular function of the claimed invention;

then one of ordinary skill at the time the invention was made would have fairly and reasonably recognized that the scope of the claimed invention would include the use of one or more actions in claims 1, 2 & 4-10 and/or the use one or more structures in claims 11-20 that one of ordinary skill at the time the invention was made would have fairly and reasonably recognized as performing all the functions that have been explicitly recited within the context of the claimed invention as being performed by the claimed invention regardless of how the prior art actually teaches or suggests that the functions of the claimed invention would be implemented or achieved.

7. OBJECTIONS TO THE CLAIMS

7.1 Claims 4-5 & 11 are objected to because of the following informalities.

7.1.1 In regard to claims 4 & 5, these claims are confusing and inconsistent.

7.1.1.1 As one of ordinary skill at the time the invention was made would have fairly and reasonably interpreted the language that has been used by Applicant in order to set forth or define the invention of these claims, then one of ordinary skill at the time the invention was made would have fairly and reasonably recognized that these claims:

A) are directed to an invention that is in the statutory class of a "process", see the preamble;

B) are dependent claims because this claim makes an explicit reference to another claim, that is claim 3 in regard to claim 4 and claim 4 in regard to claim 5; and

C) recites the invention by defining one or more items data/information that are to be used in the process.

7.1.1.2 However, as one of ordinary skill at the time the invention was made would have fairly and reasonably interpreted the language that has been used by Applicant in order to set forth or define the invention, then one of ordinary skill at the time the invention was made would have

fairly and reasonably recognized that claim 3 has been cancelled by the amendment filed on 29 January 2013.

7.1.1.3 Further, as one of ordinary skill at the time the invention was made would have fairly and reasonably interpreted the language that has been used by Applicant in order to set forth or define the invention, then one of ordinary skill at the time the invention was made would have fairly and reasonably recognized that:

A) claim 1 has been amended by the amendment filed on 29 January 2013 to include the subject matter previous recited in claim 3 as presented on 31 January 2011;

B) is directed to an invention that is in the statutory class of a "process", see the preamble;

C) is an independent claim because this claim does not make an explicit reference to any other claim; and

D) recites the invention by defining one or more items action to be performed by the process.

7.1.1.4 In view of the above, one of ordinary skill at the time the invention was made would have not been able to fairly and reasonably interpreted the language that has been used by Applicant in order to set forth or define the invention of claims 4 & 5 in order to determine the scope and meaning of the claimed invention and hence, one of ordinary skill at the time the invention was made would have fairly and reasonably found claims 4 & 4 to be inconsistent and confusing.

7.1.2 In regard to claim 11, since claim 11 appears to end with a first "." (period) after the phrase "the cadence window as actual cadence changes" and then a second "." (period) on the next line, it is unclear where claim 11 ends.

7.1 Appropriate correction is required.

8. DOUBLE PATENTING UNDER 35 U.S.C. 101

8.1 The nonstatutory double patenting rejection is based on a judicially created doctrine grounded in public policy (a policy reflected in the statute) so as to prevent the unjustified or improper timewise extension of the "right to exclude" granted by a patent and to prevent possible harassment by multiple assignees. A nonstatutory obviousness-type double patenting rejection is appropriate where the conflicting claims are not identical, but at least one examined application claim is not patentably distinct from the reference claim(s) because the examined application claim is either anticipated by, or would have been obvious over, the reference claim(s). See, e.g., *In re Berg*, 140 F.3d 1428, 46 USPQ2d 1226 (Fed. Cir., 1998); *In re Goodman*, 11 F.3d 1046, 29 USPQ2d 2010 (Fed. Cir., 1993); *In re Longi*, 759 F.2d 887, 225 USPQ 645 (Fed. Cir., 1985); *In re Van Ornum*, 686 F.2d 937, 214 USPQ 761 (CCPA, 1982); *In re Vogel*, 422 F.2d 438, 164 USPQ 619 (CCPA, 1970); and *In re Thorington*, 418 F.2d 528, 163 USPQ 644 (CCPA, 1969).

8.1.1 A timely filed terminal disclaimer in compliance with 37 CFR 1.321(c) or 1.321(d) may be used to overcome an actual or provisional rejection based on a nonstatutory double patenting ground provided the conflicting application or patent either is shown to be commonly owned with this application, or claims an invention made as a result of activities undertaken within the scope of a joint research agreement.

8.1.2 Effective January 1, 1994, a registered attorney or agent of record may sign a terminal disclaimer. A terminal disclaimer signed by the assignee must fully comply with 37 CFR 3.73(b).

8.2 OBVIOUS DOUBLE PATENTING

8.2.1 Claims 1, 2, 4, 5 & 11-20 are rejected on the ground of nonstatutory obviousness-type double patenting as being unpatentable over claims 1-5 & 11-14 of U.S. Patent No. 7,653,508.

8.2.1.1 Although the conflicting claims are not identical, they are not patentably distinct from each other because one of ordinary skill at the time the invention was made would have fairly and reasonably recognized that both sets of claims recite the same subject matter of:

"assigning a dominant axis based on an orientation of the inertial sensor";

"detecting a change in the orientation of the inertial sensor and updating the dominant axis based on the change"; and

"counting periodic human motions by monitoring accelerations relative to the dominant axis based upon acceleration measurements along only the dominant axis to count steps".

8.2.1.2 However, one of ordinary skill at the time the invention was made would have fairly and reasonably recognized that claims 1-5 & 11-14 of U.S. Patent No. 7,653,508 do not recite that the functions of "assigning a dominant axis based on an orientation of the inertial sensor" and "detecting a change in the orientation of the inertial sensor and updating the dominant axis based on the change" are performed with respect to "gravity" as recited in claims 1, 2, 4, 5 & 11-20 of the instant application. In this regard as taught or suggested at column 6, lines 7-36: "In one embodiment … adjacency matrix, etc.", of U.S. Patent No. 7,653,508 one of ordinary skill at the time the invention was made would have fairly and reasonably recognized that the dominate axis is assigned based on the orientation of the inertial sensor where the orientation of the inertial sensor is determined based upon either:

A) a determination of the axis with the largest average acceleration; or

B) the direction of gravity.

In view of this teaching or suggestion and the fact that one of ordinary skill at the time the invention was made would have fairly and reasonably recognized that claims 1-5 & 11-14 of U.S. Patent No. 7,653,508 do not explicitly exclude using gravity in order to perform the functions of "assigning a dominant" or "detecting a change in the orientation of the inertial sensor and updating the dominant axis based on the change", then one of ordinary skill at the time the invention was made would have fairly and reasonably recognized that the scope of claims 1-5 & 11-14 of U.S. Patent No. 7,653,508 would include at least one embodiment in which gravity is sued in order to perform the functions of "assigning a dominant" or "detecting a change in the orientation of the inertial sensor and updating the dominant axis based on the change" as recited in claims 1, 2, 4, 5 & 11-20 of the instant application.

8.2.1.3 However, one of ordinary skill at the time the invention was made would have fairly and reasonably recognized that claims 1-5 & 11-14 of U.S. Patent No. 7,653,508 recite that the

function of "detecting a change in the orientation of the inertial sensor and updating the dominant axis based on the change" is continuously performed, whereas claims 1, 2, 4, 5 & 11-20 of the instant application do not:

A) explicitly require this function to be continuously performed; or

B) explicitly prohibit this function from being continuously performed.

In view of the fact that claims 1, 2, 4, 5 & 11-20 of the instant application do not explicitly require this function to be continuously performed, then one of ordinary skill at the time the invention was made would have fairly and reasonably recognized that the scope of claims 1, 2, 4, 5 & 11-20 of the instant application would include embodiments in which:

A) this function is continuously performed by the invention; and

B) this function is not continuously performed by the invention.

then one of ordinary skill at the time the invention was made would have fairly and reasonably recognized that the scope of claims 1, 2, 4, 5 & 11-20 of the instant application would include at least one embodiment in which the function of "detecting a change in the orientation of the inertial sensor and updating the dominant axis based on the change" is continuously performed as recited in claims 1-5 & 11-14 of U.S. Patent No. 7,653,508.

8.2.1.4 However, one of ordinary skill at the time the invention was made would have fairly and reasonably recognized that claims 1, 2, 4, 5 & 11-14 of U.S. Patent No. 7,653,508 do not recite performing the functions "counting periodic human motions by monitoring accelerations relative to the dominant axis by counting the periodic human motions when accelerations showing a motion cycle that meets motion criteria is detected within a cadence window" and "updating the cadence window as actual cadence changes" as recited in claims 1, 2, 4, 5 & 11-20 of the instant application. Further, one of ordinary skill at the time the invention was made would have fairly and reasonably recognized that claim 3, which depends from claim 1, of U.S. Patent No. 7,653,508 does recite performing the functions "counting periodic human motions by monitoring accelerations relative to the dominant axis by counting the periodic human motions when accelerations showing a motion cycle that meets motion criteria is detected within a cadence window" and "updating the cadence window as actual cadence changes" as recited in claims 1, 2, 4, 5 & 11-20 of the instant application. In view of the fact that claims 1, 2, 4, 5 & 11-14 of

U.S. Patent No. 7,653,508 do not explicitly require these functions to be performed while claim 3, which depends from claim 1, of U.S. Patent No. 7,653,508 does require this function to be performed, then one of ordinary skill at the time the invention was made would have fairly and reasonably recognized that the scope of claims 1, 2, 4, 5 & 11-14 of U.S. Patent No. 7,653,508 would include embodiments in which:

A) these functions are performed by the invention; and

B) these functions are not performed by the invention.

and one of ordinary skill at the time the invention was made would have fairly and reasonably recognized that the scope of claims 1, 2, 4, 5 & 11-14 of U.S. Patent No. 7,653,508 would include at least one embodiment in which the functions of "counting periodic human motions by monitoring accelerations relative to the dominant axis by counting the periodic human motions when accelerations showing a motion cycle that meets motion criteria is detected within a cadence window" and "updating the cadence window as actual cadence changes" as recited in claims 1, 2, 4, 5 & 11-20 of the instant application are performed by the invention.

8.2.1.5 In regard to the invention of claims 15-20 of the instant application and claims 1-5 & 11-14 of U.S. Patent No. 7,653,508, it is noted that one of ordinary skill at the time the invention was made would have fairly and reasonably recognized that the invention of claims 1-5 & 11-14 of U.S. Patent No. 7,653,508 are implemented using a programmed computer or processor and therefore require the use of the media of claims 1, 2, 4, 5 & 11-20 of the instant application and hence claims 1, 2, 4, 5 & 11-20 of the instant application are an obvious variation of the invention recited in claims 1-5 & 11-14 of U.S. Patent No. 7,653,508.

8.2.1.6 In view of the above, then one of ordinary skill at the time the invention was made would have fairly and reasonably recognized that the invention of claims 1-5 & 11-14 of U.S. Patent No. 7,653,508 and the invention of claims 1, 2, 4, 5 & 11-20 of the instant application and hence claims 1, 2, 4, 5 & 11-20 of the instant application are an obvious variation of the invention recited in claims 1-5 & 11-14 of U.S. Patent No. 7,653,508.

8.2.2 Claims 6-10 are rejected on the ground of nonstatutory obviousness-type double patenting as being unpatentable over claims 6-10 & 15-20 of U.S. Patent No. 7,653,508.

8.2.2.1 Although the conflicting claims are not identical, they are not patentably distinct from each other because one of ordinary skill at the time the invention was made would have fairly and reasonably recognized that both sets of claims recite the same subject matter of:

"buffering a plurality of periodic human motions";

"identifying a number of periodic human motions within appropriate cadence windows"; and

"counting each of the periodic human motions to enable the monitoring of human activity".

However, one of ordinary skill at the time the invention was made would have fairly and reasonably recognized that claims 6-10 & 15-20 of U.S. Patent No. 7,653,508 recite that the function of "identifying a number of periodic human motions within appropriate cadence windows" is to be performed by a "switching device" in claims 6-10 and "mode logic" in claims 15-20, whereas claims 6-10 of the instant application do not require the use of either of these devices when performing this function.

8.2.2.2 One of ordinary skill at the time the invention was made would have fairly and reasonably recognized that the scope of claims 6-10 of the instant application would include embodiments in which the function of "identifying a number of periodic human motions within appropriate cadence windows" could be performed by any suitable device such as the "switching device" recited in claims 6-10 of U.S. Patent No. 7,653,508 or the "mode logic" in claims 15-20 of U.S. Patent No. 7,653,508.

8.2.2.3 Since one of ordinary skill at the time the invention was made would have fairly and reasonably recognized that:

A) the scope of claims 6-10 of the instant application would include embodiments in which the function of "identifying a number of periodic human motions within appropriate cadence windows" is performed:

(1) as recited in claims 6-10 & 15-20 of U.S. Patent No. 7,653,508; or

(2) by using any suitable structure/action that could "identifying a number of periodic human motions within appropriate cadence windows";

then one of ordinary skill at the time the invention was made would have fairly and reasonably recognized that claims 6-10 of the instant application are an obvious variation of the invention recited in claims 6-10 & 15-20 of U.S. Patent No. 7,653,508.

9. RESPONSE TO APPLICANT'S AMENDMENTS/ARGUMENTS

9.1 The objections and/or rejections that have not been repeated herein have been overcome by Applicant's last response.

9.2 THE DOUBLE PATENTING REJECTION

9.2.1 Because Applicant did not file an accepted terminal disclaimer or amend the claims to have a different scope, see the above modified rejection, the Examiner has maintained the Double Patenting rejection of the claimed invention.

10. REASONS FOR ALLOWANCE

10.1 The following is a statement of reasons for the indication of allowable subject matter over the prior art:

A) for example:

(1) either Smith et al (5,485,402) or Richardson et al (5,976,083 or 6,135,951) or Ebeling et al (6,145,389) or Sakuria et al (6,369,794) or Kubo et al (2002/0089425 or 6,700,499) or Ladetto et al (2003/0018430 or 6,826,477) or Darley (6,611,789 or 2007/0061105 or 2007/0208531 or 7,428,471 or 7,617,071 or 2010/0057398 or 7,962,312) or Tsuji (2005/0232388 or 2005/0238132 or JP 2005-309691 A or 7,169,084 or 7,297,088) or Seo et al (2006/0020177 or 7,334,472) or Skvortsov et al (2006/0174685 or 7,305,323) or Park et al (2007/0067094 or 7,640,134) or Pasolini et al (2007/0143068 or 7,463,997) or Kato et al (2008/0243432) disclose a computer implemented machine/process that while under the control of a suitable operating program/system stored within or on a computer readable/accessible media/medium provides the

useful and beneficial function of monitoring and counting human activity. To monitor human activity, a suitable sensor is used in order to sense and monitor the one or more accelerations that are produced by the one or more motions of human activity. The acceleration signals that are produced by the sensor are then suitably processed by being analyzed or evaluated in order to detect a suitable variation of the amplitude/magnitude or pattern or signature of the sensor signal from the sensor that represents a human motion such as a step. Once a step has been detected, a step count is incremented in order to count the number of time that a human activity has been detected. Whereas further taught or suggest by at least:

(a) Smith et al (5,485,402) the count represents the number of human actions that have occurred within a measured time interval;

(b) either Richardson et al (5,976,083 or 6,135,951) or Ebeling et al (6,145,389) the count representing the number of human action is used in order to determine a distance that has been traveled by the human;

(c) either Sakuria et al (6,369,794) or Kubo et al (2002/0089425 or 6,700,499) or Ladetto et al (2003/0018430 or 6,826,477) or Park et al (2007/0067094 or 7,640,134) the variations in the sensor signal are variation over a period or interval or duration of time;

(d) either Kubo et al (2002/0089425 or 6,700,499) or Ladetto et al (2003/0018430 or 6,826,477) or Darley (6,611,789 or 2007/0061105 or 2007/0208531 or 7,428,471 or 7,617,071 or 2010/0057398 or 7,962,312) or Park et al (2007/0067094 or 7,640,134) or Pasolini et al (2007/0143068 or 7,463,997) the sensor signal is taken from an axis of the sensor;

(e) either Darley (6,611,789 or 2007/0061105 or 2007/0208531 or 7,428,471 or 7,617,071 or 2010/0057398 or 7,962,312) when a step has not detected within a predetermined period or interval or duration of time then a sleep mode is initialed until a qualifying acceleration has been detected and the monitor wakes up;

(f) either Tsuji (2005/0232388 or 2005/0238132 or JP 2005-309691 A or 7,169,084 or 7,297,088) any variation in the amplitude/magnitude or pattern or signature of the sensor signal from the sensor that is greater than on step cycle is counted as representing one or more human motions such as one or more steps; and

(g) either Seo et al (2006/0020177 or 7,334,472) the sampling frequency of the pedometer is changed when a step has not been detected within a predetermined period or

interval or duration of time since the last detected step and then a sleep mode is initialed until a qualifying acceleration is detected and the monitor wakes up.

B) the prior art does not fairly teach or suggest in regard to claims 1, 11 a process in claim 1, a machine in claim 11, and a tangible non-transitory article/manufacture in claim 17 that provides the useful and beneficial function of monitoring the activity of an user by providing actions in claim 1 and structures in claims 11 & 17 that perform at least the functions of:

(1) assigning a dominant axis with respect to gravity for an inertial sensor based upon the orientation of the inertial sensor;

(2) detecting a change in the orientation of the inertial sensor and updating the assigned dominant axis for the inertial sensor based upon the detected change in the orientation of the inertial sensor;

(3) counting period motions by monitoring accelerations relative to the dominant axis of the inertial sensor that occur within the cadence window by counting the periodic human motions when the monitored accelerations indicate a motion cycle that meets motion criteria within a cadence window"; and

(4) updating the cadence window as the actual cadence changes.

Claim 2, which depends from claim 1, claims 12-14, which depend from claim 11, and claims 16-20, which depend from claim 15, are allowable over the prior art for the same reason.

C) the prior art does not fairly teach or suggest in regard to claim 6 a process in claim 6 that provides the useful and beneficial function of monitoring the activity of an user by providing actions in claim 6 that perform at least the functions of:

(1) buffering a plurality of motion cycles representing periodic human motions;

(2) identifying within an appropriate cadence window, a number of periodic human motions;

(3) monitoring a human activity by counting each of the identified periodic human motions; and

(4) updating the cadence window as a cadence of the motion cycle changes.

Claims 7-10, which depend from claim 6, are allowable over the prior art for the same reason.

11. RELEVANT ART OF INTEREST

11.1 The Examiner has cited prior art of interest, for example:

A) either Kahn et al (7,457,719) or Kahn et al (2009/0043531 or 2009/0234614 or 2009/0319221 or 7,647,196 or 7,653,508 or 2010/0056872 or 7,753,861 or 7,788,059 or 7,881,902 or 7,987,070 or 8,187,182: a latter effective date) are publications of related applications with at least one common inventor.

12. CONCLUSION

12.1 Any inquiry concerning this communication or earlier communications from the Examiner should be directed to Edward R. Cosimano whose telephone number is 571-272-0571. The Examiner can normally be reached on 571-272-0571 from 8:30am to 5:00pm.

12.2 If attempts to reach the Examiner by telephone are unsuccessful, the Examiner's supervisor, Andrew Schechter, can be reached on 571-272-2302. The fax phone number for the organization where this application or proceeding is assigned is 571-273-8300.

12.3 Information regarding the status of an application may be obtained from the Patent Application Information Retrieval (PAIR) system. Status information for published applications may be obtained from either Private PAIR or Public PAIR. Status information for unpublished applications is available through Private PAIR only. For more information about the PAIR system, see http://portal.uspto.gov/external/portal. Should you have questions on access to the Private PAIR system, contact the Electronic Business Center (EBC) at 866-217-9197 (toll-free).

ERC
02/14/2013

/Edward Cosimano/
Primary Examiner Unit 2857

Substitute for Form 1449/PTO				Complete if Known	
INFORMATION DISCLOSURE STATEMENT BY APPLICANT				Application Number	13/018,321
(use as many sheets as necessary)				Filing Date	January 31, 2011
				First Named Inventor:	Philippe Kahn
				Art Unit	2857
				Examiner Name	Cosimano, Edward R
Sheet	1	**of**	1	Attorney Docket Number	8689P027C2

U.S. PATENT DOCUMENTS

Examiner Initials*	Cite No.[1]	Document Number Number-Kind Code[2] (If known)		Publication Date MM-DD-YYYY	Name of Patentee or Applicant of Cited Document	Pages, Columns, Lines, Where Relevant Passages or Relevant Figures Appear
/E.C./		US-	7,892,080	2/22/2011	Dahl, Fredrik Andreas	
/E.C./		US-	2005/0245988	11/3/2005	Miesel, Keith A.	
/E.C./		US-	2006/0149516	7/6/2006	Bond et al	
/E.C./		US-	2007/0145680	6/28/2007	Rosenberg, Louis B	
/E.C./		US-	2007/0259717	11/8/2007	Mattice et al	
/E.C./		US-	2009/0124348	5/14/2009	Yoseloff et al	
		US-				
		US-				
		US-				
		US-				
		US-				
		US-				
		US-				
		US-				
		US-				
		US-				
		US-				
		US-				
		US-				
		US-				
		US-				
		US-				
		US-				
		US-				
		US-				
		US-				
		US-				

Examiner Signature	/Edward Cosimano/	Date Considered	02/13/2013

*EXAMINER: Initial if reference considered, whether or not citation is in conformance with MPEP 609; Draw line through citation if not in conformance and not considered. Include copy of this form with next communication to applicant. [1]Applicant's unique citation designation number (optional). [2]See Kinds Codes of USPTO Patent Documents at www.uspto.gov or MPEP 901.04. [3]Enter Office that issued the document, by the two-letter code (WIPO Standard ST.3). [4]For Japanese patent documents, the indication of the year of reign of the Emperor must precede the serial number of the patent document. [5]Kind of document by the appropriate symbols as indicated on the document under WIPO Standard ST. 16 if possible. [6]Applicant is to place a check mark here if English language translation is attached.

This collection of information is required by 37 CFR 1.97 and 1.98. The information is required to obtain or retain a benefit by the public which is to file (and by the USPTO to process) an application. Confidentiality is governed by 35 U.S.C. 122 and 37 CFR 1.14. This collection is estimated to take 2 hours to complete including gathering, preparing, and submitting the completed application form to the USPTO. Time will vary depending upon the individual case. Any comments on the amount of time you require to complete this form and/or suggestions for reducing this burden, should be sent to the Chief Information Officer, U.S. Patent and Trademark Office, P.O. Box 1450, Alexandria, VA 22313-1450. DO NOT SENT FEES OR COMPLETED FORMS TO THIS ADDRESS. **SEND TO: Commissioner for Patents, P.O. Box 1450, Alexandria, Virginia 22313-1450.**

If you need assistance in completing the form, call 1-800-PTO-9199 (1-800-786-9199) and select option 2.

UNITED STATES PATENT AND TRADEMARK OFFICE

UNITED STATES DEPARTMENT OF COMMERCE
United States Patent and Trademark Office
Address: COMMISSIONER FOR PATENTS
P.O. Box 1450
Alexandria, Virginia 22313-1450
www.uspto.gov

BIB DATA SHEET

CONFIRMATION NO. 8340

SERIAL NUMBER	FILING or 371(c) DATE RULE	CLASS	GROUP ART UNIT	ATTORNEY DOCKET NO.
13/018,321	01/31/2011	702	2857	8689P027C2

APPLICANTS

Philippe Kahn, Aptos, CA;
Arthur Kinsolving, Santa Cruz, CA;
Mark Andrew Christensen, Santa Cruz, CA;
Brian Y. Lee, Aptos, CA;
David Vogel, Santa Cruz, CA;

**** CONTINUING DATA **************************

This application is a CON of 12/694,135 01/26/2010 PAT 7,881,902
which is a CON of 11/644,455 12/22/2006 PAT 7,653,508 OK /ERC/

**** FOREIGN APPLICATIONS ************************** NONE /ERC/

**** IF REQUIRED, FOREIGN FILING LICENSE GRANTED ****

03/02/2011

Foreign Priority claimed ☐ Yes ☑ No 35 USC 119(a-d) conditions met ☐ Yes ☑ No Verified and Acknowledged /EDWARD R COSIMANO/ Examiner's Signature	☐ Met after Allowance Initials	STATE OR COUNTRY	SHEETS DRAWINGS	TOTAL CLAIMS	INDEPENDENT CLAIMS
		CA	9	19 ~~30~~	4

ADDRESS

BLAKELY SOKOLOFF TAYLOR & ZAFMAN LLP
1279 OAKMEAD PARKWAY
SUNNYVALE, CA 94085-4040
UNITED STATES

TITLE

Human Activity Monitoring Device

FILING FEE RECEIVED	FEES: Authority has been given in Paper	☐ All Fees
1310	No._____ to charge/credit DEPOSIT ACCOUNT	☐ 1.16 Fees (Filing)
	No._____ for following:	☐ 1.17 Fees (Processing Ext. of time)
		☐ 1.18 Fees (Issue)
		☐ Other _____
		☐ Credit

BIB (Rev. 05/07).

	Type	L #	Hits	Search Text	DBs	Time Stamp
1	BRS	L1	604208	(dominant or principle or principal or major or critical or override or overridden or overriding or ((most or greatest or largest) near2 important) or sense or sensing or detect$1r or detection or gravity or gravitational) near5 (axis or axies or direction or vector or orientate or orientated or orientating or orientation or incline or inclined or inclining or inclination)	US-PGPUB; USPAT; USOCR; FPRS; EPO; JPO; DERWENT; IBM_TDB	2013/02/13 18:00
2	BRS	L2	76079	L1 near10 (inertial or ins or ims or gyro or gyroscope or acc or accel or accelerate or accelerated or accelerating or acceleration or mem or micro$1electr$4mechanical$1machine or micro$1electr$4machine or nem or nano$1electr$4mechanical$1machine or nano$1electr$4machine)	US-PGPUB; USPAT; USOCR; FPRS; EPO; JPO; DERWENT; IBM_TDB	2013/02/13 18:00

	Type	L #	Hits	Search Text	DBs	Time Stamp
3	BRS	L3	1935241	(drift or drifted or drifting or vary or variance or varied or varying or variation or deviate or deviated or deviating or deviation or offset or depart or departed or departing or change or changed or changing or chang$1r or alter or altered or altering or alteration or alter$1r or modify or modified or modifying or modification or modif$2r or delta or adjust or adjusted or adjusting or adjustment or adjust$1r or shift or shifted or shifting or shift$1r) near6 (axis or axies or direction of vector or orientate or orientated or orientating or orientation or incline or inclined or inclining or inclination)	US-PGPUB; USPAT; USOCR; FPRS; EPO; JPO; DERWENT; IBM_TDB	2013/02/13 18:00
4	BRS	L4	126950	L3 near6 (inertial or ins or ims or gyro or gyroscope or acc or accel or accelerate or accelerated or accelerating or acceleration or mem or micro$1electr$4mechanical$1machine or micro$1electr$4machine or nem or nano$1electr$4mechanical$1machine or nano$1electr$4machine)	US-PGPUB; USPAT; USOCR; FPRS; EPO; JPO; DERWENT; IBM_TDB	2013/02/13 18:00
5	BRS	L5	13644	L1 near5 (update or updated or updating or updat$1r or correct or corrected or correcting or correction or correct$1r or compensate or compensated or compensating or compensation or compensat$1r or calibrate or calibrated or calibrating or calibration or calibrat$1r)	US-PGPUB; USPAT; USOCR; FPRS; EPO; JPO; DERWENT; IBM_TDB	2013/02/13 18:00

	Type	L #	Hits	Search Text	DBs	Time Stamp
6	BRS	L6	267	L4 same L5	US-PGPUB; USPAT; USOCR; FPRS; EPO; JPO; DERWENT; IBM_TDB	2013/02/13 18:00
7	BRS	L7	1183985	(count or counted or counting or number or numbered or numbering or increment or incremented or incrementing or accumulate or accumulated or accumulating or accumulation) near5 (motion or move or moved or moving or movements or acc or accel or accelerate or accelerated or accelerating or acceleration or step or stepping or walk or walking or run or running or walk or walking or run or running or jog or jogging or act or acting or action or active or activity or gait or stride)	US-PGPUB; USPAT; USOCR; FPRS; EPO; JPO; DERWENT; IBM_TDB	2013/02/13 18:00
8	BRS	L8	1468	L1 near5 L7	US-PGPUB; USPAT; USOCR; FPRS; EPO; JPO; DERWENT; IBM_TDB	2013/02/13 18:00
9	BRS	L9	9	L2 and L6 and L8	US-PGPUB; USPAT; USOCR; FPRS; EPO; JPO; DERWENT; IBM_TDB	2013/02/13 18:00

	Type	L #	Hits	Search Text	DBs	Time Stamp
10	BRS	L10	1788097	(motion or move or moved or moving or movements or step or stepping or walk or walking or run or running or walk or walking or run or running or jog or jogging or act or acting or action or active or activity or gait or stride) near4 (number or numbered or numbering or count or counted or counting or accumulate or accumulated or accumulating or accumulation or at$1least or ((more or greater or larger or bigger) adj2 than) or plural or plurality or multiple or multi)	US-PGPUB; USPAT; USOCR; FPRS; EPO; JPO; DERWENT; IBM_TDB	2013/02/13 18:00

	Type	L #	Hits	Search Text	DBs	Time Stamp
11	BRS	L11	457276	L10 near6 (measure or measured or measuring or measurement or monitor or monitored or monitoring or capture or captured or capturing or detect or detected or detecting or detection or detect$1r or sense or sensed or sensing or sens$1r or transduce or transduced or transducing or transducer or sample or sampled or sampling or sampl$1r or determine or determined or determining or determination or determin$1r or scan or scanned or scanning or scann$1r or met$1r or metered or metering or gauge or gauged or gauging or gaug$1r or gage or gaged or gaging or gag$1r or acquire or acquired or acquiring or acquisition or acquisitioning or acquir$1r or collect or collected or collecting or collection or collect$1r or log or logged or logging or logg$1r or record or recorded or recording or record$1r or accumulate or accumulated or accumulating or accumulation or accumulat$1r or register or registered or registering or registration or buffer or buffered or buffering or store or stored or storing or storage or memorize or memorized or memorizing or memorization or memory)	US-PGPUB; USPAT; USOCR; FPRS; EPO; JPO; DERWENT; IBM_TDB	2013/02/13 18:00

	Type	L #	Hits	Search Text	DBs	Time Stamp
12	BRS	L12	108336	L10 near5 (judge or judged or judging or judgment or judgement or judg$1r or evaluate or evaluated or evaluating or evaluation or evaluat$1r or analysis or analyze or analyzed or analyzing or analyz$1r or allocate or allocated or allocating or allocation or allocat$1r or assign or assigned or assigning or assignment or assign$1r or id or identify or identifying or identified or identification or recogni$1e or recogni$1ed or recogni$1ing or recognition)	US-PGPUB; USPAT; USOCR; FPRS; EPO; JPO; DERWENT; IBM_TDB	2013/02/13 18:00
13	BRS	L13	1250835	(cadence or repeat or repeated or repeating or repetition or periodic or cycle or cyclic or cyclical or gait or stride) near3 (criteria or criterion or criterium or threshold or limit or require or required or requiring or requirement or tolerance or window or range or band or qualify or qualified or qualifying or qualification or within or with$1in or standard or bench or bench$1mark or bench$1marked or bench$1marking or baseline or base or reference or period or time or timing or interval)	US-PGPUB; USPAT; USOCR; FPRS; EPO; JPO; DERWENT; IBM_TDB	2013/02/13 18:00
14	BRS	L14	588	L12 near15 L13	US-PGPUB; USPAT; USOCR; FPRS; EPO; JPO; DERWENT; IBM_TDB	2013/02/13 18:00

	Type	L #	Hits	Search Text	DBs	Time Stamp
15	BRS	L15	977858	(motion or move or moved or moving or movements or step or stepping or walk or walking or run or running or walk or walking or run or running or jog or jogging or act or acting or action or active or activity or gait or stride) near4 (number or numbered or numbering or count or counted or counting or accumulate or accumulated or accumulating or accumulation)	US-PGPUB; USPAT; USOCR; FPRS; EPO; JPO; DERWENT; IBM_TDB	2013/02/13 18:00
16	BRS	L16	3253878	(motion or move or moved or moving or movements or step or stepping or walk or walking or run or running or walk or walking or run or running or jog or jogging or act or acting or action or active or activity or gait or stride) near4 (measure or measured or measuring or measurement or monitor or monitored or monitoring or capture or captured or capturing or detect or detected or detecting or detection or detect$1r or sense or sensed or sensing or sens$1r or transduce or transduced or transducing or transducer or sample or sampled or sampling or sampl$1r or determine or determined or determining or determination or determin$1r or scan or scanned or scanning or scann$1r or met$1r or metered or metering or gauge or gauged or gauging or gaug$1r or gage or gaged or gaging or gag$1r or acquire or acquired or acquiring or acquisition or acquisitioning or acquir$1r or collect or collected or collecting or collection or collect$1r or log or logged or logging or logg$1r or accumulate or accumulated or accumulating or accumulation or accumulat$1r)	US-PGPUB; USPAT; USOCR; FPRS; EPO; JPO; DERWENT; IBM_TDB	2013/02/13 18:00

	Type	L #	Hits	Search Text	DBs	Time Stamp
17	BRS	L17	134057	L15 near15 L16	US-PGPUB; USPAT; USOCR; FPRS; EPO; JPO; DERWENT; IBM_TDB	2013/02/13 18:00
18	BRS	L18	176	L11 and L14 and L17	US-PGPUB; USPAT; USOCR; FPRS; EPO; JPO; DERWENT; IBM_TDB	2013/02/13 18:00
19	BRS	L19	1536	L1 near15 L15	US-PGPUB; USPAT; USOCR; FPRS; EPO; JPO; DERWENT; IBM_TDB	2013/02/13 18:00
20	BRS	L20	5	L9 and L19	US-PGPUB; USPAT; USOCR; FPRS; EPO; JPO; DERWENT; IBM_TDB	2013/02/13 18:00
21	BRS	L21	32131	(kahn$1 adj2 (p or philippe)).in. or ((kinsolving$1 or kingsolving$1) adj2 (a or arthur)).in. or (christensen$1 adj2 (m or mark)).in. or (lee$1 adj2 (b or brian or brain)).in. or (vogel$1 adj2 (d or david)).in.	US-PGPUB; USPAT; USOCR; FPRS; EPO; JPO; DERWENT; IBM_TDB	2013/02/13 18:00
22	BRS	L22	84	(fullpower or full$1power or (dp adj2 (technology or technologies))).as.	US-PGPUB; USPAT; USOCR; FPRS; EPO; JPO; DERWENT; IBM_TDB	2013/02/13 18:00

	Type	L #	Hits	Search Text	DBs	Time Stamp
23	BRS	L23	36	"13"$1"018"$1"321" or "12"$1"694"$1"135" or "7"$1"881"$1"902" or "11"$1"644"$1"455" or "7"$1"653"$1"508" or "60"$1"900"$1"412" or "60"$1"926"$1"027" or "11"$1"891"$1"112" or "2009"$1"0"$1"043"$1"531" or "7"$1"647"$1"196" or "12"$1"069"$1"267" or "12"$1"108"$1"486" or "2009"$1"0"$1"234"$1"614" or "7"$1"987"$1"070" or "12"$1"834"$1"845" or ("20090043531" or "20090234614" or "7647196" or "7653508" or "7881902" or "7987070").pn.	US-PGPUB; USPAT; USOCR; FPRS; EPO; JPO; DERWENT; IBM_TDB	2013/02/13 18:00
24	BRS	L24	22975	(33/700 or 33/701 or 73/1.01 or 73/1.37 or 73/1.38 or 73/1.75 or 73/1.76 or 73/1.77 or 73/1.78 or 73/1.79 or 73/1.81 or 73/432.1 or 73/865.4 or 73/865.8 or 377/1 or 377/13 or 377/15 or 377/17 or 377/19 or 377/20 or 377/24 or 377/24.1 or 377/24.2 or 702/1 or 702/85 or 702/97 or 702/104 or 702/127 or 702/141 or 702/150 or 702/155 or 702/158 or 702/160 or 702/187 or 702/189 or 708/100 or 708/101 or 708/105 or 708/131 or 708/160 or 708/200 or 708/212).ccls.	US-PGPUB; USPAT; USOCR; FPRS; EPO; JPO; DERWENT; IBM_TDB	2013/02/13 18:00

	Type	L #	Hits	Search Text	DBs	Time Stamp
25	BRS	L25	399369	(g01b$1"5"$1"00" or g01b$1"5"$1"02" or g01c$1"22"$1"00" or g01c$1"25"$1"00" or g01p$1"13"$1"00" or g01d$1"7"$1"00" or g06f$1"11"$1"00" or g06f$1"11"$1"30" or g06f$1"11"$1"32" or g06f$1"17"$1"00" or g06f$1"17"$1"40" or g06f$1"19"$1"00")	US-PGPUB; USPAT; USOCR; FPRS; EPO; JPO; DERWENT; IBM_TDB	2013/02/13 18:00
26	BRS	L26	2025	"4285041" or "4578769" or "5446725" or "5446775" or "5583776" or "5485402" or "5593431" or "5654619" or "5778882" or "5955667" or "5976083" or "6013007" or "6122595" or "6135951" or "6145389" or "6282496" or "20020023654" or "6353449" or "6369794" or "20020040601" or "20020089425" or "6428490" or "20020109600" or "20020116147" or "20020118121" or "20020151810" or "6493652" or "6496695" or "20030018430" or "20030023192" or "6513381" or "6522266" or "6532419" or "20030048218" or "6539336" or "20030083596" or "20030093248" or "20030109258" or "20030139692" or "6611789" or "20030208335" or "20030191582" or "6644322" or "6700499" or "20040064286" or "20040077954" or "6744403" or "20040107072" or "6771250"	US-PGPUB; USPAT; USOCR; FPRS; EPO; JPO; DERWENT; IBM_TDB	2013/02/13 18:00

	Type	L #	Hits	Search Text	DBs	Time Stamp
27	BRS	L27	809	"6786877" or "6790178" or "20040186695" or "6813582" or "20040225467" or "20040230138" or "6820002" or "6823036" or "20040236500" or "6826477" or "20040260191" or "6836744" or "20050021270" or "20050021292" or "20050033200" or "20050038626" or "6881191" or "6885971" or "6895341" or "6898550" or "20050132797" or "6928382" or "6941239" or "20050202934" or "20050210300" or "20050222801" or "20050232388" or "20050232404" or "6959259" or "20050238132" or "20050240375" or "20050245988" or "20050248718" or "6975959" or "6983219" or "20060017561" or "20060020177" or "20060020421" or "7010332" or "20060063980" or "20060064276" or "20060100546" or "20060104018" or "7054784" or "7057551"	US-PGPUB; USPAT; USOCR; FPRS; EPO; JPO; DERWENT; IBM_TDB	2013/02/13 18:00

	Type	L #	Hits	Search Text	DBs	Time Stamp
28	BRS	L28	498	"20060136173" or "20060143645" or "7070571" or "7072789" or "20060149516" or "20060161377" or "20060167387" or "20060174685" or "7092846" or "20060206258" or "20060223547" or "20060235642" or "20060259268" or "7145461" or "7148797" or "20060284979" or "20060288781" or "7158912" or "7169084" or "7171331" or "20070032951" or "7177684" or "20070038364" or "20070061105" or "20070063850" or "20070067094" or "20070073482" or "7200517" or "20070082789" or "7212943" or "7216053" or "7220220" or "20070123806" or "20070125852" or "20070130582" or "20070142715" or "20070143068" or "20070145680" or "20070150136" or "7254516" or "7255437" or "7263461" or "20070208530" or "20070208531"	US-PGPUB; USPAT; USOCR; FPRS; EPO; JPO; DERWENT; IBM_TDB	2013/02/13 18:00

	Type	L #	Hits	Search Text	DBs	Time Stamp
29	BRS	L29	295	"20070208544" or "20070213126" or "20070233424" or "20070250261" or "20070259716" or "20070259717" or "20070260418" or "20070260482" or "7297088" or "20070276295" or "7305323" or "7313440" or "7328611" or "7334472" or "7353112" or "7382611" or "7387611" or "20080171918" or "7421369" or "7428471" or "20080243432" or "7451056" or "7457719" or "7463997" or "7467060" or "20090015421" or "20090018773" or "20090047645" or "7512515" or "20090144020" or "7526402" or "20090124348" or "7561960" or "20090213002" or "7586032" or "7596466" or "7608050" or "7617071" or "7627423" or "20090319221" or "7640134" or "7640804" or "7648441" or "7672781" or "20100056872" or "20100057398" or "7679601" or "7684958"	US-PGPUB; USPAT; USOCR; FPRS; EPO; JPO; DERWENT; IBM_TDB	2013/02/13 18:00
30	BRS	L30	73	"20100121605" or "7725139" or "7747409" or "7752011" or "7753861" or "7774156" or "7788059" or "7788071" or "7857772" or "7883445" or "7892080" or "7962312" or "7966148" or "20110184693" or "8152693" or "8179321" or "8187182" or "8229700"	US-PGPUB; USPAT; USOCR; FPRS; EPO; JPO; DERWENT; IBM_TDB	2013/02/13 18:00

	Type	L #	Hits	Search Text	DBs	Time Stamp
31	BRS	L31	8	$2"05"$1"309691"	US-PGPUB; USPAT; USOCR; FPRS; EPO; JPO; DERWENT; IBM_TDB	2013/02/13 18:00
32	BRS	L32	69	L2 and L5 and L7 and L15 and (L6 or L8 or L11 or L14 or L17 or L19) and (L21 or L22 or L23 or L24 or L25 or L26 or L27 or L28 or L29 or L30 or L31)	US-PGPUB; USPAT; USOCR; FPRS; EPO; JPO; DERWENT; IBM_TDB	2013/02/13 18:00
33	BRS	L33	54	(L2 or L5 or L6 or L7 or L8 or L11 or L14 or L15 or L17 or L19) and ("5485402" or "5976083" or "6135951" or "6145389" or "6369794" or "20020089425" or "20030018430" or "6611789" or "6700499" or "6826477" or "20050232388" or "20050238132" or "2005309691" or "20060020177" or "20060174685" or "7169084" or "20070061105" or "20070067094" or "20070143068" or "20070208531" or "7297088" or "7305323" or "7334472" or "7428471" or "20080243432" or "7457719" or "7463997" or "20090043531" or "20090234614" or "7617071" or "20090319221" or "7640134" or "7647196" or "7653508" or "20100057398" or "20100056872" or "7753861" or "7788059" or "7881902" or "7962312" or "7987070").pn.	US-PGPUB; USPAT; USOCR; FPRS; EPO; JPO; DERWENT; IBM_TDB	2013/02/13 18:00

	Type	L #	Hits	Search Text	DBs	Time Stamp
34	BRS	L34	283	L9 or L18 or L20 or L32 or L33	US-PGPUB; USPAT; USOCR; FPRS; EPO; JPO; DERWENT; IBM_TDB	2013/02/13 18:00
35	BRS	L35	1956	((L24 or L25) and (@pd>="19470101" and @pd<="19710101")) or ("2005309691").pn.	US-PGPUB; USPAT; USOCR; FPRS; EPO; JPO; DERWENT; IBM_TDB	2013/02/13 18:12

Reviewed L34 Ti, Ab, Kwic All

Reviewed L35 Ti All

/ERC/
13 February 2013

	Document ID	Publication Date	Inventor	Current OR	Current XRef	Pages
1	US 5485402 A	19960116	Smith; Douglas G. et al.	702/160	340/870.01; 340/870.28	10
2	US 5976083 A	19991102	Richardson; J. Jeffrey et al.	600/300	482/8; 482/901; 600/481; 600/587	34
3	US 6135951 A	20001024	Richardson; J. Jeffrey et al.	600/300	482/8; 600/592; 600/595	32
4	US 6145389 A	20001114	Ebeling; W. H. Carl et al.	73/865.4		14
5	US 6369794 B1	20020409	Sakurai; Yasuhiro et al.	345/156	379/433.04	37
6	US 20020089425 A1	20020711	Kubo, Nobuo et al.	340/573.1	340/669	28
7	US 20030018430 A1	20030123	Ladetto, Quentin et al.	701/217	701/200	56
8	US 6611789 B1	20030826	Darley; Jesse	702/160	702/141; 702/142; 702/176	87
9	US 6700499 B2	20040302	Kubo; Nobuo et al.	340/686.1	340/573.1; 340/573.7; 482/3; 482/74; 600/510; 600/552; 600/553; 73/379.01; 73/379.09	27
10	US 6826477 B2	20041130	Ladetto; Quentin et al.	701/217	340/944; 701/200; 701/213; 73/178R	58
11	US 20050232388 A1	20051020	Tsuji, Tomoharu	377/24.2		10
12	US 20050238132 A1	20051027	Tsuji, Tomoharu	377/24.2		10
13	JP 2005309691 A	20051104	TSUJI, TOMOHARU			9

Reviewed L34

/ERC/ 13 February 2013

	Document ID	Publication Date	Inventor	Current OR	Current XRef	Pages
14	US 20060020177 A1	20060126	Seo; Jeong-Wook et al.	600/300	482/8; 600/595	90
15	US 20060174685 A1	20060810	Skvortsov; Vladimir et al.	73/1.37		8
16	US 7169084 B2	20070130	Tsuji; Tomoharu	482/8	482/1; 482/9; 702/160	9
17	US 20070061105 A1	20070315	Darley; Jesse et al.	702/182		86
18	US 20070067094 A1	20070322	Park; Kyong-Ha et al.	701/200	702/141	13
19	US 20070143068 A1	20070621	Pasolini; Fabio et al.	702/160		11
20	US 20070208531 A1	20070906	Darley; Jesse et al.	702/142	702/158; 702/178	86
21	US 7297088 B2	20071120	Tsuji; Tomoharu	482/3	377/24.2; 482/8; 482/900; 702/160	10
22	US 7305323 B2	20071204	Skvortsov; Vladimir et al.	702/160	377/24.2; 702/141	8
23	US 7334472 B2	20080226	Seo; Jeong-Wook et al.	73/379.01		89
24	US 7428471 B2	20080923	Darley; Jesse et al.	702/182	36/132; 36/136; 377/23; 377/24.2; 702/141; 702/142; 702/144; 702/160; 702/176; 73/597	83
25	US 20080243432 A1	20081002	Kato; Kazuo et al.	702/160		7
26	US 7457719 B1	20081125	Kahn; Philippe et al.	702/141		16
27	US 7463997 B2	20081209	Pasolini; Fabio et al.	702/160		12
28	US 20090043531 A1	20090212	Kahn; Philippe et al.	702/149		22

Reviewed L34

/ERC/ 13 February 2013

	Document ID	Publication Date	Inventor	Current OR	Current XRef	Pages
29	US 20090234614 A1	20090917	Kahn; Philippe et al.	702/141	351/158	18
30	US 7617071 B2	20091110	Darley; Jesse et al.	702/165	702/142; 702/158; 702/160; 702/176; 73/597	82
31	US 20090319221 A1	20091224	Kahn; Philippe et al.	702/141		31
32	US 7640134 B2	20091229	Park; Kyong-Ha et al.	702/141	600/587; 600/592; 600/595; 73/491; 73/865.4	13
33	US 7647196 B2	20100112	Kahn; Philippe et al.	702/149	702/142; 702/150; 702/154	22
34	US 7653508 B1	20100126	Kahn; Philippe et al.	702/160	33/700; 377/1; 377/13; 377/24.2; 377/25; 702/1; 702/127; 702/155; 702/158; 702/187; 702/189	19
35	US 20100057398 A1	20100304	Darley; Jesse et al.	702/160	702/142	85
36	US 20100056872 A1	20100304	Kahn; Philippe et al.	600/300		22
37	US 7753861 B1	20100713	Kahn; Philippe et al.	600/595	482/8; 482/9; 600/300; 600/301; 600/587	24

Reviewed L34

/ERC/ 13 February 2013

	Document ID	Publication Date	Inventor	Current OR	Current XRef	Pages
38	US 7788059 B1	20100831	Kahn; Philippe et al.	702/141		17
39	US 7881902 B1	20110201	Kahn; Philippe et al.	702/160	377/24.2; 702/97	19
40	US 7962312 B2	20110614	Darley; Jesse et al.	702/165	702/142; 702/158; 702/160; 702/176; 73/597	84
41	US 7987070 B2	20110726	Kahn; Philippe et al.	702/160	351/41; 73/1.38	19

Reviewed L34

/ERC/
13 February 2013

	Document ID	Publication Date	Inventor	Current OR	Current XRef	Pages
1	JP 2005309691 A	20051104	TSUJI, TOMOHARU			9

Reviewed L35

/ERC/
13 February 2013

Search Notes	Application/Control No.	Applicant(s)/Patent Under Reexamination
	13018321	KAHN ET AL.
	Examiner	Art Unit
	EDWARD COSIMANO	2857

CPC- SEARCHED		
Symbol	Date	Examiner

CPC COMBINATION SETS - SEARCHED		
Symbol	Date	Examiner

US CLASSIFICATION SEARCHED			
Class	Subclass	Date	Examiner
33	700, 701	11/03/2011	ERC
73	1.01, 1.37, 1.38, 1.75, 1.76, 1.77, 1.78, 1.79, 1.81, 432.1, 865.4, 865.8	11/03/2011	ERC
377	1, 13, 15, 17, 19, 20, 24, 24.1, 24.2	11/03/2011	ERC
702	1, 85, 97, 104, 127, 141, 150, 155, 158, 160, 187, 189	11/03/2011	ERC
708	100, 101, 105, 131, 160, 200, 212	11/03/2011	ERC
Updated	above	01/21/2012	ERC
Updated	above	05/19/2012	ERC
Updated	above	02/13/2013	ERC
G01B	5/00, 5/02	02/13/2013	ERC
G01C	22/00, 25/00	02/13/2013	ERC
G01D	7/00	02/13/2013	ERC
G01P	13/00	02/13/2013	ERC
G06F	11/00, 11/30, 11/32, 17/00, 17/40, 19/00	02/13/2013	ERC

SEARCH NOTES		
Search Notes	Date	Examiner
Inventor Name Search; Continuity Check	10/28/2011	ERC
EAST (USOCR, USPAT, US-PGPUB, DERWENT, EPO, FPRS, JPO, IBM-TDB)	11/03/2011	ERC
Updated EAST search of 03 November 2011 with additional terms	01/21/2012	ERC
EAST (USOCR, USPAT, US-PGPUB, DERWENT, EPO, FPRS, JPO, IBM-TDB)	05/19/2012	ERC
Inventor Name and Assignee Check	02/12/2013	ERC

SEARCH NOTES		
Search Notes	**Date**	**Examiner**
Inventor Name and Assignee Search	02/13/2013	ERC
EAST (USOCR, USPAT, US-PGPUB, DERWENT, EPO, FPRS, JPO, IBM-TDB)	02/13/2013	ERC

INTERFERENCE SEARCH			
US Class/ CPC Symbol	**US Subclass / CPC Group**	**Date**	**Examiner**

Index of Claims	Application/Control No.	Applicant(s)/Patent Under Reexamination
	13018321	KAHN ET AL.
	Examiner	**Art Unit**
	EDWARD COSIMANO	2857

✓	Rejected	-	Cancelled	N	Non-Elected	A	Appeal
=	Allowed	÷	Restricted	I	Interference	O	Objected

☐ Claims renumbered in the same order as presented by applicant ☐ CPA ☐ T.D. ☐ R.1.47

CLAIM		DATE								
Final	Original	11/04/2011	01/21/2012	05/20/2012	02/14/2013					
	1	=	=	✓	✓					
	2	=	=	✓	✓					
	3	=	=	✓	-					
	4	=	=	✓	✓					
	5	=	=	✓	✓					
	6	=	=	✓	✓					
	7	=	=	✓	✓					
	8	=	=	✓	✓					
	9	=	=	✓	✓					
	10	=	=	✓	✓					
	11	=	=	✓	✓					
	12	=	=	✓	✓					
	13	=	=	✓	✓					
	14	=	=	✓	✓					
	15	=	=	✓	✓					
	16	=	=	✓	✓					
	17	=	=	✓	✓					
	18	=	=	✓	✓					
	19	=	=	✓	✓					
	20	=	=	✓	✓					

IN THE UNITED STATES PATENT AND TRADEMARK OFFICE

Applicant	:	Philippe Kahn, et al.	Examiner:	Cosimano, Edward R
Appl. No.	:	13/018,321	Art Unit:	2857
Filed	:	January 31, 2011	Conf No:	8340
For	:	Human Activity Monitoring Device		
Customer No.	:	08791		

CERTIFICATE OF TRANSMISSION
I hereby certify that this correspondence is being submitted electronically via EFS Web on the date shown below.

/Judith Szepesi/ January 28, 2013
Judith A. Szepesi ***Date***

Mail Stop Amendment
Commissioner for Patents
P.O. Box 1450
Alexandria, Virginia 22313-1450

AMENDMENT

Sir:

In response to the Office Action of September 26, 2012, applicants respectfully request the Examiner to enter the following amendments and consider the following remarks:

Amendments to the Claims begin on page 2 of this paper.
Remarks/Arguments begin on page 6 of this paper.

Amendments to the Claims:

The listing of claims will replace all prior versions, and listings, of claims in the application:

Listing of Claims:

1. (Currently Amended) A method of monitoring human activity using an inertial sensor, comprising:

assigning a dominant axis with respect to gravity based on an orientation of the inertial sensor;

detecting a change in the orientation of the inertial sensor and updating the dominant axis based on the change; and

counting periodic human motions by monitoring accelerations relative to the dominant axis by counting the periodic human motions when accelerations showing a motion cycle that meets motion criteria is detected within a cadence window; and

updating the cadence window as actual cadence changes.

2. (Original) The method of claim 1, further comprising:

using acceleration measurements along only the dominant axis to count steps.

3. Canceled

4. (Original) The method of claim 3, wherein at least one of the motion criteria is a dynamic motion criterion, the dynamic motion criterion updated to reflect current conditions.

5. (Original) The method of claim 4, wherein the dynamic motion criteria includes at least a lower threshold, wherein the lower threshold is adjusted based on at least one of a rolling average of accelerations and the orientation of the inertial sensor.

6. (Currently Amended) A method of monitoring human activity using an inertial sensor, comprising:

buffering a plurality of periodic human motions, each periodic human motion comprising a motion cycle;

identifying a number of periodic human motions within an appropriate cadence window[[s]]; ~~and~~

counting each of the periodic human motions to enable the monitoring of human activity; and

updating the cadence window as a cadence of the motion cycle changes.

7. (Original) The method of claim 6, wherein prior to identifying, the inertial sensor is in a non-active mode, and wherein the non-active mode comprises running the device in one of an exit mode and an entry mode.

8. (Original) The method of claim 7, wherein:

a requirement for switching the device from the exit mode to an active mode is lower than a requirement for switching the device from the entry mode to the active mode.

9. (Original) The method of claim 6, further comprising:

switching the device from the active mode to the non-active mode when a number of expected periodic human motions are not identified in the appropriate cadence windows.

10. (Original) The method of claim 6, further comprising:

switching from a sleep mode to the non-active mode of operation when an acceleration is detected.

11. (Currently Amended) An inertial sensor based device, comprising:

a dominant axis logic to determine an orientation of a device with respect to gravity, to assign a dominant axis, and to update the dominant axis when the orientation of the device changes; and

a counting logic to count periodic human motions by monitoring accelerations relative to the dominant axis by counting the periodic human motions when

accelerations showing a motion cycle that meets motion criteria is detected within a cadence window; and

a cadence logic to update the cadence window as actual cadence changes.

.

12. (Original) The device of claim 11, wherein:

the counting logic uses acceleration measurements along only the dominant axis to count steps.

13. (Currently Amended) The device of claim 11, further comprising:

[[a]] the cadence logic to update a dynamic cadence window; and

the counting logic to count a periodic human motion when an acceleration measurement that meets motion criteria is taken within the cadence window.

14. (Original) The device of claim 11, further comprising:

a comparator, to compare measurements of acceleration to dynamic motion criteria, the dynamic motion criteria updated to reflect current conditions; and

the counting logic to count a periodic human motion when the measurements of acceleration satisfy the dynamic motion criteria.

15. (Currently Amended) A non-transitory machine readable medium containing executable computer program instructions which, when executed by a processing system, cause said system to perform a method for:

assigning a dominant axis with respect to gravity based on an orientation of the inertial sensor;

detecting a change in the orientation of the inertial sensor and update the dominant axis based on the change; and

counting periodic human motions by monitoring accelerations relative to the dominant axis by counting the periodic human motions when accelerations showing a motion cycle that meets motion criteria is detected within a cadence window; and

updating the cadence window as actual cadence changes.

16. (Original) The non-transitory machine readable medium containing executable computer program instructions of claim 15, which, when executed by the processing system, cause said system to perform the method further for:

using acceleration measurements along only the dominant axis to count steps.

17. (Original) The non-transitory machine readable medium containing executable computer program instructions of claim 15, which, when executed by the processing system, cause said system to perform the method further for:

maintaining a cadence window, wherein the cadence window is updated as an actual cadence changes; and

counting a periodic human motion when an acceleration measurement that meets motion criteria is within the cadence window.

18. (Original) The non-transitory machine readable medium containing executable computer program instructions of claim 17, wherein at least one of the motion criteria is a dynamic motion criterion, the dynamic motion criterion updated to reflect current conditions.

19. (Original) The non-transitory machine readable medium containing executable computer program instructions of claim 18, wherein the dynamic motion criteria includes at least a lower threshold, wherein the lower threshold is adjusted based on at least one of a rolling average of accelerations and the orientation of the inertial sensor.

20. (Original) The non-transitory machine readable medium containing executable computer program instructions of claim 15, which, when executed by the processing system, cause said system to perform the method further for:

switching the device from an active mode to a non-active mode when a number of expected periodic human motions are not identified in the appropriate cadence windows.

Remarks/Arguments

Applicants respectfully request consideration of the subject application as amended herein. This Amendment is submitted in response to the Office Action mailed September 26, 2012. Claims 1-20 are rejected.

In this Amendment, claims 1, 6, 11, 13, and 15 have been amended. Claim 3 has been canceled without prejudice. It is respectfully submitted that the amendment does not add new matter.

Applicants reserve all rights with respect to the applicability of the Doctrine of Equivalents.

Double Patenting Rejection

Claims 1-5 and 11-20 are provisionally rejected under the judicially created doctrine of obviousness-type double patenting as being unpatentable over claims 1-5 and 11-14 of U.S. Patent No. 7,653,508 issued January 26, 2010.

Claims 6-10 are provisionally rejected under the judicially created doctrine of obviousness-type double patenting as being unpatentable over claims 6-10 and 15-20 of U.S. Patent No. 7,653,508 issued January 26, 2010.

Applicants respectfully request abeyance of this rejection until claims are allowed. Once claims are allowed, and if appropriate based on the content of those claims, Applicants will submit a terminal disclaimer in this case.

Claim Rejections under 35 U.S.C. §102

Claims 1-2, 11-12, and 14-16 stand rejected under 35 U.S.C. §102(e) as being anticipated by U.S. Publication No. 2007/0143068 to Pasolini, et al (hereinafter "Pasolini").

Pasolini discusses a method to detect steps using an accelerometer. Pasolini's system is designed to count steps, based on comparison of an acceleration signal to a threshold. However, Pasolini does not teach or suggest the use of cadence windows, much less the comparison of a motion cycle to a cadence window which is adjusted as the user's motion is detected. Therefore, Applicants respectfully submit that claims 1, 11, and 15, as amended, and the claims that depend on them, are not anticipated by Pasolini.

Claims 6-10 stand rejected under 35 U.S.C. §102(b) as being anticipated by U.S. Patent No. 6,611,789 to Darley (hereinafter "Darley").

Darley discusses a pedometer system in which the system measures toe offs and heel strikes, as well as time on the ground, and utilizes the relationship between these measurements to calculate a user's steps. However, Darley's system teaches away from using an entire motion cycle for calculations. Because Darley depends on a significant number of specific measurements, and their relative relationships to count steps, Darley does not teach or suggest calculating a cadence window of a motion cycle, as recited in claim 6, as amended. A motion cycle, as defined in the Specification as originally filed, is a repeated set of motions that can be considered a complete unit. Figure 2 of the Specification shows such a motion cycle.

Claim 6, as amended recites in part "buffering a plurality of periodic human motions, each periodic human motion comprising a motion cycle; identifying a number of periodic human motions within an appropriate cadence window; counting each of the periodic human motions to enable the monitoring of human activity; and updating the cadence window as a cadence of the motion cycle changes. There is no suggestion in Darley, as far as Applicant's review of the 100 pages could determine, of utilizing an entire motion cycle, and an associated cadence window, for buffering, and for identifying periodic human motions, such as steps. Therefore, Applicants respectfully submit that claim 6, as amended, and the claims that depend on it, are not anticipated by Darley.

Claim Rejections under 35 U.S.C. §103(a)

Claim 20 stand rejected under 35 U.S.C. §103(a) as being unpatentable over Pasolini as applied to claim 15 and further in view of Darley as applied above to claims 6-10.

Claim 20 depends on claim 15, and incorporates its limitations. Claim 15, as amended, recites in part "counting periodic human motions by monitoring accelerations relative to the dominant axis by counting the periodic human motions when accelerations showing a motion cycle that meets motion criteria is detected within a cadence window; and updating the cadence window as actual cadence changes."

As noted above, Pasolini does not teach or suggest measuring cadences, much less using a cadence window to determine whether motion cycles qualify as periodic human motion.

While Darley does mention using time frames to determine whether motions qualify to be counted, Darley utilizes the relationship between subparts of motions, rather than the cadence of the motion cycle, to make this determination. Darley notes that a cadence could be utilized, but only for the purposes of calculating a measured speed (see Darley, column 65). Therefore, there is no teaching or suggestion in Pasolini or Darley of using a motion cycle within a cadence window, and updating the cadence window as actual cadence changes. Therefore, claim 20, which depends on claim 15, is not obvious over the combination of Pasolini and Darley.

Claim Rejections under 35 U.S.C. §112

Claims 1-15 stand rejected under 35 U.S.C. §112, second paragraph, as being indefinite for failing to particularly point out and distinctly claim the subject matter which applicant regards as the invention.

Applicants have amended claims 1, 11, and 15 to more clearly point out, and distinctly claim the subject matter Applicants consider their invention. Applicants respectfully request withdrawal of this rejection in light of the amendments. If the Examiner has any remaining objection with respect to the claims, as amended, the Examiner is invited to contact the undersigned.

Conclusion

Applicant respectfully submits that in view of the amendments and discussion set forth herein, the applicable rejections have been overcome. Accordingly, the present and amended claims should be found to be in condition for allowance.

If a telephone interview would expedite the prosecution of this application, the Examiner is invited to contact Judith A. Szepesi at (408) 720-8300.

If there are any additional charges/credits, please charge/credit our deposit account no. 02-2666.

Respectfully submitted,

BLAKELY, SOKOLOFF, TAYLOR & ZAFMAN LLP

Dated: January 28, 2013

/Judith Szepesi/
Judith A. Szepesi
Reg. No. 39,393

1279 Oakmead Parkway
Sunnyvale, CA 94085
(408) 720-8300

Electronic Patent Application Fee Transmittal	
Application Number:	13018321
Filing Date:	31-Jan-2011
Title of Invention:	HUMAN ACTIVITY MONITORING DEVICE
First Named Inventor/Applicant Name:	Philippe Kahn
Filer:	Judith A. Szepesi
Attorney Docket Number:	8689P027C2
Filed as Large Entity	

Utility under 35 USC 111(a) Filing Fees

Description	Fee Code	Quantity	Amount	Sub-Total in USD($)
Basic Filing:				
Pages:				
Claims:				
Miscellaneous-Filing:				
Petition:				
Patent-Appeals-and-Interference:				
Post-Allowance-and-Post-Issuance:				
Extension-of-Time:				
Extension - 1 month with $0 paid	1251	1	150	150

Description	Fee Code	Quantity	Amount	Sub-Total in USD($)
Miscellaneous:				
			Total in USD ($)	**150**

Electronic Acknowledgement Receipt	
EFS ID:	14813389
Application Number:	13018321
International Application Number:	
Confirmation Number:	8340
Title of Invention:	HUMAN ACTIVITY MONITORING DEVICE
First Named Inventor/Applicant Name:	Philippe Kahn
Customer Number:	8791
Filer:	Judith A. Szepesi
Filer Authorized By:	
Attorney Docket Number:	8689P027C2
Receipt Date:	29-JAN-2013
Filing Date:	31-JAN-2011
Time Stamp:	02:53:22
Application Type:	Utility under 35 USC 111(a)

Payment information:

Submitted with Payment	yes
Payment Type	Deposit Account
Payment was successfully received in RAM	$150
RAM confirmation Number	11054
Deposit Account	022666
Authorized User	

File Listing:

Document Number	Document Description	File Name	File Size(Bytes)/ Message Digest	Multi Part /.zip	Pages (if appl.)

1	Extension of Time	8689P027C2_Extension_of_Time.pdf	14593 36e8d6c7ec2cc05238fcc1cebb75d5185f2b36db	no	1
Warnings:					
Information:					
2		8689P027C2_AmResp_Jan2013.pdf	104468 d39a17dd672c62e7e2a9d7e806b4394d5ea33c92	yes	9

	Multipart Description/PDF files in .zip description		
	Document Description	**Start**	**End**
	Amendment/Req. Reconsideration-After Non-Final Reject	1	1
	Claims	2	5
	Applicant Arguments/Remarks Made in an Amendment	6	9

Warnings:					
Information:					
3	Fee Worksheet (SB06)	fee-info.pdf	30446 b646a4e8fdecbddc0110899d5c9989786983bbba	no	2
Warnings:					
Information:					
		Total Files Size (in bytes):	149507		

This Acknowledgement Receipt evidences receipt on the noted date by the USPTO of the indicated documents, characterized by the applicant, and including page counts, where applicable. It serves as evidence of receipt similar to a Post Card, as described in MPEP 503.

<u>New Applications Under 35 U.S.C. 111</u>
If a new application is being filed and the application includes the necessary components for a filing date (see 37 CFR 1.53(b)-(d) and MPEP 506), a Filing Receipt (37 CFR 1.54) will be issued in due course and the date shown on this Acknowledgement Receipt will establish the filing date of the application.

<u>National Stage of an International Application under 35 U.S.C. 371</u>
If a timely submission to enter the national stage of an international application is compliant with the conditions of 35 U.S.C. 371 and other applicable requirements a Form PCT/DO/EO/903 indicating acceptance of the application as a national stage submission under 35 U.S.C. 371 will be issued in addition to the Filing Receipt, in due course.

<u>New International Application Filed with the USPTO as a Receiving Office</u>
If a new international application is being filed and the international application includes the necessary components for an international filing date (see PCT Article 11 and MPEP 1810), a Notification of the International Application Number and of the International Filing Date (Form PCT/RO/105) will be issued in due course, subject to prescriptions concerning national security, and the date shown on this Acknowledgement Receipt will establish the international filing date of the application.

Attorney's Docket No. 8689P027C2 PATENT

IN THE UNITED STATES PATENT AND TRADEMARK OFFICE

Applicant	: Philippe Kahn, et al.	Examiner:	Cosimano, Edward R
Appl. No.	: 13/018,321	Art Unit:	2857
Filed	: January 31, 2011	Conf No:	8340
For	: Human Activity Monitoring Device		
Customer No.	: 08791		

CERTIFICATE OF TRANSMISSION
I hereby certify that this correspondence is being submitted electronically via EFS Web on the date shown below.

/Judith Szepesi/ January 28, 2013
Judith A. Szepesi ***Date***

Mail Stop Amendment
Commissioner for Patents
P.O. Box 1450
Alexandria, Virginia 22313-1450

PETITION FOR EXTENSION OF TIME PURSUANT TO 37 C.F.R. § 1.136 (a)

Sir:

Applicant respectfully petitions pursuant to 37 CFR 1.136(a) for a one month extension of time to file this response to the Office Action mailed 09/26/2012. The extended period is set to expire on 01/28/2013. The Director is authorized to charge in the amount of $150.00 to Deposit Account No. 02-2666 to cover the fee for a one month extension of time.

Please charge any shortages and credit any overages to our Deposit Account No. 02-2666.

Respectfully submitted,

BLAKELY, SOKOLOFF, TAYLOR & ZAFMAN, LLP

Dated: January 28, 2013 /Judith Szepesi/
Judith A. Szepesi
Reg. No. 39,393

1279 Oakmead Parkway
Sunnyvale, CA 94085
(408) 720-8300

Substitute for Form 1449/PTO				Complete if Known	
INFORMATION DISCLOSURE STATEMENT BY APPLICANT *(use as many sheets as necessary)*				Application Number	13/018,321
				Filing Date	January 31, 2011
				First Named Inventor:	Philippe Kahn
				Art Unit	2857
				Examiner Name	Cosimano, Edward R
Sheet	1	**of**	1	Attorney Docket Number	8689P027C2

U.S. PATENT DOCUMENTS

Examiner Initials*	Cite No.[1]	Document Number Number-Kind Code[2] (If known)		Publication Date MM-DD-YYYY	Name of Patentee or Applicant of Cited Document	Pages, Columns, Lines, Where Relevant Passages or Relevant Figures Appear
		US-	7,892,080	2/22/2011	Dahl, Fredrik Andreas	
		US-	2005/0245988	11/3/2005	Miesel, Keith A.	
		US-	2006/0149516	7/6/2006	Bond et al	
		US-	2007/0145680	6/28/2007	Rosenberg, Louis B	
		US-	2007/0259717	11/8/2007	Mattice et al	
		US-	2009/0124348	5/14/2009	Yoseloff et al	
		US-				
		US-				
		US-				
		US-				
		US-				
		US-				
		US-				
		US-				
		US-				
		US-				
		US-				
		US-				
		US-				
		US-				
		US-				
		US-				
		US-				
		US-				
		US-				
		US-				
		US-				
		US-				

Examiner Signature		Date Considered	

*EXAMINER: Initial if reference considered, whether or not citation is in conformance with MPEP 609; Draw line through citation if not in conformance and not considered. Include copy of this form with next communication to applicant. [1]Applicant's unique citation designation number (optional). [2]See Kinds Codes of USPTO Patent Documents at www.uspto.gov or MPEP 901.04. [3]Enter Office that issued the document, by the two-letter code (WIPO Standard ST.3). [4]For Japanese patent documents, the indication of the year of reign of the Emperor must precede the serial number of the patent document. [5]Kind of document by the appropriate symbols as indicated on the document under WIPO Standard ST. 16 if possible. [6]Applicant is to place a check mark here if English language translation is attached.

This collection of information is required by 37 CFR 1.97 and 1.98. The information is required to obtain or retain a benefit by the public which is to file (and by the USPTO to process) an application. Confidentiality is governed by 35 U.S.C. 122 and 37 CFR 1.14. This collection is estimated to take 2 hours to complete including gathering, preparing, and submitting the completed application form to the USPTO. Time will vary depending upon the individual case. Any comments on the amount of time you require to complete this form and/or suggestions for reducing this burden, should be sent to the Chief Information Officer, U.S. Patent and Trademark Office, P.O. Box 1450, Alexandria, VA 22313-1450. DO NOT SENT FEES OR COMPLETED FORMS TO THIS ADDRESS. **SEND TO: Commissioner for Patents, P.O. Box 1450, Alexandria, Virginia 22313-1450.**

If you need assistance in completing the form, call 1-800-PTO-9199 (1-800-786-9199) and select option 2.

Electronic Acknowledgement Receipt	
EFS ID:	14825452
Application Number:	13018321
International Application Number:	
Confirmation Number:	8340
Title of Invention:	HUMAN ACTIVITY MONITORING DEVICE
First Named Inventor/Applicant Name:	Philippe Kahn
Customer Number:	8791
Filer:	Judith A. Szepesi
Filer Authorized By:	
Attorney Docket Number:	8689P027C2
Receipt Date:	29-JAN-2013
Filing Date:	31-JAN-2011
Time Stamp:	21:31:41
Application Type:	Utility under 35 USC 111(a)

Payment information:

Submitted with Payment	no

File Listing:

Document Number	Document Description	File Name	File Size(Bytes)/ Message Digest	Multi Part /.zip	Pages (if appl.)
1		8689P027C2_IDS_and_SB08.pdf	51944 192a5e4aff9f356b39bb3e512451e1811b6d822c	yes	3

	Multipart Description/PDF files in .zip description		
	Document Description	**Start**	**End**
	Transmittal Letter	1	2
	Information Disclosure Statement (IDS) Form (SB08)	3	3
Warnings:			
Information:			
	Total Files Size (in bytes):	51944	

This Acknowledgement Receipt evidences receipt on the noted date by the USPTO of the indicated documents, characterized by the applicant, and including page counts, where applicable. It serves as evidence of receipt similar to a Post Card, as described in MPEP 503.

New Applications Under 35 U.S.C. 111
If a new application is being filed and the application includes the necessary components for a filing date (see 37 CFR 1.53(b)-(d) and MPEP 506), a Filing Receipt (37 CFR 1.54) will be issued in due course and the date shown on this Acknowledgement Receipt will establish the filing date of the application.

National Stage of an International Application under 35 U.S.C. 371
If a timely submission to enter the national stage of an international application is compliant with the conditions of 35 U.S.C. 371 and other applicable requirements a Form PCT/DO/EO/903 indicating acceptance of the application as a national stage submission under 35 U.S.C. 371 will be issued in addition to the Filing Receipt, in due course.

New International Application Filed with the USPTO as a Receiving Office
If a new international application is being filed and the international application includes the necessary components for an international filing date (see PCT Article 11 and MPEP 1810), a Notification of the International Application Number and of the International Filing Date (Form PCT/RO/105) will be issued in due course, subject to prescriptions concerning national security, and the date shown on this Acknowledgement Receipt will establish the international filing date of the application.

IN THE UNITED STATES PATENT AND TRADEMARK OFFICE

Applicant	: Philippe Kahn, et al.	Examiner:	Cosimano, Edward R
Appl. No.	: 13/018,321	Art Unit:	2857
Filed	: January 31, 2011	Conf No:	8340
For	: Human Activity Monitoring Device		
Customer No.	: 08791		

CERTIFICATE OF TRANSMISSION
I hereby certify that this correspondence is being submitted electronically via EFS Web on the date shown below.

/Judith Szepesi/ January 29, 2013
Judith A. Szepesi ***Date***

Mail Stop Amendment
Commissioner for Patents
P.O. Box 1450
Alexandria, Virginia 22313-1450

INFORMATION DISCLOSURE STATEMENT

Sir:

Enclosed is a copy of Information Disclosure Citation Form PTO-1449 or PTO/SB/08 together with copies of the documents cited on that form, except for copies not required to be submitted (e.g., copies of U.S. patents and U.S. published patent applications need not be enclosed). It is respectfully requested that the cited documents be considered and that the enclosed copy of Information Disclosure Citation Form PTO-1449 or PTO/SB/08 be initialed by the Examiner to indicate such consideration and a copy thereof returned to applicant(s).

Pursuant to 37 C.F.R. § 1.97, the submission of this Information Disclosure Statement is not to be construed as a representation that a search has been made and is not to be construed as an admission that the information cited in this statement is material to patentability.

Pursuant to 37 C.F.R. § 1.97, this Information Disclosure Statement is being submitted under one of the following (as indicated by an "X" to the left of the appropriate paragraph):

_____ 37 C.F.R. §1.97(b).

__X__ 37 C.F.R. §1.97(c). If so, then enclosed with this Information Disclosure Statement is one of the following:

____ A statement pursuant to 37 C.F.R. §1.97(e) or

__X__ The amount of $180.00 for the fee under 37 C.F.R. § 1.17(p) was previously paid on January 9, 2012.

_____ 37 C.F.R. §1.97(d). If so, then enclosed with this Information Disclosure Statement are the following:

(1) A statement pursuant to 37 C.F.R. §1.97(e); and

(2) A check for $180.00 for the fee under 37 C.F.R. §1.17(p) for submission of the Information Disclosure Statement.

If there are any additional charges, please charge Deposit Account No. 02-2666.

Respectfully submitted,

BLAKELY, SOKOLOFF, TAYLOR & ZAFMAN LLP

Dated: January 29, 2013

/Judith Szepesi/
Judith A. Szepesi
Reg. No. 39,393

1279 Oakmead Parkway
Sunnyvale, CA 94085
(408) 720-8300

Document code: WFEE

United States Patent and Trademark Office
Sales Receipt for Accounting Date: 02/04/2013

BMURPHY SALE #00000003 Mailroom Dt: 01/29/2013 022666 13018321
01 FC : 1252 420.00 DA

PTO/SB/06 (07-06)
Approved for use through 1/31/2007. OMB 0651-0032
U.S. Patent and Trademark Office; U.S. DEPARTMENT OF COMMERCE
Under the Paperwork Reduction Act of 1995, no persons are required to respond to a collection of information unless it displays a valid OMB control number.

PATENT APPLICATION FEE DETERMINATION RECORD

Substitute for Form PTO-875

Application or Docket Number	Filing Date	☐ To be Mailed
13/018,321	01/31/2011	

APPLICATION AS FILED – PART I

	(Column 1)	(Column 2)	SMALL ENTITY ☐		OR	OTHER THAN SMALL ENTITY	
FOR	NUMBER FILED	NUMBER EXTRA	RATE ($)	FEE ($)		RATE ($)	FEE ($)
☐ BASIC FEE (37 CFR 1.16(a), (b), or (c))	N/A	N/A	N/A			N/A	
☐ SEARCH FEE (37 CFR 1.16(k), (i), or (m))	N/A	N/A	N/A			N/A	
☐ EXAMINATION FEE (37 CFR 1.16(o), (p), or (q))	N/A	N/A	N/A			N/A	
TOTAL CLAIMS (37 CFR 1.16(i))	minus 20 =	*	X $ =		OR	X $ =	
INDEPENDENT CLAIMS (37 CFR 1.16(h))	minus 3 =	*	X $ =			X $ =	
☐ APPLICATION SIZE FEE (37 CFR 1.16(s))	If the specification and drawings exceed 100 sheets of paper, the application size fee due is $250 ($125 for small entity) for each additional 50 sheets or fraction thereof. See 35 U.S.C. 41(a)(1)(G) and 37 CFR 1.16(s).						
☐ MULTIPLE DEPENDENT CLAIM PRESENT (37 CFR 1.16(j))							
* If the difference in column 1 is less than zero, enter "0" in column 2.			TOTAL			TOTAL	

APPLICATION AS AMENDED – PART II

AMENDMENT	01/29/2013	(Column 1) CLAIMS REMAINING AFTER AMENDMENT		(Column 2) HIGHEST NUMBER PREVIOUSLY PAID FOR	(Column 3) PRESENT EXTRA	SMALL ENTITY RATE ($)	ADDITIONAL FEE ($)	OR	OTHER THAN SMALL ENTITY RATE ($)	ADDITIONAL FEE ($)
	Total (37 CFR 1.16(i))	* 19	Minus	** 20	= 0	X $ =		OR	X $62=	0
	Independent (37 CFR 1.16(h))	* 4	Minus	***4	= 0	X $ =		OR	X $250=	0
	☐ Application Size Fee (37 CFR 1.16(s))									
	☐ FIRST PRESENTATION OF MULTIPLE DEPENDENT CLAIM (37 CFR 1.16(j))							OR		
						TOTAL ADD'L FEE		OR	TOTAL ADD'L FEE	0

AMENDMENT		(Column 1) CLAIMS REMAINING AFTER AMENDMENT		(Column 2) HIGHEST NUMBER PREVIOUSLY PAID FOR	(Column 3) PRESENT EXTRA	RATE ($)	ADDITIONAL FEE ($)		RATE ($)	ADDITIONAL FEE ($)
	Total (37 CFR 1.16(i))	*	Minus	**	=	X $ =		OR	X $ =	
	Independent (37 CFR 1.16(h))	*	Minus	***	=	X $ =		OR	X $ =	
	☐ Application Size Fee (37 CFR 1.16(s))									
	☐ FIRST PRESENTATION OF MULTIPLE DEPENDENT CLAIM (37 CFR 1.16(j))							OR		
						TOTAL ADD'L FEE		OR	TOTAL ADD'L FEE	

* If the entry in column 1 is less than the entry in column 2, write "0" in column 3.

** If the "Highest Number Previously Paid For" IN THIS SPACE is less than 20, enter "20".

*** If the "Highest Number Previously Paid For" IN THIS SPACE is less than 3, enter "3".

The "Highest Number Previously Paid For" (Total or Independent) is the highest number found in the appropriate box in column 1.

Legal Instrument Examiner:
/BRENDA MURPHY/

This collection of information is required by 37 CFR 1.16. The information is required to obtain or retain a benefit by the public which is to file (and by the USPTO to process) an application. Confidentiality is governed by 35 U.S.C. 122 and 37 CFR 1.14. This collection is estimated to take 12 minutes to complete, including gathering, preparing, and submitting the completed application form to the USPTO. Time will vary depending upon the individual case. Any comments on the amount of time you require to complete this form and/or suggestions for reducing this burden, should be sent to the Chief Information Officer, U.S. Patent and Trademark Office, U.S. Department of Commerce, P.O. Box 1450, Alexandria, VA 22313-1450. DO NOT SEND FEES OR COMPLETED FORMS TO THIS ADDRESS. **SEND TO: Commissioner for Patents, P.O. Box 1450, Alexandria, VA 22313-1450.**

If you need assistance in completing the form, call 1-800-PTO-9199 and select option 2.

UNITED STATES PATENT AND TRADEMARK OFFICE

UNITED STATES DEPARTMENT OF COMMERCE
United States Patent and Trademark Office
Address: COMMISSIONER FOR PATENTS
P.O. Box 1450
Alexandria, Virginia 22313-1450
www.uspto.gov

APPLICATION NO.	FILING DATE	FIRST NAMED INVENTOR	ATTORNEY DOCKET NO.	CONFIRMATION NO.
13/018,321	01/31/2011	Philippe Kahn	8689P027C2	8340

8791 7590 09/26/2012

BLAKELY SOKOLOFF TAYLOR & ZAFMAN
1279 Oakmead Parkway
Sunnyvale, CA 94085-4040

EXAMINER	
COSIMANO, EDWARD R	
ART UNIT	PAPER NUMBER
2857	

MAIL DATE	DELIVERY MODE
09/26/2012	PAPER

Please find below and/or attached an Office communication concerning this application or proceeding.

The time period for reply, if any, is set in the attached communication.

Office Action Summary	Application No.	Applicant(s)	
	13/018,321	KAHN ET AL.	
	Examiner	Art Unit	
	EDWARD COSIMANO	2857	

-- The MAILING DATE of this communication appears on the cover sheet with the correspondence address --

Period for Reply

A SHORTENED STATUTORY PERIOD FOR REPLY IS SET TO EXPIRE *3* MONTH(S) OR THIRTY (30) DAYS, WHICHEVER IS LONGER, FROM THE MAILING DATE OF THIS COMMUNICATION.

- Extensions of time may be available under the provisions of 37 CFR 1.136(a). In no event, however, may a reply be timely filed after SIX (6) MONTHS from the mailing date of this communication.
- If NO period for reply is specified above, the maximum statutory period will apply and will expire SIX (6) MONTHS from the mailing date of this communication.
- Failure to reply within the set or extended period for reply will, by statute, cause the application to become ABANDONED (35 U.S.C. § 133). Any reply received by the Office later than three months after the mailing date of this communication, even if timely filed, may reduce any earned patent term adjustment. See 37 CFR 1.704(b).

Status

1)☒ Responsive to communication(s) filed on *09 January 2012*.

2a)☐ This action is **FINAL**. 2b)☒ This action is non-final.

3)☐ An election was made by the applicant in response to a restriction requirement set forth during the interview on _____; the restriction requirement and election have been incorporated into this action.

4)☐ Since this application is in condition for allowance except for formal matters, prosecution as to the merits is closed in accordance with the practice under *Ex parte Quayle*, 1935 C.D. 11, 453 O.G. 213.

Disposition of Claims

5)☒ Claim(s) *1-20* is/are pending in the application.

5a) Of the above claim(s) *none* is/are withdrawn from consideration.

6)☐ Claim(s) _____ is/are allowed.

7)☒ Claim(s) *1-20* is/are rejected.

8)☐ Claim(s) _____ is/are objected to.

9)☐ Claim(s) _____ are subject to restriction and/or election requirement.

Application Papers

10)☐ The specification is objected to by the Examiner.

11)☒ The drawing(s) filed on *31 January 2011* is/are: a)☒ accepted or b)☐ objected to by the Examiner.

Applicant may not request that any objection to the drawing(s) be held in abeyance. See 37 CFR 1.85(a).

Replacement drawing sheet(s) including the correction is required if the drawing(s) is objected to. See 37 CFR 1.121(d).

12)☐ The oath or declaration is objected to by the Examiner. Note the attached Office Action or form PTO-152.

Priority under 35 U.S.C. § 119

13)☐ Acknowledgment is made of a claim for foreign priority under 35 U.S.C. § 119(a)-(d) or (f).

a)☐ All b)☐ Some * c)☐ None of:

1.☐ Certified copies of the priority documents have been received.

2.☐ Certified copies of the priority documents have been received in Application No. _____.

3.☐ Copies of the certified copies of the priority documents have been received in this National Stage application from the International Bureau (PCT Rule 17.2(a)).

* See the attached detailed Office action for a list of the certified copies not received.

Attachment(s)

1) ☒ Notice of References Cited (PTO-892)
2) ☐ Notice of Draftsperson's Patent Drawing Review (PTO-948)
3) ☒ Information Disclosure Statement(s) (PTO/SB/08) Paper No(s)/Mail Date *01/09/2012*.
4) ☐ Interview Summary (PTO-413) Paper No(s)/Mail Date. _____ .
5) ☐ Notice of Informal Patent Application
6) ☐ Other: _____.

Notice of References Cited	Application/Control No. 13/018,321	Applicant(s)/Patent Under Reexamination KAHN ET AL.	
	Examiner EDWARD COSIMANO	Art Unit 2857	Page 1 of 1

U.S. PATENT DOCUMENTS

*		Document Number Country Code-Number-Kind Code	Date MM-YYYY	Name	Classification
*	A	US-5,485,402	01-1996	Smith et al.	702/160
*	B	US-2006/0174685	08-2006	Skvortsov et al.	073/001.37
*	C	US-2007/0143068	06-2007	Pasolini et al.	702/160
*	D	US-7,305,323	12-2007	Skvortsov et al.	702/160
*	E	US-2008/0243432	10-2008	Kato et al.	702/160
*	F	US-7,463,997	12-2008	Pasolini et al.	702/160
*	G	US-7,788,059	08-2010	Kahn et al.	702/141
*	H	US-8,187,182	05-2012	Kahn et al	600/300
	I	US-			
	J	US-			
	K	US-			
	L	US-			
	M	US-			

FOREIGN PATENT DOCUMENTS

*		Document Number Country Code-Number-Kind Code	Date MM-YYYY	Country	Name	Classification
	N	JP 2005-309691 A	11-2005	Japan	Tsuji	
	O					
	P					
	Q					
	R					
	S					
	T					

NON-PATENT DOCUMENTS

*		Include as applicable: Author, Title Date, Publisher, Edition or Volume, Pertinent Pages)
	U	
	V	
	W	
	X	

*A copy of this reference is not being furnished with this Office action. (See MPEP § 707.05(a).)
Dates in MM-YYYY format are publication dates. Classifications may be US or foreign.

	Type	L #	Hits	Search Text	DBs	Time Stamp
1	BRS	L1	491919	(dominant or principle or principal or major or critical or override or overridden or overriding or ((most or greatest or largest) near2 important) or sense or sensing or detect$1r or detection) near5 (axis or axies or direction or vector or orientate or orientated or orientating or orientation or incline or inclined or inclining or inclination)	US-PGPUB; USPAT; USOCR; FPRS; EPO; JPO; DERWENT; IBM_TDB	2012/05/19 16:30
2	BRS	L2	59617	L1 near10 (inertial or ins or ims or gyro or gyroscope or acc or accel or accelerate or accelerated or accelerating or acceleration or mem or micro$1electr$4mechanical$1machine or micro$1electr$4machine or nem or nano$1electr$4mechanical$1machine or nano$1electr$4machine)	US-PGPUB; USPAT; USOCR; FPRS; EPO; JPO; DERWENT; IBM_TDB	2012/05/19 16:30
3	BRS	L3	1846330	(drift or drifted or drifting or vary or variance or varied or varying or variation or deviate or deviated or deviating or deviation or offset or depart or departed or departing or change or changed or changing or chang$1r or alter or altered or altering or alteration or alter$1r or modify or modified or modifying or modification or modif$2r or delta or adjust or adjusted or adjusting or adjustment or adjust$1r or shift or shifted or shifting or shift$1r) near6 (axis or axies or direction of vector or orientate or orientated or orientating or orientation or incline or inclined or inclining or inclination)	US-PGPUB; USPAT; USOCR; FPRS; EPO; JPO; DERWENT; IBM_TDB	2012/05/19 16:30

	Type	L #	Hits	Search Text	DBs	Time Stamp
4	BRS	L4	118047	L3 near6 (inertial or ins or ims or gyro or gyroscope or acc or accel or accelerate or accelerated or accelerating or acceleration or mem or micro$1electr$4mechanical$1machine or micro$1electr$4machine or nem or nano$1electr$4mechanical$1machine or nano$1electr$4machine)	US-PGPUB; USPAT; USOCR; FPRS; EPO; JPO; DERWENT; IBM_TDB	2012/05/19 16:30
5	BRS	L5	11325	L1 near5 (update or updated or updating or updat$1r or correct or corrected or correcting or correction or correct$1r or compensate or compensated or compensating or compensation or compensat$1r or calibrate or calibrated or calibrating or calibration or calibrat$1r)	US-PGPUB; USPAT; USOCR; FPRS; EPO; JPO; DERWENT; IBM_TDB	2012/05/19 16:30
6	BRS	L6	170	L4 same L5	US-PGPUB; USPAT; USOCR; FPRS; EPO; JPO; DERWENT; IBM_TDB	2012/05/19 16:30

	Type	L #	Hits	Search Text	DBs	Time Stamp
7	BRS	L7	1117666	(count or counted or counting or number or numbered or numbering or increment or incremented or incrementing or accumulate or accumulated or accumulating or accumulation) near5 (motion or move or moved or moving or movements or acc or accel or accelerate or accelerated or accelerating or acceleration or step or stepping or walk or walking or run or running or walk or walking or run or running or jog or jogging or act or acting or action or active or activity or gait or stride)	US-PGPUB; USPAT; USOCR; FPRS; EPO; JPO; DERWENT; IBM_TDB	2012/05/19 16:30
8	BRS	L8	1282	L1 near5 L7	US-PGPUB; USPAT; USOCR; FPRS; EPO; JPO; DERWENT; IBM_TDB	2012/05/19 16:30
9	BRS	L9	5	L2 and L6 and L8	US-PGPUB; USPAT; USOCR; FPRS; EPO; JPO; DERWENT; IBM_TDB	2012/05/19 16:30

	Type	L #	Hits	Search Text	DBs	Time Stamp
10	BRS	L10	1681455	(motion or move or moved or moving or movements or step or stepping or walk or walking or run or running or walk or walking or run or running or jog or jogging or act or acting or action or active or activity or gait or stride) near4 (number or numbered or numbering or count or counted or counting or accumulate or accumulated or accumulating or accumulation or at$1least or ((more or greater or larger or bigger) adj2 than) or plural or plurality or multiple or multi)	US-PGPUB; USPAT; USOCR; FPRS; EPO; JPO; DERWENT; IBM_TDB	2012/05/19 16:30

	Type	L #	Hits	Search Text	DBs	Time Stamp
11	BRS	L11	427768	L10 near6 (measure or measured or measuring or measurement or monitor or monitored or monitoring or capture or captured or capturing or detect or detected or detecting or detection or detect$1r or sense or sensed or sensing or sens$1r or transduce or transduced or transducing or transducer or sample or sampled or sampling or sampl$1r or determine or determined or determining or determination or determin$1r or scan or scanned or scanning or scann$1r or met$1r or metered or metering or gauge or gauged or gauging or gaug$1r or gage or gaged or gaging or gag$1r or acquire or acquired or acquiring or acquisition or acquisitioning or acquir$1r or collect or collected or collecting or collection or collect$1r or log or logged or logging or logg$1r or record or recorded or recording or record$1r or accumulate or accumulated or accumulating or accumulation or accumulat$1r or register or registered or registering or registration or buffer or buffered or buffering or store or stored or storing or storage or memorize or memorized or memorizing or memorization or memory)	US-PGPUB; USPAT; USOCR; FPRS; EPO; JPO; DERWENT; IBM_TDB	2012/05/19 16:30

	Type	L #	Hits	Search Text	DBs	Time Stamp
12	BRS	L12	100328	L10 near5 (judge or judged or judging or judgment or judgement or judg$1r or evaluate or evaluated or evaluating or evaluation or evaluat$1r or analysis or analyze or analyzed or analyzing or analyz$1r or allocate or allocated or allocating or allocation or allocat$1r or assign or assigned or assigning or assignment or assign$1r or id or identify or identifying or identified or identification or recogni$1e or recogni$1ed or recogni$1ing or recognition)	US-PGPUB; USPAT; USOCR; FPRS; EPO; JPO; DERWENT; IBM_TDB	2012/05/19 16:30
13	BRS	L13	1182725	(cadence or repeat or repeated or repeating or repetition or periodic or cycle or cyclic or cyclical or gait or stride) near3 (criteria or criterion or criterium or threshold or limit or require or required or requiring or requirement or tolerance or window or range or band or qualify or qualified or qualifying or qualification or within or with$1in or standard or bench or bench$1mark or bench$1marked or bench$1marking or baseline or base or reference or period or time or timing or interval)	US-PGPUB; USPAT; USOCR; FPRS; EPO; JPO; DERWENT; IBM_TDB	2012/05/19 16:30
14	BRS	L14	544	L12 near15 L13	US-PGPUB; USPAT; USOCR; FPRS; EPO; JPO; DERWENT; IBM_TDB	2012/05/19 16:30

	Type	L #	Hits	Search Text	DBs	Time Stamp
15	BRS	L15	921967	(motion or move or moved or moving or movements or step or stepping or walk or walking or run or running or walk or walking or run or running or jog or jogging or act or acting or action or active or activity or gait or stride) near4 (number or numbered or numbering or count or counted or counting or accumulate or accumulated or accumulating or accumulation)	US-PGPUB; USPAT; USOCR; FPRS; EPO; JPO; DERWENT; IBM_TDB	2012/05/19 16:30
16	BRS	L16	3056618	(motion or move or moved or moving or movements or step or stepping or walk or walking or run or running or walk or walking or run or running or jog or jogging or act or acting or action or active or activity or gait or stride) near4 (measure or measured or measuring or measurement or monitor or monitored or monitoring or capture or captured or capturing or detect or detected or detecting or detection or detect$1r or sense or sensed or sensing or sens$1r or transduce or transduced or transducing or transducer or sample or sampled or sampling or sampl$1r or determine or determined or determining or determination or determin$1r or scan or scanned or scanning or scann$1r or met$1r or metered or metering or gauge or gauged or gauging or gaug$1r or gage or gaged or gaging or gag$1r or acquire or acquired or acquiring or acquisition or acquisitioning or acquir$1r or collect or collected or collecting or collection or collect$1r or log or logged or logging or logg$1r or accumulate or accumulated or accumulating or accumulation or accumulat$1r)	US-PGPUB; USPAT; USOCR; FPRS; EPO; JPO; DERWENT; IBM_TDB	2012/05/19 16:30

	Type	L #	Hits	Search Text	DBs	Time Stamp
17	BRS	L17	125484	L15 near15 L16	US-PGPUB; USPAT; USOCR; FPRS; EPO; JPO; DERWENT; IBM_TDB	2012/05/19 16:30
18	BRS	L18	163	L11 and L14 and L17	US-PGPUB; USPAT; USOCR; FPRS; EPO; JPO; DERWENT; IBM_TDB	2012/05/19 16:30
19	BRS	L19	1365	L1 near15 L15	US-PGPUB; USPAT; USOCR; FPRS; EPO; JPO; DERWENT; IBM_TDB	2012/05/19 16:30
20	BRS	L20	3	L9 and L19	US-PGPUB; USPAT; USOCR; FPRS; EPO; JPO; DERWENT; IBM_TDB	2012/05/19 16:30
21	BRS	L21	30585	(kahn$1.in. adj2 (p.in. or philippe.in.)) or ((kinsolving$1.in. or kingsolving$1.in.) adj2 (a.in. or arthur.in.)) or (christensen$1.in. adj2 (m.in. or mark.in.)) or (lee$1.in. adj2 (b.in. or brian.in. or brain.in.)) or (vogel$1.in. adj2 (d.in. or david.in.))	US-PGPUB; USPAT; USOCR; FPRS; EPO; JPO; DERWENT; IBM_TDB	2012/05/19 16:30

	Type	L #	Hits	Search Text	DBs	Time Stamp
22	BRS	L22	24	"13"$1"018"$1"321" or "12"$1"694"$1"135" or "7"$1"881"$1"902" or "11"$1"644"$1"455" or "7"$1"653"$1"508" or "60"$1"900"$1"412" or "60"$1"926"$1"027" or "11"$1"891"$1"112" or "2009"$1"0"$1"043"$1"531" or "7"$1"647"$1"196" or "12"$1"069"$1"267" or "12"$1"108"$1"486" or "2009"$1"0"$1"234"$1"614" or "7"$1"987"$1"070" or "12"$1"834"$1"845" or ("20090043531" or "20090234614" or "7647196" or "7653508" or "7881902" or "7987070").pn.	US-PGPUB; USPAT; USOCR; FPRS; EPO; JPO; DERWENT; IBM_TDB	2012/05/19 16:30

	Type	L #	Hits	Search Text	DBs	Time Stamp
23	BRS	L23	1699	"4285041" or "4578769" or "5446725" or "5446775" or "5583776" or "5485402" or "5593431" or "5654619" or "5778882" or "5955667" or "5976083" or "6013007" or "6122595" or "6135951" or "6145389" or "6282496" or "20020023654" or "6353449" or "6369794" or "20020040601" or "20020089425" or "6428490" or "20020109600" or "20020116147" or "20020118121" or "20020151810" or "6493652" or "6496695" or "20030018430" or "20030023192" or "6513381" or "6522266" or "6532419" or "20030048218" or "6539336" or "20030083596" or "20030093248" or "20030109258" or "20030139692" or "6611789" or "20030208335" or "6644322" or "6700499" or "20040064286"	US-PGPUB; USPAT; USOCR; FPRS; EPO; JPO; DERWENT; IBM_TDB	2012/05/19 16:30

	Type	L #	Hits	Search Text	DBs	Time Stamp
24	BRS	L24	606	"20040077954" or "6744403" or "20040107072" or "6771250" or "6786877" or "6790178" or "20040186695" or "6813582" or "20040225467" or "20040230138" or "6823036" or "20040236500" or "6826477" or "20040260191" or "6836744" or "20050021270" or "20050021292" or "20050033200" or "20050038626" or "6881191" or "6885971" or "6895341" or "6898550" or "20050132797" or "6928382" or "6941239" or "20050202934" or "20050210300" or "20050222801" or "20050232388" or "20050232404" or "6959259" or "20050238132" or "20050240375" or "20050245988" or "20050248718" or "6975959" or "6983219" or "20060017561" or "20060020177"	US-PGPUB; USPAT; USOCR; FPRS; EPO; JPO; DERWENT; IBM_TDB	2012/05/19 16:30

	Type	L #	Hits	Search Text	DBs	Time Stamp
25	BRS	L25	375	"20060020421" or "7010332" or "20060063980" or "20060064276" or "20060100546" or "20060104018" or "7054784" or "7057551" or "20060136173" or "20060143645" or "7070571" or "7072789" or "20060149516" or "20060161377" or "20060167387" or "20060174685" or "7092846" or "20060206258" or "20060223547" or "20060235642" or "20060259268" or "7145461" or "7148797" or "20060284979" or "20060288781" or "7158912" or "7169084" or "7171331" or "20070032951" or "7177684" or "20070038364" or "20070061105" or "20070063850" or "20070067094" or "20070073482" or "7200517" or "20070082789" or "7212943" or "7216053" or "7220220"	US-PGPUB; USPAT; USOCR; FPRS; EPO; JPO; DERWENT; IBM_TDB	2012/05/19 16:30

	Type	L #	Hits	Search Text	DBs	Time Stamp
26	BRS	L26	295	"20070123806" or "20070125852" or "20070130582" or "20070142715" or "20070143068" or "20070145680" or "20070150136" or "7254516" or "7255437" or "7263461" or "20070208530" or "20070208531" or "20070208544" or "20070213126" or "20070250261" or "20070259716" or "20070259717" or "20070260418" or "20070260482" or "7297088" or "20070276295" or "7305323" or "7313440" or "7328611" or "7334472" or "7353112" or "7382611" or "7387611" or "20080171918" or "7421369" or "7428471" or "20080243432" or "7451056" or "7457719" or "7463997" or "7467060" or "20090015421" or "20090018773" or "20090047645" or "7512515" or "7526402" or "20090124348" or "7561960" or "20090213002" or "7586032"	US-PGPUB; USPAT; USOCR; FPRS; EPO; JPO; DERWENT; IBM_TDB	2012/05/19 16:35

	Type	L #	Hits	Search Text	DBs	Time Stamp
27	BRS	L27	87	"7608050" or "7617071" or "7627423" or "20090319221" or "7640134" or "7640804" or "7648441" or "7672781" or "20100056872" or "20100057398" or "7679601" or "7725139" or "7747409" or "7752011" or "7753861" or "7774156" or "7788059" or "7788071" or "7857772" or "7883445" or "7892080" or "7962312" or "8152693" or "8179321" or "8187182"	US-PGPUB; USPAT; USOCR; FPRS; EPO; JPO; DERWENT; IBM_TDB	2012/05/19 16:35
28	BRS	L28	4	"2005"$1"309691"	US-PGPUB; USPAT; USOCR; FPRS; EPO; JPO; DERWENT; IBM_TDB	2012/05/19 16:35
29	BRS	L29	1131	((L2 or L6 or L8 or L11 or L14 or L17 or L19) and (L21 or L22 or L23 or L24 or L25 or L26 or L27 or L28)) or ((L2 and L5 and (L8 or (L8 same L15))) and (g01b$1"5"$1"00" or g01b$1"5"$1"02" or g01c$1"22"$1"00" or g01c$1"25"$1"00" or g01p$1"13"$1"00" or g01d$1"7"$1"00" or g06f$1"11"$1"00" or g06f$1"11"$1"30" or g06f$1"11"$1"32" or g06f$1"17"$1"00" or g06f$1"17"$1"40" or g06f$1"19"$1"00"))	US-PGPUB; USPAT; USOCR; FPRS; EPO; JPO; DERWENT; IBM_TDB	2012/05/19 16:36
30	BRS	L30	1277	L9 or L18 or L20 or L29	US-PGPUB; USPAT; USOCR; FPRS; EPO; JPO; DERWENT; IBM_TDB	2012/05/19 16:36

Reviewed L30 Ti, Ab, Kwic All

/ERC/
19 May 2012

	Type	L #	Hits	Search Text	DBs	Time Stamp
31	BRS	L31	1952	("2005309691").pn. or ((@pd>="19470101" and @pd<="19710101") and (33/700 or 33/701 or 73/1.01 or 73/1.37 or 73/1.38 or 73/1.75 or 73/1.76 or 73/1.77 or 73/1.78 or 73/1.79 or 73/1.81 or 73/432.1 or 73/865.4 or 73/865.8 or 377/1 or 377/13 or 377/15 or 377/17 or 377/19 or 377/20 or 377/24 or 377/24.1 or 377/24.2 or 702/1 or 702/85 or 702/97 or 702/104 or 702/127 or 702/141 or 702/150 or 702/155 or 702/158 or 702/160 or 702/187 or 702/189 or 708/100 or 708/101 or 708/105 or 708/131 or 708/160 or 708/200 or 708/212).ccls.)	US-PGPUB; USPAT; USOCR; FPRS; EPO; JPO; DERWENT; IBM_TDB	2012/05/19 16:36

Reviewed L30 Ti, Ab, Kwic All

/ERC/
19 May 2012

	Document ID	Publication Date	Inventor	Current OR	Current XRef	Pages
1	US 5485402 A	19960116	Smith; Douglas G. et al.	702/160	340/870.01; 340/870.28	10
2	US 5976083 A	19991102	Richardson; J. Jeffrey et al.	600/300	482/8; 482/901; 600/481; 600/587	34
3	US 6135951 A	20001024	Richardson; J. Jeffrey et al.	600/300	482/8; 600/592; 600/595	32
4	US 6145389 A	20001114	Ebeling; W. H. Carl et al.	73/865.4		14
5	US 6369794 B1	20020409	Sakurai; Yasuhiro et al.	345/156	379/433.04	37
6	US 20020089425 A1	20020711	Kubo, Nobuo et al.	340/573.1	340/669	28
7	US 20030018430 A1	20030123	Ladetto, Quentin et al.	701/217	701/200	56
8	US 6611789 B1	20030826	Darley; Jesse	702/160	702/141; 702/142; 702/176	87
9	US 6700499 B2	20040302	Kubo; Nobuo et al.	340/686.1	340/573.1; 340/573.7; 482/3; 482/74; 600/510; 600/552; 600/553; 73/379.01; 73/379.09	27
10	US 6826477 B2	20041130	Ladetto; Quentin et al.	701/217	340/944; 701/200; 701/213; 73/178R	58
11	US 20050232388 A1	20051020	Tsuji, Tomoharu	377/24.2		10
12	US 20050238132 A1	20051027	Tsuji, Tomoharu	377/24.2		10
13	JP 2005309691 A	20051104	TSUJI, TOMOHARU			9

L30 Results

/ERC/
19 May 2012

	Document ID	Publication Date	Inventor	Current OR	Current XRef	Pages
14	US 20060020177 A1	20060126	Seo; Jeong-Wook et al.	600/300	482/8; 600/595	90
15	US 20060174685 A1	20060810	Skvortsov; Vladimir et al.	73/1.37		8
16	US 7169084 B2	20070130	Tsuji; Tomoharu	482/8	482/1; 482/9; 702/160	9
17	US 20070061105 A1	20070315	Darley; Jesse et al.	702/182		86
18	US 20070067094 A1	20070322	Park; Kyong-Ha et al.	701/200	702/141	13
19	US 20070143068 A1	20070621	Pasolini; Fabio et al.	702/160		11
20	US 20070208531 A1	20070906	Darley; Jesse et al.	702/142	702/158; 702/178	86
21	US 7297088 B2	20071120	Tsuji; Tomoharu	482/3	377/24.2; 482/8; 482/900; 702/160	10
22	US 7305323 B2	20071204	Skvortsov; Vladimir et al.	702/160	377/24.2; 702/141	8
23	US 7334472 B2	20080226	Seo; Jeong-Wook et al.	73/379.01		89
24	US 7428471 B2	20080923	Darley; Jesse et al.	702/182	36/132; 36/136; 377/23; 377/24.2; 702/141; 702/142; 702/144; 702/160; 702/176; 73/597	83
25	US 20080243432 A1	20081002	Kato; Kazuo et al.	702/160		7
26	US 7457719 B1	20081125	Kahn; Philippe et al.	702/141		16
27	US 7463997 B2	20081209	Pasolini; Fabio et al.	702/160		12
28	US 20090043531 A1	20090212	Kahn; Philippe et al.	702/149		22

L30 Results

/ERC/
19 May 2012

	Document ID	Publication Date	Inventor	Current OR	Current XRef	Pages
29	US 20090234614 A1	20090917	Kahn; Philippe et al.	702/141	351/158	18
30	US 7617071 B2	20091110	Darley; Jesse et al.	702/165	702/142; 702/158; 702/160; 702/176; 73/597	82
31	US 20090319221 A1	20091224	Kahn; Philippe et al.	702/141		31
32	US 7640134 B2	20091229	Park; Kyong-Ha et al.	702/141	600/587; 600/592; 600/595; 73/491; 73/865.4	13
33	US 7647196 B2	20100112	Kahn; Philippe et al.	702/149	702/142; 702/150; 702/154	22
34	US 7653508 B1	20100126	Kahn; Philippe et al.	702/160	33/700; 377/1; 377/13; 377/24.2; 377/25; 702/1; 702/127; 702/155; 702/158; 702/187; 702/189	19
35	US 20100057398 A1	20100304	Darley; Jesse et al.	702/160	702/142	85
36	US 20100056872 A1	20100304	Kahn; Philippe et al.	600/300		22
37	US 7753861 B1	20100713	Kahn; Philippe et al.	600/595	482/8; 482/9; 600/300; 600/301; 600/587	24

L30 Results

/ERC/
19 May 2012

	Document ID	Publication Date	Inventor	Current OR	Current XRef	Pages
38	US 7788059 B1	20100831	Kahn; Philippe et al.	702/141		17
39	US 7881902 B1	20110201	Kahn; Philippe et al.	702/160	377/24.2; 702/97	19
40	US 7962312 B2	20110614	Darley; Jesse et al.	702/165	702/142; 702/158; 702/160; 702/176; 73/597	84
41	US 7987070 B2	20110726	Kahn; Philippe et al.	702/160	351/41; 73/1.38	19

L30 Results

/ERC/
19 May 2012

	Document ID	Publication Date	Inventor	Current OR	Current XRef	Pages
1	JP 2005309691 A	20051104	TSUJI, TOMOHARU			9

L31 Results

/ERC/
19 May 2012

Index of Claims	Application/Control No.	Applicant(s)/Patent Under Reexamination
	13018321	KAHN ET AL.
	Examiner	**Art Unit**
	EDWARD COSIMANO	2857

✓	Rejected	-	Cancelled	N	Non-Elected	A	Appeal
=	Allowed	÷	Restricted	I	Interference	O	Objected

☐ Claims renumbered in the same order as presented by applicant ☐ CPA ☐ T.D. ☐ R.1.47

CLAIM		DATE								
Final	Original	11/04/2011	01/21/2012	05/20/2012						
	1	=	=	✓						
	2	=	=	✓						
	3	=	=	✓						
	4	=	=	✓						
	5	=	=	✓						
	6	=	=	✓						
	7	=	=	✓						
	8	=	=	✓						
	9	=	=	✓						
	10	=	=	✓						
	11	=	=	✓						
	12	=	=	✓						
	13	=	=	✓						
	14	=	=	✓						
	15	=	=	✓						
	16	=	=	✓						
	17	=	=	✓						
	18	=	=	✓						
	19	=	=	✓						
	20	=	=	✓						

Substitute for Form 1449/PTO				Complete if Known	
INFORMATION DISCLOSURE STATEMENT BY APPLICANT *(use as many sheets as necessary)*				Application Number	13/018,321
				Filing Date	January 31, 2011
				First Named Inventor:	Philippe Kahn
				Art Unit	2857
				Examiner Name	Cosimano, Edward R
Sheet	1	**of**	1	Attorney Docket Number	8689P027C2

U.S. PATENT DOCUMENTS

Examiner Initials*	Cite No.[1]	Document Number Number-Kind Code[2] (If known)	Publication Date MM-DD-YYYY	Name of Patentee or Applicant of Cited Document	Pages, Columns, Lines, Where Relevant Passages or Relevant Figures Appear
		US- 7,892,080	2/22/2011	Dahl, Fredrik Andreas	
		US- 2005/0245988	11/3/2005	Miesel, Keith A.	
		US- 2006/0149516	7/6/2006	Bond et al.	
		US- 2007/0145680	6/28/2007	Rosenberg, Louis B.	
		US- 2007/0250717	11/8/2007	Mattias et al.	
		US- 2008/0124040	5/14/2008	Yoseloff et al.	
		US-			
		US-			
		US-			
		US-			
		US-			
		US-			
		US-			
		US-			
		US-			
		US-			
		US-			
		US-			
		US-			
		US-			
		US-			
		US-			
		US-			
		US-			
		US-			
		US-			
		US-			
		US-			

Examiner Signature	/Edward Cosimano/	Date Considered	05/20/2012

*EXAMINER: Initial if reference considered, whether or not citation is in conformance with MPEP 609; Draw line through citation if not in conformance and not considered. Include copy of this form with next communication to applicant. [1]Applicant's unique citation designation number (optional). [2]See Kinds Codes of USPTO Patent Documents at www.uspto.gov or MPEP 901.04. [3]Enter Office that issued the document, by the two-letter code (WIPO Standard ST.3). [4]For Japanese patent documents, the indication of the year of reign of the Emperor must precede the serial number of the patent document. [5]Kind of document by the appropriate symbols as indicated on the document under WIPO Standard ST. 16 if possible. [6]Applicant is to place a check mark here if English language translation is attached.

This collection of information is required by 37 CFR 1.97 and 1.98. The information is required to obtain or retain a benefit by the public which is to file (and by the USPTO to process) an application. Confidentiality is governed by 35 U.S.C. 122 and 37 CFR 1.14. This collection is estimated to take 2 hours to complete including gathering, preparing, and submitting the completed application form to the USPTO. Time will vary depending upon the individual case. Any comments on the amount of time you require to complete this form and/or suggestions for reducing this burden, should be sent to the Chief Information Officer, U.S. Patent and Trademark Office, P.O. Box 1450, Alexandria, VA 22313-1450. DO NOT SENT FEES OR COMPLETED FORMS TO THIS ADDRESS. **SEND TO: Commissioner for Patents, P.O. Box 1450, Alexandria, Virginia 22313-1450.**

If you need assistance in completing the form, call 1-800-PTO-9199 (1-800-786-9199) and select option 2.

PAT-NO: JP02005309691A
DOCUMENT-IDENTIFIER: JP 2005-309691 A
TITLE: ELECTRONIC PEDOMETER
PUBN-DATE: November 4, 2005
INVENTOR-INFORMATION:
NAME COUNTRY
TSUJI, TOMOHARU N/A
INT-CL (IPC): G06M007/00, G01C022/00

ABSTRACT:

PROBLEM TO BE SOLVED: To perform much more accurate measurement of the number of steps even when any walking signal enough for detection is not obtained.

SOLUTION: A signal detected by an acceleration detecting part 101 having an acceleration sensor 100 is compared with a moving average value calculated by a walking cycle calculating part 108 by a walking cycle comparing part 106 after a fixed noise is removed by a filter part 105 of a counting part 102, and each signal in a predetermined cyclic range is counted by a number of step count part 107 as the number of steps for one step. A signal in a range similar to the n times of a predetermined cycle among signals beyond a predetermined cyclic range is judged as the number of steps for n steps by a beyond-specification number of step processing part 109, and counted as the number of steps for n steps by a number of step count part 107. The number of steps counted by the number of step count part 107 is displayed at a display part 103.

COPYRIGHT: (C)2006,JPO&NCIPI

(19)日本国特許庁(JP)　(12)公開特許公報(A)　(11)特許出願公開番号
特開2005-309691
(P2005-309691A)
(43)公開日　平成17年11月4日(2005.11.4)

(51)Int.Cl.[7]	F I		テーマコード（参考）
G06M 7/00	G06M 7/00	J	2F024
G01C 22/00	G01C 22/00	W	

審査請求 未請求　請求項の数 7　OL　（全 9 頁）

(21)出願番号　特願2004-124640 (P2004-124640)
(22)出願日　平成16年4月20日 (2004.4.20)

(71)出願人　000002325
セイコーインスツル株式会社
千葉県千葉市美浜区中瀬１丁目８番地
(74)代理人　100079212
弁理士　松下　義治
(72)発明者　辻　智晴
千葉県千葉市美浜区中瀬１丁目８番地　セイコーインスツルメンツ株式会社内

Ｆターム(参考)　2F024 BA07

(54)【発明の名称】電子歩数計

(57)【要約】
【課題】　検出するのに十分な歩行信号が得られない場合でも、より正確な歩数計測を行えるようにすること。
【解決手段】　加速度センサ１００を有する加速度検出部１０１で検出した信号は、計数部１０２のフィルタ部１０５で一定のノイズが除去された後、歩行周期比較部１０６により、歩行周期演算部１０８で算出した移動平均値と比較されて、所定周期範囲内の各信号は１歩分の歩数として歩数カウント部１０７で計数される。前記所定周期範囲外の信号のうちの所定周期のｎ倍に類似する範囲の信号は、規定外歩数処理部１０９によってｎ歩分の歩数と判断され、歩数カウント部１０７はｎ歩分の歩数として計数する。歩数カウント部１０７で計数された歩数は表示部１０３で表示される。
【選択図】　図１

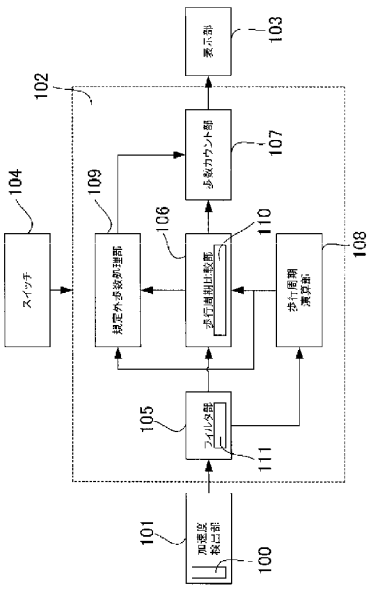

【特許請求の範囲】
【請求項１】
歩行センサを有し該歩行センサで検出した使用者の歩行に対応する歩行信号を出力する歩行検出手段と、前記歩行検出手段からの歩行信号に基づいて歩数を計数する計数手段とを有し、少なくとも前記歩行センサは使用者の身体に装着して使用される電子歩数計において、
前記計数手段は、前記歩行検出手段からの信号のうちの第１の基準周期範囲内の各信号を１歩分として計数すると共に、前記第１の周期範囲外の信号のうち、第２の基準周期範囲のｎ（正の整数）倍を基準とする所定範囲内にある信号をｎ歩分として計数することを特徴とする電子歩数計。
【請求項２】
前記計数手段は、前記歩行検出手段からの信号が前記第１の基準周期範囲内の信号か否かを判断する第１の周期判断手段と、前記歩行検出手段からの信号のうち、前記第１の周期判断手段が前記第１の基準周期範囲外と判断した信号が、前記第２の基準周期範囲のｎ倍を基準とする所定周期範囲内の信号か否かを判断する第２の周期判断手段と、前記歩行検出手段からの信号のうち、前記第１の基準周期判断手段が前記第１の基準周期範囲内の信号と判断した各信号を１歩分として計数すると共に、前記第２の基準周期判断手段が前記第２の基準周期範囲のｎ倍を基準とする所定周期範囲内の信号と判断した信号をｎ歩分として計数する歩数計数手段とを備えて成ることを特徴とする請求項１記載の電子歩数計。
【請求項３】
前記計数手段は前記歩行検出手段からの所定数の信号周期の移動平均をとる基準周期算出手段を有し、前記周期判断手段は、前記基準周期算出手段で算出した移動平均を基準とする所定範囲を前記第１の基準周期範囲として使用して、前記歩行検出手段からの信号が前記第１の基準周期範囲内の信号か否かを判断することを特徴とする請求項２記載の電子歩数計。
【請求項４】
前記第１の基準周期範囲を記憶する基準値記憶手段を備え、前記周期判断手段は、前記基準値記憶手段に記憶した第１の基準周期範囲を使用して、前記歩行検出手段からの信号が前記第１の基準周期範囲内の信号か否かを判断することを特徴とする請求項２記載の電子歩数計。
【請求項５】
前記基準値記憶手段に前記第１の基準周期範囲を記憶するための操作手段を備えて成ることを特徴とする請求項４記載の電子歩数計。
【請求項６】
前記第１の基準周期範囲と前記第２の基準周期範囲は同一であることを特徴とする請求項１乃至５のいずれか一に記載の電子歩数計。
【請求項７】
前記歩行センサは使用者の腕に装着して使用されることを特徴とする請求項１乃至６のいずれか一に記載の電子歩数計。
【発明の詳細な説明】
【技術分野】
【０００１】
本発明は、人体に装着して使用され、該装着した人の歩数を電子的に計数する電子歩数計に関する。
【背景技術】
【０００２】
従来から、人体に装着して使用され、電子的な処理を施すことによって使用者の歩数を計数する電子歩数計が開発されている。
【０００３】
歩数の計数は、歩行中の人体の上下運動による加速度を検出し、その回数を歩数として

計数するのが一般的である。

【０００４】

しかし、実際には歩行以外の生活動作による様々なノイズを拾ってしまい、歩数を正確に測定することが出来ないという問題点が以前から指摘されている。

【０００５】

これを解決するために、フィルタリング処理として一旦加速度を検出した後に所定の不感帯期間を設けノイズによる誤検出を回避する方法（例えば、特許文献１参照）、検出した所定回数連続して検出信号が出力したことを検出して、はじめてこれを歩数として計数する方法（例えば、特許文献２、特許文献３参照）、歩行の周期を検出し、その周期と歩行時間から歩数を演算する方法（例えば、特許文献４参照）等が提案されている。

【０００６】

図３は、前記特許文献１に記載された歩数計のブロック図である。歩数計は、使用者の身体に装着して使用されると共に使用者の歩行によって生じる加速度を検出して歩行に対応する信号（歩行信号）を出力する加速度検出部３０１、加速度検出部３０１の出力信号から歩行周期に対応する所定周期の信号を出力するフィルタ部３０２、フィルタ部３０２から出力された信号のうちの所定数の信号を平均することによって基準となる歩行周期を算出する歩行周期演算部３０６、フィルタ部３０２から出力された信号の周期と歩行周期演算部３０７で算出された基準となる歩行周期とを比較して、フィルタ部３０２から出力された信号のうち、前記基準となる歩行周期に類似する周期の信号を出力する歩行周期比較部３０３と、歩行周期比較部３０３からの信号を計数する歩数カウント部３０４、歩数カウント部３０４で計数した計数値を表示する表示部３０５を備えている。尚、フィルタ部３０２、歩行周期比較部３０３、歩数カウント部３０４、歩行周期演算部３０６は、中央処理装置（ＣＰＵ）と該ＣＰＵが実行するプログラムを格納した記憶部とによって構成することができる。

【０００７】

加速度検出部３０１は、歩行者の歩行によって生じる加速度を検出して歩行に対応する信号を出力する。フィルタ部３０２は、加速度検出部３０１の出力信号から歩行周期に対応する所定周期の信号を出力する。歩行周期演算部３０６は、フィルタ部３０２から出力された信号のうちの所定数の信号を平均することによって基準となる歩行周期を算出する。歩行周期比較部３０３は、フィルタ部３０２から出力された信号の周期と歩行周期演算部３０６で算出された基準となる歩行周期とを比較して、フィルタ部３０２から出力された信号のうち、前記基準となる歩行周期に類似する周期の信号を出力する。歩数カウント部３０４は、歩行周期比較部３０３からの信号を歩行に対応する信号として計数する。表示部３０５は、歩数カウント部３０４で計数した計数値である歩数を表示する。

【０００８】

このように、歩行周期比較部３０３が基準となる歩行周期に類似する周期で発生する信号を出力するように構成することによって、歩行周期に類似する期間以外で発生する信号は検出しないように、所定の不感帯期間を設けている。これにより、ノイズを歩行による信号と誤って検出することを回避することが可能になる。

【０００９】

図４は、前記従来の電子歩数計にける信号検出動作を説明するための信号波形図であり、加速度センサを使用者の腕に装着して歩数計測する方式の電子歩数計の例である。図４において、横軸は時間、縦軸は加速度検出部３０１で検出される加速度である。加速度信号波形と基準レベルＸとの交点位置（時間軸に示した矢印位置）が、検出された歩行を表している。加速度信号波形の周期はＴであり、加速度センサを腕に装着する方式であるため、１周期Ｔ当たり２歩検出される。

【００１０】

実際には歩行における上下運動の加速度だけを検出することは非常に困難であり、日常生活における歩行以外の動作や、歩行中の腕の振り方等の付帯動作の影響を受けるため、検出される加速度信号はこれらの合算となる。このため、検出レベルの揺らぎが生じて、

本来ならば検出されるべき歩行信号が検出されずに抜けてしまうという問題がある。即ち、図４において、本来ならば谷４０１～４０３は基準レベルＸの下方まで突出して基準レベルＸと交差し、交差点位置が歩数として計数されるはずであるが、検出レベルの揺らぎが生じて、検出されるべき歩行信号に抜けが発生しているため、計数漏れが生じてしまうという問題がある。

【特許文献１】特開昭５６－８６３０９号公報（第１頁～第２頁、図２～図４）
【特許文献２】特開昭６３－２６２７８４号公報（第２頁～第４頁、図４、図５）
【特許文献３】特許第３０１７５２９号公報（第２頁、図１～図４）
【特許文献４】特許第２６９７９１１号公報（第２頁、図１～図５）

【発明の開示】

【発明が解決しようとする課題】

【００１１】

本発明は、検出するのに十分な歩行信号が得られない場合でも、より正確な歩数計測を行えるようにすることを課題としている。

【課題を解決するための手段】

【００１２】

本発明によれば、歩行センサを有し該歩行センサで検出した使用者の歩行に対応する歩行信号を出力する歩行検出手段と、前記歩行検出手段からの歩行信号に基づいて歩数を計数する計数手段とを有し、少なくとも前記歩行センサは使用者の身体に装着して使用される電子歩数計において、前記計数手段は、前記歩行検出手段からの信号のうちの第１の基準周期範囲内の各信号を１歩分として計数すると共に、前記第１の周期範囲外の信号のうち、第２の基準周期範囲のｎ（正の整数）倍を基準とする所定範囲内にある信号をｎ歩分として計数することを特徴とする電子歩数計が提供される。

【００１３】

歩行検出手段は、使用者の歩行を検出して該歩行に対応する歩行信号を出力する。計数手段は、歩行検出手段からの信号のうちの第１の基準周期範囲内の各信号を１歩分として計数すると共に、前記第１の周期範囲外の信号のうち、第２の基準周期範囲のｎ（正の整数）倍を基準とする所定範囲内にある信号をｎ歩分として計数する。

【００１４】

ここで、前記計数手段は、前記歩行検出手段からの信号が前記第１の基準周期範囲内の信号か否かを判断する第１の周期判断手段と、前記歩行検出手段からの信号のうち、前記第１の周期判断手段が前記第１の基準周期範囲外と判断した信号が、前記第２の基準周期範囲のｎ倍を基準とする所定周期範囲内の信号か否かを判断する第２の周期判断手段と、前記歩行検出手段からの信号のうち、前記第１の基準周期判断手段が前記第１の基準周期範囲内の信号と判断した各信号を１歩分として計数すると共に、前記第２の基準周期判断手段が前記第２の基準周期範囲のｎ倍を基準とする所定周期範囲内の信号と判断した信号をｎ歩分として計数する歩数計数手段とを備えて成るように構成してもよい。

【００１５】

また、前記計数手段は前記歩行検出手段からの所定数の信号周期の移動平均をとる基準周期算出手段を有し、前記周期判断手段は、前記基準周期算出手段で算出した移動平均を基準とする所定範囲を前記第１の基準周期範囲として使用して、前記歩行検出手段からの信号が前記第１の基準周期範囲内の信号か否かを判断するように構成してもよい。

【００１６】

また、前記第１の基準周期範囲を記憶する基準値記憶手段を備え、前記周期判断手段は、前記基準値記憶手段に記憶した第１の基準周期範囲を使用して、前記歩行検出手段からの信号が前記第１の基準周期範囲内の信号か否かを判断するように構成してもよい。

【００１７】

また、前記基準値記憶手段に前記第１の基準周期範囲を記憶するための操作手段を備えて成るように構成してもよい。

【００１８】

また、前記第１の基準周期範囲と前記第２の基準周期範囲は同一であるように構成してもよい。

【００１９】

また、前記歩行センサは使用者の腕に装着して使用されるように構成してもよい。

【発明の効果】

【００２０】

本発明によれば、検出するのに十分な歩行信号が得られない場合でも、より正確な歩数計測を行うことが可能になる。

【発明を実施するための最良の形態】

【００２１】

以下、本発明の実施の形態に係る電子歩数計について図面を用いて説明する。

【００２２】

図１は、本発明の実施の形態に係る電子歩数計のブロック図である。

【００２３】

図１において、電子歩数計は、加速度センサによって構成された歩行センサ１００を有すると共に歩行センサ１００によって使用者の歩行（走行を含む。）を検出して該歩行に対応する信号（歩行信号）を出力する加速度検出部１０１、加速度検出部１０１からの歩行信号に基づいて使用者の歩数を計数する計数部１０２、液晶表示装置によって構成され計数部１０２で計数した歩数を表示する表示部１０３、計数部１０２の計数開始操作や終了操作、計数データのリセット操作、基準周期範囲の設定操作等の操作を行うための操作手段としてのスイッチ１０４を備えている。

【００２４】

計数部１０２は、中央処理装置（ＣＰＵ）と該ＣＰＵが実行するプログラムを格納した記憶部とによって構成することができる。

【００２５】

図１では、計数部１０２を機能的に表した機能ブロック図で示しており、計数部１０２は、加速度検出部１０１の出力信号中の歩行周期に対応する所定周期の信号を出力するフィルタ部１０５、フィルタ部１０５からの信号のうちの最新の所定数の信号周期の移動平均Ｔａをとることによって基準歩行周期を算出する歩行周期演算部１０８、前記基準歩行周期に基づく第１の基準周期範囲（本実施の形態では、Ｔａ±１０％）とフィルタ部１０５からの信号の周期とを比較して、フィルタ部１０５から出力された信号のうち、前記第１の基準周期範囲内の周期の信号を１歩分の歩数として歩数カウント部１０７に出力すると共に、フィルタ部１０５からの信号のうち、前記第１の基準周期範囲外の信号を規定外歩数処理部１０９に出力する歩行周期比較部１０６、前記基準歩行周期に基づく第２の基準周期範囲（本実施の形態では、ｎＴａ±１０％（ｎは正の整数））と歩行周期比較部１０６からの信号の周期とを比較して、歩行周期比較部１０６からの信号のうち、前記第２の基準周期範囲内の周期の信号をｎ歩分の歩数として歩数カウント部１０７に出力すると共に、前記第２の基準周期範囲外の周期の信号の場合にはノイズとして排除する規定外歩数処理部１０９、歩行周期比較部１０６及び規定外歩数処理部１０９から得られた歩数を現在の歩数に加算することによって歩数を計数する歩数カウント部１０７を備えている。

【００２６】

歩行周期比較部１０６は第２の基準周期記憶部１１１とともに基準周期記憶手段を構成する第１の基準記憶部１１０を有するように構成し、第１の基準周期記憶部１１０に予め前記第１の基準周期範囲を設定するようにすれば、歩行周期演算部１０８を省略することができる。この場合、前記第１の基準周期範囲は予め固定した一の値に固定されることになる。また、基準周期記憶部１１０に対する前記第１の基準周期範囲の設定は、スイッチ１０４によって行う。

【００２７】

フィルタ部１０５は基準周期記憶手段を構成する第２の基準周期記憶部１１１を有しており、基準周期記憶部１１１には、使用者が通常歩行する時の周期の変動範囲（第３の基

準周期範囲）が予め記憶されている。本実施の形態では、前記第３の基準周期範囲は、３３３ｍｓｅｃ（１８０ｒｐｍ）～１０００ｍｓｅｃの範囲に設定している。また、第２の基準周期記憶部１１１に対する前記第３の基準周期範囲の設定は、スイッチ１０４によって行う。

【００２８】

尚、加速度検出部１０１は歩行検出手段を、計数部１０２は計数手段を、表示部１０３は表示手段を、スイッチ１０４は操作手段を、歩行周期比較部１０６は第１の周期判断手段を、歩数カウント部１０７は歩数計数手段を、歩行周期演算部１０８は基準周期算出手段を、規定外歩数処理部１０９は第２の周期判断手段を各々構成している。

【００２９】

図２は、計数部１０２の処理を示すフローチャートである。

【００３０】

以下、図１、図２及び必要に応じて図４を参照して、本実施の形態に係る電子歩数計の動作を説明する。

【００３１】

先ず、使用者は歩数計測を行う準備として、電子歩数計を身体に装着する。このとき、加速度検出部１０１に含まれる加速度センサは腕に装着する。この状態で、使用者はスイッチ１０４を操作することによって電子歩数計に歩数計測動作を開始させると共に歩行を開始する。

【００３２】

加速度検出部１０１は使用者の歩行（走行を含む。）を検出して該歩行に対応する信号（歩行信号）を出力する。フィルタ部１０５は、加速度検出部１０１の出力信号の周期Ｔが、予め定めた歩行の基準周期範囲（前記第３の基準周期範囲）内の値か否かを判断する（ステップＳ２０１）。即ち、フィルタ部１０５は、加速度検出部１０１の出力信号の周期Ｔが、基準記憶部１１１に予め記憶した前記第３の基準周期範囲内に入るか否かを判断する。本実施の形態では、フィルタ部１０５は出力信号の周期Ｔが、３３３ｍｓｅｃ（１８０ｒｐｍ）＜Ｔ＜１０００ｍｓｅｃを満足するか否かを判断する。

【００３３】

フィルタ部１０５は、ステップＳ２０１において、前記周期Ｔが前記第３の基準周期範囲内でない場合には、ノイズと判断して、信号は出力しない（ステップ２０６）。フィルタ部１０５は、ステップＳ２０１において、前記周期Ｔが前記第３の基準周期範囲内である場合には、加速度検出部１０１からの信号が歩行信号であると判断して該信号を出力する。

【００３４】

次に、歩行周期比較部１０６は、フィルタ部１０５からの信号と、歩行周期演算部１０８によって算出された基準歩行周期に基づく前記第１の基準周期範囲とを比較することにより、フィルタ部１０５からの信号が前記基準歩行周期に類似するか否かを判断する（ステップＳ２０２）。

【００３５】

ここで、前記類似するか否かの判断基準としては、ノイズによる計数誤差を生じることが少なく且つ歩行信号を漏れが少なく計数可能な基準である。本実施の形態では、前記第１の基準周期範囲としてＴａ±１０％（Ｔａは、フィルタ部１０５から出力される最新の所定数の歩行の周期の移動平均値）としており、フィルタ部１０５からの信号が前記第１の基準周期範囲内のときは、前記基準歩行周期に類似すると判断するようにしている。

【００３６】

歩行周期比較部１０６は、ステップＳ２０２においてフィルタ部１０５からの信号が前記第１の基準周期範囲内と判断した場合には、歩行信号と判断して、歩数カウント部１０７に歩行信号を１歩分出力する。歩数カウント部１０７は、歩行周期比較部１０６からの歩行信号を計数して、今までの歩数計数値に１カウント加算し、表示部１０３に出力する（ステップＳ２０３）。表示部１０３には、今まで表示していた計数値に１カウント加算

した計数値が累積の歩数として表示される。

【００３７】

一方、歩行周期比較部１０６は、ステップＳ２０２においてフィルタ部１０５からの信号が前記第１の基準周期範囲外と判断した場合は、フィルタ部１０５からの信号を規定外歩数処理部１０９に出力する。

【００３８】

規定外歩数処理部１０９は、フィルタ部１０５からの信号と、歩行周期演算部１０８によって算出された基準歩行周期に基づく第２の基準周期範囲とを比較することにより、フィルタ部１０５からの信号が前記基準歩行周期のｎ倍（ｎは正の整数）に類似するか否かを判断する（ステップＳ２０４）。

【００３９】

ここで、前記類似するか否かの判断基準としては、ノイズによる計数誤差を生じることが少なく且つ歩行信号を漏れが少なく計数可能な基準である。本実施の形態では、前記第２の基準周期範囲として、前記移動平均Ｔａのｎ倍（ｎＴａ）±１０％としており、フィルタ部１０５からの信号が前記第２の基準周期範囲内のときは、前記基準歩行周期のｎ倍に類似すると判断するようにしている。

【００４０】

規定外歩数処理部１０９は、ステップＳ２０４においてフィルタ部１０５からの信号が前記基準歩行周期のｎ倍に類似すると判断した場合、即ち、フィルタ部１０５からの信号が前記第２の基準周期内と判断した場合には、フィルタ部１０５からの信号がｎ個の歩行信号であると判断して、歩数カウント部１０７に歩行信号をｎ歩分出力する。歩数カウント部１０７は、規定外歩数処理部１０９からのｎ歩分の歩行信号を計数して、今までの歩数計数値にｎカウント加算し、表示部１０３に出力する（ステップＳ２０５）。表示部１０３には、今まで表示していた計数値にｎカウント加算した計数値が累積の歩数として表示される。

【００４１】

規定外歩数処理部１０９は、ステップＳ２０４においてフィルタ部１０５からの信号が前記基準歩行周期のｎ倍に類似しないと判断した場合、即ち、フィルタ部１０５からの信号が前第２の基準範囲内にないと判断した場合には、フィルタ部１０５からの信号が歩行信号ではなくノイズであると判断して、歩数カウント部１０７には信号は出力しない（ステップ２０６）。

【００４２】

前記動作を繰り返すことにより、計数部１０２は、加速度検出部で検出した歩行信号に基づいて歩数の計数処理を行い、累積した歩数が表示部１０３に随時表示される。

【００４３】

使用者は歩数計測を終了する場合には、スイッチ１０４を操作することにより、計数部１０２の計数動作を停止させることができる。また、表示部１０３の表示をリセットする場合にもスイッチ１０４を操作することによって行うことができる。

【００４４】

以上のように、本実施の形態に係る電子歩数計は、歩行センサを有し該歩行センサで検出した使用者の歩行に対応する歩行信号を出力する加速度検出部１０１と、加速度検出部１０１からの歩行信号に基づいて歩数を計数する計数部１０２を有し、少なくとも前記歩行センサは使用者の腕等の身体に装着して使用される電子歩数計において、前記計数部１０２は、加速度検出部１０１からの信号のうちの第１の基準周期範囲内の各信号を１歩分として計数すると共に、前記第１の周期範囲外の信号のうち、第２の基準周期範囲のｎ（正の整数）倍を基準とする所定範囲内にある信号をｎ歩分として計数することを特徴としている。

【００４５】

したがって、図４の谷４０１～４０３のように検出するのに十分な歩行信号が得られない場合でも、加速度検出部１０１からの信号が第２の基準周期のｎ倍を基準とする所定範

囲（例えば、ｎＴａ±１０％の範囲）内にあれば、外乱等でその間の信号が検出されなかったとしても、ｎ歩分の歩数として計数するため、より正確な歩数計測を行うことが可能になる。

【００４６】

尚、前記実施の形態では、歩行センサとして加速度センサを使用したが、靴底に設けた圧力センサ等を使用してもよい。

【産業上の利用可能性】

【００４７】

歩数計の構成要素全てを使用者に装着して使用するように構成した電子歩数計や、一部の構成要素（少なくともセンサ）を使用者に装着すると共に他の構成要素を前記一部の構成要素と無線で信号の送受信を行うように構成し、前記他の構成要素は使用者から離れた場所に設けるようにした電子歩数計等にも適用可能である。また、歩行センサを腕以外の身体に装着するようにした電子歩数計にも適用可能である。

【図面の簡単な説明】

【００４８】

【図１】本発明の実施の形態に係る電子歩数計のブロック図である。

【図２】本発明の実施の形態の処理を説明するためのフローチャートである。

【図３】従来の電子歩数計のブロック図である。

【図４】従来の電子歩数計の動作を説明するための信号波形図である。

【符号の説明】

【００４９】

１００・・・歩行センサ
１０１・・・歩行検出手段としての加速度検出部
１０２・・・計数手段としての計数部
１０３・・・表示手段としての表示部
１０４・・・操作手段としてのスイッチ
１０５・・・フィルタ部
１０６・・・第１の周期判断手段としての歩行周期比較部
１０７・・・歩数計数手段としての歩数カウント部
１０８・・・基準周期算出手段としての歩行周期演算部
１０９・・・第２の周期判断手段としての規定外歩数処理部
１１０・・・基準値記憶手段としての基準値記憶部
１１１・・・基準周期記憶部

【図１】

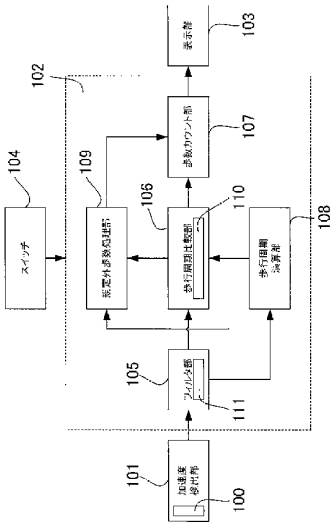

表示部
103
102
歩数カウント部
107
104
109
106
110
108
スイッチ
歩行周期比較部
歩行周期演算部
105
フィルタ部
111
101
加速度検出部
100

【図２】

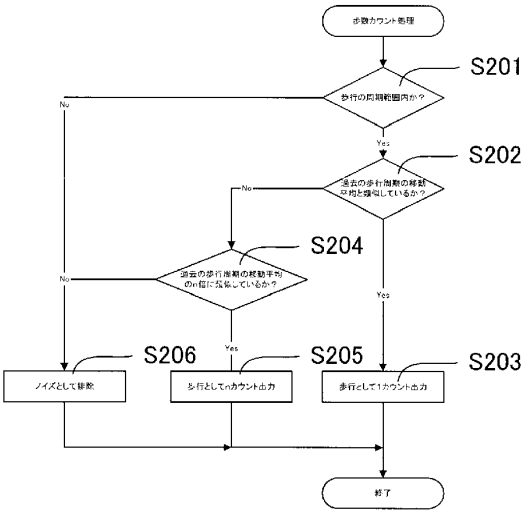

歩数カウント処理
S201
歩行の周期範囲内か？
No
Yes
S202
過去の歩行周期の移動平均と類似しているか？
No
S204
過去の歩行周期の移動平均のn倍に変化しているか？
No
Yes
Yes
S206
S205
S203
ノイズとして排除
歩行としてnカウント出力
歩行として1カウント出力
終了

【図３】

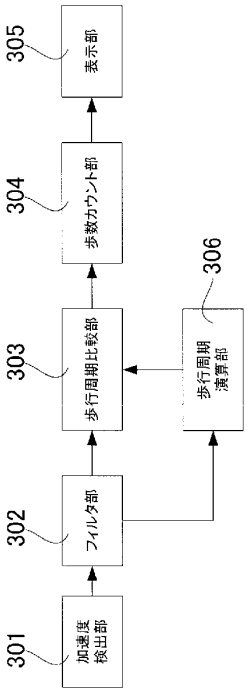

305
表示部
304
歩数カウント部
306
303
歩行周期比較部
歩行周期演算部
302
フィルタ部
301
加速度検出部

【図４】

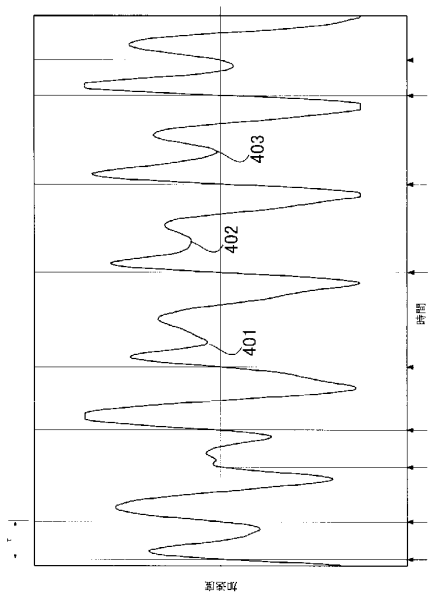

403
402
401
時間
加速度

UNITED STATES PATENT AND TRADEMARK OFFICE

UNITED STATES DEPARTMENT OF COMMERCE
United States Patent and Trademark Office
Address: COMMISSIONER FOR PATENTS
P.O. Box 1450
Alexandria, Virginia 22313-1450
www.uspto.gov

BIB DATA SHEET

CONFIRMATION NO. 8340

SERIAL NUMBER	FILING or 371(c) DATE RULE	CLASS	GROUP ART UNIT	ATTORNEY DOCKET NO.
13/018,321	01/31/2011	702	2857	8689P027C2

APPLICANTS

Philippe Kahn, Aptos, CA;
Arthur Kinsolving, Santa Cruz, CA;
Mark Andrew Christensen, Santa Cruz, CA;
Brian Y. Lee, Aptos, CA;
David Vogel, Santa Cruz, CA;

**** CONTINUING DATA **************************

This application is a CON of 12/694,135 01/26/2010 PAT 7,881,902
which is a CON of 11/644,455 12/22/2006 PAT 7,653,508 OK /ERC/

**** FOREIGN APPLICATIONS ************************** NONE /ERC/

**** IF REQUIRED, FOREIGN FILING LICENSE GRANTED ****

03/02/2011

Foreign Priority claimed ☐ Yes ☑ No 35 USC 119(a-d) conditions met ☐ Yes ☑ No Verified and Acknowledged /EDWARD R COSIMANO/ Examiner's Signature	☐ Met after Allowance Initials	STATE OR COUNTRY	SHEETS DRAWINGS	TOTAL CLAIMS	INDEPENDENT CLAIMS
		CA	9	20	4

ADDRESS

BLAKELY SOKOLOFF TAYLOR & ZAFMAN LLP
1279 OAKMEAD PARKWAY
SUNNYVALE, CA 94085-4040
UNITED STATES

TITLE

Human Activity Monitoring Device

FILING FEE RECEIVED		
1310	FEES: Authority has been given in Paper No._____ to charge/credit DEPOSIT ACCOUNT No._____ for following:	☐ All Fees ☐ 1.16 Fees (Filing) ☐ 1.17 Fees (Processing Ext. of time) ☐ 1.18 Fees (Issue) ☐ Other _____ ☐ Credit

BIB (Rev. 05/07).

1. NOTICE OF ALLOWANCE VACATED PROSECUTION ON THE MERITS IS REOPENED

1.1 Prosecution on the merits of this application is reopened on claims 1-20, which are considered unpatentable for the reasons indicated below in the following Office action.

1.2 Applicant is advised that the Notice of Allowance mailed 27 January 2012 is vacated. If the issue fee has already been paid, applicant may request a refund or request that the fee be credited to a deposit account. However, applicant may wait until the application is either found allowable or held abandoned. If allowed, upon receipt of a new Notice of Allowance, applicant may request that the previously submitted issue fee be applied. If abandoned, applicant may request refund or credit to a specified Deposit Account.

2. EXAMINER'S COMMENT

2.1 When preparing this Office action the Examiner considers the instant application to include:

A) the copy of the Oath/Declaration from grandparent application serial number 11/644,455 which was filed on 31 January 2011 and that is acceptable to the Examiner;

B) the content of the Abstract which was filed on 31 August 2011 and that is acceptable to the Examiner;

C) figures 1, 2, 3, 4, 5, 6, 7, 8 & 9 of the set of drawings containing 9 sheets of 9 figures comprising figures 1, 2, 3, 4, 5, 6, 7, 8 & 9 as presented in the set of drawings filed on 31 January 2011 where the content of figures 3, 4, 5, 6, 7, 8 & 9 of the above set of drawings is acceptable to the Examiner;

D) the written description as filed on 31 January 2011 and amended on 09 January 2012;

E) the set of claims as filed on 31 January 2011; and

F) the NON-Publication request filed on 31 January 2011.

3. BENEFIT OF AN EARLIER FILING DATE

3.1 Applicant's claim for the benefit of an earlier filing date pursuant to 35 U.S.C. 120 is acknowledged.

4. PRIOR ART FROM EARLIER APPLICATIONS

4.1 The Examiner has considered the prior art cited in the applications for which Applicant has claimed the benefit of an earlier filing date pursuant to 35 U.S.C. 120.

4.1.1 If Applicant wishes any of the prior art that was cited in each of the base applications but that has not been cited during the prosecution of the instant application to appear on any Patent granted on the instant application, then Applicant must provide a properly completed PTO-1449 containing proper citations of the prior art that Applicant wishes to appear on any Patent that may be granted on the instant application.

5. INFORMATION DISCLOSURE STATEMENT (IDS)

5.1 The Examiner notes that each of the documents that have been crossed off each IDS that was filed on 16 May 2011 have been crossed off because each of these documents are duplicate of a citation of the same document which has been cited on the IDS filed 31 January 2011 and that has been considered by the Examiner.

5.2 The IDS filed on 09 January 2012 fails to comply with the provisions of 37 CFR 1.97 and MPEP § 609 because:

A) it fails to comply with 37 CFR 1.97(d) because it lacks a statement as specified in 37 CFR 1.97(e); and

It has been placed in the application file, but the information referred to therein has not been considered as to the merits. Applicant is advised that the date of any re-submission of any item of information contained in this information disclosure statement or the submission of any missing element(s) will be the date of submission for purposes of determining compliance with the requirements based on the time of filing the statement, including all certification requirements for statements under 37 CFR 1.97(e). See MPEP § 609.05(a).

5.2.1 In regard to the IDS filed on 09 January 2012, the Examiner notes that in view of the Ex Parte Quayle action mailed on 08 November 2011 that closed prosecution on the merits, the IDS must be submitted pursuant to 37 CFR 1.97(d) and not 37 CFR 1.97(c) as set forth by Applicant in the IDS transmittal letter. Further pursuant to 37 CFR 1.97(d) while the IDS submission lacks the required certification statement, see 37 CFR 1.97(e), the IDS submission does include the required fee.

6. DOUBLE PATENTING UNDER 35 U.S.C. 101

6.1 The nonstatutory double patenting rejection is based on a judicially created doctrine grounded in public policy (a policy reflected in the statute) so as to prevent the unjustified or improper timewise extension of the "right to exclude" granted by a patent and to prevent possible harassment by multiple assignees. A nonstatutory obviousness-type double patenting rejection is appropriate where the conflicting claims are not identical, but at least one examined application claim is not patentably distinct from the reference claim(s) because the examined application claim is either anticipated by, or would have been obvious over, the reference claim(s). See, e.g.,

In re Berg, 140 F.3d 1428, 46 USPQ2d 1226 (Fed. Cir., 1998); *In re Goodman*, 11 F.3d 1046, 29 USPQ2d 2010 (Fed. Cir., 1993); *In re Longi*, 759 F.2d 887, 225 USPQ 645 (Fed. Cir., 1985); *In re Van Ornum*, 686 F.2d 937, 214 USPQ 761 (CCPA, 1982); *In re Vogel*, 422 F.2d 438, 164 USPQ 619 (CCPA, 1970); and *In re Thorington*, 418 F.2d 528, 163 USPQ 644 (CCPA, 1969).

6.1.1 A timely filed terminal disclaimer in compliance with 37 CFR 1.321(c) or 1.321(d) may be used to overcome an actual or provisional rejection based on a nonstatutory double patenting ground provided the conflicting application or patent either is shown to be commonly owned with this application, or claims an invention made as a result of activities undertaken within the scope of a joint research agreement.

6.1.2 Effective January 1, 1994, a registered attorney or agent of record may sign a terminal disclaimer. A terminal disclaimer signed by the assignee must fully comply with 37 CFR 3.73(b).

6.2 OBVIOUS DOUBLE PATENTING

6.2.1 Claims 1-5 & 11-20 are rejected on the ground of nonstatutory obviousness-type double patenting as being unpatentable over claims 1-5 & 11-14 of U.S. Patent No. 7,653,508.

6.2.1.1 Although the conflicting claims are not identical, they are not patentably distinct from each other because one of ordinary skill at the time the invention was made would have fairly and reasonably recognized that both sets of claims recite the same subject matter of:

"assigning a dominant axis based on an orientation of the inertial sensor";

"detecting a change in the orientation of the inertial sensor and updating the dominant axis based on the change"; and

"counting periodic human motions by monitoring accelerations relative to the dominant axis based upon acceleration measurements along only the dominant axis to count steps".

However, one of ordinary skill at the time the invention was made would have fairly and reasonably recognized that claims 1-5 & 11-14 of U.S. Patent No. 7,653,508 recite that the function of "detecting a change in the orientation of the inertial sensor and updating the dominant axis based on the change" is to be continuously performed, whereas claims 1-5 & 11-20 of the instant application do not require this function to be continuously performed.

6.2.1.2 One of ordinary skill at the time the invention was made would have fairly and reasonably recognized that the scope of claims 1-5 & 11-20 of the instant application would include embodiments in which the function of "detecting a change in the orientation of the inertial sensor and updating the dominant axis based on the change" is continuously performed as well as embodiments in which the function of "detecting a change in the orientation of the inertial sensor and updating the dominant axis based on the change" is periodically performed.

6.2.1.3 Since one of ordinary skill at the time the invention was made would have fairly and reasonably recognized that:

A) the scope of claims 1-5 & 11-20 of the instant application would include embodiments in which the function of "detecting a change in the orientation of the inertial sensor and updating the dominant axis based on the change" is continuously performed as recited in claims 1-5 & 11-14 of U.S. Patent No. 7,653,508; and

B) Applicant has not defined or limited what is meant by the word "continuous" as used in claims 1-5 & 11-14 of U.S. Patent No. 7,653,508;

then one of ordinary skill at the time the invention was made would have fairly and reasonably recognized that claims 1-5 & 11-20 of the instant application are an obvious variation of the invention recited in claims 1-5 & 11-14 of U.S. Patent No. 7,653,508.

6.2.1.4 In regard to the invention of claims 15-20 of the instant application and claims 1-5 & 11-14 of U.S. Patent No. 7,653,508, it is noted that one of ordinary skill at the time the invention was made would have fairly and reasonably recognized that the invention of claims 1-5 & 11-14 of U.S. Patent No. 7,653,508 require the media of claims 1-5 & 11-20 of the instant application and hence claims 1-5 & 11-20 of the instant application are an obvious variation of the invention recited in claims 1-5 & 11-14 of U.S. Patent No. 7,653,508.

6.2.2 Claims 6-10 are rejected on the ground of nonstatutory obviousness-type double patenting as being unpatentable over claims 6-10 & 15-20 of U.S. Patent No. 7,653,508.

6.2.2.1 Although the conflicting claims are not identical, they are not patentably distinct from each other because one of ordinary skill at the time the invention was made would have fairly and reasonably recognized that both sets of claims recite the same subject matter of:

"buffering a plurality of periodic human motions";

"identifying a number of periodic human motions within appropriate cadence windows"; and

"counting each of the periodic human motions to enable the monitoring of human activity".

However, one of ordinary skill at the time the invention was made would have fairly and reasonably recognized that claims 6-10 & 15-20 of U.S. Patent No. 7,653,508 recite that the function of "identifying a number of periodic human motions within appropriate cadence windows" is to be performed by a "switching device" in claims 6-10 and "mode logic" in claims 15-20, whereas claims 6-10 of the instant application do not require the use of either of these devices when performing this function.

6.2.2.2 One of ordinary skill at the time the invention was made would have fairly and reasonably recognized that the scope of claims 6-10 of the instant application would include embodiments in which the function of "identifying a number of periodic human motions within appropriate cadence windows" could be performed by any suitable device such as the "switching device" recited in claims 6-10 of U.S. Patent No. 7,653,508 or the "mode logic" in claims 15-20 of U.S. Patent No. 7,653,508.

6.2.2.3 Since one of ordinary skill at the time the invention was made would have fairly and reasonably recognized that:

A) the scope of claims 6-10 of the instant application would include embodiments in which the function of "identifying a number of periodic human motions within appropriate cadence windows" is performed:

(1) as recited in claims 6-10 & 15-20 of U.S. Patent No. 7,653,508; or

(2) by using any suitable structure/action that could "identifying a number of periodic human motions within appropriate cadence windows";

then one of ordinary skill at the time the invention was made would have fairly and reasonably recognized that claims 6-10 of the instant application are an obvious variation of the invention recited in claims 6-10 & 15-20 of U.S. Patent No. 7,653,508.

7. REJECTIONS UNDER 35 U.S.C. 102

7.1 The following is a quotation of the appropriate paragraphs of 35 U.S.C. 102 that form the basis for the rejections under this section made in this Office action:

A person shall be entitled to a patent unless –

(b) the invention was patented or described in a printed publication in this or a foreign country or in public use or on sale in this country, more than one year prior to the date of application for patent in the United States.

(e) the invention was described in (1) an application for patent, published under section 122(b), by another filed in the United States before the invention by the Applicant for patent or (2) a patent granted on an application for patent by another filed in the United States before the invention by the Applicant for patent, except that an international application filed under the treaty defined in section 351(a) shall have the effects for purposes of this subsection of an application filed in the United States only if the international application designated the United States and was published under Article 21(2) of such treaty in the English language.

7.1.1 Claims 1-2, 11-12 & 14-16 are rejected under 35 U.S.C. 102(e) as being anticipated by Pasolini et al (2007/0143068).

7.1.1.1 THE PRIOR ART RELATIVE TO THE CLAIMED INVENTION

7.1.1.1.1 In regard to claims 1-2, 11-12 & 14-16, as one of ordinary skill at the time the invention was made would have fairly and reasonably interpreted the apparent and non-complex teachings or suggestions of Pasolini et al ('068), for all that the prior art document would teach or suggest one of ordinary skill at the time the invention was made, In re BODE et al, 193 USPQ 12 at 17 (CCPA, 1977), with some reliance on the knowledge of one of ordinary skill at the time the invention was made, In re BODE et al, 193 USPQ 12 at 16 (CCPA, 1977), within the environment of monitoring and counting human activity as disclosing a single computer implemented machine/process that while under the control of a suitable operating program/system stored within or on a computer readable/accessible media/medium provides the useful and beneficial function of monitoring and counting human activity.

7.1.1.1.2 In view of the above, one of ordinary skill at the time the invention was made would have fairly and reasonably interpreted the apparent and non-complex teachings or suggestions of Pasolini et al ('068), in at least paragraph numbers 23, 25, 27, 35, 42 & 56, as teaching or suggesting a machine/process that performs in regard to claims 1-2, 11-12 & 14-16 the claimed functions of:

"assigning a dominant axis based on an orientation of the inertial sensor";

"detecting a change in the orientation of the inertial sensor and updating the dominant axis based on the change"; and

"counting periodic human motions by monitoring accelerations relative to the dominant axis based upon acceleration measurements along only the dominant axis to count steps";

because it is noted that one of ordinary skill at the time the invention was made would have fairly and reasonably recognized that Pasolini et al ('068) teaches or suggests a machine/process that performs each of these functions when teaching or suggesting a computer implemented machine/process that while under the control of a suitable operating program/system stored within or on a computer readable/accessible media/medium provides the useful and beneficial function of monitoring and counting human activity. To monitor human activity, a suitable sensor is used in order to sense and monitor the one or more accelerations that are produced by the one or more motions of human activity along a vertical detection of dominate axis of the sensor. The acceleration signals that are produced by the sensor are then suitably processed by being analyzed or evaluated against one or more suitable criteria in order to detect a suitable variation of the amplitude/magnitude or pattern or signature of the sensor signal from the sensor that represents a human motion such as a step. Once a step has been detected, a step count is incremented in order to count the number of time that a human activity has been detected. Where one of ordinary skill at the time the invention was made would have fairly and reasonably recognized that changes in the orientation of the sensor would affect the which axis is the vertical detection or dominate axis, then Pasolini et al ('068) teach or suggest that the orientation of the sensor must be determined in order to use the correct axis as the vertical detection or dominate axis of the sensor.

7.1.1.1.3 Using the same analysis and reasoning, then one of ordinary skill at the time the invention was made would have fairly and reasonably also recognized that Pasolini et al ('068), in at least paragraph numbers 23, 25, 27, 35, 42 & 56, teaches or suggests a machine/process that performs the functions of the actions of the process of claim 2 or the structures of the machine of claims 12, 14 & 16.

7.1.1.1.4 It is further noted that one of ordinary skill at the time the invention was made would have fairly and reasonably recognized that the operating program which is stored within the computer accessible memory of the machine/process of Pasolini et al ('068) that is used in order to control the operation of the machine/process of Pasolini et al ('068) is the invention of claims 15-16.

7.1.1.1.5 CONCLUSION

7.1.1.1.5.1 In view of the above, one of ordinary skill at the time the invention was made would have fairly and reasonably recognized that scope of the claimed invention would include subject matter that is taught or suggested by Pasolini et al ('068) and therefore the invention of claims 1-2, 11-12 & 14-16 is rendered to be anticipated by the teachings or suggestions of Pasolini et al ('068).

7.1.2 Claims 6-10 are rejected under 35 U.S.C. 102(b) as being anticipated by Darley (6,611,789).

7.1.2.1 THE PRIOR ART RELATIVE TO THE CLAIMED INVENTION

7.1.2.1.1 In regard to claims 6-10, as one of ordinary skill at the time the invention was made would have fairly and reasonably interpreted the apparent and non-complex teachings or suggestions of Darley ('789), for all that the prior art document would teach or suggest one of ordinary skill at the time the invention was made, In re BODE et al, 193 USPQ 12 at 17 (CCPA, 1977), with some reliance on the knowledge of one of ordinary skill at the time the invention was made, In re BODE et al, 193 USPQ 12 at 16 (CCPA, 1977), within the environment of monitoring and counting human activity as disclosing a single computer implemented

machine/process that while under the control of a suitable operating program/system stored within or on a computer readable/accessible media/medium provides the useful and beneficial function of monitoring and counting human activity.

7.1.2.1.2 In view of the above, one of ordinary skill at the time the invention was made would have fairly and reasonably interpreted the apparent and non-complex teachings or suggestions of Darley ('789), in at least columns 20, 26, 29, 37 & 48, as teaching or suggesting a machine/process that performs in regard to claims 6-10 the claimed functions of:

"buffering a plurality of periodic human motions";

"identifying a number of periodic human motions within appropriate cadence windows"; and

"counting each of the periodic human motions to enable the monitoring of human activity";

because it is noted that one of ordinary skill at the time the invention was made would have fairly and reasonably recognized that Darley ('789) disclose a computer implemented machine/process that while under the control of a suitable operating program/system stored within or on a computer readable/accessible media/medium provides the useful and beneficial function of monitoring and counting human activity. To monitor human activity, a suitable sensor is used in order to sense and monitor the one or more accelerations that are produced by the one or more motions of human activity. The acceleration signals that are produced by the sensor are then suitably processed by being analyzed or evaluated in order to detect a suitable variation of the amplitude/magnitude or pattern or signature of the sensor signal from the sensor that represents a human motion such as a step. Once a step has been detected, a step count is incremented in order to count the number of time that a human activity has been detected. Whereas further taught or suggest by Darley ('789) when a step has not detected within a predetermined period or interval or duration of time, i.e. "cadence window" then a sleep mode, i.e. "inactive mode" or "non-active mode" is initialed until a qualifying acceleration and hence step has been detected and the monitor wakes up.

7.1.2.1.3 Using the same analysis and reasoning, then one of ordinary skill at the time the invention was made would have fairly and reasonably also recognized that Darley ('789) teaches or suggests a machine/process that performs the functions of the actions of the process of claims 7-10.

7.1.2.2 CONCLUSION

7.1.2.2.1 In view of the above, one of ordinary skill at the time the invention was made would have fairly and reasonably recognized that scope of the claimed invention would include subject matter that is taught or suggested by Darley ('789) and therefore the invention of claims 6-10 is rendered to be anticipated by the teachings or suggestions of Darley ('789).

8. REJECTIONS UNDER 35 U.S.C. 103

8.1 The following is a quotation of 35 U.S.C. 103(a) which forms the basis for all obviousness rejections set forth in this Office action:

(a) A patent may not be obtained though the invention is not identically disclosed or described as set forth in section 102 of this title, if the differences between the subject matter sought to be patented and the prior art are such that the subject matter as a whole would have been obvious at the time the invention was made to a person having ordinary skill in the art to which said subject matter pertains. Patentability shall not be negatived by the manner in which the invention was made.

The factual inquiries set forth in *Graham* v. *John Deere Co.*, 383 U.S. 1, 148 USPQ 459 (1966), that are applied for establishing a background for determining obviousness under 35 U.S.C. 103(a) are summarized as follows:

1. Determining the scope and contents of the prior art.

2. Ascertaining the differences between the prior art and the claims at issue.

3. Resolving the level of ordinary skill in the pertinent art.

4. Considering objective evidence present in the application indicating obviousness or nonobviousness.

8.1.1 Claim 20 is rejected under 35 U.S.C. 103(a) as being unpatentable over Pasolini et al (2007/0143068) as applied above to claim 15 and further in view of Darley (6,611,789) as applied above to claims 6-10.

8.1.1.1 THE PRIOR ART RELATIVE TO THE CLAIMED INVENTION

8.1.1.1.1 In regard to claim 20, as one of ordinary skill at the time the invention was made would have fairly and reasonably interpreted the apparent and non-complex teachings or suggestions of Pasolini et al ('068), for all that the prior art document would teach or suggest one of ordinary skill at the time the invention was made, In re BODE et al, 193 USPQ 12 at 17 (CCPA, 1977), with some reliance on the knowledge of one of ordinary skill at the time the invention was made, In re BODE et al, 193 USPQ 12 at 16 (CCPA, 1977), within the environment of monitoring and counting human activity as disclosing a single computer implemented machine/process that while under the control of a suitable operating program/system stored within or on a computer readable/accessible media/medium provides the useful and beneficial function of monitoring and counting human activity.

8.1.1.1.2 In view of the above, one of ordinary skill at the time the invention was made would have fairly and reasonably interpreted the apparent and non-complex teachings or suggestions of Pasolini et al ('068), in at least paragraph numbers 23, 25, 27, 35, 42 & 56, as teaching or suggesting a machine/process that performs in regard to claim 15 the claimed functions of:

"assigning a dominant axis based on an orientation of the inertial sensor";

"detecting a change in the orientation of the inertial sensor and updating the dominant axis based on the change"; and

"counting periodic human motions by monitoring accelerations relative to the dominant axis based upon acceleration measurements along only the dominant axis to count steps";

because it is noted that one of ordinary skill at the time the invention was made would have fairly and reasonably recognized that Pasolini et al ('068) teaches or suggests a machine/process that performs each of these functions when teaching or suggesting disclose a computer implemented machine/process that while under the control of a suitable operating program/system stored

within or on a computer readable/accessible media/medium provides the useful and beneficial function of monitoring and counting human activity. To monitor human activity, a suitable sensor is used in order to sense and monitor the one or more accelerations that are produced by the one or more motions of human activity along a vertical detection of dominate axis of the sensor. The acceleration signals that are produced by the sensor are then suitably processed by being analyzed or evaluated against one or more suitable criteria in order to detect a suitable variation of the amplitude/magnitude or pattern or signature of the sensor signal from the sensor that represents a human motion such as a step. Once a step has been detected, a step count is incremented in order to count the number of time that a human activity has been detected. Where one of ordinary skill at the time the invention was made would have fairly and reasonably recognized that changes in the orientation of the sensor would affect the which axis is the vertical detection or dominate axis, then Pasolini et al ('068) teach or suggest that the orientation of the sensor must be determined in order to use the correct axis as the vertical detection or dominate axis of the sensor.

8.1.1.1.3 Further, in view of the above, one of ordinary skill at the time the invention was made would have fairly and reasonably interpreted the apparent and non-complex teachings or suggestions of Pasolini et al ('068) that Pasolini et al ('068) does not teach or suggest a machine/process that performs in regard to claim 15 the claimed functions of "switching the device from an active mode to a non-active mode when a number of expected periodic human motions are not identified in the appropriate cadence windows".

8.1.1.1.4 However, in regard to claim 20, as one of ordinary skill at the time the invention was made would have fairly and reasonably interpreted the apparent and non-complex teachings or suggestions of Darley ('789), for all that the prior art document would teach or suggest one of ordinary skill at the time the invention was made, In re BODE et al, 193 USPQ 12 at 17 (CCPA, 1977), with some reliance on the knowledge of one of ordinary skill at the time the invention was made, In re BODE et al, 193 USPQ 12 at 16 (CCPA, 1977), within the environment of monitoring and counting human activity as disclosing a single computer implemented machine/process that while under the control of a suitable operating program/system stored

within or on a computer readable/accessible media/medium provides the useful and beneficial function of monitoring and counting human activity.

8.1.1.1.5 One of ordinary skill at the time the invention was made would have fairly and reasonably interpreted the apparent and non-complex teachings or suggestions of Darley ('789), in at least columns 20, 26, 29, 37 & 48, as teaching or suggesting a computer implemented machine/process that while under the control of a suitable operating program/system stored within or on a computer readable/accessible media/medium provides the useful and beneficial function of monitoring and counting human activity. To monitor human activity, a suitable sensor is used in order to sense and monitor the one or more accelerations that are produced by the one or more motions of human activity. The acceleration signals that are produced by the sensor are then suitably processed by being analyzed or evaluated in order to detect a suitable variation of the amplitude/magnitude or pattern or signature of the sensor signal from the sensor that represents a human motion such as a step. Once a step has been detected, a step count is incremented in order to count the number of time that a human activity has been detected. Whereas to conserve power during intervals of inactivity as further taught or suggest by Darley ('789) when a step has not detected within a predetermined period or interval or duration of time, i.e. "cadence window" then a sleep mode, i.e. "inactive mode" or "non-active mode" is initialed until a qualifying acceleration and hence step has been detected and the monitor wakes up.

8.1.1.1.6 In view of the above then one of ordinary skill at the time the invention was made would have fairly and reasonably recognized that the machine/process of Pasolini et al ('068) could be modified to enter an inactive mode so as to conserve power until needed as taught or suggested of Darley ('789).

8.1.1.1.7 It is further noted that one of ordinary skill at the time the invention was made would have fairly and reasonably recognized that the operating program which is stored within the computer accessible memory of the machine/process of Pasolini et al ('068) as modified by the teachings or suggestions of Darley ('789) that is used in order to control the operation of the

machine/process of Pasolini et al ('068) as modified by the teachings or suggestions of Darley ('789) is the invention of claim 20.

8.1.1.1.8 CONCLUSION

8.1.1.1.8.1 In view of the above, one of ordinary skill at the time the invention was made would have fairly and reasonably recognized that scope of the claimed invention would include subject matter that is taught or suggested by Pasolini et al ('068) as modified by the teachings or suggestions of Darley ('789) and therefore the invention of claim 20 is rendered to be obvious in view of the teachings or suggestions of Pasolini et al ('068) as modified by the teachings or suggestions of Darley('789).

9. REJECTIONS UNDER 35 U.S.C. 112 2nd PARAGRAPH

9.1 The following is a quotation of the second paragraph of 35 U.S.C. 112:

The specification shall conclude with one or more claims particularly pointing out and distinctly claiming the subject matter which the Applicant regards as his invention.

9.1.1 Claims 1-5 & 11-20 are rejected under 35 U.S.C. 112, second paragraph, as being indefinite for failing to particularly point out and distinctly claim the subject matter which Applicant regards as the invention.

9.1.1.1 In regard to claims 1-5 & 11-20, one of ordinary skill at the time the invention was made would have fairly and reasonably found these claims to be unclear, vague, confusing and indefinite.

9.1.1.1.1 In regard to claims 1, 11 & 15, it is noted that as one of ordinary skill at the time the invention was made would have fairly and reasonably interpreted the language that has been used by Applicant in order to set forth or define the claimed invention, then one of ordinary skill at the time the invention was made would have fairly and reasonably recognized that:

A) the "dominant axis" of the sensor is assigned based upon the orientation of an inertial sensor; and

B) the language that has been used by Applicant in order to set forth or define the claimed invention DOES NOT RECITE the use of any particular reference direction that is to be used in order to consistently and repeatedly determine the orientation of an inertial sensor.

9.1.1.1.2 Further, as one of ordinary skill at the time the invention was made would have fairly and reasonably recognized that in order to consistently and repeatedly determine the orientation of an inertial sensor then the orientation of an inertial sensor must be determined relative to a particular direction.

9.1.1.1.3 In view of the above, then one of ordinary skill at the time the invention was made would have been fairly and reasonably confused by how the claimed invention would consistently and repeatedly determine the orientation of an inertial sensor so that the "dominant axis" of the sensor may be assigned as envisioned by Applicant.

9.1.1.1.4 For the above reasons Applicant has failed to particularly and distinctly point out what is regarded as the invention. Claims not explicitly mentioned above, inherent each the described problems through dependency to the explicitly mentioned base claim.

10. RESPONSE TO APPLICANT'S ARGUMENTS

10.1 The objections and/or rejections that have not been repeated here in have been overcome by Applicant's last response.

11. REASONS FOR ALLOWANCE

11.1 The following is a statement of reasons for the indication of allowable subject matter over the prior art, where:

A) for example:

(1) either Smith et al (5,485,402) or Richardson et al (5,976,083 or 6,135,951) or Ebeling et al (6,145,389) or Sakuria et al (6,369,794) or Kubo et al (2002/0089425 or 6,700,499) or Ladetto et al (2003/0018430 or 6,826,477) or Darley (6,611,789 or 2007/0061105 or 2007/0208531 or 7,428,471 or 7,617,071 or 2010/0057398 or 7,962,312) or Tsuji (2005/0232388

or 2005/0238132 or JP 2005-309691 A or 7,169,084 or 7,297,088) or Seo et al (2006/0020177 or 7,334,472) or Skvortsov et al (2006/0174685 or 7,305,323) or Park et al (2007/0067094 or 7,640,134) or Pasolini et al (2007/0143068 or 7,463,997) or Kato et al (2008/0243432) disclose a computer implemented machine/process that while under the control of a suitable operating program/system stored within or on a computer readable/accessible media/medium provides the useful and beneficial function of monitoring and counting human activity. To monitor human activity, a suitable sensor is used in order to sense and monitor the one or more accelerations that are produced by the one or more motions of human activity. The acceleration signals that are produced by the sensor are then suitably processed by being analyzed or evaluated in order to detect a suitable variation of the amplitude/magnitude or pattern or signature of the sensor signal from the sensor that represents a human motion such as a step. Once a step has been detected, a step count is incremented in order to count the number of time that a human activity has been detected. Whereas further taught or suggest by at least:

(a) Smith et al (5,485,402) the count represents the number of human actions that have occurred within a measured time interval;

(b) either Richardson et al (5,976,083 or 6,135,951) or Ebeling et al (6,145,389) the count representing the number of human action is used in order to determine a distance that has been traveled by the human;

(c) either Sakuria et al (6,369,794) or Kubo et al (2002/0089425 or 6,700,499) or Ladetto et al (2003/0018430 or 6,826,477) or Park et al (2007/0067094 or 7,640,134) the variations in the sensor signal are variation over a period or interval or duration of time;

(d) either Kubo et al (2002/0089425 or 6,700,499) or Ladetto et al (2003/0018430 or 6,826,477) or Darley (6,611,789 or 2007/0061105 or 2007/0208531 or 7,428,471 or 7,617,071 or 2010/0057398 or 7,962,312) or Park et al (2007/0067094 or 7,640,134) or Pasolini et al (2007/0143068 or 7,463,997) the sensor signal is taken from an axis of the sensor;

(e) Darley (6,611,789 or 2007/0061105 or 2007/0208531 or 7,428,471 or 7,617,071 or 2010/0057398 or 7,962,312) when a step has not detected within a predetermined period or interval or duration of time then a sleep mode is initialed until a qualifying acceleration has been detected and the monitor wakes up;

(f) Tsuji (2005/0232388 or 2005/0238132 or JP 2005-309691 A or 7,169,084 or 7,297,088) any variation in the amplitude/magnitude or pattern or signature of the sensor signal from the sensor that is greater than on step cycle is counted as representing one or more human motions such as one or more steps; and

(g) Seo et al (2006/0020177 or 7,334,472) the sampling frequency of the pedometer is changed when a step has not been detected within a predetermined period or interval or duration of time since the last detected step and then a sleep mode is initialed until a qualifying acceleration is detected and the monitor wakes up.

B) the prior art does not fairly teach or suggest in regard to claims 3, 13 & 17 a process in claim 3, a machine in claim 13, and a tangible non-transitory article/manufacture in claim 17 that provides the useful and beneficial function of monitoring the activity of an user by providing actions in claim 3 and structures in claims 13 & 17 that perform at least the functions of:

(1) assigning a dominant axis for an inertial sensor based upon the orientation of the inertial sensor;

(2) detecting a change in the orientation of the inertial sensor and updating the assigned dominant axis for the inertial sensor based upon the detected change in the orientation of the inertial sensor;

(3) maintaining and using a cadence window that is updated as the actual cadence changes; and

(4) counting period motions by monitoring accelerations relative to the dominant axis of the inertial sensor that occur within the cadence window.

Claims 4-5, which depend from claim 3, and claims 18-19, which depend from claim 16, are allowable over the prior art for the same reason.

12. RELEVANT ART OF INTEREST

12.1 The Examiner has cited prior art of interest, for example:

A) either Kahn et al (7,457,719) or Kahn et al (2009/0043531 or 2009/0234614 or 2009/0319221 or 7,647,196 or 7,653,508 or 2010/0056872 or 7,753,861 or 7,788,059 or

7,881,902 or 7,987,070 or 8,187,182: a latter effective date) are publications of related applications with at least one common inventor.

13. CONCLUSION

13.1 Any inquiry concerning this communication or earlier communications from the Examiner should be directed to Edward R. Cosimano whose telephone number is 571-272-0571. The Examiner can normally be reached on 571-272-0571 from 8:30am to 5:00pm.

13.2 If attempts to reach the Examiner by telephone are unsuccessful, the Examiner's supervisor, Andrew Schechter, can be reached on 571-272-2302. The fax phone number for the organization where this application or proceeding is assigned is 571-273-8300.

13.3 Information regarding the status of an application may be obtained from the Patent Application Information Retrieval (PAIR) system. Status information for published applications may be obtained from either Private PAIR or Public PAIR. Status information for unpublished applications is available through Private PAIR only. For more information about the PAIR system, see http://portal.uspto.gov/external/portal. Should you have questions on access to the Private PAIR system, contact the Electronic Business Center (EBC) at 866-217-9197 (toll-free).

ERC
05/20/2012

/Edward Cosimano/
Primary Examiner Unit 2857

Wynn W. Coggins
Director Technology Center 2800

Search Notes	Application/Control No.	Applicant(s)/Patent Under Reexamination
	13018321	KAHN ET AL.
	Examiner	Art Unit
	EDWARD COSIMANO	2857

SEARCHED			
Class	Subclass	Date	Examiner
33	700, 701	11/03/2011	ERC
73	1.01, 1.37, 1.38, 1.75, 1.76, 1.77, 1.78, 1.79, 1.81, 432.1, 865.4, 865.8	11/03/2011	ERC
377	1, 13, 15, 17, 19, 20, 24, 24.1, 24.2	11/03/2011	ERC
702	1, 85, 97, 104, 127, 141, 150, 155, 158, 160, 187, 189	11/03/2011	ERC
708	100, 101, 105, 131, 160, 200, 212	11/03/2011	ERC
Updated	above	01/21/2012	ERC
Updated	above	05/19/2012	ERC

SEARCH NOTES		
Search Notes	Date	Examiner
Inventor Name Search; Continuity Check	10/28/2011	ERC
EAST (USOCR, USPAT, US-PGPUB, DERWENT, EPO, FPRS, JPO, IBM-TDB)	11/03/2011	ERC
Updated EAST search of 03 November 2011 with additional terms	01/21/2012	ERC
EAST (USOCR, USPAT, US-PGPUB, DERWENT, EPO, FPRS, JPO, IBM-TDB)	05/19/2012	ERC

INTERFERENCE SEARCH			
Class	Subclass	Date	Examiner

UNITED STATES PATENT AND TRADEMARK OFFICE

UNITED STATES DEPARTMENT OF COMMERCE
United States Patent and Trademark Office
Address: COMMISSIONER FOR PATENTS
P.O. Box 1450
Alexandria, Virginia 22313-1450
www.uspto.gov

APPLICATION NO.	FILING DATE	FIRST NAMED INVENTOR	ATTORNEY DOCKET NO.	CONFIRMATION NO.
13/018,321	01/31/2011	Philippe Kahn	8689P027C2	8340

8791 7590 09/05/2012
BLAKELY SOKOLOFF TAYLOR & ZAFMAN
1279 Oakmead Parkway
Sunnyvale, CA 94085-4040

EXAMINER	
COSIMANO, EDWARD R	
ART UNIT	PAPER NUMBER
2857	
MAIL DATE	DELIVERY MODE
09/05/2012	PAPER

Please find below and/or attached an Office communication concerning this application or proceeding.

The time period for reply, if any, is set in the attached communication.

UNITED STATES PATENT AND TRADEMARK OFFICE

Commissioner for Patents
United States Patent and Trademark Office
P.O. Box 1450
Alexandria, VA 22313-1450
www.uspto.gov

BLAKELY SOKOLOFF TAYLOR & ZAFNAN
1279 Oakmead Parkway
Sunnyvale CA 94085-4040

In re Application of:	:	NOTICE OF WITHDRAWAL
Kahn *et al.*	:	FROM ISSUE
Serial No.: 13/018,321	:	UNDER 37 CFR § 1.313
Filed: January 31, 2011	:	
Attorney Docket No.: **8689P027C2**		

The purpose of this communication is to inform you that the above-identified application is being withdrawn from issue pursuant to 37 CFR § 1.313.

The above-identified application is hereby withdrawn from issue. The Notice of Allowance and Issue Fee Due and the Notice of Allowability mailed January 27, 2012, are hereby vacated.

The application is being withdrawn to permit reopening of prosecution. The reasons therefor will be communicated to you by the examiner.

Upon receipt of a new Notice of Allowance and Issue Fee Due, applicant may request that any previously submitted issue fee be applied toward payment of the issue fee in the amount identified on the new Notice of Allowance and Issue Fee Due. If the application is abandoned, applicant may request either a refund, or a credit to a Deposit Account.

Telephone inquires should be directed to Andrew Schechter at (571) 272-2302.

The above-identified application is being forwarded to the examiner for prompt appropriate action.

Wynn Coggins, Director
Technology Center 2800
Semiconductors, Electrical and Optical
Systems and Components

PART B - FEE(S) TRANSMITTAL

Complete and send this form, together with applicable fee(s), to: Mail **Mail Stop ISSUE FEE**
Commissioner for Patents
P.O. Box 1450
Alexandria, Virginia 22313-1450
or Fax (571)-273-2885

INSTRUCTIONS: This form should be used for transmitting the ISSUE FEE and PUBLICATION FEE (if required). Blocks 1 through 5 should be completed where appropriate. All further correspondence including the Patent, advance orders and notification of maintenance fees will be mailed to the current correspondence address as indicated unless corrected below or directed otherwise in Block 1, by (a) specifying a new correspondence address; and/or (b) indicating a separate "FEE ADDRESS" for maintenance fee notifications.

CURRENT CORRESPONDENCE ADDRESS (Note: Use Block 1 for any change of address)

8791 7590 01/27/2012
BLAKELY SOKOLOFF TAYLOR & ZAFMAN LLP
1279 OAKMEAD PARKWAY
SUNNYVALE, CA 94085-4040

Note: A certificate of mailing can only be used for domestic mailings of the Fee(s) Transmittal. This certificate cannot be used for any other accompanying papers. Each additional paper, such as an assignment or formal drawing, must have its own certificate of mailing or transmission.

Certificate of Transmission
I hereby certify that this Fee(s) Transmittal is being submitted electronically via EFS Web on the date shown below.

Judith A. Szepesi	(Depositor's name)
/Judith Szepesi/	(Signature)
April 25, 2012	(Date)

APPLICATION NO.	FILING DATE	FIRST NAMED INVENTOR	ATTORNEY DOCKET NO.	CONFIRMATION NO.
13/018,321	01/31/2011	Philippe Kahn	8689P027C2	8340

TITLE OF INVENTION: HUMAN ACTIVITY MONITORING DEVICE

APPLN. TYPE	SMALL ENTITY	ISSUE FEE DUE	PUBLICATION FEE DUE	PREV. PAID ISSUE FEE	TOTAL FEE(S) DUE	DATE DUE
nonprovisional	NO	$1740	$0	$0	$1740	04/27/2012

EXAMINER	ART UNIT	CLASS-SUBCLASS
COSIMANO, EDWARD R	2857	702-160000

1. Change of correspondence address or indication of "Fee Address" (37 CFR 1.363).
- ☐ Change of correspondence address (or Change of Correspondence Address form PTO/SB/122) attached.
- ☐ "Fee Address" indication (or "Fee Address" Indication form PTO/SB/47; Rev 03-02 or more recent) attached. **Use of a Customer Number is required.**

2. For printing on the patent front page, list
(1) the names of up to 3 registered patent attorneys or agents OR, alternatively,
(2) the name of a single firm (having as a member a registered attorney or agent) and the names of up to 2 registered patent attorneys or agents. If no name is listed, no name will be printed.

1 Blakely, Sokoloff,
2 Taylor & Zafman, LLP
3 Judith A. Szepesi

3. ASSIGNEE NAME AND RESIDENCE DATA TO BE PRINTED ON THE PATENT (print or type)

PLEASE NOTE: Unless an assignee is identified below, no assignee data will appear on the patent. If an assignee is identified below, the document has been filed for recordation as set forth in 37 CFR 3.11. Completion of this form is NOT a substitute for filing an assignment.

(A) NAME OF ASSIGNEE	(B) RESIDENCE: (CITY and STATE OR COUNTRY)
DP Technologies, Inc.	Scotts Valley, California

Please check the appropriate assignee category or categories (will not be printed on the patent) : ☐ Individual ☒ Corporation or other private group entity ☐ Government

4a. The following fee(s) are submitted:
- ☒ Issue Fee
- ☒ Publication Fee (No small entity discount permitted)
- ☐ Advance Order - # of Copies _____

4b. Payment of Fee(s): **(Please first reapply any previously paid issue fee shown above)**
- ☐ A check is enclosed.
- ☐ Payment by credit card. Form PTO-2038 is attached.
- ☒ The Director is hereby authorized to charge the required fee(s), any deficiency, or credit any overpayment, to Deposit Account Number 02-2666 (enclose an extra copy of this form).

5. **Change in Entity Status** (from status indicated above)
- ☐ a. Applicant claims SMALL ENTITY status. See 37 CFR 1.27.
- ☐ b. Applicant is no longer claiming SMALL ENTITY status. See 37 CFR 1.27(g)(2).

NOTE: The Issue Fee and Publication Fee (if required) will not be accepted from anyone other than the applicant; a registered attorney or agent; or the assignee or other party in interest as shown by the records of the United States Patent and Trademark Office.

Authorized Signature /Judith Szepesi/ Date April 25, 2012

Typed or printed name Judith A. Szepesi Registration No. 39,393

This collection of information is required by 37 CFR 1.311. The information is required to obtain or retain a benefit by the public which is to file (and by the USPTO to process) an application. Confidentiality is governed by 35 U.S.C. 122 and 37 CFR 1.14. This collection is estimated to take 12 minutes to complete, including gathering, preparing, and submitting the completed application form to the USPTO. Time will vary depending upon the individual case. Any comments on the amount of time you require to complete this form and/or suggestions for reducing this burden, should be sent to the Chief Information Officer, U.S. Patent and Trademark Office, U.S. Department of Commerce, P.O. Box 1450, Alexandria, Virginia 22313-1450. DO NOT SEND FEES OR COMPLETED FORMS TO THIS ADDRESS. SEND TO: Commissioner for Patents, P.O. Box 1450, Alexandria, Virginia 22313-1450.

Under the Paperwork Reduction Act of 1995, no persons are required to respond to a collection of information unless it displays a valid OMB control number.

Electronic Patent Application Fee Transmittal	
Application Number:	13018321
Filing Date:	31-Jan-2011
Title of Invention:	HUMAN ACTIVITY MONITORING DEVICE
First Named Inventor/Applicant Name:	Philippe Kahn
Filer:	Judith A. Szepesi/Joan Abriam
Attorney Docket Number:	8689P027C2
Filed as Large Entity	

Utility under 35 USC 111(a) Filing Fees

Description	Fee Code	Quantity	Amount	Sub-Total in USD($)
Basic Filing:				
Pages:				
Claims:				
Miscellaneous-Filing:				
Petition:				
Patent-Appeals-and-Interference:				
Post-Allowance-and-Post-Issuance:				
Utility Appl issue fee	1501	1	1740	1740
Extension-of-Time:				

Description	Fee Code	Quantity	Amount	Sub-Total in USD($)
Miscellaneous:				
			Total in USD ($)	**1740**

Electronic Acknowledgement Receipt	
EFS ID:	12631948
Application Number:	13018321
International Application Number:	
Confirmation Number:	8340
Title of Invention:	HUMAN ACTIVITY MONITORING DEVICE
First Named Inventor/Applicant Name:	Philippe Kahn
Customer Number:	8791
Filer:	Judith A. Szepesi
Filer Authorized By:	
Attorney Docket Number:	8689P027C2
Receipt Date:	26-APR-2012
Filing Date:	31-JAN-2011
Time Stamp:	02:12:30
Application Type:	Utility under 35 USC 111(a)

Payment information:

Submitted with Payment	yes
Payment Type	Deposit Account
Payment was successfully received in RAM	$1740
RAM confirmation Number	11320
Deposit Account	022666
Authorized User	

File Listing:

Document Number	Document Description	File Name	File Size(Bytes)/ Message Digest	Multi Part /.zip	Pages (if appl.)

1	Issue Fee Payment (PTO-85B)	8689P027C2_Issue_Fee_Payment.pdf	266226 8b5317589f8a130bdf65497a7e2979600a07d767	no	1
Warnings:					
Information:					
2	Fee Worksheet (SB06)	fee-info.pdf	30502 7aba20649e964df5c519179c8899efb58ea1e35e	no	2
Warnings:					
Information:					
		Total Files Size (in bytes):	296728		

This Acknowledgement Receipt evidences receipt on the noted date by the USPTO of the indicated documents, characterized by the applicant, and including page counts, where applicable. It serves as evidence of receipt similar to a Post Card, as described in MPEP 503.

New Applications Under 35 U.S.C. 111
If a new application is being filed and the application includes the necessary components for a filing date (see 37 CFR 1.53(b)-(d) and MPEP 506), a Filing Receipt (37 CFR 1.54) will be issued in due course and the date shown on this Acknowledgement Receipt will establish the filing date of the application.

National Stage of an International Application under 35 U.S.C. 371
If a timely submission to enter the national stage of an international application is compliant with the conditions of 35 U.S.C. 371 and other applicable requirements a Form PCT/DO/EO/903 indicating acceptance of the application as a national stage submission under 35 U.S.C. 371 will be issued in addition to the Filing Receipt, in due course.

New International Application Filed with the USPTO as a Receiving Office
If a new international application is being filed and the international application includes the necessary components for an international filing date (see PCT Article 11 and MPEP 1810), a Notification of the International Application Number and of the International Filing Date (Form PCT/RO/105) will be issued in due course, subject to prescriptions concerning national security, and the date shown on this Acknowledgement Receipt will establish the international filing date of the application.

UNITED STATES PATENT AND TRADEMARK OFFICE

UNITED STATES DEPARTMENT OF COMMERCE
United States Patent and Trademark Office
Address: COMMISSIONER FOR PATENTS
P.O. Box 1450
Alexandria, Virginia 22313-1450
www.uspto.gov

NOTICE OF ALLOWANCE AND FEE(S) DUE

8791 7590 01/27/2012

BLAKELY SOKOLOFF TAYLOR & ZAFMAN LLP
1279 OAKMEAD PARKWAY
SUNNYVALE, CA 94085-4040

EXAMINER	
COSIMANO, EDWARD R	
ART UNIT	PAPER NUMBER
2857	

DATE MAILED: 01/27/2012

APPLICATION NO.	FILING DATE	FIRST NAMED INVENTOR	ATTORNEY DOCKET NO.	CONFIRMATION NO.
13/018,321	01/31/2011	Philippe Kahn	8689P027C2	8340

TITLE OF INVENTION: HUMAN ACTIVITY MONITORING DEVICE

APPLN. TYPE	SMALL ENTITY	ISSUE FEE DUE	PUBLICATION FEE DUE	PREV. PAID ISSUE FEE	TOTAL FEE(S) DUE	DATE DUE
nonprovisional	NO	$1740	$0	$0	$1740	04/27/2012

THE APPLICATION IDENTIFIED ABOVE HAS BEEN EXAMINED AND IS ALLOWED FOR ISSUANCE AS A PATENT. PROSECUTION ON THE MERITS IS CLOSED. THIS NOTICE OF ALLOWANCE IS NOT A GRANT OF PATENT RIGHTS. THIS APPLICATION IS SUBJECT TO WITHDRAWAL FROM ISSUE AT THE INITIATIVE OF THE OFFICE OR UPON PETITION BY THE APPLICANT. SEE 37 CFR 1.313 AND MPEP 1308.

THE ISSUE FEE AND PUBLICATION FEE (IF REQUIRED) MUST BE PAID WITHIN THREE MONTHS FROM THE MAILING DATE OF THIS NOTICE OR THIS APPLICATION SHALL BE REGARDED AS ABANDONED. THIS STATUTORY PERIOD CANNOT BE EXTENDED. SEE 35 U.S.C. 151. THE ISSUE FEE DUE INDICATED ABOVE DOES NOT REFLECT A CREDIT FOR ANY PREVIOUSLY PAID ISSUE FEE IN THIS APPLICATION. IF AN ISSUE FEE HAS PREVIOUSLY BEEN PAID IN THIS APPLICATION (AS SHOWN ABOVE), THE RETURN OF PART B OF THIS FORM WILL BE CONSIDERED A REQUEST TO REAPPLY THE PREVIOUSLY PAID ISSUE FEE TOWARD THE ISSUE FEE NOW DUE.

HOW TO REPLY TO THIS NOTICE:

I. Review the SMALL ENTITY status shown above.

If the SMALL ENTITY is shown as YES, verify your current SMALL ENTITY status:

A. If the status is the same, pay the TOTAL FEE(S) DUE shown above.

B. If the status above is to be removed, check box 5b on Part B - Fee(s) Transmittal and pay the PUBLICATION FEE (if required) and twice the amount of the ISSUE FEE shown above, or

If the SMALL ENTITY is shown as NO:

A. Pay TOTAL FEE(S) DUE shown above, or

B. If applicant claimed SMALL ENTITY status before, or is now claiming SMALL ENTITY status, check box 5a on Part B - Fee(s) Transmittal and pay the PUBLICATION FEE (if required) and 1/2 the ISSUE FEE shown above.

II. PART B - FEE(S) TRANSMITTAL, or its equivalent, must be completed and returned to the United States Patent and Trademark Office (USPTO) with your ISSUE FEE and PUBLICATION FEE (if required). If you are charging the fee(s) to your deposit account, section "4b" of Part B - Fee(s) Transmittal should be completed and an extra copy of the form should be submitted. If an equivalent of Part B is filed, a request to reapply a previously paid issue fee must be clearly made, and delays in processing may occur due to the difficulty in recognizing the paper as an equivalent of Part B.

III. All communications regarding this application must give the application number. Please direct all communications prior to issuance to Mail Stop ISSUE FEE unless advised to the contrary.

IMPORTANT REMINDER: Utility patents issuing on applications filed on or after Dec. 12, 1980 may require payment of maintenance fees. It is patentee's responsibility to ensure timely payment of maintenance fees when due.

PTOL-85 (Rev. 02/11)

PART B - FEE(S) TRANSMITTAL

Complete and send this form, together with applicable fee(s), to: Mail **Mail Stop ISSUE FEE**
Commissioner for Patents
P.O. Box 1450
Alexandria, Virginia 22313-1450
or Fax (571)-273-2885

INSTRUCTIONS: This form should be used for transmitting the ISSUE FEE and PUBLICATION FEE (if required). Blocks 1 through 5 should be completed where appropriate. All further correspondence including the Patent, advance orders and notification of maintenance fees will be mailed to the current correspondence address as indicated unless corrected below or directed otherwise in Block 1, by (a) specifying a new correspondence address; and/or (b) indicating a separate "FEE ADDRESS" for maintenance fee notifications.

CURRENT CORRESPONDENCE ADDRESS (Note: Use Block 1 for any change of address)

8791 7590 01/27/2012
BLAKELY SOKOLOFF TAYLOR & ZAFMAN LLP
1279 OAKMEAD PARKWAY
SUNNYVALE, CA 94085-4040

Note: A certificate of mailing can only be used for domestic mailings of the Fee(s) Transmittal. This certificate cannot be used for any other accompanying papers. Each additional paper, such as an assignment or formal drawing, must have its own certificate of mailing or transmission.

Certificate of Mailing or Transmission
I hereby certify that this Fee(s) Transmittal is being deposited with the United States Postal Service with sufficient postage for first class mail in an envelope addressed to the Mail Stop ISSUE FEE address above, or being facsimile transmitted to the USPTO (571) 273-2885, on the date indicated below.

(Depositor's name)
(Signature)
(Date)

APPLICATION NO.	FILING DATE	FIRST NAMED INVENTOR	ATTORNEY DOCKET NO.	CONFIRMATION NO.
13/018,321	01/31/2011	Philippe Kahn	8689P027C2	8340

TITLE OF INVENTION: HUMAN ACTIVITY MONITORING DEVICE

APPLN. TYPE	SMALL ENTITY	ISSUE FEE DUE	PUBLICATION FEE DUE	PREV. PAID ISSUE FEE	TOTAL FEE(S) DUE	DATE DUE
nonprovisional	NO	$1740	$0	$0	$1740	04/27/2012

EXAMINER	ART UNIT	CLASS-SUBCLASS
COSIMANO, EDWARD R	2857	702-160000

1. Change of correspondence address or indication of "Fee Address" (37 CFR 1.363).
- ❑ Change of correspondence address (or Change of Correspondence Address form PTO/SB/122) attached.
- ❑ "Fee Address" indication (or "Fee Address" Indication form PTO/SB/47; Rev 03-02 or more recent) attached. **Use of a Customer Number is required.**

2. For printing on the patent front page, list
(1) the names of up to 3 registered patent attorneys or agents OR, alternatively,
(2) the name of a single firm (having as a member a registered attorney or agent) and the names of up to 2 registered patent attorneys or agents. If no name is listed, no name will be printed.
1 _____
2 _____
3 _____

3. ASSIGNEE NAME AND RESIDENCE DATA TO BE PRINTED ON THE PATENT (print or type)

PLEASE NOTE: Unless an assignee is identified below, no assignee data will appear on the patent. If an assignee is identified below, the document has been filed for recordation as set forth in 37 CFR 3.11. Completion of this form is NOT a substitute for filing an assignment.

(A) NAME OF ASSIGNEE (B) RESIDENCE: (CITY and STATE OR COUNTRY)

Please check the appropriate assignee category or categories (will not be printed on the patent) : ❑ Individual ❑ Corporation or other private group entity ❑ Government

4a. The following fee(s) are submitted:
- ❑ Issue Fee
- ❑ Publication Fee (No small entity discount permitted)
- ❑ Advance Order - # of Copies _____

4b. Payment of Fee(s): (**Please first reapply any previously paid issue fee shown above**)
- ❑ A check is enclosed.
- ❑ Payment by credit card. Form PTO-2038 is attached.
- ❑ The Director is hereby authorized to charge the required fee(s), any deficiency, or credit any overpayment, to Deposit Account Number _____ (enclose an extra copy of this form).

5. **Change in Entity Status** (from status indicated above)
- ❑ a. Applicant claims SMALL ENTITY status. See 37 CFR 1.27.
- ❑ b. Applicant is no longer claiming SMALL ENTITY status. See 37 CFR 1.27(g)(2).

NOTE: The Issue Fee and Publication Fee (if required) will not be accepted from anyone other than the applicant; a registered attorney or agent; or the assignee or other party in interest as shown by the records of the United States Patent and Trademark Office.

Authorized Signature _____ Date _____

Typed or printed name _____ Registration No. _____

This collection of information is required by 37 CFR 1.311. The information is required to obtain or retain a benefit by the public which is to file (and by the USPTO to process) an application. Confidentiality is governed by 35 U.S.C. 122 and 37 CFR 1.14. This collection is estimated to take 12 minutes to complete, including gathering, preparing, and submitting the completed application form to the USPTO. Time will vary depending upon the individual case. Any comments on the amount of time you require to complete this form and/or suggestions for reducing this burden, should be sent to the Chief Information Officer, U.S. Patent and Trademark Office, U.S. Department of Commerce, P.O. Box 1450, Alexandria, Virginia 22313-1450. DO NOT SEND FEES OR COMPLETED FORMS TO THIS ADDRESS. SEND TO: Commissioner for Patents, P.O. Box 1450, Alexandria, Virginia 22313-1450.

Under the Paperwork Reduction Act of 1995, no persons are required to respond to a collection of information unless it displays a valid OMB control number.

UNITED STATES PATENT AND TRADEMARK OFFICE

UNITED STATES DEPARTMENT OF COMMERCE
United States Patent and Trademark Office
Address: COMMISSIONER FOR PATENTS
P.O. Box 1450
Alexandria, Virginia 22313-1450
www.uspto.gov

APPLICATION NO.	FILING DATE	FIRST NAMED INVENTOR	ATTORNEY DOCKET NO.	CONFIRMATION NO.
13/018,321	01/31/2011	Philippe Kahn	8689P027C2	8340

8791 7590 01/27/2012

BLAKELY SOKOLOFF TAYLOR & ZAFMAN LLP
1279 OAKMEAD PARKWAY
SUNNYVALE, CA 94085-4040

EXAMINER	
COSIMANO, EDWARD R	
ART UNIT	PAPER NUMBER
2857	

DATE MAILED: 01/27/2012

Determination of Patent Term Adjustment under 35 U.S.C. 154 (b)
(application filed on or after May 29, 2000)

The Patent Term Adjustment to date is 0 day(s). If the issue fee is paid on the date that is three months after the mailing date of this notice and the patent issues on the Tuesday before the date that is 28 weeks (six and a half months) after the mailing date of this notice, the Patent Term Adjustment will be 0 day(s).

If a Continued Prosecution Application (CPA) was filed in the above-identified application, the filing date that determines Patent Term Adjustment is the filing date of the most recent CPA.

Applicant will be able to obtain more detailed information by accessing the Patent Application Information Retrieval (PAIR) WEB site (http://pair.uspto.gov).

Any questions regarding the Patent Term Extension or Adjustment determination should be directed to the Office of Patent Legal Administration at (571)-272-7702. Questions relating to issue and publication fee payments should be directed to the Customer Service Center of the Office of Patent Publication at 1-(888)-786-0101 or (571)-272-4200.

Privacy Act Statement

The Privacy Act of 1974 (P.L. 93-579) requires that you be given certain information in connection with your submission of the attached form related to a patent application or patent. Accordingly, pursuant to the requirements of the Act, please be advised that: (1) the general authority for the collection of this information is 35 U.S.C. 2(b)(2); (2) furnishing of the information solicited is voluntary; and (3) the principal purpose for which the information is used by the U.S. Patent and Trademark Office is to process and/or examine your submission related to a patent application or patent. If you do not furnish the requested information, the U.S. Patent and Trademark Office may not be able to process and/or examine your submission, which may result in termination of proceedings or abandonment of the application or expiration of the patent.

The information provided by you in this form will be subject to the following routine uses:

1. The information on this form will be treated confidentially to the extent allowed under the Freedom of Information Act (5 U.S.C. 552) and the Privacy Act (5 U.S.C 552a). Records from this system of records may be disclosed to the Department of Justice to determine whether disclosure of these records is required by the Freedom of Information Act.
2. A record from this system of records may be disclosed, as a routine use, in the course of presenting evidence to a court, magistrate, or administrative tribunal, including disclosures to opposing counsel in the course of settlement negotiations.
3. A record in this system of records may be disclosed, as a routine use, to a Member of Congress submitting a request involving an individual, to whom the record pertains, when the individual has requested assistance from the Member with respect to the subject matter of the record.
4. A record in this system of records may be disclosed, as a routine use, to a contractor of the Agency having need for the information in order to perform a contract. Recipients of information shall be required to comply with the requirements of the Privacy Act of 1974, as amended, pursuant to 5 U.S.C. 552a(m).
5. A record related to an International Application filed under the Patent Cooperation Treaty in this system of records may be disclosed, as a routine use, to the International Bureau of the World Intellectual Property Organization, pursuant to the Patent Cooperation Treaty.
6. A record in this system of records may be disclosed, as a routine use, to another federal agency for purposes of National Security review (35 U.S.C. 181) and for review pursuant to the Atomic Energy Act (42 U.S.C. 218(c)).
7. A record from this system of records may be disclosed, as a routine use, to the Administrator, General Services, or his/her designee, during an inspection of records conducted by GSA as part of that agency's responsibility to recommend improvements in records management practices and programs, under authority of 44 U.S.C. 2904 and 2906. Such disclosure shall be made in accordance with the GSA regulations governing inspection of records for this purpose, and any other relevant (i.e., GSA or Commerce) directive. Such disclosure shall not be used to make determinations about individuals.
8. A record from this system of records may be disclosed, as a routine use, to the public after either publication of the application pursuant to 35 U.S.C. 122(b) or issuance of a patent pursuant to 35 U.S.C. 151. Further, a record may be disclosed, subject to the limitations of 37 CFR 1.14, as a routine use, to the public if the record was filed in an application which became abandoned or in which the proceedings were terminated and which application is referenced by either a published application, an application open to public inspection or an issued patent.
9. A record from this system of records may be disclosed, as a routine use, to a Federal, State, or local law enforcement agency, if the USPTO becomes aware of a violation or potential violation of law or regulation.

Notice of Allowability	Application No.	Applicant(s)	
	13/018,321	KAHN ET AL.	
	Examiner	Art Unit	
	EDWARD COSIMANO	2857	

-- The MAILING DATE of this communication appears on the cover sheet with the correspondence address--

All claims being allowable, PROSECUTION ON THE MERITS IS (OR REMAINS) CLOSED in this application. If not included herewith (or previously mailed), a Notice of Allowance (PTOL-85) or other appropriate communication will be mailed in due course. **THIS NOTICE OF ALLOWABILITY IS NOT A GRANT OF PATENT RIGHTS.** This application is subject to withdrawal from issue at the initiative of the Office or upon petition by the applicant. See 37 CFR 1.313 and MPEP 1308.

1. ☒ This communication is responsive to *the amendment filed on 09 January 2012*.

2. ☐ An election was made by the applicant in response to a restriction requirement set forth during the interview on _____; the restriction requirement and election have been incorporated into this action.

3. ☒ The allowed claim(s) is/are *1-20*.

4. ☐ Acknowledgment is made of a claim for foreign priority under 35 U.S.C. § 119(a)-(d) or (f).
   a) ☐ All b) ☐ Some* c) ☐ None of the:
      1. ☐ Certified copies of the priority documents have been received.
      2. ☐ Certified copies of the priority documents have been received in Application No. _____ .
      3. ☐ Copies of the certified copies of the priority documents have been received in this national stage application from the International Bureau (PCT Rule 17.2(a)).

   * Certified copies not received: _____.

Applicant has THREE MONTHS FROM THE "MAILING DATE" of this communication to file a reply complying with the requirements noted below. Failure to timely comply will result in ABANDONMENT of this application.
THIS THREE-MONTH PERIOD IS NOT EXTENDABLE.

5. ☐ A SUBSTITUTE OATH OR DECLARATION must be submitted. Note the attached EXAMINER'S AMENDMENT or NOTICE OF INFORMAL PATENT APPLICATION (PTO-152) which gives reason(s) why the oath or declaration is deficient.

6. ☐ CORRECTED DRAWINGS (as "replacement sheets") must be submitted.
   (a) ☐ including changes required by the Notice of Draftsperson's Patent Drawing Review (PTO-948) attached
      1) ☐ hereto or 2) ☐ to Paper No./Mail Date _____.
   (b) ☐ including changes required by the attached Examiner's Amendment / Comment or in the Office action of Paper No./Mail Date _____.

   Identifying indicia such as the application number (see 37 CFR 1.84(c)) should be written on the drawings in the front (not the back) of each sheet. Replacement sheet(s) should be labeled as such in the header according to 37 CFR 1.121(d).

7. ☐ DEPOSIT OF and/or INFORMATION about the deposit of BIOLOGICAL MATERIAL must be submitted. Note the attached Examiner's comment regarding REQUIREMENT FOR THE DEPOSIT OF BIOLOGICAL MATERIAL.

Attachment(s)

1. ☒ Notice of References Cited (PTO-892)
2. ☐ Notice of Draftperson's Patent Drawing Review (PTO-948)
3. ☒ Information Disclosure Statements (PTO/SB/08), Paper No./Mail Date 01/09/2012
4. ☐ Examiner's Comment Regarding Requirement for Deposit of Biological Material
5. ☐ Notice of Informal Patent Application
6. ☐ Interview Summary (PTO-413), Paper No./Mail Date _____ .
7. ☒ Examiner's Amendment/Comment
8. ☒ Examiner's Statement of Reasons for Allowance
9. ☐ Other _____.

1. EXAMINER'S COMMENT

1.1 When preparing this Office action the Examiner considers the instant application to include:

A) the copy of the Oath/Declaration from grandparent application serial number 11/644,455 which was filed on 31 January 2011 and that is acceptable to the Examiner;

B) the content of the Abstract which was filed on 31 August 2011 and that is acceptable to the Examiner;

C) figures 1, 2, 3, 4, 5, 6, 7, 8 & 9 of the set of drawings containing 9 sheets of 9 figures comprising figures 1, 2, 3, 4, 5, 6, 7, 8 & 9 as presented in the set of drawings filed on 31 January 2011 where the content of figures 3, 4, 5, 6, 7, 8 & 9 of the above set of drawings is acceptable to the Examiner;

D) the written description as filed on 31 January 2011 and amended on 09 January 2012;

E) the set of claims as filed on 31 January 2011; and

F) the NON-Publication request filed on 31 January 2011.

2. BENEFIT OF AN EARLIER FILING DATE

2.1 Applicant's claim for the benefit of an earlier filing date pursuant to 35 U.S.C. 120 is acknowledged.

3. PRIOR ART FROM EARLIER APPLICATIONS

3.1 The Examiner has considered the prior art cited in the applications for which Applicant has claimed the benefit of an earlier filing date pursuant to 35 U.S.C. 120.

3.1.1 If Applicant wishes any of the prior art that was cited in each of the base applications but that has not been cited during the prosecution of the instant application to appear on any Patent granted on the instant application, then Applicant must provide a properly completed PTO-1449 containing proper citations of the prior art that Applicant wishes to appear on any Patent that may be granted on the instant application.

4. INFORMATION DISCLOSURE STATEMENT (IDS)

4.1 The Examiner notes that each of the documents that have been crossed off each IDS that was filed on 16 May 2011 have been crossed off because each of these documents are

duplicate of a citation of the same document which has been cited on the IDS filed 31 January 2011 and that has been considered by the Examiner.

4.2 The IDS filed on 09 January 2012 fails to comply with the provisions of 37 CFR 1.97 and MPEP § 609 because:

A) it fails to comply with 37 CFR 1.97(d) because it lacks a statement as specified in 37 CFR 1.97(e); and

It has been placed in the application file, but the information referred to therein has not been considered as to the merits. Applicant is advised that the date of any re-submission of any item of information contained in this information disclosure statement or the submission of any missing element(s) will be the date of submission for purposes of determining compliance with the requirements based on the time of filing the statement, including all certification requirements for statements under 37 CFR 1.97(e). See MPEP § 609.05(a).

4.2.1 In regard to the IDS filed on 09 January 2012, the Examiner notes that in view of the Ex Parte Quayle action mailed on 08 November 2011 that closed prosecution on the merits, the IDS must be submitted pursuant to 37 CFR 1.97(d) and not 37 CFR 1.97(c) as set forth by Applicant in the IDS transmittal letter. Further pursuant to 37 CFR 1.97(d) while the IDS submission lacks the required certification statement, see 37 CFR 1.97(e), the IDS submission does include the required fee.

5. RESPONSE TO APPLICANT'S ARGUMENTS

5.1 The objections and/or rejections that have not been repeated here in have been overcome by Applicant's last response.

6. REASONS FOR ALLOWANCE

6.1 The following is a statement of reasons for the indication of allowable subject matter:

A) the prior art, for example:

(1) either Richardson et al (5,976,083 or 6,135,951) or Ebeling et al (6,145,389) or Tsuji (2005/0232388 or 2005/0238132 or 7,169,084 or 7,297,088) or Darley (6,611,789 or 2007/0061105 or 2007/0208531 or 7,428,471 or 7,617,071 or 2010/0057398 or 7,962,312) or Park et al (2007/0067094 or 7,640,134) disclose a machine/process that provides the useful and beneficial function of monitoring the physical fitness activities of an user. To monitor the physical fitness activities of the

user, a suitable accelerometer is used in order to monitor the acceleration experienced by the user while performing a physical fitness activity. The measured acceleration data/information for the user's physical fitness activity is then suitably processed by being suitably analyzed or evaluated in order to:

(1a) detect any variation in the measured acceleration that would represent a particular physical fitness activity being performed by the user; and

(1b) make a more accurate determination of the user's steps or strides so as to determine an more accurate measurement of the user's step or stride distance for the user's particular physical fitness activity.

In this manner the total distance that has been traveled by the user during the particular physical fitness activity may be more accurately determined based on the user's step or stride or gait and the total distance that is traveled by the user during each step or stride gait of the user. Whereas further taught or suggested by either Darley (6,611,789 or 2007/0061105 or 2007/0208531 or 7,428,471 or 7,617,071 or 2010/0057398 or 7,962,312) when a step is not detected within a predetermined period or interval or duration of time then a sleep mode is initialed until a qualifying acceleration has been detected and the monitor wakes up.

(2) either Sakuria et al (6,369,794) or Kubo et al (2002/0089425 or 6,700,499) or Ladetto et al (2003/0018430 or 6,826,477) disclose a machine/process that provides the useful and beneficial function of determining an user's action or motion. To determine the user's action or motion a suitable accelerometer is used in order to measure or detect an acceleration which represents the user's action or motion. The measured acceleration data/information is then suitable processed by being suitably evaluated or analyzed in order to determine the time variations in the measured acceleration data/information which represent an action or motion of the user.

(3) either Seo et al (2006/0020177 or 7,334,472) disclose a machine/process that provides the useful and beneficial function of placing an acceleration based pedometer machine/process into a sleep or low power mode. Where the sampling frequency of the pedometer is changed when a step has not been detected within a predetermined period

or interval or duration of time since the last detected step and then a sleep mode is initialed until a qualifying acceleration is detected and the monitor wakes up.

B) however, the prior art does not fairly teach or suggest in regard to claims 1, 11 & 15 a process in claim 1, a machine in claim 11, and a tangible non-transitory article/manufacture in claim 15 that provides the useful and beneficial function of monitoring the activity of an user by providing actions in claim 1 and structures in claims 1 & 15 that perform at least the functions of:

(1) assigning a dominant axis for an inertial sensor based upon the orientation of the inertial sensor;

(2) detecting a change in the orientation of the inertial sensor and updating the assigned dominant axis for the inertial sensor based upon the detected change in the orientation of the inertial sensor; and

(3) counting period motions by monitoring accelerations relative to the dominant axis of the inertial sensor.

Claims 2-5, which depend from claim 1, claims 12-14, which depend from claim 11, and claims 16-20, which depend from claim 15, are allowable for the same reason.

C) however, the prior art does not fairly teach or suggest in regard to claim 6 a process in claim 6, that provides the useful and beneficial function of monitoring the activity of an user by providing actions in claim 6 that perform at least the functions of:

(1) buffering a plurality of periodic motions;

(2) identifying or detecting the number of periodic motions within a cadence window or interval or duration from the buffered periodic motions; and

(3) counting the detected period motions in order to monitor an activity.

Claims 7-10, which depend from claim 6, are allowable for the same reason.

7. RELEVANT ART OF INTEREST

7.1 The Examiner has cited prior art of interest, for example:

A) either Kahn et al (2009/0043531 or 2009/0234614 or 2009/0319221 or 7,647,196 or 7,653,508 or 2010/0056872 or 7,753,861 or 7,881,902 or 7,987,070) are publications of a related applications with at least one common inventor and a latter effective date.

8. CONCLUSION

8.1 Any inquiry concerning this communication or earlier communications from the Examiner should be directed to Edward R. Cosimano whose telephone number is 571-272-0571. The Examiner can normally be reached on 571-272-0571 from 8:30am to 5:00pm.

8.2 If attempts to reach the Examiner by telephone are unsuccessful, the Examiner's supervisor, Andrew Schechter, can be reached on 571-272-2302. The fax phone number for the organization where this application or proceeding is assigned is 571-273-8300.

8.3 Information regarding the status of an application may be obtained from the Patent Application Information Retrieval (PAIR) system. Status information for published applications may be obtained from either Private PAIR or Public PAIR. Status information for unpublished applications is available through Private PAIR only. For more information about the PAIR system, see http://portal.uspto.gov/external/portal. Should you have questions on access to the Private PAIR system, contact the Electronic Business Center (EBC) at 866-217-9197 (toll-free).

ERC
01/21/2012

/Edward Cosimano/
Primary Examiner Unit 2857

Notice of References Cited	Application/Control No. 13/018,321	Applicant(s)/Patent Under Reexamination KAHN ET AL.	
	Examiner EDWARD COSIMANO	Art Unit 2857	Page 1 of 1

U.S. PATENT DOCUMENTS

*		Document Number Country Code-Number-Kind Code	Date MM-YYYY	Name	Classification
*	A	US-7,428,471	09-2008	Darley et al.	702/182
*	B	US-7,617,071	11-2009	Darley et al.	702/165
*	C	US-7,640,134	12-2009	Park et al.	702/141
*	D	US-7,962,312	06-2011	Darley et al.	702/165
	E	US-			
	F	US-			
	G	US-			
	H	US-			
	I	US-			
	J	US-			
	K	US-			
	L	US-			
	M	US-			

FOREIGN PATENT DOCUMENTS

*		Document Number Country Code-Number-Kind Code	Date MM-YYYY	Country	Name	Classification
	N					
	O					
	P					
	Q					
	R					
	S					
	T					

NON-PATENT DOCUMENTS

*		Include as applicable: Author, Title Date, Publisher, Edition or Volume, Pertinent Pages)
	U	
	V	
	W	
	X	

*A copy of this reference is not being furnished with this Office action. (See MPEP § 707.05(a).)
Dates in MM-YYYY format are publication dates. Classifications may be US or foreign.

	Type	L #	Hits	Search Text	DBs	Time Stamp
1	BRS	L1	151011	(dominant or principle or principal or major or critical or override or overridden or overriding or ((most or greatest or largest) near2 important)) near5 (axis or axies or direction or vector or orientate or orientated or orientating or orientation or incline or inclined or inclining or inclination)	US-PGPUB; USPAT; UPAD	2012/01/21 18:37
2	BRS	L2	19081	L1 near10 (inertial or ins or ims or gyro or gyroscope or acc or accel or accelerate or accelerated or accelerating or acceleration)	US-PGPUB; USPAT; UPAD	2012/01/21 18:38
3	BRS	L3	1157845	(drift or drifted or drifting or vary or variance or varied or varying or variation or deviate or deviated or deviating or deviation or offset or depart or departed or departing or change or changed or changing or chang$1r or alter or altered or altering or alteration or alter$1r or modify or modified or modifying or modification or modif$2r or delta or adjust or adjusted or adjusting or adjustment or adjust$1r or shift or shifted or shifting or shift$1r) near6 (axis or axies or direction of vector or orientate or orientated or orientating or orientation or incline or inclined or inclining or inclination)	US-PGPUB; USPAT; UPAD	2012/01/21 18:38

	Type	L #	Hits	Search Text	DBs	Time Stamp
4	BRS	L4	103994	L3 near6 (inertial or ins or ims or gyro or gyroscope or acc or accel or accelerate or accelerated or accelerating or acceleration)	US-PGPUB; USPAT; UPAD	2012/01/21 18:42
5	BRS	L5	1742	L1 near5 (update or updated or updating or updat$1r or correct or corrected or correcting or correction or correct$1r or compensate or compensated or compensating or compensation or compensat$1r or calibrate or calibrated or calibrating or calibration or calibrat$1r)	US-PGPUB; USPAT; UPAD	2012/01/21 18:42
6	BRS	L6	44	L4 same L5	US-PGPUB; USPAT; UPAD	2012/01/21 18:42
7	BRS	L7	194416	(count or counted or counting or number or numbered or numbering or increment or incremented or incrementing or accumulate or accumulated or accumulating or accumulation) near5 (motion or move or moved or moving or movements or acc or accel or accelerate or accelerated or accelerating or acceleration)	US-PGPUB; USPAT; UPAD	2012/01/21 18:42
8	BRS	L8	93	L1 near5 L7	US-PGPUB; USPAT; UPAD	2012/01/21 18:42
9	BRS	L9	3	L2 and L6 and L8	US-PGPUB; USPAT; UPAD	2012/01/21 18:43

	Type	L #	Hits	Search Text	DBs	Time Stamp
10	BRS	L10	713738	(motion or move or moved or moving or movement or walk or walking or run or running or jog or jogging or act or acting or action or active or activity or stride) near4 (number or numbered or numbering or count or counted or counting or accumulate or accumulated or accumulating or accumulation or at$1least or ((more or greater or larger or bigger) adj2 than) or plural or plurality or multiple or multi)	US-PGPUB; USPAT; UPAD	2012/01/21 18:43

	Type	L #	Hits	Search Text	DBs	Time Stamp
11	BRS	L11	168199	L10 near6 (measure or measured or measuring or measurement or monitor or monitored or monitoring or capture or captured or capturing or detect or detected or detecting or detection or detect$1r or sense or sensed or sensing or sens$1r or transduce or transduced or transducing or transducer or sample or sampled or sampling or sampl$1r or determine or determined or determining or determination or determin$1r or scan or scanned or scanning or scann$1r or met$1r or metered or metering or gauge or gauged or gauging or gaug$1r or gage or gaged or gaging or gag$1r or acquire or acquired or acquiring or acquisition or acquisitioning or acquir$1r or collect or collected or collecting or collection or collect$1r or log or logged or logging or logg$1r or record or recorded or recording or record$1r or accumulate or accumulated or accumulating or accumulation or accumulat$1r or register or registered or registering or registration or buffer or buffered or buffering or store or stored or storing or storage or memorize or memorized or memorizing or memorization or memory)	US-PGPUB; USPAT; UPAD	2012/01/21 18:43

	Type	L #	Hits	Search Text	DBs	Time Stamp
12	BRS	L12	34406	L10 near5 (judge or judged or judging or judgment or judgement or judg$1r or evaluate or evaluated or evaluating or evaluation or evaluat$1r or analysis or analyze or analyzed or analyzing or analyz$1r or allocate or allocated or allocating or allocation or allocat$1r or assign or assigned or assigning or assignment or assign$1r or id or identify or identifying or identified or identification or recogni$1e or recogni$1ed or recogni$1ing or recognition)	US-PGPUB; USPAT; UPAD	2012/01/21 18:43
13	BRS	L13	937506	(cadence or repeat or repeated or repeating or repetition or periodic or cycle or cyclic or cyclical or stride) near3 (criteria or criterion or criterium or threshold or limit or require or required or requiring or requirement or tolerance or window or range or band or qualify or qualified or qualifying or qualification or within or with$1in or standard or bench or bench$1mark or bench$1marked or bench$1marking or baseline or base or reference or period or time or timing or interval)	US-PGPUB; USPAT; UPAD	2012/01/21 18:43
14	BRS	L14	135	L12 near15 L13	US-PGPUB; USPAT; UPAD	2012/01/21 18:44

	Type	L #	Hits	Search Text	DBs	Time Stamp
15	BRS	L15	381391	(motion or move or moved or moving or movement or walk or walking or run or running or jog or jogging or act or acting or action or active or activity or stride) near4 (number or numbered or numbering or count or counted or counting or accumulate or accumulated or accumulating or accumulation)	US-PGPUB; USPAT; UPAD	2012/01/21 18:45
16	BRS	L16	1495063	(motion or move or moved or moving or movement or walk or walking or run or running or jog or jogging or act or acting or action or active or activity or stride) near4 (measure or measured or measuring or measurement or monitor or monitored or monitoring or capture or captured or capturing or detect or detected or detecting or detection or detect$1r or sense or sensed or sensing or sens$1r or transduce or transduced or transducing or transducer or sample or sampled or sampling or sampl$1r or determine or determined or determining or determination or determin$1r or scan or scanned or scanning or scann$1r or met$1r or metered or metering or gauge or gauged or gauging or gaug$1r or gage or gaged or gaging or gag$1r or acquire or acquired or acquiring or acquisition or acquisitioning or acquir$1r or collect or collected or collecting or collection or	US-PGPUB; USPAT; UPAD	2012/01/21 18:45

				collect$1r or log or logged or logging or logg$1r or accumulate or accumulated or accumulating or accumulation or accumulat$1r)		

	Type	L #	Hits	Search Text	DBs	Time Stamp
17	BRS	L17	42130	L15 near15 L16	US-PGPUB; USPAT; UPAD	2012/01/21 18:45
18	BRS	L18	41	L11 and L14 and L17	US-PGPUB; USPAT; UPAD	2012/01/21 18:45
19	BRS	L19	102	L1 near15 L15	US-PGPUB; USPAT; UPAD	2012/01/21 18:46
20	BRS	L20	3	L9 and L19	US-PGPUB; USPAT; UPAD	2012/01/21 18:46
21	BRS	L21	1841	(kahn$1.in. adj2 (p.in. or philippe.in.)) or ((kinsolving$1.in. or kingsolving$1.in.) adj2 (a.in. or arthur.in.)) or (christensen$1.in. adj2 (m.in. or mark.in.)) or (lee$1.in. adj2 (b.in. or brian.in. or brain.in.)) or (vogel$1.in. adj2 (d.in. or david.in.))	US-PGPUB; USPAT; UPAD	2012/01/21 18:46
22	BRS	L22	19	"13"$1"018"$1"321" or "12"$1"694"$1"135" or "7"$1"881"$1"902" or "11"$1"644"$1"455" or "7"$1"653"$1"508" or "60"$1"900"$1"412" or "60"$1"926"$1"027" or "11"$1"891"$1"112" or "2009"$1"0"$1"043"$1"531" or "7"$1"647"$1"196" or "12"$1"069"$1"267" or "12"$1"108"$1"486" or "2009"$1"0"$1"234"$1"614" or "7"$1"987"$1"070" or "12"$1"834"$1"845" or ("20090043531" or "20090234614" or "7647196" or "7653508" or "7881902" or "7987070").pn.	US-PGPUB; USPAT; UPAD	2012/01/21 18:46

	Type	L #	Hits	Search Text	DBs	Time Stamp
23	BRS	L23	1550	"4285041" or "4578769" or "5446725" or "5446775" or "5583776" or "5593431" or "5654619" or "5778882" or "5955667" or "5976083" or "6013007" or "6122595" or "6135951" or "6145389" or "6282496" or "20020023654" or "6353449" or "6369794" or "20020040601" or "20020089425" or "6428490" or "20020109600" or "20020116147" or "20020118121" or "20020151810" or "6493652" or "6496695" or "20030018430" or "20030023192" or "6513381" or "6522266" or "6532419" or "20030048218" or "6539336" or "20030083596" or "20030093248" or "20030109258" or "20030139692" or "6611789" or "20030208335" or "6644322" or "6700499" or "20040064286"	US-PGPUB; USPAT; UPAD	2012/01/21 18:46

	Type	L #	Hits	Search Text	DBs	Time Stamp
24	BRS	L24	504	"20040077954" or "6744403" or "20040107072" or "6771250" or "6786877" or "6790178" or "20040186695" or "6813582" or "20040225467" or "20040230138" or "6823036" or "20040236500" or "6826477" or "20040260191" or "6836744" or "20050021270" or "20050021292" or "20050033200" or "20050038626" or "6881191" or "6885971" or "6895341" or "6898550" or "20050132797" or "6928382" or "6941239" or "20050202934" or "20050210300" or "20050222801" or "20050232388" or "20050232404" or "6959259" or "20050238132" or "20050240375" or "20050245988" or "20050248718" or "6975959" or "6983219" or "20060017561" or "20060020177"	US-PGPUB; USPAT; UPAD	2012/01/21 18:46

	Type	L #	Hits	Search Text	DBs	Time Stamp
25	BRS	L25	306	"20060020421" or "7010332" or "20060063980" or "20060064276" or "20060100546" or "20060104018" or "7054784" or "7057551" or "20060136173" or "20060143645" or "7070571" or "7072789" or "20060149516" or "20060161377" or "20060167387" or "7092846" or "20060206258" or "20060223547" or "20060235642" or "20060259268" or "7145461" or "7148797" or "20060284979" or "20060288781" or "7158912" or "7169084" or "7171331" or "20070032951" or "7177684" or "20070038364" or "20070061105" or "20070063850" or "20070067094" or "20070073482" or "7200517" or "20070082789" or "7212943" or "7216053" or "7220220"	US-PGPUB; USPAT; UPAD	2012/01/21 18:46

	Type	L #	Hits	Search Text	DBs	Time Stamp
26	BRS	L26	217	"20070123806" or "20070125852" or "20070130582" or "20070142715" or "20070145680" or "20070150136" or "7254516" or "7255437" or "7263461" or "20070208530" or "20070208531" or "20070208544" or "20070213126" or "20070250261" or "20070259716" or "20070259717" or "20070260418" or "20070260482" or "7297088" or "20070276295" or "7313440" or "7328611" or "7334472" or "7353112" or "7382611" or "7387611" or "20080171918" or "7421369" or "7428471" or "7451056" or "7457719" or "7467060" or "20090015421" or "20090018773" or "20090047645" or "7512515" or "7526402" or "20090124348" or "7561960" or "20090213002" or "7586032"	US-PGPUB; USPAT; UPAD	2012/01/21 18:46
27	BRS	L27	51	"7608050" or "7617071" or "7627423" or "20090319221" or "7640134" or "7640804" or "7648441" or "7672781" or "20100056872" or "20100057398" or "7679601" or "7725139" or "7747409" or "7752011" or "7753861" or "7774156" or "7788071" or "7857772" or "7883445" or "7892080" or "7962312"	US-PGPUB; USPAT; UPAD	2012/01/21 18:46

	Type	L #	Hits	Search Text	DBs	Time Stamp
28	BRS	L28	729	(L2 or L6 or L8 or L11 or L14 or L17 or L19) and (L21 or L22 or L23 or L24 or L25 or L26 or L27)	US-PGPUB; USPAT; UPAD	2012/01/21 18:48
29	BRS	L29	758	L9 or L18 or L20 or L28	US-PGPUB; USPAT; UPAD	2012/01/21 18:48

Reviewed L29 Ti, Ab, Kwic All (NO NEW HITS)
Interference Search of L29

/ERC/
21 January 2012

Issue Classification	Application/Control No.	Applicant(s)/Patent Under Reexamination
	13018321	KAHN ET AL.
	Examiner	**Art Unit**
	EDWARD COSIMANO	2857

ORIGINAL		INTERNATIONAL CLASSIFICATION														
CLASS	SUBCLASS	CLAIMED					NON-CLAIMED									
702	160	G	0	1	C	22 / 00 (2006.01.01)										
CROSS REFERENCE(S)		G	0	1	C	25 / 00 (2006.01.01)										
		G	0	6	F	19 / 00 (2011.01.01)										
CLASS	SUBCLASS (ONE SUBCLASS PER BLOCK)	G	0	6	F	17 / 40 (2006.01.01)										
73	1.79															
377	17	24.2														
702	97	187	189													
708	105	200														

☐ Claims renumbered in the same order as presented by applicant ☐ CPA ☐ T.D. ☐ R.1.47

Final	Original	Final	Original	Final	Original	Final	Original	Final	Original	Final	Original	Final	Original	Final	Original
1	1	18	17												
2	2	19	18												
3	3	20	19												
4	4	17	20												
5	5														
6	6														
9	7														
10	8														
7	9														
8	10														
11	11														
12	12														
13	13														
14	14														
15	15														
16	16														

NONE		**Total Claims Allowed:**	
(Assistant Examiner)	(Date)	20	
/EDWARD COSIMANO/ Primary Examiner.Art Unit 2857	01/21/2012	O.G. Print Claim(s)	O.G. Print Figure
(Primary Examiner)	(Date)	1	8

Search Notes	Application/Control No.	Applicant(s)/Patent Under Reexamination
	13018321	KAHN ET AL.
	Examiner	**Art Unit**
	EDWARD COSIMANO	2857

SEARCHED			
Class	**Subclass**	**Date**	**Examiner**
33	700, 701	11/03/2011	ERC
73	1.01, 1.37, 1.38, 1.75, 1.76, 1.77, 1.78, 1.79, 1.81, 432.1, 865.4, 865.8	11/03/2011	ERC
377	1, 13, 15, 17, 19, 20, 24, 24.1, 24.2	11/03/2011	ERC
702	1, 85, 97, 104, 127, 141, 150, 155, 158, 160, 187, 189	11/03/2011	ERC
708	100, 101, 105, 131, 160, 200, 212	11/03/2011	ERC
Updated	above	01/21/2012	ERC

SEARCH NOTES		
Search Notes	**Date**	**Examiner**
Inventor Name Search; Continuity Check	10/28/2011	ERC
EAST (USOCR, USPAT, US-PGPUB, DERWENT, EPO, FPRS, JPO, IBM-TDB)	11/03/2011	ERC
Updated EAST search of 03 November 2011 with additional terms	01/21/2012	ERC

INTERFERENCE SEARCH			
Class	**Subclass**	**Date**	**Examiner**
73	1.01, 1.79	01/21/2012	ERC
377	1, 17, 19, 24, 24.2	01/21/2012	ERC
702	1, 85, 97, 127, 155, 158, 160, 187, 189	01/21/2012	ERC
708	100, 105, 200	01/21/2012	ERC

UNITED STATES PATENT AND TRADEMARK OFFICE

UNITED STATES DEPARTMENT OF COMMERCE
United States Patent and Trademark Office
Address: COMMISSIONER FOR PATENTS
P.O. Box 1450
Alexandria, Virginia 22313-1450
www.uspto.gov

BIB DATA SHEET

CONFIRMATION NO. 8340

SERIAL NUMBER	FILING or 371(c) DATE RULE	CLASS	GROUP ART UNIT	ATTORNEY DOCKET NO.
13/018,321	01/31/2011	702	2857	8689P027C2

APPLICANTS

Philippe Kahn, Aptos, CA;
Arthur Kinsolving, Santa Cruz, CA;
Mark Andrew Christensen, Santa Cruz, CA;
Brian Y. Lee, Aptos, CA;
David Vogel, Santa Cruz, CA;

**** CONTINUING DATA ***************************

This application is a CON of 12/694,135 01/26/2010 PAT 7,881,902 OK /ERC/
which is a CON of 11/644,455 12/22/2006 PAT 7,653,508

**** FOREIGN APPLICATIONS *************************** NONE /ERC/

**** IF REQUIRED, FOREIGN FILING LICENSE GRANTED ****

03/02/2011

Foreign Priority claimed ☐ Yes ☑ No 35 USC 119(a-d) conditions met ☐ Yes ☑ No Verified and Acknowledged /EDWARD R COSIMANO/ Examiner's Signature	☐ Met after Allowance Initials	STATE OR COUNTRY	SHEETS DRAWINGS	TOTAL CLAIMS	INDEPENDENT CLAIMS
		CA	9	20	4

ADDRESS

BLAKELY SOKOLOFF TAYLOR & ZAFMAN LLP
1279 OAKMEAD PARKWAY
SUNNYVALE, CA 94085-4040
UNITED STATES

TITLE

Human Activity Monitoring Device

FILING FEE RECEIVED		
1310	FEES: Authority has been given in Paper No._____ to charge/credit DEPOSIT ACCOUNT No._____ for following:	☐ All Fees ☐ 1.16 Fees (Filing) ☐ 1.17 Fees (Processing Ext. of time) ☐ 1.18 Fees (Issue) ☐ Other _____ ☐ Credit

BIB (Rev. 05/07).

	Type	L #	Hits	Search Text	DBs	Time Stamp
1	BRS	L1	200201	(dominant or principle or principal or major or critical or override or overridden or overriding or ((most or greatest or largest) near2 important)) near5 (axis or axies or direction or vector or orientate or orientated or orientating or orientation or incline or inclined or inclining or inclination)	US-PGPUB; USPAT; USOCR; FPRS; EPO; JPO; DERWENT; IBM_TDB	2012/01/21 17:36
2	BRS	L2	19981	L1 near10 (inertial or ins or ims or gyro or gyroscope or acc or accel or accelerate or accelerated or accelerating or acceleration)	US-PGPUB; USPAT; USOCR; FPRS; EPO; JPO; DERWENT; IBM_TDB	2012/01/21 17:36
3	BRS	L3	1807431	(drift or drifted or drifting or vary or variance or varied or varying or variation or deviate or deviated or deviating or deviation or offset or depart or departed or departing or change or changed or changing or chang$1r or alter or altered or altering or alteration or alter$1r or modify or modified or modifying or modification or modif$2r or delta or adjust or adjusted or adjusting or adjustment or adjust$1r or shift or shifted or shifting or shift$1r) near6 (axis or axies or direction of vector or orientate or orientated or orientating or orientation or incline or inclined or inclining or inclination)	US-PGPUB; USPAT; USOCR; FPRS; EPO; JPO; DERWENT; IBM_TDB	2012/01/21 17:36

	Type	L #	Hits	Search Text	DBs	Time Stamp
4	BRS	L4	112711	L3 near6 (inertial or ins or ims or gyro or gyroscope or acc or accel or accelerate or accelerated or accelerating or acceleration)	US-PGPUB; USPAT; USOCR; FPRS; EPO; JPO; DERWENT; IBM_TDB	2012/01/21 17:36
5	BRS	L5	2014	L1 near5 (update or updated or updating or updat$1r or correct or corrected or correcting or correction or correct$1r or compensate or compensated or compensating or compensation or compensat$1r or calibrate or calibrated or calibrating or calibration or calibrat$1r)	US-PGPUB; USPAT; USOCR; FPRS; EPO; JPO; DERWENT; IBM_TDB	2012/01/21 17:36
6	BRS	L6	48	L4 same L5	US-PGPUB; USPAT; USOCR; FPRS; EPO; JPO; DERWENT; IBM_TDB	2012/01/21 17:36
7	BRS	L7	270195	(count or counted or counting or number or numbered or numbering or increment or incremented or incrementing or accumulate or accumulated or accumulating or accumulation) near5 (motion or move or moved or moving or movements or acc or accel or accelerate or accelerated or accelerating or acceleration)	US-PGPUB; USPAT; USOCR; FPRS; EPO; JPO; DERWENT; IBM_TDB	2012/01/21 17:36

	Type	L #	Hits	Search Text	DBs	Time Stamp
8	BRS	L8	106	L1 near5 L7	US-PGPUB; USPAT; USOCR; FPRS; EPO; JPO; DERWENT; IBM_TDB	2012/01/21 17:36
9	BRS	L9	3	L2 and L6 and L8	US-PGPUB; USPAT; USOCR; FPRS; EPO; JPO; DERWENT; IBM_TDB	2012/01/21 17:36
10	BRS	L10	904141	(motion or move or moved or moving or movement or walk or walking or run or running or jog or jogging or act or acting or action or active or activity or stride) near4 (number or numbered or numbering or count or counted or counting or accumulate or accumulated or accumulating or accumulation or at$1least or ((more or greater or larger or bigger) adj2 than) or plural or plurality or multiple or multi)	US-PGPUB; USPAT; USOCR; FPRS; EPO; JPO; DERWENT; IBM_TDB	2012/01/21 17:39

	Type	L #	Hits	Search Text	DBs	Time Stamp
11	BRS	L11	202803	L10 near6 (measure or measured or measuring or measurement or monitor or monitored or monitoring or capture or captured or capturing or detect or detected or detecting or detection or detect$1r or sense or sensed or sensing or sens$1r or transduce or transduced or transducing or transducer or sample or sampled or sampling or sampl$1r or determine or determined or determining or determination or determin$1r or scan or scanned or scanning or scann$1r or met$1r or metered or metering or gauge or gauged or gauging or gaug$1r or gage or gaged or gaging or gag$1r or acquire or acquired or acquiring or acquisition or acquisitioning or acquir$1r or collect or collected or collecting or collection or collect$1r or log or logged or logging or logg$1r or record or recorded or recording or record$1r or accumulate or accumulated or accumulating or accumulation or accumulat$1r or register or registered or registering or registration or buffer or buffered or buffering or store or stored or storing or storage or memorize or memorized or memorizing or memorization or memory)	US-PGPUB; USPAT; USOCR; FPRS; EPO; JPO; DERWENT; IBM_TDB	2012/01/21 17:39

	Type	L #	Hits	Search Text	DBs	Time Stamp
12	BRS	L12	37666	L10 near5 (judge or judged or judging or judgment or judgement or judg$1r or evaluate or evaluated or evaluating or evaluation or evaluat$1r or analysis or analyze or analyzed or analyzing or analyz$1r or allocate or allocated or allocating or allocation or allocat$1r or assign or assigned or assigning or assignment or assign$1r or id or identify or identifying or identified or identification or recogni$1e or recogni$1ed or recogni$1ing or recognition)	US-PGPUB; USPAT; USOCR; FPRS; EPO; JPO; DERWENT; IBM_TDB	2012/01/21 17:40
13	BRS	L13	1152246	(cadence or repeat or repeated or repeating or repetition or periodic or cycle or cyclic or cyclical or stride) near3 (criteria or criterion or criterium or threshold or limit or require or required or requiring or requirement or tolerance or window or range or band or qualify or qualified or qualifying or qualification or within or with$1in or standard or bench or bench$1mark or bench$1marked or bench$1marking or baseline or base or reference or period or time or timing or interval)	US-PGPUB; USPAT; USOCR; FPRS; EPO; JPO; DERWENT; IBM_TDB	2012/01/21 17:41

	Type	L #	Hits	Search Text	DBs	Time Stamp
14	BRS	L14	149	L12 near15 L13	US-PGPUB; USPAT; USOCR; FPRS; EPO; JPO; DERWENT; IBM_TDB	2012/01/21 17:41
15	BRS	L15	472750	(motion or move or moved or moving or movement or walk or walking or run or running or jog or jogging or act or acting or action or active or activity or stride) near4 (number or numbered or numbering or count or counted or counting or accumulate or accumulated or accumulating or accumulation)	US-PGPUB; USPAT; USOCR; FPRS; EPO; JPO; DERWENT; IBM_TDB	2012/01/21 17:41

	Type	L #	Hits	Search Text	DBs	Time Stamp
16	BRS	L16	2139590	(motion or move or moved or moving or movement or walk or walking or run or running or jog or jogging or act or acting or action or active or activity or stride) near4 (measure or measured or measuring or measurement or monitor or monitored or monitoring or capture or captured or capturing or detect or detected or detecting or detection or detect$1r or sense or sensed or sensing or sens$1r or transduce or transduced or transducing or transducer or sample or sampled or sampling or sampl$1r or determine or determined or determining or determination or determin$1r or scan or scanned or scanning or scann$1r or met$1r or metered or metering or gauge or gauged or gauging or gaug$1r or gage or gaged or gaging or gag$1r or acquire or acquired or acquiring or acquisition or acquisitioning or acquir$1r or collect or collected or collecting or collection or collect$1r or log or logged or logging or logg$1r or accumulate or accumulated or accumulating or accumulation or accumulat$1r)	US-PGPUB; USPAT; USOCR; FPRS; EPO; JPO; DERWENT; IBM_TDB	2012/01/21 17:41
17	BRS	L17	49839	L15 near15 L16	US-PGPUB; USPAT; USOCR; FPRS; EPO; JPO; DERWENT; IBM_TDB	2012/01/21 17:41

18	BRS	L18	40	L11 and L14 and L17	US-PGPUB; USPAT; USOCR; FPRS; EPO; JPO; DERWENT; IBM_TDB	2012/01/21 17:41

	Type	L #	Hits	Search Text	DBs	Time Stamp
19	BRS	L19	122	L1 near15 L15	US-PGPUB; USPAT; USOCR; FPRS; EPO; JPO; DERWENT; IBM_TDB	2012/01/21 17:44
20	BRS	L20	3	L9 and L19	US-PGPUB; USPAT; USOCR; FPRS; EPO; JPO; DERWENT; IBM_TDB	2012/01/21 17:44
21	BRS	L21	29882	(kahn$1.in. adj2 (p.in. or philippe.in.)) or ((kinsolving$1.in. or kingsolving$1.in.) adj2 (a.in. or arthur.in.)) or (christensen$1.in. adj2 (m.in. or mark.in.)) or (lee$1.in. adj2 (b.in. or brian.in. or brain.in.)) or (vogel$1.in. adj2 (d.in. or david.in.))	US-PGPUB; USPAT; USOCR; FPRS; EPO; JPO; DERWENT; IBM_TDB	2012/01/21 17:45
22	BRS	L22	21	"13"$1"018"$1"321" or "12"$1"694"$1"135" or "7"$1"881"$1"902" or "11"$1"644"$1"455" or "7"$1"653"$1"508" or "60"$1"900"$1"412" or "60"$1"926"$1"027" or "11"$1"891"$1"112" or "2009"$1"0"$1"043"$1"531" or "7"$1"647"$1"196" or "12"$1"069"$1"267" or "12"$1"108"$1"486" or "2009"$1"0"$1"234"$1"614" or "7"$1"987"$1"070" or "12"$1"834"$1"845" or ("20090043531" or "20090234614" or "7647196" or "7653508" or "7881902" or "7987070").pn.	US-PGPUB; USPAT; USOCR; FPRS; EPO; JPO; DERWENT; IBM_TDB	2012/01/21 17:45

	Type	L #	Hits	Search Text	DBs	Time Stamp
23	BRS	L23	1575	"4285041" or "4578769" or "5446725" or "5446775" or "5583776" or "5593431" or "5654619" or "5778882" or "5955667" or "5976083" or "6013007" or "6122595" or "6135951" or "6145389" or "6282496" or "20020023654" or "6353449" or "6369794" or "20020040601" or "20020089425" or "6428490" or "20020109600" or "20020116147" or "20020118121" or "20020151810" or "6493652" or "6496695" or "20030018430" or "20030023192" or "6513381" or "6522266" or "6532419" or "20030048218" or "6539336" or "20030083596" or "20030093248" or "20030109258" or "20030139692" or "6611789" or "20030208335" or "6644322" or "6700499" or "20040064286"	US-PGPUB; USPAT; USOCR; FPRS; EPO; JPO; DERWENT; IBM_TDB	2012/01/21 17:46

	Type	L #	Hits	Search Text	DBs	Time Stamp
24	BRS	L24	538	"20040077954" or "6744403" or "20040107072" or "6771250" or "6786877" or "6790178" or "20040186695" or "6813582" or "20040225467" or "20040230138" or "6823036" or "20040236500" or "6826477" or "20040260191" or "6836744" or "20050021270" or "20050021292" or "20050033200" or "20050038626" or "6881191" or "6885971" or "6895341" or "6898550" or "20050132797" or "6928382" or "6941239" or "20050202934" or "20050210300" or "20050222801" or "20050232388" or "20050232404" or "6959259" or "20050238132" or "20050240375" or "20050245988" or "20050248718" or "6975959" or "6983219" or "20060017561" or "20060020177"	US-PGPUB; USPAT; USOCR; FPRS; EPO; JPO; DERWENT; IBM_TDB	2012/01/21 17:46

	Type	L #	Hits	Search Text	DBs	Time Stamp
25	BRS	L25	338	"20060020421" or "7010332" or "20060063980" or "20060064276" or "20060100546" or "20060104018" or "7054784" or "7057551" or "20060136173" or "20060143645" or "7070571" or "7072789" or "20060149516" or "20060161377" or "20060167387" or "7092846" or "20060206258" or "20060223547" or "20060235642" or "20060259268" or "7145461" or "7148797" or "20060284979" or "20060288781" or "7158912" or "7169084" or "7171331" or "20070032951" or "7177684" or "20070038364" or "20070061105" or "20070063850" or "20070067094" or "20070073482" or "7200517" or "20070082789" or "7212943" or "7216053" or "7220220"	US-PGPUB; USPAT; USOCR; FPRS; EPO; JPO; DERWENT; IBM_TDB	2012/01/21 17:46

	Type	L #	Hits	Search Text	DBs	Time Stamp
26	BRS	L26	255	"20070123806" or "20070125852" or "20070130582" or "20070142715" or "20070145680" or "20070150136" or "7254516" or "7255437" or "7263461" or "20070208530" or "20070208531" or "20070208544" or "20070213126" or "20070250261" or "20070259716" or "20070259717" or "20070260418" or "20070260482" or "7297088" or "20070276295" or "7313440" or "7328611" or "7334472" or "7353112" or "7382611" or "7387611" or "20080171918" or "7421369" or "7428471" or "7451056" or "7457719" or "7467060" or "20090015421" or "20090018773" or "20090047645" or "7512515" or "7526402" or "20090124348" or "7561960" or "20090213002" or "7586032"	US-PGPUB; USPAT; USOCR; FPRS; EPO; JPO; DERWENT; IBM_TDB	2012/01/21 17:46
27	BRS	L27	73	"7608050" or "7617071" or "7627423" or "20090319221" or "7640134" or "7640804" or "7648441" or "7672781" or "20100056872" or "20100057398" or "7679601" or "7725139" or "7747409" or "7752011" or "7753861" or "7774156" or "7788071" or "7857772" or "7883445" or "7892080" or "7962312"	US-PGPUB; USPAT; USOCR; FPRS; EPO; JPO; DERWENT; IBM_TDB	2012/01/21 17:47

	Type	L #	Hits	Search Text	DBs	Time Stamp
28	BRS	L28	748	(L2 or L6 or L8 or L11 or L14 or L17 or L19) and (L21 or L22 or L23 or L24 or L25 or L26 or L27)	US-PGPUB; USPAT; USOCR; FPRS; EPO; JPO; DERWENT; IBM_TDB	2012/01/21 17:48
29	BRS	L29	777	L9 or L18 or L20 or L28	US-PGPUB; USPAT; USOCR; FPRS; EPO; JPO; DERWENT; IBM_TDB	2012/01/21 17:48
30	BRS	L30	1953	("20030018430" or "6826477").pn. or ((@pd>="19470101" and @pd<="19710101") and (33/700 or 33/701 or 73/1.01 or 73/1.37 or 73/1.38 or 73/1.75 or 73/1.76 or 73/1.77 or 73/1.78 or 73/1.79 or 73/1.81 or 73/432.1 or 73/865.4 or 73/865.8 or 377/1 or 377/13 or 377/15 or 377/17 or 377/19 or 377/20 or 377/24 or 377/24.1 or 377/24.2 or 702/1 or 702/85 or 702/97 or 702/104 or 702/127 or 702/141 or 702/150 or 702/155 or 702/158 or 702/160 or 702/187 or 702/189 or 708/100 or 708/101 or 708/105 or 708/131 or 708/160 or 708/200 or 708/212).ccls.)	US-PGPUB; USPAT; USOCR; FPRS; EPO; JPO; DERWENT; IBM_TDB	2012/01/21 17:54

Reviewed L29 Ti, Ab, Kwic All
Reviewed L30 Ti All
Interference Search of L29 & L30

/ERC/
21 January 2012

	Document ID	Publication Date	Inventor	Current OR	Current XRef	Pages
1	US 5976083 A	19991102	Richardson; J. Jeffrey et al.	600/300	482/8; 482/901; 600/481; 600/587	34
2	US 6135951 A	20001024	Richardson; J. Jeffrey et al.	600/300	482/8; 600/592; 600/595	32
3	US 6145389 A	20001114	Ebeling; W. H. Carl et al.	73/865.4		14
4	US 6369794 B1	20020409	Sakurai; Yasuhiro et al.	345/156	379/433.04	37
5	US 20020089425 A1	20020711	Kubo, Nobuo et al.	340/573.1	340/669	28
6	US 6611789 B1	20030826	Darley; Jesse	702/160	702/141; 702/142; 702/176	87
7	US 6700499 B2	20040302	Kubo; Nobuo et al.	340/686.1	340/573.1; 340/573.7; 482/3; 482/74; 600/510; 600/552; 600/553; 73/379.01; 73/379.09	27
8	US 20050232388 A1	20051020	Tsuji, Tomoharu	377/24.2		10
9	US 20050238132 A1	20051027	Tsuji, Tomoharu	377/24.2		10

L29 Results

/ERC/
21 January 2012

	Document ID	Publication Date	Inventor	Current OR	Current XRef	Pages
10	US 20060020177 A1	20060126	Seo; Jeong-Wook et al.	600/300	482/8; 600/595	90
11	US 7169084 B2	20070130	Tsuji; Tomoharu	482/8	482/1; 482/9; 702/160	9
12	US 20070061105 A1	20070315	Darley; Jesse et al.	702/182		86
13	US 20070067094 A1	20070322	Park; Kyong-Ha et al.	701/200	702/141	13
14	US 20070208531 A1	20070906	Darley; Jesse et al.	702/142	702/158; 702/178	86
15	US 7297088 B2	20071120	Tsuji; Tomoharu	482/3	377/24.2; 482/8; 482/900; 702/160	10
16	US 7334472 B2	20080226	Seo; Jeong-Wook et al.	73/379.01		89
17	US 7428471 B2	20080923	Darley; Jesse et al.	702/182	36/132; 36/136; 377/23; 377/24.2; 702/141; 702/142; 702/144; 702/160; 702/176; 73/597	83
18	US 7457719 B1	20081125	Kahn; Philippe et al.	702/141		16

L29 Results

/ERC/
21 January 2012

	Document ID	Publication Date	Inventor	Current OR	Current XRef	Pages
19	US 20090043531 A1	20090212	Kahn; Philippe et al.	702/149		22
20	US 20090234614 A1	20090917	Kahn; Philippe et al.	702/141	351/158	18
21	US 7617071 B2	20091110	Darley; Jesse et al.	702/165	702/142; 702/158; 702/160; 702/176; 73/597	82
22	US 20090319221 A1	20091224	Kahn; Philippe et al.	702/141		31
23	US 7640134 B2	20091229	Park; Kyong-Ha et al.	702/141	600/587; 600/592; 600/595; 73/491; 73/865.4	13
24	US 7647196 B2	20100112	Kahn; Philippe et al.	702/149	702/142; 702/150; 702/154	22
25	US 7653508 B1	20100126	Kahn; Philippe et al.	702/160	33/700; 377/1; 377/13; 377/24.2; 377/25; 702/1; 702/127; 702/155; 702/158; 702/187; 702/189	19

L29 Results

/ERC/
21 January 2012

	Document ID	Publication Date	Inventor	Current OR	Current XRef	Pages
26	US 20100057398 A1	20100304	Darley; Jesse et al.	702/160	702/142	85
27	US 20100056872 A1	20100304	Kahn; Philippe et al.	600/300		22
28	US 7753861 B1	20100713	Kahn; Philippe et al.	600/595	482/8; 482/9; 600/300; 600/301; 600/587	24
29	US 7881902 B1	20110201	Kahn; Philippe et al.	702/160	377/24.2; 702/97	19
30	US 7962312 B2	20110614	Darley; Jesse et al.	702/165	702/142; 702/158; 702/160; 702/176; 73/597	84
31	US 7987070 B2	20110726	Kahn; Philippe et al.	702/160	351/41; 73/1.38	19

L29 Results

/ERC/
21 January 2012

	Document ID	Publication Date	Inventor	Current OR	Current XRef	Pages
1	US 20030018430 A1	20030123	Ladetto, Quentin et al.	701/217	701/200	56
2	US 6826477 B2	20041130	Ladetto; Quentin et al.	701/217	340/944; 701/200; 701/213; 73/178R	58

L30 Results

/ERC/
21 January 2012

Index of Claims	Application/Control No.	Applicant(s)/Patent Under Reexamination
	13018321	KAHN ET AL.
	Examiner	**Art Unit**
	EDWARD COSIMANO	2857

✓	Rejected	-	Cancelled	N	Non-Elected	A	Appeal
=	Allowed	÷	Restricted	I	Interference	O	Objected

☐ Claims renumbered in the same order as presented by applicant ☐ CPA ☐ T.D. ☐ R.1.47

CLAIM		DATE								
Final	Original	11/04/2011	01/21/2012							
1	1	=	=							
2	2	=	=							
3	3	=	=							
4	4	=	=							
5	5	=	=							
6	6	=	=							
9	7	=	=							
10	8	=	=							
7	9	=	=							
8	10	=	=							
11	11	=	=							
12	12	=	=							
13	13	=	=							
14	14	=	=							
15	15	=	=							
16	16	=	=							
18	17	=	=							
19	18	=	=							
20	19	=	=							
17	20	=	=							

Receipt date: 01/09/2012

Substitute for Form 1449/PTO				Complete if Known	
INFORMATION DISCLOSURE STATEMENT BY APPLICANT *(use as many sheets as necessary)*				Application Number	13/018,321
				Filing Date	January 31, 2011
				First Named Inventor:	Philippe Kahn
				Art Unit	2857
				Examiner Name	Cosimano, Edward R
Sheet	1	**of**	1	Attorney Docket Number	8689P027C2

U.S. PATENT DOCUMENTS

Examiner Initials*	Cite No.[1]	Document Number		Publication Date MM-DD-YYYY	Name of Patentee or Applicant of Cited Document	Pages, Columns, Lines, Where Relevant Passages or Relevant Figures Appear
		Number	Kind Code[2] (If known)			
		US-	7,892,080	2/22/2011	Dahl, Fredrik Andreas	
		US-	2005/0245988	11/3/2005	Miesel, Keith A.	
		US-	2006/0149516	7/6/2006	Bond et al	
		US-	2007/0145680	6/28/2007	Rosenberg, Louis B	
		US-	2007/0259717	11/8/2007	Mattice et al	
		US-	2009/0124348	5/14/2009	Yoseloff et al	
		US-				
		US-				
		US-				
		US-				
		US-				
		US-				
		US-				
		US-				
		US-				
		US-				
		US-				
		US-				
		US-				
		US-				
		US-				
		US-				
		US-				
		US-				
		US-				
		US-				
		US-				
		US-				
		US-				

Examiner Signature		Date Considered	

*EXAMINER: Initial if reference considered, whether or not citation is in conformance with MPEP 609; Draw line through citation if not in conformance and not considered. Include copy of this form with next communication to applicant. [1]Applicant's unique citation designation number (optional). [2]See Kinds Codes of USPTO Patent Documents at www.uspto.gov or MPEP 901.04. [3]Enter Office that issued the document, by the two-letter code (WIPO Standard ST.3). [4]For Japanese patent documents, the indication of the year of reign of the Emperor must precede the serial number of the patent document. [5]Kind of document by the appropriate symbols as indicated on the document under WIPO Standard ST. 16 if possible. [6]Applicant is to place a check mark here if English language translation is attached.

This collection of information is required by 37 CFR 1.97 and 1.98. The information is required to obtain or retain a benefit by the public which is to file (and by the USPTO to process) an application. Confidentiality is governed by 35 U.S.C. 122 and 37 CFR 1.14. This collection is estimated to take 2 hours to complete including gathering, preparing, and submitting the completed application form to the USPTO. Time will vary depending upon the individual case. Any comments on the amount of time you require to complete this form and/or suggestions for reducing this burden, should be sent to the Chief Information Officer, U.S. Patent and Trademark Office, P.O. Box 1450, Alexandria, VA 22313-1450. DO NOT SENT FEES OR COMPLETED FORMS TO THIS ADDRESS. **SEND TO: Commissioner for Patents, P.O. Box 1450, Alexandria, Virginia 22313-1450.**

If you need assistance in completing the form, call 1-800-PTO-9199 (1-800-786-9199) and select option 2.

Attorney's Docket No. 8689P027C2 PATENT

IN THE UNITED STATES PATENT AND TRADEMARK OFFICE

Applicant	: Philippe Kahn, et al.	Examiner:	Cosimano, Edward R
Appl. No.	: 13/018,321	Art Unit:	2857
Filed	: January 31, 2011	Conf No:	8340
For	: Human Activity Monitoring Device		
Customer No.	: 08791		

CERTIFICATE OF TRANSMISSION
I hereby certify that this correspondence is being submitted electronically via EFS Web on the date shown below.

/Judith Szepesi/ January 9, 2012
Judith A. Szepesi ***Date***

Mail Stop Amendment
Commissioner for Patents
P.O. Box 1450
Alexandria, Virginia 22313-1450

AMENDMENT

Sir:

In response to the Office Action of November 8, 2011, applicants respectfully request the Examiner to enter the following amendments and consider the following remarks:

Amendments to the Specification begin on page 2 of this paper.

Remarks/Arguments begin on page 5 of this paper.

Amendments to the Specification:

Please replace paragraphs [0001], [0023], [0025], [0029], [0040], [0067] with the following amended paragraphs:

[0001] The present patent application is a continuation of U.S. Application No. 12/694,135, filed on January 26, 2010, now U.S. Patent No. 7,881,902, ~~to issue~~ issued on February 1, 2011; which is a continuation of U.S. Application No. 11/644,455, filed on December 22, 2006, now U.S. Patent No. 7,653,508, issued on January 26, 2010.

[0023] Referring to **Figure 1**, the cadence logic 132 may determine one or more sample periods to be used by the rolling average logic 135, and may determine a cadence window 150 to be used by the step counting logic 130. In one embodiment, the cadence logic ~~135~~ 132 detects a period and/or cadence of a motion cycle. The period and/or cadence of the motion cycle may be based upon user activity (e.g. rollerblading, biking, running, walking, etc.).

[0025] **Figure 2** illustrates an exemplary motion cycle graph ~~201~~ 200 that measures time versus acceleration, in accordance with one embodiment of the present invention. The exemplary motion-cycle graph ~~201~~ 200 shows acceleration data taken with a single tri-axis inertial senor. The acceleration at a given ~~period of~~ time is represented for a first axis 203, a second axis 205, and a third axis 207. In one embodiment, the cadence logic ~~135~~ 132 of **Figure 1** analyzes the acceleration along the first axis 203, second axis 205 and third axis 207 to detect a motion cycle. Once a motion cycle is detected, a period of the motion cycle is determined, and a cadence of the motion cycle is determined. **Figure 2** shows an exemplary period of a motion cycle 210 for the third axis 207, the period 215 being approximately 0.6 seconds. The same period can also be seen to a lesser degree in the second axis 205 and the first axis 203. The corresponding cadence to the motion cycle is approximately one hundred motion cycles per minute.

[0029] Returning to **Figure 2**, cadence windows may be used to count steps until an expected step is not encountered. In one embodiment, new cadence windows

are determined periodically. In one embodiment, the cadence window is a dynamic cadence window that continuously updates as a user's cadence changes. For example, using a dynamic cadence window, a new cadence window length may be set after each step. [[(.]] The cadence window minimums may be determined by subtracting a value from the stepping period, and the cadence window maximums may be determined by adding a value to the stepping period. In one embodiment, the cadence window maximums are preset, and the cadence window minimums are updated after each step is counted. In one embodiment, the cadence window minimums are preset, and the cadence window maximums are updated after each step is counted. In one embodiment, both the cadence window minimums and cadence window maximums are updated when a step is counted. In one embodiment, the current cadence window minimum is determined by subtracting 200 ms from the current stepping cadence period. In one embodiment, the cadence window minimum has a minimum value of 240 ms.

[0040] Returning to **Figure 1**, the step counting logic 130 may include a measurement selection logic 145, a cadence window 150, a measurement comparator 155, a threshold comparator 160, a step count buffer 165, and a mode logic 190. The measurement selection logic 145 may determine which measurements ~~from the measurement buffer 125~~ to use to determine if a step has occurred. In one embodiment, the measurement selection logic 145 may monitor accelerations relative to the dominant axis, and select only those measurements with specific relations to the dominant axis for measurement. For example, only accelerations that are approximately parallel to the dominant axis may be selected, or alternatively, only accelerations that are approximately perpendicular to the dominant axis may be selected. In one embodiment, the measurement selection logic 145 selects only measurements of acceleration data along the dominant axis. In alternative embodiments, measurements of acceleration data along other axes may also be used. In one embodiment, measurements of acceleration along only the other axes are used.

[0067] At block 540, processing logic determines whether any relevant acceleration is detected. If no relevant acceleration is detected, then sleep mode is

initiated (block 544). If some relevant acceleration is detected, then processing logic returns to block 510 to await recognition of another first step. If at block ~~540~~ 524 an additional step was recognized, the process continues to block 560.

LGE v. Uniloc USA Page 272 of 454 LGE Exhibit 1002

Remarks/Arguments

Applicants respectfully request consideration of the subject application as amended herein. This Amendment is submitted in response to the Office Action mailed November 8, 2011. Claims 1-20 are objected to. In this Amendment, no claims have been amended, canceled, or added.

Applicants thank the Examiner for the careful examination of the claims and the Specification, as well as the suggestions for how to correct the minor informalities in the text and drawings.

Applicants have amended the Specification in accordance with the Examiner's suggestion, to correct primarily typographic mistakes. Applicants therefore submit that the Specification, as amended, corrects the errors objected to in connection with the drawings and the specification. Applicants further submit that these amendments do not add new matter.

Applicant respectfully submits that in view of the amendments and discussion set forth herein, the applicable objections have been overcome. Accordingly, the present and amended claims should be found to be in condition for allowance.

If a telephone interview would expedite the prosecution of this application, the Examiner is invited to contact Judith A. Szepesi at (408) 720-8300.

If there are any additional charges/credits, please charge/credit our deposit account no. 02-2666.

Respectfully submitted,

BLAKELY, SOKOLOFF, TAYLOR & ZAFMAN LLP

Dated: January 9, 2012

/Judith Szepesi/
Judith A. Szepesi
Reg. No. 39,393

1279 Oakmead Parkway
Sunnyvale, CA 94085
(408) 720-8300

IN THE UNITED STATES PATENT AND TRADEMARK OFFICE

Applicant	: Philippe Kahn, et al.	Examiner:	Cosimano, Edward R
Appl. No.	: 13/018,321	Art Unit:	2857
Filed	: January 31, 2011	Conf No:	8340
For	: Human Activity Monitoring Device		
Customer No.	: 08791		

CERTIFICATE OF TRANSMISSION
I hereby certify that this correspondence is being submitted electronically via EFS Web on the date shown below.

/Judith Szepesi/ January 9, 2012
Judith A. Szepesi ***Date***

Mail Stop Amendment
Commissioner for Patents
P.O. Box 1450
Alexandria, Virginia 22313-1450

INFORMATION DISCLOSURE STATEMENT

Sir:

Enclosed is a copy of Information Disclosure Citation Form PTO-1449 or PTO/SB/08 together with copies of the documents cited on that form, except for copies not required to be submitted (e.g., copies of U.S. patents and U.S. published patent applications need not be enclosed). It is respectfully requested that the cited documents be considered and that the enclosed copy of Information Disclosure Citation Form PTO-1449 or PTO/SB/08 be initialed by the Examiner to indicate such consideration and a copy thereof returned to applicant(s).

Pursuant to 37 C.F.R. § 1.97, the submission of this Information Disclosure Statement is not to be construed as a representation that a search has been made and is not to be construed as an admission that the information cited in this statement is material to patentability.

Pursuant to 37 C.F.R. § 1.97, this Information Disclosure Statement is being submitted under one of the following (as indicated by an "X" to the left of the appropriate paragraph):

_____ 37 C.F.R. §1.97(b).

__X__ 37 C.F.R. §1.97(c). If so, then enclosed with this Information Disclosure Statement is one of the following:

____ A statement pursuant to 37 C.F.R. §1.97(e) or

__X__ The Director is Authorized to charge in the amount of $180.00 for the fee under 37 C.F.R. § 1.17(p).

_____ 37 C.F.R. §1.97(d). If so, then enclosed with this Information Disclosure Statement are the following:

(1) A statement pursuant to 37 C.F.R. §1.97(e); and

(2) A check for $180.00 for the fee under 37 C.F.R. §1.17(p) for submission of the Information Disclosure Statement.

If there are any additional charges, please charge Deposit Account No. 02-2666.

Respectfully submitted,

BLAKELY, SOKOLOFF, TAYLOR & ZAFMAN LLP

Dated: January 9, 2012

/Judith Szepesi/
Judith A. Szepesi
Reg. No. 39,393

1279 Oakmead Parkway
Sunnyvale, CA 94085
(408) 720-8300

Substitute for Form 1449/PTO				Complete if Known	
INFORMATION DISCLOSURE STATEMENT BY APPLICANT *(use as many sheets as necessary)*				Application Number	13/018,321
				Filing Date	January 31, 2011
				First Named Inventor:	Philippe Kahn
				Art Unit	2857
				Examiner Name	Cosimano, Edward R
Sheet	1	**of**	1	Attorney Docket Number	8689P027C2

U.S. PATENT DOCUMENTS

Examiner Initials*	Cite No.[1]	Document Number Number-Kind Code[2] (If known)		Publication Date MM-DD-YYYY	Name of Patentee or Applicant of Cited Document	Pages, Columns, Lines, Where Relevant Passages or Relevant Figures Appear
		US-	7,892,080	2/22/2011	Dahl, Fredrik Andreas	
		US-	2005/0245988	11/3/2005	Miesel, Keith A.	
		US-	2006/0149516	7/6/2006	Bond et al	
		US-	2007/0145680	6/28/2007	Rosenberg, Louis B	
		US-	2007/0259717	11/8/2007	Mattice et al	
		US-	2009/0124348	5/14/2009	Yoseloff et al	
		US-				
		US-				
		US-				
		US-				
		US-				
		US-				
		US-				
		US-				
		US-				
		US-				
		US-				
		US-				
		US-				
		US-				
		US-				
		US-				
		US-				
		US-				
		US-				
		US-				
		US-				

Examiner Signature		Date Considered	

*EXAMINER: Initial if reference considered, whether or not citation is in conformance with MPEP 609; Draw line through citation if not in conformance and not considered. Include copy of this form with next communication to applicant. [1]Applicant's unique citation designation number (optional). [2]See Kinds Codes of USPTO Patent Documents at www.uspto.gov or MPEP 901.04. [3]Enter Office that issued the document, by the two-letter code (WIPO Standard ST.3). [4]For Japanese patent documents, the indication of the year of reign of the Emperor must precede the serial number of the patent document. [5]Kind of document by the appropriate symbols as indicated on the document under WIPO Standard ST. 16 if possible. [6]Applicant is to place a check mark here if English language translation is attached.

This collection of information is required by 37 CFR 1.97 and 1.98. The information is required to obtain or retain a benefit by the public which is to file (and by the USPTO to process) an application. Confidentiality is governed by 35 U.S.C. 122 and 37 CFR 1.14. This collection is estimated to take 2 hours to complete including gathering, preparing, and submitting the completed application form to the USPTO. Time will vary depending upon the individual case. Any comments on the amount of time you require to complete this form and/or suggestions for reducing this burden, should be sent to the Chief Information Officer, U.S. Patent and Trademark Office, P.O. Box 1450, Alexandria, VA 22313-1450. DO NOT SENT FEES OR COMPLETED FORMS TO THIS ADDRESS. **SEND TO: Commissioner for Patents, P.O. Box 1450, Alexandria, Virginia 22313-1450.**

If you need assistance in completing the form, call 1-800-PTO-9199 (1-800-786-9199) and select option 2.

Electronic Patent Application Fee Transmittal	
Application Number:	13018321
Filing Date:	31-Jan-2011
Title of Invention:	Human Activity Monitoring Device
First Named Inventor/Applicant Name:	Philippe Kahn
Filer:	Judith A. Szepesi/Joan Abriam
Attorney Docket Number:	8689P027C2
Filed as Large Entity	

Utility under 35 USC 111(a) Filing Fees

Description	Fee Code	Quantity	Amount	Sub-Total in USD($)
Basic Filing:				
Pages:				
Claims:				
Miscellaneous-Filing:				
Petition:				
Patent-Appeals-and-Interference:				
Post-Allowance-and-Post-Issuance:				
Extension-of-Time:				

Description	Fee Code	Quantity	Amount	Sub-Total in USD($)
Miscellaneous:				
Submission- Information Disclosure Stmt	1806	1	180	180
		Total in USD ($)		**180**

Electronic Acknowledgement Receipt	
EFS ID:	11795651
Application Number:	13018321
International Application Number:	
Confirmation Number:	8340
Title of Invention:	Human Activity Monitoring Device
First Named Inventor/Applicant Name:	Philippe Kahn
Customer Number:	8791
Filer:	Judith A. Szepesi
Filer Authorized By:	
Attorney Docket Number:	8689P027C2
Receipt Date:	09-JAN-2012
Filing Date:	31-JAN-2011
Time Stamp:	21:17:57
Application Type:	Utility under 35 USC 111(a)

Payment information:

Submitted with Payment	yes
Payment Type	Deposit Account
Payment was successfully received in RAM	$180
RAM confirmation Number	7327
Deposit Account	022666
Authorized User	

File Listing:

Document Number	Document Description	File Name	File Size(Bytes)/ Message Digest	Multi Part /.zip	Pages (if appl.)

1		8689P027C2_AmResp_Jan2012.pdf	31947 6d742aad014de49df83c4d6a7098107fd4257569	yes	5

	Multipart Description/PDF files in .zip description		
	Document Description	**Start**	**End**
	Response after Ex Parte Quayle Action	1	1
	Specification	2	4
	Claims	5	5

Warnings:					
Information:					
2		8689P027C2_IDS_and_SB08.pdf	51985 dfe4d64f20d8f4f13b212d7422db6c248a805f15	yes	3

	Multipart Description/PDF files in .zip description		
	Document Description	**Start**	**End**
	Transmittal Letter	1	2
	Information Disclosure Statement (IDS) Form (SB08)	3	3

Warnings:					
Information:					
3	Fee Worksheet (SB06)	fee-info.pdf	29967 03883a2ede87644561f0960443363b6aa968d84c	no	2
Warnings:					
Information:					
		Total Files Size (in bytes):	113899		

This Acknowledgement Receipt evidences receipt on the noted date by the USPTO of the indicated documents, characterized by the applicant, and including page counts, where applicable. It serves as evidence of receipt similar to a Post Card, as described in MPEP 503.

New Applications Under 35 U.S.C. 111
If a new application is being filed and the application includes the necessary components for a filing date (see 37 CFR 1.53(b)-(d) and MPEP 506), a Filing Receipt (37 CFR 1.54) will be issued in due course and the date shown on this Acknowledgement Receipt will establish the filing date of the application.

National Stage of an International Application under 35 U.S.C. 371
If a timely submission to enter the national stage of an international application is compliant with the conditions of 35 U.S.C. 371 and other applicable requirements a Form PCT/DO/EO/903 indicating acceptance of the application as a national stage submission under 35 U.S.C. 371 will be issued in addition to the Filing Receipt, in due course.

New International Application Filed with the USPTO as a Receiving Office
If a new international application is being filed and the international application includes the necessary components for an international filing date (see PCT Article 11 and MPEP 1810), a Notification of the International Application Number and of the International Filing Date (Form PCT/RO/105) will be issued in due course, subject to prescriptions concerning national security, and the date shown on this Acknowledgement Receipt will establish the international filing date of the application.

UNITED STATES PATENT AND TRADEMARK OFFICE

UNITED STATES DEPARTMENT OF COMMERCE
United States Patent and Trademark Office
Address: COMMISSIONER FOR PATENTS
P.O. Box 1450
Alexandria, Virginia 22313-1450
www.uspto.gov

APPLICATION NO.	FILING DATE	FIRST NAMED INVENTOR	ATTORNEY DOCKET NO.	CONFIRMATION NO.
13/018,321	01/31/2011	Philippe Kahn	8689P027C2	8340

8791 7590 11/08/2011

BLAKELY SOKOLOFF TAYLOR & ZAFMAN LLP
1279 OAKMEAD PARKWAY
SUNNYVALE, CA 94085-4040

EXAMINER	
COSIMANO, EDWARD R	
ART UNIT	PAPER NUMBER
2857	
MAIL DATE	DELIVERY MODE
11/08/2011	PAPER

Please find below and/or attached an Office communication concerning this application or proceeding.

The time period for reply, if any, is set in the attached communication.

Office Action Summary	Application No.	Applicant(s)	
	13/018,321	KAHN ET AL.	
	Examiner	Art Unit	
	EDWARD COSIMANO	2857	

-- The MAILING DATE of this communication appears on the cover sheet with the correspondence address --

Period for Reply

A SHORTENED STATUTORY PERIOD FOR REPLY IS SET TO EXPIRE 2 MONTH(S) OR THIRTY (30) DAYS, WHICHEVER IS LONGER, FROM THE MAILING DATE OF THIS COMMUNICATION.

- Extensions of time may be available under the provisions of 37 CFR 1.136(a). In no event, however, may a reply be timely filed after SIX (6) MONTHS from the mailing date of this communication.
- If NO period for reply is specified above, the maximum statutory period will apply and will expire SIX (6) MONTHS from the mailing date of this communication.
- Failure to reply within the set or extended period for reply will, by statute, cause the application to become ABANDONED (35 U.S.C. § 133). Any reply received by the Office later than three months after the mailing date of this communication, even if timely filed, may reduce any earned patent term adjustment. See 37 CFR 1.704(b).

Status

1)☒ Responsive to communication(s) filed on *31 January 2011*.

2a)☐ This action is **FINAL**. 2b)☐ This action is non-final.

3)☐ An election was made by the applicant in response to a restriction requirement set forth during the interview on _____; the restriction requirement and election have been incorporated into this action.

4)☒ Since this application is in condition for allowance except for formal matters, prosecution as to the merits is closed in accordance with the practice under *Ex parte Quayle*, 1935 C.D. 11, 453 O.G. 213.

Disposition of Claims

5)☒ Claim(s) *1-20* is/are pending in the application.

5a) Of the above claim(s) *none* is/are withdrawn from consideration.

6)☒ Claim(s) *1-20* is/are allowed.

7)☐ Claim(s) _____ is/are rejected.

8)☐ Claim(s) _____ is/are objected to.

9)☐ Claim(s) _____ are subject to restriction and/or election requirement.

Application Papers

10)☒ The specification is objected to by the Examiner.

11)☒ The drawing(s) filed on *31 January 2011* is/are: a)☐ accepted or b)☒ objected to by the Examiner.

Applicant may not request that any objection to the drawing(s) be held in abeyance. See 37 CFR 1.85(a).

Replacement drawing sheet(s) including the correction is required if the drawing(s) is objected to. See 37 CFR 1.121(d).

12)☐ The oath or declaration is objected to by the Examiner. Note the attached Office Action or form PTO-152.

Priority under 35 U.S.C. § 119

13)☐ Acknowledgment is made of a claim for foreign priority under 35 U.S.C. § 119(a)-(d) or (f).

a)☐ All b)☐ Some * c)☐ None of:

1.☐ Certified copies of the priority documents have been received.

2.☐ Certified copies of the priority documents have been received in Application No. _____.

3.☐ Copies of the certified copies of the priority documents have been received in this National Stage application from the International Bureau (PCT Rule 17.2(a)).

* See the attached detailed Office action for a list of the certified copies not received.

Attachment(s)

1) ☒ Notice of References Cited (PTO-892)
2) ☐ Notice of Draftsperson's Patent Drawing Review (PTO-948)
3) ☒ Information Disclosure Statement(s) (PTO/SB/08) Paper No(s)/Mail Date *1/31/11; 5/16/11; 7/21/11*.
4) ☐ Interview Summary (PTO-413) Paper No(s)/Mail Date. _____ .
5) ☐ Notice of Informal Patent Application
6) ☐ Other: _____.

1. EXAMINER'S COMMENT

1.1 When preparing this Office action the Examiner considers the instant application to include:

A) the copy of the Oath/Declaration from grandparent application serial number 11/644,455 which was filed on 31 January 2011 and that is acceptable to the Examiner;

B) the content of the Abstract which was filed on 31 August 2011 and that is acceptable to the Examiner;

C) figures 1, 2, 3, 4, 5, 6, 7, 8 & 9 of the set of drawings containing 9 sheets of 9 figures comprising figures 1, 2, 3, 4, 5, 6, 7, 8 & 9 as presented in the set of drawings filed on 31 January 2011 where the content of figures 3, 4, 5, 6, 7, 8 & 9 of the above set of drawings is acceptable to the Examiner;

D) the written description as filed on 31 January 2011;

E) the set of claims as filed on 31 January 2011; and

F) the NON-Publication request filed on 31 January 2011.

2. BENEFIT OF AN EARLIER FILING DATE

2.1 Applicant's claim for the benefit of an earlier filing date pursuant to 35 U.S.C. 120 is acknowledged.

3. PRIOR ART FROM EARLIER APPLICATIONS

3.1 The Examiner has considered the prior art cited in the applications for which Applicant has claimed the benefit of an earlier filing date pursuant to 35 U.S.C. 120.

3.1.1 If Applicant wishes any of the prior art that was cited in each of the base applications but that has not been cited during the prosecution of the instant application to appear on any Patent granted on the instant application, then Applicant must provide a properly completed PTO-1449 containing proper citations of the prior art that Applicant wishes to appear on any Patent that may be granted on the instant application.

4. INFORMATION DISCLOSURE STATEMENT (IDS)

4.1 The Examiner notes that each of the documents that have been crossed off each IDS that was filed on 16 May 2011 have been crossed off because each of these documents are duplicate of a citation of the same document which has been cited on the IDS filed 31 January 2011 and that has been considered by the Examiner.

5. OBJECTIONS TO THE DRAWINGS

5.1 The set of drawings filed on 31 January 2011 is objected to because:

A) the drawings and/or the written description are inconsistent and fail to comply with 37 CFR 1.84(p)(4,5) and therefore are confusing. In this regard, it is noted that:

(1) Applicant's use of reference legends 132 & 135 is confusing and inconsistent. In this regard as can be seen in figure 1 and from the context of paragraph numbers 21, 23, 25-26, 34-36, 38 & 85, Applicant has used reference legend 132 in order to designate the "Cadence Logic" and reference legend 135 in order to designate the "Rolling Average Logic". However, as can be seen from the context of paragraph numbers 23 & 25 of the written description, Applicant has explicitly referenced "cadence logic 135". In view of this, Applicant has used of reference legends 132 & 135 in a confusing and inconsistent manner within the drawings and written description in order to designate one or more depicted features of the invention which is not consistent with the requirements of 37 CFR 1.84(p)(4,5).

(2) Applicant's use of reference legends 200 & 201 is confusing and inconsistent. In this regard as can be seen in figure 2 and from the context of paragraph number 25, Applicant has used reference legend 201 in order to generally designate the "motion cycle graph" depicted in figure 2. However, as can be seen in figure 2, Applicant has used reference legend 200 in order to generally designate the depicted "motion cycle graph" and Applicant has not used reference legend 201 in order to designate feature of the invention depicted in figure 2. In view of this, Applicant has used of reference legends 200 & 201 in a confusing and inconsistent manner within the drawings and written description in order to designate one or more depicted features of the invention which is not consistent with the requirements of 37 CFR 1.84(p)(4,5).

(3) Applicant's use of reference legend 215 is confusing and inconsistent. In this regard as can be seen in figure 2 and from the context of paragraph number 30, it would appear that Applicant has used reference legend 215 in order to designate the interval between the time that first step 217 was counted and the time that first step 232 was counted. However, as can be seen from the context of the written description, Applicant has not explicitly referenced reference legend 215 when describing the features of the

invention depicted in figure 2. In view of this, Applicant has used of reference legend 215 in a confusing and inconsistent manner within the drawings and written description in order to designate a depicted feature of the invention which is not consistent with the requirements of 37 CFR 1.84(p)(4,5). Further in this regard, Applicant should note the context of paragraph number 76 of the written description.

(4) Applicant's use of reference legend 125 and the reference title legend "measurement buffer" is confusing and inconsistent. In this regard as can be seen from the context of paragraph number 40, Applicant has used reference legend 125 in order to designate the "measurement buffer" of figure 1. However, as can be seen in figure 1, Applicant has not used either reference legend 125 or the reference title legend "measurement buffer" in order to designate any of the features of the invention that have been depicted in figure 1. In view of this, Applicant has used of reference legends 125 and the reference title legend "measurement buffer" in a confusing and inconsistent manner within the drawings and written description in order to designate one or more depicted features of the invention which is not consistent with the requirements of 37 CFR 1.84(p)(4,5).

(5) Applicant's use of reference legends 524 & 540 is confusing and inconsistent. In this regard as can be seen in figure 5 and from the context of paragraph numbers 65-67, Applicant has used reference legend 524 in order to designate block of process 500 that has been entitled as "Recognize additional step?" and Applicant has described and depicted that when the inquiry of block 524 is "NO" then block 530 is performed and when the inquiry of block 524 is "YES" then block 560 is performed. Further Applicant has used reference legend 540 in order to designate block of process 500 that has been entitled as "Acceleration Detected?" and Applicant has described and depicted that when the inquiry of block 540 is "NO" then block 544 is performed and when the inquiry of block 540 is "YES" then block 510 is performed. However, as can be seen from the context of paragraph number 67 of the written description Applicant has explicitly referenced that when the inquiry of block 540 is "YES" then block 560 is performed which has not been depicted in figure 5. In view of this, Applicant has used of reference legends 524 & 540 in a confusing and inconsistent manner within the drawings and

written description in order to designate one or more depicted features of the invention which is not consistent with the requirements of 37 CFR 1.84(p)(4,5).

In view of the above, the written description and drawings either describe or depict one or more features of the invention in a confusing and inconsistent manner, and therefore the drawings and/or the written description are inconsistent, confusing and fail to comply with the requirements of 37 CFR 1.84(p)(4,5) and hence do not aid in the understanding of the invention as required by 37 CFR 1.81(a,b).

5.1.1 Corrected drawing sheets in compliance with 37 CFR 1.121(d) are required in reply to the Office action to avoid abandonment of the application. Any amended replacement drawing sheet should include all of the figures appearing on the immediate prior version of the sheet, even if only one figure is being amended. The figure or figure number of an amended drawing should not be labeled as "amended." If a drawing figure is to be canceled, the appropriate figure must be removed from the replacement sheet, and where necessary, the remaining figures must be renumbered and appropriate changes made to the brief description of the several views of the drawings for consistency. Additional replacement sheets may be necessary to show the renumbering of the remaining figures. Each drawing sheet submitted after the filing date of an application must be labeled in the top margin as either "Replacement Sheet" or "New Sheet" pursuant to 37 CFR 1.121(d). If the changes are not accepted by the Examiner, the Applicant will be notified and informed of any required corrective action in the next Office action. The objection to the drawings will not be held in abeyance.

6. OBJECTIONS TO THE WRITTEN DESCRIPTION

6.1 The disclosure is objected to because of the following informalities:

A) for each application that has been referenced within the context of the written description, Applicant must update the current status of the referenced application. In this regard Applicant should note the changes proposed below by the Examiner and:

(1) patented application serial number 12/964,135 as mentioned in the context of the paragraph number 1 of the written description which issued as patent number 7,881,902 on February 01, 2011.

B) the following errors and/or inconsistencies between the drawings filed on 31 January 2011 and the written description have been noted:

(1) the drawings and/or the written description are inconsistent and fail to comply with 37 CFR 1.84(p)(4,5) and therefore are confusing, for the reasons noted above in section 5.1(A). In view of the above noted inconsistencies the drawings and/or the written description are inconsistent, confusing and fail to comply with the requirements of 37 CFR 1.84(p)(4,5) and hence do not aid in the understanding of the invention as required by 37 CFR 1.81(a,b). In this regard Applicant should note the related changes suggested below by the Examiner.

C) Applicant's use of the character string "(." within the context of paragraph number 29 of the written description is confusing and therefore the character string "(." should be deleted.

D) in view of the above objections, the Examiner suggests that the written description should be amended by amending the paragraph:

(1) number 1:

[0001] The present patent application is a continuation of U.S. Application No. 12/694,135, filed on January 26, 2010, now U.S. Patent No. 7,881,902, [[to issue]] issued on February 1,2011; which is a continuation of U.S. Application No. 11/644,455, filed on December 22, 2006, now U.S. Patent No. 7,653,508, issued on January 26, 2010.

(2) number 23:

[0023] Referring to **Figure 1**, the cadence logic 132 may determine one or more sample periods to be used by the rolling average logic 135, and may determine a cadence window 150 to be used by the step counting logic 130. In one embodiment, the cadence logic [[135]] 132 detects a period and/or cadence of a motion cycle. The period and/or cadence of the motion cycle may be based upon user activity (e.g. rollerblading, biking, running, walking, etc).

(3) number 25:

[0025] Figure 2 illustrates an exemplary motion cycle graph [[201]] 200 that measures time versus acceleration, in accordance with one embodiment of the present invention. The exemplary motion-cycle graph [[201]] 200 shows acceleration data taken with a single tri-axis inertial senor. The acceleration at a given period of time is represented for a first axis 203, a

second axis 205, and a third axis 207. In one embodiment, the cadence logic [[135]] 132 of **Figure 1** analyzes the acceleration along the first axis 203, second axis 205 and third axis 207 to detect a motion cycle. Once a motion cycle is detected, a period of the motion cycle is determined, and a cadence of the motion cycle is determined. **Figure 2** shows an exemplary period of a motion cycle 210 for the third axis 207, the period being approximately 0.6 seconds. The same period can also be seen to a lesser degree in the second axis 205 and the first axis 203. The corresponding cadence to the motion cycle is approximately one hundred motion cycles per minute.

(4) number 29:

[0029] Returning to **Figure 2**, cadence windows may be used to count steps until an expected step is not encountered. In one embodiment, new cadence windows are determined periodically. In one embodiment, the cadence window is a dynamic cadence window that continuously updates as a user's cadence changes. For example, using a dynamic cadence window, a new cadence window length may be set after each step. [[(.]] The cadence window minimums may be determined by subtracting a value from the stepping period, and the cadence window maximums may be determined by adding a value to the stepping period. In one embodiment, the cadence window maximums are preset, and the cadence window minimums are updated after each step is counted. In one embodiment, the cadence window minimums are preset, and the cadence window maximums are updated after each step is counted. In one embodiment, both the cadence window minimums and cadence window maximums are updated when a step is counted. In one embodiment, the current cadence window minimum is determined by subtracting 200 ms from the current stepping cadence period. In one embodiment, the cadence window minimum has a minimum value of 240 ms.

(5) number 40:

[0040] Returning to **Figure 1**, the step counting logic 130 may include a measurement selection logic 145, a cadence window 150, a measurement comparator 155, a threshold comparator 160, a step count buffer 165, and a mode logic 190. The measurement selection logic 145 may determine which measurements [[from the measurement buffer 125]] to use to

determine if a step has occurred. In one embodiment, the measurement selection logic 145 may monitor accelerations relative to the dominant axis, and select only those measurements with specific relations to the dominant axis for measurement. For example, only accelerations that are approximately parallel to the dominant axis may be selected, or alternatively, only accelerations that are approximately perpendicular to the dominant axis may be selected. In one embodiment, the measurement selection logic 145 selects only measurements of acceleration data along the dominant axis. In alternative embodiments, measurements of acceleration data along other axes may also be used. In one embodiment, measurements of acceleration along only the other axes are used.

(6) number 67:

[0067] At block 540, processing logic determines whether any relevant acceleration is detected. If no relevant acceleration is detected, then sleep mode is initiated (block 544). If some relevant acceleration is detected, then processing logic returns to block 510 to await recognition of another first step. If at block [[540]] 524 an additional step was recognized, the process continues to block 560.

6.1.1 Appropriate correction is required.

7. QUAYLE ACTION

7.1 This application is in condition for allowance except for the following formal matters:

A) see the above objections as set forth above in sections 5 & 6.

7.2 Prosecution on the merits is closed in accordance with the practice under *Ex parte Quayle*, 1935 C.D. 11, 453 O.G. 213.

7.3 A shortened statutory period for reply to this action is set to expire **TWO MONTHS** from the mailing date of this letter.

8. REASONS FOR ALLOWANCE

8.1 The following is a statement of reasons for the indication of allowable subject matter over the prior art:

A) the prior art, for example:

(1) either Richardson et al (5,976,083 or 6,135,951) or Ebeling et al (6,145,389) or Tsuji (2005/0232388 or 2005/0238132 or 7,169,084 or 7,297,088) or Darley (6,611,789 or 2007/0061105 or 2007/0208531 or 2010/0057398) or Park et al (2007/0067094) disclose a machine/process that provides the useful and beneficial function of monitoring the physical fitness activities of an user. To monitor the physical fitness activities of the user, an accelerometer is used in order to monitor the acceleration of the user while performing a physical fitness activity. The measured acceleration data/information of the user during the physical fitness activity is then suitably processed by being suitably analyzed or evaluated in order to:

(1a) detect any variation in the measured acceleration that would represent a particular physical fitness activity of the user; and

(1b) make a more accurate determination of the user's steps or strides so as to determine an more accurate measurement of the user's step or stride distance for a particular physical fitness activity.

In this manner the total distance that has been traveled by the user during the particular physical fitness activity may be more accurately determined based on the user's step or stride or gait and the total distance that is traveled by the user during each step or stride gait of the user. Whereas further taught or suggested by either Darley (6,611,789 or 2007/0061105 or 2007/0208531 or 2010/0057398) when a step is not detected within a predetermined period or interval or duration of time a sleep mode is initialed until a qualifying acceleration is detected and the monitor wakes up.

(2) either Sakuria et al (6,369,794) or Kubo et al (2002/0089425 or 6,700,499) or Ladetto et al (2003/0018430 or 6,826,477) disclose a machine/process that provides the useful and beneficial function of determining an user's action or motion. To determine the user's action or motion a measured acceleration, that represents the user's action or motion, is detected. The measured acceleration is then evaluated or analyzed in order to determine the in which time variations in a measured acceleration which represent an user's action or motion.

(3) either Seo et al (2006/0020177 or 7,334,472) disclose a machine/process that provides the useful and beneficial function of placing an acceleration based pedometer

machine/process into a sleep or low power mode. Where the sampling frequency of the pedometer is changed when a step has not been detected within a predetermined period or interval or duration of time since the last detected step and then a sleep mode is initialed until a qualifying acceleration is detected and the monitor wakes up.

B) however, the prior art does not fairly teach or suggest in regard to claims 1, 11 & 15 a process in claim 1, a machine in claim 11, and a tangible non-transitory article/manufacture in claim 15 that provides the useful and beneficial function of monitoring the activity of an user by providing actions in claim 1 and structures in claims 1 & 15 that perform at least the functions of:

(1) assigning a dominant axis for an inertial sensor based upon the orientation of the inertial sensor;

(2) detecting a change in the orientation of the inertial sensor and updating the assigned dominant axis for the inertial sensor based upon the detected change in the orientation of the inertial sensor; and

(3) counting period motions by monitoring accelerations relative to the dominant axis of the inertial sensor.

Claims 2-5, which depend from claim 1, claims 12-14, which depend from claim 11, and claims 16-20, which depend from claim 15 are allowable over the prior art for the same reason.

C) however, the prior art does not fairly teach or suggest in regard to claim 6 a process in claim 6, that provides the useful and beneficial function of monitoring the activity of an user by providing actions in claim 6 that perform at least the functions of:

(1) buffering a plurality of periodic motions;

(2) identifying or detecting the number of periodic motions within a cadence window or interval or duration from the buffered periodic motions; and

(3) counting the detected period motions in order to monitor an activity.

Claims 7-10, which depend from claim 6, are allowable over the prior art for the same reason.

9. RELEVANT ART OF INTEREST

9.1 The Examiner has cited prior art of interest, for example:

A) either Kahn et al (2009/0043531 or 2009/0234614 or 2009/0319221 or 7,647,196 or 7,653,508 or 2010/0056872 or 7,753,861 or 7,881,902 or 7,987,070) are publications of a related applications with at least one common inventor and a latter effective date.

10. CONCLUSION

10.1 Any inquiry concerning this communication or earlier communications from the Examiner should be directed to Edward R. Cosimano whose telephone number is 571-272-0571. The Examiner can normally be reached on 571-272-0571 from 8:30am to 5:00pm.

10.2 If attempts to reach the Examiner by telephone are unsuccessful, the Examiner's supervisor, Andrew Schechter, can be reached on 571-272-2302. The fax phone number for the organization where this application or proceeding is assigned is 571-273-8300.

10.3 Information regarding the status of an application may be obtained from the Patent Application Information Retrieval (PAIR) system. Status information for published applications may be obtained from either Private PAIR or Public PAIR. Status information for unpublished applications is available through Private PAIR only. For more information about the PAIR system, see http://portal.uspto.gov/external/portal. Should you have questions on access to the Private PAIR system, contact the Electronic Business Center (EBC) at 866-217-9197 (toll-free).

ERC
11/04/2011

/Edward Cosimano/
Primary Examiner Unit 2857

Notice of References Cited	Application/Control No. 13/018,321	Applicant(s)/Patent Under Reexamination KAHN ET AL.	
	Examiner EDWARD COSIMANO	Art Unit 2857	Page 1 of 1

U.S. PATENT DOCUMENTS

*		Document Number Country Code-Number-Kind Code	Date MM-YYYY	Name	Classification
*	A	US-7,881,902	02-2011	Kahn et al.	702/160
*	B	US-7,987,070	07-2011	Kahn et al.	702/160
	C	US-			
	D	US-			
	E	US-			
	F	US-			
	G	US-			
	H	US-			
	I	US-			
	J	US-			
	K	US-			
	L	US-			
	M	US-			

FOREIGN PATENT DOCUMENTS

*		Document Number Country Code-Number-Kind Code	Date MM-YYYY	Country	Name	Classification
	N					
	O					
	P					
	Q					
	R					
	S					
	T					

NON-PATENT DOCUMENTS

*		Include as applicable: Author, Title Date, Publisher, Edition or Volume, Pertinent Pages)
	U	
	V	
	W	
	X	

*A copy of this reference is not being furnished with this Office action. (See MPEP § 707.05(a).)
Dates in MM-YYYY format are publication dates. Classifications may be US or foreign.

Index of Claims	Application/Control No.	Applicant(s)/Patent Under Reexamination
	13018321	KAHN ET AL.
	Examiner	Art Unit
	EDWARD COSIMANO	2857

✓	Rejected	-	Cancelled	N	Non-Elected	A	Appeal
=	Allowed	÷	Restricted	I	Interference	O	Objected

☐ Claims renumbered in the same order as presented by applicant ☐ CPA ☐ T.D. ☐ R.1.47

CLAIM		DATE								
Final	Original	11/04/2011								
	1	=								
	2	=								
	3	=								
	4	=								
	5	=								
	6	=								
	7	=								
	8	=								
	9	=								
	10	=								
	11	=								
	12	=								
	13	=								
	14	=								
	15	=								
	16	=								
	17	=								
	18	=								
	19	=								
	20	=								

Substitute for Form 1449/PTO				Complete if Known	
INFORMATION DISCLOSURE STATEMENT BY APPLICANT				Application Number	13/018,321
(use as many sheets as necessary)				Filing Date	Herewith
				First Named Inventor:	Philippe Kahn
				Art Unit	2857
				Examiner Name	Not yet assigned
Sheet	1	**of**	3	Attorney Docket Number	8689P027C2

U.S. PATENT DOCUMENTS

Examiner Initials*	Cite No.[1]	Document Number		Publication Date MM-DD-YYYY	Name of Patentee or Applicant of Cited Document	Pages, Columns, Lines, Where Relevant Passages or Relevant Figures Appear
		Number-Kind Code[2] (If known)				
/E.C./		US-	5,446,775	8/25/1995	Wright et al	
		US-	5,583,776	12/10/1996	Levi et al	
		US-	5,654,619	8/5/1997	Iwashita, Yasusuke	
		US-	5,778,882	7/14/1998	Raymond et al	
		US-	6,122,595	9/19/2000	Varley et al	
		US-	6,282,496	8/28/2001	Chowdhary	
		US-	6,428,490	8/6/2002	Kramer et al	
		US-	6,496,695	12/17/2002	Kouji et al	
		US-	6,786,877	9/7/2004	Foxlin	
		US-	7,177,684	2/13/2007	Kroll et al	
		US-	2002/0023654	2/28/2002	Webb, James D	
		US-	2002/0118121	8/29/2002	Lehrman et al	
		US-	2003/0048218	3/13/2003	Milnes et al	
		US-	2006/0167387	7/27/2006	Buchholz et al	
		US-	2006/0206258	9/14/2006	Brooks, Amanda S.	
		US-	2006/0284979	12/21/2006	Clarkson, Brian	
		US-	2006/0288781	12/28/2006	Daumer et al	
		US-	2007/0038364	2/15/2007	Lee et al	
		US-	2007/0130582	6/7/2007	Chang et al	
		US-	2007/0250261	10/25/2007	Soehren	
		US-	2007/0260418	11/8/2007	Ladetto et al	
		US-	2008/0171918	7/17/2008	Teller et al	
/E.C./		US-	2009/0213002	8/27/2009	Rani et al	
		US-				
		US-				
		US-				
		US-				
		US-				

Examiner Signature	/Edward Cosimano/	Date Considered	11/03/2011

*EXAMINER: Initial if reference considered, whether or not citation is in conformance with MPEP 609; Draw line through citation if not in conformance and not considered. Include copy of this form with next communication to applicant. [1]Applicant's unique citation designation number (optional). [2]See Kinds Codes of USPTO Patent Documents at www.uspto.gov or MPEP 901.04. [3]Enter Office that issued the document, by the two-letter code (WIPO Standard ST.3). [4]For Japanese patent documents, the indication of the year of reign of the Emperor must precede the serial number of the patent document. [5]Kind of document by the appropriate symbols as indicated on the document under WIPO Standard ST. 16 if possible. [6]Applicant is to place a check mark here if English language translation is attached.

This collection of information is required by 37 CFR 1.97 and 1.98. The information is required to obtain or retain a benefit by the public which is to file (and by the USPTO to process) an application. Confidentiality is governed by 35 U.S.C. 122 and 37 CFR 1.14. This collection is estimated to take 2 hours to complete including gathering, preparing, and submitting the completed application form to the USPTO. Time will vary depending upon the individual case. Any comments on the amount of time you require to complete this form and/or suggestions for reducing this burden, should be sent to the Chief Information Officer, U.S. Patent and Trademark Office, P.O. Box 1450, Alexandria, VA 22313-1450. DO NOT SENT FEES OR COMPLETED FORMS TO THIS ADDRESS. **SEND TO: Commissioner for Patents, P.O. Box 1450, Alexandria, Virginia 22313-1450.**

If you need assistance in completing the form, call 1-800-PTO-9199 (1-800-786-9199) and select option 2.

Substitute for Form 1449/PTO				Complete if Known	
INFORMATION DISCLOSURE STATEMENT BY APPLICANT (use as many sheets as necessary)				Application Number	13/018,321
				Filing Date	Herewith
				First Named Inventor:	Philippe Kahn
				Art Unit	2857
				Examiner Name	Not yet assigned
Sheet	2	of	3	Attorney Docket Number	8689P027C2

NON PATENT LITERATURE DOCUMENTS

Examiner Initials*	Cite No[1]	Include name of the author (in CAPITAL LETTERS), title of the article (when appropriate), title of the item (book, magazine, journal, serial, symposium, catalog, etc.), date, page(s), volume-issue number(s), publisher, city and/or country where published	T[2]
		~~BOURZAC, Katherine "Wearable Health Reports," Technology Review, February 28, 2006, <http://www.technreview.com/printer_friendly_article_aspx?id=16431>, 3/22/2007, 3 pages~~	
/E.C./		CHENG, et al, "Periodic Human Motion Description for Sports Video Databases," Proceedings of the Pattern Recognition, 2004, 5 pages	
		~~DAO, Ricardo, "Inclination Sensing with Thermal Accelerometers", MEMSIC, May 2002, 3 pages~~	
/E.C./		Heart Rate Monitors, <http://www.suunto.com/suunto/Worlds/main/world_article_product_no_ATL.jsp?CONTENT%3C%3Ecnt_id=10134198673968765&FOLDER%3C%3Efolder_d=9852723697225397&ASSORTMENT%3C%3East_id=1408474395903593&bmUID=1174532640618speed>, 4/4/2007, 1 page	
/E.C./		JONES, L, et al, "Wireless Physiological Sensor System for Ambulatory Use," <http://ieeexplore.ieee.org/xpl/freeabs_all.jsp?tp=&arnumber=1612917&isnumber=33861>, April 3-5, 2006	
		~~LEE, SEON-WOO, et al., "Recognition of Walking Behaviors for Pedestrian Navigation," ATR Media Integration & Communications Research Laboratories, Kyoto, Japan, 4 pages~~	
		~~MARGARIA, Rodolfo, "Biomechanics and Energetics of Muscular Exercise", Chapter 3, pages 105-125, Oxford: Clarendon Press 1976~~	
		~~MIZELL, David, "Using Gravity to Estimate Accelerometer Orientation", Seventh IEEE International Symposium on Wearable Computers, 2003, 2 pages~~	
		~~ORMONEIT, D., et al (2000). Learning and tracking of cyclic human motion. Proceedings of NIPS 2000 (Neural Information Processing Systems), Denver, CO, pp 894-900~~	
		~~PCT International Search Report and Written Opinion for International Application No: PCT/US2008/072587, mailed 22 October 2008, 10 pages~~	

Examiner Signature	/Edward Cosimano/	Date Considered	11/03/2011

*Examiner: Initial if reference considered, whether or not citation is in conformance with MPEP 609. Draw line through citation if not in conformance and not considered. Include copy of this form with next communication to applicant.

[1]Applicant's unique citation designation number (optional). [2]Applicant is to place a check mark here if English Translation is attached.

This collection of information is required by 37 CFR 1.98. The information is required to obtain or retain a benefit by the public which is to file (and by the USPTO to process) an application. Confidentiality is governed by 35 U.S.C. 122 and 37 CFR 1.14. This collection is estimated to take 2 hours to complete including gathering, preparing, and submitting the completed application form to the USPTO. Time will vary depending upon the individual case. Any comments on the amount of time you require to complete this form and/or suggestions for reducing this burden, should be sent to the Chief Information Officer, U.S. Patent and Trademark Office, P.O. Box 1450, Alexandria, VA 22313-1450. DO NOT SENT FEES OR COMPLETED FORMS TO THIS ADDRESS. **SEND TO: Commissioner for Patents, P.O. Box 1450, Alexandria, Virginia 22313-1450.**

If you need assistance in completing the form, call 1-800-PTO-9199 (1-800-786-9199) and select option 2.

Substitute for Form 1449/PTO				Complete if Known	
INFORMATION DISCLOSURE STATEMENT BY APPLICANT (use as many sheets as necessary)				Application Number	13/018,321
				Filing Date	Herewith
				First Named Inventor:	Philippe Kahn
				Art Unit	2857
				Examiner Name	Not yet assigned
Sheet	3	of	3	Attorney Docket Number	8689P027C2

NON PATENT LITERATURE DOCUMENTS

Examiner Initials*	Cite No[1]	Include name of the author (in CAPITAL LETTERS), title of the article (when appropriate), title of the item (book, magazine, journal, serial, symposium, catalog, etc.), date, page(s), volume-issue number(s), publisher, city and/or country where published	T[2]
		~~PCT International Search Report and Written Opinion for PCT/US2009/40523, mailed 8/27/2009, 8 pages~~	
/E.C./		"Sensor Fusion," <www.u-dynamics.com>, accessed 8/29/2008, 2 pages NO DATE	
/E.C./		SINHA, Alex, "Heart Monitoring Training," <http://www.marathonguide.com/training/articles/HeartMonitorTraining.cfm>, 4/4/2007, 5 pages	
/E.C./		WANG, Shu, et al, "Location Based Services for Mobiles: Technologies and Standards, LG Electronics MobileComm," IEEE ICC 2008, Beijing, pages 1-66 (part 1 of 3)	
/E.C./		WANG, Shu, et al, "Location Based Services for Mobiles: Technologies and Standards, LG Electronics MobileComm," IEEE ICC 2008, Beijing, pages 67-92 (part 2 of 3)	
/E.C./		WANG, Shu, et al, "Location Based Services for Mobiles: Technologies and Standards, LG Electronics MobileComm," IEEE ICC 2008, Beijing, pages 93-123 (part 3 of 3)	
/E.C./		WECKESSER, P, et al, "Multiple Sensorprocessing for High-Precision Navigation and Environmental Modeling with a Mobile Robot," IEEE, 1995, pp 453-458	
		~~WEINBERG, Harvey, "MEMS Motion Sensors Boost Handset Reliability" June 2006, <http://www.mwrf.com/Articles/Print.cfm?ArticleID=12740>, February 21, 2007, 3 pages~~	
/E.C./		YOO, CHANG-SUN, et al, "Low Cost GPS/INS Sensor Fusion System for UAV Navigation," IEEE, 2003, 9 pages	

Examiner Signature	/Edward Cosimano/	Date Considered	11/03/2011

*Examiner: Initial if reference considered, whether or not citation is in conformance with MPEP 609. Draw line through citation if not in conformance and not considered. Include copy of this form with next communication to applicant.

[1]Applicant's unique citation designation number (optional). [2]Applicant is to place a check mark here if English Translation is attached.

This collection of information is required by 37 CFR 1.98. The information is required to obtain or retain a benefit by the public which is to file (and by the USPTO to process) an application. Confidentiality is governed by 35 U.S.C. 122 and 37 CFR 1.14. This collection is estimated to take 2 hours to complete including gathering, preparing, and submitting the completed application form to the USPTO. Time will vary depending upon the individual case. Any comments on the amount of time you require to complete this form and/or suggestions for reducing this burden, should be sent to the Chief Information Officer, U.S. Patent and Trademark Office, P.O. Box 1450, Alexandria, VA 22313-1450. DO NOT SENT FEES OR COMPLETED FORMS TO THIS ADDRESS. **SEND TO: Commissioner for Patents, P.O. Box 1450, Alexandria, Virginia 22313-1450.**

If you need assistance in completing the form, call 1-800-PTO-9199 (1-800-786-9199) and select option 2.

Substitute for Form 1449/PTO				Complete if Known	
INFORMATION DISCLOSURE STATEMENT BY APPLICANT (use as many sheets as necessary)				Application Number	13/018,321
				Filing Date	Herewith
				First Named Inventor:	Philippe Kahn
				Art Unit	2857
				Examiner Name	Not yet assigned
Sheet	1	**of**	3	Attorney Docket Number	8689P027C2

U.S. PATENT DOCUMENTS

Examiner Initials*	Cite No.[1]	Document Number Number-Kind Code[2] (If known)		Publication Date MM-DD-YYYY	Name of Patentee or Applicant of Cited Document	Pages, Columns, Lines, Where Relevant Passages or Relevant Figures Appear
/E.C./		US-	6,353,449	3/5/2002	Gregg et al	
		US-	6,771,250	8/3/2004	Oh	
		US-	7,054,784	5/30/2006	Flentov et al	
		US-	7,057,551	6/6/2006	Vogt, Mark J	
		US-	7,451,056	11/11/2008	Flentov et al	
		US-	7,467,060	12/16/2008	Kulach et al	
		US-	7,512,515	3/31/2009	Vock et al	
		US-	7,608,050	10/27/2009	Sugg, Christoper John	
		US-	7,640,804	1/5/2010	Daumer et al	
		US-	7,647,196	11/12/2010	Kahn et al	
		US-	7,752,011	7/6/2010	Niva et al	
		US-	7,774,156	8/10/2010	Niva et al	
		US-	7,857,772	12/28/2010	Bouvier et al	
		US-	2002/0118121	8/29/2002	Lehrman et al	
		US-	2005/0202934	9/15/2005	Olrik et al	
		US-	2005/0210300	9/22/2005	Song et al	
		US-	2006/0063980	3/23/2006	Hwang et al	
		US-	2006/0064276	3/23/2006	Ren et al	
		US-	2006/0161377	7/20/2006	Rakkola et al	
		US-	2006/0259268	11/16/2006	Vock et al	
		US-	2006/0284979	12/21/2006	Clarkson, Brian	
		US-	2007/0038364	2/15/2007	Lee et al	
		US-	2007/0073482	3/29/2007	Churchill et al	
		US-	2007/0150136	6/28/2007	Doll et al	
		US-	2007/0213126	9/13/2007	Deutsch et al	
		US-	2007/0259716	11/8/2007	Mattice et al	
		US-	2007/0260482	11/8/2007	Nurmela et al	
/E.C./		US-	2009/0047645	2/19/2009	Dibenedetto et al	

Examiner Signature	/Edward Cosimano/	Date Considered	11/03/2011

*EXAMINER: Initial if reference considered, whether or not citation is in conformance with MPEP 609; Draw line through citation if not in conformance and not considered. Include copy of this form with next communication to applicant. [1]Applicant's unique citation designation number (optional). [2]See Kinds Codes of USPTO Patent Documents at www.uspto.gov or MPEP 901.04. [3]Enter Office that issued the document, by the two-letter code (WIPO Standard ST.3). [4]For Japanese patent documents, the indication of the year of reign of the Emperor must precede the serial number of the patent document. [5]Kind of document by the appropriate symbols as indicated on the document under WIPO Standard ST. 16 if possible. [6]Applicant is to place a check mark here if English language translation is attached.

This collection of information is required by 37 CFR 1.97 and 1.98. The information is required to obtain or retain a benefit by the public which is to file (and by the USPTO to process) an application. Confidentiality is governed by 35 U.S.C. 122 and 37 CFR 1.14. This collection is estimated to take 2 hours to complete including gathering, preparing, and submitting the completed application form to the USPTO. Time will vary depending upon the individual case. Any comments on the amount of time you require to complete this form and/or suggestions for reducing this burden, should be sent to the Chief Information Officer, U.S. Patent and Trademark Office, P.O. Box 1450, Alexandria, VA 22313-1450. DO NOT SENT FEES OR COMPLETED FORMS TO THIS ADDRESS. **SEND TO: Commissioner for Patents, P.O. Box 1450, Alexandria, Virginia 22313-1450.**

If you need assistance in completing the form, call 1-800-PTO-9199 (1-800-786-9199) and select option 2.

Substitute for Form 1449/PTO				Complete if Known	
INFORMATION DISCLOSURE STATEMENT BY APPLICANT *(use as many sheets as necessary)*				Application Number	13/018,321
				Filing Date	Herewith
				First Named Inventor:	Philippe Kahn
				Art Unit	2857
				Examiner Name	Not yet assigned
Sheet	2	**of**	3	Attorney Docket Number	8689P027C2

NON PATENT LITERATURE DOCUMENTS

Examiner Initials*	Cite No[1]	Include name of the author (in CAPITAL LETTERS), title of the article (when appropriate), title of the item (book, magazine, journal, serial, symposium, catalog, etc.), date, page(s), volume-issue number(s), publisher, city and/or country where published	T[2]
/E.C./		ANDERSON, Ian, et al, "Shakra: Tracking and Sharing Daily Activity Levels with Unaugmented Mobile Phones," Mobile Netw Appl, 8/3/2007, pp 185-199	
/E.C./		AYLWARD, Ryan, et al, "Sensemble: A Wireless, Compact, Multi-User Sensor System for Interactive Dance," International Conference on New Interfaces for Musical Expression (NIME06), June 4-8, 2006, pp 134-139	
/E.C./		BACA, Arnold, et al, "Rapid Feedback Systems for Elite Sports Training," IEEE Pervasive Computing, October-December 2006, pp 70-76	
/E.C./		BAKHRU, Kesh, "A Seamless Tracking Solution for Indoor and Outdoor Position Location," IEEE 16th International Symposium on Personal, Indoor, and Mobile Radio Communications, 2005, pp 2029-2033	
/E.C./		BLILEY, Kara E, et al, "A Miniaturized Low Power Personal Motion Analysis Logger Utilizing MEMS Accelerometers and Low Power Microcontroller," IEEE EMBS Special Topic Conference on Microtechnologies in Medicine and Biology, May 12-15, 2005, pp 92-93	
/E.C./		FANG, Lei, et al, "Design of a Wireless Assisted Pedestrian Dead Reckoning System--The NavMote Experience," IEEE Transactions on Instrumentation and Measurement, Vol 54, No 6, December 2005, pp 2342-2358	
/E.C./		HEALEY, Jennifer, et al, "Wearable Wellness Monitoring Using ECG and Accelerometer Data," IEEE Int. Symposium on Wearable Computers (ISWC'05), 2005, 2 pages	
/E.C./		HEMMES, Jeffrey, et al, "Lessons Learned Building TeamTrak: An Urban/Outdoor Mobile Testbed," 2007 IEEE Int. Conf. on Wireless Algorithms, August 1-3, 2007, pp 219-224	
/E.C./		JOVANOV, Emil, et al, "A Wireless Body Area Network of Intelligent Motion Sensors for Computer Assisted Physical Rehabilitation," Journal of NeuroEngineering and Rehabilitation, March 2005, 10 pages	
/E.C./		KALPAXIS, Alex, "Wireless Temporal-Spatial Human Mobility Analysis Using Real-Time Three Dimensional Acceleration Data," IEEE Intl. Multi-Conf. on Computing in Global IT (ICCGI'07), 2007, 7 pages	

Examiner Signature	/Edward Cosimano/	Date Considered	11/03/2011

*Examiner: Initial if reference considered, whether or not citation is in conformance with MPEP 609. Draw line through citation if not in conformance and not considered. Include copy of this form with next communication to applicant.

[1]Applicant's unique citation designation number (optional). [2]Applicant is to place a check mark here if English Translation is attached.

This collection of information is required by 37 CFR 1.98. The information is required to obtain or retain a benefit by the public which is to file (and by the USPTO to process) an application. Confidentiality is governed by 35 U.S.C. 122 and 37 CFR 1.14. This collection is estimated to take 2 hours to complete including gathering, preparing, and submitting the completed application form to the USPTO. Time will vary depending upon the individual case. Any comments on the amount of time you require to complete this form and/or suggestions for reducing this burden, should be sent to the Chief Information Officer, U.S. Patent and Trademark Office, P.O. Box 1450, Alexandria, VA 22313-1450. DO NOT SENT FEES OR COMPLETED FORMS TO THIS ADDRESS. **SEND TO: Commissioner for Patents, P.O. Box 1450, Alexandria, Virginia 22313-1450.**

If you need assistance in completing the form, call 1-800-PTO-9199 (1-800-786-9199) and select option 2.

Substitute for Form 1449/PTO				Complete if Known	
INFORMATION DISCLOSURE STATEMENT BY APPLICANT *(use as many sheets as necessary)*				Application Number	13/018,321
				Filing Date	Herewith
				First Named Inventor:	Philippe Kahn
				Art Unit	2857
				Examiner Name	Not yet assigned
Sheet	3	**of**	3	Attorney Docket Number	8689P027C2

NON PATENT LITERATURE DOCUMENTS

Examiner Initials*	Cite No[1]	Include name of the author (in CAPITAL LETTERS), title of the article (when appropriate), title of the item (book, magazine, journal, serial, symposium, catalog, etc.), date, page(s), volume-issue number(s), publisher, city and/or country where published	T[2]
/E.C./		MILENKOVIC, Milena, et al, "An Accelerometer-Based Physical Rehabilitation System," IEEE SouthEastern Symposium on System Theory, 2002, pp 57-60	
/E.C./		OTTO, Chris, et al, "System Architecture of a Wireless Body Area Sensor Network for Ubiquitous Health Monitoring," Journal of Mobile Multimedia, Vol 1, No 4, 2006, pp 307-326	
/E.C./		PARK, Chulsung, et al, "Eco: An Ultra-Compact Low-Power Wireless Sensor Node for Real-Time Motion Monitoring," IEEE Int. Symp. on Information Processing in Sensor Networks, 2005, pp 398-403	
/E.C./		SHEN, Chien-Lung, et al, "Wearable Band Using a Fabric-Based Sensor for Exercise ECG Monitoring," IEEE Int. Symp. on Wearable Computers, 2006, 2 pages	
/E.C./		TAPIA, Emmanuel Munguia, et al, "Real-Time Recognition of Physical Activities and Their Intensities Using Wireless Accelerometers and a Heart Rate Monitor," IEEE Cont. on Wearable Computers, October 2007, 4 pages	
/E.C./		WIXTED, Andrew J, et al, "Measurement of Energy Expenditure in Elite Athletes Using MEMS-Based Triaxial Accelerometers," IEEE Sensors Journal, Vol 7, No 4, April 2007, pp 481-488	
/E.C./		WU, Winston H, et al, "Context-Aware Sensing of Physiological Signals," IEEE Int. Conf. on Engineering for Medicine and Biology, August 23-26, 2007, pp 5271-5275	

Examiner Signature	/Edward Cosimano/	Date Considered	11/03/2011

*Examiner: Initial if reference considered, whether or not citation is in conformance with MPEP 609. Draw line through citation if not in conformance and not considered. Include copy of this form with next communication to applicant.

[1]Applicant's unique citation designation number (optional). [2]Applicant is to place a check mark here if English Translation is attached.

This collection of information is required by 37 CFR 1.98. The information is required to obtain or retain a benefit by the public which is to file (and by the USPTO to process) an application. Confidentiality is governed by 35 U.S.C. 122 and 37 CFR 1.14. This collection is estimated to take 2 hours to complete including gathering, preparing, and submitting the completed application form to the USPTO. Time will vary depending upon the individual case. Any comments on the amount of time you require to complete this form and/or suggestions for reducing this burden, should be sent to the Chief Information Officer, U.S. Patent and Trademark Office, P.O. Box 1450, Alexandria, VA 22313-1450. DO NOT SENT FEES OR COMPLETED FORMS TO THIS ADDRESS. **SEND TO: Commissioner for Patents, P.O. Box 1450, Alexandria, Virginia 22313-1450.**

If you need assistance in completing the form, call 1-800-PTO-9199 (1-800-786-9199) and select option 2.

Inventor Information for 13/018321

Inventor Name	City	State/Country
KAHN, PHILIPPE	APTOS	CALIFORNIA
KINSOLVING, ARTHUR	SANTA CRUZ	CALIFORNIA
CHRISTENSEN, MARK ANDREW	SANTA CRUZ	CALIFORNIA
LEE, BRIAN Y.	APTOS	CALIFORNIA
VOGEL, DAVID	SANTA CRUZ	CALIFORNIA

Appln Info | Contents | Petition Info | Atty/Agent Info | Continuity Data | Foreign Data | **Inventors** | Address | Fees | Post Info | Pre Grant Pub

Search Another: Application# Search **or Patent#** Search
PCT / / Search **or PG PUBS #** Search
Attorney Docket # Search
Bar Code # Search

To go back use Back button on your browser toolbar.

Back to PALM | ASSIGNMENT | OASIS | Home page

CHECKED
/ERC/
28 October 2011

Continuity/Reexam Information for 13/018321

Parent Data
13018321, filed 01/31/2011 is a continuation of 12694135, filed 01/26/2010 ,now U.S. Patent #7881902
12694135 is a continuation of 11644455, filed 12/22/2006 ,now U.S. Patent #7653508 and having 1 RCE-type filing therein

Child Data

Appln Info | Contents | Petition Info | Atty/Agent Info | **Continuity Data** | Foreign Data | Inventors | Address | Fees | Post Info | Pre Grant Pub

Search Another: Application# Search **or Patent#** Search
PCT / / Search **or PG PUBS #** Search
Attorney Docket # Search
Bar Code # Search

To go back use Back button on your browser toolbar.

Back to PALM | ASSIGNMENT | OASIS | Home page

CHECKED
/ERC/
28 October 2011

Foreign Information for 13/018321

No Foreign Data

CHECKED
/ERC/
28 October 2011

	Type	L #	Hits	Search Text	DBs	Time Stamp
1	BRS	L1	197425	(dominant or principle or principal or major or critical or override or overridden or overriding or ((most or greatest or largest) near2 important)) near5 (axis or axies or direction or vector or orientate or orientated or orientating or orientation or incline or inclined or inclining or inclination)	US-PGPUB; USPAT; USOCR; FPRS; EPO; JPO; DERWENT; IBM_TDB	2011/11/03 18:14
2	BRS	L2	19600	1 near10 (inertial or ins or ims or gyro or gyroscope or acc or accel or accelerate or accelerated or accelerating or acceleration)	US-PGPUB; USPAT; USOCR; FPRS; EPO; JPO; DERWENT; IBM_TDB	2011/11/03 18:16
3	BRS	L3	1783137	(drift or drifted or drifting or vary or variance or varied or varying or variation or deviate or deviated or deviating or deviation or offset or depart or departed or departing or change or changed or changing or chang$1r or alter or altered or altering or alteration or alter$1r or modify or modified or modifying or modification or modif$2r or delta or adjust or adjusted or adjusting or adjustment or adjust$1r or shift or shifted or shifting or shift$1r) near6 (axis or axies or direction of vector or orientate or orientated or orientating or orientation or incline or inclined or inclining or inclination)	US-PGPUB; USPAT; USOCR; FPRS; EPO; JPO; DERWENT; IBM_TDB	2011/11/03 18:17

	Type	L #	Hits	Search Text	DBs	Time Stamp
4	BRS	L4	110582	3 near6 (inertial or ins or ims or gyro or gyroscope or acc or accel or accelerate or accelerated or accelerating or acceleration)	US-PGPUB; USPAT; USOCR; FPRS; EPO; JPO; DERWENT; IBM_TDB	2011/11/03 18:19
5	BRS	L5	1995	1 near5 (update or updated or updating or updat$1r or correct or corrected or correcting or correction or correct$1r or compensate or compensated or compensating or compensation or compensat$1r or calibrate or calibrated or calibrating or calibration or calibrat$1r)	US-PGPUB; USPAT; USOCR; FPRS; EPO; JPO; DERWENT; IBM_TDB	2011/11/03 18:20
6	BRS	L6	48	4 same 5	US-PGPUB; USPAT; USOCR; FPRS; EPO; JPO; DERWENT; IBM_TDB	2011/11/03 18:20
7	BRS	L7	266869	(count or counted or counting or number or numbered or numbering or increment or incremented or incrementing or accumulate or accumulated or accumulating or accumulation) near5 (motion or move or moved or moving or movements or acc or accel or accelerate or accelerated or accelerating or acceleration)	US-PGPUB; USPAT; USOCR; FPRS; EPO; JPO; DERWENT; IBM_TDB	2011/11/03 18:20

	Type	L #	Hits	Search Text	DBs	Time Stamp
8	BRS	L8	105	1 near5 7	US-PGPUB; USPAT; USOCR; FPRS; EPO; JPO; DERWENT; IBM_TDB	2011/11/03 18:21
9	BRS	L9	3	2 and 6 and 8	US-PGPUB; USPAT; USOCR; FPRS; EPO; JPO; DERWENT; IBM_TDB	2011/11/03 18:21
10	BRS	L30	888692	(motion or move or moved or moving or movement or walk or walking or run or running or jog or jogging or act or acting or action or active or activity or stride) near4 (number or numbered or numbering or count or counted or counting or accumulate or accumulated or accumulating or accumulation or at$1least or ((more or greater or larger or bigger) adj2 than) or plural or plurality or multiple or multi)	US-PGPUB; USPAT; USOCR; FPRS; EPO; JPO; DERWENT; IBM_TDB	2011/11/03 19:04

	Type	L #	Hits	Search Text	DBs	Time Stamp
11	BRS	L31	198908	30 near6 (measure or measured or measuring or measurement or monitor or monitored or monitoring or capture or captured or capturing or detect or detected or detecting or detection or detect$1r or sense or sensed or sensing or sens$1r or transduce or transduced or transducing or transducer or sample or sampled or sampling or sampl$1r or determine or determined or determining or determination or determin$1r or scan or scanned or scanning or scann$1r or met$1r or metered or metering or gauge or gauged or gauging or gaug$1r or gage or gaged or gaging or gag$1r or acquire or acquired or acquiring or acquisition or acquisitioning or acquir$1r or collect or collected or collecting or collection or collect$1r or log or logged or logging or logg$1r or record or recorded or recording or record$1r or accumulate or accumulated or accumulating or accumulation or accumulat$1r or register or registered or registering or registration or buffer or buffered or buffering or store or stored or storing or storage or memorize or memorized or memorizing or memorization or memory)	US-PGPUB; USPAT; USOCR; FPRS; EPO; JPO; DERWENT; IBM_TDB	2011/11/03 19:05

	Type	L #	Hits	Search Text	DBs	Time Stamp
12	BRS	L32	36809	30 near5 (judge or judged or judging or judgment or judgement or judg$1r or evaluate or evaluated or evaluating or evaluation or evaluat$1r or analysis or analyze or analyzed or analyzing or analyz$1r or allocate or allocated or allocating or allocation or allocat$1r or assign or assigned or assigning or assignment or assign$1r or id or identify or identifying or identified or identification or recogni$1e or recogni$1ed or recogni$1ing or recognition)	US-PGPUB; USPAT; USOCR; FPRS; EPO; JPO; DERWENT; IBM_TDB	2011/11/03 19:05
13	BRS	L33	1133712	(cadence or repeat or repeated or repeating or repetition or periodic or cycle or cyclic or cyclical or stride) near3 (criteria or criterion or criterium or threshold or limit or require or required or requiring or requirement or tolerance or window or range or band or qualify or qualified or qualifying or qualification or within or with$1in or standard or bench or bench$1mark or bench$1marked or bench$1marking or baseline or base or reference or period or time or timing or interval)	US-PGPUB; USPAT; USOCR; FPRS; EPO; JPO; DERWENT; IBM_TDB	2011/11/03 19:05

	Type	L #	Hits	Search Text	DBs	Time Stamp
14	BRS	L34	146	32 near15 33	US-PGPUB; USPAT; USOCR; FPRS; EPO; JPO; DERWENT; IBM_TDB	2011/11/03 19:06
15	BRS	L35	465218	(motion or move or moved or moving or movement or walk or walking or run or running or jog or jogging or act or acting or action or active or activity or stride) near4 (number or numbered or numbering or count or counted or counting or accumulate or accumulated or accumulating or accumulation)	US-PGPUB; USPAT; USOCR; FPRS; EPO; JPO; DERWENT; IBM_TDB	2011/11/03 19:06

	Type	L #	Hits	Search Text	DBs	Time Stamp
16	BRS	L36	2104668	(motion or move or moved or moving or movement or walk or walking or run or running or jog or jogging or act or acting or action or active or activity or stride) near4 (measure or measured or measuring or measurement or monitor or monitored or monitoring or capture or captured or capturing or detect or detected or detecting or detection or detect$1r or sense or sensed or sensing or sens$1r or transduce or transduced or transducing or transducer or sample or sampled or sampling or sampl$1r or determine or determined or determining or determination or determin$1r or scan or scanned or scanning or scann$1r or met$1r or metered or metering or gauge or gauged or gauging or gaug$1r or gage or gaged or gaging or gag$1r or acquire or acquired or acquiring or acquisition or acquisitioning or acquir$1r or collect or collected or collecting or collection or collect$1r or log or logged or logging or logg$1r or accumulate or accumulated or accumulating or accumulation or accumulat$1r)	US-PGPUB; USPAT; USOCR; FPRS; EPO; JPO; DERWENT; IBM_TDB	2011/11/03 19:08
17	BRS	L37	48913	35 near15 36	US-PGPUB; USPAT; USOCR; FPRS; EPO; JPO; DERWENT; IBM_TDB	2011/11/03 19:08

	Type	L #	Hits	Search Text	DBs	Time Stamp
18	BRS	L38	39	31 and 34 and 37	US-PGPUB; USPAT; USOCR; FPRS; EPO; JPO; DERWENT; IBM_TDB	2011/11/03 19:09
19	BRS	L39	121	1 near15 35	US-PGPUB; USPAT; USOCR; FPRS; EPO; JPO; DERWENT; IBM_TDB	2011/11/03 19:10
20	BRS	L40	3	9 and 39	US-PGPUB; USPAT; USOCR; FPRS; EPO; JPO; DERWENT; IBM_TDB	2011/11/03 19:10
21	BRS	L41	29253	(kahn$1.in. adj2 (p.in. or philippe.in.)) or ((kinsolving$1.in. or kingsolving$1.in.) adj2 (a.in. or arthur.in.)) or (christensen$1.in. adj2 (m.in. or mark.in.)) or (lee$1.in. adj2 (b.in. or brian.in. or brain.in.)) or (vogel$1.in. adj2 (d.in. or david.in.))	US-PGPUB; USPAT; USOCR; FPRS; EPO; JPO; DERWENT; IBM_TDB	2011/11/03 19:10

	Type	L #	Hits	Search Text	DBs	Time Stamp
22	BRS	L42	21	"13"$1"018"$1"321" or "12"$1"694"$1"135" or "7"$1"881"$1"902" or "11"$1"644"$1"455" or "7"$1"653"$1"508" or "60"$1"900"$1"412" or "60"$1"926"$1"027" or "11"$1"891"$1"112" or "2009"$1"0"$1"043"$1"531" or "7"$1"647"$1"196" or "12"$1"069"$1"267" or "12"$1"108"$1"486" or "2009"$1"0"$1"234"$1"614" or "7"$1"987"$1"070" or "12"$1"834"$1"845" or ("20090043531" or "20090234614" or "7647196" or "7653508" or "7881902" or "7987070").pn.	US-PGPUB; USPAT; USOCR; FPRS; EPO; JPO; DERWENT; IBM_TDB	2011/11/03 19:10
23	BRS	L43	1461	"4285041" or "4578769" or "5446725" or "5446775" or "5583776" or "5593431" or "5654619" or "5778882" or "5955667" or "5976083" or "6013007" or "6122595" or "6135951" or "6145389" or "6282496" or "20020023654" or "6353449" or "6369794" or "20020040601" or "20020089425" or "6428490" or "20020109600" or "20020116147" or "20020118121" or "20020151810" or "6493652" or "6496695" or "20030018430" or "20030023192" or "6513381" or "6522266" or "6532419" or "20030048218" or "6539336" or "20030083596" or "20030093248" or "20030109258"	US-PGPUB; USPAT; USOCR; FPRS; EPO; JPO; DERWENT; IBM_TDB	2011/11/03 19:11

	Type	L #	Hits	Search Text	DBs	Time Stamp
24	BRS	L44	572	"20030139692" or "6611789" or "20030208335" or "6644322" or "6700499" or "20040064286" or "20040077954" or "6744403" or "20040107072" or "6771250" or "6786877" or "6790178" or "20040186695" or "6813582" or "20040225467" or "20040230138" or "6823036" or "20040236500" or "6826477" or "20040260191" or "6836744" or "20050021270" or "20050021292" or "20050033200" or "20050038626" or "6881191" or "6885971" or "6895341" or "6898550" or "20050132797" or "6928382" or "6941239" or "20050202934" or "20050210300" or "20050222801" or "20050232388" or "20050232404" or "6959259" or "20050238132" or "20050240375" or "20050248718" or "6975959" or "6983219" or "20060017561" or "20060020177" or "20060020421"	US-PGPUB; USPAT; USOCR; FPRS; EPO; JPO; DERWENT; IBM_TDB	2011/11/03 19:11

	Type	L #	Hits	Search Text	DBs	Time Stamp
25	BRS	L45	387	"7010332" or "20060063980" or "20060064276" or "20060100546" or "20060104018" or "7054784" or "7057551" or "20060136173" or "20060143645" or "7070571" or "7072789" or "20060161377" or "20060167387" or "7092846" or "20060206258" or "20060223547" or "20060235642" or "20060259268" or "7145461" or "7148797" or "20060284979" or "20060288781" or "7158912" or "7169084" or "7171331" or "20070032951" or "7177684" or "20070038364" or "20070061105" or "20070063850" or "20070067094" or "20070073482" or "7200517" or "20070082789" or "7212943" or "7216053" or "7220220" or "20070123806" or "20070125852" or "20070130582" or "20070142715" or "20070150136" or "7254516" or "7255437" or "7263461"	US-PGPUB; USPAT; USOCR; FPRS; EPO; JPO; DERWENT; IBM_TDB	2011/11/03 19:11

	Type	L #	Hits	Search Text	DBs	Time Stamp
26	BRS	L46	167	"20070208530" or "20070208531" or "20070208544" or "20070213126" or "20070250261" or "20070260418" or "20070260482" or "20070259716" or "7297088" or "20070276295" or "7328611" or "7334472" or "7353112" or "7382611" or "7387611" or "20080171918" or "7421369" or "7428471" or "7451056" or "7457719" or "7467060" or "20090015421" or "20090018773" or "20090047645" or "7512515" or "7526402" or "7561960" or "20090213002" or "7586032" or "7608050" or "7617071" or "7627423" or "20090319221" or "7640134" or "7640804" or "7648441" or "7672781" or "20100056872" or "20100057398" or "7679601" or "7725139" or "7747409" or "7752011" or "7753861" or "7774156" or "7857772" or "7883445" or "7962312"	US-PGPUB; USPAT; USOCR; FPRS; EPO; JPO; DERWENT; IBM_TDB	2011/11/03 19:11
27	BRS	L47	704	(2 or 6 or 8 or 31 or 34 or 37 or 39) and (41 or 42 or 43 or 44 or 45 or 46)	US-PGPUB; USPAT; USOCR; FPRS; EPO; JPO; DERWENT; IBM_TDB	2011/11/03 19:12
28	BRS	L48	732	9 or 38 or 40 or 47	US-PGPUB; USPAT; USOCR; FPRS; EPO; JPO; DERWENT; IBM_TDB	2011/11/03 19:13

Reviewed L48 Ti, Ab, Kwic All
/ERC/
03 November 2011

	Type	L #	Hits	Search Text	DBs	Time Stamp
29	BRS	L49	1953	("20030018430" or "6826477").pn. or ((@pd>="19470101" and @pd<="19710101") and (33/700 or 33/701 or 73/1.01 or 73/1.37 or 73/1.38 or 73/1.75 or 73/1.76 or 73/1.77 or 73/1.78 or 73/1.79 or 73/1.81 or 73/432.1 or 73/865.4 or 73/865.8 or 377/1 or 377/13 or 377/15 or 377/17 or 377/19 or 377/20 or 377/24 or 377/24.1 or 377/24.2 or 702/1 or 702/85 or 702/97 or 702/104 or 702/127 or 702/141 or 702/150 or 702/155 or 702/158 or 702/160 or 702/187 or 702/189 or 708/100 or 708/101 or 708/105 or 708/131 or 708/160 or 708/200 or 708/212).ccls.)	US-PGPUB; USPAT; USOCR; FPRS; EPO; JPO; DERWENT; IBM_TDB	2011/11/03 19:15

Reviewed L49 Ti All
/ERC/
03 November 2011

	Document ID	Publication Date	Inventor	Current OR	Current XRef	Pages
1	US 5976083 A	19991102	Richardson; J. Jeffrey et al.	600/300	482/8; 482/901; 600/481; 600/587	34
2	US 6135951 A	20001024	Richardson; J. Jeffrey et al.	600/300	482/8; 600/592; 600/595	32
3	US 6145389 A	20001114	Ebeling; W. H. Carl et al.	73/865.4		14
4	US 6369794 B1	20020409	Sakurai; Yasuhiro et al.	345/156	379/433.04	37
5	US 20020089425 A1	20020711	Kubo, Nobuo et al.	340/573.1	340/669	28
6	US 6611789 B1	20030826	Darley; Jesse	702/160	702/141; 702/142; 702/176	87
7	US 6700499 B2	20040302	Kubo; Nobuo et al.	340/686.1	340/573.1; 340/573.7; 482/3; 482/74; 600/510; 600/552; 600/553; 73/379.01; 73/379.09	27
8	US 20050232388 A1	20051020	Tsuji, Tomoharu	377/24.2		10
9	US 20050238132 A1	20051027	Tsuji, Tomoharu	377/24.2		10

L48 Results
/ERC/
03 November 2011

	Document ID	Publication Date	Inventor	Current OR	Current XRef	Pages
10	US 20060020177 A1	20060126	Seo; Jeong-Wook et al.	600/300	482/8; 600/595	90
11	US 7169084 B2	20070130	Tsuji; Tomoharu	482/8	482/1; 482/9; 702/160	9
12	US 20070061105 A1	20070315	Darley; Jesse et al.	702/182		86
13	US 20070067094 A1	20070322	Park; Kyong-Ha et al.	701/200	702/141	13
14	US 20070208531 A1	20070906	Darley; Jesse et al.	702/142	702/158; 702/178	86
15	US 7297088 B2	20071120	Tsuji; Tomoharu	482/3	377/24.2; 482/8; 482/900; 702/160	10
16	US 7334472 B2	20080226	Seo; Jeong-Wook et al.	73/379.01		89
17	US 7457719 B1	20081125	Kahn; Philippe et al.	702/141		16
18	US 20090043531 A1	20090212	Kahn; Philippe et al.	702/149		22
19	US 20090234614 A1	20090917	Kahn; Philippe et al.	702/141	351/158	18
20	US 20090319221 A1	20091224	Kahn; Philippe et al.	702/141		31

L48 Results
/ERC/
03 November 2011

	Document ID	Publication Date	Inventor	Current OR	Current XRef	Pages
21	US 7647196 B2	20100112	Kahn; Philippe et al.	702/149	702/142; 702/150; 702/154	22
22	US 7653508 B1	20100126	Kahn; Philippe et al.	702/160	33/700; 377/1; 377/13; 377/24.2; 377/25; 702/1; 702/127; 702/155; 702/158; 702/187; 702/189	19
23	US 20100057398 A1	20100304	Darley; Jesse et al.	702/160	702/142	85
24	US 20100056872 A1	20100304	Kahn; Philippe et al.	600/300		22
25	US 7753861 B1	20100713	Kahn; Philippe et al.	600/595	482/8; 482/9; 600/300; 600/301; 600/587	24
26	US 7881902 B1	20110201	Kahn; Philippe et al.	702/160	377/24.2; 702/97	19
27	US 7987070 B2	20110726	Kahn; Philippe et al.	702/160	351/41; 73/1.38	19

L48 Results
/ERC/
03 November 2011

	Document ID	Publication Date	Inventor	Current OR	Current XRef	Pages
1	US 20030018430 A1	20030123	Ladetto, Quentin et al.	701/217	701/200	56
2	US 6826477 B2	20041130	Ladetto; Quentin et al.	701/217	340/944; 701/200; 701/213; 73/178R	58

L49 Results
/ERC/
03 November 2011

UNITED STATES PATENT AND TRADEMARK OFFICE

UNITED STATES DEPARTMENT OF COMMERCE
United States Patent and Trademark Office
Address: COMMISSIONER FOR PATENTS
P.O. Box 1450
Alexandria, Virginia 22313-1450
www.uspto.gov

BIB DATA SHEET

CONFIRMATION NO. 8340

SERIAL NUMBER	FILING or 371(c) DATE RULE	CLASS	GROUP ART UNIT	ATTORNEY DOCKET NO.
13/018,321	01/31/2011	702	2857	8689P027C2

APPLICANTS

Philippe Kahn, Aptos, CA;
Arthur Kinsolving, Santa Cruz, CA;
Mark Andrew Christensen, Santa Cruz, CA;
Brian Y. Lee, Aptos, CA;
David Vogel, Santa Cruz, CA;

**** CONTINUING DATA ***************************

This application is a CON of 12/694,135 01/26/2010 PAT 7,881,902 OK /ERC/
which is a CON of 11/644,455 12/22/2006 PAT 7,653,508

**** FOREIGN APPLICATIONS *************************** NONE /ERC/

**** IF REQUIRED, FOREIGN FILING LICENSE GRANTED ****

03/02/2011

Foreign Priority claimed ☐ Yes ☑ No 35 USC 119(a-d) conditions met ☐ Yes ☑ No Verified and Acknowledged /EDWARD R COSIMANO/ Examiner's Signature	☐ Met after Allowance Initials	STATE OR COUNTRY	SHEETS DRAWINGS	TOTAL CLAIMS	INDEPENDENT CLAIMS
		CA	9	20	4

ADDRESS

BLAKELY SOKOLOFF TAYLOR & ZAFMAN LLP
1279 OAKMEAD PARKWAY
SUNNYVALE, CA 94085-4040
UNITED STATES

TITLE

Human Activity Monitoring Device

FILING FEE RECEIVED		
1310	FEES: Authority has been given in Paper No._____ to charge/credit DEPOSIT ACCOUNT No._____ for following:	☐ All Fees ☐ 1.16 Fees (Filing) ☐ 1.17 Fees (Processing Ext. of time) ☐ 1.18 Fees (Issue) ☐ Other _____ ☐ Credit

BIB (Rev. 05/07).

Search Notes	Application/Control No.	Applicant(s)/Patent Under Reexamination
	13018321	KAHN ET AL.
	Examiner	**Art Unit**
	EDWARD COSIMANO	2857

SEARCHED			
Class	**Subclass**	**Date**	**Examiner**
33	700, 701	11/03/2011	ERC
73	1.01, 1.37, 1.38, 1.75, 1.76, 1.77, 1.78, 1.79, 1.81, 432.1, 865.4, 865.8	11/03/2011	ERC
377	1, 13, 15, 17, 19, 20, 24, 24.1, 24.2	11/03/2011	ERC
702	1, 85, 97, 104, 127, 141, 150, 155, 158, 160, 187, 189	11/03/2011	ERC
708	100, 101, 105, 131, 160, 200, 212	11/03/2011	ERC

SEARCH NOTES		
Search Notes	**Date**	**Examiner**
Inventor Name Search; Continuity Check	10/28/2011	ERC
EAST (USOCR, USPAT, US-PGPUB, DERWENT, EPO, FPRS, JPO, IBM-TDB)	11/03/2011	ERC

INTERFERENCE SEARCH			
Class	**Subclass**	**Date**	**Examiner**

Substitute for Form 1449/PTO				Complete if Known	
INFORMATION DISCLOSURE STATEMENT BY APPLICANT				Application Number	Not yet assigned
(use as many sheets as necessary)				Filing Date	Herewith
				First Named Inventor:	Philippe Kahn
				Art Unit	Not yet assigned
				Examiner Name	Not yet assigned
Sheet	1	**of**	4	Attorney Docket Number	8689P027C2

U.S. PATENT DOCUMENTS

Examiner Initials*	Cite No.[1]	Document Number Number-Kind Code[2] (If known)		Publication Date MM-DD-YYYY	Name of Patentee or Applicant of Cited Document	Pages, Columns, Lines, Where Relevant Passages or Relevant Figures Appear
/E.C./		US-	4,285,041	8/18/1981	Smith	
		US-	4,578,769	3/25/1986	Frederick	
		US-	5,446,725	8/29/1995	Ishiwatari	
		US-	5,446,775	8/25/1995	Wright et al	
		US-	5,593,431	1/14/1997	Sheldon	
		US-	5,955,667	9/21/1999	Fyfe	
		US-	5,976,083	11/2/1999	Richardson, et al.	
		US-	6,013,007	1/11/2000	Root et al	
		US-	6,135,951	10/24/2000	Richardson, et al.	
		US-	6,145,389	11/14/2000	Ebeling, et al.	
		US-	6,369,794	4/9/2002	Sakurai et al	
		US-	6,493,652	12/10/2002	Ohlenbusch et al	
		US-	6,513,381	2/4/2003	Fyfe et al.	
		US-	6,522,266	2/18/2003	Soehren, et al.	
		US-	6,532,419	3/11/2003	Begin, et al.	
		US-	6,539,336	3/25/2003	Vock, et al.	
		US-	6,611,789	8/26/2003	Darley, Jesse	
		US-	6,700,499	3/2/2004	Kubo et al	
		US-	6,790,178	9/14/2004	Mault, et al.	
		US-	6,813,582	11/2/2004	Levi et al.	
		US-	6,823,036	11/23/2004	Chen	
		US-	6,826,477	11/30/2004	Ladetto et al	
		US-	6,836,744	12/28/2004	Asphahani, et al.	
		US-	6,881,191	4/19/2005	Oakley, et al.	
		US-	6,885,971	4/26/2005	Vock, et al.	
		US-	6,898,550	5/24/2005	Blackadar, et al.	
		US-	6,928,382	8/9/2005	Hong et al	
/E.C./		US-	6,941,239	9/6/2005	Unuma, et al.	

Examiner Signature	/Edward Cosimano/	Date Considered	11/03/2011

*EXAMINER: Initial if reference considered, whether or not citation is in conformance with MPEP 609; Draw line through citation if not in conformance and not considered. Include copy of this form with next communication to applicant. [1]Applicant's unique citation designation number (optional). [2]See Kinds Codes of USPTO Patent Documents at www.uspto.gov or MPEP 901.04. [3]Enter Office that issued the document, by the two-letter code (WIPO Standard ST.3). [4]For Japanese patent documents, the indication of the year of reign of the Emperor must precede the serial number of the patent document. [5]Kind of document by the appropriate symbols as indicated on the document under WIPO Standard ST. 16 if possible. [6]Applicant is to place a check mark here if English language translation is attached.

This collection of information is required by 37 CFR 1.97 and 1.98. The information is required to obtain or retain a benefit by the public which is to file (and by the USPTO to process) an application. Confidentiality is governed by 35 U.S.C. 122 and 37 CFR 1.14. This collection is estimated to take 2 hours to complete including gathering, preparing, and submitting the completed application form to the USPTO. Time will vary depending upon the individual case. Any comments on the amount of time you require to complete this form and/or suggestions for reducing this burden, should be sent to the Chief Information Officer, U.S. Patent and Trademark Office, P.O. Box 1450, Alexandria, VA 22313-1450. DO NOT SENT FEES OR COMPLETED FORMS TO THIS ADDRESS. **SEND TO: Commissioner for Patents, P.O. Box 1450, Alexandria, Virginia 22313-1450.**

If you need assistance in completing the form, call 1-800-PTO-9199 (1-800-786-9199) and select option 2.

Substitute for Form 1449/PTO				Complete if Known	
INFORMATION DISCLOSURE STATEMENT BY APPLICANT (use as many sheets as necessary)				Application Number	Not yet assigned
				Filing Date	Herewith
				First Named Inventor:	Philippe Kahn
				Art Unit	Not yet assigned
				Examiner Name	Not yet assigned
Sheet	2	**of**	4	Attorney Docket Number	8689P027C2

U.S. PATENT DOCUMENTS

Examiner Initials*	Cite No.[1]	Document Number Number-Kind Code[2] (If known)		Publication Date MM-DD-YYYY	Name of Patentee or Applicant of Cited Document	Pages, Columns, Lines, Where Relevant Passages or Relevant Figures Appear
/E.C./		US-	6,959,259	10/25/2005	Vock, et al.	
		US-	6,975,959	12/13/2005	Dietrich et al	
		US-	7,010,332	3/7/2006	Irvin et al	
		US-	7,072,789	7/4/2006	Vock, et al.	
		US-	7,092,846	8/15/2006	Vock, et al.	
		US-	7,148,797	12/12/2006	Albert	
		US-	7,158,912	1/20/2007	Vock, et al.	
		US-	7,169,084	1/30/2007	Tsuji, Tomoharu	
		US-	7,171,331	1/30/2007	Vock, et al.	
		US-	7,200,517	4/3/2007	Darley, et al.	
		US-	7,212,943	5/1/2007	Aoshima, et al.	
		US-	7,220,220	5/22/2007	Stubbs, et al.	
		US-	7,297,088	11/20/2007	Tsuji, Tomoharu	
		US-	7,334,472	2/26/2008	Seo et al	
		US-	7,353,112	4/1/2008	Choi et al	
		US-	7,382,611	2/12/2008	Klees, et al.	
		US-	7,387,611	6/17/2008	Inoue et al.	
		US-	7,457,719	11/25/2008	Kahn et al	
		US-	7,526,402	4/28/2009	Tenanhaus et al	
		US-	7,647,196	1/12/2010	Kahn et al	
		US-	7,653,508	1/26/2010	Kahn et al	
		US-	7,753,861	7/13/2010	Kahn et al	
		US-	2002/0089425	7/11/2002	Kubo et al	
		US-	2002/0109600	8/15/2002	Mault, James R.; et al.	
		US-	2002/0151810	10/17/2002	Wong, Philip Lim-Kong; et al.	
		US-	2003/0018430	1/23/2003	Ladetto et al	
		US-	2003/0083596	5/1/2003	Kramer et al	
/E.C./		US-	2003/0109258	6/12/2003	Mantyjarvi et al	

Examiner Signature	/Edward Cosimano/	Date Considered	11/03/2011

*EXAMINER: Initial if reference considered, whether or not citation is in conformance with MPEP 609; Draw line through citation if not in conformance and not considered. Include copy of this form with next communication to applicant. [1]Applicant's unique citation designation number (optional). [2]See Kinds Codes of USPTO Patent Documents at www.uspto.gov or MPEP 901.04. [3]Enter Office that issued the document, by the two-letter code (WIPO Standard ST.3). [4]For Japanese patent documents, the indication of the year of reign of the Emperor must precede the serial number of the patent document. [5]Kind of document by the appropriate symbols as indicated on the document under WIPO Standard ST. 16 if possible. [6]Applicant is to place a check mark here if English language translation is attached.

This collection of information is required by 37 CFR 1.97 and 1.98. The information is required to obtain or retain a benefit by the public which is to file (and by the USPTO to process) an application. Confidentiality is governed by 35 U.S.C. 122 and 37 CFR 1.14. This collection is estimated to take 2 hours to complete including gathering, preparing, and submitting the completed application form to the USPTO. Time will vary depending upon the individual case. Any comments on the amount of time you require to complete this form and/or suggestions for reducing this burden, should be sent to the Chief Information Officer, U.S. Patent and Trademark Office, P.O. Box 1450, Alexandria, VA 22313-1450. DO NOT SENT FEES OR COMPLETED FORMS TO THIS ADDRESS. **SEND TO: Commissioner for Patents, P.O. Box 1450, Alexandria, Virginia 22313-1450**.

If you need assistance in completing the form, call 1-800-PTO-9199 (1-800-786-9199) and select option 2.

Substitute for Form 1449/PTO				Complete if Known	
INFORMATION DISCLOSURE STATEMENT BY APPLICANT (use as many sheets as necessary)				Application Number	Not yet assigned
				Filing Date	Herewith
				First Named Inventor:	Philippe Kahn
				Art Unit	Not yet assigned
				Examiner Name	Not yet assigned
Sheet	3	**of**	4	Attorney Docket Number	8689P027C2

U.S. PATENT DOCUMENTS

Examiner Initials*	Cite No.[1]	Document Number Number-Kind Code[2] (If known)		Publication Date MM-DD-YYYY	Name of Patentee or Applicant of Cited Document	Pages, Columns, Lines, Where Relevant Passages or Relevant Figures Appear
/E.C./		US-	2003/0139692	7/24/2003	Barrey et al	
		US-	2004/0225467	11/11/2004	Vock, Curtis A.; et al.	
		US-	2004/0236500	11/25/2004	Choi et al	
		US-	2005/0033200	2/10/2005	Soehren, Wayne A.; et al.	
		US-	2005/0222801	10/6/2005	Wulff et al	
		US-	2005/0232388	10/20/2005	Tsuji, Tomoharu	
		US-	2005/0232404	10/20/2005	Gaskill	
		US-	2005/0238132	10/27/2005	Tsuji, Tomoharu	
		US-	2005/0240375	10/27/2005	Sugai, Yoshinori	
		US-	2005/0248718	11/10/2005	Howell, Thomas A., et al.	
		US-	2006/0020177	1/26/2006	Seo et al	
		US-	2006/0100546	5/11/2006	Silk, Jeffrey E	
		US-	2006/0136173	6/22/2006	Charles Whipple Jr.; et al.	
		US-	2006/0223547	10/5/2006	Chin et al	
		US-	2007/0061105	3/15/2007	Darley et al	
		US-	2007/0063850	3/22/2007	Devaul; Richard W.; et al.	
		US-	2007/0067094	3/22/2007	Park et al	
		US-	2007/0082789	4/12/2007	Nissila et al	
		US-	2007/0125852	6/7/2007	Rosenberg	
		US-	2007/0142715	6/21/2007	Banet et al.	
		US-	2007/0208531	9/6/2007	Darley et al	
		US-	2009/0043531	2/12/2009	Kahn et al	
		US-	2009/0234614	9/17/2009	Kahn et al	
		US-	2009/0319221	12/24/2009	Kahn et al	
		US-	2010/0056872	3/4/2010	Kahn et al	
/E.C./		US-	2010/0057398	3/4/2010	Darley et al	
		US-				

Examiner Signature	/Edward Cosimano/	Date Considered	11/03/2011

*EXAMINER: Initial if reference considered, whether or not citation is in conformance with MPEP 609; Draw line through citation if not in conformance and not considered. Include copy of this form with next communication to applicant. [1]Applicant's unique citation designation number (optional). [2]See Kinds Codes of USPTO Patent Documents at www.uspto.gov or MPEP 901.04. [3]Enter Office that issued the document, by the two-letter code (WIPO Standard ST.3). [4]For Japanese patent documents, the indication of the year of reign of the Emperor must precede the serial number of the patent document. [5]Kind of document by the appropriate symbols as indicated on the document under WIPO Standard ST. 16 if possible. [6]Applicant is to place a check mark here if English language translation is attached.

This collection of information is required by 37 CFR 1.97 and 1.98. The information is required to obtain or retain a benefit by the public which is to file (and by the USPTO to process) an application. Confidentiality is governed by 35 U.S.C. 122 and 37 CFR 1.14. This collection is estimated to take 2 hours to complete including gathering, preparing, and submitting the completed application form to the USPTO. Time will vary depending upon the individual case. Any comments on the amount of time you require to complete this form and/or suggestions for reducing this burden, should be sent to the Chief Information Officer, U.S. Patent and Trademark Office, P.O. Box 1450, Alexandria, VA 22313-1450. DO NOT SENT FEES OR COMPLETED FORMS TO THIS ADDRESS. **SEND TO: Commissioner for Patents, P.O. Box 1450, Alexandria, Virginia 22313-1450**.

If you need assistance in completing the form, call 1-800-PTO-9199 (1-800-786-9199) and select option 2.

Substitute for Form 1449/PTO				Complete if Known	
INFORMATION DISCLOSURE STATEMENT BY APPLICANT (use as many sheets as necessary)				Application Number	Not yet assigned
				Filing Date	Herewith
				First Named Inventor:	Philippe Kahn
				Art Unit	Not yet assigned
				Examiner Name	Not yet assigned
Sheet	4	of	4	Attorney Docket Number	8689P027C2

NON PATENT LITERATURE DOCUMENTS

Examiner Initials*	Cite No[1]	Include name of the author (in CAPITAL LETTERS), title of the article (when appropriate), title of the item (book, magazine, journal, serial, symposium, catalog, etc.), date, page(s), volume-issue number(s), publisher, city and/or country where published	T[2]
/E.C./		BOURZAC, Katherine "Wearable Health Reports," Technology Review, February 28, 2006, http://www.techreview.com/printer_friendly_article_aspx?id+16431, 3/22/2007, 3 pages.	
/E.C./		DAO, Ricardo, "Inclination Sensing with Thermal Accelerometers", MEMSIC, May 2002, 3 pages.	
/E.C./		LEE, SEON-WOO, et al., "Recognition of Walking Behaviors for Pedestrian Navigation," ATR Media Integration & Communications Research Laboratories, Kyoto, Japan, 4 pages. NO DATE	
/E.C./		MARGARIA, Rodolfo, "Biomechanics and Energetics of Muscular Exercise", Chapter 3, pages 105-125, Oxford: Clarendon Press 1976.	
/E.C./		MIZELL, David, "Using Gravity to Estimate Accelerometer Orientation", Seventh IEEE International Symposium on Wearable Computers, 2003, 2 pages.	
/E.C./		ORMONEIT, D., et al., "Learning and Tracking Cyclic Human Motion," Encyclopedia of Library and Information Science, volume 53, supplement 16, 2001, 7 pages.	
/E.C./		PCT International Search Report and Written Opinion for International Application No. PCT/US2008/072537, mailed 22 October 2008, 10 pages.	
/E.C./		PCT International Search Report and Written Opinion for International Application No. PCT/US2009/48523, mailed 27 August 2009, 8 pages.	
/E.C./		WEINBERG, Harvey, "MEMS Motion Sensors Boost Handset Reliability" June 2006, http://www.mwrf.com/Articles/Print.cfm?ArticleID=12740, February 21, 2007, 4 pages.	

Examiner Signature	/Edward Cosimano/	Date Considered	11/03/2011

*Examiner: Initial if reference considered, whether or not citation is in conformance with MPEP 609. Draw line through citation if not in conformance and not considered. Include copy of this form with next communication to applicant.

[1]Applicant's unique citation designation number (optional). [2]Applicant is to place a check mark here if English Translation is attached.

This collection of information is required by 37 CFR 1.98. The information is required to obtain or retain a benefit by the public which is to file (and by the USPTO to process) an application. Confidentiality is governed by 35 U.S.C. 122 and 37 CFR 1.14. This collection is estimated to take 2 hours to complete including gathering, preparing, and submitting the completed application form to the USPTO. Time will vary depending upon the individual case. Any comments on the amount of time you require to complete this form and/or suggestions for reducing this burden, should be sent to the Chief Information Officer, U.S. Patent and Trademark Office, P.O. Box 1450, Alexandria, VA 22313-1450. DO NOT SENT FEES OR COMPLETED FORMS TO THIS ADDRESS. **SEND TO: Commissioner for Patents, P.O. Box 1450, Alexandria, Virginia 22313-1450.**

If you need assistance in completing the form, call 1-800-PTO-9199 (1-800-786-9199) and select option 2.

Substitute for Form 1449/PTO				Complete if Known	
INFORMATION DISCLOSURE STATEMENT BY APPLICANT				Application Number	13/018,321
(use as many sheets as necessary)				Filing Date	Herewith
				First Named Inventor:	Philippe Kahn
				Art Unit	2857
				Examiner Name	Not yet assigned
Sheet	1	**of**	3	Attorney Docket Number	8689P027C2

U.S. PATENT DOCUMENTS

Examiner Initials*	Cite No.[1]	Document Number Number-Kind Code[2] (If known)		Publication Date MM-DD-YYYY	Name of Patentee or Applicant of Cited Document	Pages, Columns, Lines, Where Relevant Passages or Relevant Figures Appear
		US-	6,353,449	3/5/2002	Gregg et al	
		US-	6,771,250	8/3/2004	Oh	
		US-	7,054,784	5/30/2006	Flentov et al	
		US-	7,057,551	6/6/2006	Vogt, Mark J	
		US-	7,451,056	11/11/2008	Flentov et al	
		US-	7,467,060	12/16/2008	Kulach et al	
		US-	7,512,515	3/31/2009	Vock et al	
		US-	7,608,050	10/27/2009	Sugg, Christoper John	
		US-	7,640,804	1/5/2010	Daumer et al	
		US-	7,647,196	11/12/2010	Kahn et al	
		US-	7,752,011	7/6/2010	Niva et al	
		US-	7,774,156	8/10/2010	Niva et al	
		US-	7,857,772	12/28/2010	Bouvier et al	
		US-	2002/0118121	8/29/2002	Lehrman et al	
		US-	2005/0202934	9/15/2005	Olrik et al	
		US-	2005/0210300	9/22/2005	Song et al	
		US-	2006/0063980	3/23/2006	Hwang et al	
		US-	2006/0064276	3/23/2006	Ren et al	
		US-	2006/0161377	7/20/2006	Rakkola et al	
		US-	2006/0259268	11/16/2006	Vock et al	
		US-	2006/0284979	12/21/2006	Clarkson, Brian	
		US-	2007/0038364	2/15/2007	Lee et al	
		US-	2007/0073482	3/29/2007	Churchill et al	
		US-	2007/0150136	6/28/2007	Doll et al	
		US-	2007/0213126	9/13/2007	Deutsch et al	
		US-	2007/0259716	11/8/2007	Mattice et al	
		US-	2007/0260482	11/8/2007	Nurmela et al	
		US-	2009/0047645	2/19/2009	Dibenedetto et al	

Examiner Signature		Date Considered	

*EXAMINER: Initial if reference considered, whether or not citation is in conformance with MPEP 609; Draw line through citation if not in conformance and not considered. Include copy of this form with next communication to applicant. [1]Applicant's unique citation designation number (optional). [2]See Kinds Codes of USPTO Patent Documents at www.uspto.gov or MPEP 901.04. [3]Enter Office that issued the document, by the two-letter code (WIPO Standard ST.3). [4]For Japanese patent documents, the indication of the year of reign of the Emperor must precede the serial number of the patent document. [5]Kind of document by the appropriate symbols as indicated on the document under WIPO Standard ST. 16 if possible. [6]Applicant is to place a check mark here if English language translation is attached.

This collection of information is required by 37 CFR 1.97 and 1.98. The information is required to obtain or retain a benefit by the public which is to file (and by the USPTO to process) an application. Confidentiality is governed by 35 U.S.C. 122 and 37 CFR 1.14. This collection is estimated to take 2 hours to complete including gathering, preparing, and submitting the completed application form to the USPTO. Time will vary depending upon the individual case. Any comments on the amount of time you require to complete this form and/or suggestions for reducing this burden, should be sent to the Chief Information Officer, U.S. Patent and Trademark Office, P.O. Box 1450, Alexandria, VA 22313-1450. DO NOT SENT FEES OR COMPLETED FORMS TO THIS ADDRESS. **SEND TO: Commissioner for Patents, P.O. Box 1450, Alexandria, Virginia 22313-1450.**

If you need assistance in completing the form, call 1-800-PTO-9199 (1-800-786-9199) and select option 2.

Substitute for Form 1449/PTO				Complete if Known	
INFORMATION DISCLOSURE STATEMENT BY APPLICANT *(use as many sheets as necessary)*				Application Number	13/018,321
				Filing Date	Herewith
				First Named Inventor:	Philippe Kahn
				Art Unit	2857
				Examiner Name	Not yet assigned
Sheet	2	**of**	3	Attorney Docket Number	8689P027C2

NON PATENT LITERATURE DOCUMENTS

Examiner Initials*	Cite No[1]	Include name of the author (in CAPITAL LETTERS), title of the article (when appropriate), title of the item (book, magazine, journal, serial, symposium, catalog, etc.), date, page(s), volume-issue number(s), publisher, city and/or country where published	T[2]
		ANDERSON, Ian, et al, "Shakra: Tracking and Sharing Daily Activity Levels with Unaugmented Mobile Phones," Mobile Netw Appl, 8/3/2007, pp 185-199	
		AYLWARD, Ryan, et al, "Sensemble: A Wireless, Compact, Multi-User Sensor System for Interactive Dance," International Conference on New Interfaces for Musical Expression (NIME06), June 4-8, 2006, pp 134-139	
		BACA, Arnold, et al, "Rapid Feedback Systems for Elite Sports Training," IEEE Pervasive Computing, October-December 2006, pp 70-76	
		BAKHRU, Kesh, "A Seamless Tracking Solution for Indoor and Outdoor Position Location," IEEE 16th International Symposium on Personal, Indoor, and Mobile Radio Communications, 2005, pp 2029-2033	
		BLILEY, Kara E, et al, "A Miniaturized Low Power Personal Motion Analysis Logger Utilizing MEMS Accelerometers and Low Power Microcontroller," IEEE EMBS Special Topic Conference on Microtechnologies in Medicine and Biology, May 12-15, 2005, pp 92-93	
		FANG, Lei, et al, "Design of a Wireless Assisted Pedestrian Dead Reckoning System--The NavMote Experience," IEEE Transactions on Instrumentation and Measurement, Vol 54, No 6, December 2005, pp 2342-2358	
		HEALEY, Jennifer, et al, "Wearable Wellness Monitoring Using ECG and Accelerometer Data," IEEE Int. Symposium on Wearable Computers (ISWC'05), 2005, 2 pages	
		HEMMES, Jeffrey, et al, "Lessons Learned Building TeamTrak: An Urban/Outdoor Mobile Testbed," 2007 IEEE Int. Conf. on Wireless Algorithms, August 1-3, 2007, pp 219-224	
		JOVANOV, Emil, et al, "A Wireless Body Area Network of Intelligent Motion Sensors for Computer Assisted Physical Rehabilitation," Journal of NeuroEngineering and Rehabilitation, March 2005, 10 pages	
		KALPAXIS, Alex, "Wireless Temporal-Spatial Human Mobility Analysis Using Real-Time Three Dimensional Acceleration Data," IEEE Intl. Multi-Conf. on Computing in Global IT (ICCGI'07), 2007, 7 pages	

Examiner Signature		Date Considered	

*Examiner: Initial if reference considered, whether or not citation is in conformance with MPEP 609. Draw line through citation if not in conformance and not considered. Include copy of this form with next communication to applicant.

[1]Applicant's unique citation designation number (optional). [2]Applicant is to place a check mark here if English Translation is attached.

This collection of information is required by 37 CFR 1.98. The information is required to obtain or retain a benefit by the public which is to file (and by the USPTO to process) an application. Confidentiality is governed by 35 U.S.C. 122 and 37 CFR 1.14. This collection is estimated to take 2 hours to complete including gathering, preparing, and submitting the completed application form to the USPTO. Time will vary depending upon the individual case. Any comments on the amount of time you require to complete this form and/or suggestions for reducing this burden, should be sent to the Chief Information Officer, U.S. Patent and Trademark Office, P.O. Box 1450, Alexandria, VA 22313-1450. DO NOT SENT FEES OR COMPLETED FORMS TO THIS ADDRESS. **SEND TO: Commissioner for Patents, P.O. Box 1450, Alexandria, Virginia 22313-1450.**

If you need assistance in completing the form, call 1-800-PTO-9199 (1-800-786-9199) and select option 2.

Substitute for Form 1449/PTO				Complete if Known	
INFORMATION DISCLOSURE STATEMENT BY APPLICANT *(use as many sheets as necessary)*				Application Number	13/018,321
				Filing Date	Herewith
				First Named Inventor:	Philippe Kahn
				Art Unit	2857
				Examiner Name	Not yet assigned
Sheet	3	**of**	3	Attorney Docket Number	8689P027C2

NON PATENT LITERATURE DOCUMENTS

Examiner Initials*	Cite No[1]	Include name of the author (in CAPITAL LETTERS), title of the article (when appropriate), title of the item (book, magazine, journal, serial, symposium, catalog, etc.), date, page(s), volume-issue number(s), publisher, city and/or country where published	T[2]
		MILENKOVIC, Milena, et al, "An Accelerometer-Based Physical Rehabilitation System," IEEE SouthEastern Symposium on System Theory, 2002, pp 57-60	
		OTTO, Chris, et al, "System Architecture of a Wireless Body Area Sensor Network for Ubiquitous Health Monitoring," Journal of Mobile Multimedia, Vol 1, No 4, 2006, pp 307-326	
		PARK, Chulsung, et al, "Eco: An Ultra-Compact Low-Power Wireless Sensor Node for Real-Time Motion Monitoring," IEEE Int. Symp. on Information Processing in Sensor Networks, 2005, pp 398-403	
		SHEN, Chien-Lung, et al, "Wearable Band Using a Fabric-Based Sensor for Exercise ECG Monitoring," IEEE Int. Symp. on Wearable Computers, 2006, 2 pages	
		TAPIA, Emmanuel Munguia, et al, "Real-Time Recognition of Physical Activities and Their Intensities Using Wireless Accelerometers and a Heart Rate Monitor," IEEE Cont. on Wearable Computers, October 2007, 4 pages	
		WIXTED, Andrew J, et al, "Measurement of Energy Expenditure in Elite Athletes Using MEMS-Based Triaxial Accelerometers," IEEE Sensors Journal, Vol 7, No 4, April 2007, pp 481-488	
		WU, Winston H, et al, "Context-Aware Sensing of Physiological Signals," IEEE Int. Conf. on Engineering for Medicine and Biology, August 23-26, 2007, pp 5271-5275	

Examiner Signature		Date Considered	

*Examiner: Initial if reference considered, whether or not citation is in conformance with MPEP 609. Draw line through citation if not in conformance and not considered. Include copy of this form with next communication to applicant.

[1]Applicant's unique citation designation number (optional). [2]Applicant is to place a check mark here if English Translation is attached.

This collection of information is required by 37 CFR 1.98. The information is required to obtain or retain a benefit by the public which is to file (and by the USPTO to process) an application. Confidentiality is governed by 35 U.S.C. 122 and 37 CFR 1.14. This collection is estimated to take 2 hours to complete including gathering, preparing, and submitting the completed application form to the USPTO. Time will vary depending upon the individual case. Any comments on the amount of time you require to complete this form and/or suggestions for reducing this burden, should be sent to the Chief Information Officer, U.S. Patent and Trademark Office, P.O. Box 1450, Alexandria, VA 22313-1450. DO NOT SENT FEES OR COMPLETED FORMS TO THIS ADDRESS. **SEND TO: Commissioner for Patents, P.O. Box 1450, Alexandria, Virginia 22313-1450.**

If you need assistance in completing the form, call 1-800-PTO-9199 (1-800-786-9199) and select option 2.

Electronic Acknowledgement Receipt	
EFS ID:	10565029
Application Number:	13018321
International Application Number:	
Confirmation Number:	8340
Title of Invention:	Human Activity Monitoring Device
First Named Inventor/Applicant Name:	Philippe Kahn
Customer Number:	08791
Filer:	Judith A. Szepesi
Filer Authorized By:	
Attorney Docket Number:	8689P027C2
Receipt Date:	21-JUL-2011
Filing Date:	31-JAN-2011
Time Stamp:	02:35:58
Application Type:	Utility under 35 USC 111(a)

Payment information:

Submitted with Payment	no

File Listing:

Document Number	Document Description	File Name	File Size(Bytes)/ Message Digest	Multi Part /.zip	Pages (if appl.)
1	Non Patent Literature	8689P027C2_NPL1_Anderson.pdf	767816 6e8892c73f139cd369080864d24db2d6e13dca40	no	15

Warnings:

Information:

2	Non Patent Literature	8689P027C2_NPL2_Aylward.pdf	1198346 6a214e794c7df6c165b26e79955c4532d8e3cb4e	no	6
Warnings:					
Information:					
3	Non Patent Literature	8689P027C2_NPL3_Baca.pdf	4594908 749c7d4c574ce4587b8c02b6da9f44a62997119b	no	7
Warnings:					
Information:					
4	Non Patent Literature	8689P027C2_NPL4_Bakhru.pdf	4253994 9ea5bbb23853bbe8948316eef5dfc7baf87dcd95	no	5
Warnings:					
Information:					
5	Non Patent Literature	8689P027C2_NPL5_Bliley.pdf	1610925 fbb0291b1f9413ae30d606d6ab93557a23e9242d	no	2
Warnings:					
Information:					
6	Non Patent Literature	8689P027C2_NPL6_Fang.pdf	2722634 69d5bc11e94ad32313db0650368d96431f7ad298	no	17
Warnings:					
Information:					
7	Non Patent Literature	8689P027C2_NPL7_Healey.pdf	166772 f0c7df709cef00d87b3d25f553616c3c862afc11	no	2
Warnings:					
Information:					
8	Non Patent Literature	8689P027C2_NPL8_Hemmes.pdf	907905 a44adb65123b1a1c2986b38f72d0d7895607789f	no	6
Warnings:					
Information:					
9	Non Patent Literature	8689P027C2_NPL9_Jovanov.pdf	1453931 6a1a2c5c61cbf27f05716ede34e22ae1962c5182	no	10
Warnings:					
Information:					
10	Non Patent Literature	8689P027C2_NPL10_Kalpaxis.pdf	324099 097c0f2fe09908a919870231b0956707f5c76376	no	7
Warnings:					
Information:					

11	Non Patent Literature	8689P027C2_NPL11_Milenkovic.pdf	1317357 809e92287a4cec94f31e2ffa9b32be4901fa6128	no	4
Warnings:					
Information:					
12	Non Patent Literature	8689P027C2_NPL12_Otto.pdf	1368274 95a7b0cad7eafaa296f63e658cce406da85bfa63	no	20
Warnings:					
Information:					
13	Non Patent Literature	8689P027C2_NPL13_Park.pdf	1824153 9bad2be09da53aea40372429d5e2484d469cafde	no	6
Warnings:					
Information:					
14	Non Patent Literature	8689P027C2_NPL14_Shen.pdf	218001 4c1bec52130473cf63d828a92fde235dd2201026	no	2
Warnings:					
Information:					
15	Non Patent Literature	8689P027C2_NPL15_Tapia.pdf	450067 fa1e1a7bd7c9447e2c34535a044c403f66ab682e	no	4
Warnings:					
Information:					
16	Non Patent Literature	8689P027C2_NPL16_Wixted.pdf	639050 6709829b3b71a2648b5a2465ee0d85987ec9da9a	no	8
Warnings:					
Information:					
17	Non Patent Literature	8689P027C2_NPL17_Wu.pdf	420501 028751581062589f1be62687bf2f684e3b4c9990	no	5
Warnings:					
Information:					
18		8689P027C2_IDS_and_SB08.pdf	74661 ea31ffdeb2f7f10146cfbb82114a7866ac819812	yes	5

Multipart Description/PDF files in .zip description

Document Description	Start	End
Transmittal Letter	1	2
Information Disclosure Statement (IDS) Form (SB08)	3	5

Warnings:	
Information:	
Total Files Size (in bytes):	24313394

This Acknowledgement Receipt evidences receipt on the noted date by the USPTO of the indicated documents, characterized by the applicant, and including page counts, where applicable. It serves as evidence of receipt similar to a Post Card, as described in MPEP 503.

New Applications Under 35 U.S.C. 111

If a new application is being filed and the application includes the necessary components for a filing date (see 37 CFR 1.53(b)-(d) and MPEP 506), a Filing Receipt (37 CFR 1.54) will be issued in due course and the date shown on this Acknowledgement Receipt will establish the filing date of the application.

National Stage of an International Application under 35 U.S.C. 371

If a timely submission to enter the national stage of an international application is compliant with the conditions of 35 U.S.C. 371 and other applicable requirements a Form PCT/DO/EO/903 indicating acceptance of the application as a national stage submission under 35 U.S.C. 371 will be issued in addition to the Filing Receipt, in due course.

New International Application Filed with the USPTO as a Receiving Office

If a new international application is being filed and the international application includes the necessary components for an international filing date (see PCT Article 11 and MPEP 1810), a Notification of the International Application Number and of the International Filing Date (Form PCT/RO/105) will be issued in due course, subject to prescriptions concerning national security, and the date shown on this Acknowledgement Receipt will establish the international filing date of the application.

Attorney's Docket No. 8689P027C2 PATENT

IN THE UNITED STATES PATENT AND TRADEMARK OFFICE

Applicant	: Philippe Kahn, et al.	Examiner:	Not yet assigned
Appl. No.	: 13/018,321	Art Unit:	2857
Filed	: January 31, 2011	Conf No:	8340
For	: Human Activity Monitoring Device		
Customer No.	: 08791		

CERTIFICATE OF TRANSMISSION
I hereby certify that this correspondence is being submitted electronically via EFS Web on the date shown below.

/Judith Szepesi/ July 20, 2011
Judith A. Szepesi ***Date***

Mail Stop Amendment
Commissioner for Patents
P.O. Box 1450
Alexandria, Virginia 22313-1450

INFORMATION DISCLOSURE STATEMENT

Sir:

Enclosed is a copy of Information Disclosure Citation Form PTO-1449 or PTO/SB/08 together with copies of the documents cited on that form, except for copies not required to be submitted (e.g., copies of U.S. patents and U.S. published patent applications need not be enclosed). It is respectfully requested that the cited documents be considered and that the enclosed copy of Information Disclosure Citation Form PTO-1449 or PTO/SB/08 be initialed by the Examiner to indicate such consideration and a copy thereof returned to applicant(s).

Pursuant to 37 C.F.R. § 1.97, the submission of this Information Disclosure Statement is not to be construed as a representation that a search has been made and is not to be construed as an admission that the information cited in this statement is material to patentability.

LGE v. Uniloc USA Page 335 of 454 LGE Exhibit 1002

Pursuant to 37 C.F.R. § 1.97, this Information Disclosure Statement is being submitted under one of the following (as indicated by an "X" to the left of the appropriate paragraph):

__X__ 37 C.F.R. §1.97(b).

_____ 37 C.F.R. §1.97(c). If so, then enclosed with this Information Disclosure Statement is one of the following:

____ A statement pursuant to 37 C.F.R. §1.97(e) or

____ The Director is Authorized to charge in the amount of $180.00 for the fee under 37 C.F.R. § 1.17(p).

_____ 37 C.F.R. §1.97(d). If so, then enclosed with this Information Disclosure Statement are the following:

(1) A statement pursuant to 37 C.F.R. §1.97(e); and

(2) A check for $180.00 for the fee under 37 C.F.R. §1.17(p) for submission of the Information Disclosure Statement.

If there are any additional charges, please charge Deposit Account No. 02-2666.

Respectfully submitted,

BLAKELY, SOKOLOFF, TAYLOR & ZAFMAN LLP

Dated: July 20, 2011

/Judith Szepesi/
Judith A. Szepesi
Reg. No. 39,393

1279 Oakmead Parkway
Sunnyvale, CA 94085
(408) 720-8300

Substitute for Form 1449/PTO				Complete if Known	
INFORMATION DISCLOSURE STATEMENT BY APPLICANT				Application Number	13/018,321
(use as many sheets as necessary)				Filing Date	Herewith
				First Named Inventor:	Philippe Kahn
				Art Unit	2857
				Examiner Name	Not yet assigned
Sheet	1	**of**	3	Attorney Docket Number	8689P027C2

U.S. PATENT DOCUMENTS

Examiner Initials*	Cite No.[1]	Document Number Number-Kind Code[2] (If known)		Publication Date MM-DD-YYYY	Name of Patentee or Applicant of Cited Document	Pages, Columns, Lines, Where Relevant Passages or Relevant Figures Appear
		US-	5,446,775	8/25/1995	Wright et al	
		US-	5,583,776	12/10/1996	Levi et al	
		US-	5,654,619	8/5/1997	Iwashita, Yasusuke	
		US-	5,778,882	7/14/1998	Raymond et al	
		US-	6,122,595	9/19/2000	Varley et al	
		US-	6,282,496	8/28/2001	Chowdhary	
		US-	6,428,490	8/6/2002	Kramer et al	
		US-	6,496,695	12/17/2002	Kouji et al	
		US-	6,786,877	9/7/2004	Foxlin	
		US-	7,177,684	2/13/2007	Kroll et al	
		US-	2002/0023654	2/28/2002	Webb, James D	
		US-	2002/0118121	8/29/2002	Lehrman et al	
		US-	2003/0048218	3/13/2003	Milnes et al	
		US-	2006/0167387	7/27/2006	Buchholz et al	
		US-	2006/0206258	9/14/2006	Brooks, Amanda S.	
		US-	2006/0284979	12/21/2006	Clarkson, Brian	
		US-	2006/0288781	12/28/2006	Daumer et al	
		US-	2007/0038364	2/15/2007	Lee et al	
		US-	2007/0130582	6/7/2007	Chang et al	
		US-	2007/0250261	10/25/2007	Soehren	
		US-	2007/0260418	11/8/2007	Ladetto et al	
		US-	2008/0171918	7/17/2008	Teller et al	
		US-	2009/0213002	8/27/2009	Rani et al	
		US-				
		US-				
		US-				
		US-				
		US-				

Examiner Signature		Date Considered	

*EXAMINER: Initial if reference considered, whether or not citation is in conformance with MPEP 609; Draw line through citation if not in conformance and not considered. Include copy of this form with next communication to applicant. [1]Applicant's unique citation designation number (optional). [2]See Kinds Codes of USPTO Patent Documents at www.uspto.gov or MPEP 901.04. [3]Enter Office that issued the document, by the two-letter code (WIPO Standard ST.3). [4]For Japanese patent documents, the indication of the year of reign of the Emperor must precede the serial number of the patent document. [5]Kind of document by the appropriate symbols as indicated on the document under WIPO Standard ST. 16 if possible. [6]Applicant is to place a check mark here if English language translation is attached.

This collection of information is required by 37 CFR 1.97 and 1.98. The information is required to obtain or retain a benefit by the public which is to file (and by the USPTO to process) an application. Confidentiality is governed by 35 U.S.C. 122 and 37 CFR 1.14. This collection is estimated to take 2 hours to complete including gathering, preparing, and submitting the completed application form to the USPTO. Time will vary depending upon the individual case. Any comments on the amount of time you require to complete this form and/or suggestions for reducing this burden, should be sent to the Chief Information Officer, U.S. Patent and Trademark Office, P.O. Box 1450, Alexandria, VA 22313-1450. DO NOT SENT FEES OR COMPLETED FORMS TO THIS ADDRESS. **SEND TO: Commissioner for Patents, P.O. Box 1450, Alexandria, Virginia 22313-1450.**

If you need assistance in completing the form, call 1-800-PTO-9199 (1-800-786-9199) and select option 2.

Substitute for Form 1449/PTO				Complete if Known	
INFORMATION DISCLOSURE STATEMENT BY APPLICANT				Application Number	13/018,321
(use as many sheets as necessary)				Filing Date	Herewith
				First Named Inventor:	Philippe Kahn
				Art Unit	2857
				Examiner Name	Not yet assigned
Sheet	2	**of**	3	Attorney Docket Number	8689P027C2

NON PATENT LITERATURE DOCUMENTS

Examiner Initials*	Cite No[1]	Include name of the author (in CAPITAL LETTERS), title of the article (when appropriate), title of the item (book, magazine, journal, serial, symposium, catalog, etc.), date, page(s), volume-issue number(s), publisher, city and/or country where published	T[2]
		BOURZAC, Katherine "Wearable Health Reports," Technology Review, February 28, 2006, <http://www.techreview.com/printer_friendly_article_aspx?id+16431>, 3/22/2007, 3 pages	
		CHENG, et al, "Periodic Human Motion Description for Sports Video Databases," Proceedings of the Pattern Recognition, 2004, 5 pages	
		DAO, Ricardo, "Inclination Sensing with Thermal Accelerometers", MEMSIC, May 2002, 3 pages	
		Heart Rate Monitors, <http://www.suunto.com/suunto/Worlds/main/world_article_product_no_ATL.jsp?CONTENT%3C%3Ecnt_id=10134198673968765&FOLDER%3C%3Efolder_d=9852723697225397&ASSORTMENT%3C%3East_id=1408474395903593&bmUID=1174532640618speed>, 4/4/2007, 1 page	
		JONES, L, et al, "Wireless Physiological Sensor System for Ambulatory Use," <http://ieeexplore.ieee.org/xpl/freeabs_all.jsp?tp=&arnumber=1612917&isnumber=33861>, April 3-5, 2006	
		LEE, SEON-WOO, et al., "Recognition of Walking Behaviors for Pedestrian Navigation," ATR Media Integration & Communications Research Laboratories, Kyoto, Japan, 4 pages	
		MARGARIA, Rodolfo, "Biomechanics and Energetics of Muscular Exercise", Chapter 3, pages 105-125, Oxford: Clarendon Press 1976	
		MIZELL, David, "Using Gravity to Estimate Accelerometer Orientation", Seventh IEEE International Symposium on Wearable Computers, 2003, 2 pages	
		ORMONEIT, D., et al (2000). Learning and tracking of cyclic human motion. Proceedings of NIPS 2000 (Neural Information Processing Systems), Denver, CO, pp 894-900	
		PCT International Search Report and Written Opinion for International Application No. PCT/US2008/072537, mailed 22 October 2008, 10 pages	

Examiner Signature		Date Considered	

*Examiner: Initial if reference considered, whether or not citation is in conformance with MPEP 609. Draw line through citation if not in conformance and not considered. Include copy of this form with next communication to applicant.

[1]Applicant's unique citation designation number (optional). [2]Applicant is to place a check mark here if English Translation is attached.

This collection of information is required by 37 CFR 1.98. The information is required to obtain or retain a benefit by the public which is to file (and by the USPTO to process) an application. Confidentiality is governed by 35 U.S.C. 122 and 37 CFR 1.14. This collection is estimated to take 2 hours to complete including gathering, preparing, and submitting the completed application form to the USPTO. Time will vary depending upon the individual case. Any comments on the amount of time you require to complete this form and/or suggestions for reducing this burden, should be sent to the Chief Information Officer, U.S. Patent and Trademark Office, P.O. Box 1450, Alexandria, VA 22313-1450. DO NOT SENT FEES OR COMPLETED FORMS TO THIS ADDRESS. **SEND TO: Commissioner for Patents, P.O. Box 1450, Alexandria, Virginia 22313-1450.**

If you need assistance in completing the form, call 1-800-PTO-9199 (1-800-786-9199) and select option 2.

Substitute for Form 1449/PTO				Complete if Known	
INFORMATION DISCLOSURE STATEMENT BY APPLICANT				Application Number	13/018,321
(use as many sheets as necessary)				Filing Date	Herewith
				First Named Inventor:	Philippe Kahn
				Art Unit	2857
				Examiner Name	Not yet assigned
Sheet	3	**of**	3	Attorney Docket Number	8689P027C2

NON PATENT LITERATURE DOCUMENTS

Examiner Initials*	Cite No[1]	Include name of the author (in CAPITAL LETTERS), title of the article (when appropriate), title of the item (book, magazine, journal, serial, symposium, catalog, etc.), date, page(s), volume-issue number(s), publisher, city and/or country where published	T[2]
		PCT International Search Report and Written Opinion for PCT/US2009/48523, mailed 8/27/2009, 8 pages	
		"Sensor Fusion," <www.u-dynamics.com>, accessed 8/29/2008, 2 pages	
		SINHA, Alex, "Heart Monitoring Training," <http://www.marathonguide.com/training/articles/HeartMonitorTraining.cfm>, 4/4/2007, 5 pages	
		WANG, Shu, et al, "Location Based Services for Mobiles: Technologies and Standards, LG Electronics MobileComm," IEEE ICC 2008, Beijing, pages 1-66 (part 1 of 3)	
		WANG, Shu, et al, "Location Based Services for Mobiles: Technologies and Standards, LG Electronics MobileComm," IEEE ICC 2008, Beijing, pages 67-92 (part 2 of 3)	
		WANG, Shu, et al, "Location Based Services for Mobiles: Technologies and Standards, LG Electronics MobileComm," IEEE ICC 2008, Beijing, pages 93-123 (part 3 of 3)	
		WECKESSER, P, et al, "Multiple Sensorprocessing for High-Precision Navigation and Environmental Modeling with a Mobile Robot," IEEE, 1995, pp 453-458	
		WEINBERG, Harvey, "MEMS Motion Sensors Boost Handset Reliability" June 2006, <http://www.mwrf.com/Articles/Print.cfm?ArticleID=12740>, February 21, 2007, 3 pages	
		YOO, CHANG-SUN, et al, "Low Cost GPS/INS Sensor Fusion System for UAV Navigation," IEEE, 2003, 9 pages	

Examiner Signature		Date Considered	

*Examiner: Initial if reference considered, whether or not citation is in conformance with MPEP 609. Draw line through citation if not in conformance and not considered. Include copy of this form with next communication to applicant.

[1]Applicant's unique citation designation number (optional). [2]Applicant is to place a check mark here if English Translation is attached.

This collection of information is required by 37 CFR 1.98. The information is required to obtain or retain a benefit by the public which is to file (and by the USPTO to process) an application. Confidentiality is governed by 35 U.S.C. 122 and 37 CFR 1.14. This collection is estimated to take 2 hours to complete including gathering, preparing, and submitting the completed application form to the USPTO. Time will vary depending upon the individual case. Any comments on the amount of time you require to complete this form and/or suggestions for reducing this burden, should be sent to the Chief Information Officer, U.S. Patent and Trademark Office, P.O. Box 1450, Alexandria, VA 22313-1450. DO NOT SENT FEES OR COMPLETED FORMS TO THIS ADDRESS. **SEND TO: Commissioner for Patents, P.O. Box 1450, Alexandria, Virginia 22313-1450.**

If you need assistance in completing the form, call 1-800-PTO-9199 (1-800-786-9199) and select option 2.

PATENT COOPERATION TREATY

From the INTERNATIONAL SEARCHING AUTHORITY

To: LESTER VINCENT
BLAKELY, SOKOLOFF, TAYLOR & ZAFMAN LLP
1279 OAKMEAD PARKWAY
SUNNYVALE, CA 94085-4040

PCT

NOTIFICATION OF TRANSMITTAL OF THE INTERNATIONAL SEARCH REPORT AND THE WRITTEN OPINION OF THE INTERNATIONAL SEARCHING AUTHORITY, OR THE DECLARATION

(PCT Rule 44.1)

	Date of mailing *(day/month/year)* 22 OCT 2008
Applicant's or agent's file reference 7538P044PCT	**FOR FURTHER ACTION** See paragraphs 1 and 4 below
International application No. PCT/US2008/072537	International filing date *(day/month/year)* 07 August 2008
Applicant FULLPOWER TECHNOLOGIES, INC.	

1. ☒ The applicant is hereby notified that the international search report and the written opinion of the International Searching Authority have been established and are transmitted herewith.

   Filing of amendments and statement under Article 19:
   The applicant is entitled, if he so wishes, to amend the claims of the international application (see Rule 46):

   When? The time limit for filing such amendments is normally two months from the date of transmittal of the international search report.

   Where? Directly to the International Bureau of WIPO, 34 chemin des Colombettes 1211 Geneva 20, Switzerland, Facsimile No.: +41 22 740 14 35

   For more detailed instructions, see the notes on the accompanying sheet.

2. ☐ The applicant is hereby notified that no international search report will be established and that the declaration under Article 17(2)(a) to that effect and the written opinion of the International Searching Authority are transmitted herewith.

3. ☐ **With regard to the protest** against payment of (an) additional fee(s) under Rule 40.2, the applicant is notified that:

   ☐ the protest together with the decision thereon has been transmitted to the International Bureau together with the applicant's request to forward the texts of both the protest and the decision thereon to the designated Offices.

   ☐ no decision has been made yet on the protest; the applicant will be notified as soon as a decision is made.

4. **Reminders**

   Shortly after the expiration of **18 months** from the priority date, the international application will be published by the International Bureau. If the applicant wishes to avoid or postpone publication, a notice of withdrawal of the international application, or of the priority claim, must reach the International Bureau as provided in Rules 90*bis*.1 and 90*bis*.3, respectively, before the completion of the technical preparations for international publication.

   The applicant may submit comments on an informal basis on the written opinion of the International Searching Authority to the International Bureau. The International Bureau will send a copy of such comments to all designated Offices unless an international preliminary examination report has been or is to be established. These comments would also be made available to the public but not before the expiration of 30 months from the priority date.

   Within **19 months** from the priority date, but only in respect of some designated Offices, a demand for international preliminary examination must be filed if the applicant wishes to postpone the entry into the national phase **until 30 months** from the priority date (in some Offices even later); otherwise, the applicant must, **within 20 months** from the priority date, perform the prescribed acts for entry into the national phase before those designated Offices.

   In respect of other designated Offices, the time limit of **30 months** (or later) will apply even if no demand is filed within 19 months.

   See the Annex to Form PCT/IB/301 and, for details about the applicable time limits, Office by Office, see the *PCT Applicant's Guide*, Volume II, National Chapters and the WIPO Internet site.

Name and mailing address of the ISA/US Mail Stop PCT, Attn: ISA/US Commissioner for Patents P.O. Box 1450, Alexandria, Virginia 22313-1450 Facsimile No. 571-273-3201	Authorized officer: Blaine R. Copenheaver Telephone No. 571-272-7774

Form PCT/ISA/220 (January 2004) *(See notes on accompanying sheet)*

PATENT COOPERATION TREATY

PCT

INTERNATIONAL SEARCH REPORT

(PCT Article 18 and Rules 43 and 44)

Applicant's or agent's file reference 7538P044PCT	FOR FURTHER ACTION	see Form PCT/ISA/220 as well as, where applicable, item 5 below.
International application No. PCT/US2008/072537	International filing date *(day/month/year)* 07 August 2008	(Earliest) Priority Date *(day/month/year)* 06 August 2007
Applicant FULLPOWER TECHNOLOGIES, INC.		

This international search report has been prepared by this International Searching Authority and is transmitted to the applicant according to Article 18. A copy is being transmitted to the International Bureau.

This international search report consists of a total of 2 sheets.

☐ It is also accompanied by a copy of each prior art document cited in this report.

1. **Basis of the report**

   a. With regard to the **language**, the international search was carried out on the basis of:

   ☒ the international application in the language in which it was filed

   ☐ a translation of the international application into _____, which is the language of a translation furnished for the purposes of international search (Rules 12.3(a) and 23.1(b))

   b. ☐ With regard to any **nucleotide and/or amino acid sequence** disclosed in the international application, see Box No. I.

2. ☐ **Certain claims were found unsearchable** (see Box No. II)

3. ☐ **Unity of invention is lacking** (see Box No. III)

4. With regard to the **title**,

   ☒ the text is approved as submitted by the applicant

   ☐ the text has been established by this Authority to read as follows:

5. With regard to the **abstract**,

   ☒ the text is approved as submitted by the applicant

   ☐ the text has been established, according to Rule 38.2(b), by this Authority as it appears in Box No. IV. The applicant may, within one month from the date of mailing of this international search report, submit comments to this Authority

6. With regard to the **drawings**,

   a. the figure of the **drawings** to be published with the abstract is Figure No. 1

   ☐ as suggested by the applicant

   ☒ as selected by this Authority, because the applicant failed to suggest a figure

   ☐ as selected by this Authority, because this figure better characterizes the invention

   b. ☐ none of the figures is to be published with the abstract

Form PCT/ISA/210 (first sheet) (April 2005)

INTERNATIONAL SEARCH REPORT

International application No.
PCT/US2008/072537

A. CLASSIFICATION OF SUBJECT MATTER
IPC(8) - G01P 5/00 (2008.04)
USPC - 702/142
According to International Patent Classification (IPC) or to both national classification and IPC

B. FIELDS SEARCHED

Minimum documentation searched (classification system followed by classification symbols)
IPC(8) - G01P 5/00 (2008.04)
USPC - 702/141, 142

Documentation searched other than minimum documentation to the extent that such documents are included in the fields searched

Electronic data base consulted during the international search (name of data base and, where practicable, search terms used)
MicroPatent, Google Patent

C. DOCUMENTS CONSIDERED TO BE RELEVANT

Category*	Citation of document, with indication, where appropriate, of the relevant passages	Relevant to claim No.
X	US 6,522,266 B1 (SOEHREN et al) 18 February 2003 (18.02.2003) entire document	1-3, 6, 7, 13, 14, 20-22, 25, 26
---		---
Y		4, 5, 8-12, 15-19, 23-24, 27-31
Y	US 2005/0033200 A1 (SOEHREN et al) 10 February 2005 (10.02.2005) entire document	4-5, 15, 23, 24
Y	US 6,681,191 B2 (OAKLEY et al) 19 April 2005 (19.04.2005) entire document	8, 9, 16, 17, 27, 28
Y	US 2004/0225467 A1 (VOCK et al) 11 November 2004 (11.11.2004) entire document	10-12, 18, 19, 29-31

☐ Further documents are listed in the continuation of Box C. ☐

* Special categories of cited documents:
"A" document defining the general state of the art which is not considered to be of particular relevance
"E" earlier application or patent but published on or after the international filing date
"L" document which may throw doubts on priority claim(s) or which is cited to establish the publication date of another citation or other special reason (as specified)
"O" document referring to an oral disclosure, use, exhibition or other means
"P" document published prior to the international filing date but later than the priority date claimed
"T" later document published after the international filing date or priority date and not in conflict with the application but cited to understand the principle or theory underlying the invention
"X" document of particular relevance; the claimed invention cannot be considered novel or cannot be considered to involve an inventive step when the document is taken alone
"Y" document of particular relevance; the claimed invention cannot be considered to involve an inventive step when the document is combined with one or more other such documents, such combination being obvious to a person skilled in the art
"&" document member of the same patent family

Date of the actual completion of the international search	Date of mailing of the international search report
07 October 2008	22 OCT 2008
Name and mailing address of the ISA/US Mail Stop PCT, Attn: ISA/US, Commissioner for Patents P.O. Box 1450, Alexandria, Virginia 22313-1450 Facsimile No. 571-273-3201	Authorized officer: Blaine R. Copenheaver PCT Helpdesk: 571-272-4300 PCT OSP: 571-272-7774

Form PCT/ISA/210 (second sheet) (April 2005)

PATENT COOPERATION TREATY

From the
INTERNATIONAL SEARCHING AUTHORITY

To: LESTER VINCENT
BLAKELY, SOKOLOFF, TAYLOR & ZAFMAN LLP
1279 OAKMEAD PARKWAY
SUNNYVALE, CA 94085-4040

PCT

WRITTEN OPINION OF THE
INTERNATIONAL SEARCHING AUTHORITY

(PCT Rule 43*bis*.1)

Date of mailing *(day/month/year)*	22 OCT 2008
Applicant's or agent's file reference 7538P044PCT	FOR FURTHER ACTION See paragraph 2 below

International application No.	International filing date *(day/month/year)*	Priority date *(day/month/year)*
PCT/US2008/072537	07 August 2008	08 August 2007

International Patent Classification (IPC) or both national classification and IPC
IPC(8) - G01P 5/00 (2008.04)
USPC - 702/142

Applicant
FULLPOWER TECHNOLOGIES, INC.

1. This opinion contains indications relating to the following items:

- ☒ Box No. I Basis of the opinion
- ☐ Box No. II Priority
- ☐ Box No. III Non-establishment of opinion with regard to novelty, inventive step and industrial applicability
- ☐ Box No. IV Lack of unity of invention
- ☒ Box No. V Reasoned statement under Rule 43*bis*.1(a)(i) with regard to novelty, inventive step or industrial applicability; citations and explanations supporting such statement
- ☐ Box No. VI Certain documents cited
- ☐ Box No. VII Certain defects in the international application
- ☐ Box No. VIII Certain observations on the international application

2. **FURTHER ACTION**

If a demand for international preliminary examination is made, this opinion will be considered to be a written opinion of the International Preliminary Examining Authority ("IPEA") except that this does not apply where the applicant chooses an Authority other than this one to be the IPEA and the chosen IPEA has notified the International Bureau under Rule 66.1*bis*(b) that written opinions of this International Searching Authority will not be so considered.

If this opinion is, as provided above, considered to be a written opinion of the IPEA, the applicant is invited to submit to the IPEA a written reply together, where appropriate, with amendments, before the expiration of 3 months from the date of mailing of Form PCT/ISA/220 or before the expiration of 22 months from the priority date, whichever expires later.

For further options, see Form PCT/ISA/220.

3. For further details, see notes to Form PCT/ISA/220.

Name and mailing address of the ISA/US	Date of completion of this opinion	Authorized officer:
Mail Stop PCT, Attn: ISA/US Commissioner for Patents P.O. Box 1450, Alexandria, Virginia 22313-1450 Facsimile No. 571-273-3201	07 October 2008	Blaine Copenheaver PCT Helpdesk: 571-272-4300 PCT OSP: 571-272-7774

Form PCT/ISA/237 (cover sheet) (April 2007)

WRITTEN OPINION OF THE
INTERNATIONAL SEARCHING AUTHORITY

International application No.
PCT/US2008/072537

Box No. I Basis of this opinion

1. With regard to the **language**, this opinion has been established on the basis of:

   ☒ the international application in the language in which it was filed.

   ☐ a translation of the international application into _____ which is the language of a translation furnished for the purposes of international search (Rules 12.3(a) and 23.1(b)).

2. ☐ This opinion has been established taking into account the **rectification of an obvious mistake** authorized by or notified to this Authority under Rule 91 (Rule 43*bis*.1(a))

3. With regard to any **nucleotide and/or amino acid sequence** disclosed in the international application, this opinion has been established on the basis of:

   a. type of material

      ☐ a sequence listing

      ☐ table(s) related to the sequence listing

   b. format of material

      ☐ on paper

      ☐ in electronic form

   c. time of filing/furnishing

      ☐ contained in the international application as filed

      ☐ filed together with the international application in electronic form

      ☐ furnished subsequently to this Authority for the purposes of search

4. ☐ In addition, in the case that more than one version or copy of a sequence listing and/or table(s) relating thereto has been filed or furnished, the required statements that the information in the subsequent or additional copies is identical to that in the application as filed or does not go beyond the application as filed, as appropriate, were furnished.

5. Additional comments:

WRITTEN OPINION OF THE
INTERNATIONAL SEARCHING AUTHORITY

International application No.
PCT/US2008/072537

Box No. V **Reasoned statement under Rule 43*bis*.1(a)(i) with regard to novelty, inventive step or industrial applicability; citations and explanations supporting such statement**

1. Statement

Novelty (N)	Claims	4, 5, 8-12, 15-19, 23, 24, 27-31	YES
	Claims	1-3, 6, 7, 13, 14, 20-22, 25, 26	NO
Inventive step (IS)	Claims	None	YES
	Claims	1-31	NO
Industrial applicability (IA)	Claims	1-31	YES
	Claims	None	NO

2. Citations and explanations:

Claims 1-3, 6, 7, 13, 14, 20-22, 25, and 26 lack novelty under PCT Article 33(2) as being anticipated by Soehren et al. (US 6,522,266 B1), hereinafter referred to as Soehren '266.

Regarding Claim 1, Soehren '266 discloses a method of monitoring human activity (navigation system for a human, abstract), comprising:
monitoring accelerations (100, fig. 1) using an inertial sensor (414, fig. 4) disposed at one of a plurality of locations on a human body, wherein at least one of the plurality of locations is not a foot location (backpack, wrist or arm location, col. 14, lines 23-30);
counting a plurality of steps based on the accelerations (counting steps, col. 6, line 35);
determining a gait characteristic of the plurality of steps (frequency of step, col. 6, lines 32-36);
using the gait characteristic to determine a stride length (step length determined, col. 6, lines 16-28); and
determining at least one of a distance traveled and a speed of travel based on the stride length (distance traveled determined, col. 6, lines 36-39).

Regarding Claim 13, Soehren '266 discloses a mobile apparatus (navigation system for a human, abstract), comprising:
an inertial sensor (414, fig. 4) to monitor accelerations (100, fig. 1) from one of a plurality of locations on a body, wherein at least one of the plurality of locations is not a foot location (backpack, wrist or arm location, col. 14, lines 23-30);
a step counting logic coupled with the inertial sensor to count a plurality of steps based on the accelerations (counting steps, col. 6, line 35);
a gait logic coupled with the step counting logic to determine a gait characteristic of the plurality of steps (modeling step distance, col. 6, lines 16-28); and
a distance logic coupled with the gait logic to determine a stride length of the plurality of steps based on the gait characteristic (step length versus walking speed algorithm, col. 6, lines 20-28; also col. 14, lines 42-57; the distance is determined, col. 6, lines 32-36);
and to apply the stride length to the plurality of steps to determine at least one of a distance traveled and a speed of travel (motion classifier combines the step length and frequency to determine the distance traveled, col. 6, lines 36-39).

Regarding claim 20, Soehren '266 discloses a machine-accessible storage medium including instructions that, when executed by a machine, cause the machine to perform a method (computer or processor 404, fig. 4; col. 6, lines 8-53), comprising:
monitoring accelerations (100, fig. 1) using an inertial sensor (414, fig. 4) disposed at one of a plurality of locations on a human body, wherein at least one of the plurality of locations is not a foot location (backpack, wrist or arm location, col. 14, lines 23-30);
counting a plurality of steps based on the accelerations (counting steps, col. 6, line 35);
determining a gait characteristic of the plurality of steps (frequency of step, col. 6, lines 32-36);
using the gait characteristic to determine a stride length (step length determined, col. 6, lines 16-28); and
determining at least one of a distance traveled and a speed of travel based on the stride length (distance traveled determined, col. 6, lines 36-39).

Regarding Claims 2 and 21, Soehren '266 discloses the gait characteristic comprises a step cadence (step per unit time, col. 6, lines 33-36).

Regarding Claims 3 and 22, Soehren '266 discloses that determining the stride length includes locating a stride length associated with the gait characteristic in a data structure (step length versus walking speed algorithm, col. 6, lines 20-28; also col. 14, lines 42-57; fig. 6 shows data structure).

Regarding Claims 6, 7, 14, 25, and 26, Soehren '266 discloses receiving distance information, wherein the distance information is based on at least one of global positioning system (GPS) data, network triangulation data, or user input (d-GPS 510, fig. 5, col. 8, lines 45-61) and automatically calibrating the stride length based on a difference between the received distance information and the determined distance traveled (col. 8, line 62 to col. 9, line24).

Supplemental Box

In case the space in any of the preceding boxes is not sufficient.
Continuation of:

Claims 4, 5, 15, 23, and 24 lack an inventive step under PCT Article 33(3) as being obvious over Soehren '266 in view of Soehren et al. (US 2005/0033200 A1), hereinafter referred to as Soehren '200.

Regarding Claims 4, 15, and 23, Soehren '266 discloses that the data structure includes a plurality of entries, each of the plurality of entries associating a distinct stride length with one or more distinct gait characteristics (col. 6, lines 20-28; also col. 14, lines 42-57; fig. 6), but lacks the teaching of determining one or more user attributes; and modifying the data structure based on the one or more user attributes to calibrate the stride length by changing one or more of the plurality of entries.
Soehren '200 teaches a method of monitoring human activity (classifying and measuring human motion, abstract), comprising:
monitoring accelerations using an inertial sensor (IMU 24, fig. 2, para. 0033) in order to provide a distance estimate (28, para. 0041) and further teaches determining one or more user attributes (52, information on the state of the person monitored, para. 0041); and modifying the data structure based on the one or more user attributes 52 to 50 to Kalman filter 41) to calibrate the stride length by changing one or more of the plurality of entries (Kalman filter feeds back to motion classification unit 28, where the stride length is initially calculated, para. 0012, 0041).
It would have been obvious to one of ordinary skill in the art at the time of the invention to provide the user attributes of Soehren '200 to the data structure and analysis of Soehren '266 in order to monitor persons with health problems so that help can be sent should they become incapacitated (Soehren '200, para. 0004).

Regarding Claims 5 and 24, Soehren '266 lacks the teaching of receiving a user input of one or more user attributes; and generating the data structure using the one or more user attributes.
Soehren '200 teaches a method of monitoring human activity (classifying and measuring human motion, abstract), comprising:
monitoring accelerations using an inertial sensor (IMU 24, fig. 2, para. 0033) in order to provide a distance estimate (28, para. 0041) and further teaches receiving a user input of one or more user attributes (52, information on the state of the person monitored, para. 0041); and generating the data structure using the one or more user attributes (52 to 50 to Kalman filter 41).
It would have been obvious to one of ordinary skill in the art at the time of the invention to provide the user attributes of Soehren '200 to the data structure and analysis of Soehren '266 in order to monitor persons with health problems so that help can be sent should they become incapacitated (Soehren '200, para. 0004).

Claims 8, 9, 16, 17, 27, and 28 lack an inventive step under PCT Article 33(3) as being obvious over Soehren '266 in view of Oakley et al., hereinafter referred to as Oakley.

Regarding claims 8, 16, and 27, Soehren '266 teaches the use of a stride length to determine a distance travelled as previously described with respect to claim 1, but lacks the teaching of receiving a heart rate from a heart rate sensor; and determining information about the distance traveled based on the heart rate.
Oakley teaches a movement sensor system (abstract) in which heart rate is monitored by a heart rate sensor (col. 1, lines 8-10) and is used to determine information about the stride length based on the heart rate (heart-rate measurement used to determine user's stride length or number of strides, col. 3, lines 19-24).
It would have been obvious to one of ordinary skill in the art at the time of the invention to use the heart rate information as taught by Oakley to determine the distance travelled of Soehren '266 in order to aid in determining the energy expenditure of the user over distance in order to define a weight loss regimen (Oakley, col. 1, lines 48-55).

Regarding claims 9 and 17, Soehren '266 discloses that determining information comprises determining an incline (col. 3, lines 8-14), and adjusting a stride length to gait characteristic based on the incline (230, fig. 2).

Regarding claim 28, Soehren '266 discloses that determining information comprises determining an incline (col. 3, lines 8-14), and adjusting a stride length to cadence correlation based on the incline (230, fig. 2).

Claims 10-12, 18, 19, and 29-31 lack an inventive step under PCT Article 33(3) as being obvious over Soehren '266 in view of Vock et al., hereinafter referred to as Vock.

Regarding claims 10, 18, and 29, Soehren '266 lacks the teaching of using a competition logic to compare the distance traveled and the speed of travel to stored race data to generate a comparison result; and presenting a real time performance indication that includes the comparison result.
Vock teaches the use of inertial sensors in a distance (para. 0074) and speed (para. 0050) measuring system and further teaches the use of a competition logic (controller subsystem 12, fig. 1A) to compare the distance traveled and the speed of travel to stored race data to generate a comparison result (claim 1; para. 0081); and
presenting a real time performance indication that includes the comparison result (para. 0191).
It would have been obvious to one of ordinary skill in the art at the time of the invention to use the comparison data of Vock in the method of Soehren in order to provide a quantification of a user's activity in relation to others (Vock, para. 0022) so as to guide him in improving his skills.

Regarding claims 11 and 30, Soehren '266 lack the teaching of receiving stored race data from one of a server and a mobile device.
Vock teaches receiving stored race data from one of a server and a mobile device (82, fig. 1B).
It would have been obvious to one of ordinary skill in the art at the time of the invention to use the server of Vock to download the race data in order to allow the user to compare his statistics to a plurality of statistics from other users (Vock, para. 0022).

Supplemental Box

In case the space in any of the preceding boxes is not sufficient.
Continuation of:

Regarding claims 12 and 31, modified Soehren '266 discloses comparing data as shown above, and Soehren '266 further teaches normalizing at least one of the distance traveled, the speed of travel, the stored distance traveled, and the stored speed of travel (accelerometer signals are divided into 2.56 second signal segments, further processing determines the human motion, col. 15, lines 25-32; the human motion is used to determine the distance travelled, col. 15, lines 2-4).

Regarding claim 19, Soehren '266 lacks the teaching of a competition logic to enable users to set up time shifted races.
Vock teaches a competition logic which can enable users to set up time shifted races (comparing scores with other players across the world, para. 0404).
It would have been obvious to one of ordinary skill in the art at the time of the invention use the competition logic of Vock in the apparatus of Soehren '266 in order to allow players to improve their abilities by comparison with their own previous score or with other players (Vock, para. 0404).

Claims 1-31 meet the criteria set out in PCT Article 33(4), and thus have industrial applicability because the subject matter claimed can be made or used in industry.

NOTES TO FORM PCT/ISA/220

These Notes are intended to give the basic instructions concerning the filing of amendments under Article 19. The Notes are based on the requirements of the Patent Cooperation Treaty, the Regulations and the Administrative Instructions under that Treaty. In case of discrepancy between these Notes and those requirements, the latter are applicable. For more detailed information, see also the *PCT Applicant's Guide*, a publication of WIPO.

In these Notes, "Article," "Rule" and "Section" refer to the provisions of the PCT, the PCT Regulations and the PCT Administrative Instructions, respectively.

INSTRUCTIONS CONCERNING AMENDMENTS UNDER ARTICLE 19

The applicant has, after having received the international search report and the written opinion of the International Searching Authority, one opportunity to amend the claims of the international application. It should however be emphasized that, since all parts of the international application (claims, description and drawings) may be amended during the international preliminary examination procedure, there is usually no need to file amendments of the claims under Article 19 except where, e.g. the applicant wants the latter to be published for the purposes of provisional protection or has another reason for amending the claims before international publication. Furthermore, it should be emphasized that provisional protection is available in some States only (see *PCT Applicant's Guide*, Volume I/A, Annexes B1 and B2).

The attention of the applicant is drawn to the fact that amendments to the claims under Article 19 are not allowed where the International Searching Authority has declared, under Article 17(2), that no international search report would be established (see *PCT Applicant's Guide*, Volume I/A, paragraph 296).

What parts of the international application may be amended ?

Under Article 19, only the claims may be amended.

During the international phase, the claims may also be amended (or further amended) under Article 34 before the International Preliminary Examining Authority. The description and drawings may only be amended under Article 34 before the International Preliminary Examining Authority.

Upon entry into the national phase, all parts of the international application may be amended under Article 28 or, where applicable, Article 41.

When ? Within 2 months from the date of transmittal of the international search report or 16 months from the priority date, whichever time limit expires later. It should be noted, however, that the amendments will be considered as having been received on time if they are received by the International Bureau after the expiration of the applicable time limit but before the completion of the technical preparations for international publication (Rule 46.1).

Where not to file the amendments ?

The amendments may only be filed with the International Bureau and not with the receiving Office or the International Searching Authority (Rule 46.2).

Where a demand for international preliminary examination has been/is filed, see below.

How ? Either by cancelling one or more entire claims, by adding one or more new claims or by amending the text of one or more of the claims as filed.

A replacement sheet must be submitted for each sheet of the claims which, on account of an amendment or amendments, differs from the sheet originally filed.

All the claims appearing on a replacement sheet must be numbered in Arabic numerals. Where a claim is cancelled, no renumbering of the other claims is required. In all cases where claims are renumbered, they must be renumbered consecutively (Section 205(b)).

The amendments must be made in the language in which the international application is to be published.

What documents must/may accompany the amendments ?

Letter (Section 205(b)):

The amendments must be submitted with a letter.

The letter will not be published with the international application and the amended claims. It should not be confused with the "Statement under Article 19(1)" (see below, under "Statement under Article 19(1)").

The letter must be in English or French, at the choice of the applicant. However, if the language of the international application is English, the letter must be in English; if the language of the international application is French, the letter must be in French.

NOTES TO FORM PCT/ISA/220 (continued)

The letter must indicate the differences between the claims as filed and the claims as amended. It must, in particular, indicate, in connection with each claim appearing in the international application (it being understood that identical indications concerning several claims may be grouped), whether

(i) the claim is unchanged;

(ii) the claim is cancelled;

(iii) the claim is new;

(iv) the claim replaces one or more claims as filed;

(v) the claim is the result of the division of a claim as filed.

The following examples illustrate the manner in which amendments must be explained in the accompanying letter:

1. [Where originally there were 48 claims and after amendment of some claims there are 51]:
"Claims 1 to 29, 31, 32, 34, 35, 37 to 48 replaced by amended claims bearing the same numbers, claims 30, 33 and 36 unchanged; new claims 49 to 51 added."

2. [Where originally there were 15 claims and after amendment of all claims there are 11]:
"Claims 1 to 15 replaced by amended claims 1 to 11."

3. [Where originally there were 14 claims and the amendments consist in cancelling some claims and in adding new claims]:
"Claims 1 to 6 and 14 unchanged; claims 7 to 13 cancelled; new claims 15, 16 and 17 added." or
"Claims 7 to 13 cancelled; new claims 15, 16 and 17 added; all other claims unchanged."

4. [Where various kinds of amendments are made]:
"Claims 1-10 unchanged; claims 11 to 13, 18 and 19 cancelled; claims 14, 15 and 16 replaced by amended claim 14; claim 17 subdivided into amended claims 15, 16 and 17; new claims 20 and 21 added."

"Statement under Article 19(1)" (Rule 46.4)

The amendments may be accompanied by a statement explaining the amendments and indicating any impact that such amendments might have on the description and the drawings (which cannot be amended under Article 19(1)).

The statement will be published with the international application and the amended claims.

It must be in the language in which the international application is to be published.

It must be brief, not exceeding 500 words if in English or if translated into English.

It should not be confused with and does not replace the letter indicating the differences between the claims as filed and as amended. It must be filed on a separate sheet and must be identified as such by a heading, preferably by using the words "Statement under Article 19(1)."

It may not contain any disparaging comments on the international search report or the relevance of citations contained in that report. Reference to citations, relevant to a given claim, contained in the international search report may be made only in connection with an amendment of that claim.

Consequence if a demand for international preliminary examination has already been filed

If, at the time of filing any amendments and any accompanying statement, under Article 19, a demand for international preliminary examination has already been submitted, the applicant must preferably, at the time of filing the amendments (and any statement) with the International Bureau, also file with the International Preliminary Examining Authority a copy of such amendments (and of any statement) and, where required, a translation of such amendments for the procedure before that Authority (see Rules 55.3(a) and 62.2, first sentence). For further information, see the Notes to the demand form (PCT/IPEA/401).

If a demand for international preliminary examination is made, the written opinion of the International Searching Authority will, except in certain cases where the International Preliminary Examining Authority did not act as International Searching Authority and where it has notified the International Bureau under Rule 66.1*bis*(b), be considered to be a written opinion of the International Preliminary Examining Authority. If a demand is made, the applicant may submit to the International Preliminary Examining Authority a reply to the written opinion together, where appropriate, with amendments before the expiration of 3 months from the date of mailing of Form PCT/ISA/220 or before the expiration of 22 months from the priority date, whichever expires later (Rule 43*bis*.1(c)).

Consequence with regard to translation of the international application for entry into the national phase

The applicant's attention is drawn to the fact that, upon entry into the national phase, a translation of the claims as amended under Article 19 may have to be furnished to the designated/elected Offices, instead of, or in addition to, the translation of the claims as filed.

For further details on the requirements of each designated/elected Office, see the *PCT Applicant's Guide*, Volume II.

PATENT COOPERATION TREATY

From the INTERNATIONAL SEARCHING AUTHORITY

To:
LESTER J. VINCENT
BLAKELY, SOKOLOFF, TAYLOR & ZAFMAN LLP
1279 OAKMEAD PARKWAY
SUNNYVALE, CA 94085-4040

PCT

NOTIFICATION OF TRANSMITTAL OF THE INTERNATIONAL SEARCH REPORT AND THE WRITTEN OPINION OF THE INTERNATIONAL SEARCHING AUTHORITY, OR THE DECLARATION

(PCT Rule 44.1)

	Date of mailing *(day month year)* 07 AUG 2009
Applicant's or agent's file reference 8689P060PCT	**FOR FURTHER ACTION** See paragraphs 1 and 4 below
International application No. PCT/US 09/48523	International filing date *(day month year)* 24 June 2009 (24.06.2009)
Applicant DP TECHNOLOGIES, INC.	

1. ☒ The applicant is hereby notified that the international search report and the written opinion of the International Searching Authority have been established and are transmitted herewith.

   Filing of amendments and statement under Article 19:
   The applicant is entitled, if he so wishes, to amend the claims of the international application (see Rule 46):

   When? The time limit for filing such amendments is normally two months from the date of transmittal of the international search report.

   Where? Directly to the International Bureau of WIPO, 34 chemin des Colombettes 1211 Geneva 20, Switzerland, Facsimile No.: +41 22 338 8270

   For more detailed instructions, see the notes on the accompanying sheet.

2. ☐ The applicant is hereby notified that no international search report will be established and that the declaration under Article 17(2)(a) to that effect and the written opinion of the International Searching Authority are transmitted herewith.

3. ☐ **With regard to the protest** against payment of (an) additional fee(s) under Rule 40.2, the applicant is notified that:

   ☐ the protest together with the decision thereon has been transmitted to the International Bureau together with the applicant's request to forward the texts of both the protest and the decision thereon to the designated Offices.

   ☐ no decision has been made yet on the protest; the applicant will be notified as soon as a decision is made.

4. **Reminders**

   Shortly after the expiration of **18 months** from the priority date, the international application will be published by the International Bureau. If the applicant wishes to avoid or postpone publication, a notice of withdrawal of the international application, or of the priority claim, must reach the International Bureau as provided in Rules 90*bis*.1 and 90*bis*.3, respectively, before the completion of the technical preparations for international publication.

   The applicant may submit comments on an informal basis on the written opinion of the International Searching Authority to the International Bureau. The International Bureau will send a copy of such comments to all designated Offices unless an international preliminary examination report has been or is to be established. These comments would also be made available to the public but not before the expiration of 30 months from the priority date.

   Within **19 months** from the priority date, but only in respect of some designated Offices, a demand for international preliminary examination must be filed if the applicant wishes to postpone the entry into the national phase **until 30 months** from the priority date (in some Offices even later); otherwise, the applicant must, **within 20 months** from the priority date, perform the prescribed acts for entry into the national phase before those designated Offices.

   In respect of other designated Offices, the time limit of **30 months** (or later) will apply even if no demand is filed within 19 months.

   See the Annex to Form PCT/IB/301 and, for details about the applicable time limits, Office by Office, see the *PCT Applicant's Guide*, Volume II, National Chapters and the WIPO Internet site.

Name and mailing address of the ISA/US Mail Stop PCT, Attn: ISA/US Commissioner for Patents P.O. Box 1450, Alexandria, Virginia 22313-1450 Facsimile No. 571-273-3201	Authorized officer: Lee W. Young PCT Helpdesk: 571-272-4300 PCT OSP: 571-272-7774

Form PCT/ISA/220 (January 2004) *(See notes on accompanying sheet)*

PATENT COOPERATION TREATY

PCT

INTERNATIONAL SEARCH REPORT

(PCT Article 18 and Rules 43 and 44)

Applicant's or agent's file reference 8689P060PCT	FOR FURTHER ACTION	see Form PCT/ISA/220 as well as, where applicable, item 5 below.
International application No. PCT/US 09/48523	International filing date *(day/month/year)* 24 June 2009 (24.06.2009)	(Earliest) Priority Date *(day/month/year)* 24 June 2008 (24.06.2008)
Applicant DP TECHNOLOGIES, INC.		

This international search report has been prepared by this International Searching Authority and is transmitted to the applicant according to Article 18. A copy is being transmitted to the International Bureau.

This international search report consists of a total of 2 sheets.

☐ It is also accompanied by a copy of each prior art document cited in this report.

1. **Basis of the report**

a. With regard to the **language**, the international search was carried out on the basis of:

☒ the international application in the language in which it was filed.

☐ a translation of the international application into _____ which is the language of a translation furnished for the purposes of international search (Rules 12.3(a) and 23.1(b)).

b. ☐ This international search report has been established taking into account the **rectification of an obvious mistake** authorized by or notified to this Authority under Rule 91 (Rule 43.6*bis*(a)).

c. ☐ With regard to any **nucleotide and/or amino acid sequence** disclosed in the international application, see Box No. I.

2. ☐ **Certain claims were found unsearchable** (see Box No. II).

3. ☐ **Unity of invention is lacking** (see Box No. III).

4. With regard to the **title**,

☒ the text is approved as submitted by the applicant.

☐ the text has been established by this Authority to read as follows:

5. With regard to the **abstract**,

☒ the text is approved as submitted by the applicant.

☐ the text has been established, according to Rule 38.2(b), by this Authority as it appears in Box No. IV. The applicant may, within one month from the date of mailing of this international search report, submit comments to this Authority.

6. With regard to the **drawings**,

a. the figure of the **drawings** to be published with the abstract is Figure No. 1

☐ as suggested by the applicant.

☒ as selected by this Authority, because the applicant failed to suggest a figure.

☐ as selected by this Authority, because this figure better characterizes the invention.

b. ☐ none of the figures is to be published with the abstract.

Form PCT/ISA/210 (first sheet) (April 2007)

INTERNATIONAL SEARCH REPORT

International application No.
PCT/US 09/48523

A. CLASSIFICATION OF SUBJECT MATTER
IPC(8) - G01C 22/00 (2009.01)
USPC - 702/160
According to International Patent Classification (IPC) or to both national classification and IPC

B. FIELDS SEARCHED

Minimum documentation searched (classification system followed by classification symbols)
USPC - 702/160

Documentation searched other than minimum documentation to the extent that such documents are included in the fields searched
USPC - 702/141; 702/155 -- text search, see search terms below

Electronic data base consulted during the international search (name of data base and, where practicable, search terms used)
PubWEST (PGPB,USPT,EPAB,JPAB); Google; Search Terms Used:
motion, acceleration, inertial, sensor, notification, application, program, confidence, probability, rating, setting, walking, running, cadence, revolution, axis, monitor, state, biking, plurality, potential, count

C. DOCUMENTS CONSIDERED TO BE RELEVANT

Category*	Citation of document, with indication, where appropriate, of the relevant passages	Relevant to claim No.
X ----- Y	US 2005/0222801 A1 (Wulff et al.), 06 October 2005 (06.10.2005), especially Fig 3 and para [0022]-[0027], [0040], [0043]-[0045]	1, 2, 6-8, 12-14, 19 ---------- 3-5, 9-11, 15-18
Y	US 2006/0223547 A1 (Chin et al.), 05 October 2006 (05.10.2006), especially para [0065]	3, 4, 9, 10, 15, 16
Y	US 7,200,517 B2 (Darley et al.), 03 April 2007 (03.04.2007), especially Fig 7 and col 72, ln 45-50	5, 11, 17, 18

☐ Further documents are listed in the continuation of Box C. ☐

* Special categories of cited documents:
"A" document defining the general state of the art which is not considered to be of particular relevance
"E" earlier application or patent but published on or after the international filing date
"L" document which may throw doubts on priority claim(s) or which is cited to establish the publication date of another citation or other special reason (as specified)
"O" document referring to an oral disclosure, use, exhibition or other means
"P" document published prior to the international filing date but later than the priority date claimed
"T" later document published after the international filing date or priority date and not in conflict with the application but cited to understand the principle or theory underlying the invention
"X" document of particular relevance; the claimed invention cannot be considered novel or cannot be considered to involve an inventive step when the document is taken alone
"Y" document of particular relevance; the claimed invention cannot be considered to involve an inventive step when the document is combined with one or more other such documents, such combination being obvious to a person skilled in the art
"&" document member of the same patent family

Date of the actual completion of the international search	Date of mailing of the international search report
29 July 2009 (29.07.2009)	07 AUG 2009
Name and mailing address of the ISA/US Mail Stop PCT, Attn: ISA/US, Commissioner for Patents P.O. Box 1450, Alexandria, Virginia 22313-1450 Facsimile No. 571-273-3201	Authorized officer: Lee W. Young PCT Helpdesk: 571-272-4300 PCT OSP: 571-272-7774

Form PCT/ISA/210 (second sheet) (April 2007)

PATENT COOPERATION TREATY

From the
INTERNATIONAL SEARCHING AUTHORITY

To:
LESTER J. VINCENT
BLAKELY, SOKOLOFF, TAYLOR & ZAFMAN LLP
1279 OAKMEAD PARKWAY
SUNNYVALE, CA 94085-4040

PCT

WRITTEN OPINION OF THE INTERNATIONAL SEARCHING AUTHORITY

(PCT Rule 43*bis*.1)

Date of mailing *(day/month/year)*	07 AUG 2009
Applicant's or agent's file reference 8689P060PCT	FOR FURTHER ACTION See paragraph 2 below

International application No.	International filing date *(day month year)*	Priority date *(day month year)*
PCT/US 09/48523	24 June 2009 (24.06.2009)	24 June 2008 (24.06.2008)

International Patent Classification (IPC) or both national classification and IPC
IPC(8) - G01C 22/00 (2009.01)
USPC - 702/160

Applicant DP TECHNOLOGIES, INC.

1. This opinion contains indications relating to the following items:

- ☒ Box No. I Basis of the opinion
- ☐ Box No. II Priority
- ☐ Box No. III Non-establishment of opinion with regard to novelty, inventive step and industrial applicability
- ☐ Box No. IV Lack of unity of invention
- ☒ Box No. V Reasoned statement under Rule 43*bis*.1(a)(i) with regard to novelty, inventive step or industrial applicability; citations and explanations supporting such statement
- ☐ Box No. VI Certain documents cited
- ☐ Box No. VII Certain defects in the international application
- ☐ Box No. VIII Certain observations on the international application

2. **FURTHER ACTION**

If a demand for international preliminary examination is made, this opinion will be considered to be a written opinion of the International Preliminary Examining Authority ("IPEA") except that this does not apply where the applicant chooses an Authority other than this one to be the IPEA and the chosen IPEA has notified the International Bureau under Rule 66.1*bis*(b) that written opinions of this International Searching Authority will not be so considered.

If this opinion is, as provided above, considered to be a written opinion of the IPEA, the applicant is invited to submit to the IPEA a written reply together, where appropriate, with amendments, before the expiration of 3 months from the date of mailing of Form PCT/ISA/220 or before the expiration of 22 months from the priority date, whichever expires later.

For further options, see Form PCT/ISA/220.

3. For further details, see notes to Form PCT/ISA/220.

Name and mailing address of the ISA/US	Date of completion of this opinion	Authorized officer:
Mail Stop PCT, Attn: ISA/US Commissioner for Patents P.O. Box 1450, Alexandria, Virginia 22313-1450 Facsimile No. 571-273-3201	29 July 2009 (29.07.2009)	Lee W. Young PCT Helpdesk: 571-272-4300 PCT OSP: 571-272-7774

Form PCT/ISA/237 (cover sheet) (April 2007)

WRITTEN OPINION OF THE
INTERNATIONAL SEARCHING AUTHORITY

International application No.
PCT/US 09/48523

Box No. I Basis of this opinion

1. With regard to the **language**, this opinion has been established on the basis of:

   ☒ the international application in the language in which it was filed.

   ☐ a translation of the international application into _____ which is the language of a translation furnished for the purposes of international search (Rules 12.3(a) and 23.1(b)).

2. ☐ This opinion has been established taking into account the **rectification of an obvious mistake** authorized by or notified to this Authority under Rule 91 (Rule 43*bis*.1(a))

3. With regard to any **nucleotide and/or amino acid sequence** disclosed in the international application, this opinion has been established on the basis of:

   a. type of material

      ☐ a sequence listing

      ☐ table(s) related to the sequence listing

   b. format of material

      ☐ on paper

      ☐ in electronic form

   c. time of filing/furnishing

      ☐ contained in the international application as filed

      ☐ filed together with the international application in electronic form

      ☐ furnished subsequently to this Authority for the purposes of search

4. ☐ In addition, in the case that more than one version or copy of a sequence listing and/or table(s) relating thereto has been filed or furnished, the required statements that the information in the subsequent or additional copies is identical to that in the application as filed or does not go beyond the application as filed, as appropriate, were furnished.

5. Additional comments:

Form PCT/ISA/237 (Box No. I) (April 2007)

WRITTEN OPINION OF THE INTERNATIONAL SEARCHING AUTHORITY

International application No.
PCT/US 09/48523

Box No. V **Reasoned statement under Rule 43*bis*.1(a)(i) with regard to novelty, inventive step or industrial applicability; citations and explanations supporting such statement**

1. Statement

Novelty (N)	Claims	3-5, 9-11, 15-18	YES
	Claims	1, 2, 6-8, 12-14, 19	NO
Inventive step (IS)	Claims	none	YES
	Claims	1-19	NO
Industrial applicability (IA)	Claims	1-19	YES
	Claims	none	NO

2. Citations and explanations:

Claims 1, 2, 6-8, 12-14, and 19 lack novelty under PCT Article 33(2) as being anticipated by US 2005/0222801 A1 to Wulff et al. (hereinafter 'Wulff').

Regarding claim 1, Wulff discloses a a method of monitoring a motion state, comprising: monitoring accelerations by an electronic device using an inertial sensor (see Fig 3 and para [0023]); identifying, by the electronic device, a current motion state based on the accelerations (see para [0024]); determining an application that subscribes to a motion state identification service (see para [0027] -- 'determines the corresponding procedure of the plurality of predetermined procedures'); and notifying the application of the current motion state (see para [0043]-[0045]).

Regarding claim 2, Wulff discloses the method of claim 1. Wulff further discloses determining whether the current motion state is different from a previous motion state (see para [0024]); and modifying one or more settings of the application if the current motion state is different from the previous motion state (see para [0040]).

Regarding claim 6, Wulff discloses the method of claim 1. Wulff further discloses identifying notification criteria associated with the application (see para [0026] -- 'threshold value'); and notifying the application of the current motion state when the identified notification criteria are satisfied (see para [0026]).

Regarding claim 7, Wulff discloses a computer readable storage medium including instructions that, when executed by a processor, cause the processor to perform a method comprising: monitoring accelerations by an electronic device using an inertial sensor (see Fig 3 and para [0023]); identifying, by the electronic device, a current motion state based on the accelerations (see para [0024]); determining an application that subscribes to a motion state identification service (see para [0027] -- 'determines the corresponding procedure of the plurality of predetermined procedures'); and notifying the application of the current motion state (see para [0043]-[0045]).

Regarding claim 8, Wulff discloses the computer readable storage medium of claim 7. Wulff further discloses determining whether the current motion state is different from a previous motion state (see para [0024]); and modifying one or more settings of the application if the current motion state is different from the previous motion state (see para [0040]).

Regarding claim 12, Wulff discloses the computer readable storage medium of claim 7. Wulff further discloses identifying notification criteria associated with the application (see para [0026] -- 'threshold value'); and notifying the application of the current motion state when the identified notification criteria are satisfied (see para [0026]).

Regarding claim 13, Wulff discloses an electronic device, comprising: an application that runs on the electronic device (see para [0043]-[0045]); an inertial sensor to monitor accelerations experienced by the electronic device (see Fig 3 and para [0023]); and a motion state identification system to identify a current motion state based on the accelerations, to determine that the application subscribes to a motion state identification service, and to notify the application of the current motion state (see para [0024], [0027], [0043]-[0045]).

Regarding claim 14, Wulff discloses the electronic device of claim 13. Wulff further discloses the motion state identification system to determine whether the current motion state is different from a previous motion state (see para [0024]), and to cause the electronic device to modify one or more settings of the application if the current motion state is different from the previous motion state (see para [0040]).

Regarding claim 19, Wulff discloses the electronic device of claim 13. Wulff further discloses the motion state identification system to identify notification criteria associated with the application (see para [0026] -- 'threshold value'), and to notify the application of the current motion state when the identified notification criteria are satisfied (see para [0026]).

-- Continued --

Supplemental Box

In case the space in any of the preceding boxes is not sufficient.
Continuation of:
Box No. V-2. Citations and explanations:

Claims 3, 4, 9, 10, 15, and 16 lack an inventive step under PCT Article 33(3) as being obvious over Wulff in view of US 2006/0223547 A1 to Chin et al. (hereinafter 'Chin').

Regarding claim 3, Wulff discloses the method of claim 1. Wulff further discloses wherein the current motion state is one of a plurality of potential motion states (see para [0022] -- 'prerecorded motions'). Wulff does not disclose determining a confidence rating for the current motion state that indicates a probability that the current motion state corresponds to an actual motion state of a present user of the electronic device. However, Chin discloses determining a confidence rating for the current motion state that indicates a probability that the current motion state corresponds to an actual motion state of a present user of the electronic device (see para [0065] -- 'statistical calculator to determine the likelihood of environmental condition'). It would have been obvious to one skilled in the art to combine the method of Wulff with the confidence rating of Chin, because Wulff and Chin are directed to system and method for devices with motion sensors (see abstracts). Furthermore, users benefit from methods that include confidence rating, because such methods facilitate detection of 'directional orientation and a motion' (see Wulff para [0005]).

Regarding claim 4, Wulff discloses the method of claim 1. Wulff further discloses identifying a plurality of potential current motion states (see para [0022] -- 'prerecorded motions'). Wulff does not disclose identifying confidence ratings for each of the identified potential current motion states. However, Chin discloses identifying confidence ratings for each of the identified potential current motion states (see para [0065] -- 'statistical calculator to determine the likelihood of environmental condition'). It would have been obvious to one skilled in the art to combine the method of Wulff with the confidence rating of Chin, because Wulff and Chin are directed to system and method for devices with motion sensors (see abstracts). Furthermore, users benefit from methods that include confidence rating, because such methods facilitate detection of device's 'directional orientation and a motion' (see Wulff para [0005]).

Regarding claim 9, Wulff discloses the computer readable storage medium of claim 7. Wulff further discloses wherein the current motion state is one of a plurality of potential motion states (see para [0022] -- 'prerecorded motions'). Wulff does not disclose determining a confidence rating for the current motion state that indicates a probability that the current motion state corresponds to an actual motion state of a present user of the electronic device. However, Chin discloses determining a confidence rating for the current motion state that indicates a probability that the current motion state corresponds to an actual motion state of a present user of the electronic device (see para [0065] -- 'statistical calculator to determine the likelihood of environmental condition'). It would have been obvious to one skilled in the art to combine the method of Wulff with the confidence rating of Chin, because Wulff and Chin are directed to system and method for devices with motion sensors (see abstracts). Furthermore, users benefit from methods that include confidence rating, because such methods facilitate detection of 'directional orientation and a motion' (see Wulff para [0005]).

Regarding claim 10, Wulff discloses the computer readable storage medium of claim 7. Wulff further discloses identifying a plurality of potential current motion states (see para [0022] -- 'prerecorded motions'). Wulff does not disclose identifying confidence ratings for each of the identified potential current motion states. However, Chin discloses identifying confidence ratings for each of the identified potential current motion states (see para [0065] -- 'statistical calculator to determine the likelihood of environmental condition'). It would have been obvious to one skilled in the art to combine the method of Wulff with the confidence rating of Chin, because Wulff and Chin are directed to system and method for devices with motion sensors (see abstracts). Furthermore, users benefit from methods that include confidence rating, because such methods facilitate detection of 'directional orientation and a motion' (see Wulff para [0005]).

Regarding claim 15, Wulff discloses the electronic device of claim 13. Wulff further discloses wherein the current motion state is one of a plurality of potential motion states (see para [0022] -- 'prerecorded motions'). Wulff does not disclose the motion state identification system to determine a confidence rating for the current motion state that indicates a probability that the current motion state corresponds to an actual motion state of a present user of the electronic device. However, Chin discloses the motion state identification system to determine a confidence rating for the current motion state that indicates a probability that the current motion state corresponds to an actual motion state of a present user of the electronic device (see para [0065] -- 'statistical calculator to determine the likelihood of environmental condition'). It would have been obvious to one skilled in the art to combine the method of Wulff with the confidence rating of Chin, because Wulff and Chin are directed to system and method for devices with motion sensors (see abstracts). Furthermore, users benefit from methods that include confidence rating, because such methods facilitate detection of 'directional orientation and a motion' (see Wulff para [0005]).

Regarding claim 16, Wulff discloses the electronic device of claim 13. Wulff further discloses the motion state identification system to identify a plurality of potential current motion states (see para [0022] -- 'prerecorded motions'). Wulff does not disclose identify confidence ratings for each of the identified potential current motion states. However, Chin discloses identify confidence ratings for each of the identified potential current motion states (see para [0065] -- 'statistical calculator to determine the likelihood of environmental condition'). It would have been obvious to one skilled in the art to combine the method of Wulff with the confidence rating of Chin, because Wulff and Chin are directed to system and method for devices with motion sensors (see abstracts). Furthermore, users benefit from methods that include confidence rating, because such methods facilitate detection of 'directional orientation and a motion' (see Wulff para [0005]).

-- Continued --

Supplemental Box

In case **the space in any of the preceding boxes is not sufficient.**

Continuation of:
Box No. V-2. Citations and explanations:

Claims 5, 11, 17, and 18 lack an inventive step under PCT Article 33(3) as being obvious over Wulff in view of US 7,200,517 B2 to Darley et al. (hereinafter 'Darley').

Regarding claim 5, Wulff discloses the method of claim 1. Wulff further discloses identifying specific additional motion information the application is configured to receive (see para [0042]-[0045] -- different applications using different motion); and sending the specific additional motion information to the application (see para [0042]-[0045] -- 'additional trigger'). Wulff does not disclose determining additional motion information from the acceleration measurements, the additional motion information including at least one of a user's current cadence, the user's current rolling averages of accelerations, a current dominant axis, and counted periodic human motion counts. However, Darley discloses determining additional motion information from the acceleration measurements, the additional motion information including at least one of a user's current cadence, the user's current rolling averages of accelerations, a current dominant axis, and counted periodic human motion counts (see Fig 7 and col 72, ln 45-50). It would have been obvious to one skilled in the art to combine the method of Wulff with the additional motion information of Darley, because Wulff and Darley are directed to system and method for devices with motion sensors (see abstracts). Furthermore, users benefit from methods that include additional motion information, because such methods facilitate detection of device's 'directional orientation and a motion' (see Wulff para [0005]).

Regarding claim 11, Wulff discloses the computer readable storage medium of claim 7. Wulff further discloses identifying specific additional motion information the application is configured to receive (see para [0042]-[0045] -- different applications using different motion); and sending the specific additional motion information to the application (see para [0042]-[0045] -- 'additional trigger'). Wulff does not disclose determining additional motion information from the acceleration measurements, the additional motion information including at least one of a user's current cadence, the user's current rolling averages of accelerations, a current dominant axis, and counted periodic human motion counts. However, Darley discloses determining additional motion information from the acceleration measurements, the additional motion information including at least one of a user's current cadence, the user's current rolling averages of accelerations, a current dominant axis, and counted periodic human motion counts (see Fig 7 and col 72, ln 45-50). It would have been obvious to one skilled in the art to combine the method of Wulff with the additional motion information of Darley, because Wulff and Darley are directed to system and method for devices with motion sensors (see abstracts). Furthermore, users benefit from methods that include additional motion information, because such methods facilitate detection of device's 'directional orientation and a motion' (see Wulff para [0005]).

Regarding claim 17, Wulff discloses the electronic device of claim 13. Wulff does not disclose the motion state identification system to determine additional motion information from the acceleration measurements, the additional motion information including at least one of a user's current cadence, the user's current rolling averages of accelerations, a current dominant axis, and counted periodic human motion counts. However, Darley discloses the motion state identification system to determine additional motion information from the acceleration measurements, the additional motion information including at least one of a user's current cadence, the user's current rolling averages of accelerations, a current dominant axis, and counted periodic human motion counts (see Fig 7 and col 72, ln 45-50). It would have been obvious to one skilled in the art to combine the method of Wulff with the additional motion information of Darley, because Wulff and Darley are directed to system and method for devices with motion sensors (see abstracts). Furthermore, users benefit from methods that include additional motion information, because such methods facilitate detection of device's 'directional orientation and a motion' (see Wulff para [0005]).

Regarding claim 18, Wulff and Darley discloses the electronic device of claim 17. Wulff further discloses the motion state identification system to identify specific additional motion information the application is configured to receive (see para [0042]-[0045] -- different applications using different motion), and to send the specific additional motion information to the application (see para [0042]-[0045] -- 'additional trigger').

Claims 1-19 have industrial applicability as defined by PCT Article 33(4), because the subject matter can be made or used in industry.

Electronic Acknowledgement Receipt	
EFS ID:	10100892
Application Number:	13018321
International Application Number:	
Confirmation Number:	8340
Title of Invention:	Human Activity Monitoring Device
First Named Inventor/Applicant Name:	Philippe Kahn
Customer Number:	08791
Filer:	Judith A. Szepesi
Filer Authorized By:	
Attorney Docket Number:	8689P027C2
Receipt Date:	16-MAY-2011
Filing Date:	31-JAN-2011
Time Stamp:	20:16:43
Application Type:	Utility under 35 USC 111(a)

Payment information:

Submitted with Payment	no

File Listing:

Document Number	Document Description	File Name	File Size(Bytes)/ Message Digest	Multi Part /.zip	Pages (if appl.)
1		8689P027C2_IDS_and_SB08.pdf	74570 3353108b422ba77e8857bba5562cda18e2859660	yes	5

	Multipart Description/PDF files in .zip description				
	Document Description		**Start**	**End**	
	Transmittal Letter		1	2	
	Information Disclosure Statement (IDS) Filed (SB/08)		3	5	
Warnings:					
Information:					
2	NPL Documents	8689P027C2_NPL1_Bourzac.pdf	128059 07decc31172e3acca4bcb5541443e986a24a2506	no	3
Warnings:					
Information:					
3	NPL Documents	8689P027C2_NPL2_Cheng.pdf	240827 51c63ee5ce827a49a285d8a473bb21cd9224395b	no	5
Warnings:					
Information:					
4	NPL Documents	8689P027C2_NPL3_Dao.pdf	205332 f5d4a74878de12741227bad4f59a587920086e54	no	3
Warnings:					
Information:					
5	NPL Documents	8689P027C2_NPL4_HeartRate.pdf	53819 ba39594fa9efd97e4fddf37554ba8f2b6f8c0d74	no	1
Warnings:					
Information:					
6	NPL Documents	8689P027C2_NPL5_Jones.pdf	39418 58ebbb04a2891927c294cfc016521d09fb3ca2d0	no	1
Warnings:					
Information:					
7	NPL Documents	8689P027C2_NPL6_Lee.pdf	367118 8fef86b2ac5938a77274299e883796359d6166d9	no	4
Warnings:					
Information:					
8	NPL Documents	8689P027C2_NPL7_Margaria.pdf	1545714 8d694def8a25ed43260581a6d9599d440a5b07c1	no	22
Warnings:					
Information:					

9	NPL Documents	8689P027C2_NPL8_Mizell.pdf	146134 02af0f475eabd33fe266629ec81b79b36b0c7cce	no	2
Warnings:					
Information:					
10	NPL Documents	8689P027C2_NPL9_Ormoneit.pdf	361162 4a2c455c4ec09a37ca1d3a96f70994e89d9d6424	no	7
Warnings:					
Information:					
11	NPL Documents	8689P027C2_NPL10_ISRWO537.PDF	670030 9fd3302ae1ba91be918948fa6039a16303c553f0	no	10
Warnings:					
Information:					
12	NPL Documents	8689P027C2_NPL11_ISRWO523.PDF	939647 c732d793db5e8ca788cba3dbf0361f4446668631	no	8
Warnings:					
Information:					
13	NPL Documents	8689P027C2_NPL12_SensorFusion.pdf	344366 84ee406bac09920f777cfe20213660f60195c880	no	2
Warnings:					
Information:					
14	NPL Documents	8689P027C2_NPL13_Sinha.pdf	583857 9fd3850f9cc4110010885d04ad0631d46d13121c	no	5
Warnings:					
Information:					
15	NPL Documents	8689P027C2_NPL14_WangPart1.pdf	15683310 ba667db276d331a4d41fb116da13c6c0acc5cf21	no	66
Warnings:					
Information:					
16	NPL Documents	8689P027C2_NPL15_WangPart2.pdf	12311010 54cec9d6922da032bd1aa0e3acad242e5d1fda64	no	26
Warnings:					
Information:					
17	NPL Documents	8689P027C2_NPL16_WangPart3.pdf	12310547 742bb3a81bfb042ad9a6f303274ce46d89047e22	no	31
Warnings:					
Information:					

18	NPL Documents	8689P027C2_NPL17_Weckesser.pdf	1389496 7932ca2f7ada5c193850b76af6be5b4961347646	no	6
Warnings:					
Information:					
19	NPL Documents	8689P027C2_NPL18_Weinberg.pdf	255646 41480b8002e54df508f9fa4ae29ef12140566d42	no	3
Warnings:					
Information:					
20	NPL Documents	8689P027C2_NPL19_Yoo.pdf	865362 a536d12e280b6a329f12283a3ad883ab53cd94f4	no	9
Warnings:					
Information:					
		Total Files Size (in bytes):	48515424		

This Acknowledgement Receipt evidences receipt on the noted date by the USPTO of the indicated documents, characterized by the applicant, and including page counts, where applicable. It serves as evidence of receipt similar to a Post Card, as described in MPEP 503.

New Applications Under 35 U.S.C. 111

If a new application is being filed and the application includes the necessary components for a filing date (see 37 CFR 1.53(b)-(d) and MPEP 506), a Filing Receipt (37 CFR 1.54) will be issued in due course and the date shown on this Acknowledgement Receipt will establish the filing date of the application.

National Stage of an International Application under 35 U.S.C. 371

If a timely submission to enter the national stage of an international application is compliant with the conditions of 35 U.S.C. 371 and other applicable requirements a Form PCT/DO/EO/903 indicating acceptance of the application as a national stage submission under 35 U.S.C. 371 will be issued in addition to the Filing Receipt, in due course.

New International Application Filed with the USPTO as a Receiving Office

If a new international application is being filed and the international application includes the necessary components for an international filing date (see PCT Article 11 and MPEP 1810), a Notification of the International Application Number and of the International Filing Date (Form PCT/RO/105) will be issued in due course, subject to prescriptions concerning national security, and the date shown on this Acknowledgement Receipt will establish the international filing date of the application.

IN THE UNITED STATES PATENT AND TRADEMARK OFFICE

Applicant	: Philippe Kahn, et al.	Examiner:	Not yet assigned
Appl. No.	: 13/018,321	Art Unit:	2857
Filed	: January 31, 2011	Conf No:	8340
For	: Human Activity Monitoring Device		
Customer No.	: 08791		

CERTIFICATE OF TRANSMISSION
I hereby certify that this correspondence is being submitted electronically via EFS Web on the date shown below.

/Judith Szepesi/ May 16, 2011
Judith A. Szepesi ***Date***

Mail Stop Amendment
Commissioner for Patents
P.O. Box 1450
Alexandria, Virginia 22313-1450

INFORMATION DISCLOSURE STATEMENT

Sir:

Enclosed is a copy of Information Disclosure Citation Form PTO-1449 or PTO/SB/08 together with copies of the documents cited on that form, except for copies not required to be submitted (e.g., copies of U.S. patents and U.S. published patent applications need not be enclosed). It is respectfully requested that the cited documents be considered and that the enclosed copy of Information Disclosure Citation Form PTO-1449 or PTO/SB/08 be initialed by the Examiner to indicate such consideration and a copy thereof returned to applicant(s).

Pursuant to 37 C.F.R. § 1.97, the submission of this Information Disclosure Statement is not to be construed as a representation that a search has been made and is not to be construed as an admission that the information cited in this statement is material to patentability.

Pursuant to 37 C.F.R. § 1.97, this Information Disclosure Statement is being submitted under one of the following (as indicated by an "X" to the left of the appropriate paragraph):

__X__ 37 C.F.R. §1.97(b).

_____ 37 C.F.R. §1.97(c). If so, then enclosed with this Information Disclosure Statement is one of the following:

____ A statement pursuant to 37 C.F.R. §1.97(e) or

____ The Director is Authorized to charge in the amount of $180.00 for the fee under 37 C.F.R. § 1.17(p).

_____ 37 C.F.R. §1.97(d). If so, then enclosed with this Information Disclosure Statement are the following:

(1) A statement pursuant to 37 C.F.R. §1.97(e); and

(2) A check for $180.00 for the fee under 37 C.F.R. §1.17(p) for submission of the Information Disclosure Statement.

If there are any additional charges, please charge Deposit Account No. 02-2666.

Respectfully submitted,

BLAKELY, SOKOLOFF, TAYLOR & ZAFMAN LLP

Dated: May 12, 2011

/Judith Szepesi/
Judith A. Szepesi
Reg. No. 39,393

1279 Oakmead Parkway
Sunnyvale, CA 94085
(408) 720-8300

PATENT APPLICATION FEE DETERMINATION RECORD

Substitute for Form PTO-875

Application or Docket Number: 13/018,321

APPLICATION AS FILED - PART I

FOR	(Column 1) NUMBER FILED	(Column 2) NUMBER EXTRA	SMALL ENTITY RATE($)	SMALL ENTITY FEE($)	OR	OTHER THAN SMALL ENTITY RATE($)	OTHER THAN SMALL ENTITY FEE($)
BASIC FEE (37 CFR 1.16(a), (b), or (c))	N/A	N/A	N/A			N/A	330
SEARCH FEE (37 CFR 1.16(k), (i), or (m))	N/A	N/A	N/A			N/A	540
EXAMINATION FEE (37 CFR 1.16(o), (p), or (q))	N/A	N/A	N/A			N/A	220
TOTAL CLAIMS (37 CFR 1.16(i))	20 minus 20 =	*			OR	x 52 =	0.00
INDEPENDENT CLAIMS (37 CFR 1.16(h))	4 minus 3 =	* 1				x 220 =	220
APPLICATION SIZE FEE (37 CFR 1.16(s))	If the specification and drawings exceed 100 sheets of paper, the application size fee due is $270 ($135 for small entity) for each additional 50 sheets or fraction thereof. See 35 U.S.C. 41(a)(1)(G) and 37 CFR 1.16(s).						0.00
MULTIPLE DEPENDENT CLAIM PRESENT (37 CFR 1.16(j))							0.00
* If the difference in column 1 is less than zero, enter "0" in column 2.			TOTAL			TOTAL	1310

APPLICATION AS AMENDED - PART II

		(Column 1) CLAIMS REMAINING AFTER AMENDMENT		(Column 2) HIGHEST NUMBER PREVIOUSLY PAID FOR	(Column 3) PRESENT EXTRA	SMALL ENTITY RATE($)	SMALL ENTITY ADDITIONAL FEE($)	OR	OTHER THAN SMALL ENTITY RATE($)	OTHER THAN SMALL ENTITY ADDITIONAL FEE($)
AMENDMENT A	Total (37 CFR 1.16(i))	*	Minus	**	=	x =		OR	x =	
	Independent (37 CFR 1.16(h))	*	Minus	***	=	x =		OR	x =	
	Application Size Fee (37 CFR 1.16(s))									
	FIRST PRESENTATION OF MULTIPLE DEPENDENT CLAIM (37 CFR 1.16(j))							OR		
						TOTAL ADD'L FEE		OR	TOTAL ADD'L FEE	

		(Column 1) CLAIMS REMAINING AFTER AMENDMENT		(Column 2) HIGHEST NUMBER PREVIOUSLY PAID FOR	(Column 3) PRESENT EXTRA	RATE($)	ADDITIONAL FEE($)	OR	RATE($)	ADDITIONAL FEE($)
AMENDMENT B	Total (37 CFR 1.16(i))	*	Minus	**	=	x =		OR	x =	
	Independent (37 CFR 1.16(h))	*	Minus	***	=	x =		OR	x =	
	Application Size Fee (37 CFR 1.16(s))									
	FIRST PRESENTATION OF MULTIPLE DEPENDENT CLAIM (37 CFR 1.16(j))							OR		
						TOTAL ADD'L FEE		OR	TOTAL ADD'L FEE	

* If the entry in column 1 is less than the entry in column 2, write "0" in column 3.

** If the "Highest Number Previously Paid For" IN THIS SPACE is less than 20, enter "20".

*** If the "Highest Number Previously Paid For" IN THIS SPACE is less than 3, enter "3".

The "Highest Number Previously Paid For" (Total or Independent) is the highest found in the appropriate box in column 1.

UNITED STATES PATENT AND TRADEMARK OFFICE

UNITED STATES DEPARTMENT OF COMMERCE
United States Patent and Trademark Office
Address: COMMISSIONER FOR PATENTS
P.O. Box 1450
Alexandria, Virginia 22313-1450
www.uspto.gov

APPLICATION NUMBER	FILING or 371(c) DATE	GRP ART UNIT	FIL FEE REC'D	ATTY.DOCKET.NO	TOT CLAIMS	IND CLAIMS
13/018,321	01/31/2011	2856	1310	8689P027C2	20	4

CONFIRMATION NO. 8340

8791
BLAKELY SOKOLOFF TAYLOR & ZAFMAN LLP
1279 OAKMEAD PARKWAY
SUNNYVALE, CA 94085-4040

FILING RECEIPT

Date Mailed: 03/07/2011

Receipt is acknowledged of this non-provisional patent application. The application will be taken up for examination in due course. Applicant will be notified as to the results of the examination. Any correspondence concerning the application must include the following identification information: the U.S. APPLICATION NUMBER, FILING DATE, NAME OF APPLICANT, and TITLE OF INVENTION. Fees transmitted by check or draft are subject to collection. Please verify the accuracy of the data presented on this receipt. **If an error is noted on this Filing Receipt, please submit a written request for a Filing Receipt Correction. Please provide a copy of this Filing Receipt with the changes noted thereon. If you received a "Notice to File Missing Parts" for this application, please submit any corrections to this Filing Receipt with your reply to the Notice. When the USPTO processes the reply to the Notice, the USPTO will generate another Filing Receipt incorporating the requested corrections**

Applicant(s)

Philippe Kahn, Aptos, CA;
Arthur Kinsolving, Santa Cruz, CA;
Mark Andrew Christensen, Santa Cruz, CA;
Brian Y. Lee, Aptos, CA;
David Vogel, Santa Cruz, CA;

Power of Attorney: The patent practitioners associated with Customer Number 08791

Domestic Priority data as claimed by applicant

This application is a CON of 12/694,135 01/26/2010 PAT 7,881,902
which is a CON of 11/644,455 12/22/2006 PAT 7,653,508

Foreign Applications (You may be eligible to benefit from the **Patent Prosecution Highway** program at the USPTO. Please see http://www.uspto.gov for more information.)

If Required, Foreign Filing License Granted: 03/02/2011

The country code and number of your priority application, to be used for filing abroad under the Paris Convention, is **US 13/018,321**

Projected Publication Date: Request for Non-Publication Acknowledged

Non-Publication Request: Yes

Early Publication Request: No

Title

Human Activity Monitoring Device

Preliminary Class

073

PROTECTING YOUR INVENTION OUTSIDE THE UNITED STATES

Since the rights granted by a U.S. patent extend only throughout the territory of the United States and have no effect in a foreign country, an inventor who wishes patent protection in another country must apply for a patent in a specific country or in regional patent offices. Applicants may wish to consider the filing of an international application under the Patent Cooperation Treaty (PCT). An international (PCT) application generally has the same effect as a regular national patent application in each PCT-member country. The PCT process **simplifies** the filing of patent applications on the same invention in member countries, but **does not result** in a grant of "an international patent" and does not eliminate the need of applicants to file additional documents and fees in countries where patent protection is desired.

Almost every country has its own patent law, and a person desiring a patent in a particular country must make an application for patent in that country in accordance with its particular laws. Since the laws of many countries differ in various respects from the patent law of the United States, applicants are advised to seek guidance from specific foreign countries to ensure that patent rights are not lost prematurely.

Applicants also are advised that in the case of inventions made in the United States, the Director of the USPTO must issue a license before applicants can apply for a patent in a foreign country. The filing of a U.S. patent application serves as a request for a foreign filing license. The application's filing receipt contains further information and guidance as to the status of applicant's license for foreign filing.

Applicants may wish to consult the USPTO booklet, "General Information Concerning Patents" (specifically, the section entitled "Treaties and Foreign Patents") for more information on timeframes and deadlines for filing foreign patent applications. The guide is available either by contacting the USPTO Contact Center at 800-786-9199, or it can be viewed on the USPTO website at http://www.uspto.gov/web/offices/pac/doc/general/index.html.

For information on preventing theft of your intellectual property (patents, trademarks and copyrights), you may wish to consult the U.S. Government website, http://www.stopfakes.gov. Part of a Department of Commerce initiative, this website includes self-help "toolkits" giving innovators guidance on how to protect intellectual property in specific countries such as China, Korea and Mexico. For questions regarding patent enforcement issues, applicants may call the U.S. Government hotline at 1-866-999-HALT (1-866-999-4158).

LICENSE FOR FOREIGN FILING UNDER

Title 35, United States Code, Section 184

Title 37, Code of Federal Regulations, 5.11 & 5.15

GRANTED

The applicant has been granted a license under 35 U.S.C. 184, if the phrase "IF REQUIRED, FOREIGN FILING LICENSE GRANTED" followed by a date appears on this form. Such licenses are issued in all applications where the conditions for issuance of a license have been met, regardless of whether or not a license may be required as

set forth in 37 CFR 5.15. The scope and limitations of this license are set forth in 37 CFR 5.15(a) unless an earlier license has been issued under 37 CFR 5.15(b). The license is subject to revocation upon written notification. The date indicated is the effective date of the license, unless an earlier license of similar scope has been granted under 37 CFR 5.13 or 5.14.

This license is to be retained by the licensee and may be used at any time on or after the effective date thereof unless it is revoked. This license is automatically transferred to any related applications(s) filed under 37 CFR 1.53(d). This license is not retroactive.

The grant of a license does not in any way lessen the responsibility of a licensee for the security of the subject matter as imposed by any Government contract or the provisions of existing laws relating to espionage and the national security or the export of technical data. Licensees should apprise themselves of current regulations especially with respect to certain countries, of other agencies, particularly the Office of Defense Trade Controls, Department of State (with respect to Arms, Munitions and Implements of War (22 CFR 121-128)); the Bureau of Industry and Security, Department of Commerce (15 CFR parts 730-774); the Office of Foreign AssetsControl, Department of Treasury (31 CFR Parts 500+) and the Department of Energy.

NOT GRANTED

No license under 35 U.S.C. 184 has been granted at this time, if the phrase "IF REQUIRED, FOREIGN FILING LICENSE GRANTED" DOES NOT appear on this form. Applicant may still petition for a license under 37 CFR 5.12, if a license is desired before the expiration of 6 months from the filing date of the application. If 6 months has lapsed from the filing date of this application and the licensee has not received any indication of a secrecy order under 35 U.S.C. 181, the licensee may foreign file the application pursuant to 37 CFR 5.15(b).

UTILITY PATENT APPLICATION TRANSMITTAL
(Only for new nonprovisional applications under 37 CFR 1.53(b))

Attorney Docket No. 8689P027C2
(maximum 12 characters)
First Named Inventor Philippe Kahn

Title: Human Activity Monitoring Device

ADDRESS TO: **Commissioner for Patents**
P.O. Box 1450
Alexandria, Virginia 22313-1450

APPLICATION ELEMENTS
See MPEP chapter 600 concerning utility patent application contents.

1. _____ **Fee Transmittal Form (e.g., PTO/SB/17)**
(Submit an original and a duplicate for fee processing)

2. _____ **Applicant Claims Small Entity Status. (37 CFR 1.27)**

3. __X__ **Specification (Total Pages 39)**
(preferred arrangement set forth below)
- Descriptive Title of the Invention
- Cross Reference to Related Applications
- Statement Regarding Fed sponsored R & D
- Reference sequence listing, a table, or a computer program listing appendix
- Background of the Invention
- Brief Summary of the Invention
- Brief Description of the Drawings (if filed)
- Detailed Description
- Claim(s)
- Abstract of the Disclosure

4. __X__ **Drawings(s) (35 USC 113) (Total Sheets 9)**

5. __X__ **Oath or Declaration (Total Pages 6)**

a. ____ Newly Executed (Original or Copy)

b. __X__ Copy from a Prior Application (37 CFR 1.63(d))
(for Continuation/Divisional with Box 18 completed)

i. ___ DELETIONS OF INVENTOR(S) Signed statement attached deleting inventor(s) named in the prior application, see 37 CFR 1.63(d)(2) and 1.33(b).

c. ____ Unsigned.

6. __X__ **Application Data Sheet. (37 CFR 1.76)**

7. _____ CD-ROM or CD-R in duplicate, large table or Computer Program (Appendix)

8. _____ Nucleotide and/or Amino Acid Sequence Submission
(if applicable, all necessary)

a. ____ Computer Readable Form (CRF)

b. ____ Specification Sequence Listing on:
i. _____CD-ROM or CD-R (2 copies); or
ii. _____ paper

c. ____ Statements verifying identity of above copies

ACCOMPANYING APPLICATION PARTS

9.	_____	**Assignment Papers (cover sheet & documents(s))**
10.	_____	a. Separate 37 CFR 3.73(b) Statement (where there is an assignee)
	__X__	b. Power of Attorney
11.	_____	English Translation Document (if applicable)
12.	__X__	a. Information Disclosure Statement (IDS)/PTO-1449 (or PTO/SB/08)
	__X__	b. Copies of IDS Citations
13.	_____	**Preliminary Amendment**
14.	_____	**Return Receipt Postcard (MPEP 503) (Should be specifically itemized)**
15.	_____	Certified Copy of Priority Document(s) (if foreign priority is claimed)
16.	__X__	**Nonpublication Request under 35 U.S.C. 122(b)(2)(B)(i). Applicant must attach form PTO/SB/35 or its equivalent.**
17A.	_____	Claim for Foreign Priority
17B.	_____	Other: _____

17C.	__X__	**Pursuant to 37 C.F.R. 1.136(a)(3), applicant(s) hereby request and authorize the U.S. Patent and Trademark Office to (1) treat any concurrent or future reply that requires a petition for extension of time as incorporating a petition for extension of time for the appropriate length of time and (2) charge all required fees, including extension of time fees and fees under 37 C.F.R. 1.16 and 1.17, to Deposit Account No. 02-2666.**

18. If a CONTINUING APPLICATION, check appropriate box, and supply the requisite information below and in the first sentence of the specification following the title (e.g., by way of preliminary amendment), or in an Application Data Sheet Under 37 C.F.R. 1.76:

__X__ **Continuation** ____ **Divisional** ____ **Continuation-in-part (CIP)**
Of Prior Application No.: 12/694,135 **Examiner** Cosimano, Edward R **Group Art Unit** 2863
(which is a __X__ continuation/ ___ divisional/ ___ CIP of prior application no. 11/644,455,
which is a ___ continuation/ ___ divisional/ ___ CIP of prior application no. _____) (List entire chain of priority)

Applicant(s): Also include a Preliminary Amendment to amend the specification to claim priority.
For CONTINUATION AND DIVISIONAL APPS only: The entire disclosure of the prior application, from which an oath or declaration is supplied under Box 5b, is considered a part of the disclosure of the accompanying continuation or divisional application and is hereby incorporated by reference. The incorporation can only be relied upon when a portion has been inadvertently omitted from the submitted application parts.

19. Correspondence Address

__X__ **Customer Number or Bar Code Label** 08791 **(Insert Customer No. or Attach Bar Code Label here)**

or

_____ **Correspondence Address Below**

NAME Judith A. Szepesi
REG. NO. 39,393
SIGNATURE /Judith Szepesi/
DATE January 31, 2011

BLAKELY, SOKOLOFF, TAYLOR & ZAFMAN LLP
ADDRESS 1279 Oakmead Parkway

CITY Sunnyvale **STATE** California **ZIP CODE** 94085
Country U.S.A. **TELEPHONE** (408) 720-8300 **FAX** (408) 720-8383

CERTIFICATE OF TRANSMISSION

I hereby certify that this correspondence is being submitted electronically via EFS Web on the date shown below.

Name (PRINT/TYPE): Judith A. Szepesi **Registration No.:** 39,393

Signature: /Judith Szepesi/ **Date:** January 31 2011

NONPUBLICATION REQUEST UNDER 35 U.S.C. 122(b)(2)(B)(i)

First Named Inventor Philippe Kahn
Title Human Activity Monitoring Device

Attorney Docket No. 8689P027C2

I hereby certify that the invention disclosed in the attached application **has not and will not be** the subject of an application filed in another country, or under a multilateral agreement, that requires publication at eighteen months after filing.

I hereby request that the attached application not be published under 35 U.S.C. 122(b).

January 31, 2011 Date	/Judith Szepesi/ Signature
(408) 720-8300 Telephone Number	Judith A. Szepesi Typed or Printed Name
	39,393 Registration No.

This request must be signed in compliance with 37 CFR 1.33(b) and submitted with the application **upon filing**.

Applicant may rescind this nonpublication request at any time. If applicant rescinds a request that an application not be published under 35 U.S.C. 122(b), the application will be scheduled for publication at eighteen months from the earliest claimed filing date for which a benefit is claimed.

If applicant subsequently files an application directed to the invention disclosed in the attached application in another country, or under a multilateral international agreement, that requires publication of applications eighteen months after filing, the applicant **must** notify the United States Patent and Trademark Office of such filing within forty-five (45) days after the date of the filing of such foreign or international application. **Failure to do so will result in abandonment of this application (35 U.S.C. 122(b)(2)(B)(iii)).**

Electronic Patent Application Fee Transmittal	
Application Number:	
Filing Date:	
Title of Invention:	Human Activity Monitoring Device
First Named Inventor/Applicant Name:	Philippe Kahn
Filer:	Judith A. Szepesi/Joan Abriam
Attorney Docket Number:	8689P027C2
Filed as Large Entity	

Utility under 35 USC 111(a) Filing Fees

Description	Fee Code	Quantity	Amount	Sub-Total in USD($)
Basic Filing:				
Utility application filing	1011	1	330	330
Utility Search Fee	1111	1	540	540
Utility Examination Fee	1311	1	220	220
Pages:				
Claims:				
Independent claims in excess of 3	1201	1	220	220
Miscellaneous-Filing:				
Petition:				

Description	Fee Code	Quantity	Amount	Sub-Total in USD($)
Patent-Appeals-and-Interference:				
Post-Allowance-and-Post-Issuance:				
Extension-of-Time:				
Miscellaneous:				
			Total in USD ($)	1310

Electronic Acknowledgement Receipt	
EFS ID:	9344318
Application Number:	13018321
International Application Number:	
Confirmation Number:	8340
Title of Invention:	Human Activity Monitoring Device
First Named Inventor/Applicant Name:	Philippe Kahn
Customer Number:	08791
Filer:	Judith A. Szepesi
Filer Authorized By:	
Attorney Docket Number:	8689P027C2
Receipt Date:	31-JAN-2011
Filing Date:	
Time Stamp:	20:48:10
Application Type:	Utility under 35 USC 111(a)

Payment information:

Submitted with Payment	yes
Payment Type	Deposit Account
Payment was successfully received in RAM	$1310
RAM confirmation Number	7507
Deposit Account	022666
Authorized User	

File Listing:

Document Number	Document Description	File Name	File Size(Bytes)/ Message Digest	Multi Part /.zip	Pages (if appl.)

1	Oath or Declaration filed	8689P027C2_Declaration_and_POA.PDF	284222 e46d4cda0b474cf3d25a994c422fa3a354d75e0a	no	6
Warnings:					
Information:					
2	Drawings-only black and white line drawings	8689P027C2_Figures_AsFiled.pdf	289464 5b85363b03214f9b26e704da5bea4149c20b74dc	no	9
Warnings:					
Information:					
3	NPL Documents	8689P027C2_NPL1_Bourzac.pdf	128059 2e68cfa7c1c1f3f9ad5d0b82bd7111b0ed88054f	no	3
Warnings:					
Information:					
4	NPL Documents	8689P027C2_NPL2_Dao.pdf	210159 2f447b17810d9f5d3c3d2362cc10c7e5cdb8873d	no	3
Warnings:					
Information:					
5	NPL Documents	8689P027C2_NPL3_Lee.pdf	342264 b6a77902f948a32f8215ca30ff81be5813d72c76	no	4
Warnings:					
Information:					
6	NPL Documents	8689P027C2_NPL4_Margaria.pdf	1545672 275c5f22fac812c52aba863f004ca49371185c73	no	22
Warnings:					
Information:					
7	NPL Documents	8689P027C2_NPL5_Mizell.pdf	161586 878e4406e3ea5218e6a1a57c065c80a8384cb93f	no	2
Warnings:					
Information:					
8	NPL Documents	8689P027C2_NPL6_Ormoneit.pdf	362088 f658ffc882f7d1b4f6193ca5e1022db2b358ad2b	no	7
Warnings:					
Information:					
9	NPL Documents	8689P027C2_NPL7_ISRWO72537.pdf	507567 17c1aadf7dc3ebbca9e61288a5ebdbd2ed33a6f5	no	10
Warnings:					
Information:					

10	NPL Documents	8689P027C2_NPL8_ISRWO48523.pdf	801218 5d53a2fd7431b7e01afb59ad590047248223648e	no	8
Warnings:					
Information:					
11	NPL Documents	8689P027C2_NPL9_Weinberg.pdf	342413 0dc0783de9431e2adf548cca9cd1c899b42b3e14	no	4
Warnings:					
Information:					
12		8689P027C2_App_AsFiled.pdf	137539 cc50e37dbfedd3135fdce324d8a949d18b1f2191	yes	39

Multipart Description/PDF files in .zip description		
Document Description	**Start**	**End**
Application Data Sheet	1	1
Specification	2	33
Claims	34	38
Abstract	39	39

Warnings:					
Information:					
13		8689P027C2_IDS_and_SB08.pdf	88442 5fa445f897cfc92e8b7366bbe0c22dd6523a2032	yes	6

Multipart Description/PDF files in .zip description		
Document Description	**Start**	**End**
Transmittal Letter	1	2
Information Disclosure Statement (IDS) Filed (SB/08)	3	6

Warnings:					
Information:					
14		8689P027C2_Transmittal.pdf	30324 5ace0f9801deeb98843422d5d06793bf39f56bee	yes	3

Multipart Description/PDF files in .zip description		
Document Description	**Start**	**End**

	Transmittal of New Application		1		2
	Nonpublication request from applicant.		3		3
Warnings:					
Information:					
15	Fee Worksheet (PTO-875)	fee-info.pdf	36293 68f645ca2b0c80fd87c24655c061bbbf6be5dd83	no	2
Warnings:					
Information:					
		Total Files Size (in bytes):	5267310		

This Acknowledgement Receipt evidences receipt on the noted date by the USPTO of the indicated documents, characterized by the applicant, and including page counts, where applicable. It serves as evidence of receipt similar to a Post Card, as described in MPEP 503.

New Applications Under 35 U.S.C. 111
If a new application is being filed and the application includes the necessary components for a filing date (see 37 CFR 1.53(b)-(d) and MPEP 506), a Filing Receipt (37 CFR 1.54) will be issued in due course and the date shown on this Acknowledgement Receipt will establish the filing date of the application.

National Stage of an International Application under 35 U.S.C. 371
If a timely submission to enter the national stage of an international application is compliant with the conditions of 35 U.S.C. 371 and other applicable requirements a Form PCT/DO/EO/903 indicating acceptance of the application as a national stage submission under 35 U.S.C. 371 will be issued in addition to the Filing Receipt, in due course.

New International Application Filed with the USPTO as a Receiving Office
If a new international application is being filed and the international application includes the necessary components for an international filing date (see PCT Article 11 and MPEP 1810), a Notification of the International Application Number and of the International Filing Date (Form PCT/RO/105) will be issued in due course, subject to prescriptions concerning national security, and the date shown on this Acknowledgement Receipt will establish the international filing date of the application.

Attorney Docket No.: 07538.P027 Patent

First Named Inventor: Philippe Kahn et al.

Check One:

____ Declaration Submitted with Initial Filing OR

__X__ Declaration Submitted After Initial Filing (Surcharge under 37 C.F.R. § 1.16(e) Required).

Complete If Known:

Application No.: _____

Filing Date: _____

Art Unit: _____

Examiner Name: _____

DECLARATION AND POWER OF ATTORNEY FOR UTILITY OR DESIGN PATENT APPLICATION

I hereby declare that:

Each inventor's residence, mailing address, and citizenship are as stated below next to their name.

I believe the inventor(s) named below to be the original and first inventor(s) of the subject matter which is claimed and for which a patent is sought on the invention entitled:

HUMAN ACTIVITY MONITORING DEVICE

(Title of the Invention)

the specification of which

____ is attached hereto **OR**

__X__ was filed on (12/26/2006)

as United States Application Number 11/644,455

or PCT International Application Number _____

and was amended on (MM/DD/YYYY) _____ (if applicable)

I hereby state that I have reviewed and understand the contents of the above-identified specification, including the claim(s), as amended by any amendment specifically referred to above.

I do not know and do not believe that the claimed invention was ever known or used in the United States of America before my invention thereof, or patented or described in any printed publication in any country before my invention thereof or more than one year prior to this application. I do not know and do not believe that the claimed invention was in public use or on sale in the United States of America more than one year prior to this application, nor do I know or believe that the invention has been patented or made the subject of an inventor's certificate issued before the date of this application in any country foreign to the United States of America on an application filed by me or my legal representatives or assigns more than twelve months (for a utility patent application) or six months (for a design patent application) prior to this application.

I acknowledge the duty to disclose information which is material to patentability as defined in 37 C.F.R. 1.56, including for continuation-in-part applications, material information which became available between the filing date of the prior application and the national or PCT international filing date of the

continuation-in-part application.

I hereby claim foreign priority benefits under 35 U.S.C. 119(a)-(d) or (f), or 365(b) of any foreign application(s) for patent, inventor's or plant breeder's rights certificate(s), or 365(a) of any PCT international application which designated at least one country other than the United States of America, listed below and have also identified below, by checking the box, any foreign application for patent, inventor's or plant breeder's rights certificate(s), or any PCT international application having a filing date before that of the application on which priority is claimed:

Prior Foreign Application(s)			Priority Claimed?		Certified Copy Attached?	
(Number)	(Country)	(Foreign Filing Date - MM/DD/YYYY)	Yes	No	Yes	No
(Number)	(Country)	(Foreign Filing Date - MM/DD/YYYY)	Yes	No	Yes	No
(Number)	(Country)	(Foreign Filing Date - MM/DD/YYYY)	Yes	No	Yes	No

Appointment of Patent Practitioners:

I hereby appoint the patent practitioners associated with the **Customer Number 08791** as my respective patent attorneys and patent agents, with full power of substitution and revocation, to prosecute this application and to transact all business in the U.S. Patent and Trademark Office connected herewith.

If this patent application is assigned, then the undersigned hereby authorizes the patent attorneys and patent agents named herein to accept and follow instructions from the assignee(s) as to any action to be taken in the United States Patent and Trademark Office regarding this application without direct communication between the patent attorneys and patent agents and the undersigned. In the event of a change in the persons from whom instructions may be taken, at least one patent attorney or patent agent named herein will be so notified by the undersigned.

Direct all correspondence to (check one):

_X_ Customer Number 08791 OR

___ Correspondence Address Below:

Benjamin A. Kimes
(Name of Attorney or Agent)
BLAKELY, SOKOLOFF, TAYLOR & ZAFMAN LLP
12400 Wilshire Boulevard
Seventh Floor
Los Angeles, California 90025 U.S.A.
Telephone: (408) 720-8300
Fax: (408) 720-8383

I hereby declare that all statements made herein of my own knowledge are true and that all statements made on information and belief are believed to be true; and further that these statements were made with the knowledge that willful false statements and the like so made are punishable by fine or imprisonment, or both, under 18 U.S.C. 1001 and that such willful false statements may jeopardize the validity of the application or any patent issued thereon.

NAME OF SOLE OR FIRST INVENTOR: ☐ A petition has been filed for this unsigned inventor

Full Name: Philippe Kahn
(Given Name (First and Middle [if any]), Family Name (or Surname), and Suffix [if any])

Inventor's Signature _____ Date 3-29-07

Residence Aptos, CA, USA *(City, State, Country)* Citizenship USA *(Country)*

Mailing Address 777 Hudson Lane
Aptos, CA 95003

NAME OF SECOND INVENTOR: ☐ A petition has been filed for this unsigned inventor

Full Name: Arthur Kinsolving
(Given Name (First and Middle [if any]), Family Name (or Surname), and Suffix [if any])

Inventor's Signature _____ Date _____

Residence Santa Cruz, CA, USA *(City, State, Country)* Citizenship USA *(Country)*

Mailing Address 122 Fairview Place
Santa Cruz, CA 95062

NAME OF THIRD INVENTOR: ☐ A petition has been filed for this unsigned inventor

Full Name: Mark Andrew Christensen
(Given Name (First and Middle [if any]), Family Name (or Surname), and Suffix [if any])

Inventor's Signature _____ Date _____

Residence Santa Cruz, CA, USA *(City, State, Country)* Citizenship New Zealand *(Country)*

Mailing Address 215 Anchorage Ave

I hereby declare that all statements made herein of my own knowledge are true and that all statements made on information and belief are believed to be true; and further that these statements were made with the knowledge that willful false statements and the like so made are punishable by fine or imprisonment, or both, under 18 U.S.C. 1001 and that such willful false statements may jeopardize the validity of the application or any patent issued thereon.

NAME OF SOLE OR FIRST INVENTOR: ☐ A petition has been filed for this unsigned inventor

Full Name: Philippe Kahn
(Given Name (First and Middle [if any]), Family Name (or Surname), and Suffix [if any])

Inventor's Signature _____ Date _____

Residence Aptos, CA, USA *(City, State, Country)* Citizenship USA *(Country)*

Mailing Address 777 Hudson Lane
Aptos, CA 95003

NAME OF SECOND INVENTOR: ☐ A petition has been filed for this unsigned inventor

Full Name: Arthur Kinsolving
(Given Name (First and Middle [if any]), Family Name (or Surname), and Suffix [if any])

Inventor's Signature _____ Date 3/21/07

Residence Santa Cruz, CA, USA *(City, State, Country)* Citizenship USA *(Country)*

Mailing Address 122 Fairview Place
Santa Cruz, CA 95062

NAME OF THIRD INVENTOR: ☐ A petition has been filed for this unsigned inventor

Full Name: Mark Andrew Christensen
(Given Name (First and Middle [if any]), Family Name (or Surname), and Suffix [if any])

Inventor's Signature _____ Date 3/20/07

Residence Santa Cruz, CA, USA *(City, State, Country)* Citizenship New Zealand *(Country)*

Mailing Address 215 Anchorage Ave

Santa Cruz, CA 95062

NAME OF FOURTH INVENTOR: ☐ A petition has been filed for this unsigned inventor

Full Name: Brian Y. Lee
(Given Name (First and Middle [if any]), Family Name (or Surname), and Suffix [if any])

Inventor's Signature _____ Date 3/26/2007

Residence Aptos, CA, USA *(City, State, Country)* Citizenship USA *(Country)*

Mailing Address 777 Hudson Lane
Aptos, CA 95003

NAME OF FIFTH INVENTOR: ☐ A petition has been filed for this unsigned inventor

Full Name: David Vogel
(Given Name (First and Middle [if any]), Family Name (or Surname), and Suffix [if any])

Inventor's Signature _____ Date 3/20/07

Residence Santa Cruz, CA, USA *(City, State, Country)* Citizenship USA *(Country)*

Mailing Address 600 Beel Drive
Santa Cruz, CA 95060

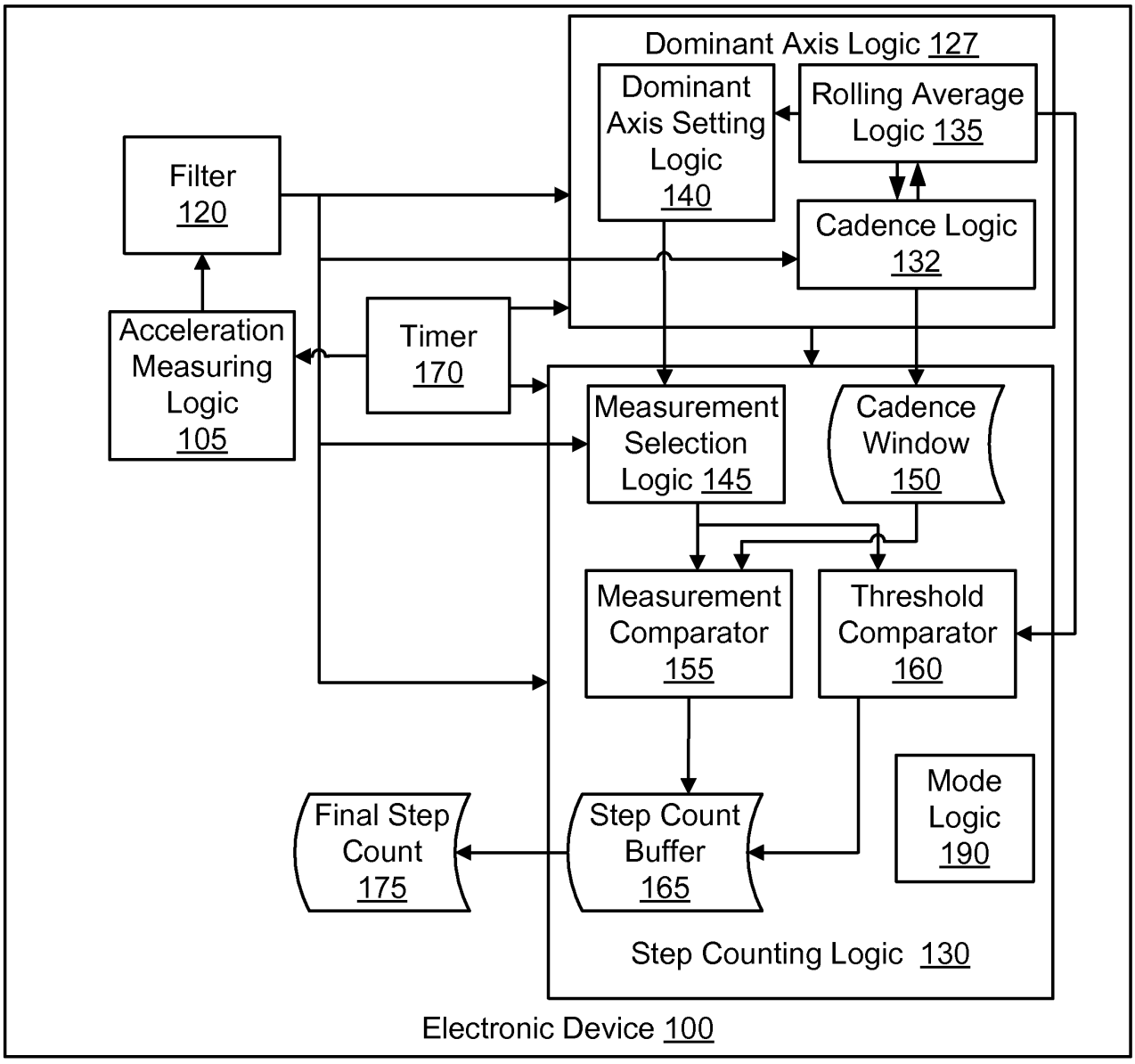
Dominant Axis Logic 127
Dominant Axis Setting Logic 140
Rolling Average Logic 135
Filter 120
Cadence Logic 132
Acceleration Measuring Logic 105
Timer 170
Measurement Selection Logic 145
Cadence Window 150
Measurement Comparator 155
Threshold Comparator 160
Mode Logic 190
Final Step Count 175
Step Count Buffer 165
Step Counting Logic 130
Electronic Device 100

Figure 1

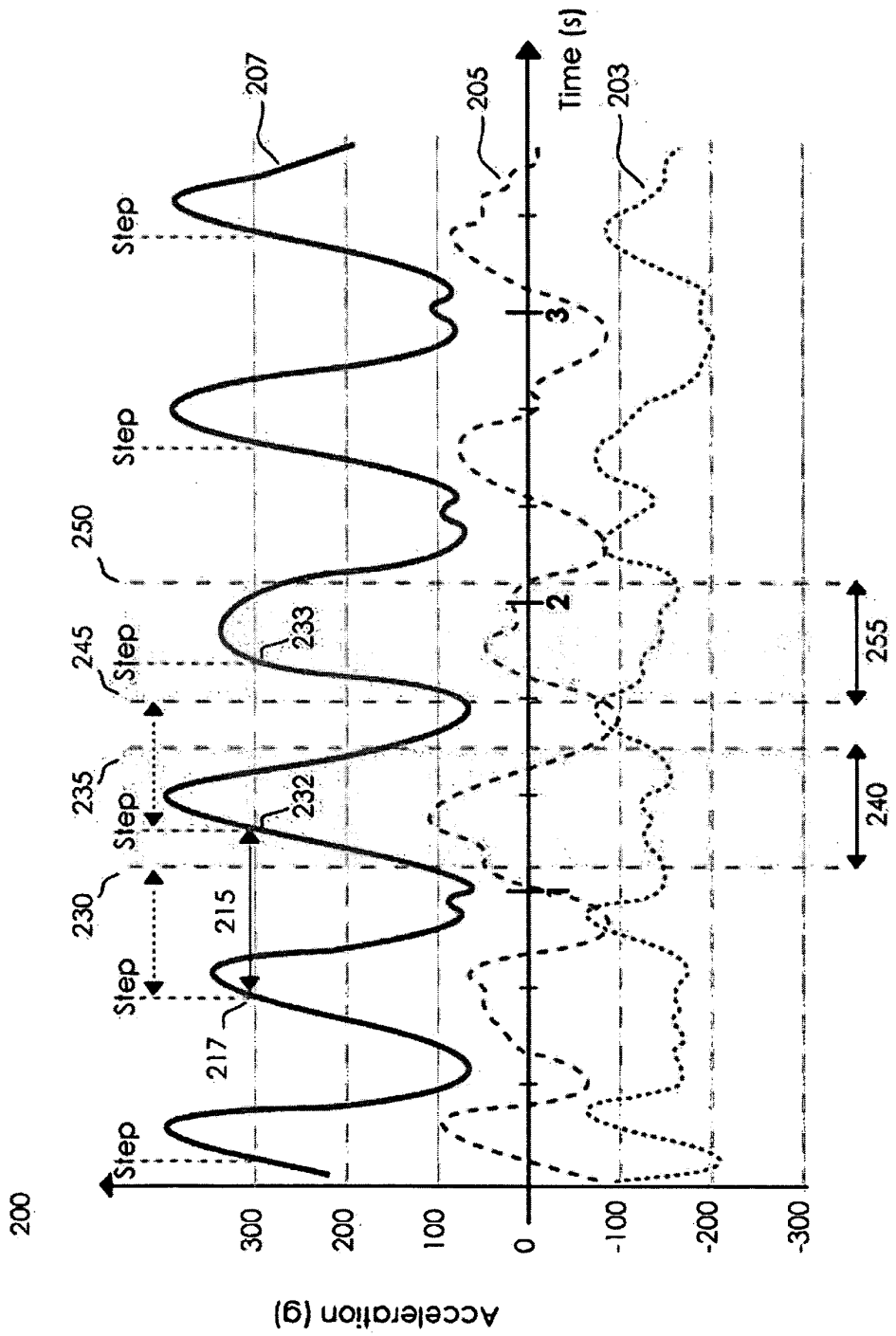
200
300
200
100
0
-100
-200
-300
Acceleration (g)
Time (s)
1
2
3
Step
207
205
203
250
245
233
235
232
230
215
217
240
255

Figure 2

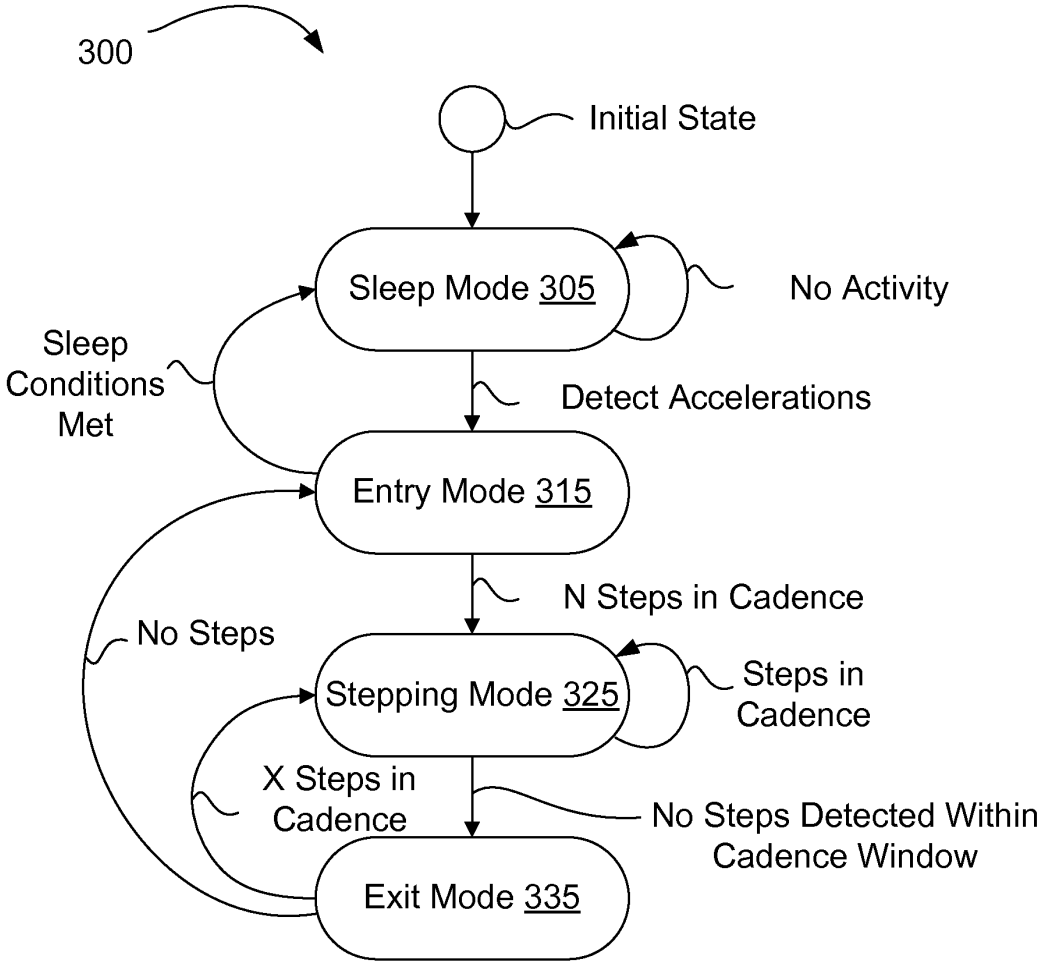
300
Initial State
Sleep Mode 305
No Activity
Sleep Conditions Met
Detect Accelerations
Entry Mode 315
N Steps in Cadence
No Steps
Stepping Mode 325
Steps in Cadence
X Steps in Cadence
No Steps Detected Within Cadence Window
Exit Mode 335

Figure 3

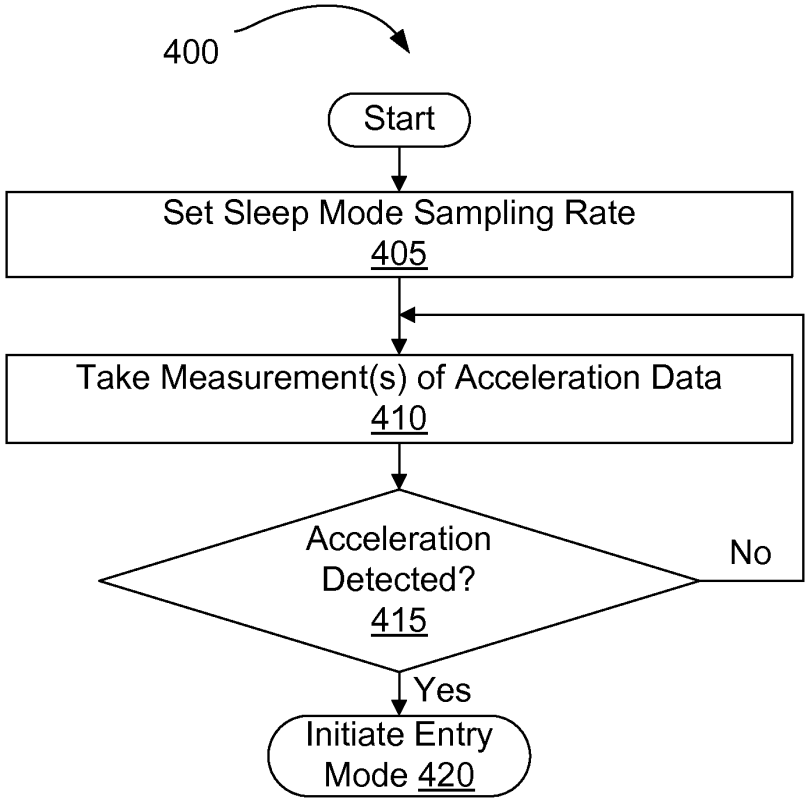
400
Start
Set Sleep Mode Sampling Rate
405
Take Measurement(s) of Acceleration Data
410
Acceleration
Detected?
415
No
Yes
Initiate Entry
Mode 420

Figure 4

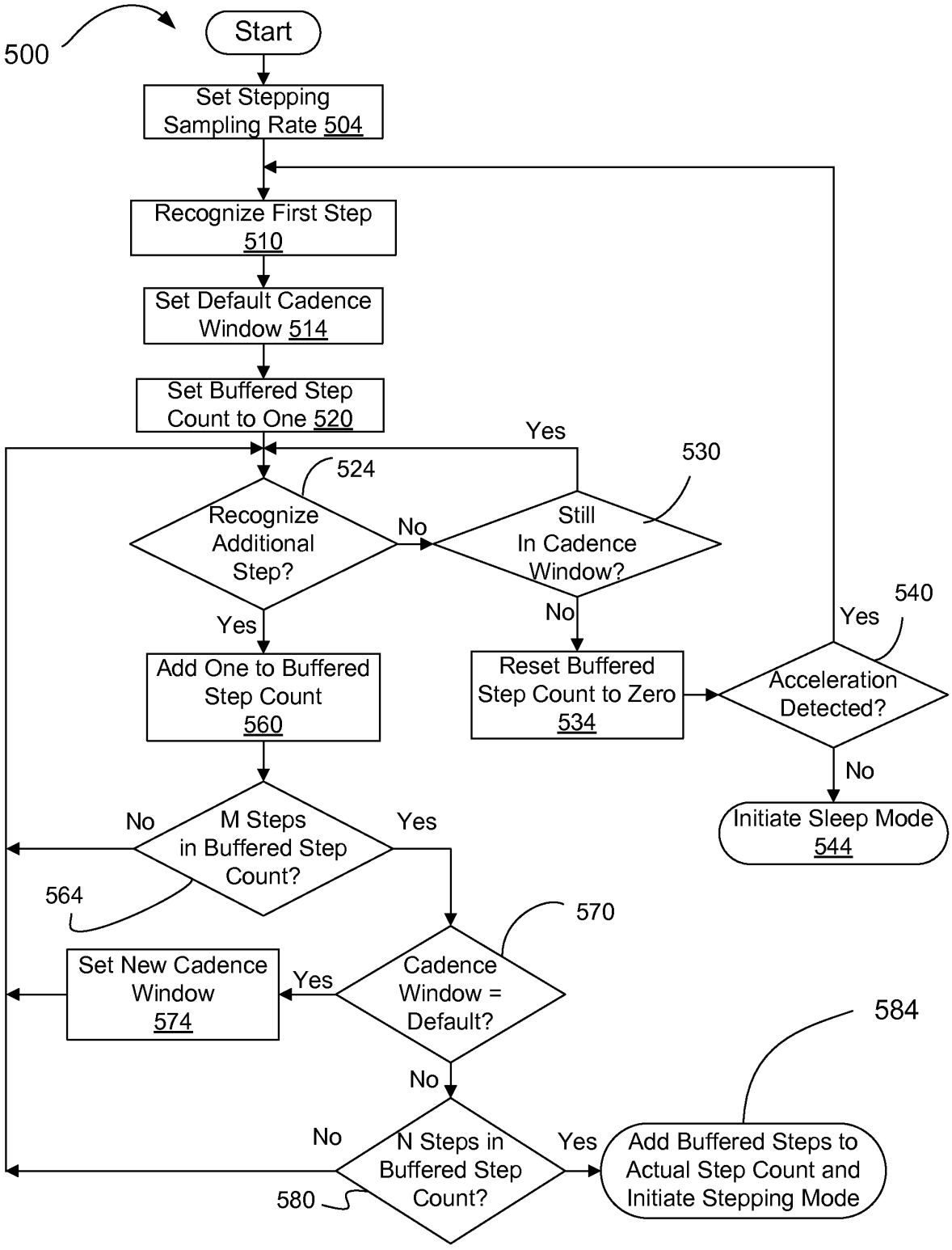
500
Start
Set Stepping Sampling Rate 504
Recognize First Step 510
Set Default Cadence Window 514
Set Buffered Step Count to One 520
524
Recognize Additional Step?
No
530
Still In Cadence Window?
Yes
No
Yes
Add One to Buffered Step Count 560
Reset Buffered Step Count to Zero 534
540
Acceleration Detected?
Yes
No
Initiate Sleep Mode 544
No
M Steps in Buffered Step Count?
Yes
564
570
Set New Cadence Window 574
Yes
Cadence Window = Default?
584
No
No
N Steps in Buffered Step Count?
Yes
Add Buffered Steps to Actual Step Count and Initiate Stepping Mode
580

Figure 5

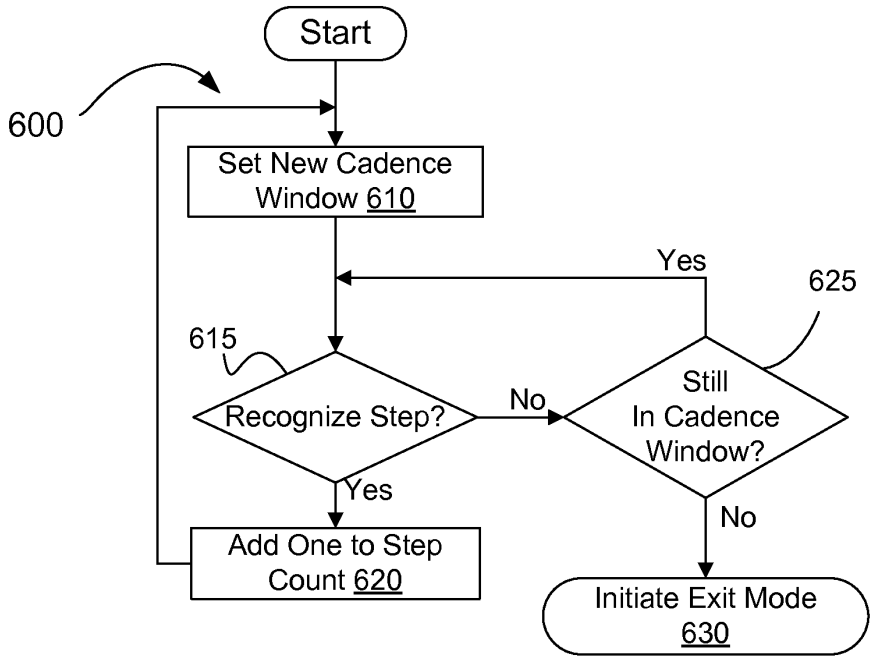
Start
600
Set New Cadence Window 610
Yes
625
615
Recognize Step?
No
Still In Cadence Window?
Yes
No
Add One to Step Count 620
Initiate Exit Mode 630

Figure 6

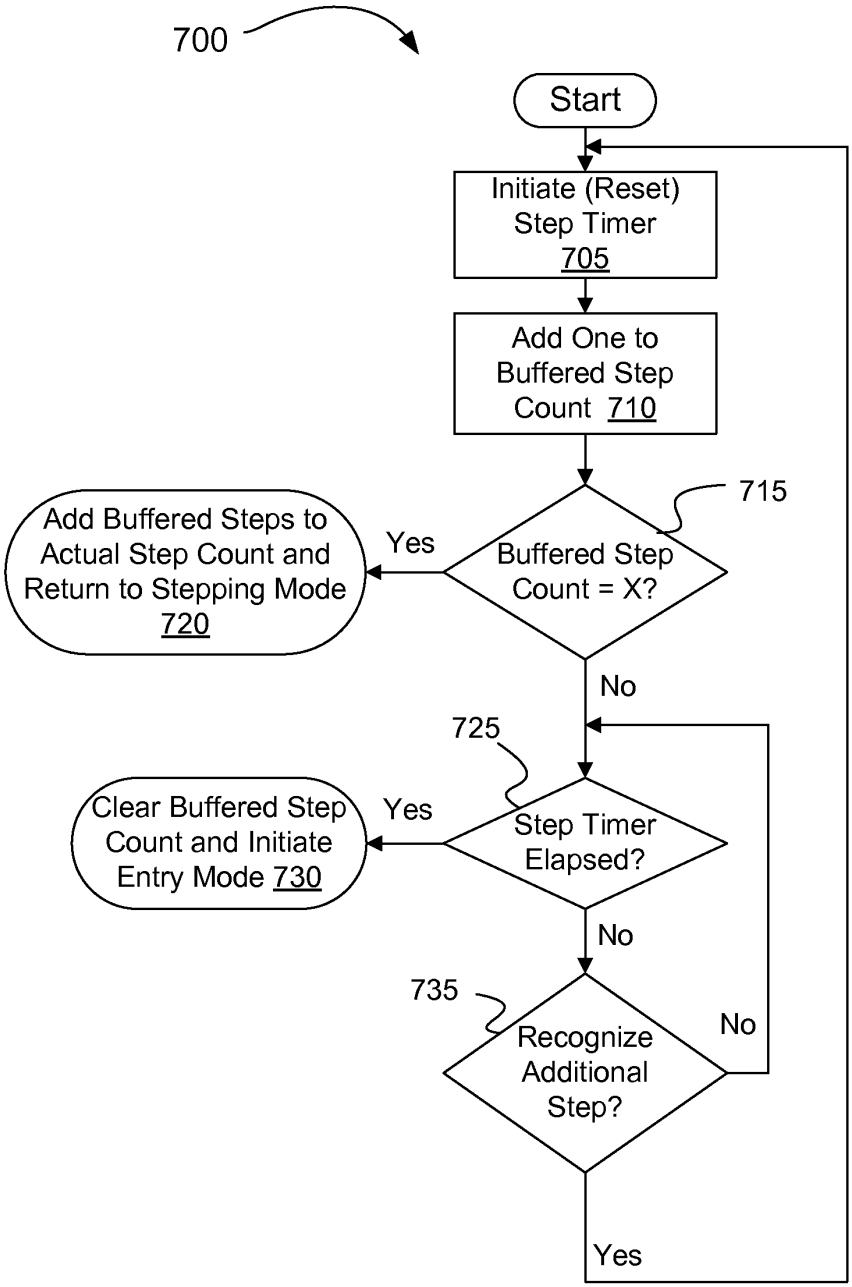
700
Start
Initiate (Reset) Step Timer 705
Add One to Buffered Step Count 710
715
Buffered Step Count = X?
Yes
Add Buffered Steps to Actual Step Count and Return to Stepping Mode 720
No
725
Step Timer Elapsed?
Yes
Clear Buffered Step Count and Initiate Entry Mode 730
No
735
Recognize Additional Step?
No
Yes

Figure 7

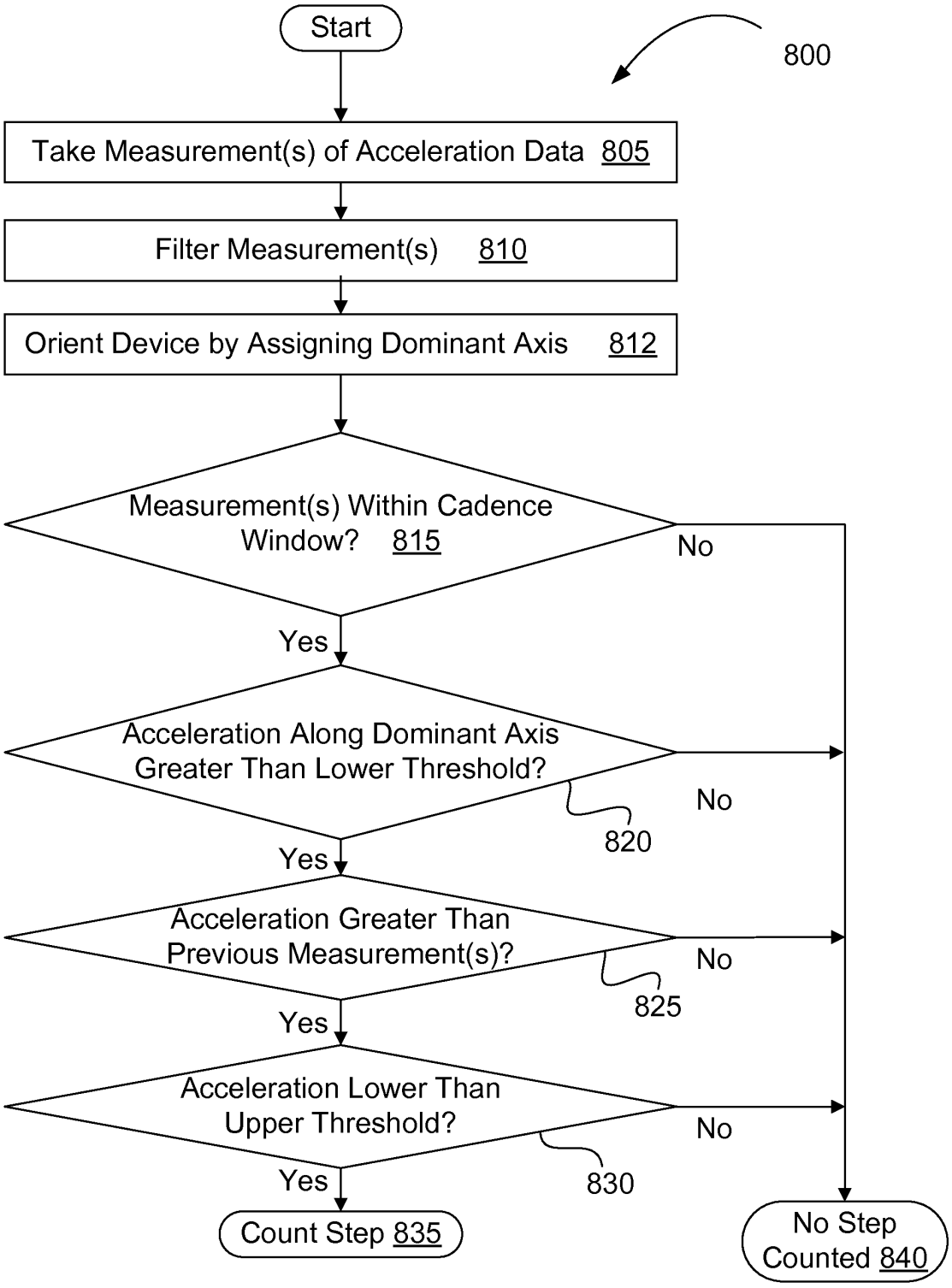
Start
800
Take Measurement(s) of Acceleration Data 805
Filter Measurement(s) 810
Orient Device by Assigning Dominant Axis 812
Measurement(s) Within Cadence Window? 815
No
Yes
Acceleration Along Dominant Axis Greater Than Lower Threshold?
No
820
Yes
Acceleration Greater Than Previous Measurement(s)?
No
825
Yes
Acceleration Lower Than Upper Threshold?
No
830
Yes
Count Step 835
No Step Counted 840

Figure 8

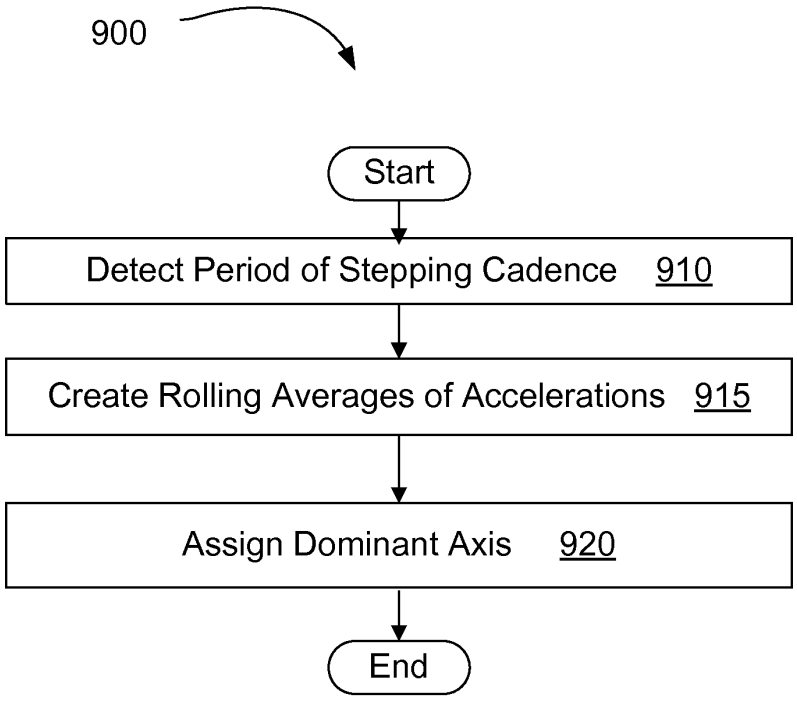
900
Start
Detect Period of Stepping Cadence 910
Create Rolling Averages of Accelerations 915
Assign Dominant Axis 920
End

Figure 9

PATENT COOPERATION TREATY

From the INTERNATIONAL SEARCHING AUTHORITY

To: LESTER VINCENT
BLAKELY, SOKOLOFF, TAYLOR & ZAFMAN LLP
1279 OAKMEAD PARKWAY
SUNNYVALE, CA 94085-4040

RECEIVED
OCT 28 2008
BLAKELY, SOKOLOFF, TAYLOR & ZAFMAN
SUNNYVALE

PCT

NOTIFICATION OF TRANSMITTAL OF THE INTERNATIONAL SEARCH REPORT AND THE WRITTEN OPINION OF THE INTERNATIONAL SEARCHING AUTHORITY, OR THE DECLARATION

(PCT Rule 44.1)

	Date of mailing *(day/month/year)*
Applicant's or agent's file reference 7538P044PCT	**FOR FURTHER ACTION** See paragraphs 1 and 4 below
International application No. PCT/US2008/072537	International filing date *(day/month/year)* 07 August 2008
Applicant FULLPOWER TECHNOLOGIES, INC.	

1. ☒ The applicant is hereby notified that the international search report and the written opinion of the International Searching Authority have been established and are transmitted herewith.

   Filing of amendments and statement under Article 19:
   The applicant is entitled, if he so wishes, to amend the claims of the international application (see Rule 46):

   When? The time limit for filing such amendments is normally two months from the date of transmittal of the international search report.

   Where? Directly to the International Bureau of WIPO, 34 chemin des Colombettes 1211 Geneva 20, Switzerland, Facsimile No.: +41 22 740 14 35

   For more detailed instructions, see the notes on the accompanying sheet.

2. ☐ The applicant is hereby notified that no international search report will be established and that the declaration under Article 17(2)(a) to that effect and the written opinion of the International Searching Authority are transmitted herewith.

3. ☐ **With regard to the protest** against payment of (an) additional fee(s) under Rule 40.2, the applicant is notified that:

   ☐ the protest together with the decision thereon has been transmitted to the International Bureau together with the applicant's request to forward the texts of both the protest and the decision thereon to the designated Offices.

   ☐ no decision has been made yet on the protest; the applicant will be notified as soon as a decision is made.

4. **Reminders**

   Shortly after the expiration of **18 months** from the priority date, the international application will be published by the International Bureau. If the applicant wishes to avoid or postpone publication, a notice of withdrawal of the international application, or of the priority claim, must reach the International Bureau as provided in Rules 90*bis*.1 and 90*bis*.3, respectively, before the completion of the technical preparations for international publication.

   The applicant may submit comments on an informal basis on the written opinion of the International Searching Authority to the International Bureau. The International Bureau will send a copy of such comments to all designated Offices unless an international preliminary examination report has been or is to be established. These comments would also be made available to the public but not before the expiration of 30 months from the priority date.

   Within **19 months** from the priority date, but only in respect of some designated Offices, a demand for international preliminary examination must be filed if the applicant wishes to postpone the entry into the national phase **until 30 months** from the priority date (in some Offices even later); otherwise, the applicant must, **within 20 months** from the priority date, perform the prescribed acts for entry into the national phase before those designated Offices.

   In respect of other designated Offices, the time limit of **30 months** (or later) will apply even if no demand is filed within 19 months.

   See the Annex to Form PCT/IB/301 and, for details about the applicable time limits, Office by Office, see the *PCT Applicant's Guide*, Volume II, National Chapters and the WIPO Internet site.

Name and mailing address of the ISA/US Mail Stop PCT, Attn: ISA/US Commissioner for Patents P.O. Box 1450, Alexandria, Virginia 22313-1450 Facsimile No. 571-273-3201	Authorized officer: Blaine R. Copenheaver Telephone No. 571-272-7774

Form PCT/ISA/220 (January 2004) *(See notes on accompanying sheet)*

Entered into PIP
By:

DATE IN TO FOREIGN DOCKETING 10/28/08
DOCKETED BY
REVIEWED BY
DATE OUT

PATENT COOPERATION TREATY

From the INTERNATIONAL SEARCHING AUTHORITY

To: LESTER VINCENT
BLAKELY, SOKOLOFF, TAYLOR & ZAFMAN LLP
1279 OAKMEAD PARKWAY
SUNNYVALE, CA 94085-4040

PCT

NOTIFICATION OF TRANSMITTAL OF THE INTERNATIONAL SEARCH REPORT AND THE WRITTEN OPINION OF THE INTERNATIONAL SEARCHING AUTHORITY, OR THE DECLARATION

(PCT Rule 44.1)

	Date of mailing *(day/month/year)* 22 OCT 2008
Applicant's or agent's file reference 7538P044PCT	**FOR FURTHER ACTION** See paragraphs 1 and 4 below
International application No. PCT/US2008/072537	International filing date *(day/month/year)* 07 August 2008
Applicant FULLPOWER TECHNOLOGIES, INC.	

1. ☒ The applicant is hereby notified that the international search report and the written opinion of the International Searching Authority have been established and are transmitted herewith.

   Filing of amendments and statement under Article 19:
   The applicant is entitled, if he so wishes, to amend the claims of the international application (see Rule 46):

   When? The time limit for filing such amendments is normally two months from the date of transmittal of the international search report.

   Where? Directly to the International Bureau of WIPO, 34 chemin des Colombettes 1211 Geneva 20, Switzerland, Facsimile No.: +41 22 740 14 35

   For more detailed instructions, see the notes on the accompanying sheet.

2. ☐ The applicant is hereby notified that no international search report will be established and that the declaration under Article 17(2)(a) to that effect and the written opinion of the International Searching Authority are transmitted herewith.

3. ☐ **With regard to the protest** against payment of (an) additional fee(s) under Rule 40.2, the applicant is notified that:

   ☐ the protest together with the decision thereon has been transmitted to the International Bureau together with the applicant's request to forward the texts of both the protest and the decision thereon to the designated Offices.

   ☐ no decision has been made yet on the protest; the applicant will be notified as soon as a decision is made.

4. **Reminders**

   Shortly after the expiration of **18 months** from the priority date, the international application will be published by the International Bureau. If the applicant wishes to avoid or postpone publication, a notice of withdrawal of the international application, or of the priority claim, must reach the International Bureau as provided in Rules 90*bis*.1 and 90*bis*.3, respectively, before the completion of the technical preparations for international publication.

   The applicant may submit comments on an informal basis on the written opinion of the International Searching Authority to the International Bureau. The International Bureau will send a copy of such comments to all designated Offices unless an international preliminary examination report has been or is to be established. These comments would also be made available to the public but not before the expiration of 30 months from the priority date.

   Within **19 months** from the priority date, but only in respect of some designated Offices, a demand for international preliminary examination must be filed if the applicant wishes to postpone the entry into the national phase **until 30 months** from the priority date (in some Offices even later); otherwise, the applicant must, **within 20 months** from the priority date, perform the prescribed acts for entry into the national phase before those designated Offices.

   In respect of other designated Offices, the time limit of **30 months** (or later) will apply even if no demand is filed within 19 months.

   See the Annex to Form PCT/IB/301 and, for details about the applicable time limits, Office by Office, see the *PCT Applicant's Guide*, Volume II, National Chapters and the WIPO Internet site.

Name and mailing address of the ISA/US Mail Stop PCT, Attn: ISA/US Commissioner for Patents P.O. Box 1450, Alexandria, Virginia 22313-1450 Facsimile No. 571-273-3201	Authorized officer: Blaine R. Copenheaver Telephone No. 571-272-7774

Form PCT/ISA/220 (January 2004) *(See notes on accompanying sheet)*

PATENT COOPERATION TREATY

PCT

INTERNATIONAL SEARCH REPORT

(PCT Article 18 and Rules 43 and 44)

Applicant's or agent's file reference	FOR FURTHER ACTION	see Form PCT/ISA/220 as well as, where applicable, item 5 below.
7538P044PCT		
International application No.	International filing date *(day/month/year)*	(Earliest) Priority Date *(day/month/year)*
PCT/US2008/072537	07 August 2008	08 August 2007
Applicant FULLPOWER TECHNOLOGIES, INC.		

This international search report has been prepared by this International Searching Authority and is transmitted to the applicant according to Article 18. A copy is being transmitted to the International Bureau.

This international search report consists of a total of 2 sheets.

☐ It is also accompanied by a copy of each prior art document cited in this report.

1. **Basis of the report**

   a. With regard to the **language**, the international search was carried out on the basis of:

   ☒ the international application in the language in which it was filed

   ☐ a translation of the international application into _____, which is the language of a translation furnished for the purposes of international search (Rules 12.3(a) and 23.1(b))

   b. ☐ With regard to any **nucleotide and/or amino acid sequence** disclosed in the international application, see Box No. I.

2. ☐ **Certain claims were found unsearchable** (see Box No. II)

3. ☐ **Unity of invention is lacking** (see Box No. III)

4. With regard to the **title**,

   ☒ the text is approved as submitted by the applicant

   ☐ the text has been established by this Authority to read as follows:

5. With regard to the **abstract**,

   ☒ the text is approved as submitted by the applicant

   ☐ the text has been established, according to Rule 38.2(b), by this Authority as it appears in Box No. IV. The applicant may, within one month from the date of mailing of this international search report, submit comments to this Authority

6. With regard to the **drawings**,

   a. the figure of the **drawings** to be published with the abstract is Figure No. 1

   ☐ as suggested by the applicant

   ☒ as selected by this Authority, because the applicant failed to suggest a figure

   ☐ as selected by this Authority, because this figure better characterizes the invention

   b. ☐ none of the figures is to be published with the abstract

Form PCT/ISA/210 (first sheet) (April 2005)

INTERNATIONAL SEARCH REPORT

International application No.
PCT/US2008/072537

A. CLASSIFICATION OF SUBJECT MATTER
IPC(8) - G01P 5/00 (2008.04)
USPC - 702/142
According to International Patent Classification (IPC) or to both national classification and IPC

B. FIELDS SEARCHED

Minimum documentation searched (classification system followed by classification symbols)
IPC(8) - G01P 5/00 (2008.04)
USPC - 702/141, 142

Documentation searched other than minimum documentation to the extent that such documents are included in the fields searched

Electronic data base consulted during the international search (name of data base and, where practicable, search terms used)
MicroPatent, Google Patent

C. DOCUMENTS CONSIDERED TO BE RELEVANT

Category*	Citation of document, with indication, where appropriate, of the relevant passages	Relevant to claim No.
X	US 6,522,266 B1 (SOEHREN et al) 18 February 2003 (18.02.2003) entire document	1-3, 6, 7, 13, 14, 20-22, 25, 26
---		---
Y		4, 5, 8-12, 15-19, 23-24, 27-31
Y	US 2005/0033200 A1 (SOEHREN et al) 10 February 2005 (10.02.2005) entire document	4-5, 15, 23, 24
Y	US 6,881,191 B2 (OAKLEY et al) 19 April 2005 (19.04.2005) entire document	8, 9, 16, 17, 27, 28
Y	US 2004/0225467 A1 (VOCK et al) 11 November 2004 (11.11.2004) entire document	10-12, 18, 19, 29-31

☐ Further documents are listed in the continuation of Box C. ☐

* Special categories of cited documents:
"A" document defining the general state of the art which is not considered to be of particular relevance
"E" earlier application or patent but published on or after the international filing date
"L" document which may throw doubts on priority claim(s) or which is cited to establish the publication date of another citation or other special reason (as specified)
"O" document referring to an oral disclosure, use, exhibition or other means
"P" document published prior to the international filing date but later than the priority date claimed
"T" later document published after the international filing date or priority date and not in conflict with the application but cited to understand the principle or theory underlying the invention
"X" document of particular relevance; the claimed invention cannot be considered novel or cannot be considered to involve an inventive step when the document is taken alone
"Y" document of particular relevance; the claimed invention cannot be considered to involve an inventive step when the document is combined with one or more other such documents, such combination being obvious to a person skilled in the art
"&" document member of the same patent family

Date of the actual completion of the international search	Date of mailing of the international search report
07 October 2008	22 OCT 2008
Name and mailing address of the ISA/US Mail Stop PCT, Attn: ISA/US, Commissioner for Patents P.O. Box 1450, Alexandria, Virginia 22313-1450 Facsimile No. 571-273-3201	Authorized officer: Blaine R. Copenheaver PCT Helpdesk: 571-272-4300 PCT OSP: 571-272-7774

Form PCT/ISA/210 (second sheet) (April 2005)

PATENT COOPERATION TREATY

From the
INTERNATIONAL SEARCHING AUTHORITY

To: LESTER VINCENT
BLAKELY, SOKOLOFF, TAYLOR & ZAFMAN LLP
1279 OAKMEAD PARKWAY
SUNNYVALE, CA 94085-4040

PCT

WRITTEN OPINION OF THE
INTERNATIONAL SEARCHING AUTHORITY

(PCT Rule 43*bis*.1)

Date of mailing *(day/month/year)*	22 OCT 2008
Applicant's or agent's file reference 7538P044PCT	FOR FURTHER ACTION See paragraph 2 below

International application No.	International filing date *(day/month/year)*	Priority date *(day/month/year)*
PCT/US2008/072537	07 August 2008	08 August 2007

International Patent Classification (IPC) or both national classification and IPC
IPC(8) - G01P 5/00 (2008.04)
USPC - 702/142

Applicant
FULLPOWER TECHNOLOGIES, INC.

1. This opinion contains indications relating to the following items:

- ☒ Box No. I Basis of the opinion
- ☐ Box No. II Priority
- ☐ Box No. III Non-establishment of opinion with regard to novelty, inventive step and industrial applicability
- ☐ Box No. IV Lack of unity of invention
- ☒ Box No. V Reasoned statement under Rule 43*bis*.1(a)(i) with regard to novelty, inventive step or industrial applicability; citations and explanations supporting such statement
- ☐ Box No. VI Certain documents cited
- ☐ Box No. VII Certain defects in the international application
- ☐ Box No. VIII Certain observations on the international application

2. **FURTHER ACTION**

If a demand for international preliminary examination is made, this opinion will be considered to be a written opinion of the International Preliminary Examining Authority ("IPEA") except that this does not apply where the applicant chooses an Authority other than this one to be the IPEA and the chosen IPEA has notified the International Bureau under Rule 66.1*bis*(b) that written opinions of this International Searching Authority will not be so considered.

If this opinion is, as provided above, considered to be a written opinion of the IPEA, the applicant is invited to submit to the IPEA a written reply together, where appropriate, with amendments, before the expiration of 3 months from the date of mailing of Form PCT/ISA/220 or before the expiration of 22 months from the priority date, whichever expires later.

For further options, see Form PCT/ISA/220.

3. For further details, see notes to Form PCT/ISA/220.

Name and mailing address of the ISA/US	Date of completion of this opinion	Authorized officer:
Mail Stop PCT, Attn: ISA/US Commissioner for Patents P.O. Box 1450, Alexandria, Virginia 22313-1450 Facsimile No. 571-273-3201	07 October 2008	Blaine Copenheaver PCT Helpdesk: 571-272-4300 PCT OSP: 571-272-7774

Form PCT/ISA/237 (cover sheet) (April 2007)

WRITTEN OPINION OF THE
INTERNATIONAL SEARCHING AUTHORITY

International application No.
PCT/US2008/072537

Box No. I Basis of this opinion

1. With regard to the **language**, this opinion has been established on the basis of:

   ☒ the international application in the language in which it was filed.

   ☐ a translation of the international application into _____ which is the language of a translation furnished for the purposes of international search (Rules 12.3(a) and 23.1(b)).

2. ☐ This opinion has been established taking into account the **rectification of an obvious mistake** authorized by or notified to this Authority under Rule 91 (Rule 43*bis*.1(a))

3. With regard to any **nucleotide and/or amino acid sequence** disclosed in the international application, this opinion has been established on the basis of:

   a. type of material

      ☐ a sequence listing

      ☐ table(s) related to the sequence listing

   b. format of material

      ☐ on paper

      ☐ in electronic form

   c. time of filing/furnishing

      ☐ contained in the international application as filed

      ☐ filed together with the international application in electronic form

      ☐ furnished subsequently to this Authority for the purposes of search

4. ☐ In addition, in the case that more than one version or copy of a sequence listing and/or table(s) relating thereto has been filed or furnished, the required statements that the information in the subsequent or additional copies is identical to that in the application as filed or does not go beyond the application as filed, as appropriate, were furnished.

5. Additional comments:

Form PCT/ISA/237 (Box No. I) (April 2007)

WRITTEN OPINION OF THE
INTERNATIONAL SEARCHING AUTHORITY

International application No.
PCT/US2008/072537

Box No. V **Reasoned statement under Rule 43*bis*.1(a)(i) with regard to novelty, inventive step or industrial applicability; citations and explanations supporting such statement**

1. Statement

Novelty (N)	Claims	4, 5, 8-12, 15-19, 23, 24, 27-31	YES
	Claims	1-3, 6, 7, 13, 14, 20-22, 25, 26	NO
Inventive step (IS)	Claims	None	YES
	Claims	1-31	NO
Industrial applicability (IA)	Claims	1-31	YES
	Claims	None	NO

2. Citations and explanations:

Claims 1-3, 6, 7, 13, 14, 20-22, 25, and 26 lack novelty under PCT Article 33(2) as being anticipated by Soehren et al. (US 6,522,266 B1), hereinafter referred to as Soehren '266.

Regarding Claim 1, Soehren '266 discloses a method of monitoring human activity (navigation system for a human, abstract), comprising:
monitoring accelerations (100, fig. 1) using an inertial sensor (414, fig. 4) disposed at one of a plurality of locations on a human body, wherein at least one of the plurality of locations is not a foot location (backpack, wrist or arm location, col. 14, lines 23-30);
counting a plurality of steps based on the accelerations (counting steps, col. 6, line 35);
determining a gait characteristic of the plurality of steps (frequency of step, col. 6, lines 32-36);
using the gait characteristic to determine a stride length (step length determined, col. 6, lines 16-28); and
determining at least one of a distance traveled and a speed of travel based on the stride length (distance traveled determined, col. 6, lines 36-39).

Regarding Claim 13, Soehren '266 discloses a mobile apparatus (navigation system for a human, abstract), comprising:
an inertial sensor (414, fig. 4) to monitor accelerations (100, fig. 1) from one of a plurality of locations on a body, wherein at least one of the plurality of locations is not a foot location (backpack, wrist or arm location, col. 14, lines 23-30);
a step counting logic coupled with the inertial sensor to count a plurality of steps based on the accelerations (counting steps, col. 6, line 35);
a gait logic coupled with the step counting logic to determine a gait characteristic of the plurality of steps (modeling step distance, col. 6, lines 16-28); and
a distance logic coupled with the gait logic to determine a stride length of the plurality of steps based on the gait characteristic (step length versus walking speed algorithm, col. 6, lines 20-28; also col. 14, lines 42-57; the distance is determined, col. 6, lines 32-36);
and to apply the stride length to the plurality of steps to determine at least one of a distance traveled and a speed of travel (motion classifier combines the step length and frequency to determine the distance traveled, col. 6, lines 36-39).

Regarding claim 20, Soehren '266 discloses a machine-accessible storage medium including instructions that, when executed by a machine, cause the machine to perform a method (computer or processor 404, fig. 4; col. 6, lines 8-53), comprising:
monitoring accelerations (100, fig. 1) using an inertial sensor (414, fig. 4) disposed at one of a plurality of locations on a human body, wherein at least one of the plurality of locations is not a foot location (backpack, wrist or arm location, col. 14, lines 23-30);
counting a plurality of steps based on the accelerations (counting steps, col. 6, line 35);
determining a gait characteristic of the plurality of steps (frequency of step, col. 6, lines 32-36);
using the gait characteristic to determine a stride length (step length determined, col. 6, lines 16-28); and
determining at least one of a distance traveled and a speed of travel based on the stride length (distance traveled determined, col. 6, lines 36-39).

Regarding Claims 2 and 21, Soehren '266 discloses the gait characteristic comprises a step cadence (step per unit time, col. 6, lines 33-36).

Regarding Claims 3 and 22, Soehren '266 discloses that determining the stride length includes locating a stride length associated with the gait characteristic in a data structure (step length versus walking speed algorithm, col. 6, lines 20-28; also col. 14, lines 42-57; fig. 6 shows data structure).

Regarding Claims 6, 7, 14, 25, and 26, Soehren '266 discloses receiving distance information, wherein the distance information is based on at least one of global positioning system (GPS) data, network triangulation data, or user input (d-GPS 510, fig. 5, col. 8, lines 45-61) and automatically calibrating the stride length based on a difference between the received distance information and the determined distance traveled (col. 8, line 62 to col. 9, line24).

Supplemental Box

In case **the space in any of the preceding boxes is not sufficient.**
Continuation of:

Claims 4, 5, 15, 23, and 24 lack an inventive step under PCT Article 33(3) as being obvious over Soehren '266 in view of Soehren et al. (US 2005/0033200 A1), hereinafter referred to as Soehren '200.

Regarding Claims 4, 15, and 23, Soehren '266 discloses that the data structure includes a plurality of entries, each of the plurality of entries associating a distinct stride length with one or more distinct gait characteristics (col. 6, lines 20-28; also col. 14, lines 42-57; fig. 6), but lacks the teaching of determining one or more user attributes; and modifying the data structure based on the one or more user attributes to calibrate the stride length by changing one or more of the plurality of entries.
Soehren '200 teaches a method of monitoring human activity (classifying and measuring human motion, abstract), comprising:
monitoring accelerations using an inertial sensor (IMU 24, fig. 2, para. 0033) in order to provide a distance estimate (28, para. 0041) and further teaches determining one or more user attributes (52, information on the state of the person monitored, para. 0041); and modifying the data structure based on the one or more user attributes 52 to 50 to Kalman filter 41) to calibrate the stride length by changing one or more of the plurality of entries (Kalman filter feeds back to motion classification unit 28, where the stride length is initially calculated, para. 0012, 0041).
It would have been obvious to one of ordinary skill in the art at the time of the invention to provide the user attributes of Soehren '200 to the data structure and analysis of Soehren '266 in order to monitor persons with health problems so that help can be sent should they become incapacitated (Soehren '200, para. 0004).

Regarding Claims 5 and 24, Soehren '266 lacks the teaching of receiving a user input of one or more user attributes; and generating the data structure using the one or more user attributes.
Soehren '200 teaches a method of monitoring human activity (classifying and measuring human motion, abstract), comprising:
monitoring accelerations using an inertial sensor (IMU 24, fig. 2, para. 0033) in order to provide a distance estimate (28, para. 0041) and further teaches receiving a user input of one or more user attributes (52, information on the state of the person monitored, para. 0041); and generating the data structure using the one or more user attributes (52 to 50 to Kalman filter 41).
It would have been obvious to one of ordinary skill in the art at the time of the invention to provide the user attributes of Soehren '200 to the data structure and analysis of Soehren '266 in order to monitor persons with health problems so that help can be sent should they become incapacitated (Soehren '200, para. 0004).

Claims 8, 9, 16, 17, 27, and 28 lack an inventive step under PCT Article 33(3) as being obvious over Soehren '266 in view of Oakley et al., hereinafter referred to as Oakley.

Regarding claims 8, 16, and 27, Soehren '266 teaches the use of a stride length to determine a distance travelled as previously described with respect to claim 1, but lacks the teaching of receiving a heart rate from a heart rate sensor; and determining information about the distance traveled based on the heart rate.
Oakley teaches a movement sensor system (abstract) in which heart rate is monitored by a heart rate sensor (col. 1, lines 8-10) and is used to determine information about the stride length based on the heart rate (heart-rate measurement used to determine user's stride length or number of strides, col. 3, lines 19-24).
It would have been obvious to one of ordinary skill in the art at the time of the invention to use the heart rate information as taught by Oakley to determine the distance travelled of Soehren '266 in order to aid in determining the energy expenditure of the user over distance in order to define a weight loss regimen (Oakley, col. 1, lines 48-55).

Regarding claims 9 and 17, Soehren '266 discloses that determining information comprises determining an incline (col. 3, lines 8-14), and adjusting a stride length to gait characteristic based on the incline (230, fig. 2).

Regarding claim 28, Soehren '266 discloses that determining information comprises determining an incline (col. 3, lines 8-14), and adjusting a stride length to cadence correlation based on the incline (230, fig. 2).

Claims 10-12, 18, 19, and 29-31 lack an inventive step under PCT Article 33(3) as being obvious over Soehren '266 in view of Vock et al., hereinafter referred to as Vock.

Regarding claims 10, 18, and 29, Soehren '266 lacks the teaching of using a competition logic to compare the distance traveled and the speed of travel to stored race data to generate a comparison result; and presenting a real time performance indication that includes the comparison result.
Vock teaches the use of inertial sensors in a distance (para. 0074) and speed (para. 0050) measuring system and further teaches the use of a competition logic (controller subsystem 12, fig. 1A) to compare the distance traveled and the speed of travel to stored race data to generate a comparison result (claim 1; para. 0081); and
presenting a real time performance indication that includes the comparison result (para. 0191).
It would have been obvious to one of ordinary skill in the art at the time of the invention to use the comparison data of Vock in the method of Soehren in order to provide a quantification of a user's activity in relation to others (Vock, para. 0022) so as to guide him in improving his skills.

Regarding claims 11 and 30, Soehren '266 lack the teaching of receiving stored race data from one of a server and a mobile device.
Vock teaches receiving stored race data from one of a server and a mobile device (82, fig. 1B).
It would have been obvious to one of ordinary skill in the art at the time of the invention to use the server of Vock to download the race data in order to allow the user to compare his statistics to a plurality of statistics from other users (Vock, para. 0022).

Supplemental Box

In case the space in any of the preceding boxes is not sufficient.
Continuation of:

Regarding claims 12 and 31, modified Soehren '266 discloses comparing data as shown above, and Soehren '266 further teaches normalizing at least one of the distance traveled, the speed of travel, the stored distance traveled, and the stored speed of travel (accelerometer signals are divided into 2.56 second signal segments, further processing determines the human motion, col. 15, lines 25-32; the human motion is used to determine the distance travelled, col. 15, lines 2-4).

Regarding claim 19, Soehren '266 lacks the teaching of a competition logic to enable users to set up time shifted races.
Vock teaches a competition logic which can enable users to set up time shifted races (comparing scores with other players across the world, para. 0404).
It would have been obvious to one of ordinary skill in the art at the time of the invention use the competition logic of Vock in the apparatus of Soehren '266 in order to allow players to improve their abilities by comparison with their own previous score or with other players (Vock, para. 0404).

Claims 1-31 meet the criteria set out in PCT Article 33(4), and thus have industrial applicability because the subject matter claimed can be made or used in industry.

NOTES TO FORM PCT/ISA/220

These Notes are intended to give the basic instructions concerning the filing of amendments under Article 19. The Notes are based on the requirements of the Patent Cooperation Treaty, the Regulations and the Administrative Instructions under that Treaty. In case of discrepancy between these Notes and those requirements, the latter are applicable. For more detailed information, see also the *PCT Applicant's Guide*, a publication of WIPO.

In these Notes, "Article," "Rule" and "Section" refer to the provisions of the PCT, the PCT Regulations and the PCT Administrative Instructions, respectively.

INSTRUCTIONS CONCERNING AMENDMENTS UNDER ARTICLE 19

The applicant has, after having received the international search report and the written opinion of the International Searching Authority, one opportunity to amend the claims of the international application. It should however be emphasized that, since all parts of the international application (claims, description and drawings) may be amended during the international preliminary examination procedure, there is usually no need to file amendments of the claims under Article 19 except where, e.g. the applicant wants the latter to be published for the purposes of provisional protection or has another reason for amending the claims before international publication. Furthermore, it should be emphasized that provisional protection is available in some States only (see *PCT Applicant's Guide*, Volume I/A, Annexes B1 and B2).

The attention of the applicant is drawn to the fact that amendments to the claims under Article 19 are not allowed where the International Searching Authority has declared, under Article 17(2), that no international search report would be established (see *PCT Applicant's Guide*, Volume I/A, paragraph 296).

What parts of the international application may be amended ?

Under Article 19, only the claims may be amended.

During the international phase, the claims may also be amended (or further amended) under Article 34 before the International Preliminary Examining Authority. The description and drawings may only be amended under Article 34 before the International Preliminary Examining Authority.

Upon entry into the national phase, all parts of the international application may be amended under Article 28 or, where applicable, Article 41.

When ? Within 2 months from the date of transmittal of the international search report or 16 months from the priority date, whichever time limit expires later. It should be noted, however, that the amendments will be considered as having been received on time if they are received by the International Bureau after the expiration of the applicable time limit but before the completion of the technical preparations for international publication (Rule 46.1).

Where not to file the amendments ?

The amendments may only be filed with the International Bureau and not with the receiving Office or the International Searching Authority (Rule 46.2).

Where a demand for international preliminary examination has been/is filed, see below.

How ? Either by cancelling one or more entire claims, by adding one or more new claims or by amending the text of one or more of the claims as filed.

A replacement sheet must be submitted for each sheet of the claims which, on account of an amendment or amendments, differs from the sheet originally filed.

All the claims appearing on a replacement sheet must be numbered in Arabic numerals. Where a claim is cancelled, no renumbering of the other claims is required. In all cases where claims are renumbered, they must be renumbered consecutively (Section 205(b)).

The amendments must be made in the language in which the international application is to be published.

What documents must/may accompany the amendments ?

Letter (Section 205(b)):

The amendments must be submitted with a letter.

The letter will not be published with the international application and the amended claims. It should not be confused with the "Statement under Article 19(1)" (see below, under "Statement under Article 19(1)").

The letter must be in English or French, at the choice of the applicant. However, if the language of the international application is English, the letter must be in English; if the language of the international application is French, the letter must be in French.

PATENT COOPERATION TREATY

From the INTERNATIONAL SEARCHING AUTHORITY

To:
LESTER J. VINCENT
BLAKELY, SOKOLOFF, TAYLOR & ZAFMAN LLP
1279 OAKMEAD PARKWAY
SUNNYVALE, CA 94085-4040

PCT

NOTIFICATION OF TRANSMITTAL OF THE INTERNATIONAL SEARCH REPORT AND THE WRITTEN OPINION OF THE INTERNATIONAL SEARCHING AUTHORITY, OR THE DECLARATION

(PCT Rule 44.1)

Date of mailing *(day month year)*	07 AUG 2009
Applicant's or agent's file reference 8689P060PCT	**FOR FURTHER ACTION** See paragraphs 1 and 4 below
International application No. PCT/US 09/48523	International filing date *(day month year)* 24 June 2009 (24.06.2009)
Applicant DP TECHNOLOGIES, INC.	

1. ☒ The applicant is hereby notified that the international search report and the written opinion of the International Searching Authority have been established and are transmitted herewith.

   Filing of amendments and statement under Article 19:
   The applicant is entitled, if he so wishes, to amend the claims of the international application (see Rule 46):

   When? The time limit for filing such amendments is normally two months from the date of transmittal of the international search report.

   Where? Directly to the International Bureau of WIPO, 34 chemin des Colombettes 1211 Geneva 20, Switzerland, Facsimile No.: +41 22 338 8270

   For more detailed instructions, see the notes on the accompanying sheet.

2. ☐ The applicant is hereby notified that no international search report will be established and that the declaration under Article 17(2)(a) to that effect and the written opinion of the International Searching Authority are transmitted herewith.

3. ☐ **With regard to the protest** against payment of (an) additional fee(s) under Rule 40.2, the applicant is notified that:

   ☐ the protest together with the decision thereon has been transmitted to the International Bureau together with the applicant's request to forward the texts of both the protest and the decision thereon to the designated Offices.

   ☐ no decision has been made yet on the protest; the applicant will be notified as soon as a decision is made.

4. **Reminders**

   Shortly after the expiration of **18 months** from the priority date, the international application will be published by the International Bureau. If the applicant wishes to avoid or postpone publication, a notice of withdrawal of the international application, or of the priority claim, must reach the International Bureau as provided in Rules 90*bis*.1 and 90*bis*.3, respectively, before the completion of the technical preparations for international publication.

   The applicant may submit comments on an informal basis on the written opinion of the International Searching Authority to the International Bureau. The International Bureau will send a copy of such comments to all designated Offices unless an international preliminary examination report has been or is to be established. These comments would also be made available to the public but not before the expiration of 30 months from the priority date.

   Within **19 months** from the priority date, but only in respect of some designated Offices, a demand for international preliminary examination must be filed if the applicant wishes to postpone the entry into the national phase **until 30 months** from the priority date (in some Offices even later); otherwise, the applicant must, **within 20 months** from the priority date, perform the prescribed acts for entry into the national phase before those designated Offices.

   In respect of other designated Offices, the time limit of **30 months** (or later) will apply even if no demand is filed within 19 months.

   See the Annex to Form PCT/IB/301 and, for details about the applicable time limits, Office by Office, see the *PCT Applicant's Guide*, Volume II, National Chapters and the WIPO Internet site.

Name and mailing address of the ISA/US Mail Stop PCT, Attn: ISA/US Commissioner for Patents P.O. Box 1450, Alexandria, Virginia 22313-1450 Facsimile No. 571-273-3201	Authorized officer: Lee W. Young PCT Helpdesk: 571-272-4300 PCT OSP: 571-272-7774

Form PCT/ISA/220 (January 2004)

(See notes on accompanying sheet)

PATENT COOPERATION TREATY

PCT

INTERNATIONAL SEARCH REPORT

(PCT Article 18 and Rules 43 and 44)

Applicant's or agent's file reference 8689P060PCT	**FOR FURTHER ACTION**	see Form PCT/ISA/220 as well as, where applicable, item 5 below.
International application No. PCT/US 09/48523	International filing date *(day/month/year)* 24 June 2009 (24.06.2009)	(Earliest) Priority Date *(day/month/year)* 24 June 2008 (24.06.2008)
Applicant DP TECHNOLOGIES, INC.		

This international search report has been prepared by this International Searching Authority and is transmitted to the applicant according to Article 18. A copy is being transmitted to the International Bureau.

This international search report consists of a total of 2 sheets.

☐ It is also accompanied by a copy of each prior art document cited in this report.

1. **Basis of the report**

a. With regard to the **language**, the international search was carried out on the basis of:

☒ the international application in the language in which it was filed.

☐ a translation of the international application into _____ which is the language of a translation furnished for the purposes of international search (Rules 12.3(a) and 23.1(b)).

b. ☐ This international search report has been established taking into account the **rectification of an obvious mistake** authorized by or notified to this Authority under Rule 91 (Rule 43.6*bis*(a)).

c. ☐ With regard to any **nucleotide and/or amino acid sequence** disclosed in the international application, see Box No. I.

2. ☐ **Certain claims were found unsearchable** (see Box No. II).

3. ☐ **Unity of invention is lacking** (see Box No. III).

4. With regard to the **title**,

☒ the text is approved as submitted by the applicant.

☐ the text has been established by this Authority to read as follows:

5. With regard to the **abstract**,

☒ the text is approved as submitted by the applicant.

☐ the text has been established, according to Rule 38.2(b), by this Authority as it appears in Box No. IV. The applicant may, within one month from the date of mailing of this international search report, submit comments to this Authority.

6. With regard to the **drawings**,

a. the figure of the **drawings** to be published with the abstract is Figure No. 1

☐ as suggested by the applicant.

☒ as selected by this Authority, because the applicant failed to suggest a figure.

☐ as selected by this Authority, because this figure better characterizes the invention.

b. ☐ none of the figures is to be published with the abstract.

Form PCT/ISA/210 (first sheet) (April 2007)

INTERNATIONAL SEARCH REPORT

International application No.
PCT/US 09/48523

A. CLASSIFICATION OF SUBJECT MATTER
IPC(8) - G01C 22/00 (2009.01)
USPC - 702/160
According to International Patent Classification (IPC) or to both national classification and IPC

B. FIELDS SEARCHED

Minimum documentation searched (classification system followed by classification symbols)
USPC - 702/160

Documentation searched other than minimum documentation to the extent that such documents are included in the fields searched
USPC - 702/141; 702/155 -- text search, see search terms below

Electronic data base consulted during the international search (name of data base and, where practicable, search terms used)
PubWEST (PGPB,USPT,EPAB,JPAB); Google; Search Terms Used:
motion, acceleration, inertial, sensor, notification, application, program, confidence, probability, rating, setting, walking, running, cadence, revolution, axis, monitor, state, biking, plurality, potential, count

C. DOCUMENTS CONSIDERED TO BE RELEVANT

Category*	Citation of document, with indication, where appropriate, of the relevant passages	Relevant to claim No.
X ----- Y	US 2005/0222801 A1 (Wulff et al.), 06 October 2005 (06.10.2005), especially Fig 3 and para [0022]-[0027], [0040], [0043]-[0045]	1, 2, 6-8, 12-14, 19 ---------- 3-5, 9-11, 15-18
Y	US 2006/0223547 A1 (Chin et al.), 05 October 2006 (05.10.2006), especially para [0065]	3, 4, 9, 10, 15, 16
Y	US 7,200,517 B2 (Darley et al.), 03 April 2007 (03.04.2007), especially Fig 7 and col 72, ln 45-50	5, 11, 17, 18

☐ Further documents are listed in the continuation of Box C. ☐

* Special categories of cited documents:
"A" document defining the general state of the art which is not considered to be of particular relevance
"E" earlier application or patent but published on or after the international filing date
"L" document which may throw doubts on priority claim(s) or which is cited to establish the publication date of another citation or other special reason (as specified)
"O" document referring to an oral disclosure, use, exhibition or other means
"P" document published prior to the international filing date but later than the priority date claimed
"T" later document published after the international filing date or priority date and not in conflict with the application but cited to understand the principle or theory underlying the invention
"X" document of particular relevance; the claimed invention cannot be considered novel or cannot be considered to involve an inventive step when the document is taken alone
"Y" document of particular relevance; the claimed invention cannot be considered to involve an inventive step when the document is combined with one or more other such documents, such combination being obvious to a person skilled in the art
"&" document member of the same patent family

Date of the actual completion of the international search	Date of mailing of the international search report
29 July 2009 (29.07.2009)	07 AUG 2009
Name and mailing address of the ISA/US Mail Stop PCT, Attn: ISA/US, Commissioner for Patents P.O. Box 1450, Alexandria, Virginia 22313-1450 Facsimile No. 571-273-3201	Authorized officer: Lee W. Young PCT Helpdesk: 571-272-4300 PCT OSP: 571-272-7774

Form PCT/ISA/210 (second sheet) (April 2007)

PATENT COOPERATION TREATY

From the
INTERNATIONAL SEARCHING AUTHORITY

To:
LESTER J. VINCENT
BLAKELY, SOKOLOFF, TAYLOR & ZAFMAN LLP
1279 OAKMEAD PARKWAY
SUNNYVALE, CA 94085-4040

PCT

WRITTEN OPINION OF THE INTERNATIONAL SEARCHING AUTHORITY

(PCT Rule 43*bis*.1)

Date of mailing *(day/month/year)*	07 AUG 2009
Applicant's or agent's file reference 8689P060PCT	FOR FURTHER ACTION See paragraph 2 below

International application No.	International filing date *(day month year)*	Priority date *(day month year)*
PCT/US 09/48523	24 June 2009 (24.06.2009)	24 June 2008 (24.06.2008)

International Patent Classification (IPC) or both national classification and IPC
IPC(8) - G01C 22/00 (2009.01)
USPC - 702/160

Applicant DP TECHNOLOGIES, INC.

1. This opinion contains indications relating to the following items:

- ☒ Box No. I Basis of the opinion
- ☐ Box No. II Priority
- ☐ Box No. III Non-establishment of opinion with regard to novelty, inventive step and industrial applicability
- ☐ Box No. IV Lack of unity of invention
- ☒ Box No. V Reasoned statement under Rule 43*bis*.1(a)(i) with regard to novelty, inventive step or industrial applicability; citations and explanations supporting such statement
- ☐ Box No. VI Certain documents cited
- ☐ Box No. VII Certain defects in the international application
- ☐ Box No. VIII Certain observations on the international application

2. **FURTHER ACTION**

If a demand for international preliminary examination is made, this opinion will be considered to be a written opinion of the International Preliminary Examining Authority ("IPEA") except that this does not apply where the applicant chooses an Authority other than this one to be the IPEA and the chosen IPEA has notified the International Bureau under Rule 66.1*bis*(b) that written opinions of this International Searching Authority will not be so considered.

If this opinion is, as provided above, considered to be a written opinion of the IPEA, the applicant is invited to submit to the IPEA a written reply together, where appropriate, with amendments, before the expiration of 3 months from the date of mailing of Form PCT/ISA/220 or before the expiration of 22 months from the priority date, whichever expires later.

For further options, see Form PCT/ISA/220.

3. For further details, see notes to Form PCT/ISA/220.

Name and mailing address of the ISA/US	Date of completion of this opinion	Authorized officer:
Mail Stop PCT, Attn: ISA/US Commissioner for Patents P.O. Box 1450, Alexandria, Virginia 22313-1450 Facsimile No. 571-273-3201	29 July 2009 (29.07.2009)	Lee W. Young PCT Helpdesk: 571-272-4300 PCT OSP: 571-272-7774

Form PCT/ISA/237 (cover sheet) (April 2007)

WRITTEN OPINION OF THE
INTERNATIONAL SEARCHING AUTHORITY

International application No.
PCT/US 09/48523

Box No. I Basis of this opinion

1. With regard to the **language**, this opinion has been established on the basis of:

   ☒ the international application in the language in which it was filed.

   ☐ a translation of the international application into _____ which is the language of a translation furnished for the purposes of international search (Rules 12.3(a) and 23.1(b)).

2. ☐ This opinion has been established taking into account the **rectification of an obvious mistake** authorized by or notified to this Authority under Rule 91 (Rule 43*bis*.1(a))

3. With regard to any **nucleotide and/or amino acid sequence** disclosed in the international application, this opinion has been established on the basis of:

   a. type of material

      ☐ a sequence listing

      ☐ table(s) related to the sequence listing

   b. format of material

      ☐ on paper

      ☐ in electronic form

   c. time of filing/furnishing

      ☐ contained in the international application as filed

      ☐ filed together with the international application in electronic form

      ☐ furnished subsequently to this Authority for the purposes of search

4. ☐ In addition, in the case that more than one version or copy of a sequence listing and/or table(s) relating thereto has been filed or furnished, the required statements that the information in the subsequent or additional copies is identical to that in the application as filed or does not go beyond the application as filed, as appropriate, were furnished.

5. Additional comments:

WRITTEN OPINION OF THE
INTERNATIONAL SEARCHING AUTHORITY

International application No.
PCT/US 09/48523

Box No. V **Reasoned statement under Rule 43*bis*.1(a)(i) with regard to novelty, inventive step or industrial applicability; citations and explanations supporting such statement**

1. Statement

Novelty (N)	Claims	3-5, 9-11, 15-18	YES
	Claims	1, 2, 6-8, 12-14, 19	NO
Inventive step (IS)	Claims	none	YES
	Claims	1-19	NO
Industrial applicability (IA)	Claims	1-19	YES
	Claims	none	NO

2. Citations and explanations:

Claims 1, 2, 6-8, 12-14, and 19 lack novelty under PCT Article 33(2) as being anticipated by US 2005/0222801 A1 to Wulff et al. (hereinafter 'Wulff').

Regarding claim 1, Wulff discloses a a method of monitoring a motion state, comprising: monitoring accelerations by an electronic device using an inertial sensor (see Fig 3 and para [0023]); identifying, by the electronic device, a current motion state based on the accelerations (see para [0024]); determining an application that subscribes to a motion state identification service (see para [0027] -- 'determines the corresponding procedure of the plurality of predetermined procedures'); and notifying the application of the current motion state (see para [0043]-[0045]).

Regarding claim 2, Wulff discloses the method of claim 1. Wulff further discloses determining whether the current motion state is different from a previous motion state (see para [0024]); and modifying one or more settings of the application if the current motion state is different from the previous motion state (see para [0040]).

Regarding claim 6, Wulff discloses the method of claim 1. Wulff further discloses identifying notification criteria associated with the application (see para [0026] -- 'threshold value'); and notifying the application of the current motion state when the identified notification criteria are satisfied (see para [0026]).

Regarding claim 7, Wulff discloses a computer readable storage medium including instructions that, when executed by a processor, cause the processor to perform a method comprising: monitoring accelerations by an electronic device using an inertial sensor (see Fig 3 and para [0023]); identifying, by the electronic device, a current motion state based on the accelerations (see para [0024]); determining an application that subscribes to a motion state identification service (see para [0027] -- 'determines the corresponding procedure of the plurality of predetermined procedures'); and notifying the application of the current motion state (see para [0043]-[0045]).

Regarding claim 8, Wulff discloses the computer readable storage medium of claim 7. Wulff further discloses determining whether the current motion state is different from a previous motion state (see para [0024]); and modifying one or more settings of the application if the current motion state is different from the previous motion state (see para [0040]).

Regarding claim 12, Wulff discloses the computer readable storage medium of claim 7. Wulff further discloses identifying notification criteria associated with the application (see para [0026] -- 'threshold value'); and notifying the application of the current motion state when the identified notification criteria are satisfied (see para [0026]).

Regarding claim 13, Wulff discloses an electronic device, comprising: an application that runs on the electronic device (see para [0043]-[0045]); an inertial sensor to monitor accelerations experienced by the electronic device (see Fig 3 and para [0023]); and a motion state identification system to identify a current motion state based on the accelerations, to determine that the application subscribes to a motion state identification service, and to notify the application of the current motion state (see para [0024], [0027], [0043]-[0045]).

Regarding claim 14, Wulff discloses the electronic device of claim 13. Wulff further discloses the motion state identification system to determine whether the current motion state is different from a previous motion state (see para [0024]), and to cause the electronic device to modify one or more settings of the application if the current motion state is different from the previous motion state (see para [0040]).

Regarding claim 19, Wulff discloses the electronic device of claim 13. Wulff further discloses the motion state identification system to identify notification criteria associated with the application (see para [0026] -- 'threshold value'), and to notify the application of the current motion state when the identified notification criteria are satisfied (see para [0026]).

-- Continued --

Supplemental Box

In case the space in any of the preceding boxes is not sufficient.
Continuation of:
Box No. V-2. Citations and explanations:

Claims 3, 4, 9, 10, 15, and 16 lack an inventive step under PCT Article 33(3) as being obvious over Wulff in view of US 2006/0223547 A1 to Chin et al. (hereinafter 'Chin').

Regarding claim 3, Wulff discloses the method of claim 1. Wulff further discloses wherein the current motion state is one of a plurality of potential motion states (see para [0022] -- 'prerecorded motions'). Wulff does not disclose determining a confidence rating for the current motion state that indicates a probability that the current motion state corresponds to an actual motion state of a present user of the electronic device. However, Chin discloses determining a confidence rating for the current motion state that indicates a probability that the current motion state corresponds to an actual motion state of a present user of the electronic device (see para [0065] -- 'statistical calculator to determine the likelihood of environmental condition'). It would have been obvious to one skilled in the art to combine the method of Wulff with the confidence rating of Chin, because Wulff and Chin are directed to system and method for devices with motion sensors (see abstracts). Furthermore, users benefit from methods that include confidence rating, because such methods facilitate detection of 'directional orientation and a motion' (see Wulff para [0005]).

Regarding claim 4, Wulff discloses the method of claim 1. Wulff further discloses identifying a plurality of potential current motion states (see para [0022] -- 'prerecorded motions'). Wulff does not disclose identifying confidence ratings for each of the identified potential current motion states. However, Chin discloses identifying confidence ratings for each of the identified potential current motion states (see para [0065] -- 'statistical calculator to determine the likelihood of environmental condition'). It would have been obvious to one skilled in the art to combine the method of Wulff with the confidence rating of Chin, because Wulff and Chin are directed to system and method for devices with motion sensors (see abstracts). Furthermore, users benefit from methods that include confidence rating, because such methods facilitate detection of device's 'directional orientation and a motion' (see Wulff para [0005]).

Regarding claim 9, Wulff discloses the computer readable storage medium of claim 7. Wulff further discloses wherein the current motion state is one of a plurality of potential motion states (see para [0022] -- 'prerecorded motions'). Wulff does not disclose determining a confidence rating for the current motion state that indicates a probability that the current motion state corresponds to an actual motion state of a present user of the electronic device. However, Chin discloses determining a confidence rating for the current motion state that indicates a probability that the current motion state corresponds to an actual motion state of a present user of the electronic device (see para [0065] -- 'statistical calculator to determine the likelihood of environmental condition'). It would have been obvious to one skilled in the art to combine the method of Wulff with the confidence rating of Chin, because Wulff and Chin are directed to system and method for devices with motion sensors (see abstracts). Furthermore, users benefit from methods that include confidence rating, because such methods facilitate detection of 'directional orientation and a motion' (see Wulff para [0005]).

Regarding claim 10, Wulff discloses the computer readable storage medium of claim 7. Wulff further discloses identifying a plurality of potential current motion states (see para [0022] -- 'prerecorded motions'). Wulff does not disclose identifying confidence ratings for each of the identified potential current motion states. However, Chin discloses identifying confidence ratings for each of the identified potential current motion states (see para [0065] -- 'statistical calculator to determine the likelihood of environmental condition'). It would have been obvious to one skilled in the art to combine the method of Wulff with the confidence rating of Chin, because Wulff and Chin are directed to system and method for devices with motion sensors (see abstracts). Furthermore, users benefit from methods that include confidence rating, because such methods facilitate detection of 'directional orientation and a motion' (see Wulff para [0005]).

Regarding claim 15, Wulff discloses the electronic device of claim 13. Wulff further discloses wherein the current motion state is one of a plurality of potential motion states (see para [0022] -- 'prerecorded motions'). Wulff does not disclose the motion state identification system to determine a confidence rating for the current motion state that indicates a probability that the current motion state corresponds to an actual motion state of a present user of the electronic device. However, Chin discloses the motion state identification system to determine a confidence rating for the current motion state that indicates a probability that the current motion state corresponds to an actual motion state of a present user of the electronic device (see para [0065] -- 'statistical calculator to determine the likelihood of environmental condition'). It would have been obvious to one skilled in the art to combine the method of Wulff with the confidence rating of Chin, because Wulff and Chin are directed to system and method for devices with motion sensors (see abstracts). Furthermore, users benefit from methods that include confidence rating, because such methods facilitate detection of 'directional orientation and a motion' (see Wulff para [0005]).

Regarding claim 16, Wulff discloses the electronic device of claim 13. Wulff further discloses the motion state identification system to identify a plurality of potential current motion states (see para [0022] -- 'prerecorded motions'). Wulff does not disclose identify confidence ratings for each of the identified potential current motion states. However, Chin discloses identify confidence ratings for each of the identified potential current motion states (see para [0065] -- 'statistical calculator to determine the likelihood of environmental condition'). It would have been obvious to one skilled in the art to combine the method of Wulff with the confidence rating of Chin, because Wulff and Chin are directed to system and method for devices with motion sensors (see abstracts). Furthermore, users benefit from methods that include confidence rating, because such methods facilitate detection of 'directional orientation and a motion' (see Wulff para [0005]).

-- Continued --

Supplemental Box

In case **the space in any of the preceding boxes is not sufficient.**

Continuation of:
Box No. V-2. Citations and explanations:

Claims 5, 11, 17, and 18 lack an inventive step under PCT Article 33(3) as being obvious over Wulff in view of US 7,200,517 B2 to Darley et al. (hereinafter 'Darley').

Regarding claim 5, Wulff discloses the method of claim 1. Wulff further discloses identifying specific additional motion information the application is configured to receive (see para [0042]-[0045] -- different applications using different motion); and sending the specific additional motion information to the application (see para [0042]-[0045] -- 'additional trigger'). Wulff does not disclose determining additional motion information from the acceleration measurements, the additional motion information including at least one of a user's current cadence, the user's current rolling averages of accelerations, a current dominant axis, and counted periodic human motion counts. However, Darley discloses determining additional motion information from the acceleration measurements, the additional motion information including at least one of a user's current cadence, the user's current rolling averages of accelerations, a current dominant axis, and counted periodic human motion counts (see Fig 7 and col 72, ln 45-50). It would have been obvious to one skilled in the art to combine the method of Wulff with the additional motion information of Darley, because Wulff and Darley are directed to system and method for devices with motion sensors (see abstracts). Furthermore, users benefit from methods that include additional motion information, because such methods facilitate detection of device's 'directional orientation and a motion' (see Wulff para [0005]).

Regarding claim 11, Wulff discloses the computer readable storage medium of claim 7. Wulff further discloses identifying specific additional motion information the application is configured to receive (see para [0042]-[0045] -- different applications using different motion); and sending the specific additional motion information to the application (see para [0042]-[0045] -- 'additional trigger'). Wulff does not disclose determining additional motion information from the acceleration measurements, the additional motion information including at least one of a user's current cadence, the user's current rolling averages of accelerations, a current dominant axis, and counted periodic human motion counts. However, Darley discloses determining additional motion information from the acceleration measurements, the additional motion information including at least one of a user's current cadence, the user's current rolling averages of accelerations, a current dominant axis, and counted periodic human motion counts (see Fig 7 and col 72, ln 45-50). It would have been obvious to one skilled in the art to combine the method of Wulff with the additional motion information of Darley, because Wulff and Darley are directed to system and method for devices with motion sensors (see abstracts). Furthermore, users benefit from methods that include additional motion information, because such methods facilitate detection of device's 'directional orientation and a motion' (see Wulff para [0005]).

Regarding claim 17, Wulff discloses the electronic device of claim 13. Wulff does not disclose the motion state identification system to determine additional motion information from the acceleration measurements, the additional motion information including at least one of a user's current cadence, the user's current rolling averages of accelerations, a current dominant axis, and counted periodic human motion counts. However, Darley discloses the motion state identification system to determine additional motion information from the acceleration measurements, the additional motion information including at least one of a user's current cadence, the user's current rolling averages of accelerations, a current dominant axis, and counted periodic human motion counts (see Fig 7 and col 72, ln 45-50). It would have been obvious to one skilled in the art to combine the method of Wulff with the additional motion information of Darley, because Wulff and Darley are directed to system and method for devices with motion sensors (see abstracts). Furthermore, users benefit from methods that include additional motion information, because such methods facilitate detection of device's 'directional orientation and a motion' (see Wulff para [0005]).

Regarding claim 18, Wulff and Darley discloses the electronic device of claim 17. Wulff further discloses the motion state identification system to identify specific additional motion information the application is configured to receive (see para [0042]-[0045] -- different applications using different motion), and to send the specific additional motion information to the application (see para [0042]-[0045] -- 'additional trigger').

Claims 1-19 have industrial applicability as defined by PCT Article 33(4), because the subject matter can be made or used in industry.

Patent

UNITED STATES UTILITY PATENT APPLICATION

FOR

HUMAN ACTIVITY MONITORING DEVICE

INVENTORS:

PHILIPPE KAHN
ARTHUR KINSOLVING
MARK ANDREW CHRISTENSEN
BRIAN Y LEE
DAVID VOGEL

PREPARED BY:

BLAKELY, SOKOLOFF, TAYLOR & ZAFMAN LLP
1279 OAKMEAD PARKWAY
SUNNYVALE, CALIFORNIA 94085-4040

(408) 720-8300

ATTORNEY'S DOCKET NO. 8689P027C2

CERTIFICATE OF TRANSMISSION
I hereby certify that this correspondence is being submitted electronically via EFS Web on the date shown below.

/Judith Szepesi/ January 31, 2011
Judith A. Szepesi ***Date***

HUMAN ACTIVITY MONITORING DEVICE

[0001] The present patent application is a continuation of U.S. Application No. 12/694,135, filed on January 26, 2010, now U.S. Patent No. 7,881,902, to issue on February 1, 2011; which is a continuation of U.S. Application No. 11/644,455, filed on December 22, 2006, now U.S. Patent No. 7,653,508, issued on January 26, 2010.

FIELD OF THE INVENTION

[0002] This invention relates to a method of monitoring human activity, and more particularly to counting periodic human motions such as steps.

BACKGROUND

[0003] The development of Micro-Electro-Mechanical Systems (MEMS) technology has enabled manufacturers to produce inertial sensors (e.g., accelerometers) of sufficient size, cost, and power consumption to fit into portable electronic devices. Such inertial sensors can be found in a limited number of commercial electronic devices such as cellular phones, portable music players, pedometers, game controllers, and portable computers.

[0004] Step counting devices are used to monitor an individual's daily activity by keeping track of the number of steps that he or she takes. Generally, step counting devices that utilize an inertial sensor to measure motion to detect steps require the user to first position the device in a limited set of orientations. In some devices, the required orientations are dictated to the user by the device. In other devices, the beginning orientation is not critical, so long as this orientation can be maintained.

[0005] Step counting devices are often confused by motion noise experienced by the device throughout a user's daily routine. This noise causes false steps to be measured and actual steps to be missed in conventional step counting devices. Conventional step counting devices also fail to accurately measure steps for individuals who walk at a slow pace. Such step counting devices can fail to operate for seniors and others walking at a slow pace.

BRIEF DESCRIPTION OF THE DRAWINGS

[0006] The present invention is illustrated by way of example, and not by way of limitation, and can be more fully understood with reference to the following detailed description when considered in connection with the following figures:

[0007] **Figure 1** is a block diagram illustrating one embodiment of an electronic device;

[0008] **Figure 2** illustrates an exemplary cadence of motion graph that measures time versus acceleration, in accordance with one embodiment of the present invention;

[0009] **Figure 3** shows a state diagram for the behavior of a system of monitoring human activity using an inertial sensor, in accordance with one embodiment of the present invention;

[0010] **Figure 4** illustrates a flow diagram for a method of operating an electronic device in sleep mode, in accordance with one embodiment of the present invention;

[0011] **Figure 5** illustrates a flow diagram for a method of operating an electronic device in entry mode, in accordance with one embodiment of the present invention;

[0012] **Figure 6** illustrates a flow diagram for a method of operating an electronic device in stepping mode, in accordance with one embodiment of the present invention;

[0013] **Figure 7** illustrates a flow diagram for a method of operating an electronic device in exit mode, in accordance with one embodiment of the present invention;

[0014] **Figure 8** illustrates a flow diagram for a method of recognizing a step in accordance with one embodiment of the present invention, in accordance with one embodiment of the present invention; and

[0015] **Figure 9** illustrates a flow diagram for a method of orienting an inertial sensor, in accordance with one embodiment of the present invention.

DETAILED DESCRIPTION

[0016] Embodiments of the present invention are designed to monitor human activity using an inertial sensor. In one embodiment, a dominant axis is assigned after determining an orientation of an inertial sensor. The orientation of the inertial sensor is continuously determined, and the dominant axis is updated as the orientation of the inertial sensor changes. In one embodiment, periodic human motions are counted by monitoring accelerations relative to the dominant axis.

[0017] **Figure 1** is a block diagram illustrating an electronic device 100, in accordance with one embodiment of the present invention. The electronic device 100 in one embodiment comprises an acceleration measuring logic 105, a filter 120, a dominant axis logic 127, a step counting logic 130, a timer 170, and a final step count 175. In one embodiment, the electronic device 100 is a portable electronic device that includes one or more inertial sensors. The inertial sensors may measure accelerations along a single axis or multiple axes. The inertial sensors may measure linear as well as rotational (angular) accelerations. The electronic device 100 may be used to count steps or other periodic human motions. Steps may be accurately counted regardless of the placement and/or orientation of the device on a user. Steps may be accurately counted whether the electronic device 100 maintains a fixed orientation or changes orientation during operation. The electronic device 100 may be carried in a backpack, pocket, purse, hand, or elsewhere, and accurate steps may still be counted.

[0018] The acceleration measuring logic 105 measures acceleration data at a sampling rate. The sampling rate may be fixed or variable. In one embodiment, the acceleration measuring logic 105 receives a timing signal from the timer 170 in order to

take measurements at the sampling rate. The acceleration measuring logic 105 may be an inertial sensor.

[0019] In one embodiment, measurement data is processed by the filter 120 to remove noise. The filter 120 may be implemented in hardware, software, or both hardware and software. The filter 120 may include a high pass filter, a low pass filter, a bandpass filter, a bandstop filter and/or additional filters. The filter 120 may include a digital filter and/or an analog filter. In one embodiment, a hardware digital filter includes at least one of a finite impulse response (FIR) filter and an infinite impulse response (IIR) filter. In one embodiment, an N-tap hardware digital FIR filter is used. The use of a hardware FIR filter may reduce power consumption by reducing and/or eliminating software digital filtering.

[0020] In one embodiment, the filter 120 includes multiple filters, and a determination of which filters to apply to the measurement data is made based upon an operating mode of the electronic device 100. In one embodiment, the selection of which filters to use is determined by the type of user activity detected. For example, a low pass filter may be used to remove high frequency noise that would interfere with step counting when a user is walking. In contrast, a high pass filter may be used when quick motions are to be monitored.

[0021] Filtered measurement data may be passed on to the dominant axis logic 127 and the step counting logic 130. In one embodiment, the dominant axis logic 127 includes a cadence logic 132, a rolling average logic 135, and a dominant axis setting logic 140. In an alternative embodiment, more or fewer logics may be used to determine a dominant axis. One embodiment of implementing dominant axis assignment may be found in U.S. Serial No. 11/603,472, now issued as U.S. Patent No.

7,457,719 which is incorporated herein by reference. Alternative means of identifying a dominant axis may be used in other embodiments.

[0022] In one embodiment, the dominant axis logic 127 is used to determine an orientation of the electronic device 100 and/or an inertial sensor within the electronic device 100. In alternative embodiments, other logics may be used to determine an orientation of the electronic device 100.

[0023] Referring to **Figure 1**, the cadence logic 132 may determine one or more sample periods to be used by the rolling average logic 135, and may determine a cadence window 150 to be used by the step counting logic 130. In one embodiment, the cadence logic 135 detects a period and/or cadence of a motion cycle. The period and/or cadence of the motion cycle may be based upon user activity (e.g. rollerblading, biking, running, walking, etc).

[0024] Many types of motions that are useful to keep track of have a periodic set of movements. Specific periodic human motions may be characteristic of different types of user activity. For example, to walk, an individual must lift a first leg, move it forward, plant it, then repeat the same series of motions with a second leg. In contrast, a person rollerblading performs a repeated sequence of pushing, coasting and liftoff for each leg. For a particular individual, the series of walking motions will usually occur in about the same amount of time, and the series of rollerblading motions will usually occur in the same amount of time. The repeated set of motions can be considered a unit, and defines the motion cycle. The amount of time that it takes to complete one motion cycle defines the motion cycle's period, and the number of motion cycles that occur in a given unit of time define the motion cycle's cadence. For simplicity, the term "step" is used in this application to describe the user activity being evaluated. However,

in the context of this application, the term "step" should be taken to mean any user activity having a periodic set of repeated movements.

[0025] **Figure 2** illustrates an exemplary motion cycle graph 201 that measures time versus acceleration, in accordance with one embodiment of the present invention. The exemplary motion-cycle graph 201 shows acceleration data taken with a single tri-axis inertial senor. The acceleration at a given period of time is represented for a first axis 203, a second axis 205, and a third axis 207. In one embodiment, the cadence logic 135 of **Figure 1** analyzes the acceleration along the first axis 203, second axis 205 and third axis 207 to detect a motion cycle. Once a motion cycle is detected, a period of the motion cycle is determined, and a cadence of the motion cycle is determined. **Figure 2** shows an exemplary period of a motion cycle 210 for the third axis 207, the period being approximately 0.6 seconds. The same period can also be seen to a lesser degree in the second axis 205 and the first axis 203. The corresponding cadence to the motion cycle is approximately one hundred motion cycles per minute.

[0026] In one embodiment, once a stepping period (or other motion cycle period) is determined, that period may be used to set the cadence window (the allowable time window for steps to occur). In one embodiment, the period is updated after each step. The current stepping period may be a rolling average of the stepping periods over previous steps, as discussed in more detail with reference to the rolling average logic 135 of **Figure 1**.

[0027] A cadence window may be used to facilitate accurate measurement of a step, or other periodic human motion. A cadence window is a window of time since a last step was counted that is looked at to detect a new step. A cadence window may be

set based on the period and/or cadence of the actual motion cycle (e.g., a stepping period), on set limits, and/or on other determiners.

[0028] Referring to **Figure 2**, an exemplary first cadence window 240 and second cadence window 255 are shown. The first cadence window 240 may be defined by a first cadence window minimum 230 and a first cadence window maximum 235. The second cadence window 255 may be defined by a second cadence window minimum 245 and a second cadence window maximum 250. In one embodiment, the cadence window minimums 230 and 245 and cadence window maximums 235 and 250 are determined by measuring lengths of time since the most recent step was counted. In one embodiment, this length of time is measured via the timer 170 of **Figure 1**. In other embodiments, other variables may be used to set the cadence window. For example, cadence windows may be determined by measuring cumulative amounts of acceleration that have been measured since the previous step was counted.

[0029] Returning to **Figure 2**, cadence windows may be used to count steps until an expected step is not encountered. In one embodiment, new cadence windows are determined periodically. In one embodiment, the cadence window is a dynamic cadence window that continuously updates as a user's cadence changes. For example, using a dynamic cadence window, a new cadence window length may be set after each step. (. The cadence window minimums may be determined by subtracting a value from the stepping period, and the cadence window maximums may be determined by adding a value to the stepping period. In one embodiment, the cadence window maximums are preset, and the cadence window minimums are updated after each step is counted. In one embodiment, the cadence window minimums are preset, and the cadence window maximums are updated after each step is counted. In one

embodiment, both the cadence window minimums and cadence window maximums are updated when a step is counted. In one embodiment, the current cadence window minimum is determined by subtracting 200 ms from the current stepping cadence period. In one embodiment, the cadence window minimum has a minimum value of 240 ms.

[0030] In the illustrated embodiment of **Figure 2**, a first step 217 is counted at 0.65 seconds, and a second step 232 is counted at approximately 1.15 seconds. The first cadence window 240 opens at approximately 0.4 seconds from the first step 217, and closes at approximately 0.8 seconds from the first step 217. As shown, the second step 232 falls within the first dynamic cadence window 240. A third step 233 falls within the second dynamic cadence window 255, which may have a second cadence window minimum 245 and second cadence window maximum 250 that are different from the first cadence window minimum 230 and first cadence window maximum 235. The illustrated second cadence window minimum is about 0.35 seconds from the second step 232, and the second cadence window maximum 250 is about 0.75 seconds from the second step 232. Other cadence window minimums and maximums are also possible. When motion criteria (e.g., threshold conditions) are met within a cadence window, a step is detected, whereas when motion criteria are met outside of the cadence windows no step is detected.

[0031] If no previous steps have been detected, there is no cadence minimum, and a step may be detected at any time that motion criteria are met. If fewer than the required number of steps to determine a dynamic cadence window have been detected, then the cadence window may have a default minimum and maximum value. In one embodiment, the cadence window has a default minimum of around 325 ms and

a default maximum of around 1000 ms. Once enough steps have been detected to determine a dynamic stepping cadence or period, the cadence window may be set to the determined stepping period plus or minus an error factor. In one embodiment, a count of between about two to about ten periodic human motions is sufficient to set a dynamic cadence window.

[0032] The cadence of any periodic human motion will generally not change more than a certain amount in a given time period. In one embodiment, the cadence window may be sufficiently wide to continue counting periodic human motions even when a stepping cadence changes. In one embodiment, the cadence window is narrower, and steps may not be counted when a stepping cadence changes. So as not to miss steps, once a new stepping cadence is detected, previous measurements may be examined to determine whether they register as steps under the new stepping cadence and a new cadence window. Therefore, steps may be counted even if they did not occur in the original cadence window. The cadence window may update dynamically to a user's actual cadence. Human cadences change within a known window of rates, and so steps can be differentiated from other noise. This may ameliorate and/or eliminate missed step counts due to changes in cadence.

[0033] In one embodiment, when steps repeatedly occur at a time different from the current stepping period, a new stepping period and a new cadence window are set. For example, when the stepping period is 0.7 seconds, and a step occurs about every 0.6 seconds enough times in a row, then the stepping period is changed to 0.6 seconds and a new cadence window is set based on the changed stepping period.

[0034] Returning to **Figure 1**, once the stepping period is detected, the cadence logic 132 may set one or more sample periods for the rolling average logic 135

to use based upon the stepping period. In one embodiment, the sample period(s) are set such that at least one sample period is approximately the length of, or longer than, the stepping period. In one embodiment, a sample period is set such that it is a multiple of the stepping period.

[0035] The rolling average logic 135 creates one or more rolling averages of accelerations as measured by the inertial sensor(s) over the sample period(s) set by the cadence logic 132. The rolling averages of accelerations may be used for determining an orientation of the electronic device, for determining thresholds to compare acceleration measurements against, and/or for other purposes. In one embodiment, the rolling average logic 135 creates a rolling average of accelerations for determining an orientation of the electronic device 100, the rolling average having a period that is at least the stepping period. In one embodiment, the rolling average logic creates a rolling average of accelerations for determining a lower threshold to compare acceleration measurements against, the rolling average having a sample period that is at least twice the stepping period.

[0036] The rolling average logic 135 may create one or more rolling averages of data other than accelerations. In one embodiment, the rolling average logic 135 creates a rolling average of stepping periods, where the rolling average is the rolling average time between steps. In one embodiment, the rolling average of stepping periods is calculated over the past four counted steps. The rolling average of the stepping periods may be used by the cadence logic 132 to determine a cadence window and a current stepping cadence.

[0037] In one embodiment, rolling averages may be maintained in registries that keep track of rolling average values and the number of samples that were used to

calculate current rolling average values. When a new measurement is taken, it can be incorporated into the previous rolling average value, and the registry can than be updated with a new rolling average value. Alternatively, the rolling averages may be maintained by buffering the measurements used to calculate the rolling averages. As the buffers fill, oldest measurement data can be discarded and replaced by new measurement data. The measurements in the buffer can be averaged after each measurement to determine a new rolling average.

[0038] In one embodiment, the dominant axis setting logic 140 determines an orientation of the electronic device 100 and/or the inertial sensor(s) within the electronic device 100. The orientation may be determined based upon the rolling averages of accelerations created by the rolling average logic 135. In one embodiment, once the orientation is determined, a dominant axis is assigned based upon the orientation. Determining an orientation of the electronic device 100 may include identifying a gravitational influence. The axis with the largest absolute rolling average may be the axis most influenced by gravity, which may change over time (e.g. as the electronic device is rotated). Therefore, a new dominant axis may be assigned when the orientation of the electronic device 100 and/or the inertial sensor(s) attached to or embedded in the electronic device 100 changes.

[0039] In one embodiment, the actual axis with the largest absolute rolling average over the sample period is assigned as the dominant axis. In alternative embodiments, the dominant axis does not correspond to one of the actual axes of the inertial sensor(s) in a current orientation, but rather to an axis that is defined as approximately aligned to gravity. In one embodiment, the dominant axis corresponds to a virtual axis that is a component of a virtual coordinate system. In one embodiment,

the dominant axis setting logic 140 assigns the dominant axis by performing a true gravity assessment, such as by doing trigonometric calculations on the actual axes based on the gravitational influence. In one embodiment, the dominant axis setting logic 140 assigns the dominant axis by comparing the gravitational influence to a data structure such as a lookup table, associative array, hash table, adjacency matrix, etc.

[0040] Returning to **Figure 1**, the step counting logic 130 may include a measurement selection logic 145, a cadence window 150, a measurement comparator 155, a threshold comparator 160, a step count buffer 165, and a mode logic 190. The measurement selection logic 145 may determine which measurements from the measurement buffer 125 to use to determine if a step has occurred. In one embodiment, the measurement selection logic 145 may monitor accelerations relative to the dominant axis, and select only those measurements with specific relations to the dominant axis for measurement. For example, only accelerations that are approximately parallel to the dominant axis may be selected, or alternatively, only accelerations that are approximately perpendicular to the dominant axis may be selected. In one embodiment, the measurement selection logic 145 selects only measurements of acceleration data along the dominant axis. In alternative embodiments, measurements of acceleration data along other axes may also be used. In one embodiment, measurements of acceleration along only the other axes are used.

[0041] Selected measurements may be forwarded to the measurement comparator 155 and the threshold comparator 160 to determine whether a step has occurred. The measurement comparator 155 may compare a current measurement to previous measurements. Based on this comparison, a current measurement may

qualify as a step if it has met certain comparison criteria, as discussed in more detail with reference to **Figure 8**.

[0042] In one embodiment, a motion cycle graph is maintained, and the current measurement is compared to the motion cycle graph. If the motion cycle graph indicates that the current measurement in relation to preceding measurements fits the profile of a step, then a step may be counted. Otherwise a step may not be counted.

[0043] Returning to **Figure 1**, the threshold comparator 160 disqualifies measurements from being counted as steps for failure to meet certain thresholds. In one embodiment, measurements must be larger than a lower threshold to qualify as a step. In one embodiment, the threshold comparator 160 compares measurements to an upper threshold. In one embodiment, only a measurement having a smaller absolute value of acceleration than the upper threshold and a higher absolute value than the lower threshold is counted as a step. The upper threshold and the lower threshold are discussed in more detail below with reference to **Figure 8**.

[0044] In one embodiment, the threshold comparator 160 and the measurement comparator 155 are combined into a single comparator. In one embodiment, other comparators may be used, such as a curve fitting comparator or a slope comparator.

[0045] The step count buffer 165 keeps track of probable steps. The exact behavior of the step count buffer 165 depends on which operating mode the electronic device 100 is in. In one embodiment, the operating mode that the electronic device is in is determined by the mode logic 190. In the illustrated embodiment, the mode logic 190 is a component of the step counting logic 130. In an alternative embodiment, the mode logic 190 is a separate logic from the step counting logic 130. In one

embodiment, operating modes include a non-active mode, in which periodic human motions are buffered, and an active mode, in which periodic human motions are counted. In one embodiment, operating modes include a sleep mode, a step counting mode, an entry mode, and an exit mode. Operating modes are discussed in greater detail below in reference to **Figure 3**.

[0046] Returning to **Figure 1**, when the threshold comparator 160 and measurement comparator 155 both indicate that a measurement is a step, then the step count buffer 165 is incremented by one. Depending on the mode, when the step count buffer 165 reaches a certain amount, the step count buffer 165 is emptied and the final count 175 is incremented by the amount of steps that were in the step count buffer 165. The number of steps that must be counted by the step count buffer 165 before they register as actual steps may vary from one to ten or more, depending on the current operating mode. The final step count 175 keeps track of the total number of steps that have occurred. In one embodiment, this data is transmitted to a server or remote database.

[0047] **Figure 3** shows a state diagram for the behavior 300 of a system for monitoring human activity, in accordance with one embodiment of the present invention. The system may have multiple operating modes (states) that are navigated between by processing logic that may comprise hardware (e.g., circuitry, dedicated logic, programmable logic, microcode, etc.), software (such as instructions run on a processing device), or a combination thereof. In one embodiment, behavior 300 is the behavior of the electronic device 100 of **Figure 1**.

[0048] The behavior 300 may include four operating modes for monitoring human activity: a sleep mode, an entry mode, a stepping mode, and an exit mode. In

alternative embodiments, a different number of modes may be used. In one embodiment, only two modes are used: active mode and non-active mode. The active mode is entered once continuous steps within the cadence window have been identified, while the non-active mode is used for all other states. In alternative embodiments, multiple inactive modes and/or active modes are used. To navigate between modes, certain conditions must be met. The conditions may include exit conditions for terminating an active mode and entry conditions for initiating inactive modes. Each mode may have different exit and entry conditions.

[0049] Use of different conditions for different operating modes increases the reliability of the device that is monitoring the human activity. For example, once an object (e.g., a person) is moving, they are more likely to remain moving than to stop. Likewise, if a person is not moving, they are more likely not to move than to begin moving. These principles can be applied by requiring more stringent conditions to be met for a device to initiate a walking (stepping) mode than to continue the walking mode. The different modes may each have rules that reflect what is more likely to happen for subsequent measurements. This may reduce or eliminate the number of uncounted steps and/or false step counts.

[0050] Referring to **Figure 3**, modes 300 in one embodiment include a sleep mode 305, an entry mode 315, a stepping mode 325, and an exit mode 335. In one embodiment, the power level of the system or device is linked to these modes.

[0051] The first mode initiated is the sleep mode 305. When no activity (acceleration) is detected, the system remains in sleep mode 305. When acceleration is detected, an entry mode 315 is initiated.

[0052] Once in entry mode 315, acceleration may be monitored to detect steps. When N steps are detected in appropriate cadence windows, a stepping mode 325 is initiated. If N steps are not detected within a period of time, sleep mode is reinitiated. In one embodiment, sleep mode is only initiated if no motion is detected.

[0053] Once in stepping mode 325, acceleration data is monitored to count steps according to a predefined set of rules or motion criteria. According to one of these criteria, steps are expected to occur within a set interval (e.g., within a cadence window). When a step is counted within the set interval, then the stepping mode 325 is continued. When a step is not detected within the set interval, an expected step has not occurred, and an exit mode 335 is initiated.

[0054] In exit mode 335, processing logic determines whether a predetermined number of steps (X) are detected at a particular cadence. The predetermined number of steps X may be the same as, or different from, the number of steps N. When X steps are detected in a cadence, stepping mode 325 is reinitiated. When X steps are not detected within a period of time, entry mode 315 is reinitiated.

[0055] **Figure 4** illustrates a flow diagram for a method 400 of operating an electronic device in sleep mode, in accordance with one embodiment of the present invention. In one embodiment, method 400 corresponds to the sleep mode 305 of **Figure 3**. In one embodiment, the method 400 may begin when no relevant acceleration has been detected for a predetermined time interval, or when no steps have been detected for a predetermined time interval. In one embodiment, when no acceleration above a threshold value is detected for a set period of time, the sleep function is initiated. In another embodiment, when a motion signature indicative of an activity that does not need to be monitored is detected, the sleep function is initiated.

For example, when the motion signature of driving is detected, the sleep function may be initiated. The time period that elapses before the sleep mode is initiated may be a fixed value, or it may be adjusted automatically by processing logic or based on user input (e.g. in response to a user selection of desired battery longevity verses desired performance, or based on the last measured cadence window).

[0056] Referring to **Figure 4**, method 400 begins with setting a sleep mode sampling rate (block 405). In one embodiment, a low sampling rate is set. This reduces power consumption and prolongs battery life. In one embodiment, the sleep mode sampling rate is a fixed value. In alternative embodiments, the sleep mode sampling rate can be modified automatically by processing logic based on certain criteria such as time of day, user behavior patterns, etc., or based on user input.

[0057] In one embodiment, a sampling function is periodically executed in sleep mode, wherein the sampling function samples acceleration data at a set sampling rate for a set time period. For example, the sampling function may be executed every ten seconds for a duration of one second, and a sampling rate of fifty measurements per second may be set for that one second of operation. In one embodiment, the sampling function repeats at a relatively slow rate (e.g., once every 10 seconds), and the sampling rate within the sampling function is relatively high (e.g., 50 Hz). The sampling function may be used to detect unwanted motion signatures, or to maintain a device in low power sleep mode, for example, while a user is driving in a car. .

[0058] In one embodiment, the sleep mode sampling rate is set to zero. The sleep mode may be set to zero, for example, when an inertial sensor has 'inertial wakeup' functionality. Inertial wakeup functionality enables processing logic to switch from sleep mode to entry mode when an acceleration exceeding a set threshold is

detected. The inertial wakeup may be used to simultaneously exit sleep mode and power-up additional functionality.

[0059] At block 410, measurements of acceleration data are taken. At block 415, processing logic determines whether or not relevant acceleration is detected. Relevant acceleration includes acceleration that meets certain relevancy criteria. In one embodiment, the relevancy criteria include a lower threshold and an upper threshold. In alternative embodiments, other relevancy criteria may also be used, such as a requirement that acceleration be continuously measured for a preset time period.

[0060] When no relevant acceleration is detected, or when the 'inertial wakeup' pin has not triggered (for inertial sensors having 'inertial wakeup functionality'), sleep mode continues, and further measurements of acceleration data are taken at the set sleep mode sampling rate (block 410). When acceleration is detected, sleep mode is terminated and entry mode is initiated (block 420). In one embodiment, the acceleration that is detected and its rate of change must meet certain criteria to terminate sleep mode.

[0061] **Figure 5** illustrates a flow diagram for a method 500 of operating an electronic device in entry mode, in accordance with one embodiment of the present invention. In one embodiment, method 500 corresponds to the entry mode 315 of **Figure 3**. The entry mode may be initiated when a user first begins an activity in which steps may be detected. In one embodiment, the method 500 begins when any relevant acceleration is detected. In one embodiment, entry mode is initiated when a measurement of acceleration that meets certain criteria has been detected. In one embodiment, method 500 is initiated when a sleep mode is terminated.

[0062] Referring to **Figure 5**, method 500 begins by setting the sampling rate to a stepping sampling rate (block 504). The stepping sampling rate is set to facilitate accurate measurements of steps, and may be a fixed or a dynamically variable rate. A variable sampling rate may automatically adjust depending on a period of a detected stepping cadence, may be user adjusted, may adjust based on applications being run by processing logic, or by other means. The stepping sampling rate may be set to anywhere between about 10 and about 200 Hz. In one embodiment, the stepping sampling rate is set to about 15 to 40 Hz.

[0063] At block 510, a first step is recognized. Since no previous steps have been measured, and there is no cadence window, the first step may be recognized at any time. Once a first step is recognized, a default cadence window is set (block 514). The default cadence window may have a minimum and maximum such that steps will be counted for most or all possible stepping cadences, whether a user is walking slowly or sprinting. In one embodiment, the default cadence window has a minimum of around 325 ms and a maximum of around 1000 ms.

[0064] In one embodiment, an initial default value is set wide enough to accommodate all users, and is then dynamically adjusted to match the specific user in question. Processing logic may 'learn' (adapt to) a particular user, and may become more accurate as steps are counted. Processing logic that has the ability to learn or adapt to different users may create an individualized profile for each user. Multiple profiles may also be created for each user, the different profiles reflecting different user activity. For example, a first profile might be created for a user's running and a second profile may be created for a user's walking. Processing logic may switch between different profiles automatically, or manually based on user input. In one embodiment,

processing logic compares a current cadence and/or motion cycle pattern to stored profiles. When a current cadence or motion cycle pattern matches that of a stored profile, that profile is activated.

[0065] At block 520, a buffered step count is set to one. At block 524, processing logic determines whether an additional step is recognized. An additional step may be recognized if a particular measurement of acceleration meets all the necessary criteria. One embodiment of these criteria is discussed below with reference to **Figure 8**.

[0066] Returning to **Figure 5**, if an additional step is recognized, method 500 continues to block 560. If no additional steps are recognized, then processing logic determines whether the time is still within the cadence window (block 530). If there is still time within the cadence window, the process returns to block 524. If the cadence window has closed, then the buffered step count is reset to zero (block 534). The process then continues to block 540.

[0067] At block 540, processing logic determines whether any relevant acceleration is detected. If no relevant acceleration is detected, then sleep mode is initiated (block 544). If some relevant acceleration is detected, then processing logic returns to block 510 to await recognition of another first step. If at block 540 an additional step was recognized, the process continues to block 560.

[0068] At block 560, an additional step is added to the buffered step count. Processing logic then checks whether there are M counts in the buffered step count (block 564). In one embodiment, M is an integer value between about 4 and 10. If there are not at least M steps in the buffered step count, then the process returns to block 524.

[0069] If the buffered step count is equal to or greater than M, then the processing logic checks whether the cadence window is set to the default (block 570). If the cadence window is still set to the default, then a new cadence window is set (block 574) based on a stepping cadence of the M steps measured. The process then returns to block 524. If the cadence window is not set to the default, then processing logic continues to block 580. In an alternative embodiment, once there are M steps in the buffered step count, the cadence window may be adjusted for each additional step that is recognized.

[0070] At block 580, processing logic checks whether there are N steps in the buffered step count (block 580), where N may be an integer value greater than M. When there are not yet N steps in the buffered step count, the process returns to block 524 to continue in entry mode. When the number of steps in the buffered step count reaches N, the buffered steps are added to an actual or final step count, and a stepping mode is entered into (block 584).

[0071] **Figure 6** illustrates a flow diagram for a method 600 of operating an electronic device in stepping mode, in accordance with one embodiment of the present invention. In one embodiment, method 600 corresponds to the stepping mode 325 of **Figure 3**. The stepping mode may be initiated when a user has been walking long enough for a buffered step count to fill. In one embodiment, method 600 is initiated when an entry mode is terminated, and/or when an exit mode is terminated.

[0072] Referring to **Figure 6**, method 600 begins by setting a cadence window (block 610). The cadence window may be set based on previous measurement data. In one embodiment, the cadence window is set based on a rolling average of stepping periods. In one embodiment, the cadence window may be identical to the

cadence window used during entry mode. Once the cadence window is set, measurement data is checked to determine whether an additional step is recognized (block 615). If an additional step is recognized, then it is added to the final or actual step count (block 620). If no additional step is recognized, then processing logic determines whether the current measurement was taken within the cadence window (block 625). If the cadence window has not elapsed, the process returns to block 615. If the cadence window has elapsed, then an expected step was not counted, and an exit mode is initiated (block 630).

[0073] **Figure 7** illustrates a flow diagram for a method 700 of operating an electronic device in exit mode, in accordance with one embodiment of the present invention. In one embodiment, method 700 corresponds to the exit mode 335 of **Figure 3**. The exit mode may be entered into when an expected step is not identified in stepping mode.

[0074] In one embodiment, the requirement(s) for changing from exit mode to stepping mode are less strict than the requirement(s) for switching from entry mode to stepping mode. Processing logic may assume that when a user has recently taken a step, the user is most likely to take another step. Processing logic may also assume that if a user has not just taken a step, it is most likely that they will not take one. These assumptions may be implemented by imposing more stringent requirements to switch from entry mode to stepping mode than to change from exit mode to stepping mode.

[0075] An expected step may not be identified, for example, when a user stops walking, when extraneous movements such as gestures are made that interfere with the step count, or when a device orientation is changed as a step occurs. In one

embodiment, the exit mode assumes that a step has been missed, so that if the exit mode determines that a user is still walking, the originally uncounted step is not missed.

[0076] The process begins by initiating a step timer (block 705). The step timer measures the amount of time that has passed since a step has been identified. In one embodiment, the step timer is a countdown timer that terminates exit mode when the timer reaches zero. In one embodiment, the step timer starts counting when a cadence window minimum is reached, and stops counting when a cadence window maximum is reached. In an alternative embodiment, the step timer starts counting as soon as the exit mode is initiated, and stops counting when a cadence window maximum is reached. In one embodiment, the step timer starts counting at 240 ms from the time that the expected step should have occurred.

[0077] At block 710, a step is added to a buffered step count. At block 715, processing logic determines whether the buffered step count is equal to X, where X of the number of identified steps in exit mode. In one embodiment, X is between 3 and 8. If the buffered step count is equal to X, then the buffered steps are added to the actual step count and stepping mode is reinitiated (block 720). If the buffered step count is not equal to X, then processing logic proceeds to block 725.

[0078] At block 725, processing logic determines whether the step timer has timed out (allotted time has elapsed). In one embodiment, the step timer times out when no steps are counted within a cadence window. In one embodiment, the step timer times out when no steps are counted in two or more cadence windows. If the allotted time has elapsed, then the buffered step count is cleared, and entry mode is initiated (block 730). If the allotted time has not elapsed, then processing logic determines whether an additional step is recognized (block 735). If a step is

recognized, then the step timer is reset (block 705), the buffered step count is incremented by one (block 710), and on the process continues to block 715. If a step is not recognized, then processing logic returns to block 725 to determine whether the step timer has elapsed. In an alternative embodiment, the step timer is not reset when an additional step is recognized, and the buffered step count must reach X in the time initially allotted by the step timer. In that instance, the step timer is set at greater than X times the cadence window.

[0079] **Figure 8** illustrates a flow diagram for a method 800 of recognizing a step, in accordance with one embodiment of the present invention. In one embodiment, method 800 may be executed by blocks 510 and 524 of **Figure 5**, block 615 of **Figure 6** and block 735 of **Figure 7**. In one embodiment, method 800 is performed by electronic device 100 of **Figure 1**.

[0080] Referring to **Figure 8**, method 800 begins with measurements of acceleration data being taken (block 805). Measurements are taken according to a sampling rate, which may vary from about one measurement per second to many measurements a second, depending on the operating mode being used.

[0081] At processing block 810, in one embodiment measurements are filtered. Measurements can be filtered to remove high frequency data and/or low frequency data. In one embodiment, what data to filter depends on the type of user activity detected. At processing block 812, in one embodiment the inertial sensor is oriented by assigning a dominant axis. Assigning a dominant axis may include calculating rolling averages of acceleration and assigning the dominant axis based on the rolling averages of acceleration.

[0082] At block 815, processing logic determines whether a measurement is within a cadence window. If the measurement is not within a cadence window, then no step may be recognized or counted for that measurement (block 840). If the measurement is within the cadence window, the process continues to block 820.

[0083] At block 820, processing logic determines whether acceleration along the dominant axis is greater than a lower threshold. If the measurement is not greater than the lower threshold, no step may be recognized or counted for that measurement (block 840). If the measurement is greater than the lower threshold, the processing logic continues to block 825.

[0084] In one embodiment, the measurement may qualify as a step if it is the first measurement that crosses the lower threshold. In an alternative embodiment, the measurement with the greatest acceleration within a cadence window (e.g. a peak) may be counted as a step.

[0085] The lower threshold may be based on a rolling average of accelerations as determined by the rolling average logic 135 of **Figure 1**. In one embodiment, the rolling average of accelerations that is used to set the lower threshold has a sample period that is about twice the stepping period. In alternative embodiments, other sample periods are used for the rolling average.

[0086] In one embodiment, the lower threshold is set such that an absolute value of a measurement must exceed an absolute value of the rolling average to be counted as a step. Multiple lower thresholds may be set, and a current measurement may be compared to one or more of the lower thresholds depending on operating conditions. For example, a negative lower threshold may be used if acceleration is detected in a negative direction (e.g., when device is upside down), and a positive lower

threshold may be used if acceleration is detected in a positive direction (e.g., device is right-side up). In one embodiment, absolute values may be used.

[0087] In one embodiment, the measurement must exceed the rolling average by a set margin. The margin may be set automatically by processing logic, or it may vary based on the orientation of the electronic device or inertial sensor(s), user input, and/or other criteria.

[0088] In one embodiment, the lower threshold is adjusted based on an orientation of the electronic device and/or an orientation of the inertial sensor(s) within the electronic device. If an axis is closely aligned with gravity, a first threshold may be used. If no axes are closely aligned to gravity, other thresholds may be used. In one embodiment, a variable threshold is used, the variable threshold having a larger value when an axis is closely aligned to gravity, and progressively lower values as an axis most closely aligned with gravity is moved out of line with gravity. The variable threshold can be implemented using a data structure (e.g., a lookup table, hash table, adjacency matrix, etc.), comparison to a virtual axis, or by performing trigonometric calculations.

[0089] At block 825, processing logic determines whether acceleration along the dominant axis is greater than previous measurements. In one embodiment, acceleration along the dominant axis for a present measurement is compared to the previous 1 to 4 measurements.

[0090] In one embodiment, the absolute value of the present measurement is compared to the absolute value of the previous measurement or measurements. By comparing the absolute value of acceleration along the dominant axis to previous absolute value(s) of acceleration, processing logic may determine whether the

acceleration of a user is moving away from the influence of gravity (e.g. whether a person is lifting a foot from the ground rather than planting it on the ground). In one embodiment, a measurement qualifies as a step when it reflects that the acceleration of a user is moving away from gravity. Alternatively, a current measurement may qualify as a step if it has an absolute value that is less than absolute values of the previous measurements, indicating that the acceleration of a user is moving towards gravity.

[0091] If the absolute value of the current measurement is not greater than the absolute values of the measurements compared to, then no step may be recognized or counted for that measurement (block 840). If the absolute value of the measurement is greater than the absolute values of previous measurements, then the process continues to block 830.

[0092] At block 830, processing logic determines whether acceleration for a particular measurement is lower than an upper threshold. In one embodiment, only acceleration along the dominant axis is compared to the upper threshold. In one embodiment, accelerations along all axes are compared to the upper threshold. If the current measurement is not lower than the upper threshold, then no step may be recognized or counted for that measurement (block 840). If the measurement is lower than the upper threshold, then a step may be counted (block 835). The upper threshold may be set to prevent sudden accelerations such as taps from being counted as steps.

[0093] Blocks 815, 820, 825 and 830 show four criteria that may be used to accurately determine whether user has walked or run one step. These criteria may be dynamic motion criteria that are updated continuously as current conditions change (e.g., as an inertial sensor changes orientation, as a user changes cadence, etc.).

Alternatively, these criteria may be static criteria that are preset, or criteria that may be changed through user input.

[0094] As noted above, though embodiments of the present invention are described in reference to steps, the present invention equally applies to other periodic human motions. Other criteria may also be used in addition to, or in place of, those listed above. These criteria may reduce or eliminate the number of false steps counted and/or the number of missed steps. Examples of other criteria include specific rates of change in acceleration between measurements, specific shapes and/or sharpness of acceleration peaks for motion cycles, particular amplitudes of periodic human motions, etc. These and other criteria may be applied to embodiments of the present invention.

[0095] **Figure 9** illustrates a flow diagram for one embodiment of a method 900 of orienting an inertial sensor. In one embodiment, the method 900 is executed by block 812 of **Figure 8**.

[0096] Referring to **Figure 9**, method 900 begins with detecting a stepping period (block 910). In one embodiment, the method 900 may begin by detecting a stepping cadence. At block 915, rolling averages of accelerations are created. The rolling averages of accelerations may be created based on the stepping period (or stepping cadence). In one embodiment, multiple rolling averages of accelerations are created.

[0097] At block 920, a dominant axis is assigned. In one embodiment, the dominant axis is assigned after identifying a gravitational influence. The gravitational influence may be identified by calculating total acceleration based upon the acceleration on each axis. In one embodiment, the percentage of the total acceleration

can then be assigned to each axis and an approximate device orientation can be determined.

[0098] In the foregoing description, numerous specific details have been set forth such as examples of specific systems, languages, components, etc. in order to provide a thorough understanding of the present invention. It will be apparent, however, to one skilled in the art that these specific details need not be employed to practice the present invention. In other instances, well known materials or methods have not been described in detail in order to avoid unnecessarily obscuring the present invention.

[0099] The present invention may be performed by hardware components or may be embodied in machine-executable instructions, which may be used to cause a general-purpose or special-purpose processor programmed with the instructions to perform the method described above. Alternatively, the method may be performed by a combination of hardware and software.

[00100] The present invention may be provided as a computer program product, or software, that may include a machine-readable medium having stored thereon instructions, which may be used to program a computer system (or other electronic devices) to perform a process according to the present invention. The machine-readable medium may include, but is not limited to, floppy diskettes, optical disks, CD-ROMs, and magneto-optical disks, ROMs, RAMs, EPROMs, EEPROMs, magnetic or optical cards, flash memory, or other type of media or machine-readable mediums suitable for storing electronic instructions.

[00101] In the foregoing specification, the invention has been described with reference to specific exemplary embodiments thereof. It will, however, be evident that

various modifications and changes may be made thereto without departing from the broader spirit and scope of the invention as set forth in the appended claims. The specification and drawings are, accordingly, to be regarded in an illustrative rather than a restrictive sense.

CLAIMS

What is claimed is:

1. A method of monitoring human activity using an inertial sensor, comprising:

assigning a dominant axis based on an orientation of the inertial sensor;

detecting a change in the orientation of the inertial sensor and updating the dominant axis based on the change; and

counting periodic human motions by monitoring accelerations relative to the dominant axis.

2. The method of claim 1, further comprising:

using acceleration measurements along only the dominant axis to count steps.

3. The method of claim 1, further comprising:

maintaining a cadence window, wherein the cadence window is updated as an actual cadence changes; and

counting a periodic human motion when an acceleration measurement that meets motion criteria is within the cadence window.

4. The method of claim 3, wherein at least one of the motion criteria is a dynamic motion criterion, the dynamic motion criterion updated to reflect current conditions.

5. The method of claim 4, wherein the dynamic motion criteria includes at least a lower threshold, wherein the lower threshold is adjusted based on at least one of a rolling average of accelerations and the orientation of the inertial sensor.

6. A method of monitoring human activity using an inertial sensor, comprising:

buffering a plurality of periodic human motions;

identifying a number of periodic human motions within appropriate cadence windows; and

counting each of the periodic human motions to enable the monitoring of human activity.

7. The method of claim 6, wherein prior to identifying, the inertial sensor is in a non-active mode, and wherein the non-active mode comprises running the device in one of an exit mode and an entry mode.

8. The method of claim 7, wherein:

a requirement for switching the device from the exit mode to an active mode is lower than a requirement for switching the device from the entry mode to the active mode.

9. The method of claim 6, further comprising:

switching the device from the active mode to the non-active mode when a number of expected periodic human motions are not identified in the appropriate cadence windows.

10. The method of claim 6, further comprising:

switching from a sleep mode to the non-active mode of operation when an acceleration is detected.

11. An inertial sensor based device, comprising:

a dominant axis logic to determine an orientation of a device, to assign a dominant axis, and to update the dominant axis when the orientation of the device changes; and

a counting logic to count periodic human motions by monitoring accelerations relative to the dominant axis.

12. The device of claim 11, wherein:

the counting logic uses acceleration measurements along only the dominant axis to count steps.

13. The device of claim 11, further comprising:

a cadence logic to update a dynamic cadence window; and

the counting logic to count a periodic human motion when an acceleration measurement that meets motion criteria is taken within the cadence window.

14. The device of claim 11, further comprising:

a comparator, to compare measurements of acceleration to dynamic motion criteria, the dynamic motion criteria updated to reflect current conditions; and

the counting logic to count a periodic human motion when the measurements of acceleration satisfy the dynamic motion criteria.

15. A non-transitory machine readable medium containing executable computer program instructions which, when executed by a processing system, cause said system to perform a method for:

assigning a dominant axis based on an orientation of the inertial sensor;

detecting a change in the orientation of the inertial sensor and update the dominant axis based on the change; and

counting periodic human motions by monitoring accelerations relative to the dominant axis.

16. The non-transitory machine readable medium containing executable computer program instructions of claim 15, which, when executed by the processing system, cause said system to perform the method further for:

using acceleration measurements along only the dominant axis to count steps.

17. The non-transitory machine readable medium containing executable computer program instructions of claim 15, which, when executed by the processing system, cause said system to perform the method further for:

maintaining a cadence window, wherein the cadence window is updated as an actual cadence changes; and

counting a periodic human motion when an acceleration measurement that meets motion criteria is within the cadence window.

18. The non-transitory machine readable medium containing executable computer program instructions of claim 17, wherein at least one of the motion criteria is a dynamic motion criterion, the dynamic motion criterion updated to reflect current conditions.

19. The non-transitory machine readable medium containing executable computer program instructions of claim 18, wherein the dynamic motion criteria includes at least a lower threshold, wherein the lower threshold is adjusted based on at least one of a rolling average of accelerations and the orientation of the inertial sensor.

20. The non-transitory machine readable medium containing executable computer program instructions of claim 15, which, when executed by the processing system, cause said system to perform the method further for:

switching the device from an active mode to a non-active mode when a number of expected periodic human motions are not identified in the appropriate cadence windows.

ABSTRACT

A method for monitoring human activity using an inertial sensor includes continuously determining an orientation of the inertial sensor, assigning a dominant axis, updating the dominant axis as the orientation of the inertial sensor changes, and counting periodic human motions by monitoring accelerations relative to the dominant axis.

Attorney's Docket No. 8689P027C2 PATENT

IN THE UNITED STATES PATENT AND TRADEMARK OFFICE

Applicant	:	Philippe Kahn, et al.	Examiner:	Not yet assigned
Appl. No.	:	Not yet assigned	Art Unit:	Not yet assigned
Filed	:	Herewith	Conf No:	Not yet assigned
For	:	Human Activity Monitoring Device		
Customer No.	:	08791		

CERTIFICATE OF TRANSMISSION
I hereby certify that this correspondence is being submitted electronically via EFS Web on the date shown below.

/Judith Szepesi/ January 31, 2011
Judith A. Szepesi ***Date***

Commissioner for Patents
P.O. Box 1450
Alexandria, Virginia 22313-1450

INFORMATION DISCLOSURE STATEMENT

Sir:

Enclosed is a copy of Information Disclosure Citation Form PTO-1449 or PTO/SB/08 together with copies of the documents cited on that form, except for copies not required to be submitted (e.g., copies of U.S. patents and U.S. published patent applications need not be enclosed). It is respectfully requested that the cited documents be considered and that the enclosed copy of Information Disclosure Citation Form PTO-1449 or PTO/SB/08 be initialed by the Examiner to indicate such consideration and a copy thereof returned to applicant(s).

Pursuant to 37 C.F.R. § 1.97, the submission of this Information Disclosure Statement is not to be construed as a representation that a search has been made and is not to be construed as an admission that the information cited in this statement is material to patentability.

Pursuant to 37 C.F.R. § 1.97, this Information Disclosure Statement is being submitted under one of the following (as indicated by an "X" to the left of the appropriate paragraph):

__X__ 37 C.F.R. §1.97(b).

_____ 37 C.F.R. §1.97(c). If so, then enclosed with this Information Disclosure Statement is one of the following:

____ A statement pursuant to 37 C.F.R. §1.97(e) or

____ The Director is Authorized to charge in the amount of $180.00 for the fee under 37 C.F.R. § 1.17(p).

_____ 37 C.F.R. §1.97(d). If so, then enclosed with this Information Disclosure Statement are the following:

(1) A statement pursuant to 37 C.F.R. §1.97(e); and

(2) A check for $180.00 for the fee under 37 C.F.R. §1.17(p) for submission of the Information Disclosure Statement.

If there are any additional charges, please charge Deposit Account No. 02-2666.

Respectfully submitted,

BLAKELY, SOKOLOFF, TAYLOR & ZAFMAN LLP

Dated: January 31, 2011

/Judith Szepesi/
Judith A. Szepesi
Reg. No. 39,393

1279 Oakmead Parkway
Sunnyvale, CA 94085
(408) 720-8300

Substitute for Form 1449/PTO				Complete if Known	
INFORMATION DISCLOSURE STATEMENT BY APPLICANT				Application Number	Not yet assigned
(use as many sheets as necessary)				Filing Date	Herewith
				First Named Inventor:	Philippe Kahn
				Art Unit	Not yet assigned
				Examiner Name	Not yet assigned
Sheet	1	**of**	4	Attorney Docket Number	8689P027C2

U.S. PATENT DOCUMENTS

Examiner Initials*	Cite No.[1]	Document Number Number-Kind Code[2] (If known)		Publication Date MM-DD-YYYY	Name of Patentee or Applicant of Cited Document	Pages, Columns, Lines, Where Relevant Passages or Relevant Figures Appear
		US-	4,285,041	8/18/1981	Smith	
		US-	4,578,769	3/25/1986	Frederick	
		US-	5,446,725	8/29/1995	Ishiwatari	
		US-	5,446,775	8/25/1995	Wright et al	
		US-	5,593,431	1/14/1997	Sheldon	
		US-	5,955,667	9/21/1999	Fyfe	
		US-	5,976,083	11/2/1999	Richardson, et al.	
		US-	6,013,007	1/11/2000	Root et al	
		US-	6,135,951	10/24/2000	Richardson, et al.	
		US-	6,145,389	11/14/2000	Ebeling, et al.	
		US-	6,369,794	4/9/2002	Sakurai et al	
		US-	6,493,652	12/10/2002	Ohlenbusch et al	
		US-	6,513,381	2/4/2003	Fyfe et al.	
		US-	6,522,266	2/18/2003	Soehren, et al.	
		US-	6,532,419	3/11/2003	Begin, et al.	
		US-	6,539,336	3/25/2003	Vock, et al.	
		US-	6,611,789	8/26/2003	Darley, Jesse	
		US-	6,700,499	3/2/2004	Kubo et al	
		US-	6,790,178	9/14/2004	Mault, et al.	
		US-	6,813,582	11/2/2004	Levi et al.	
		US-	6,823,036	11/23/2004	Chen	
		US-	6,826,477	11/30/2004	Ladetto et al	
		US-	6,836,744	12/28/2004	Asphahani, et al.	
		US-	6,881,191	4/19/2005	Oakley, et al.	
		US-	6,885,971	4/26/2005	Vock, et al.	
		US-	6,898,550	5/24/2005	Blackadar, et al.	
		US-	6,928,382	8/9/2005	Hong et al	
		US-	6,941,239	9/6/2005	Unuma, et al.	

Examiner Signature		Date Considered	

*EXAMINER: Initial if reference considered, whether or not citation is in conformance with MPEP 609; Draw line through citation if not in conformance and not considered. Include copy of this form with next communication to applicant. [1]Applicant's unique citation designation number (optional). [2]See Kinds Codes of USPTO Patent Documents at www.uspto.gov or MPEP 901.04. [3]Enter Office that issued the document, by the two-letter code (WIPO Standard ST.3). [4]For Japanese patent documents, the indication of the year of reign of the Emperor must precede the serial number of the patent document. [5]Kind of document by the appropriate symbols as indicated on the document under WIPO Standard ST. 16 if possible. [6]Applicant is to place a check mark here if English language translation is attached.

This collection of information is required by 37 CFR 1.97 and 1.98. The information is required to obtain or retain a benefit by the public which is to file (and by the USPTO to process) an application. Confidentiality is governed by 35 U.S.C. 122 and 37 CFR 1.14. This collection is estimated to take 2 hours to complete including gathering, preparing, and submitting the completed application form to the USPTO. Time will vary depending upon the individual case. Any comments on the amount of time you require to complete this form and/or suggestions for reducing this burden, should be sent to the Chief Information Officer, U.S. Patent and Trademark Office, P.O. Box 1450, Alexandria, VA 22313-1450. DO NOT SENT FEES OR COMPLETED FORMS TO THIS ADDRESS. **SEND TO: Commissioner for Patents, P.O. Box 1450, Alexandria, Virginia 22313-1450.**

If you need assistance in completing the form, call 1-800-PTO-9199 (1-800-786-9199) and select option 2.

Substitute for Form 1449/PTO				Complete if Known	
INFORMATION DISCLOSURE STATEMENT BY APPLICANT *(use as many sheets as necessary)*				Application Number	Not yet assigned
				Filing Date	Herewith
				First Named Inventor:	Philippe Kahn
				Art Unit	Not yet assigned
				Examiner Name	Not yet assigned
Sheet	2	**of**	4	Attorney Docket Number	8689P027C2

U.S. PATENT DOCUMENTS

Examiner Initials*	Cite No.[1]	Document Number Number-Kind Code[2] (If known)		Publication Date MM-DD-YYYY	Name of Patentee or Applicant of Cited Document	Pages, Columns, Lines, Where Relevant Passages or Relevant Figures Appear
		US-	6,959,259	10/25/2005	Vock, et al.	
		US-	6,975,959	12/13/2005	Dietrich et al	
		US-	7,010,332	3/7/2006	Irvin et al	
		US-	7,072,789	7/4/2006	Vock, et al.	
		US-	7,092,846	8/15/2006	Vock, et al.	
		US-	7,148,797	12/12/2006	Albert	
		US-	7,158,912	1/20/2007	Vock, et al.	
		US-	7,169,084	1/30/2007	Tsuji, Tomoharu	
		US-	7,171,331	1/30/2007	Vock, et al.	
		US-	7,200,517	4/3/2007	Darley, et al.	
		US-	7,212,943	5/1/2007	Aoshima, et al.	
		US-	7,220,220	5/22/2007	Stubbs, et al.	
		US-	7,297,088	11/20/2007	Tsuji, Tomoharu	
		US-	7,334,472	2/26/2008	Seo et al	
		US-	7,353,112	4/1/2008	Choi et al	
		US-	7,382,611	2/12/2008	Klees, et al.	
		US-	7,387,611	6/17/2008	Inoue et al.	
		US-	7,457,719	11/25/2008	Kahn et al	
		US-	7,526,402	4/28/2009	Tenanhaus et al	
		US-	7,647,196	1/12/2010	Kahn et al	
		US-	7,653,508	1/26/2010	Kahn et al	
		US-	7,753,861	7/13/2010	Kahn et al	
		US-	2002/0089425	7/11/2002	Kubo et al	
		US-	2002/0109600	8/15/2002	Mault, James R.; et al.	
		US-	2002/0151810	10/17/2002	Wong, Philip Lim-Kong; et al.	
		US-	2003/0018430	1/23/2003	Ladetto et al	
		US-	2003/0083596	5/1/2003	Kramer et al	
		US-	2003/0109258	6/12/2003	Mantyjarvi et al	

Examiner Signature		Date Considered	

*EXAMINER: Initial if reference considered, whether or not citation is in conformance with MPEP 609; Draw line through citation if not in conformance and not considered. Include copy of this form with next communication to applicant. [1]Applicant's unique citation designation number (optional). [2]See Kinds Codes of USPTO Patent Documents at www.uspto.gov or MPEP 901.04. [3]Enter Office that issued the document, by the two-letter code (WIPO Standard ST.3). [4]For Japanese patent documents, the indication of the year of reign of the Emperor must precede the serial number of the patent document. [5]Kind of document by the appropriate symbols as indicated on the document under WIPO Standard ST. 16 if possible. [6]Applicant is to place a check mark here if English language translation is attached.

This collection of information is required by 37 CFR 1.97 and 1.98. The information is required to obtain or retain a benefit by the public which is to file (and by the USPTO to process) an application. Confidentiality is governed by 35 U.S.C. 122 and 37 CFR 1.14. This collection is estimated to take 2 hours to complete including gathering, preparing, and submitting the completed application form to the USPTO. Time will vary depending upon the individual case. Any comments on the amount of time you require to complete this form and/or suggestions for reducing this burden, should be sent to the Chief Information Officer, U.S. Patent and Trademark Office, P.O. Box 1450, Alexandria, VA 22313-1450. DO NOT SENT FEES OR COMPLETED FORMS TO THIS ADDRESS. **SEND TO: Commissioner for Patents, P.O. Box 1450, Alexandria, Virginia 22313-1450**.

If you need assistance in completing the form, call 1-800-PTO-9199 (1-800-786-9199) and select option 2.

Substitute for Form 1449/PTO				Complete if Known	
INFORMATION DISCLOSURE STATEMENT BY APPLICANT *(use as many sheets as necessary)*				Application Number	Not yet assigned
				Filing Date	Herewith
				First Named Inventor:	Philippe Kahn
				Art Unit	Not yet assigned
				Examiner Name	Not yet assigned
Sheet	3	**of**	4	Attorney Docket Number	8689P027C2

U.S. PATENT DOCUMENTS

Examiner Initials*	Cite No.[1]	Document Number Number-Kind Code[2] (If known)		Publication Date MM-DD-YYYY	Name of Patentee or Applicant of Cited Document	Pages, Columns, Lines, Where Relevant Passages or Relevant Figures Appear
		US-	2003/0139692	7/24/2003	Barrey et al	
		US-	2004/0225467	11/11/2004	Vock, Curtis A.; et al.	
		US-	2004/0236500	11/25/2004	Choi et al	
		US-	2005/0033200	2/10/2005	Soehren, Wayne A.; et al.	
		US-	2005/0222801	10/6/2005	Wulff et al	
		US-	2005/0232388	10/20/2005	Tsuji, Tomoharu	
		US-	2005/0232404	10/20/2005	Gaskill	
		US-	2005/0238132	10/27/2005	Tsuji, Tomoharu	
		US-	2005/0240375	10/27/2005	Sugai, Yoshinori	
		US-	2005/0248718	11/10/2005	Howell, Thomas A., et al.	
		US-	2006/0020177	1/26/2006	Seo et al	
		US-	2006/0100546	5/11/2006	Silk, Jeffrey E	
		US-	2006/0136173	6/22/2006	Charles Whipple Jr.; et al.	
		US-	2006/0223547	10/5/2006	Chin et al	
		US-	2007/0061105	3/15/2007	Darley et al	
		US-	2007/0063850	3/22/2007	Devaul; Richard W.; et al.	
		US-	2007/0067094	3/22/2007	Park et al	
		US-	2007/0082789	4/12/2007	Nissila et al	
		US-	2007/0125852	6/7/2007	Rosenberg	
		US-	2007/0142715	6/21/2007	Banet et al.	
		US-	2007/0208531	9/6/2007	Darley et al	
		US-	2009/0043531	2/12/2009	Kahn et al	
		US-	2009/0234614	9/17/2009	Kahn et al	
		US-	2009/0319221	12/24/2009	Kahn et al	
		US-	2010/0056872	3/4/2010	Kahn et al	
		US-	2010/0057398	3/4/2010	Darley et al	
		US-				

Examiner Signature		Date Considered	

*EXAMINER: Initial if reference considered, whether or not citation is in conformance with MPEP 609; Draw line through citation if not in conformance and not considered. Include copy of this form with next communication to applicant. [1]Applicant's unique citation designation number (optional). [2]See Kinds Codes of USPTO Patent Documents at www.uspto.gov or MPEP 901.04. [3]Enter Office that issued the document, by the two-letter code (WIPO Standard ST.3). [4]For Japanese patent documents, the indication of the year of reign of the Emperor must precede the serial number of the patent document. [5]Kind of document by the appropriate symbols as indicated on the document under WIPO Standard ST. 16 if possible. [6]Applicant is to place a check mark here if English language translation is attached.

This collection of information is required by 37 CFR 1.97 and 1.98. The information is required to obtain or retain a benefit by the public which is to file (and by the USPTO to process) an application. Confidentiality is governed by 35 U.S.C. 122 and 37 CFR 1.14. This collection is estimated to take 2 hours to complete including gathering, preparing, and submitting the completed application form to the USPTO. Time will vary depending upon the individual case. Any comments on the amount of time you require to complete this form and/or suggestions for reducing this burden, should be sent to the Chief Information Officer, U.S. Patent and Trademark Office, P.O. Box 1450, Alexandria, VA 22313-1450. DO NOT SENT FEES OR COMPLETED FORMS TO THIS ADDRESS. **SEND TO: Commissioner for Patents, P.O. Box 1450, Alexandria, Virginia 22313-1450**.

If you need assistance in completing the form, call 1-800-PTO-9199 (1-800-786-9199) and select option 2.

Substitute for Form 1449/PTO				Complete if Known	
INFORMATION DISCLOSURE STATEMENT BY APPLICANT *(use as many sheets as necessary)*				Application Number	Not yet assigned
				Filing Date	Herewith
				First Named Inventor:	Philippe Kahn
				Art Unit	Not yet assigned
				Examiner Name	Not yet assigned
Sheet	4	**of**	4	Attorney Docket Number	8689P027C2

NON PATENT LITERATURE DOCUMENTS

Examiner Initials*	Cite No[1]	Include name of the author (in CAPITAL LETTERS), title of the article (when appropriate), title of the item (book, magazine, journal, serial, symposium, catalog, etc.), date, page(s), volume-issue number(s), publisher, city and/or country where published	T[2]
		BOURZAC, Katherine "Wearable Health Reports," Technology Review, February 28, 2006, http://www.techreview.com/printer_friendly_article_aspx?id+16431, 3/22/2007, 3 pages.	
		DAO, Ricardo, "Inclination Sensing with Thermal Accelerometers", MEMSIC, May 2002, 3 pages.	
		LEE, SEON-WOO, et al., "Recognition of Walking Behaviors for Pedestrian Navigation," ATR Media Integration & Communications Research Laboratories, Kyoto, Japan, 4 pages.	
		MARGARIA, Rodolfo, "Biomechanics and Energetics of Muscular Exercise", Chapter 3, pages 105-125, Oxford: Clarendon Press 1976.	
		MIZELL, David, "Using Gravity to Estimate Accelerometer Orientation", Seventh IEEE International Symposium on Wearable Computers, 2003, 2 pages.	
		ORMONEIT, D., et al., "Learning and Tracking Cyclic Human Motion," Encyclopedia of Library and Information Science, volume 53, supplement 16, 2001, 7 pages.	
		PCT International Search Report and Written Opinion for International Application No. PCT/US2008/072537, mailed 22 October 2008, 10 pages.	
		PCT International Search Report and Written Opinion for International Application No. PCT/US2009/48523, mailed 27 August 2009, 8 pages.	
		WEINBERG, Harvey, "MEMS Motion Sensors Boost Handset Reliability" June 2006, http://www.mwrf.com/Articles/Print.cfm?ArticleID=12740, February 21, 2007, 4 pages.	

Examiner Signature		Date Considered	

*Examiner: Initial if reference considered, whether or not citation is in conformance with MPEP 609. Draw line through citation if not in conformance and not considered. Include copy of this form with next communication to applicant.

[1]Applicant's unique citation designation number (optional). [2]Applicant is to place a check mark here if English Translation is attached.

This collection of information is required by 37 CFR 1.98. The information is required to obtain or retain a benefit by the public which is to file (and by the USPTO to process) an application. Confidentiality is governed by 35 U.S.C. 122 and 37 CFR 1.14. This collection is estimated to take 2 hours to complete including gathering, preparing, and submitting the completed application form to the USPTO. Time will vary depending upon the individual case. Any comments on the amount of time you require to complete this form and/or suggestions for reducing this burden, should be sent to the Chief Information Officer, U.S. Patent and Trademark Office, P.O. Box 1450, Alexandria, VA 22313-1450. DO NOT SENT FEES OR COMPLETED FORMS TO THIS ADDRESS. **SEND TO: Commissioner for Patents, P.O. Box 1450, Alexandria, Virginia 22313-1450.**

If you need assistance in completing the form, call 1-800-PTO-9199 (1-800-786-9199) and select option 2.