Petitioner Bluehouse Global Ltd.

Ex. 1004

US 20110109351A1

(19) United States

(12) Patent Application Publication

YAMAZAKI et al.

(10) Pub. No.: US 2011/0109351 A1

(43) Pub. Date: May 12, 2011

(54) **SEMICONDUCTOR DEVICE AND MANUFACTURING METHOD THEREOF**

(75) Inventors: **Shunpei YAMAZAKI**, Setagaya (JP); **Jun KOYAMA**, Sagamihara (JP); **Hiroyuki MIYAKE**, Atsugi (JP)

(73) Assignee: **SEMICONDUCTOR ENERGY LABORATORY CO., LTD.**, Atsugi (JP)

(21) Appl. No.: **12/938,533**

(22) Filed: **Nov. 3, 2010**

(30) **Foreign Application Priority Data**

Nov. 6, 2009 (JP) 2009-255535

Publication Classification

(51) **Int. Cl.**

H03K 3/00	(2006.01)
H01L 29/786	(2006.01)
H01L 21/44	(2006.01)

(52) **U.S. Cl.** **327/109**; 257/43; 438/104; 257/E29.296; 257/E21.476

(57) **ABSTRACT**

An oxide semiconductor layer which is intrinsic or substantially intrinsic and includes a crystalline region in a surface portion of the oxide semiconductor layer is used for the transistors. An intrinsic or substantially intrinsic semiconductor from which an impurity which is to be an electron donor (donor) is removed from an oxide semiconductor and which has a larger energy gap than a silicon semiconductor is used. Electrical characteristics of the transistors can be controlled by controlling the potential of a pair of conductive films which are provided on opposite sides from each other with respect to the oxide semiconductor layer, each with an insulating film arranged therebetween, so that the position of a channel formed in the oxide semiconductor layer is determined.

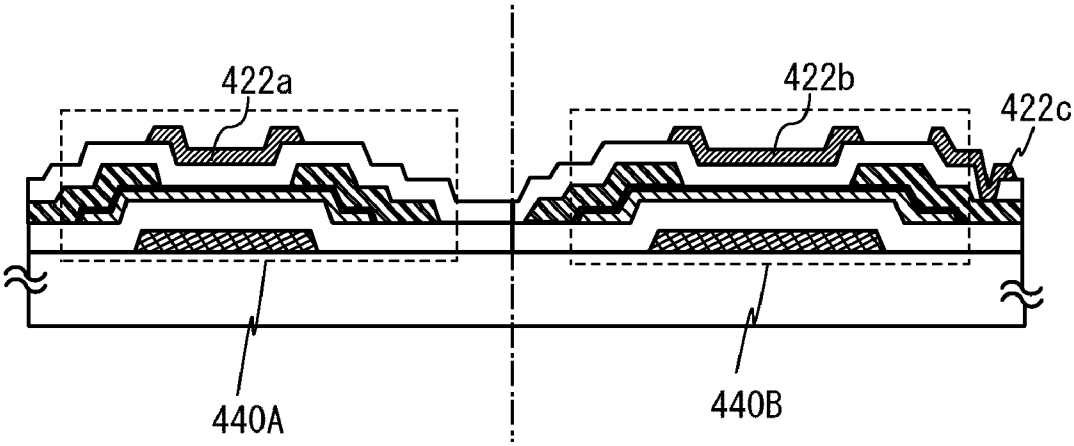

FIG. 1A

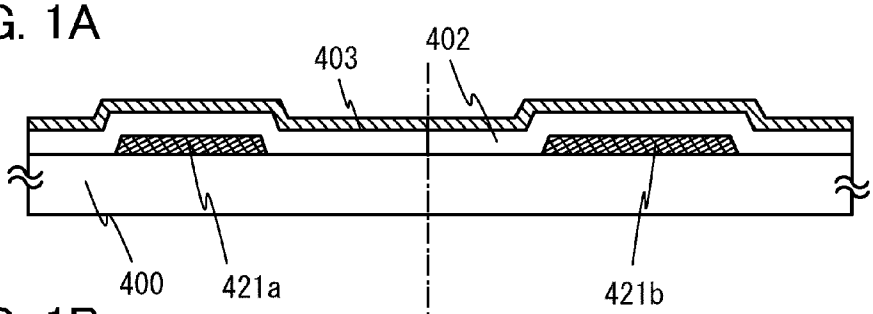

FIG. 1B

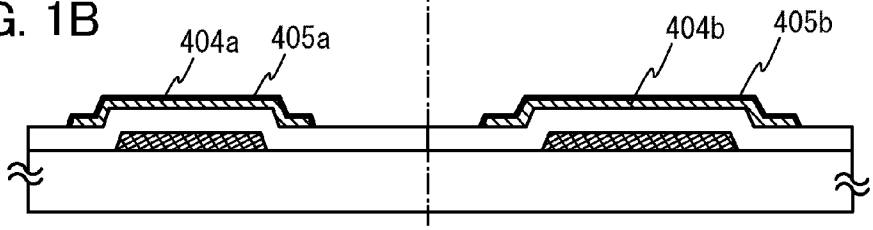

FIG. 1C

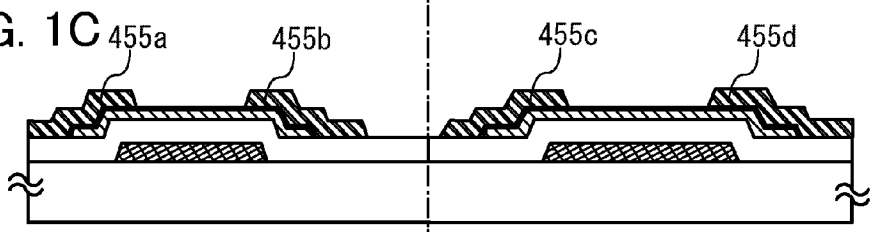

FIG. 1D

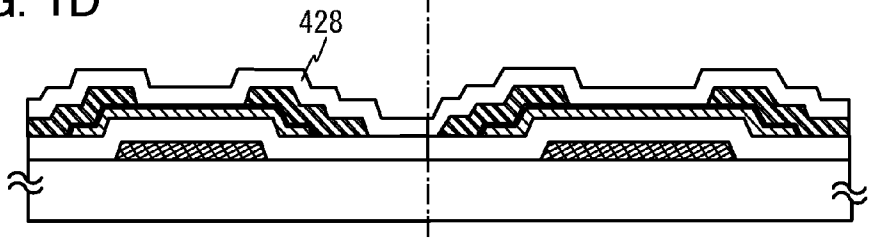

FIG. 1E

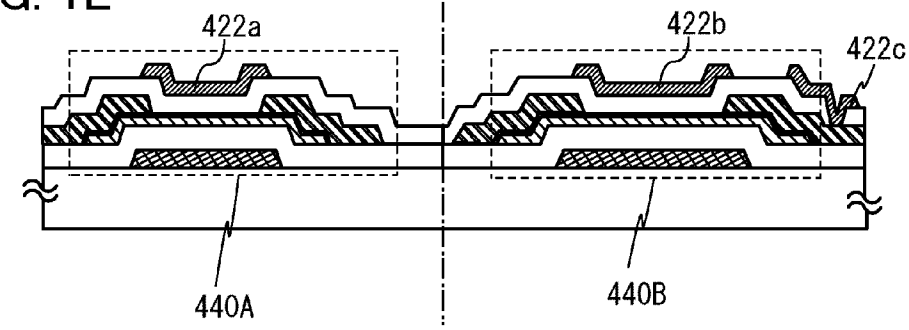

FIG. 2

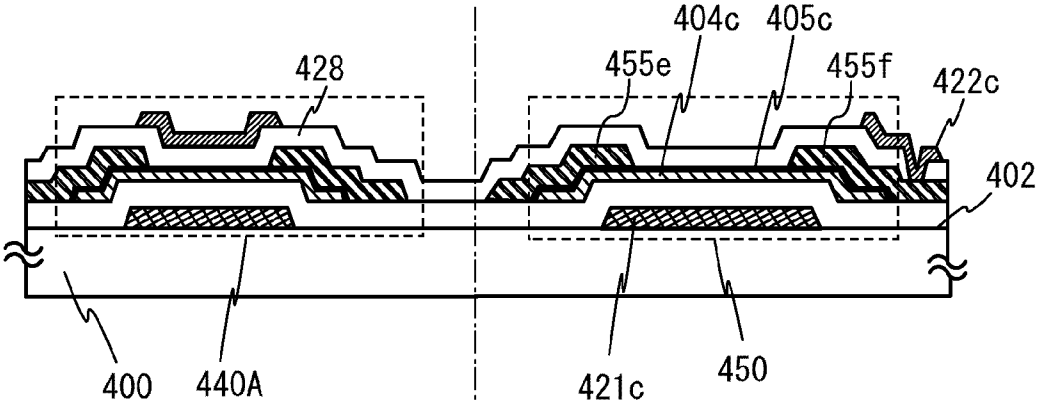

FIG. 3A

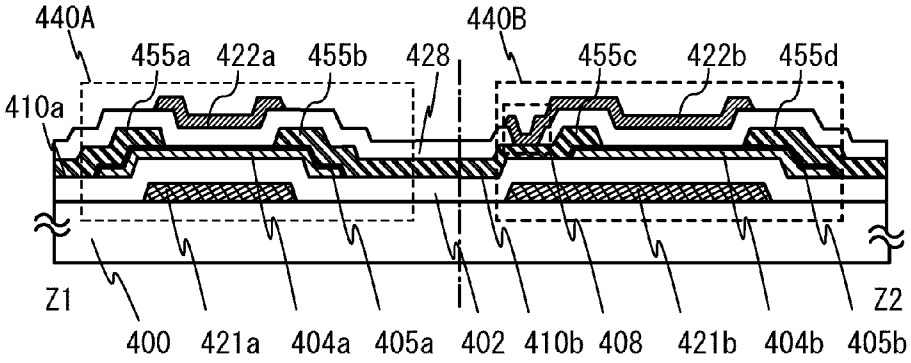

FIG. 3B

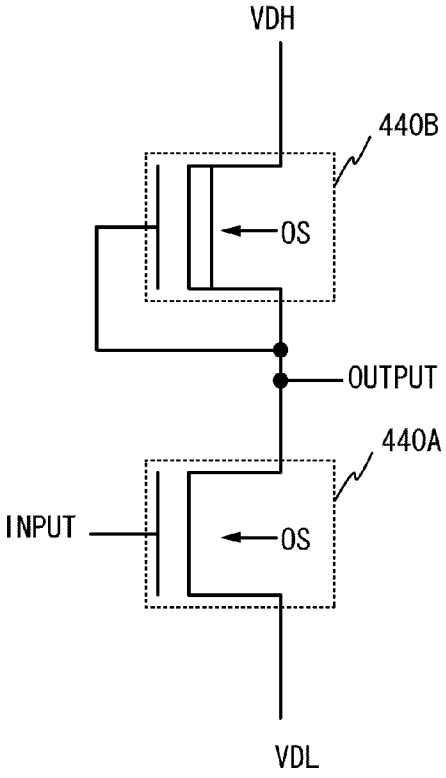

FIG. 3C

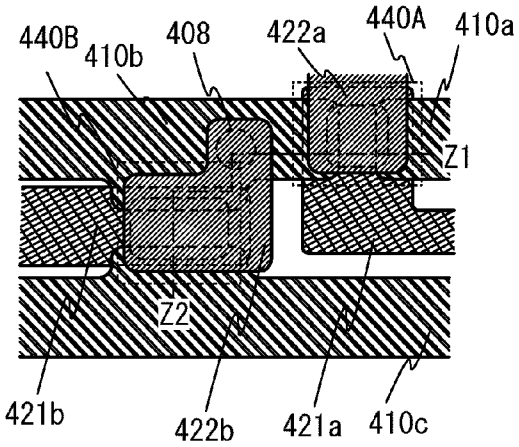

DOCKET ALARM

Explore Litigation Insights

Docket Alarm provides insights to develop a more informed litigation strategy and the peace of mind of knowing you're on top of things.

Real-Time Litigation Alerts

Keep your litigation team up-to-date with **real-time alerts** and advanced team management tools built for the enterprise, all while greatly reducing PACER spend.

Our comprehensive service means we can handle Federal, State, and Administrative courts across the country.

Advanced Docket Research

With over 230 million records, Docket Alarm's cloud-native docket research platform finds what other services can't. Coverage includes Federal, State, plus PTAB, TTAB, ITC and NLRB decisions, all in one place.

Identify arguments that have been successful in the past with full text, pinpoint searching. Link to case law cited within any court document via Fastcase.

Analytics At Your Fingertips

Learn what happened the last time a particular judge, opposing counsel or company faced cases similar to yours.

Advanced out-of-the-box PTAB and TTAB analytics are always at your fingertips.

API

Docket Alarm offers a powerful API (application programming interface) to developers that want to integrate case filings into their apps.

LAW FIRMS

Build custom dashboards for your attorneys and clients with live data direct from the court.

Automate many repetitive legal tasks like conflict checks, document management, and marketing.

FINANCIAL INSTITUTIONS

Litigation and bankruptcy checks for companies and debtors.

E-DISCOVERY AND LEGAL VENDORS

Sync your system to PACER to automate legal marketing.