Petitioner Bluehouse Global Ltd.

Ex. 1006

US006784453B2

(12) **United States Patent**
Miyazaki et al.

(10) **Patent No.: US 6,784,453 B2**
(45) **Date of Patent: Aug. 31, 2004**

(54) **SEMICONDUCTOR DEVICE AND METHOD FOR PRODUCING THE SAME**

(75) Inventors: **Minoru Miyazaki**, Hokkaido (JP); **Akane Murakami**, Kanagawa (JP); **Satoshi Teramoto**, Kanagawa (JP)

(73) Assignee: **Semiconductor Energy Laboratory Co., Ltd.**, Kanagawa-ken (JP)

(*) Notice: Subject to any disclaimer, the term of this patent is extended or adjusted under 35 U.S.C. 154(b) by 0 days.

(21) Appl. No.: **10/336,805**

(22) Filed: **Jan. 6, 2003**

(65) **Prior Publication Data**

US 2003/0132482 A1 Jul. 17, 2003

Related U.S. Application Data

(62) Division of application No. 09/782,299, filed on Feb. 14, 2001, now Pat. No. 6,569,719, which is a division of application No. 08/635,283, filed on Apr. 19, 1996, now Pat. No. 6,201,281, which is a continuation of application No. 08/270,773, filed on Jul. 5, 1994, now abandoned.

(30) **Foreign Application Priority Data**

Jul. 7, 1993 (JP) 5-192829

(51) **Int. Cl.**[7] **H01L 31/036**
(52) **U.S. Cl.** **257/49**; 257/72; 257/347
(58) **Field of Search** 257/49, 72–74, 257/347, 348; 438/96–97, 482

(56) **References Cited**

U.S. PATENT DOCUMENTS

3,855,112	A	12/1974	Tomozawa et al.
4,570,328	A	2/1986	Price et al.
4,646,426	A	3/1987	Sasaki
4,707,721	A	11/1987	Ang et al.

(List continued on next page.)

FOREIGN PATENT DOCUMENTS

EP	0 502 749	A2	9/1992
JP	61-183971		8/1986
JP	2-295111	A	12/1990
JP	04-11722	A	1/1992
JP	04-058564	A	2/1992
JP	04-101453	A	4/1992
JP	04-360580	A	12/1992
JP	05-114724	A	5/1993
JP	05-299655	A	11/1993
JP	06-013615	A	1/1994

OTHER PUBLICATIONS

S.K. Ghandhi, VLSI Fabrication Principles, pp. 486, 498, 525.
S. Wolfe, Silicon Processing for the VLSI Era, vol. 2, pp. 104–105, 124–133, 194–196, 271–273.
J–M Hwang et al., IEDM '92, p. 345 "Novel Polysilicon/TiN Stacked–Gate . . . SOI/CMOS".
M. Wittmer et al., Thin Solid Films, 93(1982) 397 "Applications of TiN thin films . . .".
M. Wittmer, et al., J. Appl. Phys., 54(3) (1983) 1423, "Characteristics of TiN gate MOSEFTs".

Primary Examiner—Long Pham
Assistant Examiner—Nathan W. Ha
(74) *Attorney, Agent, or Firm*—Jeffrey L. Costellia; Nixon Peabody LLP

(57) **ABSTRACT**

In the production of thin film transistor (TFT), a gate insulating film is formed to cover an active layer, a titanium nitride film is formed on the gate insulating film, and an aluminum film used as the gate electrode is formed on the titanium nitride film. The resulted configuration prevents the etching of the aluminum film from the insulating film side even if the etchant of aluminum enters the recessed portion at the edge of the active layer during the patterning of the gate electrode. Also in the anodizing process, when an oxide film is formed on the surface of the aluminum film, the oxidation of aluminum from the gate insulating film side is prevented even when the electrolyte solution enters the recessed portion at the edge of the active layer.

27 Claims, 4 Drawing Sheets

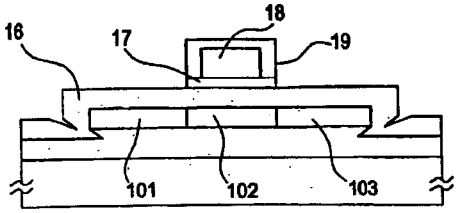

U.S. PATENT DOCUMENTS

4,755,478	A		7/1988	Abernathey et al.
4,931,411	A		6/1990	Tigelaar et al.
5,141,897	A		8/1992	Manocha et al.
5,166,086	A		11/1992	Takeda et al.
5,177,577	A		1/1993	Taniguchi et al.
5,240,868	A		8/1993	Bae et al.
5,245,207	A		9/1993	Mikoshiba et al.
5,252,502	A		10/1993	Havemann
5,308,998	A		5/1994	Yamazaki et al.
5,366,912	A		11/1994	Kobayashi
5,470,762	A		11/1995	Codama et al.
5,478,766	A		12/1995	Park et al.
5,498,573	A		3/1996	Whetten
5,576,225	A		11/1996	Zhang et al.
5,604,137	A		2/1997	Yamazaki et al.
5,614,732	A		3/1997	Yamazaki
6,201,281	B1	*	3/2001	Miyazaki et al. 257/347
6,376,860	B1	*	4/2002	Mitanaga et al. 257/57
2003/0006414	A1	*	1/2003	Takemura et al. 257/72

* cited by examiner

FIG. 1A

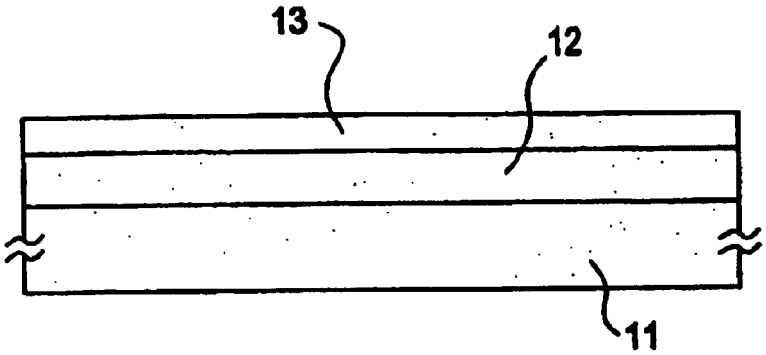

FIG. 1B

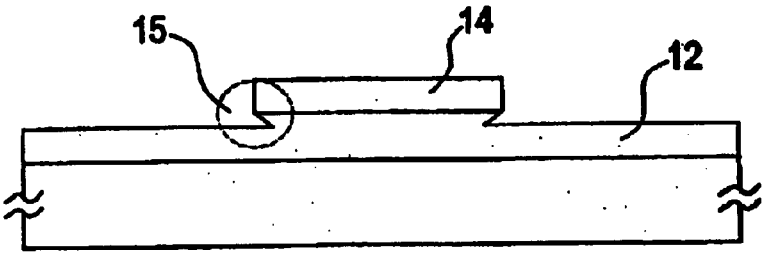

FIG. 1C

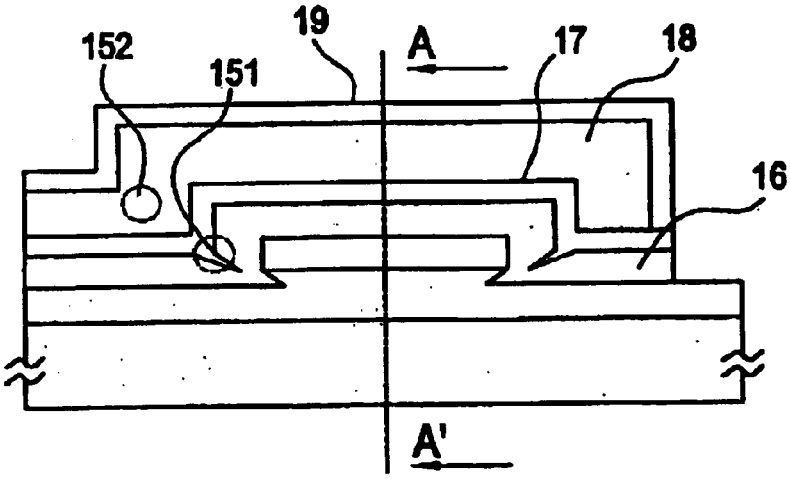

FIG. 1D

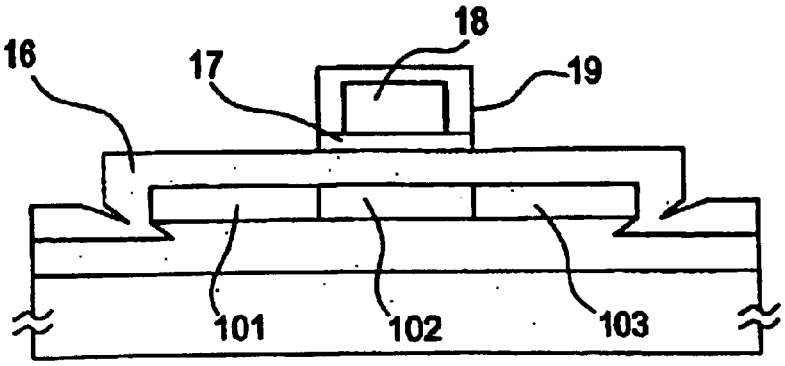

FIG. 2A
PRIOR ART

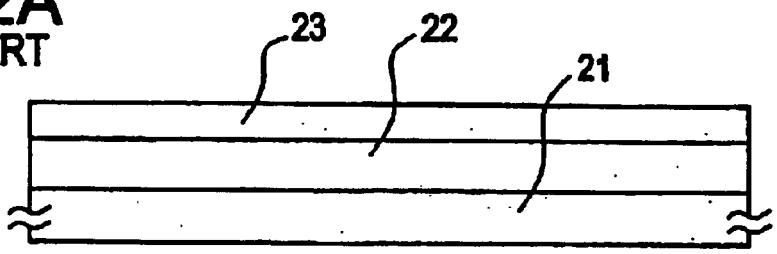

FIG. 2B
PRIOR ART

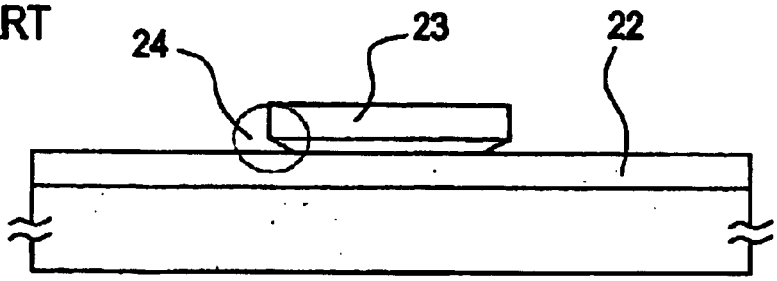

FIG. 2C
PRIOR ART

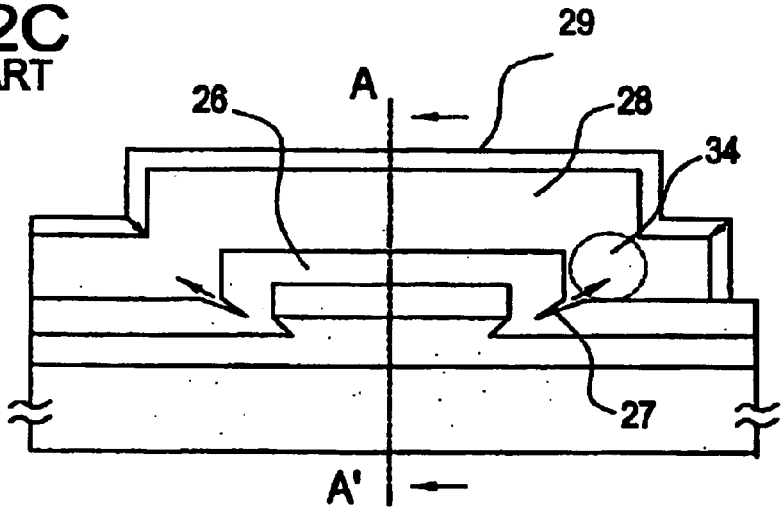

FIG. 2D
PRIOR ART

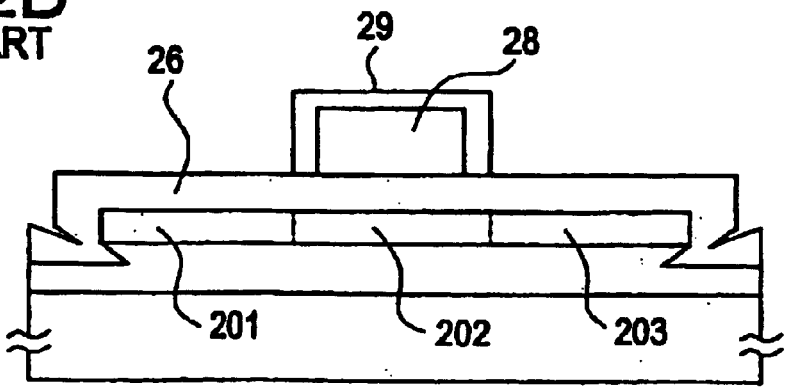

DOCKET ALARM

Explore Litigation Insights

Docket Alarm provides insights to develop a more informed litigation strategy and the peace of mind of knowing you're on top of things.

Real-Time Litigation Alerts

Keep your litigation team up-to-date with **real-time alerts** and advanced team management tools built for the enterprise, all while greatly reducing PACER spend.

Our comprehensive service means we can handle Federal, State, and Administrative courts across the country.

Advanced Docket Research

With over 230 million records, Docket Alarm's cloud-native docket research platform finds what other services can't. Coverage includes Federal, State, plus PTAB, TTAB, ITC and NLRB decisions, all in one place.

Identify arguments that have been successful in the past with full text, pinpoint searching. Link to case law cited within any court document via Fastcase.

Analytics At Your Fingertips

Learn what happened the last time a particular judge, opposing counsel or company faced cases similar to yours.

Advanced out-of-the-box PTAB and TTAB analytics are always at your fingertips.

API

Docket Alarm offers a powerful API (application programming interface) to developers that want to integrate case filings into their apps.

LAW FIRMS

Build custom dashboards for your attorneys and clients with live data direct from the court.

Automate many repetitive legal tasks like conflict checks, document management, and marketing.

FINANCIAL INSTITUTIONS

Litigation and bankruptcy checks for companies and debtors.

E-DISCOVERY AND LEGAL VENDORS

Sync your system to PACER to automate legal marketing.