US007256486B2

(12) **United States Patent**
Lee et al.

(10) **Patent No.: US 7,256,486 B2**
(45) **Date of Patent: Aug. 14, 2007**

(54) **PACKAGING DEVICE FOR SEMICONDUCTOR DIE, SEMICONDUCTOR DEVICE INCORPORATING SAME AND METHOD OF MAKING SAME**

(75) Inventors: **Kong Weng Lee**, Penang (MY); **Kee Yean Ng**, Penang (MY); **Yew Cheong Kuan**, Penang (MY); **Gin Ghee Tan**, Penang (MY); **Cheng Why Tan**, Penang (MY)

(73) Assignee: **Avago Technologies ECBU IP (Singapore) Pte. Ltd.**, Singapore (SG)

(*) Notice: Subject to any disclaimer, the term of this patent is extended or adjusted under 35 U.S.C. 154(b) by 0 days.

(21) Appl. No.: **10/608,605**

(22) Filed: **Jun. 27, 2003**

(65) **Prior Publication Data**

US 2004/0262738 A1 Dec. 30, 2004

(51) **Int. Cl.**
H01L 29/22 (2006.01)

(52) **U.S. Cl.** **257/690**; 257/784; 257/690

(58) **Field of Classification Search** 257/690, 257/784, 700, 689, 774, 783, 99, 100; 361/707, 361/718, 719, 706, 717, 720
See application file for complete search history.

(56) **References Cited**

U.S. PATENT DOCUMENTS

2,907,925	A	10/1959	Parsons	
5,006,673	A	4/1991	Freyman et al.	
5,177,593	A *	1/1993	Abe	257/98
5,298,687	A	3/1994	Rapoport et al.	
5,440,075	A	8/1995	Kawakita et al.	
5,640,048	A *	6/1997	Selna	257/738
5,670,797	A	9/1997	Okazaki	
5,986,885	A *	11/1999	Wyland	361/704
6,084,295	A *	7/2000	Horiuchi et al.	257/690
6,191,477	B1 *	2/2001	Hashemi	257/706
6,268,654	B1 *	7/2001	Glenn et al.	257/704
6,362,525	B1	3/2002	Rahim	
6,383,835	B1	5/2002	Hata et al.	
6,620,720	B1 *	9/2003	Moyer et al.	438/612
6,707,247	B2	3/2004	Murano	
6,828,510	B1	12/2004	Asai et al.	
7,098,593	B2 *	8/2006	Teng	313/581
2002/0139990	A1 *	10/2002	Suehiro et al.	257/99

(Continued)

OTHER PUBLICATIONS

Syd R. Wilson, Clarence J. Tracy, and John L. Freeman, Jr., "Handbook of Multilevel Metallization for Integrated Circuits," N oyes Publ., Westwood, New Jersey (1993), pp. 868-872.*

(Continued)

Primary Examiner—Sara Crane

(57) **ABSTRACT**

The packaging device includes a substrate, a mounting pad, a connecting pad and an interconnecting element. The substrate is substantially planar and has opposed major surfaces. The mounting pad is conductive and is located on one of the major surfaces. The connecting pad is conductive and is located on the other of the major surfaces. The conductive interconnecting element extends through the substrate and electrically interconnects the mounting pad and the connecting pad. The packaging device has a volume that is only a few times that of the semiconductor die and can be fabricated from materials that can withstand high-temperature die attach processes. The packaging device can be configured as the only packaging device used in the semiconductor device or as a submount for a semiconductor die that requires a high-temperature die attach process.

6 Claims, 8 Drawing Sheets

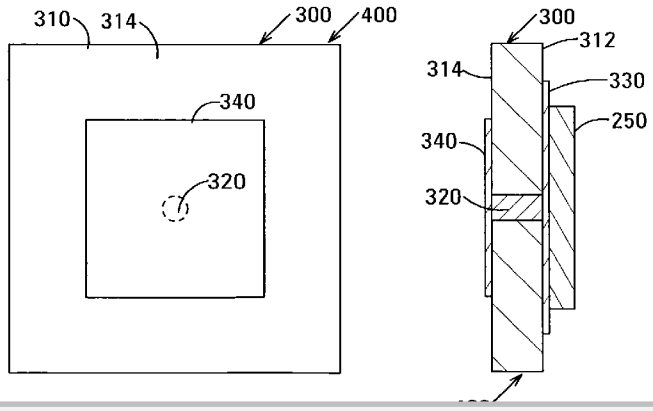

U.S. PATENT DOCUMENTS

2002/0179335	A1	12/2002	Curcio et al.
2003/0017645	A1	1/2003	Kabayashi et al.
2003/0020126	A1	1/2003	Sakamoto et al.
2003/0040138	A1	2/2003	Kobayashi et al.
2003/0168256	A1	9/2003	Chien

OTHER PUBLICATIONS

Electronic Packaging and Production, "Innovative PCB Reinforcement," (Feb. 1997), p. 1.*

Johannes Adam, "New Correlations Between Electrical Current and Temperature Rise in PCB Traces," Proc. 20th IEEE Semi-Therm Symp., (Mar. 2004), pp. 1-8.*

* cited by examiner

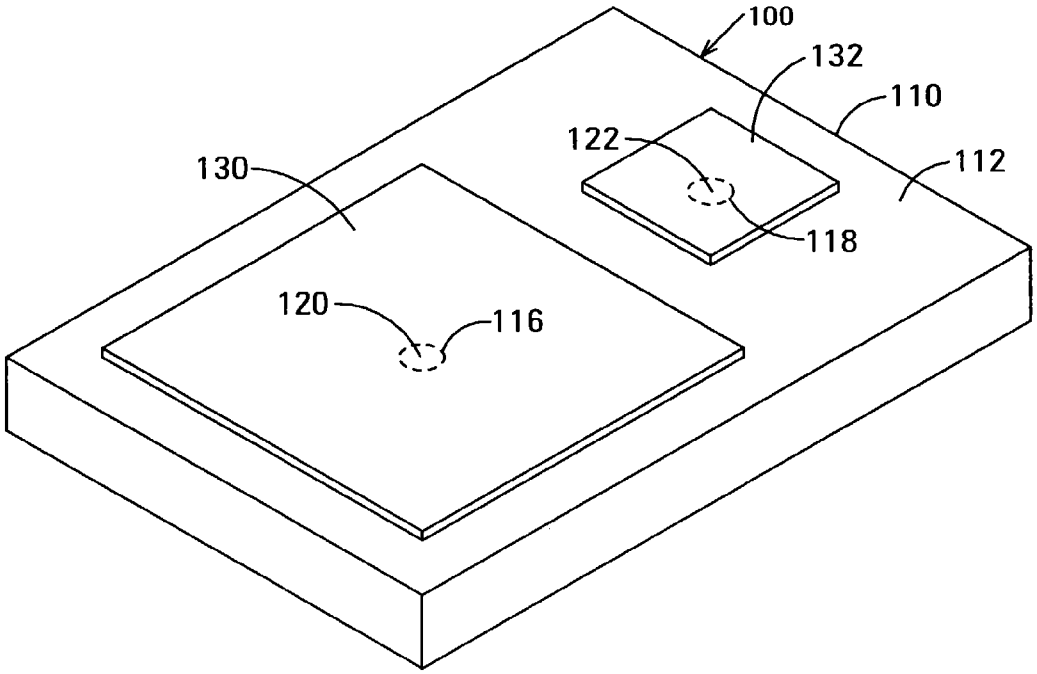

FIG.1A

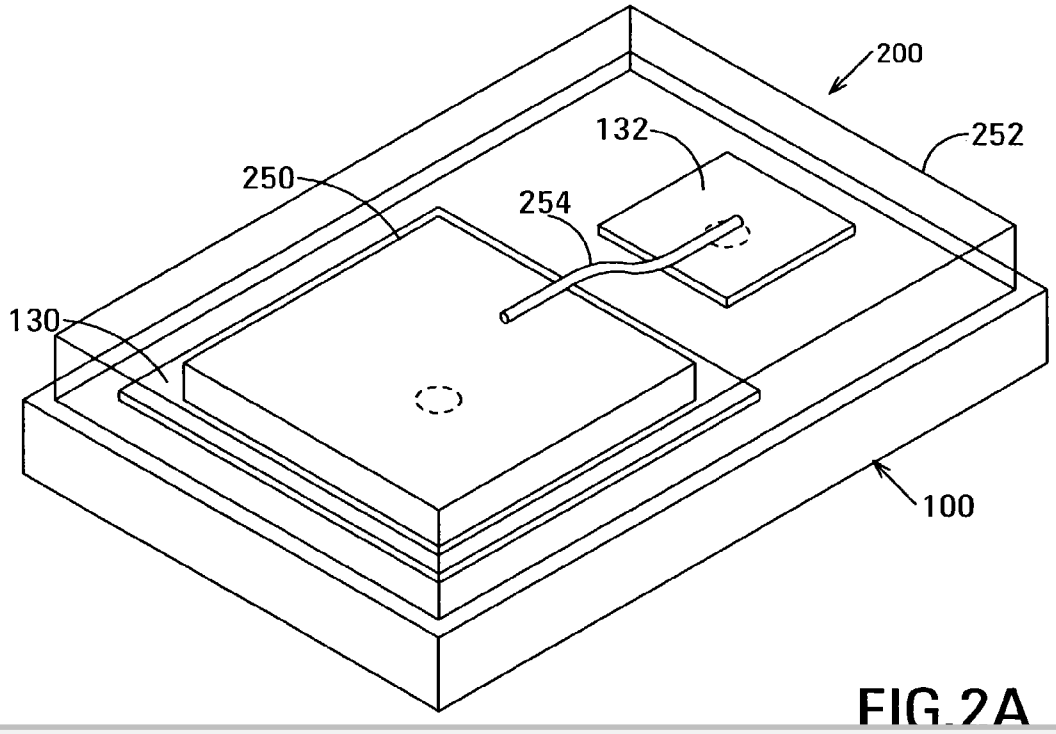

FIG.2A

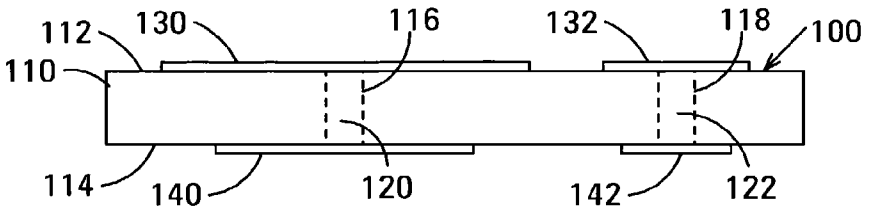

FIG.1B

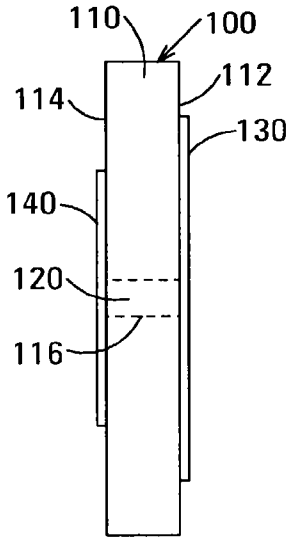

FIG.1C

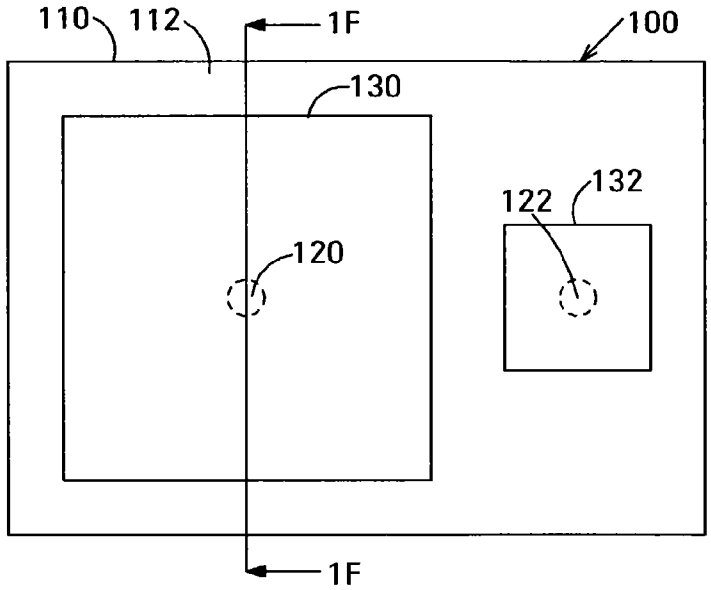

FIG.1D

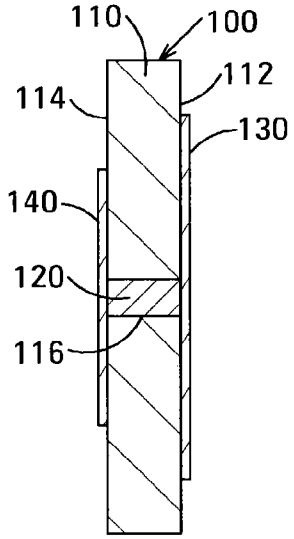

FIG.1F

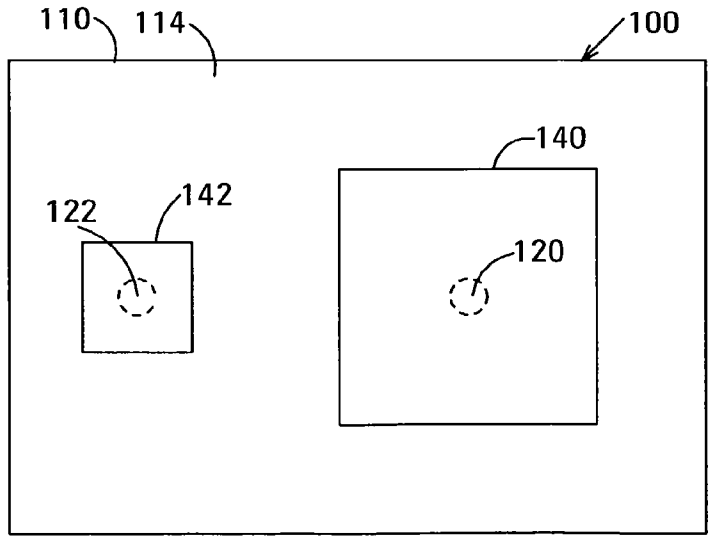

FIG.1E

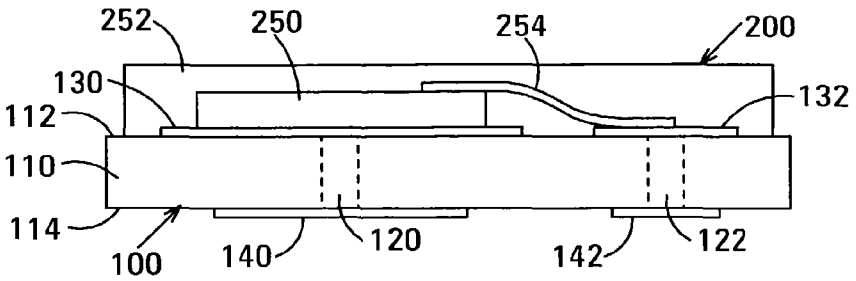

FIG.2B

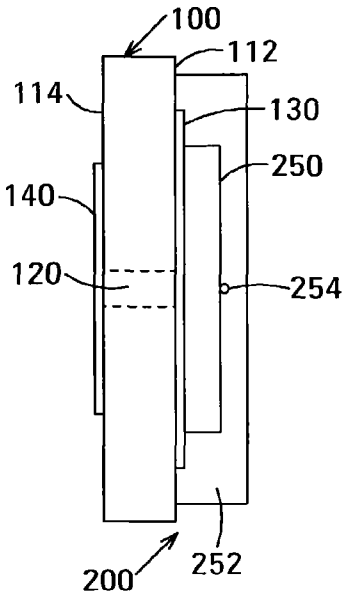

FIG.2C

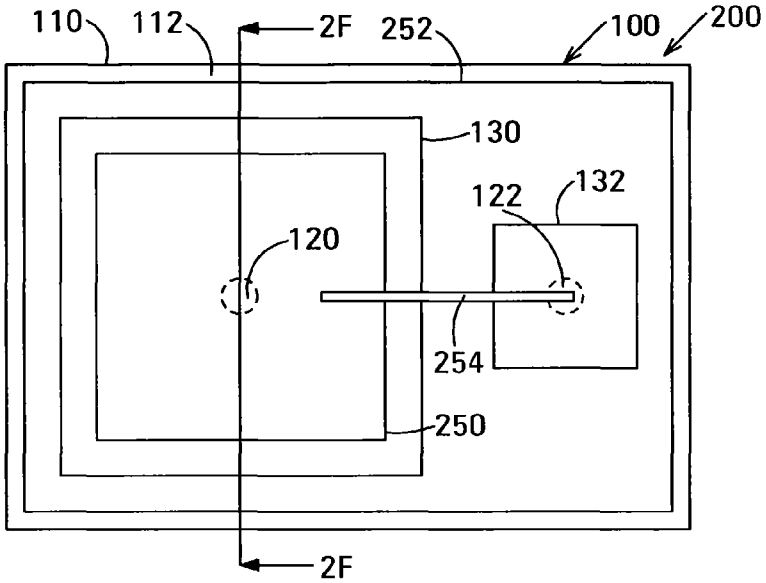

FIG.2D

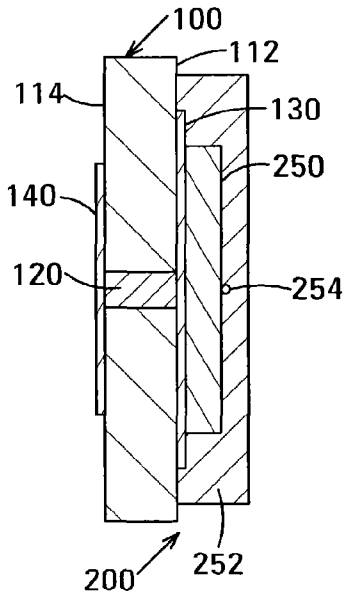

FIG.2E

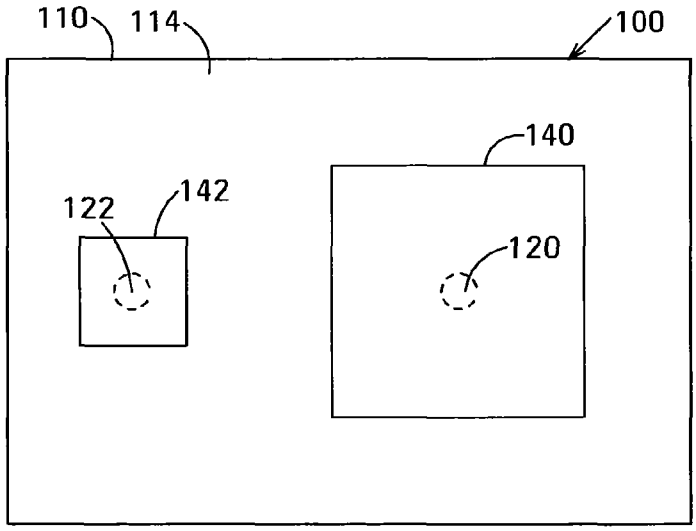

FIG.2F

DOCKET ALARM

Explore Litigation Insights

Docket Alarm provides insights to develop a more informed litigation strategy and the peace of mind of knowing you're on top of things.

Real-Time Litigation Alerts

Keep your litigation team up-to-date with **real-time alerts** and advanced team management tools built for the enterprise, all while greatly reducing PACER spend.

Our comprehensive service means we can handle Federal, State, and Administrative courts across the country.

Advanced Docket Research

With over 230 million records, Docket Alarm's cloud-native docket research platform finds what other services can't. Coverage includes Federal, State, plus PTAB, TTAB, ITC and NLRB decisions, all in one place.

Identify arguments that have been successful in the past with full text, pinpoint searching. Link to case law cited within any court document via Fastcase.

Analytics At Your Fingertips

Learn what happened the last time a particular judge, opposing counsel or company faced cases similar to yours.

Advanced out-of-the-box PTAB and TTAB analytics are always at your fingertips.

API

Docket Alarm offers a powerful API (application programming interface) to developers that want to integrate case filings into their apps.

LAW FIRMS

Build custom dashboards for your attorneys and clients with live data direct from the court.

Automate many repetitive legal tasks like conflict checks, document management, and marketing.

FINANCIAL INSTITUTIONS

Litigation and bankruptcy checks for companies and debtors.

E-DISCOVERY AND LEGAL VENDORS

Sync your system to PACER to automate legal marketing.