UNITED STATES DEPARTMENT OF COMMERCE
Patent and Trademark Office
Address: COMMISSIONER OF PATENTS AND TRADEMARKS
Washington, D.C. 20231

SERIAL NUMBER	FILING DATE	FIRST NAMED INVENTOR	ATTORNEY DOCKET NO.
08/411,369	03/27/95	BERETTA	G 10940893

E6M1/1118

RECORDS MANAGER
LEGAL DEPARTMENT 20BO
HEWLETT PACKARD COMPANY
P O BOX 10301
PALO ALTO CA 94303-0890

EXAMINER	
JOHNSON, D	
ART UNIT	**PAPER NUMBER**
2616	3

DATE MAILED: 11/18/96

This is a communication from the examiner in charge of your application.
COMMISSIONER OF PATENTS AND TRADEMARKS

☒ This application has been examined ☐ Responsive to communication filed on _____ ☐ This action is made final.

A shortened statutory period for response to this action is set to expire 3 month(s), 0 days from the date of this letter. Failure to respond within the period for response will cause the application to become abandoned. 35 U.S.C. 133

Part I THE FOLLOWING ATTACHMENT(S) ARE PART OF THIS ACTION:

1. ☒ Notice of References Cited by Examiner, PTO-892.
2. ☒ Notice of Draftsman's Patent Drawing Review, PTO-948.
3. ☒ Notice of Art Cited by Applicant, PTO-1449.
4. ☐ Notice of Informal Patent Application, PTO-152.
5. ☐ Information on How to Effect Drawing Changes, PTO-1474..
6. ☐ _____.

Part II SUMMARY OF ACTION

1. ☒ Claims 1-36 are pending in the application.

   Of the above, claims _____ are withdrawn from consideration.

2. ☐ Claims _____ have been cancelled.
3. ☐ Claims _____ are allowed.
4. ☒ Claims 1-36 are rejected.
5. ☐ Claims _____ are objected to.
6. ☐ Claims _____ are subject to restriction or election requirement.
7. ☐ This application has been filed with informal drawings under 37 C.F.R. 1.85 which are acceptable for examination purposes.
8. ☐ Formal drawings are required in response to this Office action.
9. ☐ The corrected or substitute drawings have been received on _____. Under 37 C.F.R. 1.84 these drawings are ☐ acceptable; ☐ not acceptable (see explanation or Notice of Draftsman's Patent Drawing Review, PTO-948).
10. ☐ The proposed additional or substitute sheet(s) of drawings, filed on _____. has (have) been ☐ approved by the examiner; ☐ disapproved by the examiner (see explanation).
11. ☐ The proposed drawing correction, filed _____, has been ☐ approved; ☐ disapproved (see explanation).
12. ☐ Acknowledgement is made of the claim for priority under 35 U.S.C. 119. The certified copy has ☐ been received ☐ not been received ☐ been filed in parent application, serial no. _____ ; filed on _____.
13. ☐ Since this application apppears to be in condition for allowance except for formal matters, prosecution as to the merits is closed in accordance with the practice under Ex parte Quayle, 1935 C.D. 11; 453 O.G. 213.
14. ☐ Other

EXAMINER'S ACTION

PTOL-326 (Rev. 2/93)

HUAWEI EX. 1016 - 457/714

Copy

DETAILED ACTION

Claim Rejections - 35 USC § 112

1. Claims 25-36 are rejected under 35 U.S.C. 112, second paragraph, as being indefinite for failing to particularly point out and distinctly claim the subject matter which applicant regards as the invention. The claims refer to the JPEG compression standard. However, the specification does not indicate which JPEG compression standard is being referenced. Unless the date and citation number of the standard are provided the claims will remain indefinite due to the indefinite reference.

Claim Rejections - 35 USC § 103

2. The following is a quotation of 35 U.S.C. 103(a) which forms the basis for all obviousness rejections set forth in this Office action:

> (a) A patent may not be obtained though the invention is not identically disclosed or described as set forth in section 102 of this title, if the differences between the subject matter sought to be patented and the prior art are such that the subject matter as a whole would have been obvious at the time the invention was made to a person having ordinary skill in the art to which said subject matter pertains. Patentability shall not be negatived by the manner in which the invention was made.

3. Claims 1-3, 5-9, 14-17, 20-24, 29, and 34-36 are rejected under 35 U.S.C. 103(a) as being unpatentable over Sugiura (5,465,164) in view of Agarwal (5,488,570).

As to representative claims 14 and 15, and claims 1-3, 5-9, 29 and 34-36, Sugiura teaches a method of compressing and transmitting images which produces decompressed images having improved text and image quality, the method comprising:

compressing a source image into compressed image data using a first quantization table (Qe) (Quantization Table 105 of fig. 1);

forming a second quantization table (Qd), wherein the second quantization table is related to the first quantization table (Inverse Quantization Table 115 of fig. 1);

transmitting the compressed image data (Interfaces 109 and 111, Communications Circuit 110 of fig. 1);

decompressing the compressed image data using the second quantization table Qd (Inverse Quantization 114 and Inverse Quantization Table 115 of fig. 1).

Sugiura does not explicitly teach that the second quantization table is related to the first quantization table scaled in accordance with a predetermined function of the energy in a reference image and the energy in a scanned image. Agarwal teaches decompressing (decoding) a second video frame by relating (comparing) the energy of the scanned image (block of the encoded second video frame) to the energy of a reference image (corresponding to the scaled quantization level for the block where the energy for the quantization level is selected in accordance with training video frames) (col. 1, lines 35-60). It would have been obvious to a person of ordinary skill in the art at the time of the invention for Sugiura to decompress using a quantization table scaled in accordance with a predetermined function of the energy in a reference image and the energy in a scanned image as taught by Agarwal in order to decrease quantization errors.

As to claims 16 and 17, Sugiura teaches that the second quantization table (Inverse Quantization Table) is determined independent of the order of transmission (fig. 1). It would

have been obvious to a person of ordinary skill in the art at the time of the invention to scale prior or subsequent to the transmission step since the second quantization table is determined independent of the order of transmission.

As to claims 20-23, selecting a target image; rendering the target image into an image file; the target image having elements critical to the quality of the image are inherent in using a reference to control the quality of the compression process. Images which have text including text with a serif font are well known in the art (official notice).

As to claim 24, in using a reference image to control the quality of the compression process of a scanned image it would have been obvious to a person of ordinary skill in the art at the time of the invention that scanned image could be the reference image since the reference image is readily available to be a scanned image and would serve as a check of the quality assurance steps.

4. Claims 4, 10-13, 18, 25-28, and 30-33 are rejected under 35 U.S.C. 103(a) as being unpatentable over Sugiura (5,465,164) and Agarwal (5,488,570) as applied above, further in view of Tzou (4,776,030).

As to representative claim 18, and claims 4, 10-13, 25-28, and 30-33, Sugiura does not explicitly teach use of the variance in the scaling factor to reduce the quantization error. Tzou teaches that in an adaptive system the quantization of an image is ordered according to the variance of the image coefficients to reduce quantization error (col. 2, lines 21-42). It would have been obvious to a person of ordinary skill in the art at the time of invention to use the image

variances as taught by Tzou with the reference and scanned image to arrive at the scaling factor of Sugiura and Agarwal in order to reduce quantization error.

5. Claim 19 is rejected under 35 U.S.C. 103(a) as being unpatentable over Sugiura (5,465,164) and Agarwal (5,488,570), further in view of Applicant's admissions of the prior art.

As to claim 19, Sugiura and Agarwal do not explicitly teach encapsulating the second quantization table Qd with the compressed image data to form an encapsulated data file; and transmitting the data file. Applicant admits that the prior art teaches that the data includes the quantization tables for use in the decompression process (p. 5, lines 1-6). It would have been obvious to a person of ordinary skill in the art to include the quantization table which will be used in the decompression process in the transmitted data file as taught by the prior art for the data file of Sugiura and Agarwal where the second quantization table would be used to decompress.

Conclusion

6. Any inquiry concerning this communication or earlier communications from the examiner should be directed to Brian Johnson whose telephone number is (703) 305-3865. The examiner can normally be reached on Monday-Thursday from 7:30 AM to 5:00 PM. The examiner can also be reached on alternate Fridays.

If attempts to reach the examiner by telephone are unsuccessful, the examiner's supervisor, Leo H. Boudreau, can be reached on (703) 305-4706.

Any inquiry of a general nature or relating to the status of this application should be directed to the Group receptionist whose telephone number is (703) 305-4700.

Brian L. Johnson
May 12, 1997

TO SEPARATE, HOLD TOP AND BOTTOM EDGES, SNAP–APART AND DISCARD CARBON

FORM PTO-892 (REV. 2-92) U.S. DEPARTMENT OF COMMERCE PATENT AND TRADEMARK OFFICE

NOTICE OF REFERENCES CITED

SERIAL NO.	GROUP ART UNIT	ATTACHMENT TO PAPER NUMBER
08/411369	~~2712~~ 2618	3

APPLICANT(S): Beretta, et al

U.S. PATENT DOCUMENTS

*		DOCUMENT NO.	DATE	NAME	CLASS	SUB-CLASS	FILING DATE IF APPROPRIATE
	A	5465164	11/7/95	Sugiura	358	432	4/14/92
	B	4776030	10/4/88	Tzou	358	432	
	C	5488570	1/30/96	Agarwal	364	514R	11/24/93
	D						
	E						
	F						
	G						
	H						
	I						
	J						
	K						

FOREIGN PATENT DOCUMENTS

*		DOCUMENT NO.	DATE	COUNTRY	NAME	CLASS	SUB-CLASS	PERTINENT SHTS. DWG	PERTINENT PP. SPEC.
	L								
	M								
	N								
	O								
	P								
	Q								

OTHER REFERENCES (Including Author, Title, Date, Pertinent Pages, Etc.)

R

S

T

U

EXAMINER: Brian Johnson | DATE: 11/5/96

* A copy of this reference is not being furnished with this office action.
(See Manual of Patent Examining Procedure, section 707.05 (a).)

HUAWEI EX. 1016 - 462/714

US005465164A

United States Patent [19]

Sugiura et al.

[11] Patent Number: 5,465,164

[45] Date of Patent: Nov. 7, 1995

[54] **IMAGE PROCESSING METHOD AND DEVICE FOR THE SAME**

[75] Inventors: **Susumu Sugiura**, Atsugi; **Yoshinobu Mita**, Kawasaki, both of Japan

[73] Assignee: **Canon Kabushiki Kaisha**, Tokyo, Japan

[21] Appl. No.: **868,103**

[22] Filed: **Apr. 14, 1992**

[30] **Foreign Application Priority Data**

Apr. 15, 1991 [JP] Japan 3-082403
Apr. 8, 1992 [JP] Japan 4-087114

[51] **Int. Cl.**[6] **H04N 1/41**

[52] **U.S. Cl.** **358/448**; 358/432; 358/458; 348/384

[58] **Field of Search** 358/448, 458, 358/433, 56, 80, 133, 135, 136, 500, 528, 434, 527, 138, 56, 426, 261.3, 261.4, 432, 479, 909, 13, 85, 209

[56] **References Cited**

U.S. PATENT DOCUMENTS

4,780,761	10/1988	Daly et al.	358/133
4,782,398	11/1988	Mita	358/280
4,905,294	2/1990	Sugiura	382/9
4,974,078	11/1990	Tsai	358/133
4,984,076	1/1991	Watanabe et al.	358/133
5,060,280	10/1991	Mita et al.	382/33
5,073,820	12/1991	Nakagawa et al.	358/133
5,079,621	1/1992	Daly et al.	358/13
5,142,380	8/1992	Sakagami et al.	358/432
5,189,530	2/1993	Fujii	358/458
5,216,516	6/1993	Tanaka et al.	358/426
5,216,712	6/1993	Shimada et al.	358/133 X
5,223,926	6/1993	Stone et al.	358/133
5,251,020	10/1993	Sugiyama	358/500
5,253,055	10/1993	Civanlar et al.	358/133
5,260,808	11/1993	Fujii	358/458

FOREIGN PATENT DOCUMENTS

416918	3/1991	European Pat. Off.	H04N 7/13

OTHER PUBLICATIONS

Leger et al., "Still Picture Compression Algorithms Evaluated for International Standardisation", IEEE Global Telecommunications Conference vol. 2, pp. 1028–1032 (Nov. 1988).

Groll et al., "Using the 8 bit CCIR Recommendation 601 Digital Interface", IBC Int'l, Broad Jayant et al., Digital Coding of Waveforms, Prentice Hall, pp. 351–371 (1984).

Primary Examiner—Paul Ip

Attorney, Agent, or Firm—Fitzpatrick, Cella, Harper & Scinto

[57] **ABSTRACT**

Disclosed is an image processing device which comprises a conversion means for converting an image data to a space frequency component, a quantization means for quantizing the space frequency component converted by the conversion means, and a control means for controlling the quantization means so that a quantization error produced when the converted space frequency component is quantized by the quantization means is diffused to nearby space frequency components.

9 Claims, 10 Drawing Sheets

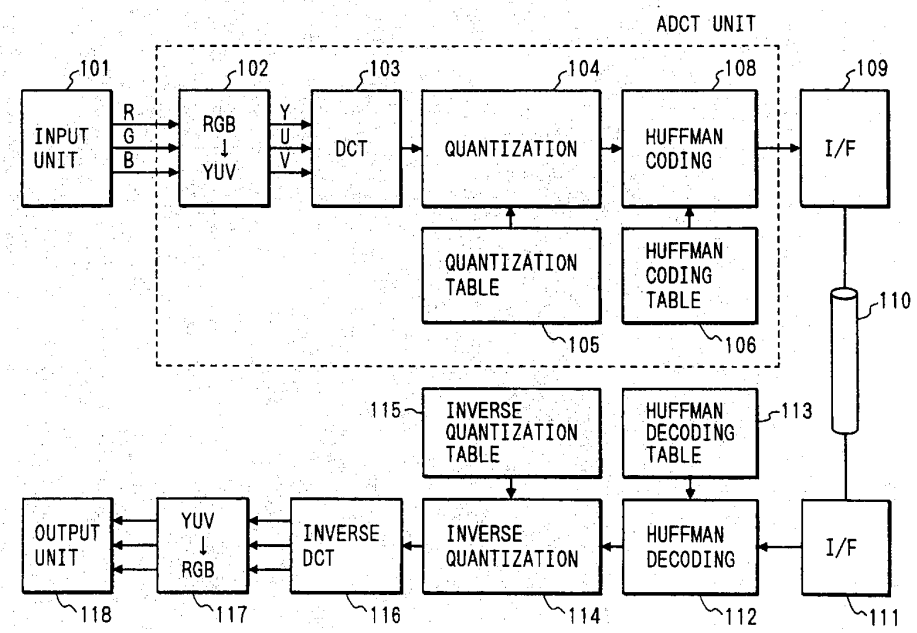

HUAWEI EX. 1016 - 463/714

350-432 AU 2512 EX
00020 XP 5,465,164

UNITED STATES PATENT AND TRADEMARK OFFICE

CERTIFICATE OF CORRECTION

PATENT NO. : 5,465,164
DATED : November 7, 1995
INVENTOR(S) : Susumu SUGIURA, et al.

It is certified that error appears in the above-indentified patent and that said Letters Patent is hereby corrected as shown below:

IN THE DRAWINGS

Sheet 7

Figure 8A, "ERRER" should read --ERROR-- (both occurrences).

Column 1

Line 43, "an" should be deleted.

Column 2

Line 67, "main" should read --the main--.

Column 3

Line 8, "reminder" should read --remainder--.
Line 40, "reminder" should read --remainder--.
Line 49, "reminder" should read --remainder--.

Column 4

Line 13, "dominator" should read --denominator--.

UNITED STATES PATENT AND TRADEMARK OFFICE

CERTIFICATE OF CORRECTION

PATENT NO. : 5,465,164
DATED : November 7, 1995
INVENTOR(S) : Susumu SUGIURA, et al.

It is certified that error appears in the above-indentified patent and that said Letters Patent is hereby corrected as shown below:

Column 5

Line 53, "corresponds" should read --corresponds to--.

Column 7

Line 7, "values" should read --value--.

Column 8

Line 54, "step" should read --steps--.

Signed and Sealed this

Fourteenth Day of May, 1996

Attest:

BRUCE LEHMAN

Attesting Officer

Commissioner of Patents and Trademarks

FIG. 1

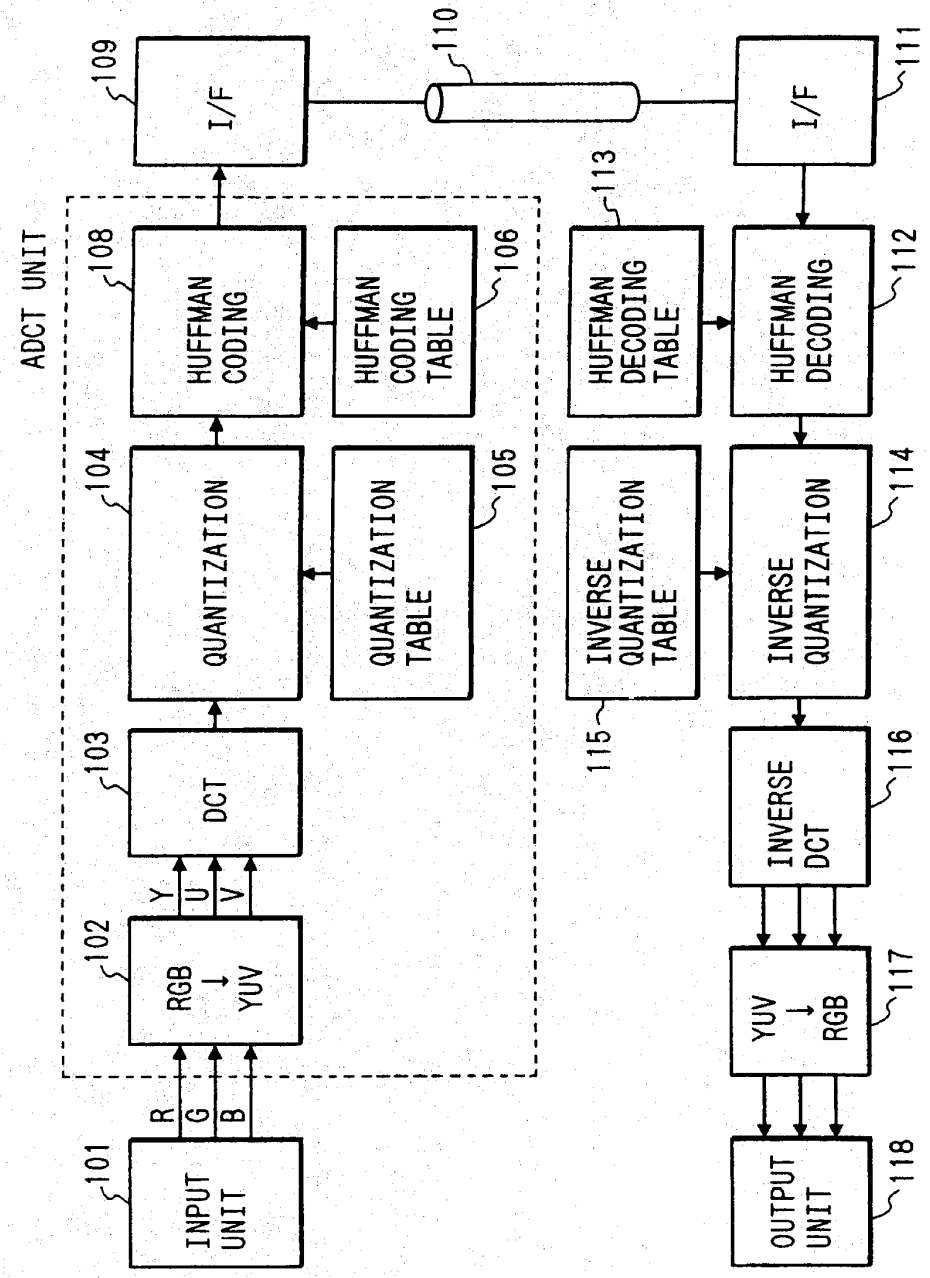

HUAWEI EX. 1016 - 466/714

FIG. 2A

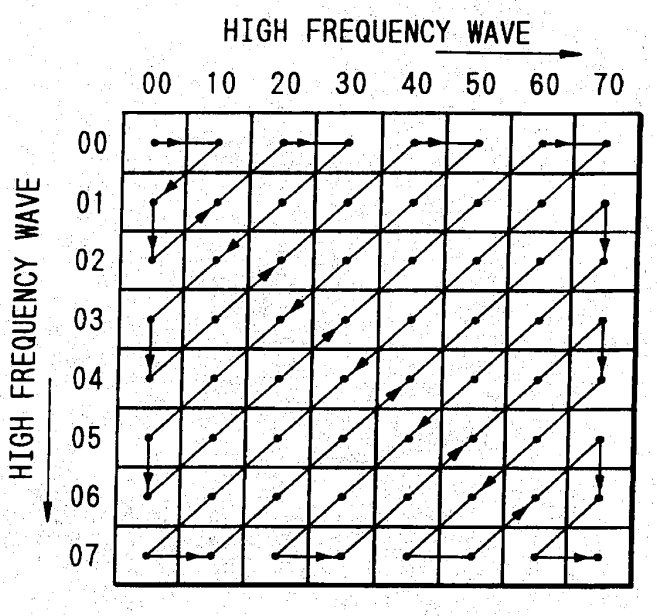

FIG. 2B

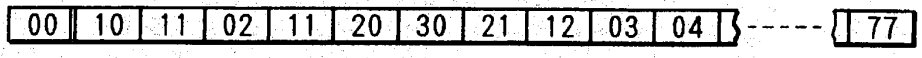

FIG. 3A

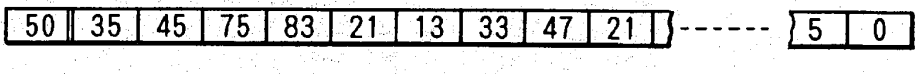

FIG. 3B

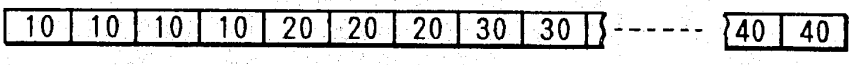

FIG. 3C

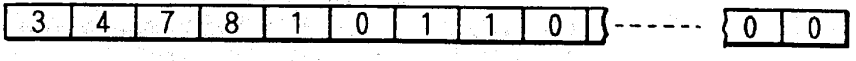

FIG. 4A

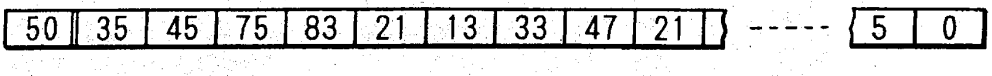

FIG. 4B

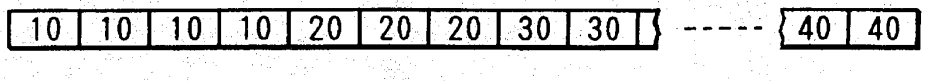

FIG. 4C

FIG. 4D

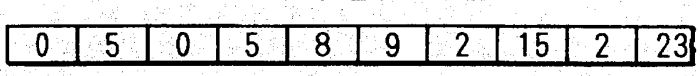

FIG. 4E

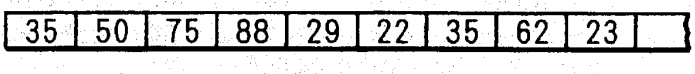

FIG. 5

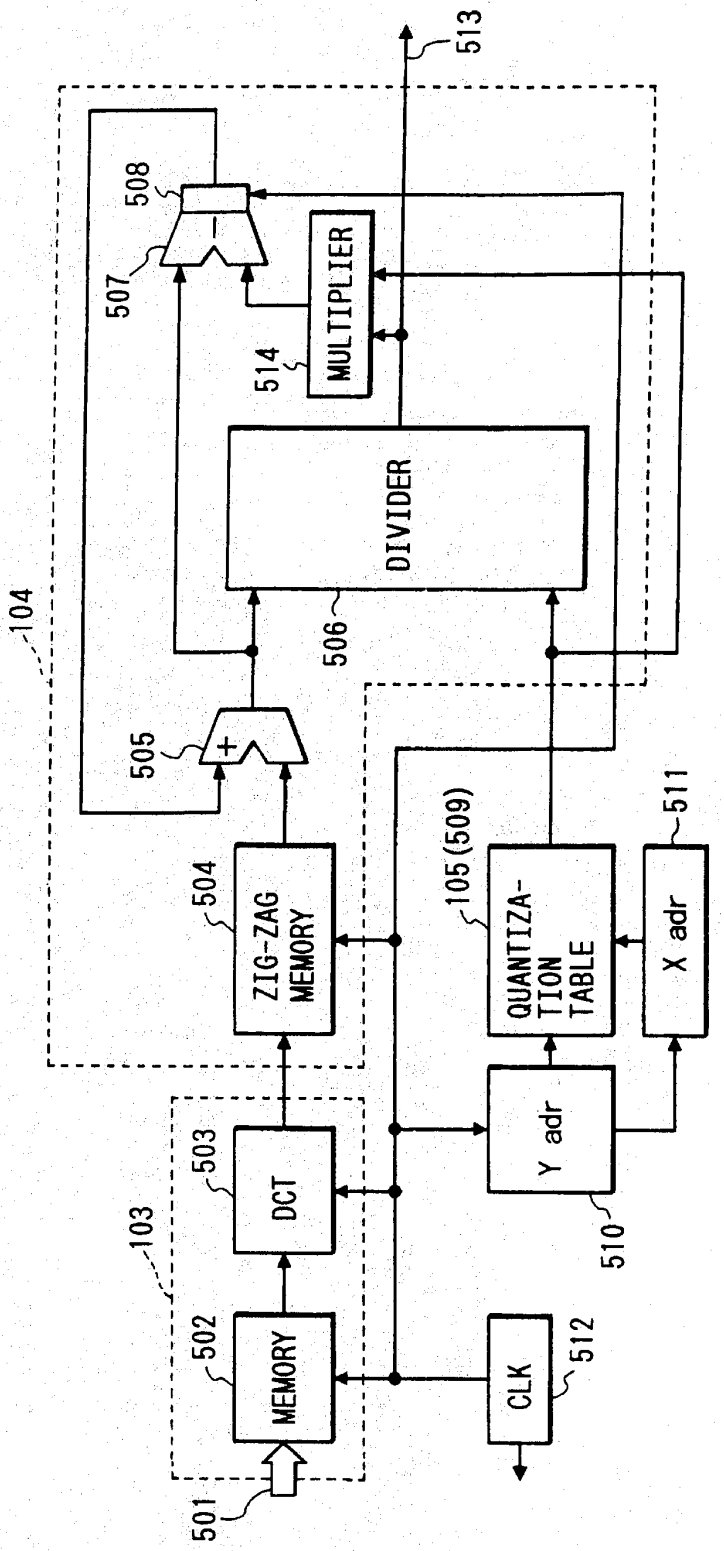
513
508
507
MULTIPLIER
514
DIVIDER
506
104
505
504
ZIG-ZAG MEMORY
105 (509)
QUANTIZA-TION TABLE
511
X adr
Y adr
510
503
DCT
103
502
MEMORY
CLK
512
501

FIG. 6

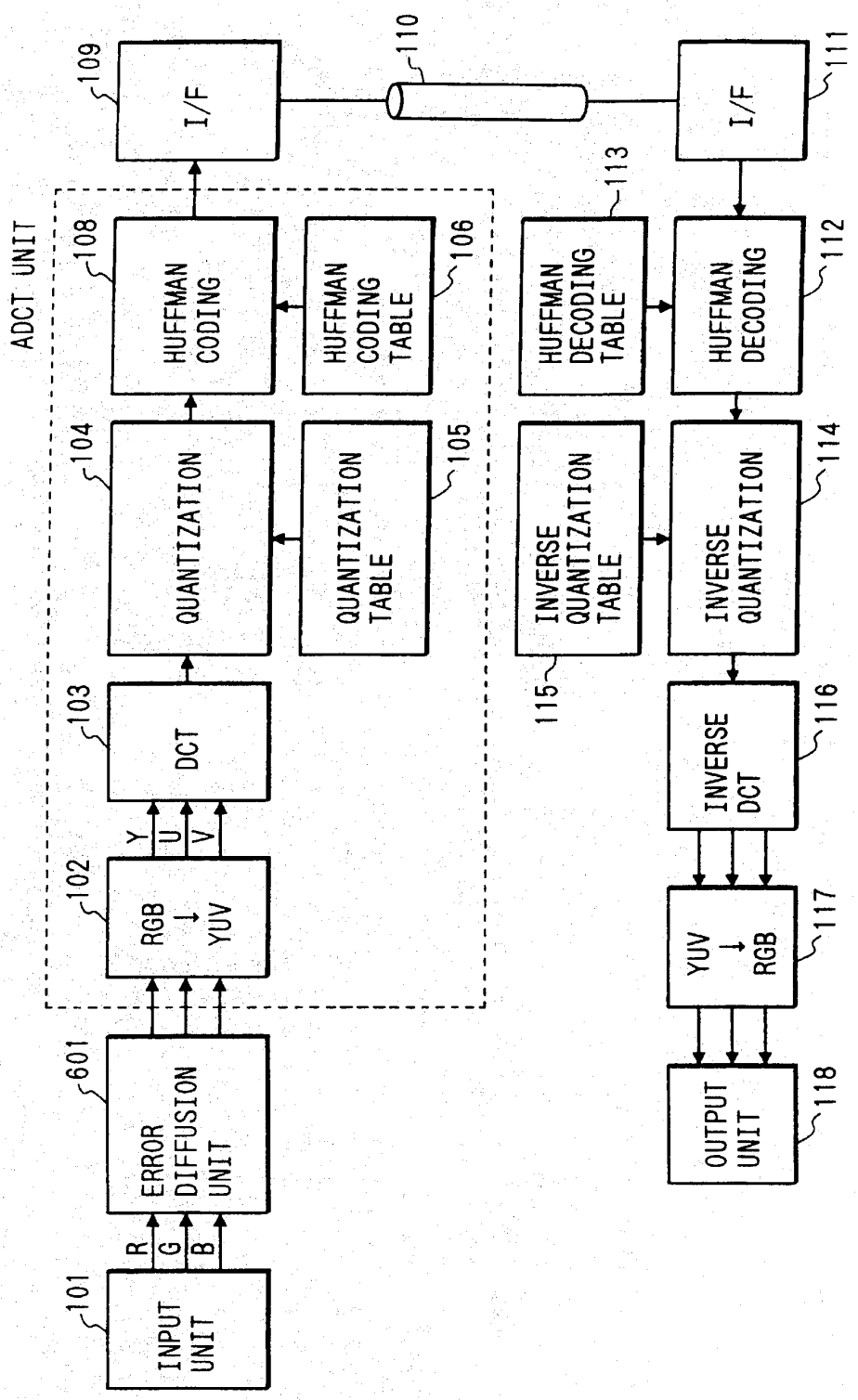

HUAWEI EX. 1016 - 470/714

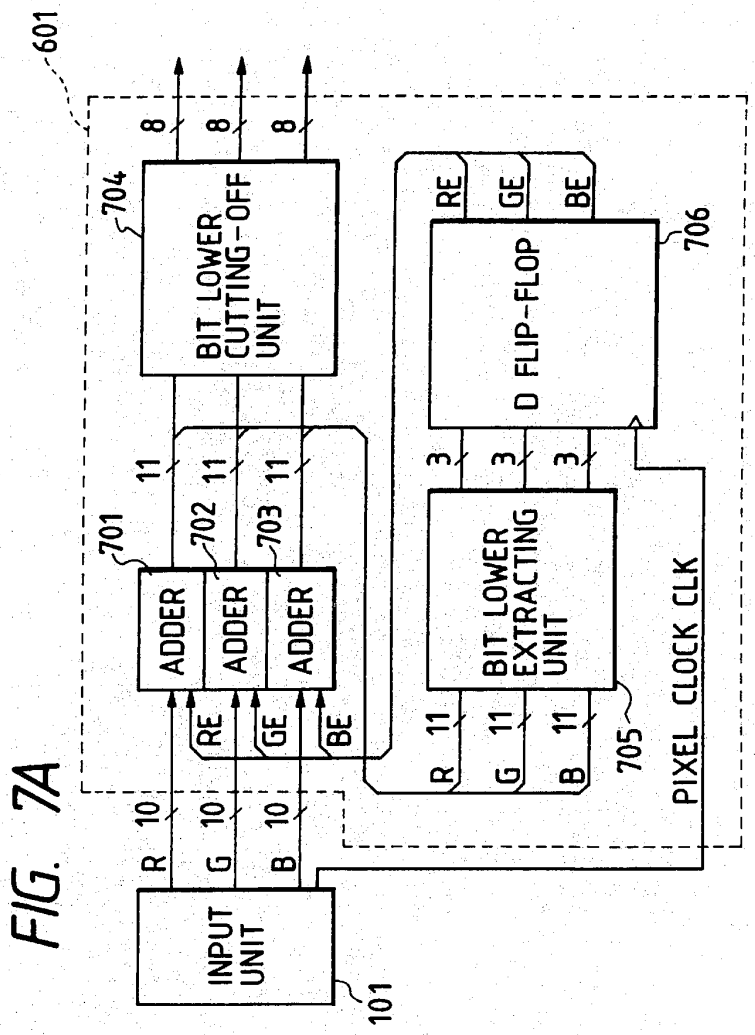
601
8
8
8
704
BIT LOWER CUTTING-OFF UNIT
RE
GE
BE
706
D FLIP-FLOP
11
11
11
3
3
3
701
702
703
ADDER
ADDER
ADDER
BIT LOWER EXTRACTING UNIT
RE
GE
BE
R 11
G 11
B 11
705
PIXEL CLOCK CLK
10
10
10
R
G
B
INPUT UNIT
101

FIG. 7A

SUBJECT PIXEL
RE

FIG. 7B

FIG. 8A

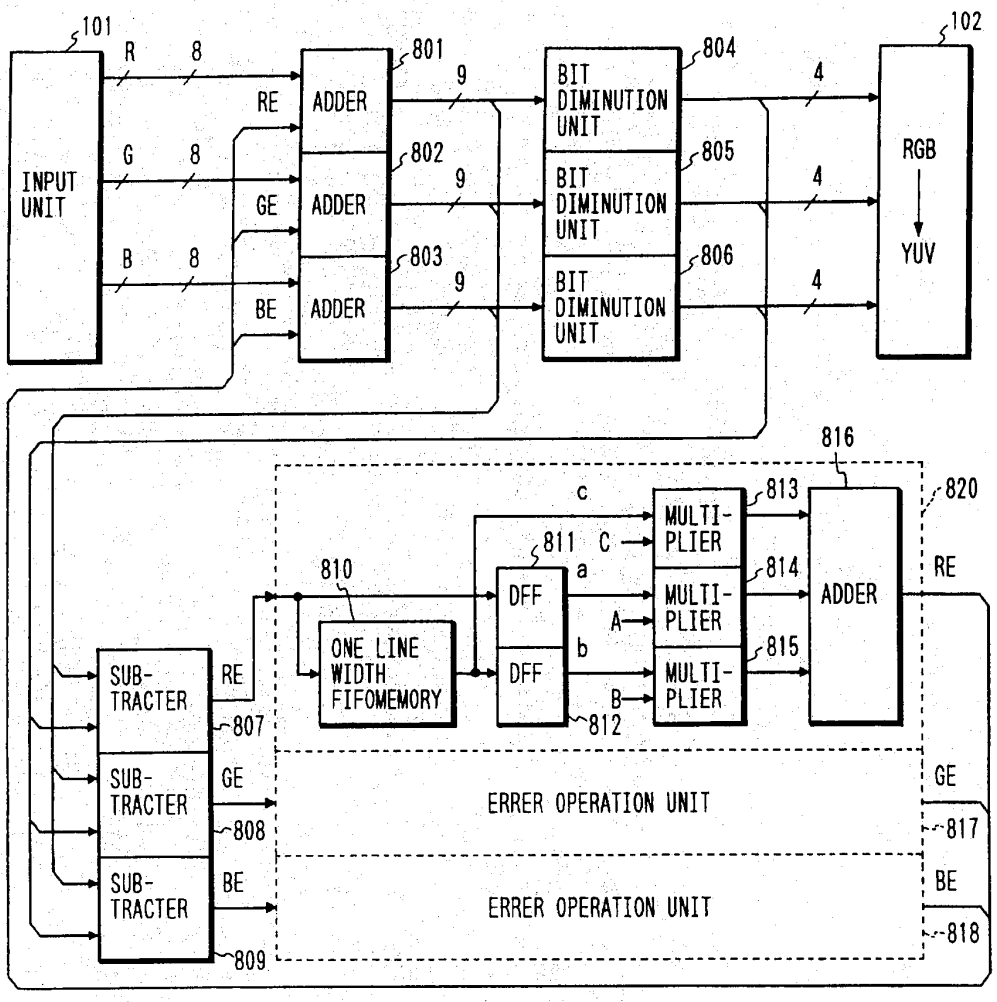

HUAWEI EX. 1016 - 472/714

FIG. 8B

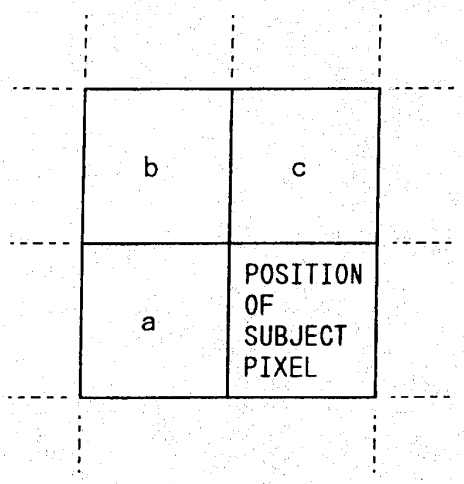

FIG. 8C

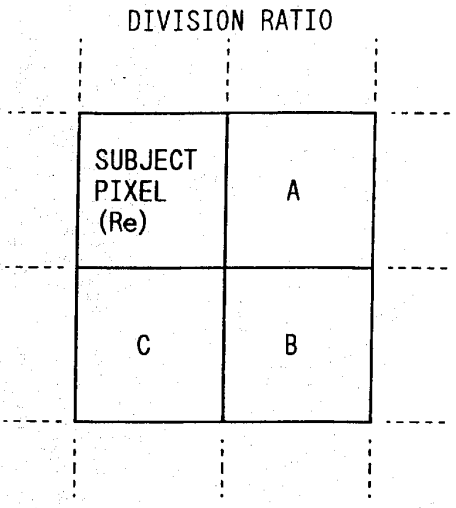

$$EX \begin{pmatrix} A \\ B \\ C \end{pmatrix} = \begin{pmatrix} 0.4 \\ 0.2 \\ 0.4 \end{pmatrix}$$

FIG. 8D

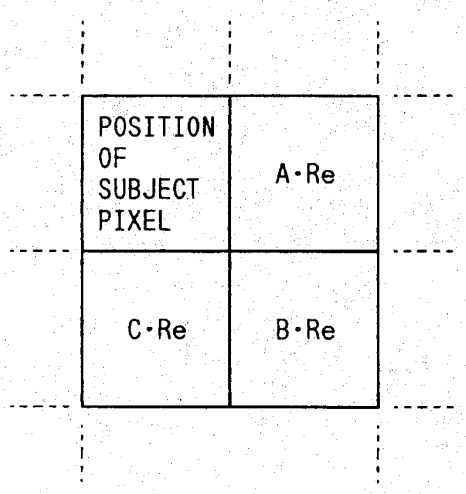

FIG. 8E

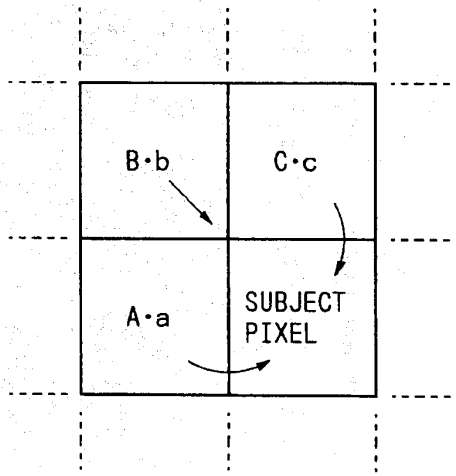

FIG. 9B

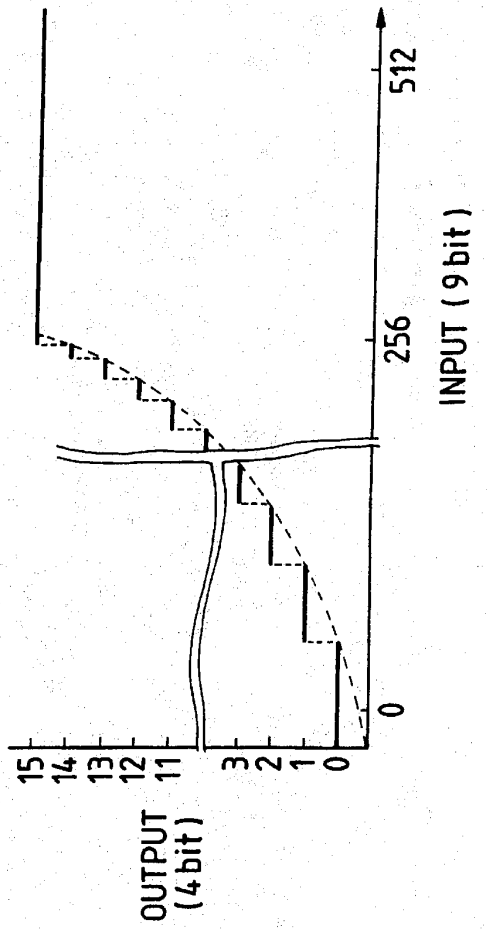
512
256
0
INPUT (9 bit)
15
14
13
12
11
3
2
1
0
OUTPUT
(4 bit)

FIG. 9A

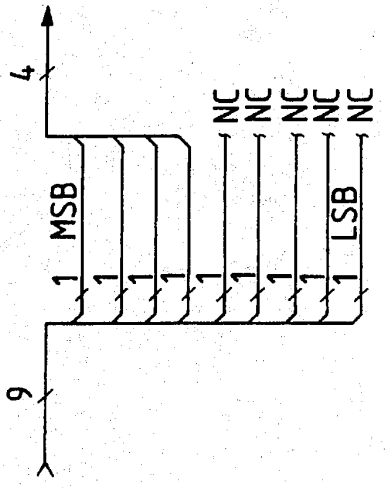
4
9
1 MSB
1
1
1
1
1
1
1
1
1 LSB
NC
NC
NC
NC
NC

FIG. 10

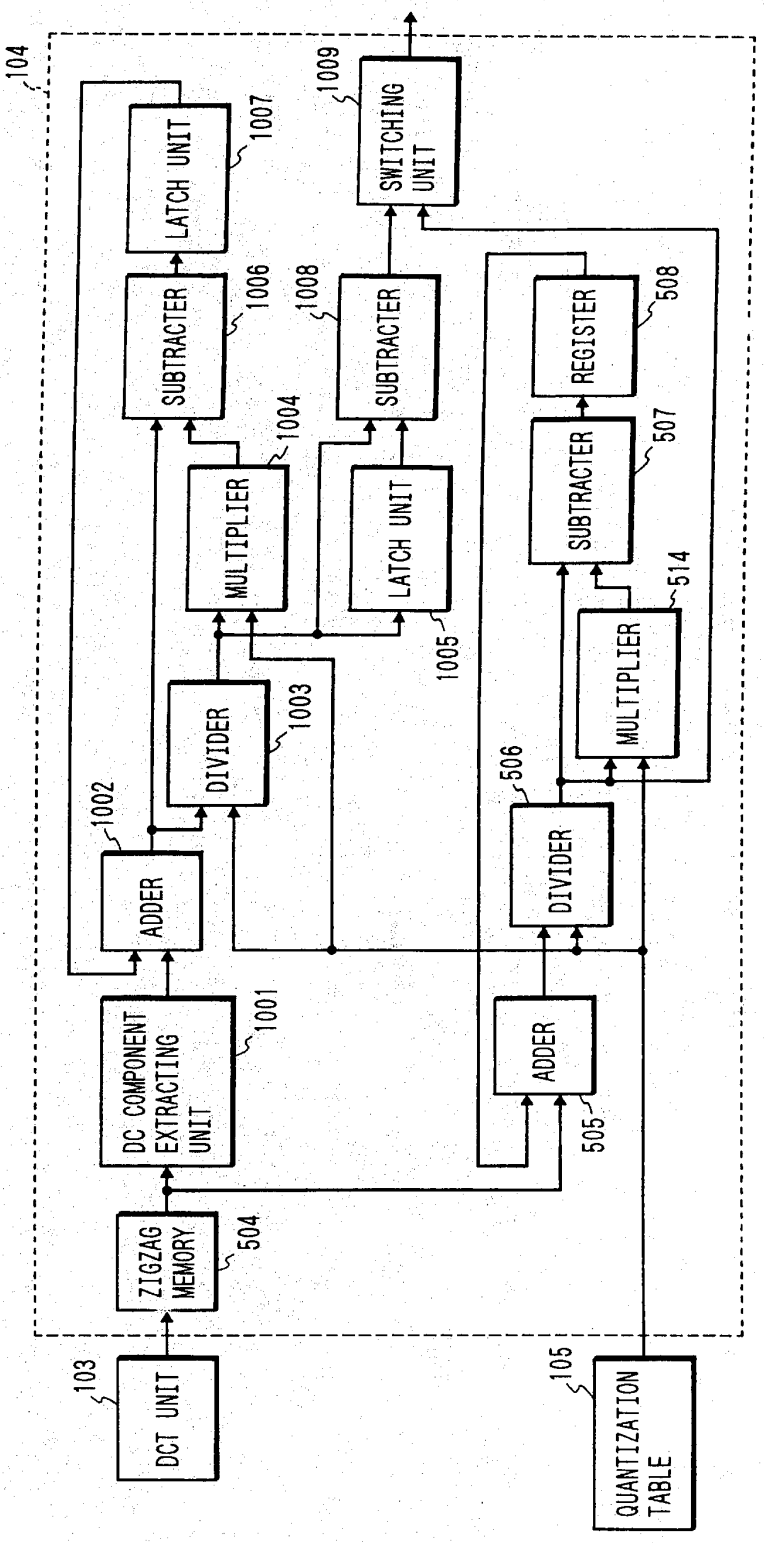

HUAWEI EX. 1016 - 475/714

IMAGE PROCESSING METHOD AND DEVICE FOR THE SAME

BACKGROUND OF THE INVENTION

1. Field of the Invention

The present invention relates to an image processing method and device for the same by which image data is quantized.

2. Related Background Art

At present, an Adaptive Discrete Cosine Transform ADCT (Adaptivraphic Expert Group) system is intended to be standardized as a compression system of a multi-value image data by JPEG (Joint Photographic Expert Group).

Also, it is contemplated to use the ADCT system in the field of a color image communication, in particular, in the field of a color facsimile.

Nevertheless, the above ADCT system has been studied to be applied to an image having the relatively small number of pixels such as an image on a CRT.

Therefore, the application of the ADCT system, as it is, to a field such as the color facsimile requiring a high resolution gives rise to a new problem. More specifically, when the ADCT system is employed for the color facsimile, as it is, a deterioration of image quality such as shade off, dislocation and spread of color is caused in the field of fine lines of characters, graphics and the like.

Further, when data compressed by the ADCT system is compared with data prior to compression, density is not preserved and thus image quality is deteriorated.

SUMMARY OF THE INVENTION

Taking the above problems into consideration, a first object of the present invention is to provide an image processing method and a device for the same by which image quality can be improved.

Another object of the present invention is to provide an image processing method and a device for the same by which a quantized error produced in quantization is reduced.

To achieve the above objects, according to a preferred embodiment of the present invention, there is disclosed an image processing device which comprises a conversion means for converting an image data to a space frequency component, a quantization means for quantizing the space frequency component converted by the conversion means, and a control means for controlling the quantization means so that a quantization error produced when the converted space frequency component is quantized by the quantization means is diffused to nearby space frequency components.

Further, the present invention has another object for further improving an image compression method referred to as ADCT.

Furthermore, the present invention has a further object for providing an image processing method and device for the same by which a compression ratio as well as image quality are improved.

Other objects and advantages of the present invention will become apparent from the following embodiments when taken in conjunction with the description of the accompanying drawings.

BRIEF DESCRIPTION OF THE DRAWINGS

FIG. 1 is a block diagram showing the arrangement of an embodiment according to the present invention;

FIGS. 2A and 2B are diagrams showing a zig-zag scanning;

FIGS. 3A–3C are diagrams showing a conventional quantization method;

FIGS. 4A–4E are diagrams showing a quantization method according to the present invention;

FIG. 5 is a block diagram showing a characteristic portion of the present invention;

FIG. 6 is a diagram showing a second embodiment of the present invention;

FIGS. 7A and 7B are diagrams showing an embodiment embodying an error diffusion unit **601**;

FIGS. 8A–8E are diagrams showing another embodiment embodying the error diffusion unit **601**;

FIGS. 9A and 9B are diagrams explaining the content of a bit diminution unit; and

FIG. 10 is a diagram showing the arrangement of a third embodiment according to the present invention.

DETAILED DESCRIPTION OF PREFERRED EMBODIMENTS

FIG. 1 is a block diagram showing an embodiment of an image processing device according to the present invention, wherein **101** designates an image input unit composed, for example, of a color scanner arranged as CCD line sensors for R, G, B; **102** designates a color component conversion unit for converting R, G, B signals of each pixel produced in the image input unit **101** to YUV (lightness, chromaticness and hue) component signals; and **103** designates a DCT circuit for causing each component signal of YUV to be subjected to a discrete cosine conversion to thereby perform an orthogonal conversion from a true space component to a frequency space component; **104** designates a quantization unit for quantizing the orthogonally converted space frequency component by a quantization coefficient stored in a quantization table **105**; **107** designates a line through which two-dimensional block data, which is quantized and made to linear data by zig-zag scanning, is transmitted; **108** designates a Huffman coding circuit having a DC component composed of category information and a data value obtained from a difference signal and an AC component classified to categories based on the continuity of zero and thereafter provided with a data value; **106** designates a Huffman coding table wherein a document appearing more frequently is set to a shorter code length; and **109** designates an interface with a communication line through which a compressed image data is transmitted to a circuit **110**.

On the other hand, data is received by an I/F **111** on a receiving side through a process completely opposite to that when the compressed data is transmitted. More specifically, the data is Huffman decoded by a Huffman decoding unit **112** in accordance with a coefficient set from a Huffman decoding table **113** arranged in the same way as that of the Huffman coding table **106** and then inverse quantized by an inverse quantizing unit **114** in accordance with a coefficient set from an inverse quantizing table **115**. Next, the thus obtained data is inverse DCT converted by an inverse DCT conversion unit **116** and converted from the YUV color components to the RGB color components by a color component conversion unit **117** so that a color image is formed by an image output unit **118**. The image output unit **118** can provide a soft copy such as a display and the like and a hard copy printed by a laser beam printer, ink jet printer and the like.

Although the above deterioration of image quality is caused by various factors, one of main factors is contem-

HUAWEI EX. 1016 - 476/714

plated to be that an error (remainder) produced in quantization performed by a quantization table following to a processing performed by DCT is cut off.

The present invention is devised to preserve the error amount as effectively as possible to thereby prevent the deterioration of image quality as much as possible.

Thus, according to embodiments of the present invention, a reminder or error produced when quantization is performed by a quantization table is multi-dimensionally diffused to nearby frequency components to keep the frequency components of an original image as much as possible so that an image with less deteriorated quality can be reproduced.

A DCT portion as a main portion of the present invention will be further described here prior to the description of the characteristic portion of the embodiments of the present invention.

FIG. **2A** shows an arrangement of frequency component values subjected to a discrete cosine conversion of 8×8 which is a base of the DCT portion. Although this arrangement is basically a two-dimensional frequency structure, it can be made to a linear frequency arrangement by a zig-zag scanning, as shown in FIG. **2B**. In FIG. **2B**, a DC component, and linear frequency component up to n-dimensional frequency component are arranged from the left side thereof. Each numeral in FIG. **2B** is obtained by adding an address in a vertical direction and an address in a horizontal direction in FIG. **2A**, and thus these numerals in FIG. **2B** show an address and do not show a value of a frequency component.

FIGS. **3A–3C** show a conventional quantization system, and FIG. **3A** shows a value of a frequency component just after DCT and FIG. **3B** shows a quantization table. FIG. **3C** shows a result of quantization performed by using FIGS. **3A** and **3B**, wherein the values shown in FIG. **3A** are simply divided by the values shown FIG. **3B** and portions other than an integer portion are cut off, from which it is assumed that a considerable error is caused by the cutting off.

FIG. **4A–4E** show a portion of an embodiment of the present invention.

FIGS. **4A**, **4B** and **4C** correspond to FIGS. **3A**, **3B** and **3C**, respectively, and FIG. **4D** shows a reminder value after quantization has been performed. For example, since the data value of a first frequency component is 35 and a corresponding table value is 10, a value 3 is obtained after quantization and thus a remainder is 5. This remainder 5 is shown in the second box in FIG. **4D**. Therefore, a second frequency component 45 is made to 50 by being added with the remainder 5 in the previous frequency. Since this value 50 is divided by a table value 10, a quantized value of 5 is obtained with a reminder of 0. An image of good quality can be reproduced on a receiving side in such a manner that a frequency component loss caused by cutting off is reduced by diffusing a remaining error component to a nearby frequency component, as described above.

FIG. **5** shows a specific arrangement for performing the processing shown in FIG. **4**, wherein **501** designates color decomposition data of three colors YUV input from the color component conversion unit **102**; **502** designates a buffer memory composed, for example, of an FIFO for a plurality of lines for extracting data for each block of 8×8 pixel from the color decomposition data of the three colors; **503** designates a DCT conversion circuit, **504** designates a zig-zag memory for storing a space frequency component produced by being subjected to the discrete cosine conversion and further subjected to the zig-zag scanning conversion as described above; and **505** designates an adder for adding data from the zig-zag memory **504** with data delayed by a clock and supplied from a register **508** and outputting resultant data. This addition operation of the adder **505** corresponds to an addition operation of the remainder value and next data in FIG. **4**. The data from the adder **505** is divided by a divider **506** and only the integer portion of resultant data is output as **513**. Designated at **507** is a subtracter for subtracting a value obtained by multiplying data of **513** made to integer by a quantization coefficient (an output from a multiplier **514**) from data supplied from the adder **505** to thereby create remainder data. The remainder data calculated by the subtracter **507** is stored in the register **508** after delayed by a clock. On the other hand, a value of the dominator in the divider **506** is a memory portion in which quantization data stored in **509** is stored. Designated at **510** and **511** are address counters for extracting data from **509**. These address counters **510** and **511** are operated in synchronism with a clock from a clock generator **512** together with the buffer memory **502**, DCT conversion circuit **503**, memory **504**, and register **508**.

Note, although a system based on a linear error diffusion is described in the above example, it is apparent that the same effect can be obtained in such a manner that errors are two-dimensionally diffused about the line connecting the point **00**, **00** to the point **70**, **07** in FIG. **2A**, and this is also included in the present invention.

According to this embodiment, since a frequency component conventionally cut off by the DCT quantization portion is accumulated to a nearby frequency component and corrected, a reproduced image is less deteriorated and thus a reproduced image of good quality can be obtained. Moreover, since the basic requirements of the ADCT are observed, a special extension circuit is not required on a receiving side and thus this invention is expected to greatly contribute to a communication of a color image hereinafter.

Next, FIG. **6** is a block diagram showing another embodiment according to the present invention, wherein **101** designates an image input unit composed, for example, of a color scanner arranged as CCD line sensors for R, G, B.

An output from the image input unit **101** is processed in an error diffusion unit **601** such that the bit number of the image data in the input unit **101** is diminished and an error produced in the process of diminishing the bit number is diffused to some nearby pixels of a subject pixel. Therefore, an output from the error diffusion unit **601** is obtained in such a manner that a result obtained by diffusing the errors of the nearby pixels is added to the value of the subject pixel and the number of bits of the subject pixel is diminished. This output is processed such that the RGB signals thereof are converted to YUV (lightness, chromaticness, hue) component signals by a color component conversion unit **102**, next each component signal of the YUV is subjected to a discrete cosine conversion by a DCT circuit **103** and thus a true space component is orthogonally converted to a frequency space component. Designated at **104** is a quantization unit for quantizing the orthogonally converted space frequency component by a quantization coefficient stored in a quantization table **105**; **107** designates a line through which two-dimensional block data, which is quantized and made to linear data by zig-zag scanning, is transmitted; designated at **108** is a Huffman coding circuit having a DC component composed of category information and a data value obtained from a difference signal and an AC component classified to categories based on the continuity of zero and thereafter provided with a data value designated at **106** is a Huffman coding table wherein a document appearing more frequently is set to a shorter code length; and designated at **109** is an interface with a communication line

HUAWEI EX. 1016 - 477/714

through which a compressed image data is transmitted to a circuit **110**.

On the other hand, data is received by an I/F **111** on a receiving side through a process completely opposite to that when the compressed data is transmitted. More specifically, the data is Huffman decoded by a Huffman decoding unit **112** in accordance with a coefficient set from a Huffman decoding table **113** arranged in the same way as that of the Huffman coding table **106** and then inverse quantized by an inverse quantizing unit **114** in accordance with a coefficient set from an inverse quantizing table **115**. Next, the thus obtained data is inverse DCT converted by an inverse DCT conversion unit **116** and converted from the YUV color components to the RGB color components by a color component conversion unit **117** so that a color image is formed by an image output unit **118**. The image output unit **118** can provide a soft copy such as a display and the like and a hard copy printed by a laser beam printer, ink jet printer and the like.

Therefore, in this embodiment, an input image of high quality can be compressed by an ADCT conversion circuit without being affected by the number of bits of the input image in such a manner that the input image is read by the input unit **101**, the number of bits thereof is diminished without deteriorating the quality of the image by using an error diffusion method even if the number of quantized bits per pixel is increased and further the input image is subjected to an ADCT conversion. In addition, it is possible that the number of bits processed by the ADCT conversion circuit is made smaller than a usual number by diminishing the number of bits of an image data at the input unit to thereby make the scale of the ADCT conversion circuit smaller.

Further, the deterioration of image quality may be further restricted by using an improved ADCT shown in FIG. **5** in place of the ADCT unit shown in FIG. **6** and a quantization error produced after a DCT conversion is not cut off but effectively preserved by an error diffusion.

FIG. **7**A shows a first embodiment of the error diffusion unit **601**. Image data of 10 bits input to the error diffusion unit **601** are first input to adders **701**, **702** and **703** and added with diffusion errors of three color components output from a D-flipflop **706**. Therefore, the data outputs from the adders **701**, **702** and **703** have the number of bits up to 11 bits. The lower 3 bits of each of the outputs are cut off by a lower bit diminution unit **704** for cutting off bits and thus the output becomes a signal of 8 bits and supplied to a color component conversion unit **102**. Further, a lower bit extracting unit **705** extracts 3 bits having the same value as that cut off by the lower bit diminution unit **704** from each of the outputs of 11 bits supplied from the adders **701**, **702** and **703** and supplies the same to a D-flipflop **706**. Each of outputs from the lower bit extracting unit **705** corresponds the diminution of bits performed at the lower bit diminution unit **704** or an error itself produced in the quantization. A pixel clock CLK in synchronism with the outputs from the input unit **101** is supplied to the D-flipflop **706** and thus a delay of a pixel is performed. Therefore, respective color component quantization errors RE, GE, BE output from the D-flipflop **706** are input to the adders **701**, **702** and **703** together with pixel data spaced therefrom by a pixel and added therewith. Therefore, as shown in FIG. **7**B, since a subject pixel (pixel being processed) is added with a quantization error positioned in front of it by a pixel, it can preserve a gradation corresponding to 10 bits regardless of the subject pixel being quantized to 8 bits by the lower bit diminution unit **704**. To supplement the above description, an error produced by the cutting off process in the lower bit diminution unit **704** has a positive value. As a result, outputs from the adders have 11 bits without a sign.

FIG. **8**A shows a second embodiment of the error diffusion unit **601**. Image data of respective color components R, G, B each having 8 bits and input from the input unit **101** to the error diffusion unit **601** are first input to adders **801**, **802** and **803** and added with diffusion errors of three color components output from error operation units **820**, **817** and **818**. Therefore, the data outputs from the adders **801**, **802** and **803** have the number of bits up to 9 bits. The bits of these outputs are diminished by bit diminution units **804**, **805** and **806** and thus each of the outputs becomes a signal of 4 bits and is supplied to a color component conversion unit **102**.

Further, the outputs from the adders **801**, **802** and **803** are subtracted from the outputs from the bit diminution units **804**, **805** and **806** by subtracters **807**, **808** and **809** and thus data Re, Ge and Be can be obtained from errors **807**, **808** and **809**. Note that data from the bit diminution units **804**, **805** and **806** are added with "0" and are normalized to correspond to 9 bits. As shown in FIG. **8**C, these errors are divided to the circumference of the position of a subject pixel at division ratios of A, B and C, wherein (A, B, C) may be set, for example, to (0.4, 0.2, 0.4). Therefore, when errors produced in the circumference of the position of the subject pixel are assumed a, b and c as shown in FIG. **8**B, the errors of A·a, B·b and C·c are added to the position of the subject pixel around the circumference thereof by the adders **801**, **802** and **803**, as shown in FIG. **8**E. To supplement the above description, the error Re of the position of the subject pixel shown in FIG. **8**C is divided as A·Re, B·Re and C·Re to the positions in the circumference of the subject pixel as shown in FIG. **8**D.

Since the error operation units **820**, **817** and **818** for calculating the total of divided errors RE, GE, BE have the same arrangement, the error operation unit **820** will be described here. The error Re input to the error operation unit **820** is delayed by a pixel and by a horizontal line through a D-flipflop DFF **811** and one line width FIFO memory **810**, respectively and an output from the one line width FIFO memory **810** is further delayed by a pixel by a D-flipflop DFF **812**. Therefore, errors a, b and c in the circumferential positions of the subject error position are obtained from the D-flipflops DFF **811** and DFF **812** and one line width FIFO memory **810** and these errors a, b and c are multiplied by a division ratios A, B and C, respectively, by multipliers **814**, **815** and **813** and the total amount thereof A·a+B·b+C·c are calculated by an adder **816** to determine RE which is added with the value of the subject pixel by the adder **801**.

Next, operation of the bit diminution units **804**, **805** and **806** will be described. As shown in FIG. **9**A, a first example is a method of cutting off the lower 5 bits of an input signal of 9 bits and remains only the upper 4 bits thereof.

In a second example, the bit diminution unit is composed of a table using a ROM and RAM. FIG. **9**B shows an example of the content of the table, which nonlinearly shows the relationship between an input of 9 bits and an output of 4 bits. In this second example, data exceeding 255 represented by an input of 8 bits are rounded to a maximum value of 4 bits and thus an output of 4 bits can be effectively used without adversely affecting the process of the color component conversion unit **102** and the processes following to it. In the system shown in FIG. **9**A, however, the number of bits used is actually in the range of from 3 to 4 bits and thus this system is a little disadvantageous. Further, in FIG. **9**B, it is

HUAWEI EX. 1016 - 478/714

preferable that data converted to data of 4 bits does not exceed the value of input data when it is added with a bit "0" as it is and converted to 8 bits by normalization. With this arrangement, all the errors produced in the subtracters **807**, **808** and **809** have a positive value and the values output from the adders **801**, **802** and **803** also surely have a positive values accordingly, and thus no problem is caused. If a value obtained by normalizing an output shown in FIG. **9B** exceeds an output value, the following cases will result.

First, an output from the subtracters **807**, **808** and **809** may produce a negative error and thus an output from the adders **801**, **802** and **803** may have a negative value. In this case, the output becomes 10 bits as an output by being added with a sign bit. Accordingly, the bit diminution units **804**, **805** and **806** are composed of a table for an input of 10 bits. In this case, if an arrangement is such that when a negative value is input, an output from the table becomes 0 by rounding the value, data can be supplied to the color component conversion unit **102** without producing a negative output in the bit diminution units **804**, **805** and **806**, and thus such a disadvantage that values of R, G and B are negative is not caused.

Therefore, in the system shown in FIG. **8A** in which bit diminution units **804**, **805** and **806** are composed of a table, respectively, when an input value to the table exceeds the number of bits of R, G, B to an input unit **101**, an output from the table is rounded within the number of bits input to the input unit **101** (255 types of representations in the case of 8 bits) and a negative input value is rounded to 0. As a result, the number of bits supplied to a color component conversion unit **102** is effectively used in a full range and an error diffusion processing is performed without causing a disadvantage that a negative value is produced, and thus a gradation corresponding to the gradation at the input unit **101** can be provided.

To supplement the above description, when an input value to the table exceeds the number of bits of R, G, B to the input unit **101**, one bit of the output bits (4 bits in this embodiment) from the table is needed for an error diffusion and thus these bits cannot be effectively used. Further, a negative value less than 0 is output with respect to a positive or negative input value to the table, one more bit is used as a sign bit. In this case, a bit using efficiency is further lowered as well as the color component conversion unit **102** must process a not existing negative value of R, G, B, which is not theoretically correct and sometimes calculation cannot be performed.

As described above, according to this embodiment, the number of bits of image data can be diminished prior to the ADCT image compression process, and thus a circuit scale of the ADCT circuit can be diminished and input data having bits larger than those which can be processed by the ADCT circuit can be received.

Moreover, even if the number of bits of input image data is diminished, the errors caused by the diminution are divided to circumferential pixels, and thus luminance data or density or gradation data can be preserved, whereby the number of gradations achieved by the number of bits of the input image data can be preserved as it is.

Next, a further embodiment of the present invention will be described. This embodiment is characterized in that the diffusion of errors is also applied to the DC component obtained as a result of quantization in the ADCT. As described above, a difference between a quantized value of a usual DC component and a quantized value of a DC component in an 8×8 block positioned in front of the usual DC component by a pixel in the ADCT and coded. However, an error caused when the DC component is quantized is cut off as it is. Therefore, the density or gradation of an image is not preserved unless the frequency of occurrence or the size of positive errors and negative errors is normally distributed or the total of positive errors coincides with the total of negative errors over the entire image screen.

According to the embodiment of the present invention described above, errors produced when the DC component of an 8×8 block is quantized are diffused to nearby blocks or a circumferential 8×8 pixel block and the blocks diffused with the errors are quantized after the errors are added to the DC component. The DC component shows an average value of image data in the 8×8 block, and thus when this average value is preserved by the diffusion of the errors, a density or gradation of the image is preserved as a whole and a decrease in the reproduced number of gradations can be prevented.

FIG. **10** is a diagram showing the arrangement of this embodiment.

All the errors of the DC component of this embodiment can be contained in a quantization unit **104**. Since an error diffusion process for an AC component is described above, only an error diffusion process for a DC component will be described here. First, only a DC component as the head portion of data output from a zig-zag memory **504** as a result of an 8×8 DCT processing is latched by a DC component extraction unit **1001** and added with a quantization error of a DC component of an 8×8 pixel of a previous block by an adder **1002**. An output from the adder **1002** is quantized by being divided by a DC coefficient of a quantization table **105** by a divider **1003** and rounded. A value obtained as a result of the division is multiplied by a DC quantization coefficient by a multiplier **1004** and a difference between a thus obtained value and an output from the divider **1003** is determined by a subtracter **1006** and serves as a quantization error. The quantization error is delayed by a block by being latched once by a latch unit **1007** and then added by the adder **1002** with an output from the DC component extraction unit **1001** which is a DC component of the next block.

On the other hand, the quantization data as the output from the divider **1003** is delayed by a block by being latched by a latch unit **1005** and supplied to a subtracter **1008**, which subtracts the one-block-delayed data as an output from the latch **1005** from the quantization data as the output from the divider **1003** and outputs a thus obtained difference.

A switching unit **1009** switchingly and sequentially outputs the difference value of the DC component and the quantized value of the AC component.

Note that the description of the same elements in FIG. **10** as those in FIG. **5** is omitted.

What is claimed is:

1. An image processing method for processing image data arranged in image blocks, comprising the step of:

converting image data to a space frequency component for each image block; and

diffusing a quantization error produced by quantizing a space frequency component of an image block to another space frequency component of the same image block.

2. An image processing device for processing image data arranged in image blocks, comprising:

conversion means for converting image data to a space frequency component for each image block;

quantization means for quantizing said space frequency component converted by said conversion means; and

HUAWEI EX. 1016 - 479/714

control means for controlling said quantization means so that a quantization error produced by quantizing the space frequency component of an image block is diffused to another space frequency component of the same image block.

3. An image processing method according to claim 1, wherein said quantization error is multi-dimensionally diffused to said other space frequency components.

4. An image processing method according to claim 1, further comprising the step of quantizing said space frequency component.

5. An image processing method according to claim 1, further comprising the step of assigning a Huffman code to said quantized space frequency component.

6. An image processing method according to claim 1, further comprising the step of transmitting said Huffman code.

7. An image processing method, comprising the steps of:

converting image data having a first number of bits to image data having a lesser number of bits; and

diffusing an error produced in said conversion process to nearby image data and then converting the error-diffused image data into frequency component image data.

8. An image processing method according to claim 7, wherein the first converting step is an ADCT image compression/extension processing.

9. An image processing method for processing image data arranged in blocks, wherein the method is used in an ADCT image compression/extension processing, comprising the steps of converting image data to a space frequency component for each image block, quantizing a converted space frequency component and diffusing a quantized error produced by quantizing a space frequency component of a block to another frequency component of the image block.

* * * * *

E9595 XR 4,776,030

United States Patent [19]

Tzou

[11] **Patent Number: 4,776,030**

[45] **Date of Patent: Oct. 4, 1988**

[54] **BLOCK QUANTIZER FOR TRANSFORM CODING**

[75] Inventor: **Kou-Hu Tzou**, Bedford, Mass.

[73] Assignee: **GTE Laboratories Incorporated**, Waltham, Mass.

[21] Appl. No.: **845,644**

[22] Filed: **Mar. 28, 1986**

[51] **Int. Cl.**[4] **G06K 9/46**

[52] **U.S. Cl.** **382/56**; 358/260

[58] **Field of Search** 358/260, 133; 382/56, 382/39, 43; 364/725; 375/26

[56] **References Cited**

U.S. PATENT DOCUMENTS

4,196,448	4/1980	Whitehouse	364/725
4,200,886	4/1980	Musmann	358/260
4,225,885	9/1980	Lux	382/56
4,385,393	5/1983	Chaure	375/26
4,386,366	5/1983	Mori	358/260
4,398,217	8/1983	Peters	382/56
4,513,426	4/1985	Jayant	375/26
4,581,638	4/1986	Chiariglione	358/260
4,677,479	6/1987	Hatori	358/135

OTHER PUBLICATIONS

Anil K. Jain, "Image Data Compression: A Review," *Proceedings of the IEEE*, vol. 69, No. 3, Mar. 1981.

K. N. Ngan, "Adaptive Transform Coding of Video Signals," *IEE Proc.*, vol. 129 Pt. F, No. 1, Feb. 1982.

Arun N. Netravali and John O. Limb, "Picture Coding: A Review," *Proceedings of the IEEE*, vol. 68, No. 3, Mar. 1980.

Paul A. Wintz, "Transform Picture Coding," *Proceedings of the IEEE*, vol. 60, No. 7, Jul. 1972.

Primary Examiner—Leo H. Boudreau
Assistant Examiner—A. Anne Skinner
Attorney, Agent, or Firm—Hamilton, Brook, Smith & Reynolds

[57] **ABSTRACT**

In a two-dimensional transform coding system, the transform coefficients are ordered according to the variance of the coefficients through a frame of coefficient blocks. Quantization bits are individually assigned to maximize the reduction in quantization error with each assignment. The coefficients are grouped according to the number of quantization bits assigned thereto. To assign each bit, the reduction in quantization error of the frame of the block is computed for the coefficient having the largest variance of each group as the product of the square of the variance and the normalized change in quantization error. The normalized change in quantization error may be stored in a lookup table as a function of the type of distribution of the coefficients.

20 Claims, 5 Drawing Sheets

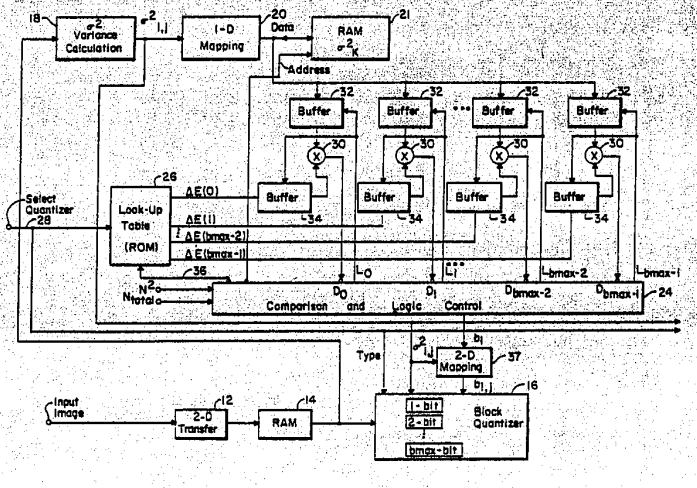

HUAWEI EX. 1016 - 481/714

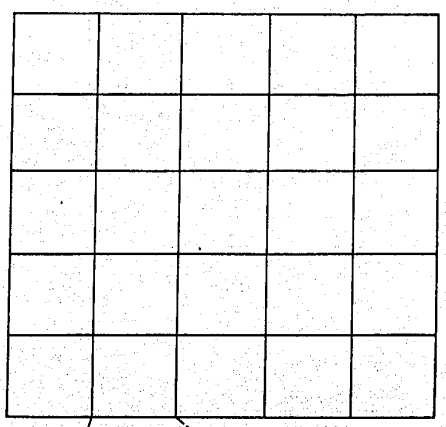

i,j=0,0 b=4	0,1 3	0,2 2	0,3 1
1,0 2	1,1 1	1,2 1	1,3 0
2,0 1	2,1 1	2,2 0	2,3 0
3,0 0	3,1 0	3,2 0	3,3 0

Fig. 1

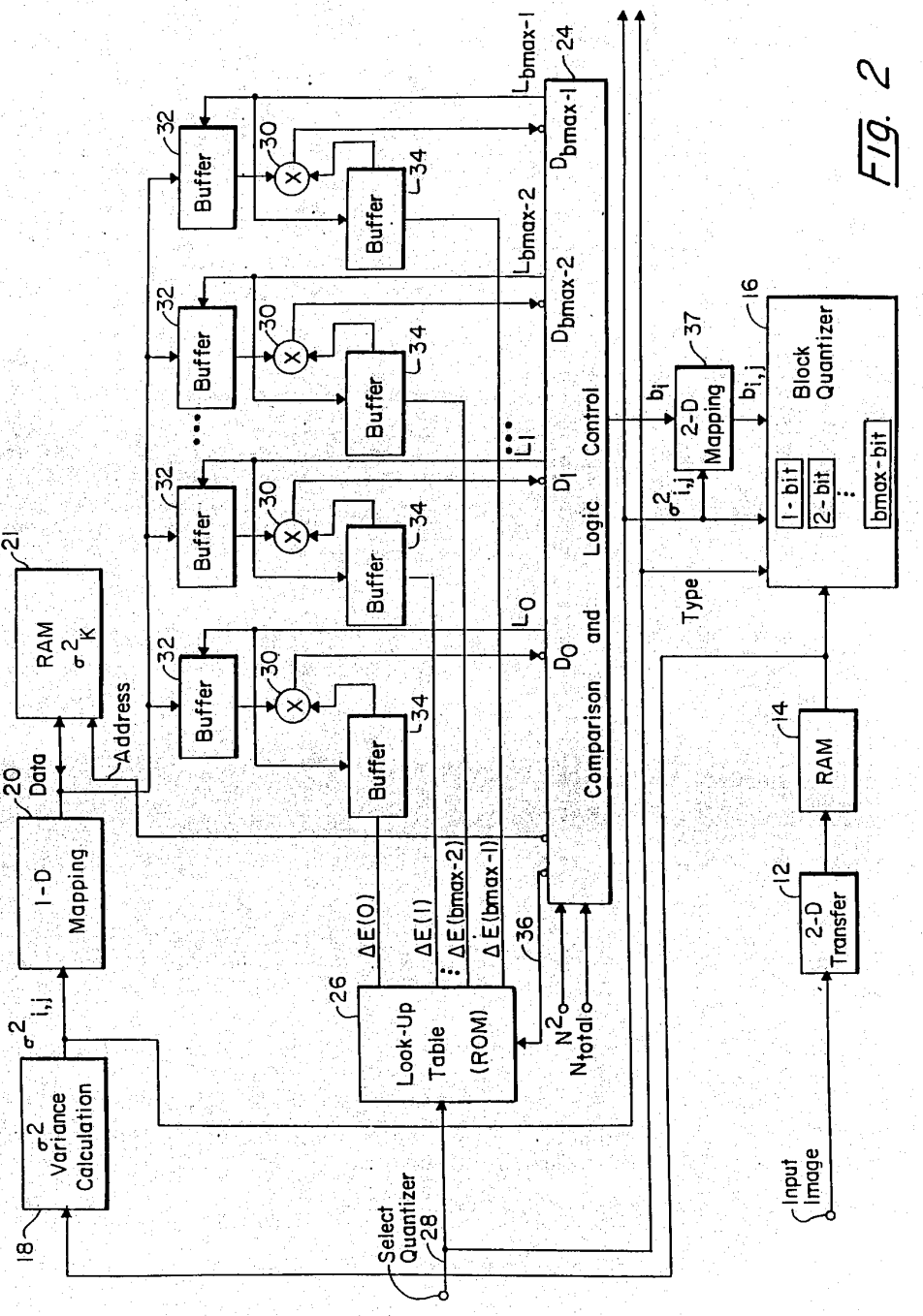

FIG. 2

HUAWEI EX. 1016 - 483/714

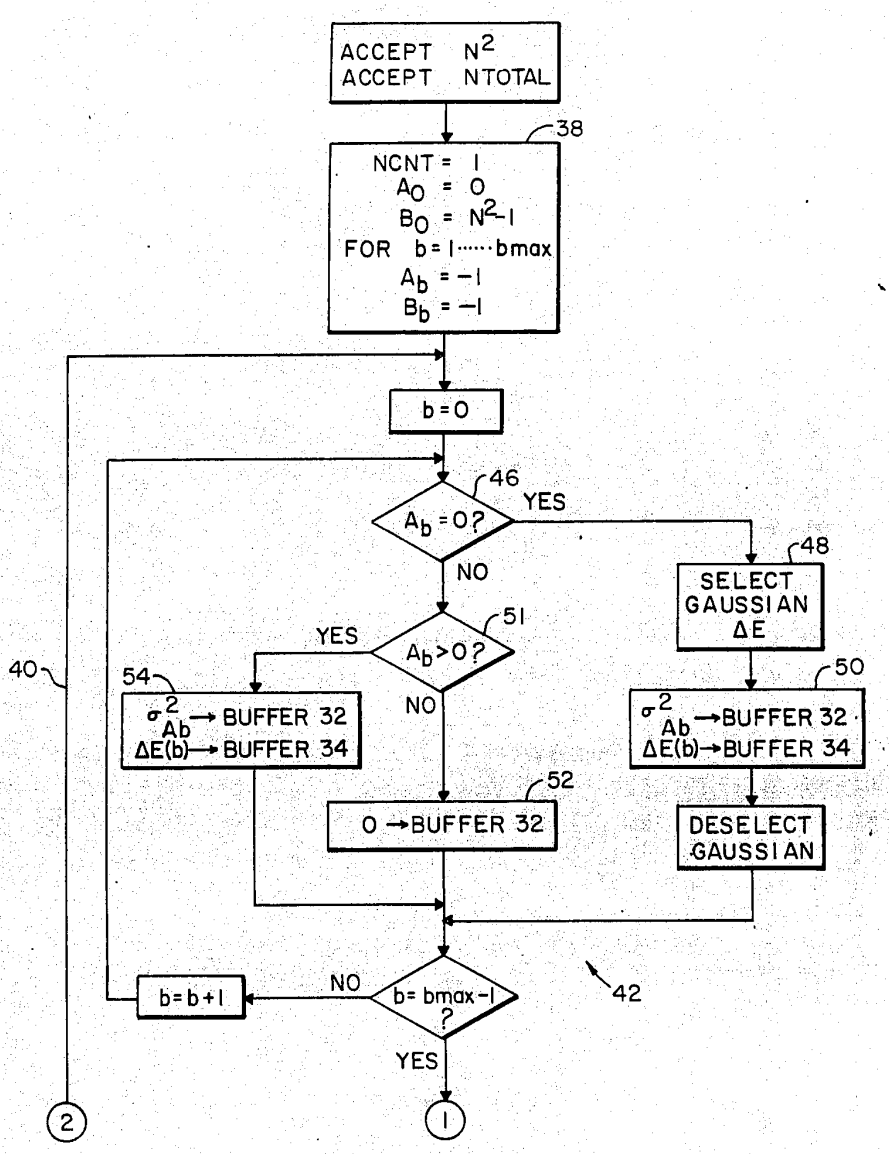
ACCEPT N2
ACCEPT NTOTAL
38
NCNT = 1
A0 = 0
B0 = N2-1
FOR b = 1 ..... bmax
Ab = -1
Bb = -1
b = 0
46
Ab = 0?
YES
NO
48
SELECT GAUSSIAN ΔE
51
Ab > 0?
YES
NO
40
54
σ2 Ab → BUFFER 32
ΔE(b) → BUFFER 34
50
σ2 Ab → BUFFER 32
ΔE(b) → BUFFER 34
52
0 → BUFFER 32
DESELECT GAUSSIAN
42
b = b+1
NO
b = bmax-1 ?
YES
2
1

Fig. 3

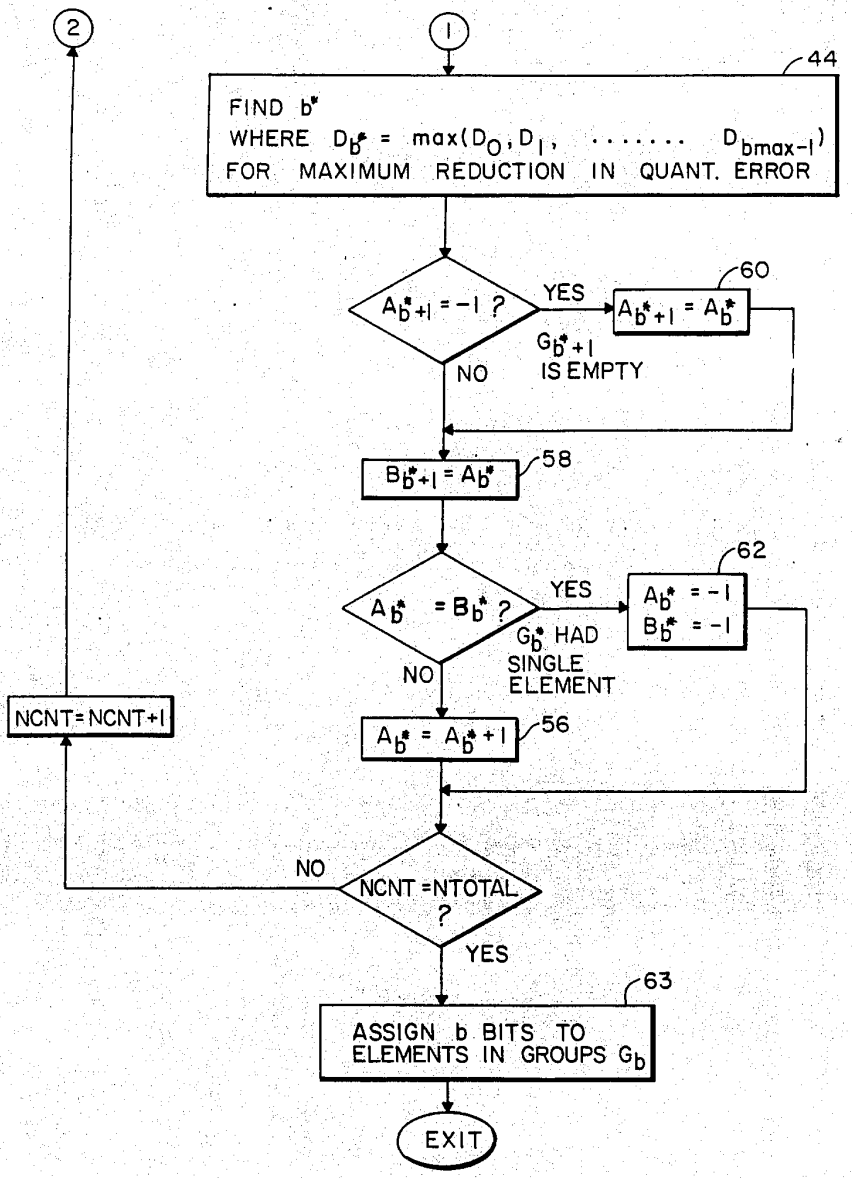
2
1
44
FIND b*
WHERE $D_{b^*} = \max(D_0, D_1, \ldots\ldots D_{bmax-1})$
FOR MAXIMUM REDUCTION IN QUANT. ERROR
$A_{b^*+1} = -1$?
YES
60
$A_{b^*+1} = A_{b^*}$
G_{b^*+1} IS EMPTY
NO
$B_{b^*+1} = A_{b^*}$
58
$A_{b^*} = B_{b^*}$?
YES
62
$A_{b^*} = -1$
$B_{b^*} = -1$
G_{b^*} HAD SINGLE ELEMENT
NO
$A_{b^*} = A_{b^*} + 1$
56
NCNT = NCNT+1
NO
NCNT = NTOTAL ?
YES
63
ASSIGN b BITS TO ELEMENTS IN GROUPS G_b
EXIT

Fig. 3

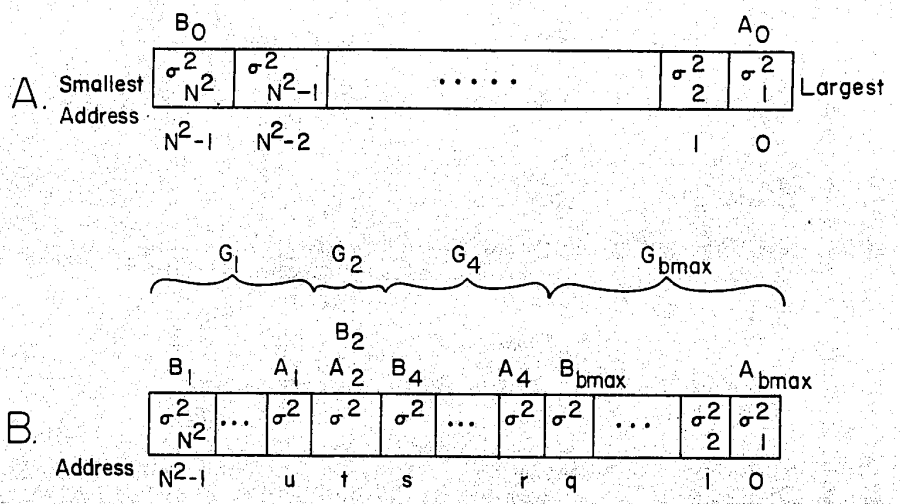

Fig. 4

HUAWEI EX. 1016 - 486/714

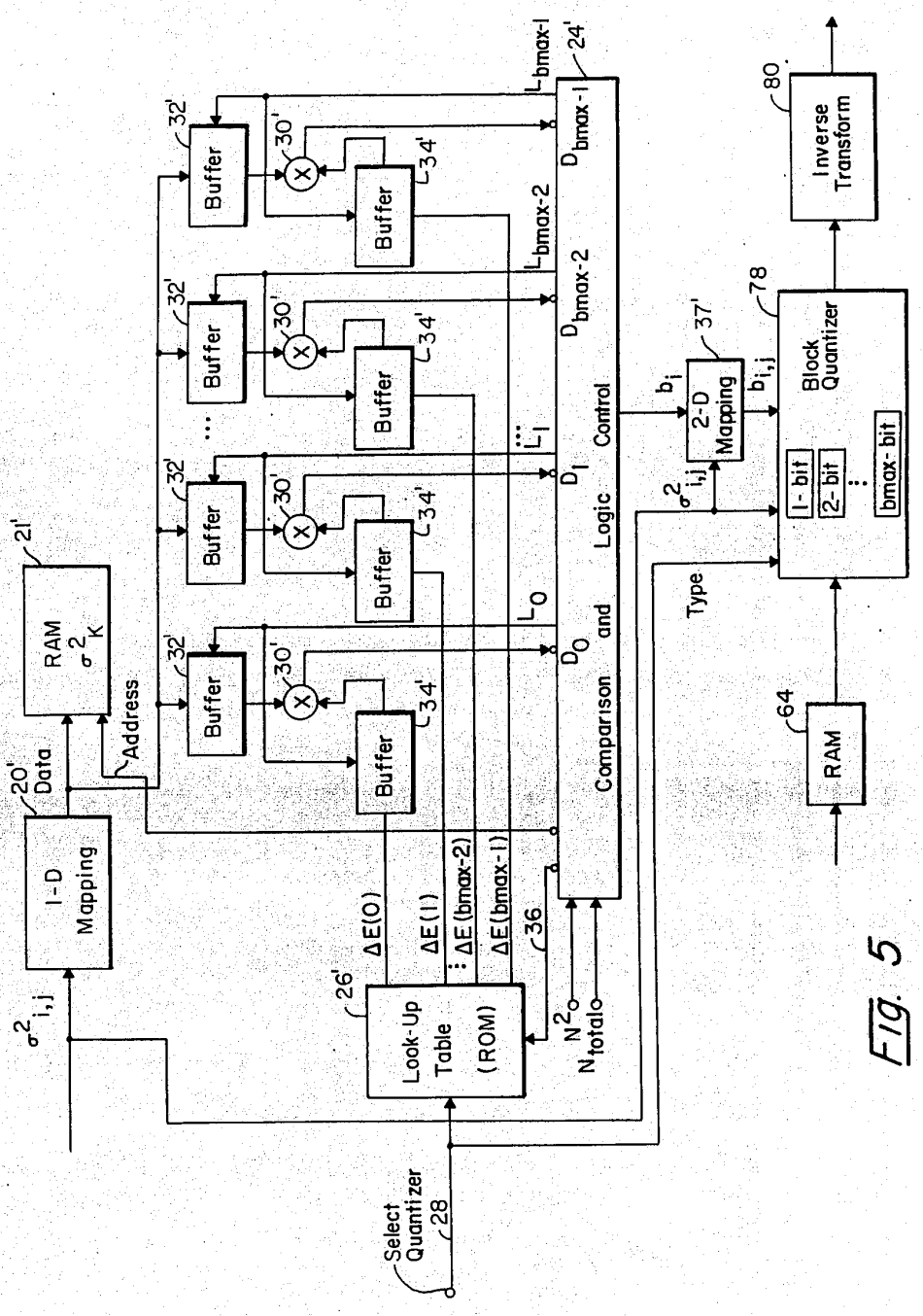

FIG. 5

HUAWEI EX. 1016 - 487/714

BLOCK QUANTIZER FOR TRANSFORM CODING

BACKGROUND

Due to the advantages of digital transmission in telecommunications and the flexibility of signal processing by digital circuitry, digital images are preferred in various applications. However, the transmission of images in digital format needs much more bandwidth than transmission of analog waveforms. In order to reduce the transmission rate for digital images, various image compression techniques have been developed. Among them, transform coding has been proven to be an efficient means of image compression.

In a typical transform image coding system, an image is segmented into blocks of equal size as illustrated in FIG. 1. In the illustration of FIG. 1, an image frame is divided into 5×5 blocks, each of which includes $4\times4=N^2$ picture elements (pixels). Within each block, the coefficients can be identified by the rectangular coordinates i,j. A small number of blocks and picture elements are used for purposes of illustration, but a more typical system would include 8×8 or 16×16 pixel blocks to complete a frame of 512×512 pixels.

A two-dimensional transform is applied to each block, and a block coder is then used to encode the transform coefficients. The decoding system is just a reverse procedure corresponding to the encoding. Various transforms have been studied for image coding applications. Among them, the Discrete Cosine Transform (DCT) is found to be the best from the combined standpoint of performance and computational efficiency.

With a discrete cosine transform an N×N array of coefficients results from the transform of an N×N block of pixels. With a discrete Fourier transform a lesser number of complex coefficients would be obtained. Because natural images tend to have smooth transitions, the coefficients tend to be greater in magnitude toward the lower frequencies, that is toward i, j=0, 0. For that reason, more efficient use of bits is made by allocating a greater number of bits to the lower frequency coefficients during quantization. A typical allocation of bits $b_{i,j}$ is shown in FIG. 1.

The most crucial task in designing a transform image coding system is in designing a block quantizer to encode the two-dimensional transform coefficients. For nonadaptive types of coding, a zonal coding strategy that uses a fixed block quantizer might allocate the bits as, for example, shown in FIG. 1. Basically, this type of block quantizer is designed according to the rate derived from the rate-distortion theory. For Gaussian sources with the mean squared error (MSE) distortion measure, the optimal rate or number of bits, $R_{i,j}(D)$, for the (i,j)th transform coefficient is found to be

$$R_{i,j}(D)=\begin{cases}\frac{1}{2}\log\ \sigma_{i,j}^2/D & \sigma_{i,j}^2>D\\ 0 & \sigma_{i,j}^2\leq D\end{cases} \quad (1)$$

where $\sigma_{i,j}$ is the variance of the (i,j)th transform coefficient through the frame and D is the desired average mean squared error. For most non-Gaussian sources, the optimal rate could not be found from the rate-distortion theory. Actually, there have been no known practical methods to achieve the minimum mean squared error, even for Gaussian sources. Instead, the rate $R_{i,j}(D)$ in equation (1) is rounded to its closest integer $[R_{i,j}(D)]$, and an $[R_{i,j}(D)]$-bit optimal quantizer is used to encode the transform coefficient. The optimality of the rate-distortion block quantizer is lost by this rounding. Further, a study recently showed that the distribution of AC coefficients of the DCT is not Gaussian. Instead, it is closer to a Laplacian distribution.

In another approach the allocation of bits is determined for each frame by computing, for each bit to be assigned to a block of coefficients, the change in quantization error which would result by assignment of that bit to each of the coefficients. Each bit is then assigned to the coefficient which provides for the greatest reduction in quantization error. A. K. Jain, "Image Data Compression: A Review" *Proceedings of the IEEE*, Volume 69, Number 3, March, 1981, Pages 349–388, at 365. The Jain approach requires extensive computations.

SUMMARY OF THE INVENTION

In an adaptive system, discrete coefficients in a block of coefficients are quantized with different numbers of quantization bits per coefficient. Corresponding coefficients in each block are quantized with a like number of bits. To allocate the bits, the coefficients are ordered according to the variance of the coefficients through a frame of a plurality of blocks. (Because variance is the square of standard deviation, ordering by standard deviation would also order by variance.) Each quantization bit is then assigned to a coefficient and the coefficients are grouped according to the number of thus assigned bits. The bits are assigned by determining, for each of the plurality of quantization bits per block, the reduction in the quantization error of the frame of blocks with assignment of the quantization bit to the coefficient of each bit group having the largest variance. The determined quantization errors are then compared and the bit is assigned to the coefficient for which the largest reduction in quantization error is obtained. The coefficients of each block throughout the frame are then quantized with the assigned number of bits.

The system has been developed for quantizing the coefficients resulting from a two dimensional transform of blocks of image data. Preferably, the change in quantization error is computed for each coefficient from the variance of that coefficient through the frame and a normalized change in quantization error for the particular bit being added. The normalized change in quantization error can typically be defined for each bit group based on the distribution of the incoming signal and the nature of the quantizer to be used. The normalized reductions in quantization error can be stored in tables for known distributions such as the Gaussian and Laplacian.

BRIEF DESCRIPTION OF THE DRAWINGS

The foregoing and other objects, features, and advantages of the invention will be apparent from the following more particular description of a preferred embodiment of the invention, as illustrated in the accompanying drawings in which like reference characters refer to the same parts throughout the different views. The drawings are not necessarily to scale, emphasis instead being placed upon illustrating the principles of the invention.

FIG. 1 is an illustration of an image display organized in 5×5 blocks, each of 4×4 pixels;

HUAWEI EX. 1016 - 488/714

FIG. 2 is a block diagram of an encoder embodying the present invetion;

FIG. 3 is a flow chart of the comparison and logic control of FIG. 2;

FIG. 4 illustrates the use of pointers to group variances in the system of FIGS. 2 and 3;

FIG. 5 is a block diagram of a decoder embodying the present invention.

DESCRIPTION OF A PREFERRED EMBODIMENT

The present invention is based on the concept that each bit to be allocated to a block of coefficients is best allocated to that coefficient which provides for the greatest reduction in quantization error with the addition of that bit. For example, once three bits have been allocated in a block, the fourth bit should be allocated to that coefficient for which there will be the greatest reduction in quantization error. If the two dimensional array of N×N coefficients are mapped into a one dimensional array of N^2 coefficients, the mean square error E which must be minimized is given as:

$$E = \sum_{k=1}^{N^2} \sigma_k^2 E(b_k) \quad (2)$$

within a fixed total bit number constraint

$$B = \sum_{k=1}^{N^2} b_k$$

where σ^2 is the variance of each coefficient through the frame, b_k is the number of bits assigned to each coefficient k within each block and $E(b_k)$ is the normalized quantization error for each particular b_k-bit quantizer. $E(b_k)$ is directly and explicitly related to the distribution of the coefficients being encoded and the type of quantizer used, and the quantizer can be either uniform or nonuniform. In the case of DCT image coding, the AC terms of the transform coefficients have a distribution close to the Laplacian and the DC term has a distribution close to the Gaussian.

The reduction ΔE_k in mean square error by allocating another bit for coefficient k is

$$\Delta E_k = \sigma_k^2[E(b_k) - E(b_k+1)] = \sigma_k^2 \Delta E(b_k) \quad (3)$$

The design rule is to assign an available bit to the coefficient k that provides the largest ΔE_k. Nevertheless, the computation of ΔE_k and the comparison for choosing the largest ΔE_k does not have to be carried out over all coefficients k. With a given number of bits previously allocated to several coefficients, $[E(b_k) - E(b_k+1)]$ is equal for all coefficients. Therefore, the greatest reduction in mean square error ΔE_k will result by allocating the bit to the coefficient having the greatest variance.

Identification of the coefficient having the greatest variance is facilitated by initially listing the coefficient variance by order of magnitude. Initially, a single bit is allocated to the coefficient having the greatest variance. Thereafter, the coefficients are grouped according to the number of bits allocated thereto and within each group the variances are ordered according to the magnitude thereof. To allocate each additional bit, a computation is made according to equation 3 of the change in mean square error which would occur if the bit were allocated to the coefficient having the largest variance in each group. The computed mean square error reduction from each group then determines the coefficient to which the bit is to be allocated, and that coefficient is moved to the group of one additional bit.

Therefore, if an extra bt were allocated to Group G_b, where b is the number of bits previously allocated, the bit should be assigned to the group's first element, that is, that having the largest variance. The comparisons that have to be carried out become those of comparing the ΔEs corresponding to the first elements of each of these groups. The design procedure of the bit map for an N×N transform with b bits assigned to each coefficient of each group can be summarized as follows:

Step 1. Initialize variables. Set $G_o = \{\sigma_1^2, \sigma_2^2 \ldots, \sigma_k^2 \ldots \sigma_{NXN}^2\}$
G_b = Empty for $b \geqq 1$. Set counter Ncnt = 0.

Step 2. If Ncnt = total bits allocated to the N×N block, then go to END.

Step 3. Calculate ΔE corresponding to the first element of each group.

Step 4. Assign a bit to the first element of Group G_b with the largest ΔE, and move that element to Group G_{b+1}.

Step 5. Increment counter; i.e. Ncnt = Ncnt + 1. Go to Step 2.

A system for implementing the above approach is illustrated in FIG. 2. A sequence of pixels for an image frame are applied to a two dimensional transform 12 such as a DCT. In the transform the image is divided into blocks as illustrated in FIG. 1, and a two dimensional transform is computed for each block to generate a set of coefficients U(i,j) for each block. The thus generated coefficients are stored in a RAM 14. The coefficients are used to determine an allocation of bits within each block which is applied across the entire frame. Once that allocation of bits is obtained, the coefficients are applied through a block quantizer 16 and quantized to the assigned number of bits. The block quantizer 16 may use scalar quantizers of any available type. For example, the optimal uniform and nonuniform quantizers proposed by J. Max may be used. J. Max, "Quantizing for Minimum Distortion", *IRE Trans. Information Theory*, 6, 7–12, (1960).

To determine the allocation of bits for the frame, the variance $\sigma_{i,j}^2$ is computed at 18 for all coefficients i, j of the frame. In the system illustrated in FIG. 1, for example, 16 variances would be computed. Those variances are then ordered according to magnitude in a one dimensional mapping unit 20 and stored in a RAM 21. In a comparison and logic control 24, pointers are generated and stored for grouping the variances according to the number of bits assigned thereto. Initially all variances are assigned to a first group G_0.

In order to compute the reduction in mean square error with the allocation of each bit, the nature of the distribution of the incoming signal must be determined. For example, the DCT of a natural image has a distribution closer to the Gaussian distribution at DC and a distribution closer to the Laplacian distribution at AC. When the logic control determines that the σ_K^2 corresponding to $\sigma_{i,j}^2 = \sigma_{0,0}^2$ is being considered, a ΔE based on a Gaussian distribution would be obtained. Otherwise, a ΔE(b) based on a Laplacian distribution would be required.

E is also dependent on the group G_b being considered.

A precalculated table of ΔE(b) based on the type of qualtizers in the block quantizer 16 being used can be

HUAWEI EX. 1016 - 489/714

provided in a ROM 26 for each type of distribution. Different tables may also be stored for different types of quantizers in the block quantizer 16 which may be used in the system. Each table would include a different value of $\Delta E(b)$ for each group G_b. A particular table of $\Delta E(b)$ is selected by a signal 28 based on the known type of quantizer and the known distribution of the incoming signal. Alternatively, in a more complex system, the $\Delta E(b)$ might be calculated for each sequence of frames. Typically, the distribution is constant throughout an image sequence.

The system further includes a set of multipliers 30, each of which is associated with a bit group G_b. The multipliers are used to calculate the product of the largest variance of each bit group with the normalized change in quantization error ΔE of that bit group. The variances are addressed from the RAM 21 and latched into buffers 32 by the comparison and logic control 24. The changes in quantization error from the table 26 selected by the select signal 28 are latched into buffers 34. Alternative tables can be selected by the comparison and logic control 24 by means of signal 36 when, for example, the variance being multiplied is associated with the DC term which has a Gaussian distribution.

The logic control 24 selects the appropriate $\Delta E(b)$ for multiplication with each largest σ_k^2 obtained from each group G_b. The products obtained from multipliers 30 are compared to determine the largest reduction in mean square error. The σ_k^2 which provides the largest reduction in error is shifted to the next larger group and held as the smallest σ_k^2 of that group. All other variances are retained in their respective groups. The system has a maximum number of bits bmax into which a coefficient may be quantized and the variances of corresponding groups G_{bmax} may not be used in the comparison. The multiplications and comparisons continue until all bits designated for a block have been allocated. Thereafter, the bits b_k are mapped to the two dimensions i,j of the coefficients in 2-D map 37 and each coefficient of each block is quantized according to the assigned bit allocation.

Operation of the comparison and logic controller 24 is illustrated by the flow chart of FIG. 3 and the illustrations of FIG. 4. Throughout the sequence, the variances are stored in addresses 0 to N^2-1 with the largest variance stored at address 0 and the smallest at address N^2-1. The variances are grouped by two pointers A_b and B_b for each group. A_b indicates the largest variance of the group and B_b indicates the smallest variance of the group. The addresses are stored in registers in the comparison logic and control 24. Initially, all variances are assigned zero bits and are thus included in group G_0. This is indicated by A_0 equal to 0 B_0 equal to N^2-1 as illustrated in FIG. 4A, and those variables are initialized in Block 38 of FIG. 3. The other groups are initially empty and this is indicated by setting A_b and B_b each equal to -1.

Each bit to a total number of bits Ntotal is then assigned to a respective group G_b in a loop which includes the return line 40. Within that loop, the Buffers 32 are first loaded in a DO loop 42. Then, the changes in quantization error are calculated through the multipliers 30, and the maximum change in error is determined in Block 44 (FIG. 3, Sheet 2). Then, the pointers are modified to effectively transfer the variance which provides the largest change in error to the next bit group G_b.

A possible grouping of the variances by the pointers A_b and B_b is illustrated in FIG. 4B. In this illustration, a group of variances including $_1^2$ is included in group G_{bmax}. This group is defined by addresses $B_{bmax}=q$ and $A_{bmax}=1$. Group G_4 is defined by address pointers $B_4=s$ and $A_4=r$. Note that group G_3 is empty so B_3 and A_3 would both equal -1. Group G_2 incldes a single element, so B_2 and A_2 both equal t. Group 1 is defined by $B_1=N^2-1$ and $A_1=u$. Group G_0 is now empty, so B_0 and A_0 both equal -1.

As the system proceeds through the DO loop 42, it first checks at 46 whether the address of the largest variance of the group being considered is equal to 0. If it is, the $\Delta E(b)$ corresponding to a Gaussian distribution is selected by signal 36 (FIG. 2) at block 48 (FIG. 3, Sheet 1). That $\Delta E(b)$ is then applied to the buffer 34 associated with $_1^2$. Then, at 50 the variance $_1^2$ at the address A_b is latched into the associated buffer 32. For any other variance, the $\Delta E(b)$ from the usual look-up table selected by signal 28 is used. For each A_b not equal to zero, it is determined whether the address is greater than 0 at 51. If it is less than 0 an empty group is indicated, and a zero is latched into the buffer 32 associated with the group of b bits at 52. If the address is positive, the group includes at least one element, and the largest element is that in the address A_b. The variance at A_b is loaded into the associated buffer 32 at 54.

The DO loop 42 is continued until $b=bmax-1$. The variances included in group bmax are no longer considered in the comparison because no further bits can be assigned to the coefficients in that group. With the variances and the E(b)'s thus loaded in the buffers 32 and 34, the changes in quantization error resulting from assignment of the next bit to the several bit groups are available at D_0 to D_{bmax-1}. The largest of those inputs is selected at 44 to identify the bit group b^* having the variance to which that bit should be assigned.

Selected variances are shifted to next larger bit groups by shifting the addresses B_b and A_b from right to left. The simplest case is where the selected variance is taken from a group which had more than the one variance therein and is moved to a group which already has a variance therein. In that case, as illustrated in a move of a variance from group G_1 to group G_2, the pointer A_1 need only be shifted one element to the left by adding one to its address, and the pointer B_2 need only be shifted one to the left by making its address equal to the previous address of A_1. These functions are performed in Blocks 56 and 58, respectively.

When the next larger group into which the variance is shifted is empty, as is group G_3 in FIG. 4B, the pointer A_{b^*+1} is -1, so it can not simply be left as it was; rather, it is given the previous address of A_{b^*} as indicated in Block 60. By thus defining the new A_{b^*+1} and B_{b^*+1} in Blocks 60 and 58, a new group having the single element taken from the address A_{b^*} is created. Thereafter, A_{b^*} may be shifted in block 56 as before.

Another special case is where the selected variance comes from a group having only that variance as a single element. An example is where the variance is taken from group G_2 of FIG. 4B. In that case, the group G_{b^*} is eliminated by setting both A_{b^*} and $B_{b^*}=-1$ in block 62.

Once NCNT=NTOTAL, the assignment of bits to each coefficient is determined from the group pointers at 63. That assignment is converted to a 2D map at 37 (FIG. 2) to select the appropriate b-bit quantizer 16 for each coefficient. Before transmission of the quantized coefficients, the variances and the signal 28 indicating the type of quantizer and the distribution are transmit-

HUAWEI EX. 1016 - 490/714

ted. The signal 28 need only be transmitted once for a sequence of frames and the variances need only be transmitted once for each frame. At the decoder, illustrated in FIG. 5, the quantized coefficients are stored in a random access memory 64 and the bit variances. The computation may be by a system which is identical to that of the coder in that it includes a one dimensional mapping unit 20', an reduction look-up table 26', a RAM 21', buffers 32' and 34', comparison and logic control 24' and a 2-D mapping unit 37'. With the allocation of bits known, the quantized coefficients stored in buffer RAM 64 are applied to an inverse block quantizer 78 to recreate the two dimensional transform coefficients, and those coefficients are then applied to an inverse transform 80 to generate the original image.

While the invention has been particularly shown and described with reference to a preferred embodiment thereof, it is understood by those skilled in the art that various changes in form and details may be made therein without departing from the spirit and scope of the invention as defined by the appended claims.

I claim:

1. A coding system in which discrete coefficients in a frame of blocks of coefficients are quantized with different numbers of quantization bits per coefficient and like numbers of bits for corresponding coefficients in the blocks of the frame, the system comprising, for assigning the quantization bits to the coefficients;

means for ordering the coefficients according to the variance of the coefficients through the frame;

means for grouping the coefficients in bit groups according to the number of bits, if any, already assigned thereto and for regrouping the coefficients as each bit is assigned;

means for determining, for each of a plurality of quantization bits per block, the reduction in quantization error for the frame of blocks with the assignment of a quantization bit to the coefficient of each bit group having the largest variance; and

means for comparing the determined reductions in quantization errors and for assigning the next quantization bit to the coefficient for which the largest reduction in quantization error is associated.

2. A coding system as claimed in claim 1 further comprising means for performing a two dimensional transform to provide the discrete coefficients.

3. A coding system as claimed in claim 1 wherein the means for determining the reduction in quantization error computes the product of the variance of a coefficient and a normalized change in quantization error.

4. A coding system as claimed in claim 3 further comprising a lookup table for storing the normalized changes in quantization error.

5. A coding system as claimed in claim 4 further comprising means to select a table of the normalized changes in quantization error based on the type of distribution of the coefficients.

6. A coding system as claimed in claim 3 further comprising means to identify the type of distribution of the coefficients and for then determining the normalized change in quantization error based on that type of distribution.

7. A coding system as claimed in claim 1 further comprising means for transmitting signals indicative of the variances and the type of distribution with the quantized data.

8. A coding system for transform image coding in which discrete coefficients in a frame of two dimensional blocks of coefficients are quantized with different numbers of quantization bits per coefficient and like numbers of bits for corresponding coefficients in the blocks of the frame, the system comprising, for assigning the quantization bits to the coefficients;

means for performing a two dimensional transform to provide the discrete coefficients;

means for ordering the coefficients according to the variance of the coefficients through the frame;

means for grouping the coefficients in bit groups according to the number of bits, if any, already assigned thereto and for regrouping the coefficients as each bit is assigned;

means for providing normalized changes in quantization error as a function of signal distribution;

means for determining, for each of a plurality of quantization bits per block, the reduction in quantization error for the frame of blocks with the assignment of a quantization bit to the coefficient of each bit group having the largest variance by computing the product of the variance of the coefficient and the normalized change in quantization error;

means for comparing the determined reductions in quantization error and for assigning the next quantization bit to the coefficient for which the largest reduction in quantization error is associated; and

means for quantizing the coefficient of each block of coefficients with the assigned number of bits.

9. A method of quantizing discrete coefficients in blocks of coefficients with different numbers of quantization bits per coefficient and like numbers of bits per corresponding coefficients in the blocks, the method comprising:

for a frame of a plurality of coefficients, ordering the coefficients according to the variance of the coefficients through the frame;

assigning a number of quantization bits to each of a plurality of coefficients in each block and grouping the coefficients in bit groups according to the number of thus assigned bits, the bits being assigned by determining, for each of a plurality of quantization bits per block, the reduction in quantization error for the frame of blocks with assignment of the quantization bit to the coefficient of each bit group having the largest variance, comparing the determined reductions in quantization errors and assigning the next quantization bit to the coefficient for which the largest reduction in quantization error is associated; and

quantizing the coefficients of each block of coefficients with the assigned number of bits.

10. A method as claimed in claim 9 further comprising the step of performing a two-dimensional transform to provide the discrete coefficients.

11. A method as claimed in claim 9 wherein the reduction in quantization error is determined by computing the product of the variance of a coefficient and a normalized change in quantization error.

12. A method as claimed in claim 11 wherein the normalized change in quantization error is retrieved from a lookup table.

13. A method as claimed in claim 12 further comprising the step of providing the type of distribution for selecting the normalized change in quantization error from the lookup table.

14. A method as claimed in claim 11 further comprising the step of identifying the type of distribution of the

HUAWEI EX. 1016 - 491/714

coefficients in order to determine the normalized change in quantization error.

15. A method as claimed in claim 9 further comprising the step of transmitting with the quantized coefficients signals indicative of the variances and type of distribution of the coefficients.

16. A method of assigning a number of quantization bits to each of a plurality of discrete coefficients in blocks of coefficients, the method comprising sequentially assigning the available quantization bits to appropriate coefficients and grouping and regrouping the coefficients in bit groups according to the number of thus assigned bits, the bits being assigned by determining, for each assigned quantization bit, the maximum reduction in quantization error for a frame of blocks of coefficients with assignment of the bit to a predetermined one of the coefficients of each bit group, and assigning the bit to the coefficient, throughout the frame of blocks of coefficients, which provides the greatest reduction in quantization error.

17. A method as claimed in claim 16 further comprising determining the reduction in quantization error from a normalized change in quantization error which is a function of the number of bits already assigned to each coefficient.

18. A method as claimed in claim 17 wherein the normalized change in quantization error is determined as a function of the type of distribution of the coefficients.

19. A method as claimed in 18 wherein the change in quantization error is computed as the product of the variance and the normalized change in quantization error for the coefficient having the largest variance within each group of coefficients having a particular number of bits already assigned thereto.

20. A method as claimed in claim 16 wherein the predetermined one of the coefficients of each bit group is the coefficient having the largest variance.

* * * * *

HUAWEI EX. 1016 - 492/714

US005488570A

United States Patent [19]

Agarwal

[11] Patent Number: 5,488,570

[45] Date of Patent: Jan. 30, 1996

[54] **ENCODING AND DECODING VIDEO SIGNALS USING ADAPTIVE FILTER SWITCHING CRITERIA**

[75] Inventor: **Rohit Agarwal**, Beaverton, Oreg.

[73] Assignee: **Intel Corporation**, Santa Clara, Calif.

[21] Appl. No.: **268,270**

[22] Filed: **Jun. 29, 1994**

Related U.S. Application Data

[63] Continuation of Ser. No. 158,855, Nov. 24, 1993.

[51] **Int. Cl.**[6] **G06F 17/00**

[52] **U.S. Cl.** ..... **364/514 R**; 348/396

[58] **Field of Search** ..... 364/514 R, 514 A; 348/390, 396, 391, 394, 395, 404, 409, 412, 19, 12, 13, 607; 395/162

[56] **References Cited**

U.S. PATENT DOCUMENTS

4,797,740	1/1989	Harasaki et al.	348/607
5,309,237	5/1994	Singh	348/607
5,329,318	7/1994	Keith	348/402
5,351,085	9/1994	Coelito et al.	348/391
5,367,629	11/1994	Chu et al.	395/162
5,381,180	1/1995	Keith	348/396
5,386,232	1/1995	Golin et al.	348/391
5,432,554	7/1995	Nickerson et al.	348/396

Primary Examiner—Ellis B. Ramirez

Attorney, Agent, or Firm—Steve Mendelsohn; William H. Murray

[57] **ABSTRACT**

Reference frames are generated by selectively filtering blocks of decoded video frames. The decision whether to filter a block is based on a comparison of an energy measure value generated for the block and an energy measure threshold value corresponding to the quantization level used to encode the block. The energy measure threshold value for a given quantization level is selected by analyzing the results of encoding and decoding training video frames using that quantization level. The reference frames are used in encoding and decoding video frames using interframe processing.

54 Claims, 32 Drawing Sheets

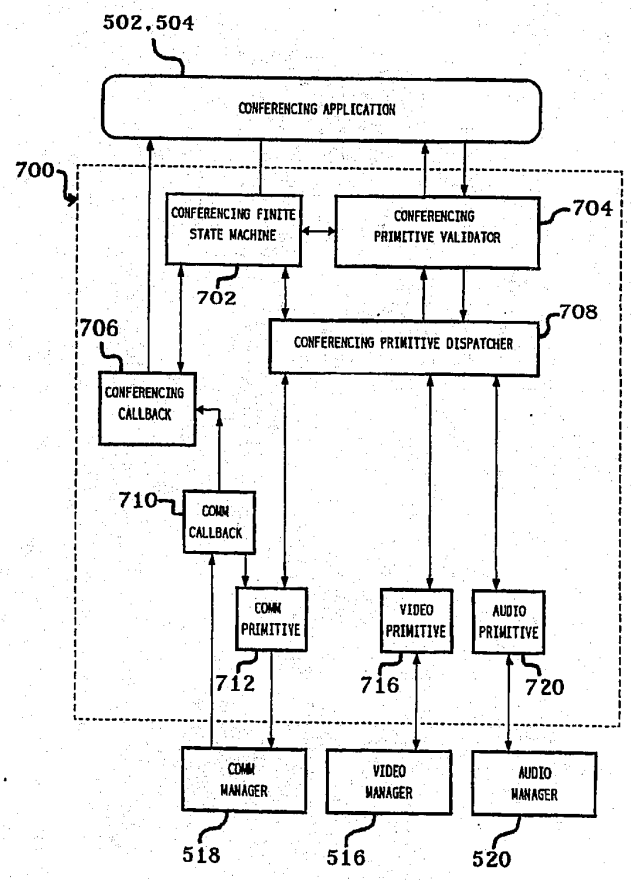

HUAWEI EX. 1016 - 493/714

FIG. 1

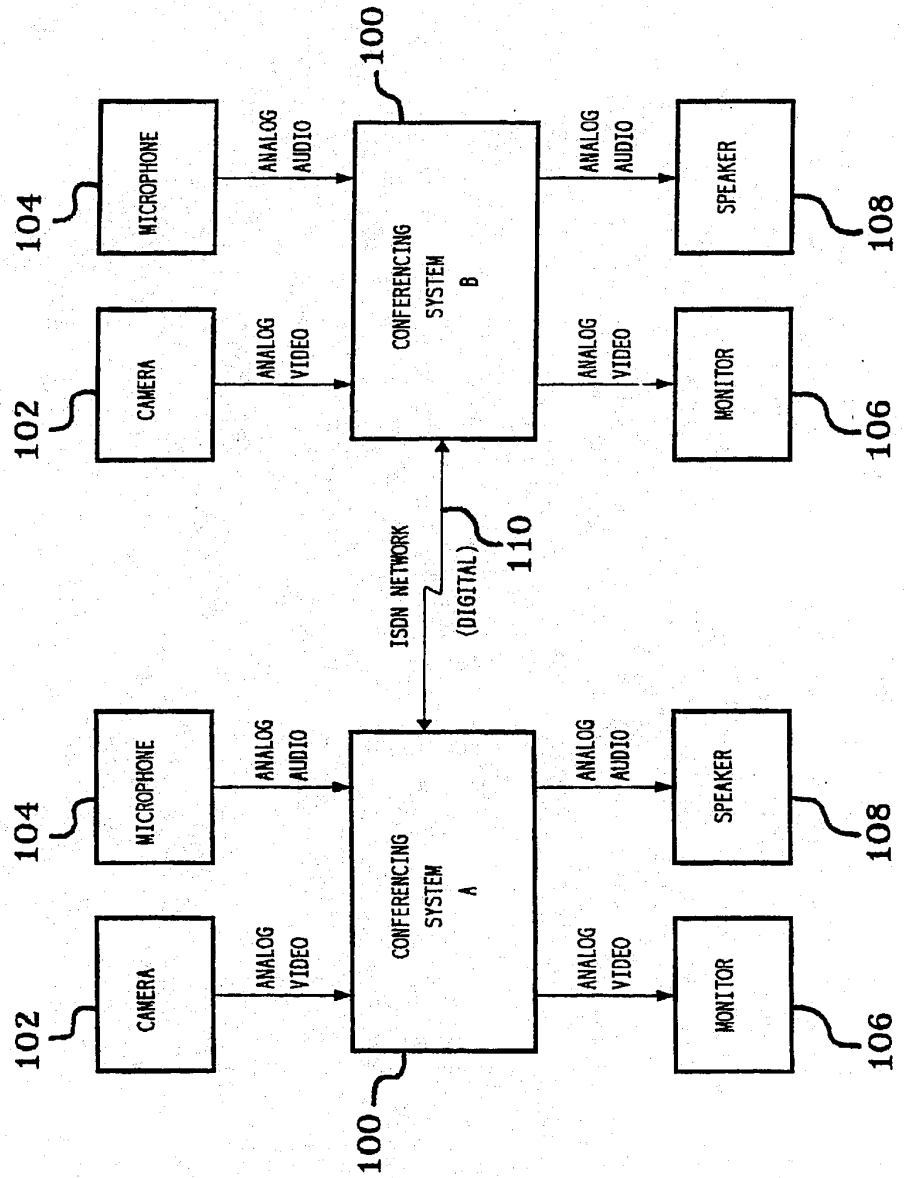
100
MICROPHONE
ANALOG AUDIO
CAMERA
ANALOG VIDEO
CONFERENCING SYSTEM B
SPEAKER
MONITOR
104
102
108
106
ISDN NETWORK
(DIGITAL)
110
CONFERENCING SYSTEM A
100

FIG. 2.

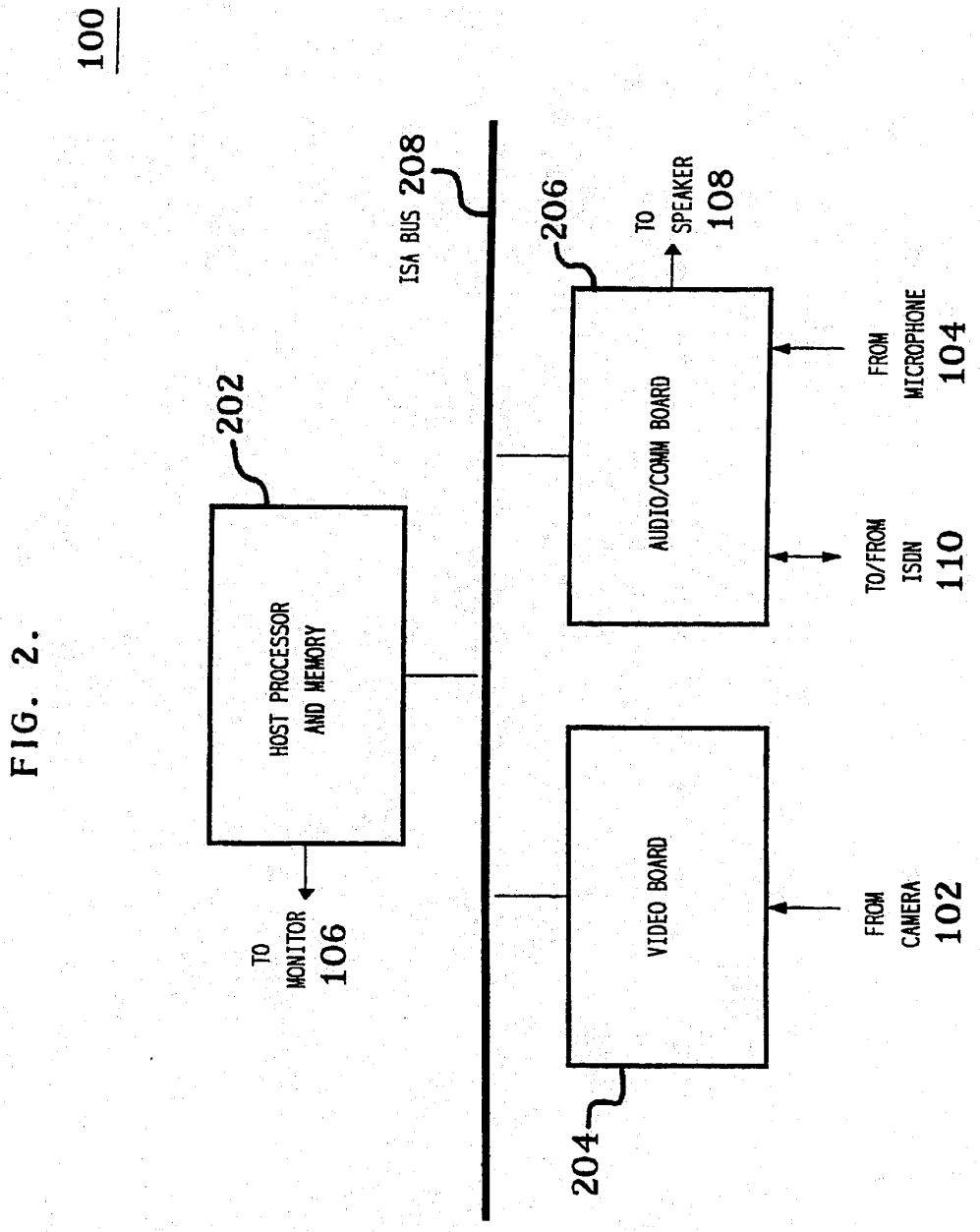

HUAWEI EX. 1016 - 495/714

FIG. 3.

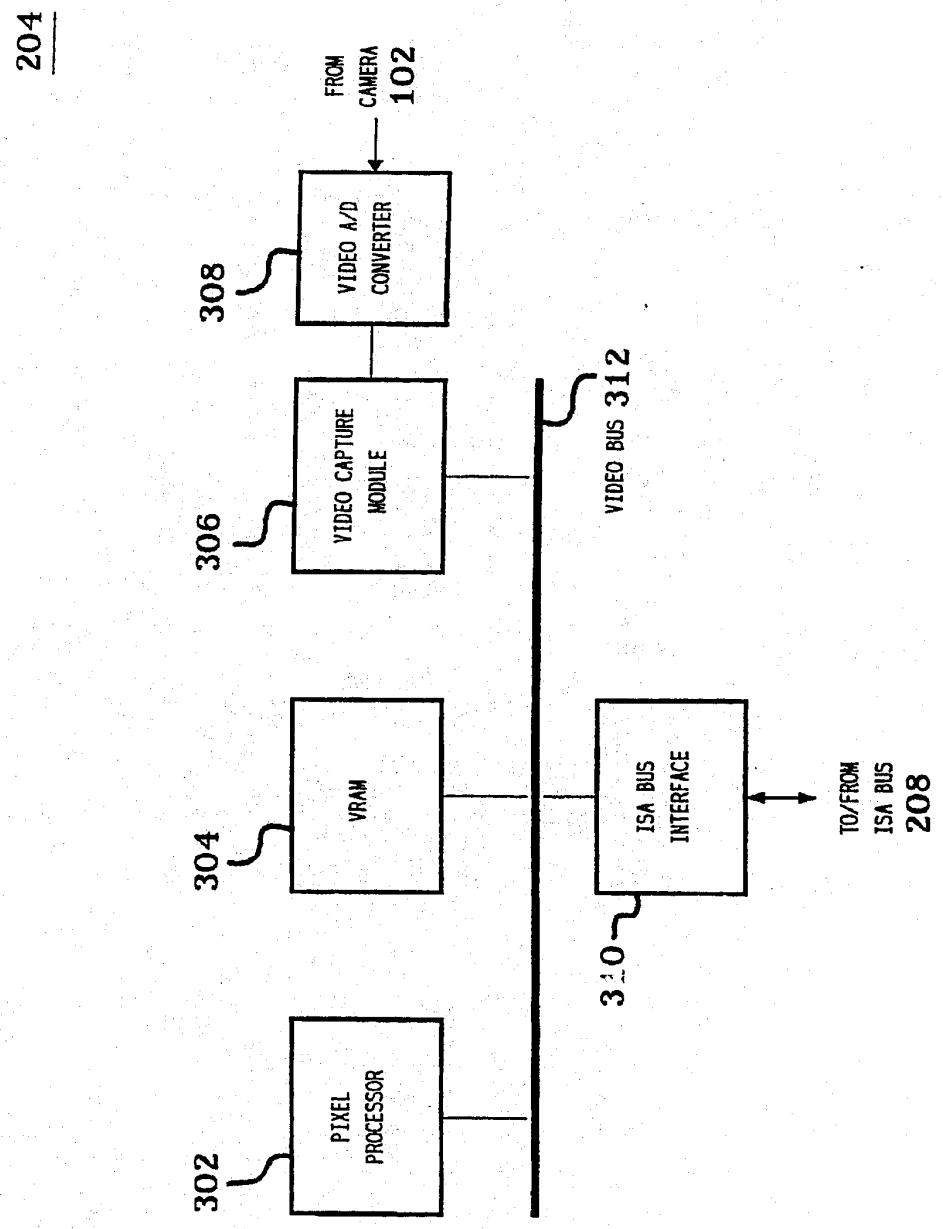

HUAWEI EX. 1016 - 496/714

FIG. 4.

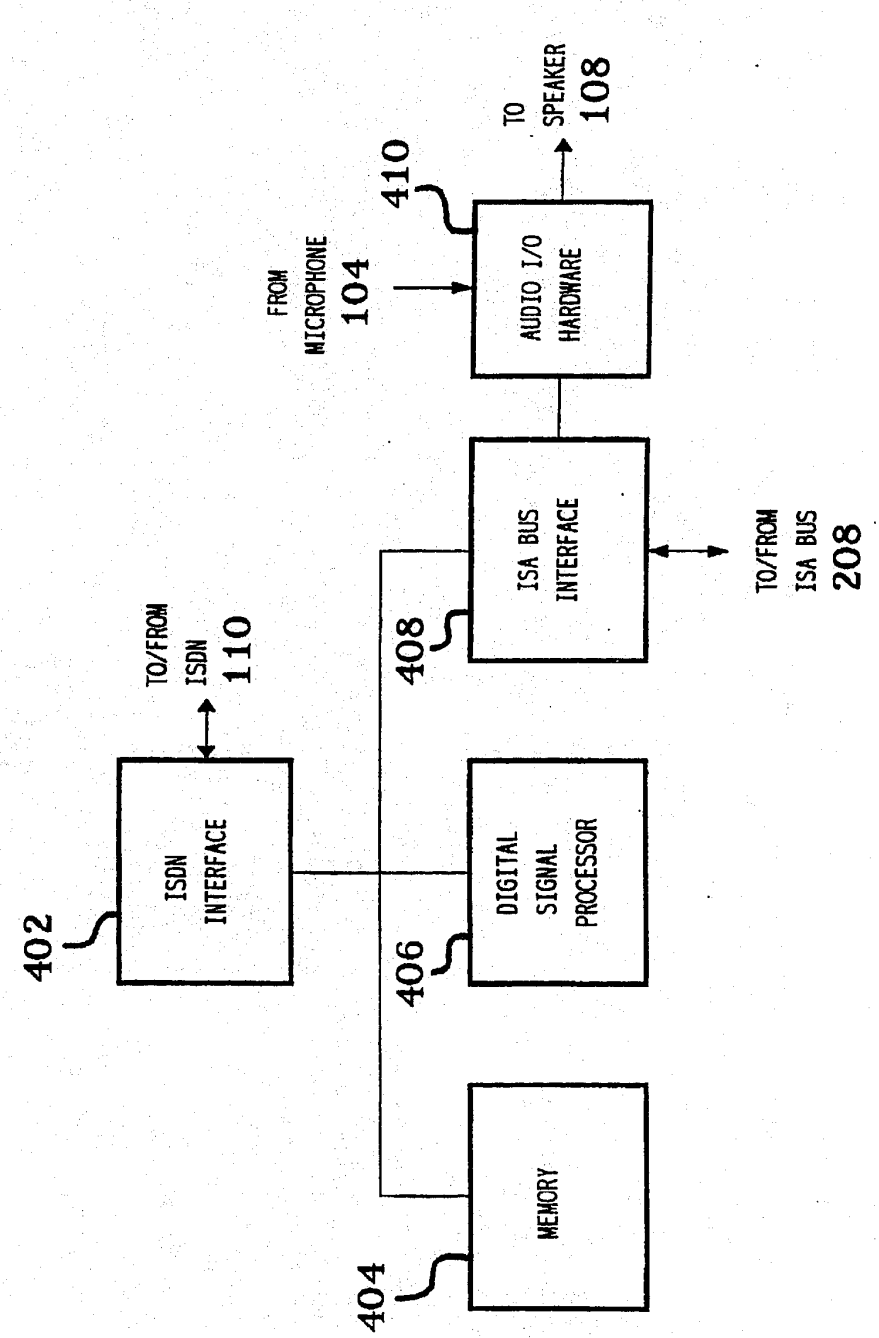

HUAWEI EX. 1016 - 497/714

FIG. 5.

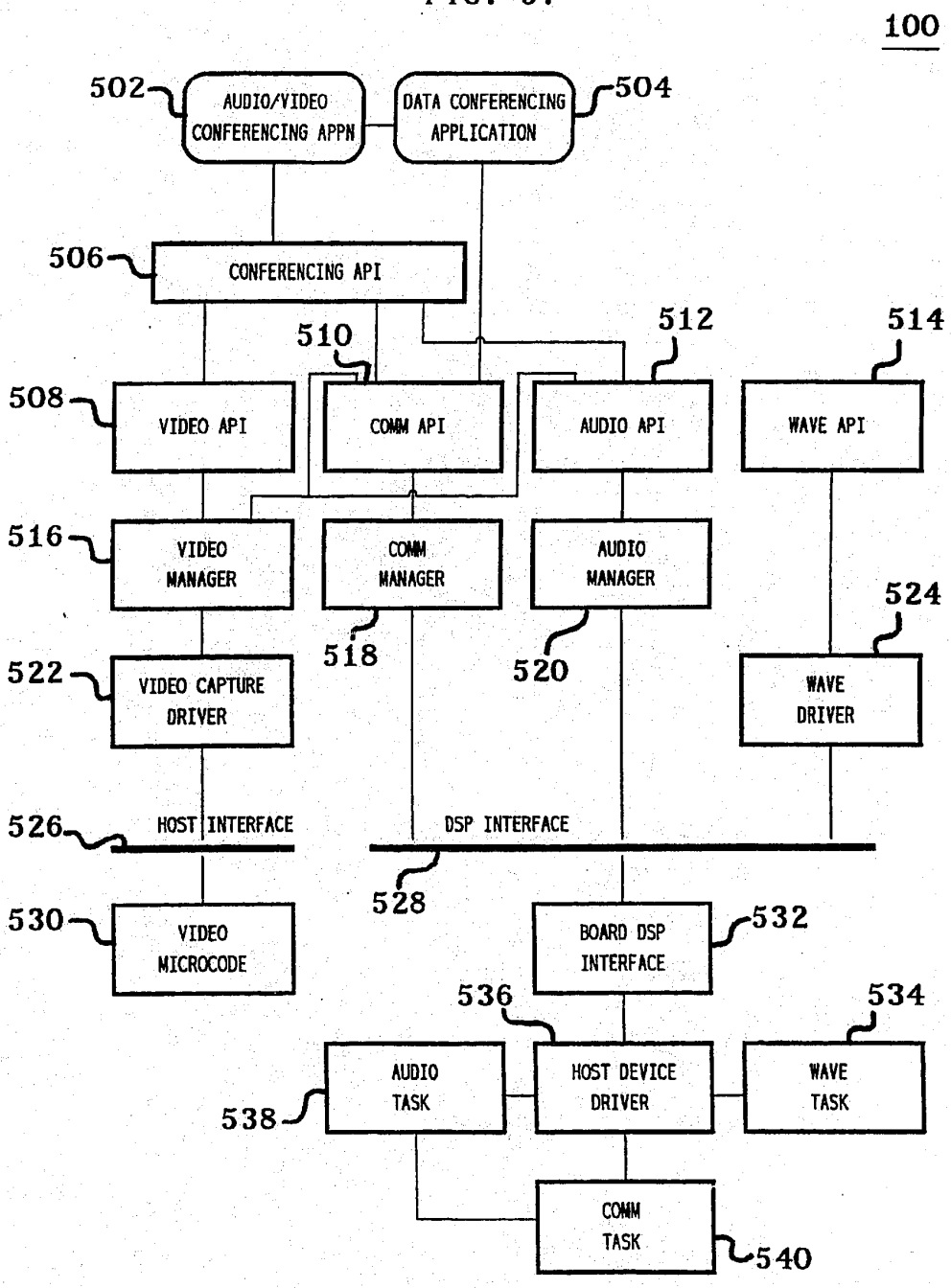

HUAWEI EX. 1016 - 498/714

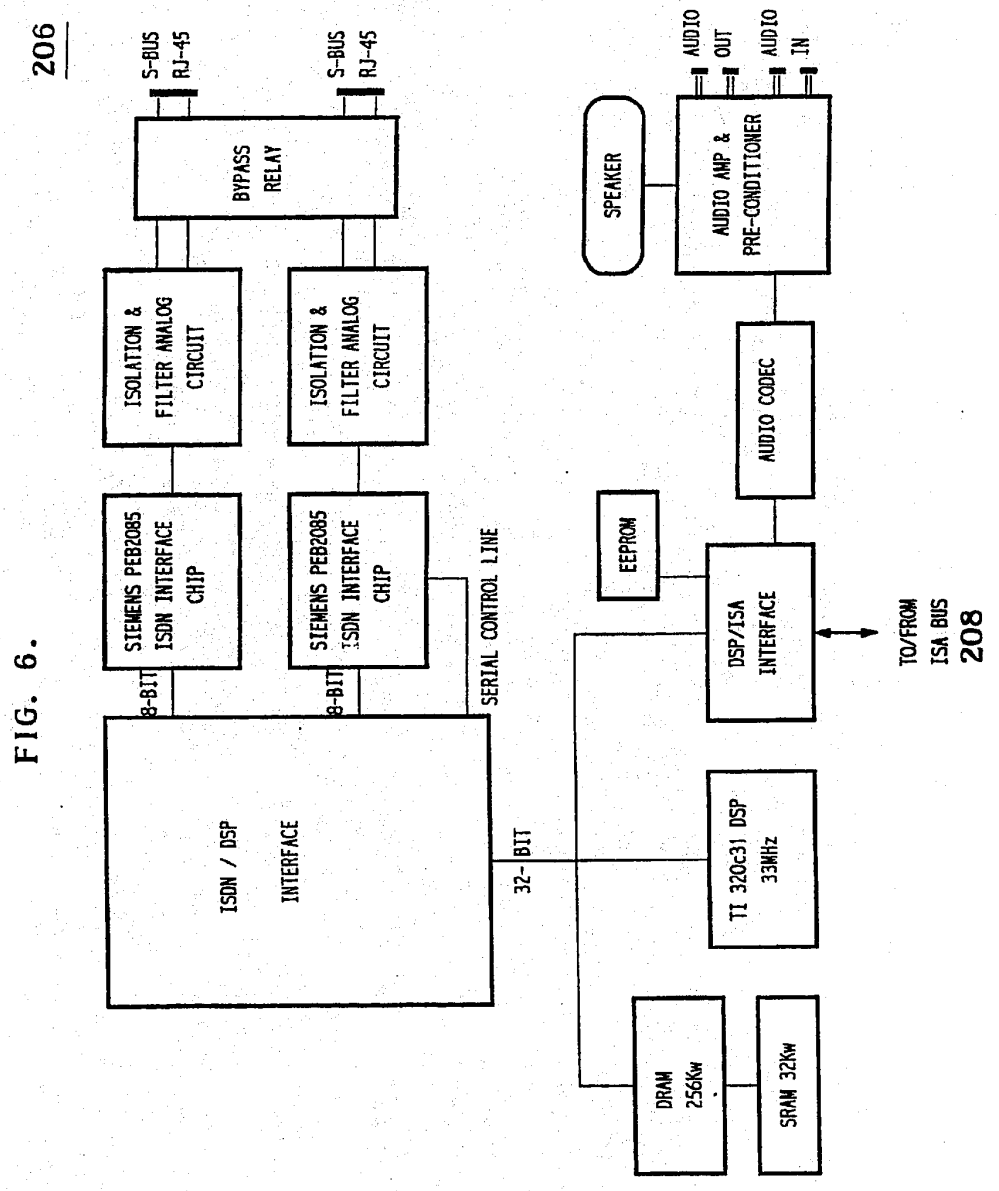
206
S-BUS RJ-45
S-BUS RJ-45
BYPASS RELAY
ISOLATION & FILTER ANALOG CIRCUIT
ISOLATION & FILTER ANALOG CIRCUIT
SIEMENS PEB2085 ISDN INTERFACE CHIP
SIEMENS PEB2085 ISDN INTERFACE CHIP
8-BIT
8-BIT
SERIAL CONTROL LINE
ISDN / DSP INTERFACE
32- BIT
SPEAKER
AUDIO OUT
AUDIO IN
AUDIO AMP & PRE-CONDITIONER
AUDIO CODEC
EEPROM
DSP/ISA INTERFACE
TO/FROM ISA BUS 208
TI 320c31 DSP 33MHz
DRAM 256Kw
SRAM 32Kw

FIG. 6.

FIG. 7.

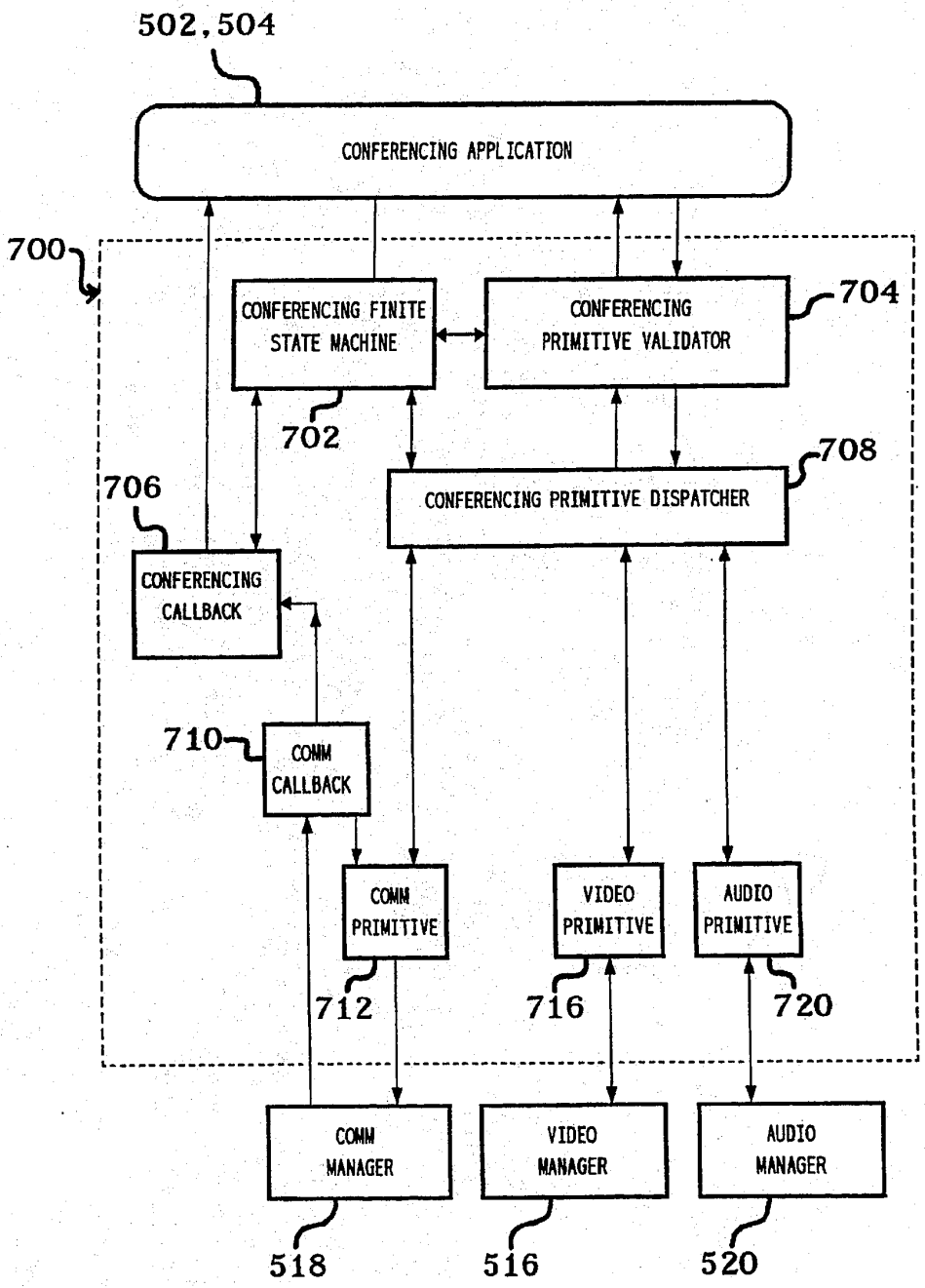

HUAWEI EX. 1016 - 500/714

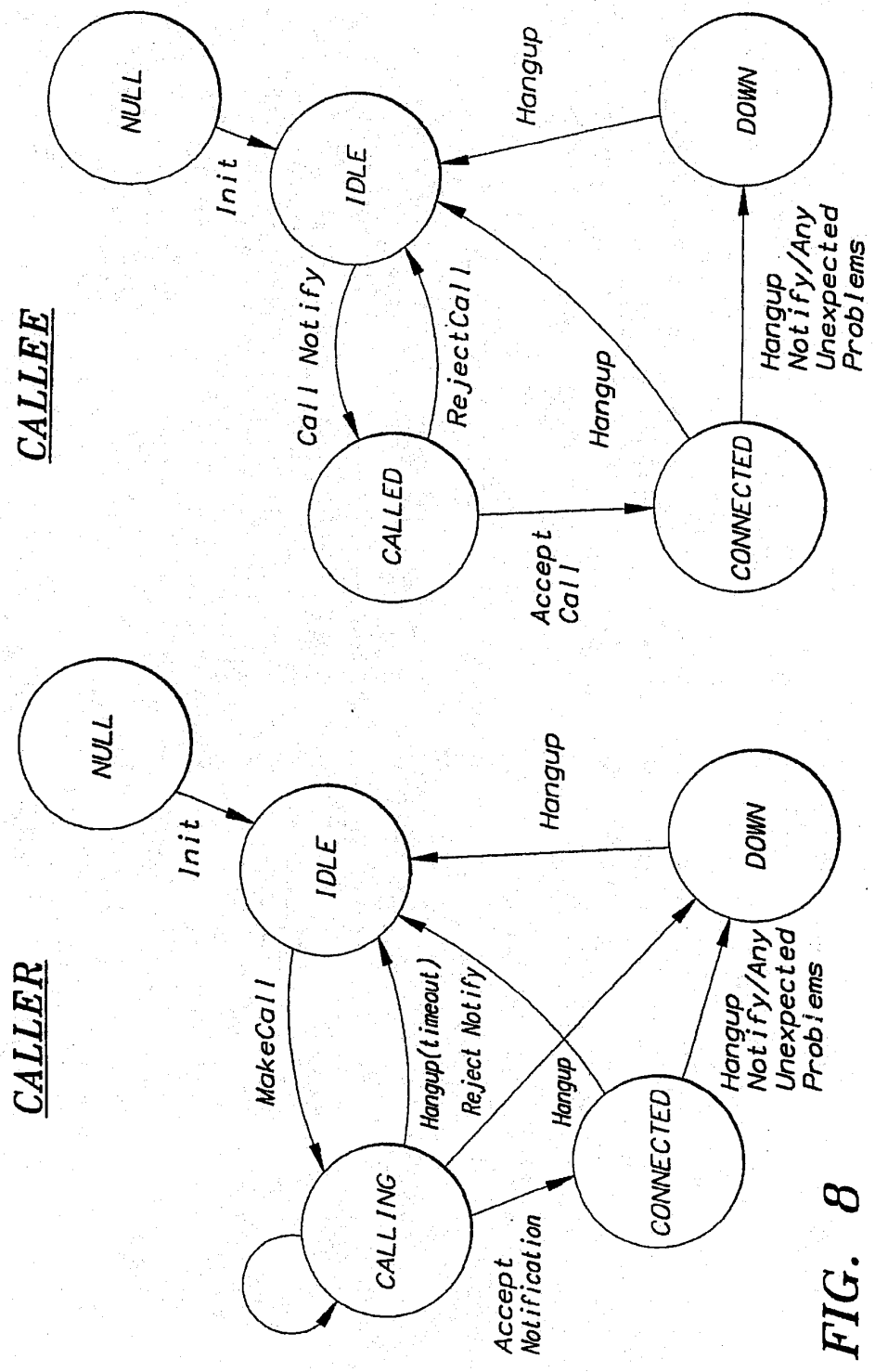

FIG. 8

HUAWEI EX. 1016 - 501/714

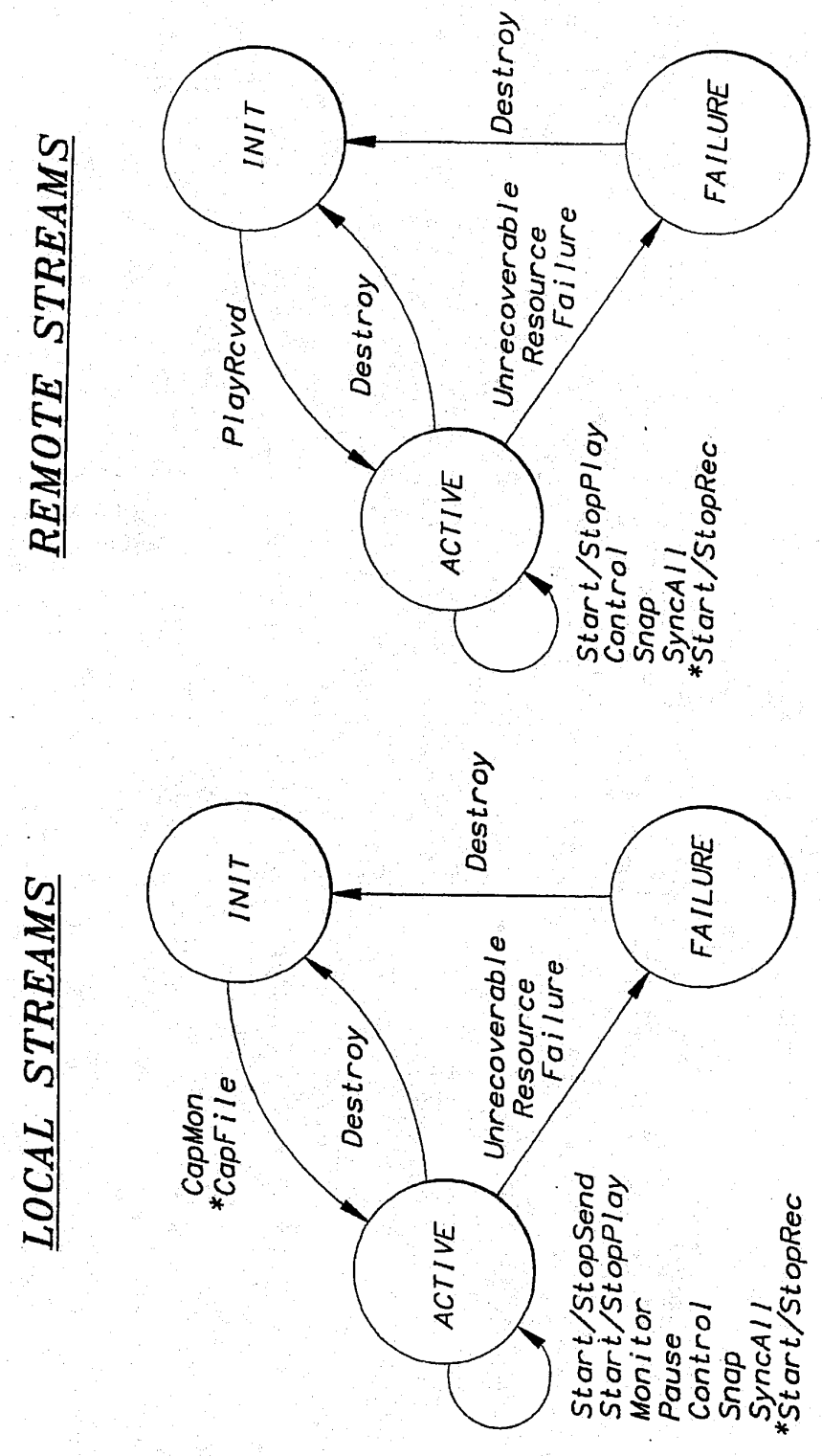

FIG. 9

HUAWEI EX. 1016 - 502/714

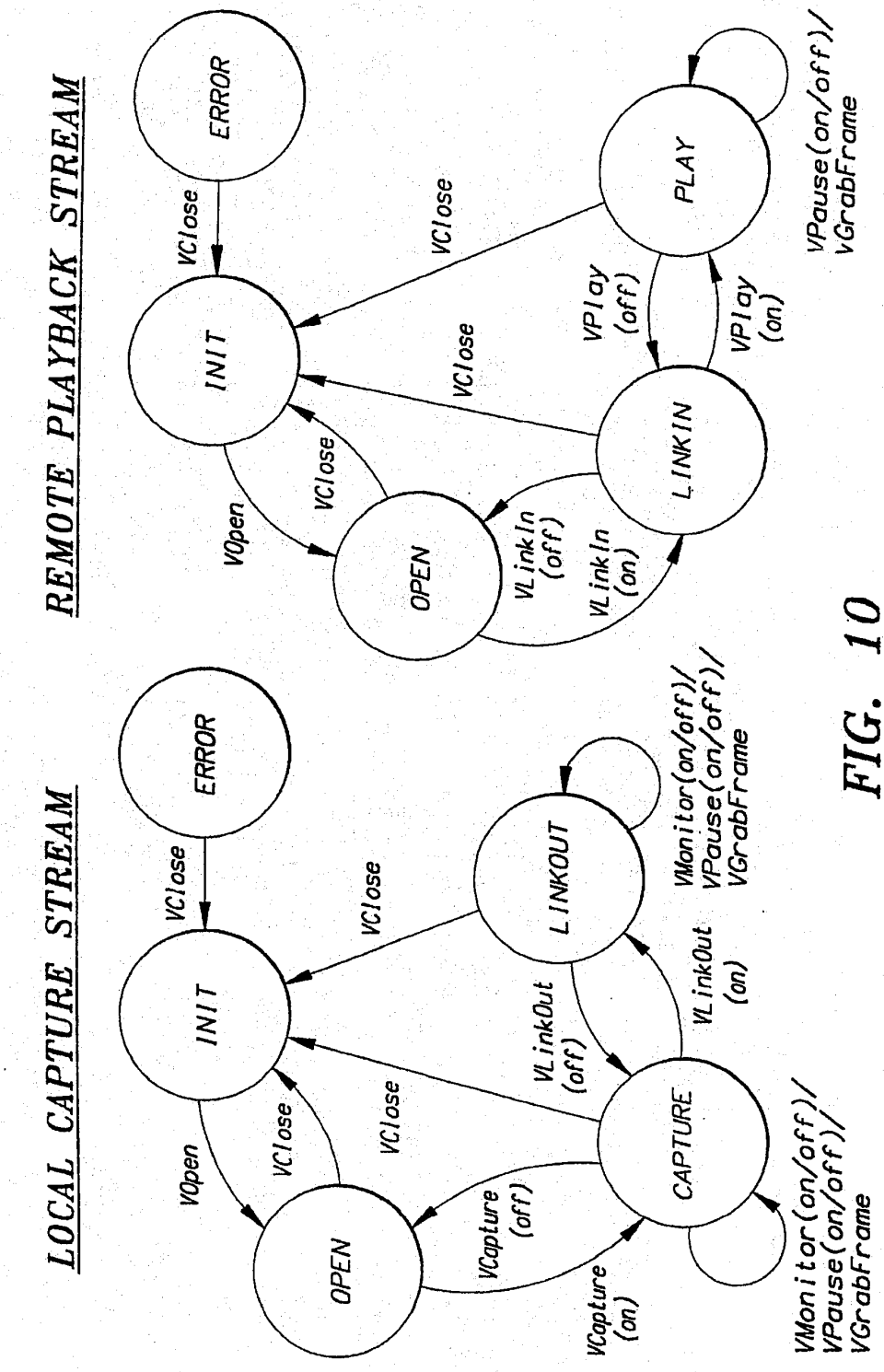

FIG. 10

HUAWEI EX. 1016 - 503/714

FIG. 11.

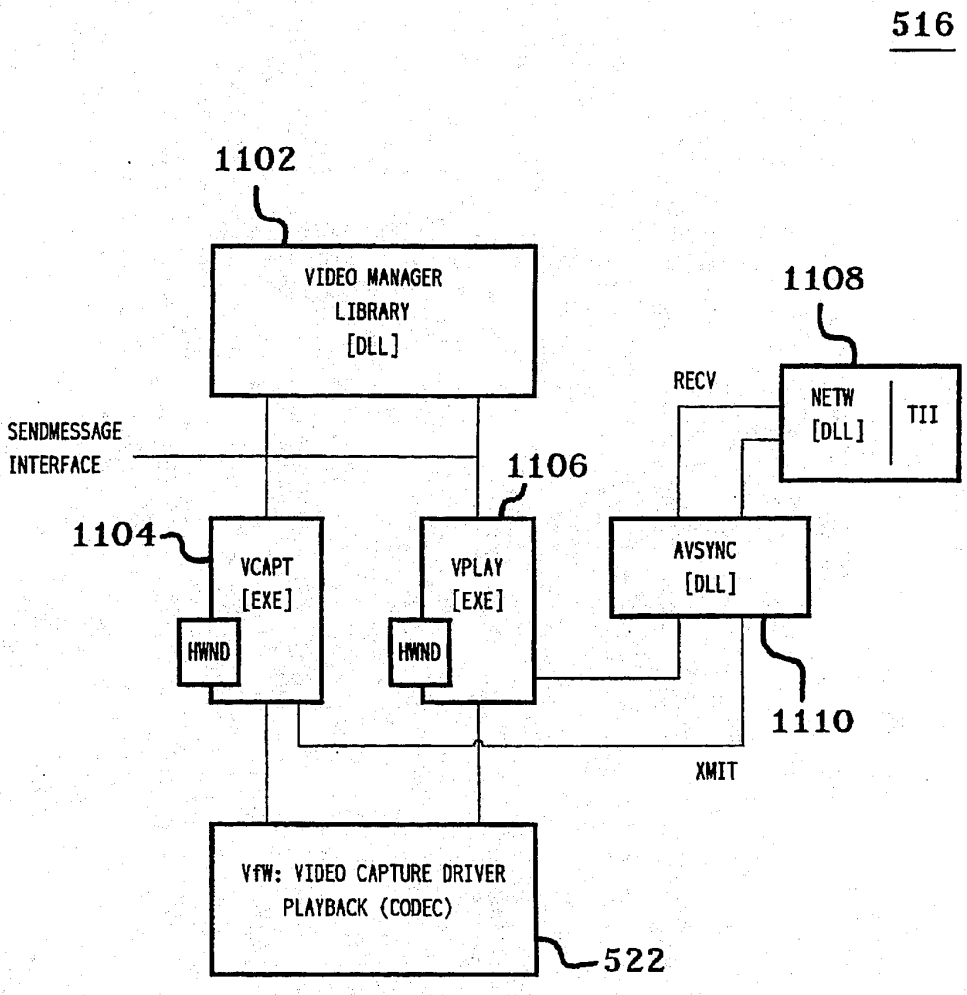

HUAWEI EX. 1016 - 504/714

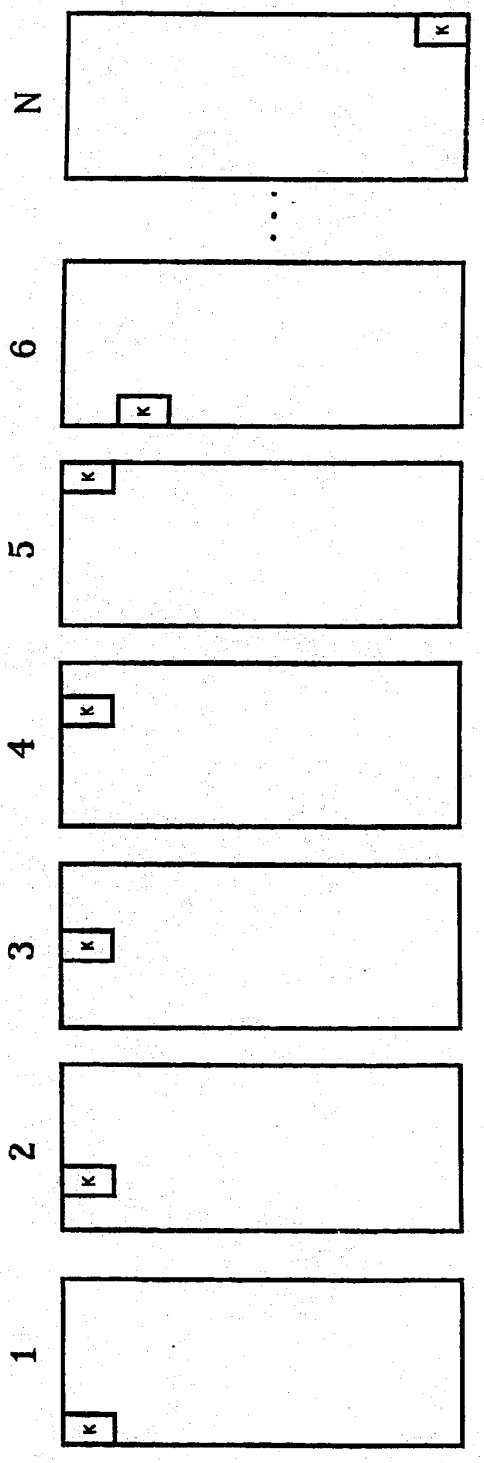

FIG. 12.

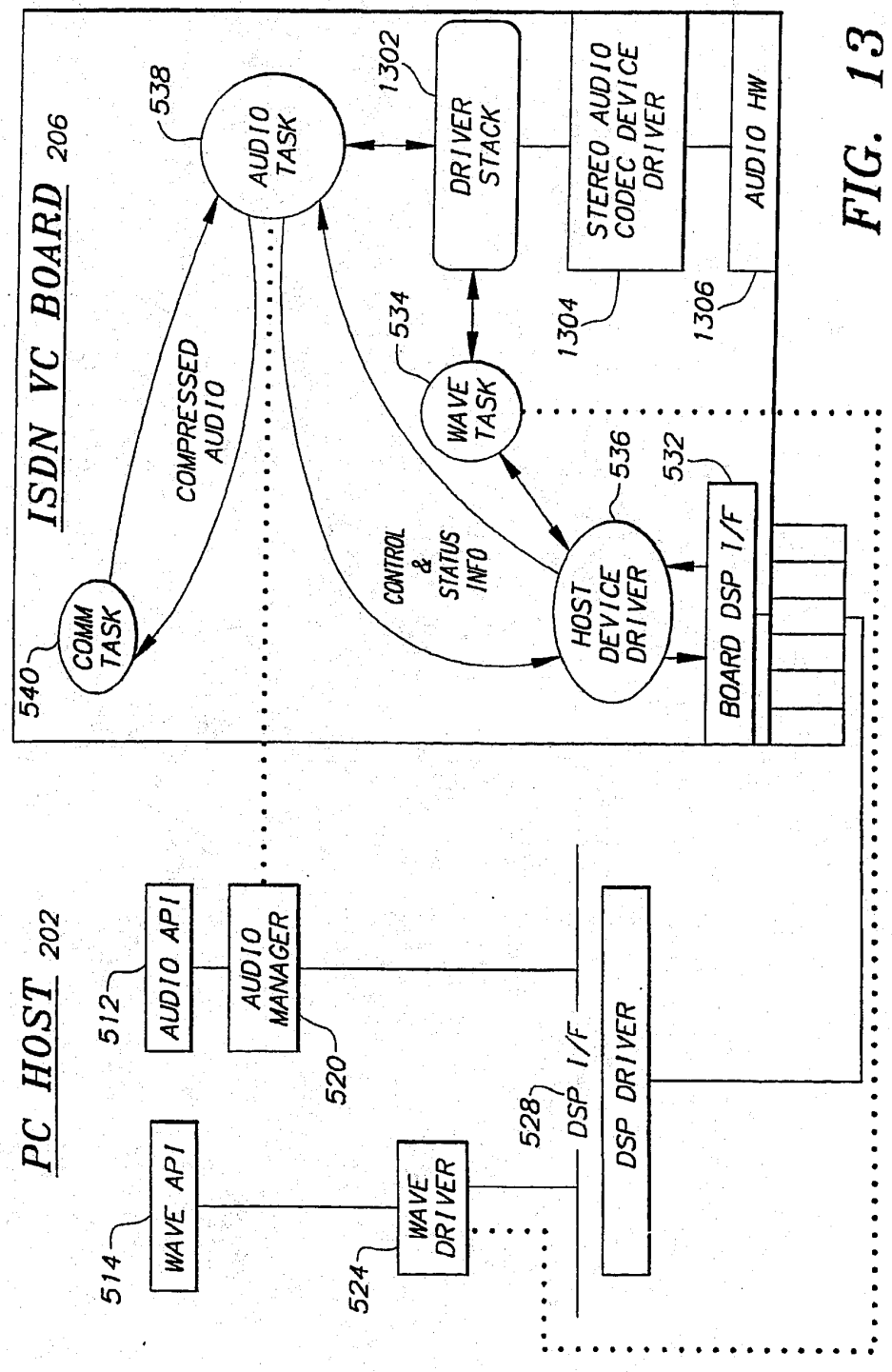

FIG. 13

HUAWEI EX. 1016 - 506/714

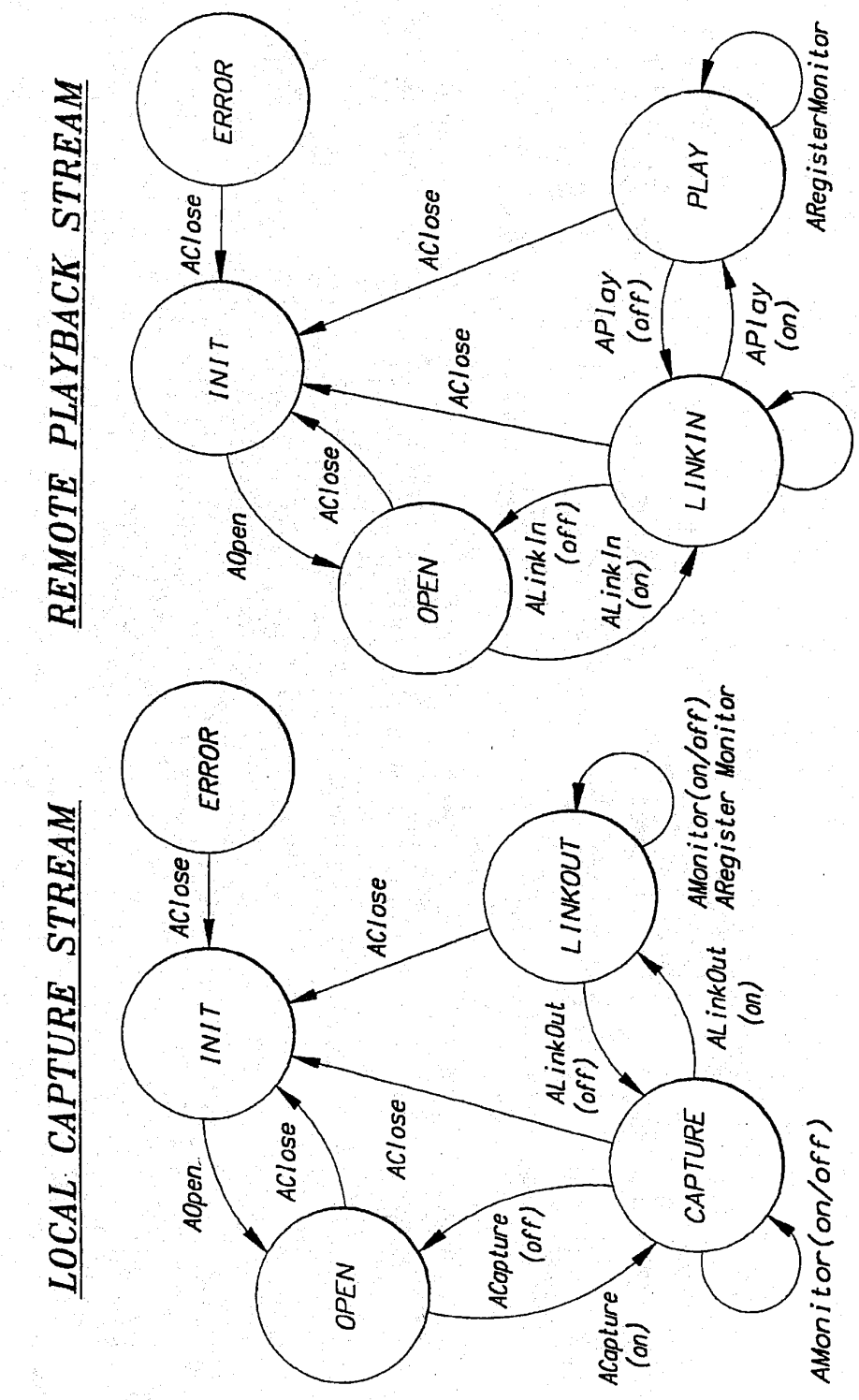

FIG. 14

HUAWEI EX. 1016 - 507/714

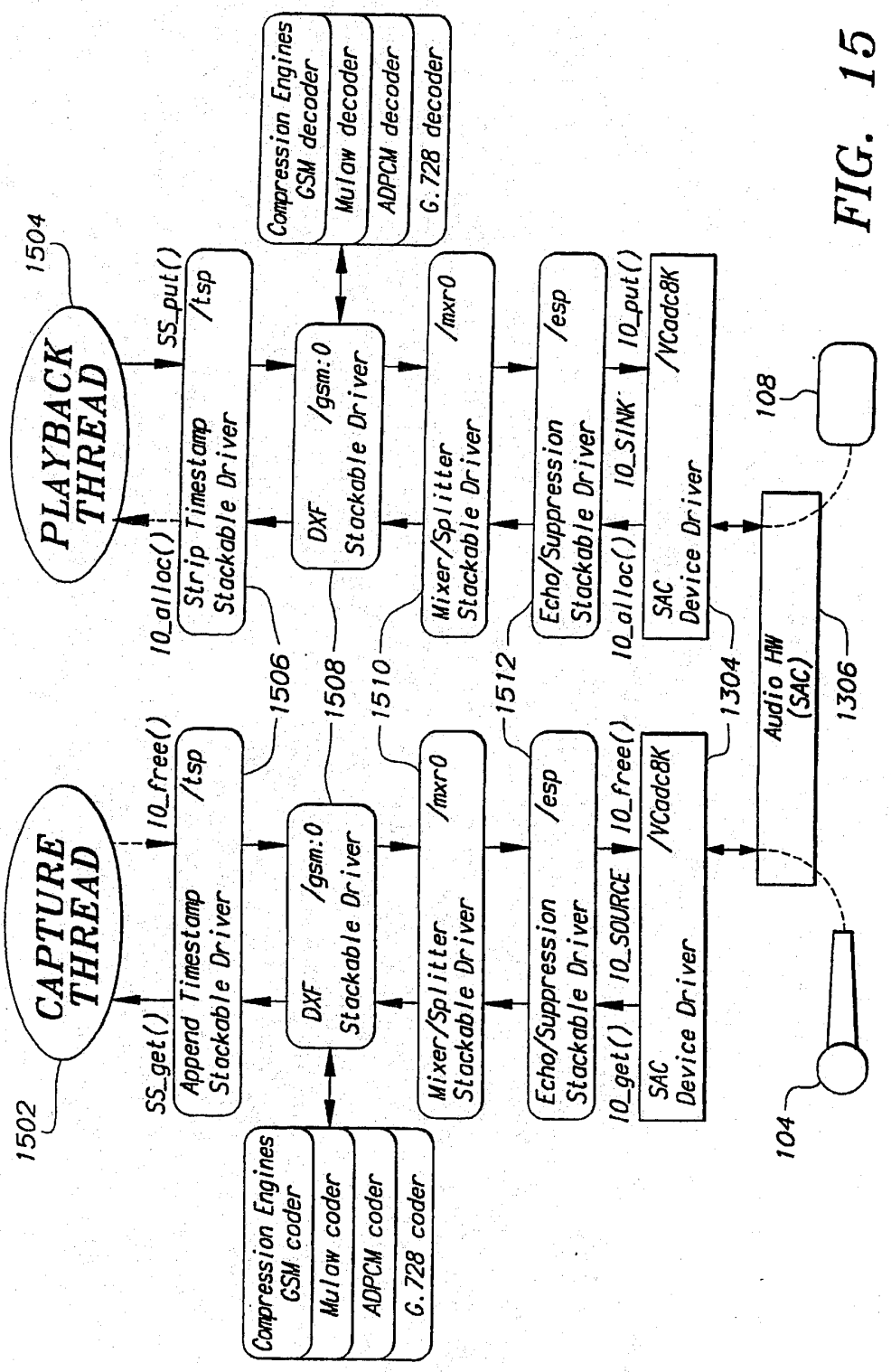

FIG. 15

HUAWEI EX. 1016 - 508/714

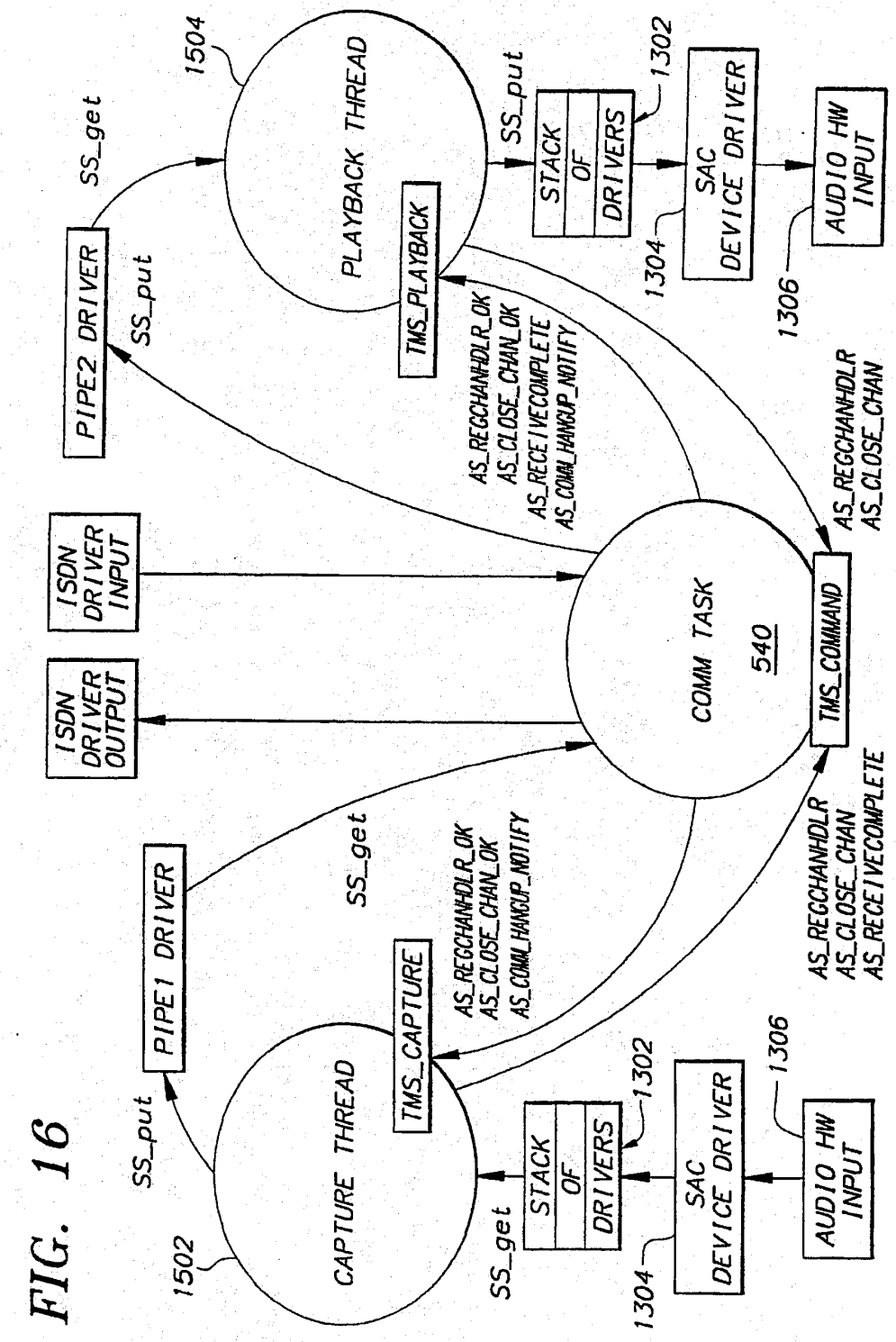

FIG. 16

HUAWEI EX. 1016 - 509/714

FIG. 17.

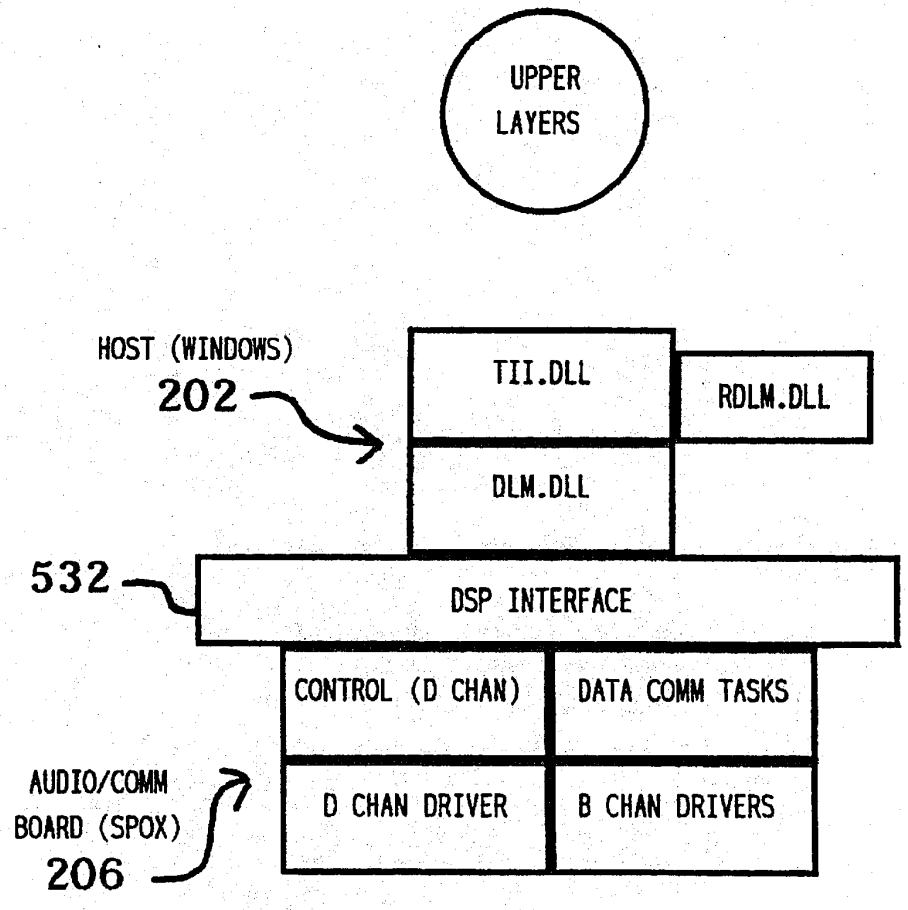

HUAWEI EX. 1016 - 510/714

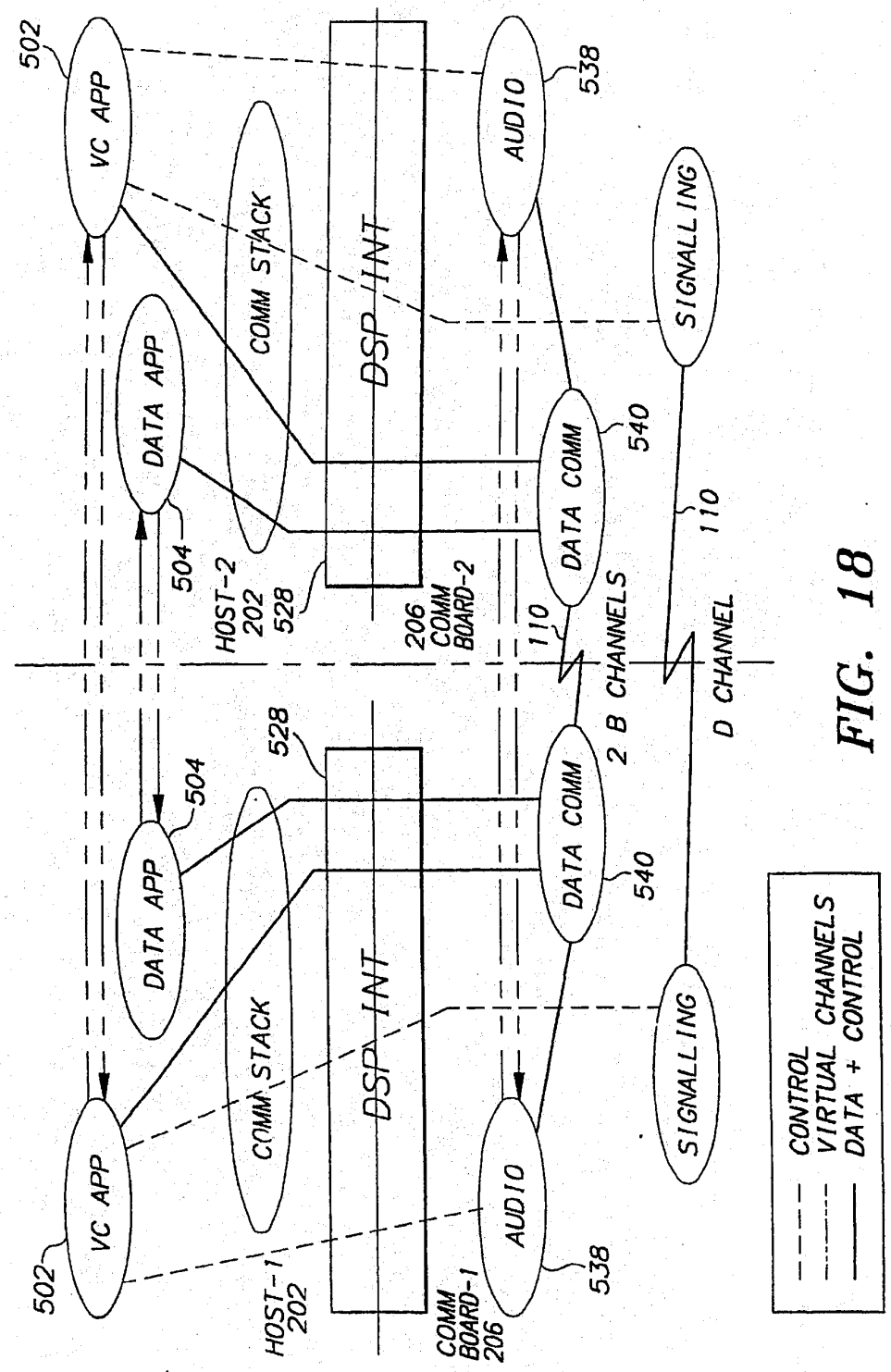
502
VC APP
DATA APP
504
COMM STACK
DSP INT
AUDIO
538
SIGNALLING
DATA COMM
540
HOST-2
202
528
206
COMM
BOARD-2
110
2 B CHANNELS
D CHANNEL
CONTROL
VIRTUAL CHANNELS
DATA + CONTROL
HOST-1
202
COMM
BOARD-1
206

FIG. 18

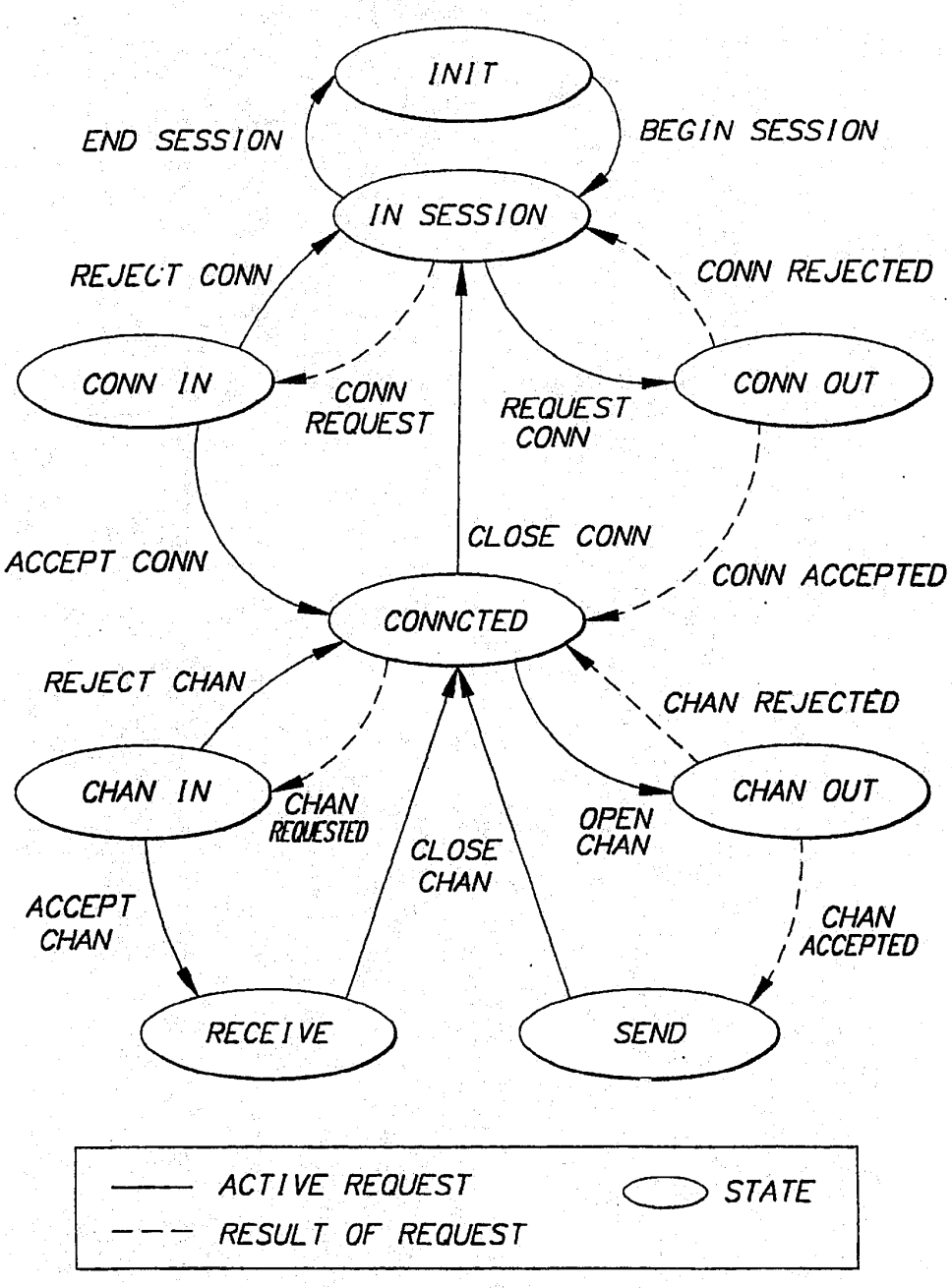
INIT
END SESSION
BEGIN SESSION
IN SESSION
REJECT CONN
CONN REJECTED
CONN IN
CONN REQUEST
REQUEST CONN
CONN OUT
ACCEPT CONN
CLOSE CONN
CONN ACCEPTED
CONNCTED
REJECT CHAN
CHAN REJECTED
CHAN IN
CHAN REQUESTED
CLOSE CHAN
OPEN CHAN
CHAN OUT
ACCEPT CHAN
CHAN ACCEPTED
RECEIVE
SEND
ACTIVE REQUEST
STATE
RESULT OF REQUEST

FIG. 19

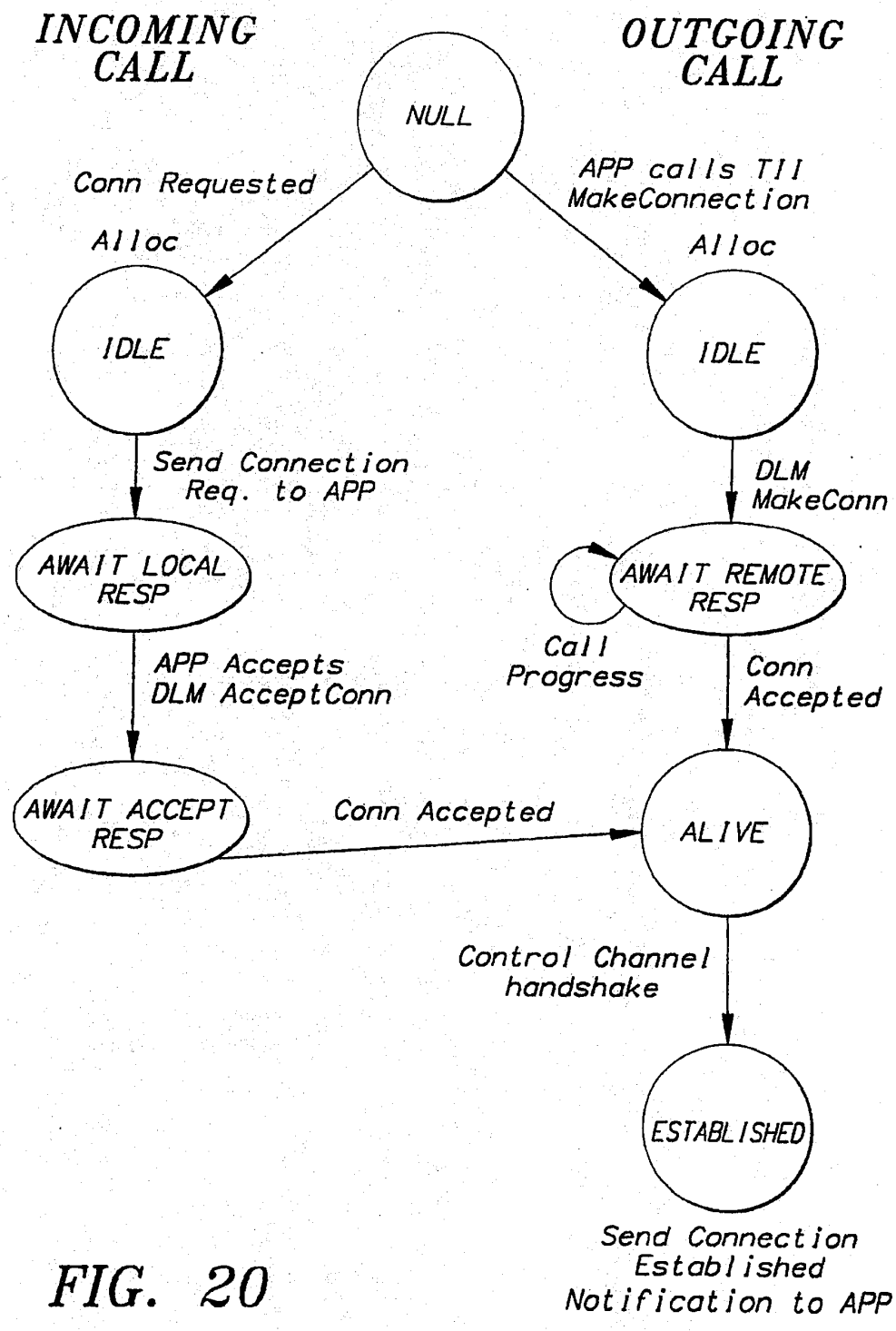

FIG. 20

HUAWEI EX. 1016 - 513/714

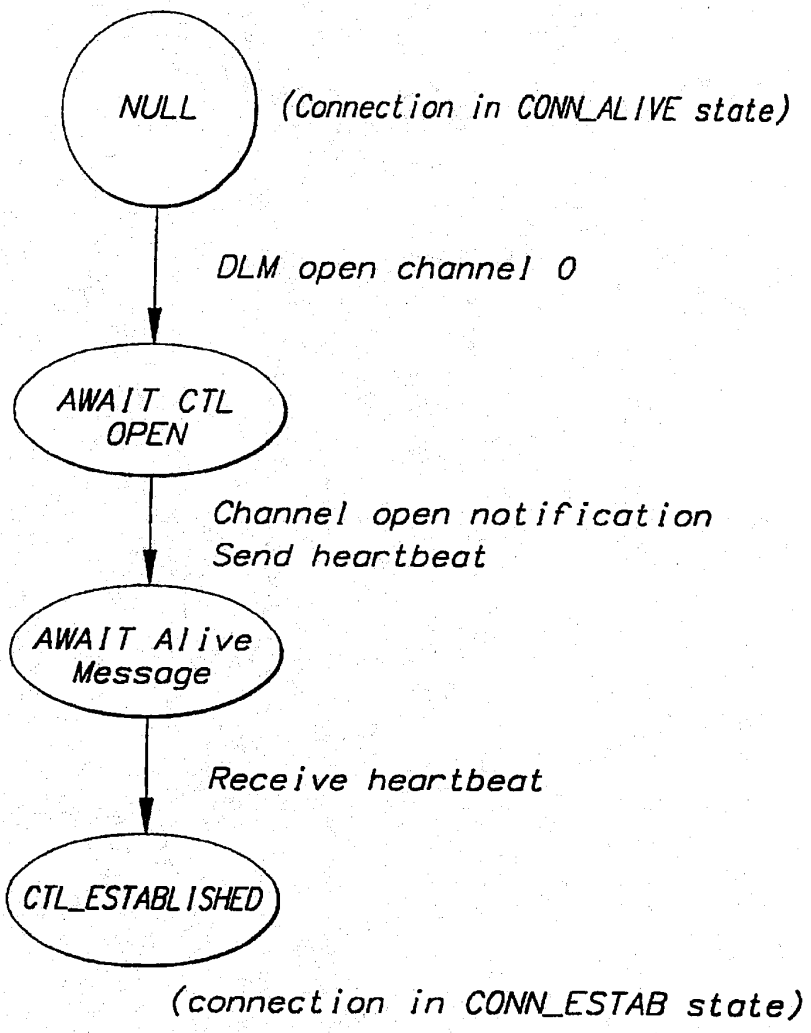
NULL
(Connection in CONN_ALIVE state)
DLM open channel 0
AWAIT CTL OPEN
Channel open notification
Send heartbeat
AWAIT Alive Message
Receive heartbeat
CTL_ESTABLISHED
(connection in CONN_ESTAB state)

FIG. 21

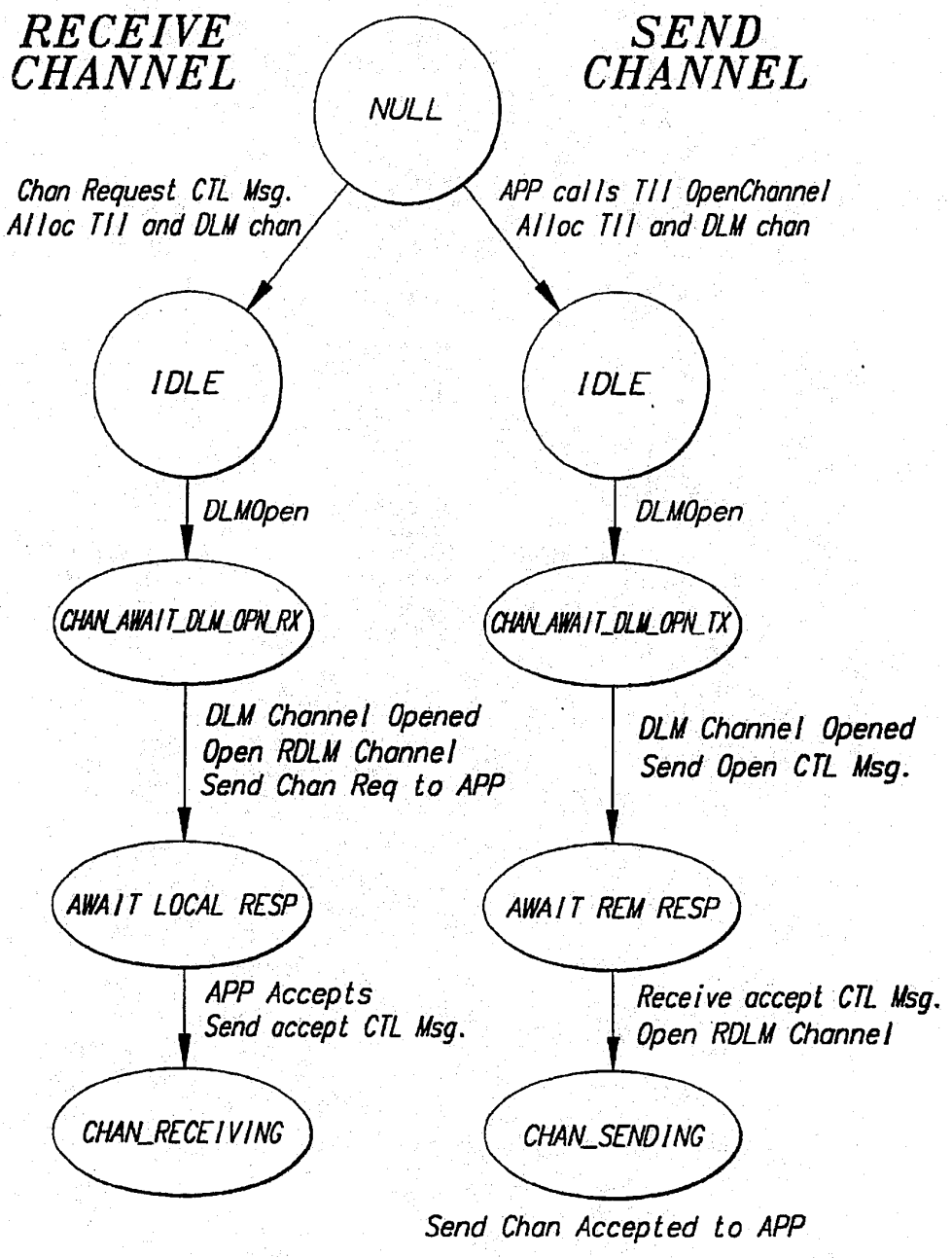

FIG. 22

HUAWEI EX. 1016 - 515/714

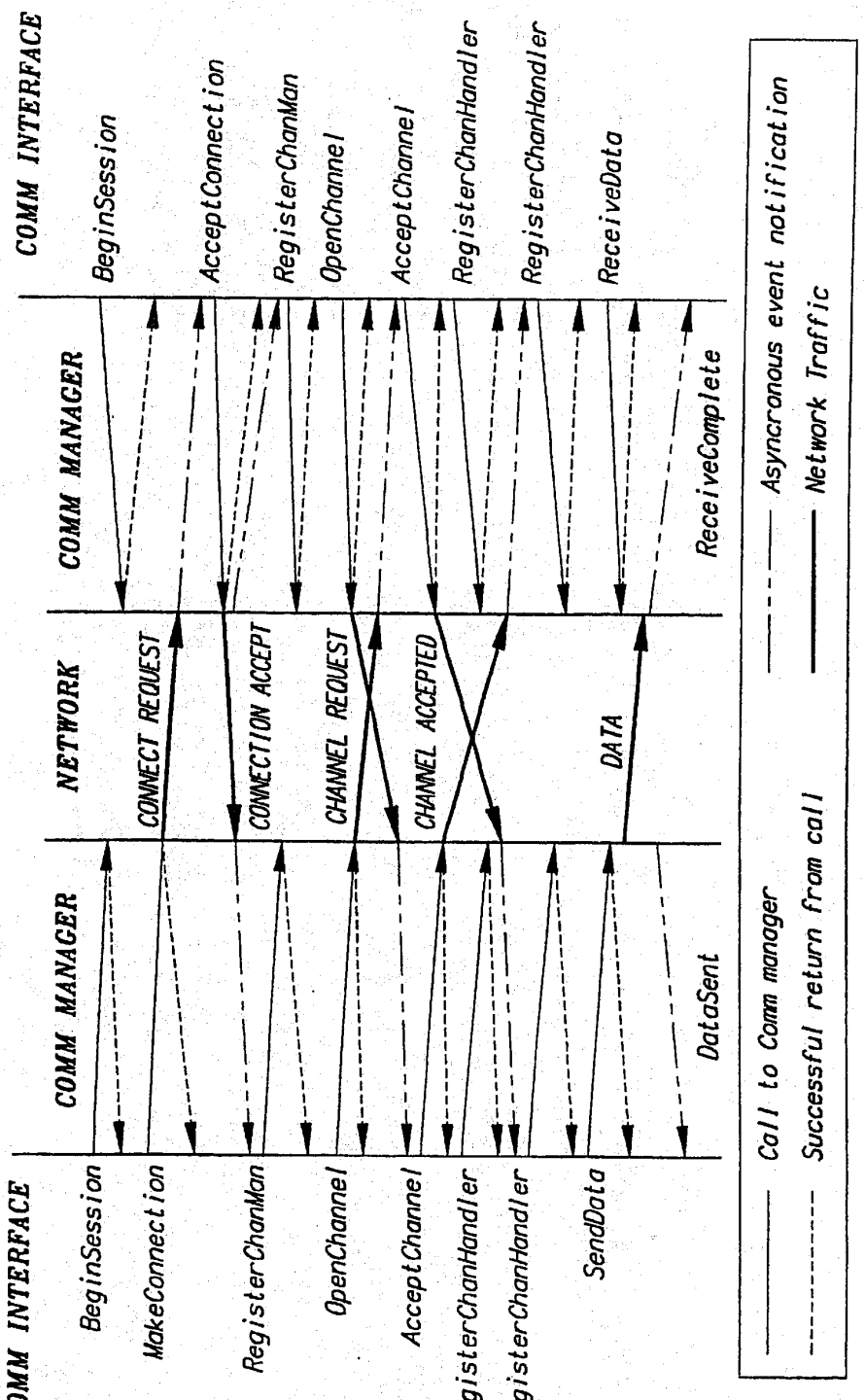

FIG. 23

HUAWEI EX. 1016 - 516/714

FIG. 24.

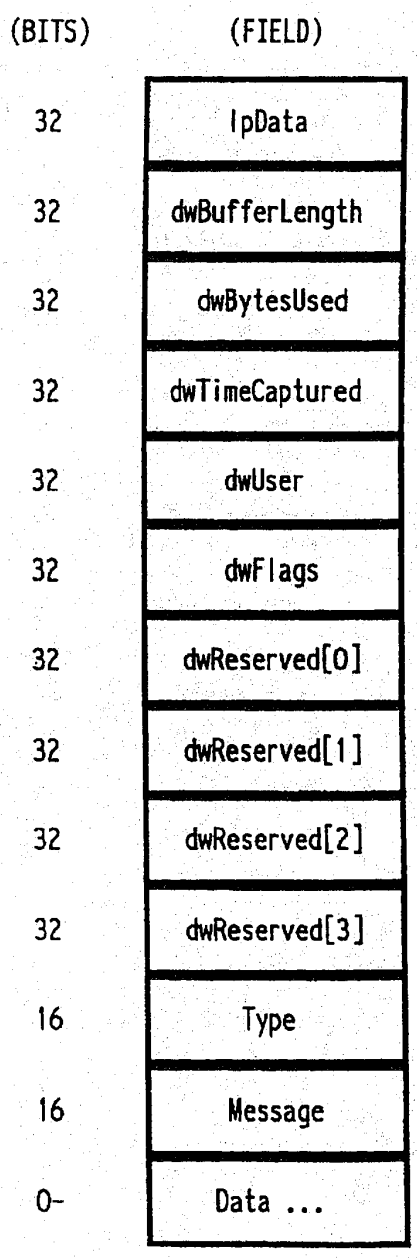

HUAWEI EX. 1016 - 517/714

FIG. 25.

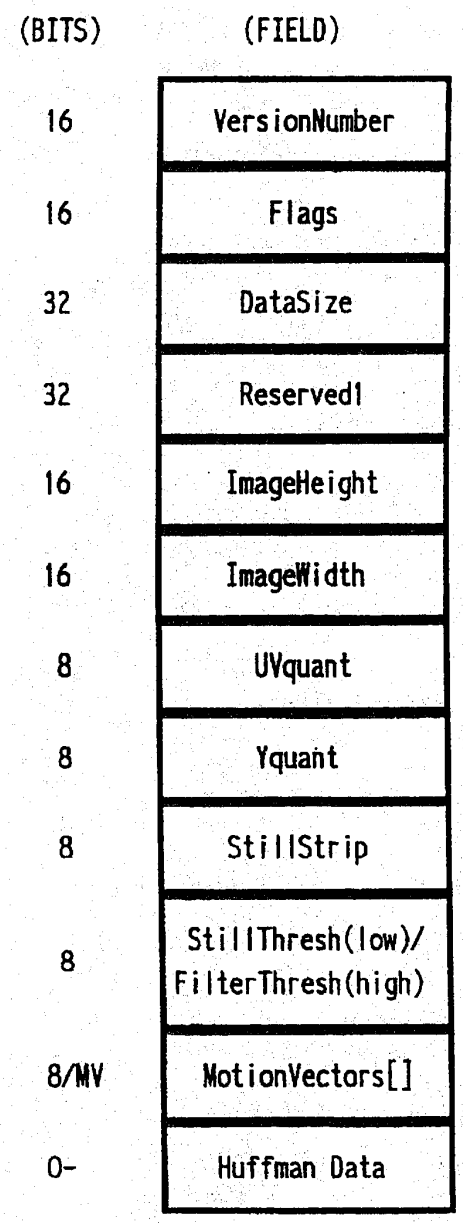
(BITS)
(FIELD)
16
VersionNumber
16
Flags
32
DataSize
32
Reserved1
16
ImageHeight
16
ImageWidth
8
UVquant
8
Yquant
8
StillStrip
8
StillThresh(low)/
FilterThresh(high)
8/MV
MotionVectors[]
0-
Huffman Data

FIG. 26.

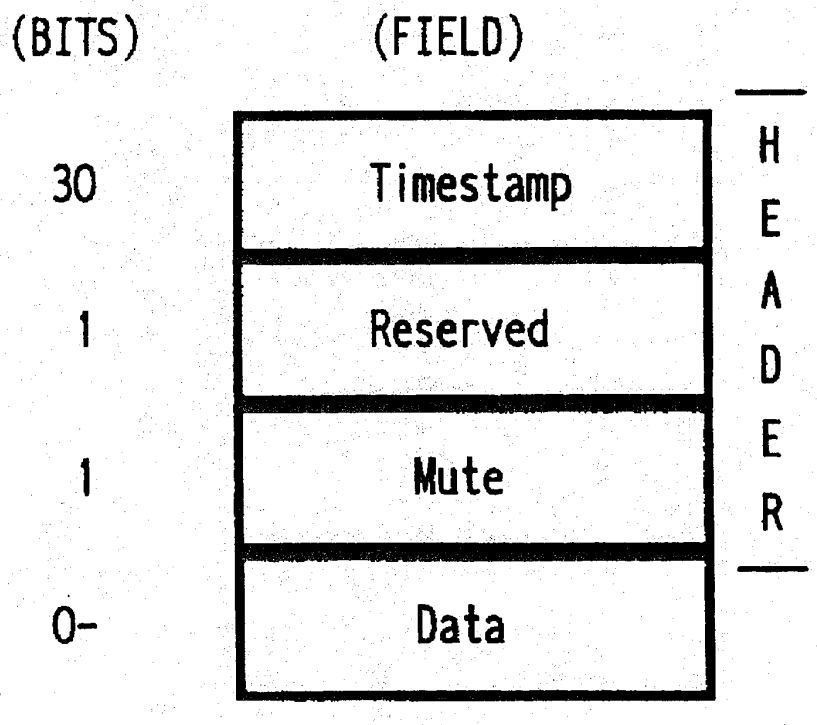

FIG. 27.

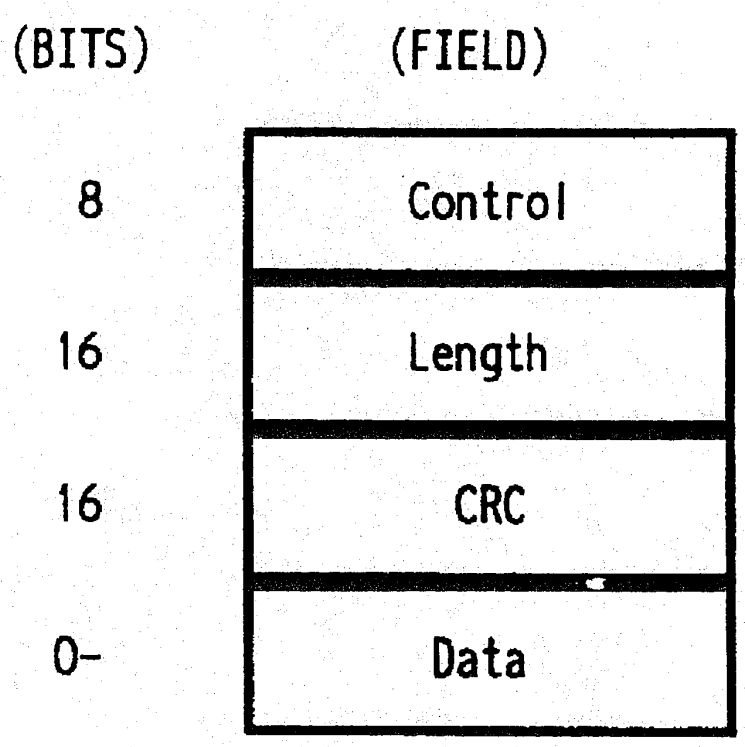

HUAWEI EX. 1016 - 520/714

FIG. 28.

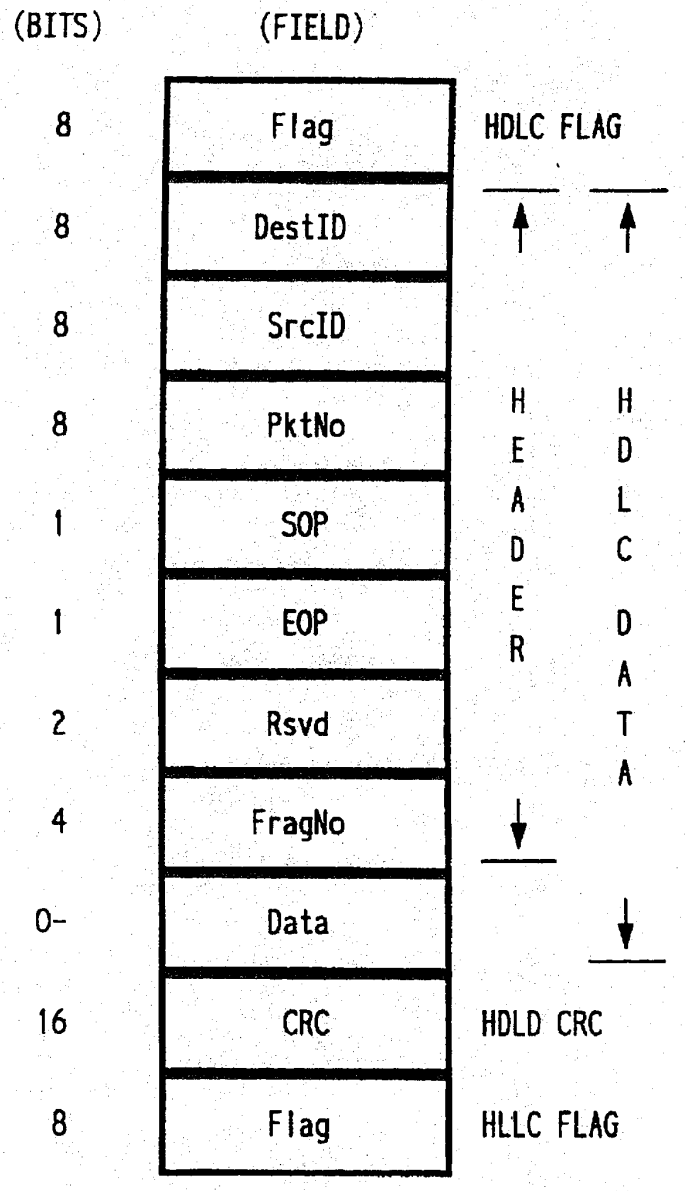

HUAWEI EX. 1016 - 521/714

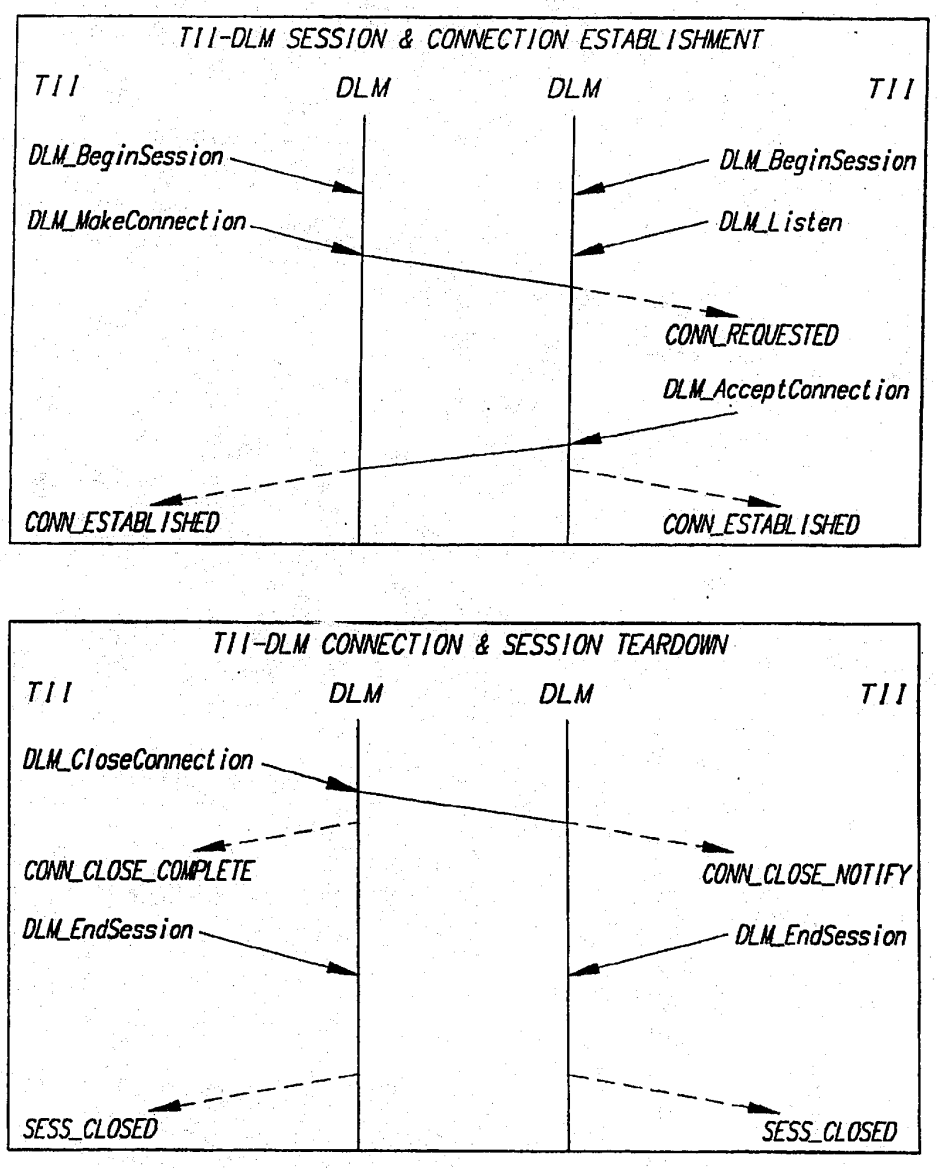

FIG. 29

HUAWEI EX. 1016 - 522/714

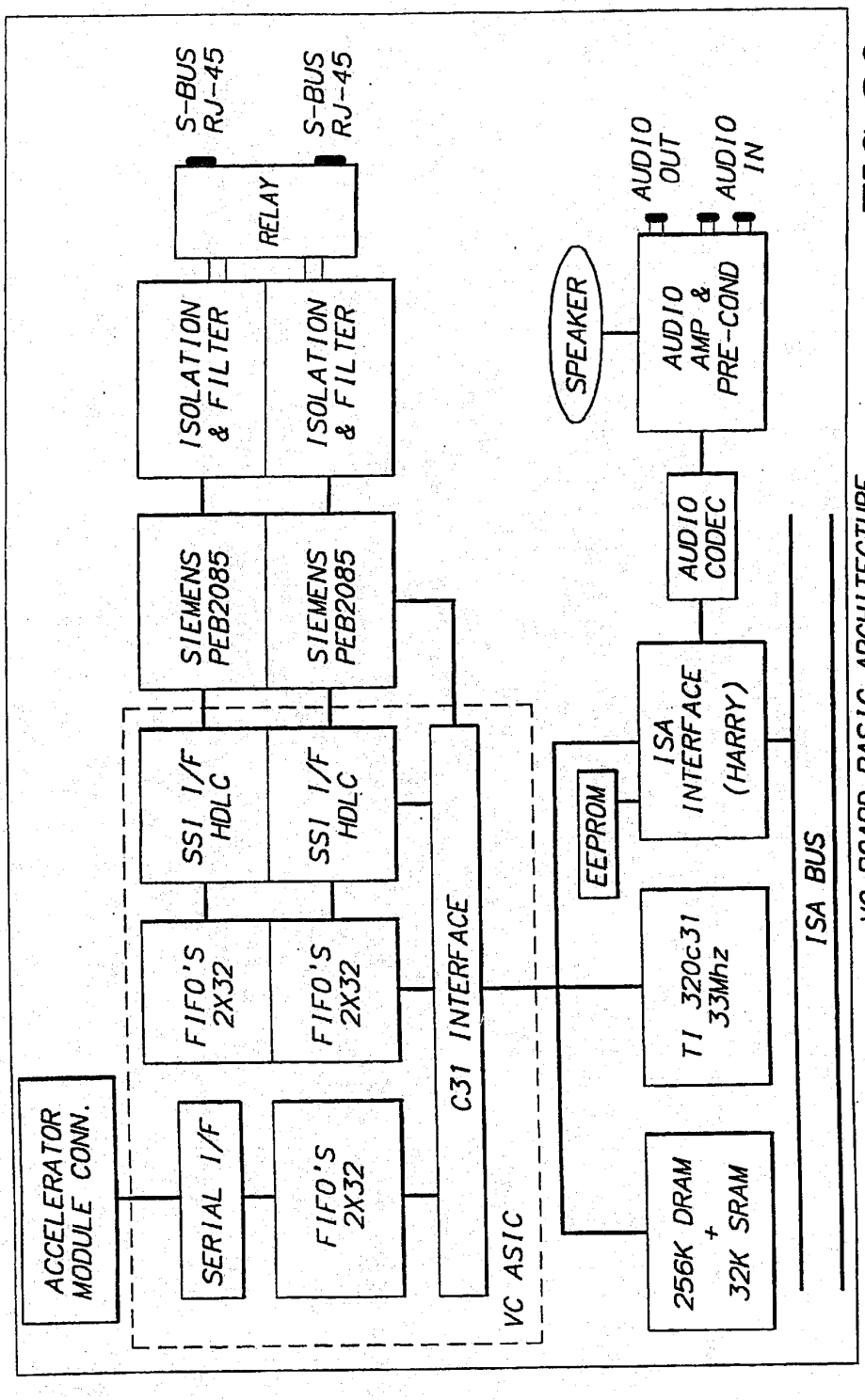

FIG. 30

HUAWEI EX. 1016 - 523/714

FIG. 31

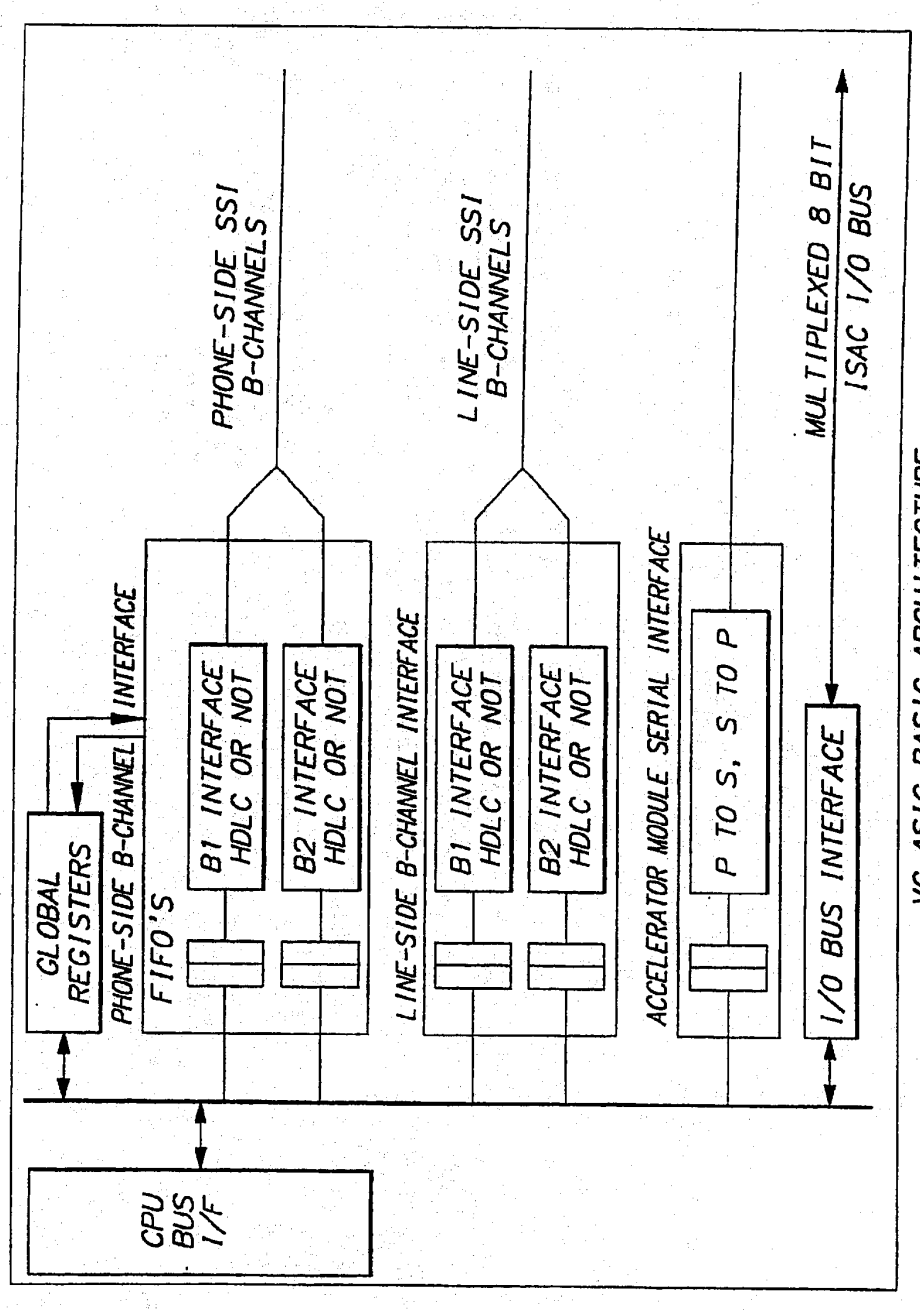

HUAWEI EX. 1016 - 524/714

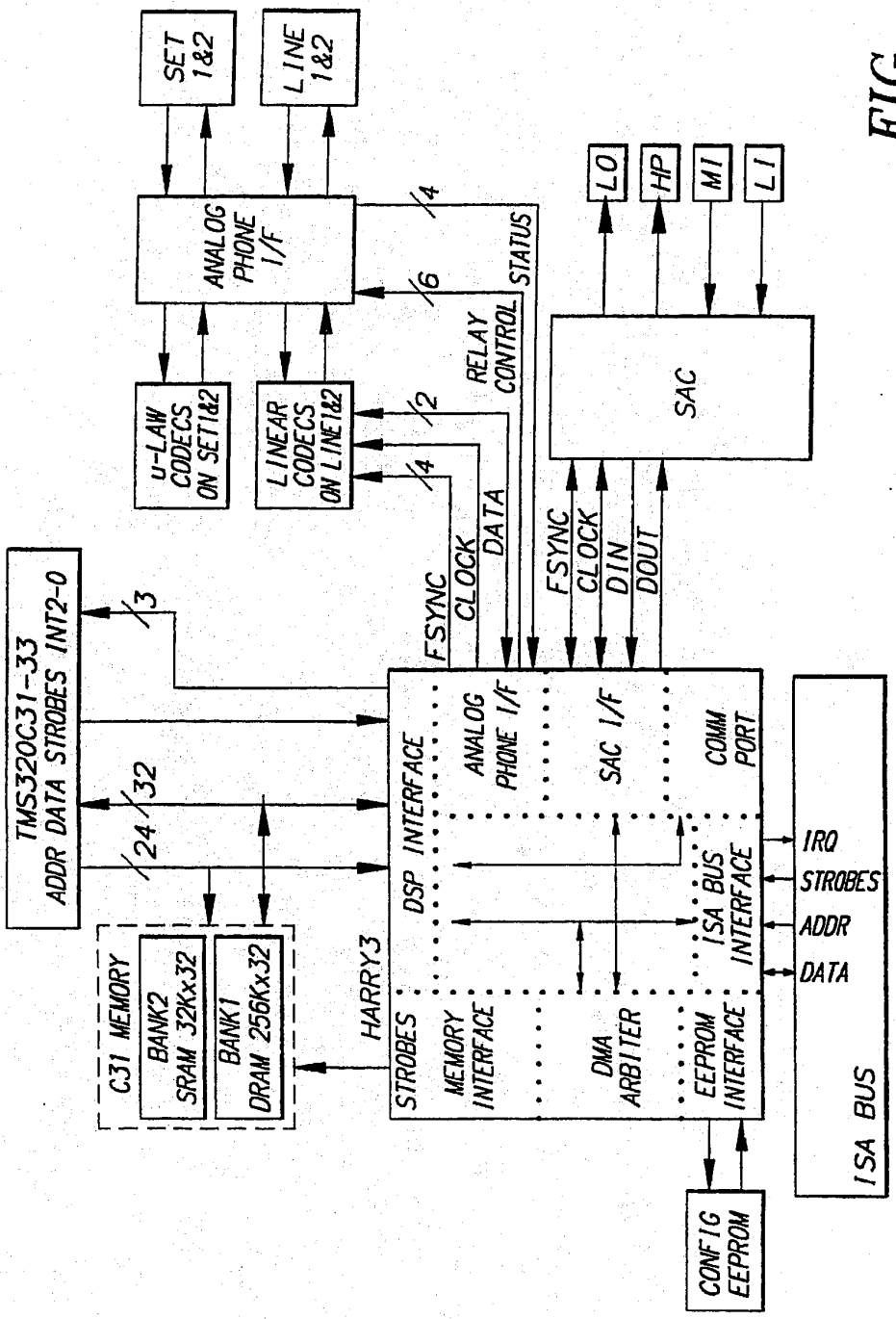

FIG. 32

HUAWEI EX. 1016 - 525/714

ENCODING AND DECODING VIDEO SIGNALS USING ADAPTIVE FILTER SWITCHING CRITERIA

This is a continuation of copending application Ser. No. 08/158,855 filed on Nov. 24, 1993.

BACKGROUND OF THE INVENTION

1. Field of the Invention

The present invention relates to image processing, and, in particular, to computer-implemented processes and systems for decompressing compressed images.

2. Description of the Related Art

It is desirable to provide real-time audio, video, and data conferencing between personal computer (PC) systems communicating over an integrated services digital network (ISDN). In particular, it is desirable to provide a video compression/decompression process that allows (1) real-time compression of video images for transmission over an ISDN and (2) real-time decompression and playback on the host processor of a PC conferencing system.

It is accordingly an object of this invention to overcome the disadvantages and drawbacks of the known art and to provide a video decompression process that allows real-time audio, video, and data conferencing between PC systems operating in non-real-time windowed environments.

Further objects and advantages of this invention will become apparent from the detailed description of a preferred embodiment which follows.

SUMMARY OF THE INVENTION

The present invention is a computer-implemented process and apparatus for encoding video signals. According to a preferred embodiment, one or more training video frames are encoded using a selected quantization level to generate one or more encoded training video frames. The encoded training video frames are decoded to generate one or more decoded training video frames and one or more energy measure values are generated corresponding to the decoded training video frames. This training processing is performed for a plurality of quantization levels and an energy measure threshold value is selected for each of the quantization levels in accordance with the decoded training video frames. A first reference frame is generated corresponding to a first video frame. A block of a second video frame is encoded using the first reference frame and a selected quantization level to generate a block of an encoded second video frame. The block of the encoded second video frame is decoded to generate a block of a second reference frame, by: (1) generating an energy measure value corresponding to the block of the encoded second video frame; (2) comparing the energy measure value with the energy measure threshold value corresponding to the selected quantization level for the block; and (3) applying a filter to generate the block of the second reference frame in accordance with the comparison. A third video frame is encoded using the second reference frame.

According to another preferred embodiment, a first reference frame is generated corresponding to a first video frame. A block of a second video frame is encoded using the first reference frame and a selected quantization level to generate a block of an encoded second video frame. The block of the encoded second video frame is decoded to generate a block of a second reference frame, by: (1) generating an energy measure value corresponding to the block of the encoded second video frame; (2) comparing the energy measure value with an energy measure threshold value corresponding to the selected quantization level for the block; and (3) applying a filter to generate the block of the second reference frame in accordance with the comparison. A third video frame is encoded using the second reference frame. The energy measure threshold value corresponding to the selected quantization level for the block having been determined by: encoding one or more training video frames using each of a plurality of quantization levels to generate a plurality of encoded training video frames; decoding the encoded training video frames to generate a plurality of decoded training video frames; generating a plurality of energy measure values corresponding to the decoded training video frames; and selecting an energy measure threshold value for each of the quantization levels in accordance with the decoded training video frames.

The present invention is also a computer-implemented process and apparatus for decoding video signals. According to a preferred embodiment, an encoded first video frame is decoded to generate a first reference frame. A block of an encoded second video frame is decoded to generate a block of a second reference frame, by: (1) generating an energy measure value corresponding to the block of the encoded second video frame; (2) comparing the energy measure value with an energy measure threshold value corresponding to a selected quantization level for the block; and (3) applying a filter to generate the block of the second reference frame in accordance with the comparison. An encoded third video frame is decoded using the second reference frame. The energy measure threshold value corresponding to the selected quantization level for the block having been determined by: encoding one or more training video frames using each of a plurality of quantization levels to generate a plurality of encoded training video frames; decoding the encoded training video frames to generate a plurality of decoded training video frames; generating a plurality of energy measure values corresponding to the decoded training video frames; and selecting an energy measure threshold value for each of the quantization levels in accordance with the decoded training video frames.

BRIEF DESCRIPTION OF THE DRAWINGS

Other objects, features, and advantages of the present invention will become more fully apparent from the following detailed description of the preferred embodiment, the appended claims, and the accompanying drawings in which:

FIG. **1** is a block diagram representing real-time point-to-point audio, video, and data conferencing between two PC systems, according to a preferred embodiment of the present invention;

FIG. **2** is a block diagram of the hardware configuration of the conferencing system of each PC system of FIG. **1**;

FIG. **3** is a block diagram of the hardware configuration of the video board of the conferencing system of FIG. **2**;

FIG. **4** is a block diagram of the hardware configuration of the audio/comm board of the conferencing system of FIG. **2**;

FIG. **5** is a block diagram of the software configuration of the conferencing system of each PC system of FIG. **1**;

FIG. **6** is a block diagram of a preferred embodiment of the hardware configuration of the audio/comm board of FIG. **4**;

HUAWEI EX. 1016 - 526/714

FIG. 7 is a block diagram of the conferencing interface layer between the conferencing applications of FIG. 5, on one side, and the comm, video, and audio managers of FIG. 5, on the other side;

FIG. 8 is a representation of the conferencing call finite state machine (FSM) for a conferencing session between a local conferencing system (i.e., caller) and a remote conferencing system (i.e., callee);

FIG. 9 is a representation of the conferencing stream FSM for each conferencing system participating in a conferencing session;

FIG. 10 is a representation of the video FSM for the local video stream and the remote video stream of a conferencing system during a conferencing session;

FIG. 11 is a block diagram of the software components of the video manager of the conferencing system of FIG. 5;

FIG. 12 is a representation of a sequence of N walking key frames;

FIG. 13 is a representation of the audio FSM for the local audio stream and the remote audio stream of a conferencing system during a conferencing session;

FIG. 14 is a block diagram of the architecture of the audio subsystem of the conferencing system of FIG. 5;

FIG. 15 is a block diagram of the interface between the audio task of FIG. 5 and the audio hardware of audio/comm board of FIG. 2;

FIG. 16 is a block diagram of the interface between the audio task and the comm task of FIG. 5;

FIG. 17 is a block diagram of the comm subsystem of the conferencing system of FIG. 5;

FIG. 18 is a block diagram of the comm subsystem architecture for two conferencing systems of FIG. 5 participating in a conferencing session;

FIG. 19 is a representation of the comm subsystem application FSM for a conferencing session between a local site and a remote site;

FIG. 20 is a representation of the comm subsystem connection FSM for a conferencing session between a local site and a remote site;

FIG. 21 is a representation of the comm subsystem control channel handshake FSM for a conferencing session between a local site and a remote site;

FIG. 22 is a representation of the comm subsystem channel establishment FSM for a conferencing session between a local site and a remote site;

FIG. 23 is a representation of the comm subsystem processing for a typical conferencing session between a caller and a callee;

FIG. 24 is a representation of the structure of a video packet as sent to or received from the comm subsystem of the conferencing system of FIG. 5;

FIG. 25 is a representation of the compressed video bitstream for the conferencing system of FIG. 5;

FIG. 26 is a representation of a compressed audio packet for the conferencing system of FIG. 5;

FIG. 27 is a representation of the reliable transport comm packet structure;

FIG. 28 is a representation of the unreliable transport comm packet structure;

FIG. 29 are diagrams indicating typical connection setup and teardown sequences;

FIGS. 30 and 31 are diagrams of the architecture of the audio/comm board; and

FIG. 32 is a diagram of the audio/comm board environment.

DESCRIPTION OF THE PREFERRED EMBODIMENT(S)

Point-To-Point Conferencing Network

Referring now to FIG. 1, there is shown a block diagram representing real-time point-to-point audio, video, and data conferencing between two PC systems, according to a preferred embodiment of the present invention. Each PC system has a conferencing system **100**, a camera **102**, a microphone **104**, a monitor **106**, and a speaker **108**. The conferencing systems communicate via an integrated services digital network (ISDN) **110**. Each conferencing system **100** receives, digitizes, and compresses the analog video signals generated by camera **102** and the analog audio signals generated by microphone **104**. The compressed digital video and audio signals are transmitted to the other conferencing system via ISDN **110**, where they are decompressed and convened for play on monitor **106** and speaker **108**, respectively. In addition, each conferencing system **100** may generate and transmit data signals to the other conferencing system **100** for play on monitor **106**. In a preferred embodiment, the video and data signals are displayed in different windows on monitor **106**. Each conferencing system **100** may also display the locally generated video signals in a separate window.

Camera **102** may be any suitable camera for generating NSTC or PAL analog video signals. Microphone **104** may be any suitable microphone for generating analog audio signals. Monitor **106** may be any suitable monitor for displaying video and graphics images and is preferably a VGA monitor. Speaker **108** may be any suitable device for playing analog audio signals and is preferably a headset.

Conferencing System Hardware Configuration

Referring now to FIG. 2, there is shown a block diagram of the hardware configuration of each conferencing system **100** of FIG. 1, according to a preferred embodiment of the present invention. Each conferencing system **100** comprises host processor **202**, video board **204**, audio/comm board **206**, and ISA bus **208**.

Referring now to FIG. 3, there is shown a block diagram of the hardware configuration of video board **204** of FIG. 2, according to a preferred embodiment of the present invention. Video board **204** comprises industry standard architecture (ISA) bus interface **310**, video bus **312**, pixel processor **302**, video random access memory (VRAM) device **304**, video capture module **306**, and video analog-to-digital (A/D) converter **308**.

Referring now to FIG. 4, there is shown a block diagram of the hardware configuration of audio/comm board **206** of FIG. 2, according to a preferred embodiment of the present invention. Audio/comm board **206** comprises ISDN interface **402**, memory **404**, digital signal processor (DSP) **406**, and ISA bus interface **408**, audio input/output (I/O) hardware **410**.

Conferencing System Software Configuration

Referring now to FIG. 5, there is shown a block diagram of the software configuration each conferencing system **100** of FIG. 1, according to a preferred embodiment of the present invention. Video microcode **530** resides and runs on pixel processor **302** of video board **204** of FIG. 3. Comm task **540** and audio task **538** reside and run on DSP **406** of audio/comm board **206** of FIG. 4. All of the other software modules depicted in FIG. 5 reside and run on host processor **202** of FIG. 2.

HUAWEI EX. 1016 - 527/714

Video, Audio, and Data Processing

Referring now to FIGS. **3**, **4**, and **5**, audio/video conferencing application **502** running on host processor **202** provides the top-level local control of audio and video conferencing between a local conferencing system (i.e., local site or endpoint) and a remote conferencing system (i.e., remote site or endpoint). Audio/video conferencing application **502** controls local audio and video processing and establishes links with the remote site for transmitting and receiving audio and video over the ISDN. Similarly, data conferencing application **504**, also running on host processor **202**, provides the top-level local control of data conferencing between the local and remote sites. Conferencing applications **502** and **504** communicate with the audio, video, and comm subsystems using conferencing application programming interface (API) **506**, video API **508**, comm API **510**, and audio API **512**. The functions of conferencing applications **502** and **504** and the APIs they use are described in further detail later in this specification.

During conferencing, audio I/O hardware **410** of audio/comm board **206** digitizes analog audio signals received from microphone **104** and stores the resulting uncompressed digital audio to memory **404** via ISA bus interface **408**. Audio task **538**, running on DSP **406**, controls the compression of the uncompressed audio and stores the resulting compressed audio back to memory **404**. Comm task **540**, also running on DSP **406**, then formats the compressed audio format for ISDN transmission and transmits the compressed ISDN-formatted audio to ISDN interface **402** for transmission to the remote site over ISDN **110**.

ISDN interface **402** also receives from ISDN **110** compressed ISDN-formatted audio generated by the remote site and stores the compressed ISDN-formatted audio to memory **404**. Comm task **540** then reconstructs the compressed audio format and stores the compressed audio back to memory **404**. Audio task **538** controls the decompression of the compressed audio and stores the resulting decompressed audio back to memory **404**. ISA bus interface then transmits the decompressed audio to audio I/O hardware **410**, which digital-to-analog (D/A) converts the decompressed audio and transmits the resulting analog audio signals to speaker **108** for play.

Thus, audio capture/compression and decompression/playback are preferably performed entirely within audio/comm board **206** without going through the host processor. As a result, audio is preferably continuously played during a conferencing session regardless of what other applications are running on host processor **202**.

Concurrent with the audio processing, video A/D converter **308** of video board **204** digitizes analog video signals received from camera **102** and transmits the resulting digitized video to video capture module **306**. Video capture module **306** decodes the digitized video into YUV color components and delivers uncompressed digital video bitmaps to VRAM **304** via video bus **312**. Video microcode **530**, running on pixel processor **302**, compresses the uncompressed video bitmaps and stores the resulting compressed video back to VRAM **304**. ISA bus interface **310** then transmits via ISA bus **208** the compressed video to host interface **526** running on host processor **202**.

Host interface **526** passes the compressed video to video manager **516** via video capture driver **522**. Video manager **516** calls audio manager **520** using audio API **512** for synchronization information. Video manager **516** then time-stamps the video for synchronization with the audio. Video manager **516** passes the time-stamped compressed video to communications (comm) manager **518** using comm application programming interface (API) **510**. Comm manager **518** passes the compressed video through digital signal processing (DSP) interface **528** to ISA bus interface **408** of audio/comm board **206**, which stores the compressed video to memory **404**. Comm task **540** then formats the compressed video for ISDN transmission and transmits the ISDN-formatted compressed video to ISDN interface **402** for transmission to the remote site over ISDN **110**.

ISDN interface **402** also receives from ISDN **110** ISDN-formatted compressed video generated by the remote site system and stores the ISDN-formatted compressed video to memory **404**. Comm task **540** reconstructs the compressed video format and stores the resulting compressed video back to memory **404**. ISA bus interface then transmits the compressed video to comm manager **518** via ISA bus **208** and DSP interface **528**. Comm manager **518** passes the compressed video to video manager **516** using comm API **510**. Video manager **516** decompresses the compressed video and transmits the decompressed video to the graphics device interface (GDI) (not shown) of Microsoft® Windows for eventual display in a video window on monitor **106**.

For data conferencing, concurrent with audio and video conferencing, data conferencing application **504** generates and passes data to comm manager **518** using conferencing API **506** and comm API **510**. Comm manager **518** passes the data through board DSP interface **532** to ISA bus interface **408**, which stores the data to memory **404**. Comm task **540** formats the data for ISDN transmission and stores the ISDN-formatted data back to memory **404**. ISDN interface **402** then transmits the ISDN-formatted data to the remote site over ISDN **110**.

ISDN interface **402** also receives from ISDN **110** ISDN-formatted data generated by the remote site and stores the ISDN-formatted data to memory **404**. Comm task **540** reconstructs the data format and stores the resulting data back to memory **404**. ISA bus interface **408** then transmits the data to comm manager **518**, via ISA bus **208** and DSP interface **528**. Comm manager **518** passes the data to data conferencing application **504** using comm API **510** and conferencing API **506**. Data conferencing application **504** processes the data and transmits the processed data to Microsoft® Windows GDI (not shown) for display in a data window on monitor **106**.

Preferred Hardware Configuration for Conferencing System

Referring again to FIG. **2**, host processor **202** may be any suitable general-purpose processor and is preferably an Intel® processor such as an Intel® 486 microprocessor. Host processor **202** preferably has at least 8 megabytes of host memory. Bus **208** may be any suitable digital communications bus and is preferably an Industry Standard Architecture (ISA) PC bus. Referring again to FIG. **3**, video A/D converter **308** of video board **204** may be any standard hardware for digitizing and decoding analog video signals that are preferably NTSC or PAL standard video signals. Video capture module **306** may be any suitable device for capturing digital video color component bitmaps and is preferably an Intel® ActionMedia® II Capture Module. Video capture module **306** preferably captures video as subsampled 4:1:1 YUV bitmaps (i.e., YUV9 or YVU9). Memory **304** may be any suitable computer memory device for storing data during video processing such as a random access memory (RAM) device and is preferably a video RAM (VRAM) device with at least 1 megabyte of data storage capacity. Pixel processor **302** may be any suitable processor for compressing video data and is preferably an Intel® pixel processor such as an Intel® i750® Pixel Processor. Video bus **312** may be any suitable digital communications bus and

HUAWEI EX. 1016 - 528/714

is preferably an Intel® DVI® bus. ISA bus interface **310** may be any suitable interface between ISA bus **208** and video bus **312**, and preferably comprises three Intel® ActionMedia® Gate Arrays and ISA configuration jumpers.

Referring now to FIG. **6**, there is shown a block diagram of a preferred embodiment of the hardware configuration of audio/comm board **206** of FIG. **4**. This preferred embodiment comprises:

- Two 4-wire S-bus RJ-45 ISDN interface connectors, one for output to ISDN **110** and one for input from ISDN **110**. Pan of ISDN interface **402** of FIG. **4**.
- Standard bypass relay allowing incoming calls to be redirected to a down-line ISDN phone (not shown) in case conferencing system power is off or conferencing software is not loaded. Part of ISDN interface **402**.
- Two standard analog isolation and filter circuits for interfacing with ISDN **110**. Part of ISDN interface **402**.
- Two Siemens 8-bit D-channel PEB2085 ISDN interface chips. Part of ISDN interface **402**.
- Texas Instruments (TI) 32-bit 33 MHz 320c31 Digital Signal Processor. Equivalent to DSP **406**.
- Custom ISDN/DSP interface application specified integrated circuit (ASIC) to provide interface between 8-bit Siemens chip set and 32-bit TI DSP. Part of ISDN interface **402**.
- 256 Kw Dynamic RAM (DRAM) memory device. Part of memory **404**.
- 32 Kw Static RAM (SRAM) memory device. Part of memory **404**.
- Custom DSP/ISA interface ASIC to provide interface between 32-bit TI DSP and ISA bus **208**. Part of ISA bus interface **408**.
- Serial EEPROM to provide software jumpers for DSP/ISA interface. Part of ISA bus interface **408**.
- Audio Codec 4215 by Analog Devices, Inc. for sampling audio in format such as ADPCM, DPCM, or PCM format. Pan of audio I/O hardware **410**.
- Analog circuitry to drive audio I/O with internal speaker for playback and audio jacks for input of analog audio from microphone **104** and for output of analog audio to speaker **108**. Part of audio I/O hardware **410**.

Referring now to FIGS. **30** and **31**, there are shown diagrams of the architecture of the audio/comm board. The audio/comm board consists basically of a slave ISA interface, a TMS320C31 DSP core, an ISDN BRI S interface, and a high quality audio interface.

The C31 Interface is a 32-bit non-multiplexed data port to the VC ASIC. It is designed to operate with a 27–33 Mhz C31. The C31 address is decoded for the ASIC to live between 400 000H and 44F FFFH. All accesses to local ASIC registers (including the FIFO's) are 0 wait-state. Accesses to the I/O bus (locations 440 000H through 44F FFFH) have 3 wait states inserted. Some of the registers in the ASIC are 8 and 16 bits wide. In these cases, the data is aligned to the bottom (bit 0 and up) of the C31 data word. The remainder of the bits will be read as a "0". All non-existent or reserved register locations will read as a "0".

The B-channel interfaces provide a 32-bit data path to and from the B1 and B2 ISDN data channels. They are FIFO buffered to reduce interrupt overhead and latency requirements. The Line-side and Phone-side interfaces both support transparent data transfer—used for normal phone-call,1 FAX, modem and H.221 formatted data. Both interfaces also support HDLC formatting of the B data per channel to support V.120 "data data" transfer.

The receive and transmit FIFO's are 2 words deep, a word being 32 bits wide (C31 native data width). Full, half and empty indications for all FIFO's are provided in the B-channel status registers. Note that the polarity of these indications vary between receive and transmit. This is to provide the correct interrupt signaling for interrupt synchronized data transfer.

The transparent mode sends data received in the B-channel transmit FIFO's to the SSI interface of the ISACs. The transmitted data is not formatted in any way other than maintaining byte alignment (i.e., bits 0, 8, 16, 24 of the FIFO data are always transmitted in bit 0 of the B-channel data). The written FIFO data is transmitted byte 0 first, byte 3 last—where byte 0 is bits 0 through 7, and bit 0 is sent first.

Transparent mode received data is also byte aligned to the incoming B-channel data stream and assembled as byte 0, byte 1, byte 2, byte 3. Receive data is written into the receive FIFO after all four types have arrived.

The ISAC I/O Interface provides an 8 bit multiplexed data bus used to access the Siemens PEB2085s (ISAC). The 8 bits of I/O address come from bits **0** through **7** of the C31 address. Reads and writes to this interface add 3 wait-states to the C31 access cycle. Buffered writes are not supported in this version of the ASIC.

Each ISAC is mapped directly into its own 64 byte address space (6 valid bits of address). Accesses to the ISAC are 8 bits wide and are located at bit positions **0** to **7** in the C31 32 bit word. Bits **8** through **23** are returned as "0"s on reads.

The PB2085s provide the D-channel access using this interface.

The Accelerator Module Interface is a high bandwidth serial communication path between the C31 and another processor which will be used to add MIPs to the board. Certain future requirements such as g.728 audio compression will require the extra processing power.

The data transfers are 32 bit words sent serially at about 1.5 Mbits/s. The VC ASIC buffers these transfers with FICOs which are 2 words deep to reduce interrupt overhead and response time requirements. The status register provide flags for FIFO full, half, empty and over/under-run (you should never get an under-run). Any of these can be used as interrupt sources as selected in the Serial Port Mask register.

The following paragraphs describe the ISA interface of the audio/comm board. The ISA interface is the gate array that provides an interface between the multi-function board and the ISA bus. Further, the ASIC will control background tasks between a DSP, SAC, and Analog Phone line interfaces. The technology chosen for the ASIC is the 1 micron CMOS-6 family from NEC.

Referring now to FIG. **32**, there is shown a diagram of the audio/comm board environment. The following is a description of the signal groups.

ISA Bus Signals

AEN	The address enable signal is used to de-gated the CPU and other devices from the bus during DMA cycles. When this signal is active (high) the DMA controller has control of the bus. The ASIC does not

HUAWEI EX. 1016 - 529/714

-continued

	respond to bus cycles when AEN is active.
IOCS16#	The I/O 16-bit chip select is used by 16-bit I/O devices to indicate that it can accommodate a 16-bit transfer. This signal is decoded off of address only.
IOW#	This is an active low signal indicating the an I/O write cycle is being performed.
TOR#	This is an active low signal indicating the an I/O read cycle is being performed.
IRQ3, IRQ4, ERQ5, IRQ9, ERQ10, IRA11, ERQ15	These signals are interrupt requests. An interrupt request is generated when an IRQ is raised from a low to a high. The IRQ must remain high until the interrupt service routine acknowledges the interrupt.
RESET	This signal is used to initialize system logic upon power on.
SBHE#	The system bus high enable signal indicates that data should be driven onto the upper byte of the 16-bit data bus.
SA(9:0)	These are the system address lines used to decode I/O address space used by the board. This scheme is compatible with the ISA bus. These addresses are valid during the entire command cycle.
SD(15:0)	These are the system data bus lines.
DSP Signals	
H1CLK	H1CLK is the DSP primary bus clock. All events in the primary bus are referenced to this clock. The frequency of this clock is half the frequency of the clock driving the DSP. See the TMS320C31 data manual chapter 13.
D(31:0)	These are the DSP 32-bit data bus. Data lines 16, 17, and 18 also interface to the EEPROM. Note that the DSP must be in reset and the data bus tristated before access to the EEPROM. This date bus also supplies the board ID when the read while the DSP is reset (see HAUTOID register).
C31_RST#	This is the DSP active low reset signal.
A23-A0	These DSP address lines are used to decode the address space by the ASIC.
R/W#	This signal indicates whether the current DSP external access is a read (high) or a write (low)
STRB#	This is an active low signal form the DSP indicating that the current cycle is to the primary bus.
RDY#	This signal indicates that the current cycle being performed on the primary bus of the DSP can be completed.
HOLD#	The Hold signal is an active low signal used to request the DSP relinquish control of the primary bus. Once the hold has been acknowledge all address, data and status lines are tristated until Hold is released. This signal will be used to implement the DMA and DRAM Refresh.
HOLDA#	This is the Hold Acknowledge signal which is the active low indication that the DSP has relinquished control of the bus.
INT2#	This C31 interrupt is used by the ASIC for DMA and Command interrupts.
INTE1#	Interrupt the C31 on COM Port events.
INT0#	Analog Phone Interrupts.
Memory Signals	
MEMWR1# and MEMWR2#	These signals are active low write strobes for memory banks 1 and 2.
B1OE#, B20E#	These signals are active low output enables for memory banks 1 and 2.
SR_CS#	This is a active low chip selected for the SRAM that makes up bank2.
CAS#	This the active low column address strobe to the DRAM.
RAS#	This the active low row address strobe to the DRAM.
H1D12, H1D24	These signals are a 12 and 24 nS delay of the H1CLK.
MUX	Mux is the signal that controls the external DRAM address mux. When this signal is low the CAS addresses are selected and when it is high the RAS addresses are selected.
EEPROM Signals	
EESK	This is the EEPROM clock signal. This signal is multiplexed with the DSP data signal 1D16. This signal can only be valid while the DSP is in reset.
EEDI	This is the input data signal to the EEPROM. This signal is multiplexed with the DSP data signal D17. This signal can only be valid while the DSP is in reset.
EEDO	This is the data output of the EEPROM. This signal is multiplexed with the DSP data signal D18. This signal can only be valid while the DSP is in reset.
EECS	This is the chip select signal for the EEPROM. This signal is NOT multiplexed and can only be drive active (HIGH) during DSP reset.
Stereo Audio Codec (SAC)	
SP_DC	This signal controls the SAC mode of operation. When this signal is high the SAC is in data or master mode. When this signal is lw the SAC is in control or slave mode.
SP_SCLK	This is the Soundport clock input signal. This clock will either originate from the Soundport or the ASIC.

HUAWEI EX. 1016 - 530/714

-continued

SP_SDIN	This serial data input from the Soundport. The data here is shifted in on the falling edge of the SP_CLK.
SP_SDOUT	This is the serial data output signal for the Soundport. The data is shifted out on the rising edge of the SP_CLK.
SP_FSYNC	This is the frame synchronization signal for the Soundport. This signal will originate from the ASIC when the Soundport is in slave mode or the Soundport is being programed in control mode. When the Soundport is in master mode the frame sync will originate from the Soundport and will have a frequency equal to the sample rate.
CODEC Signals	
24.576MHZ	This clock signal is used to derive clocks used within the ASIC and the 2.048MHz CODEC clock.
COD_FS1, COD_FS2, DOC_FS3, COD_FS4	These signals are the CODEC frame syncs, each signal correspond to one of the four CODECs.
COD_SDOUT	This signal is the serial data output signal of the CODES.
COD_SDIN	This signal is the serial data input signal to the CODECs.
COD_SCLK	This a 2.048MHz clock used to clock data in and out of the four CODECs. The serial data is clocked out on the rising edge and in on the falling edge.
Analog Phone Signals	
LPSENSL1	Line 1 off hook loop current sense. If this signal is low and BYPSRLY1 is high it indicates the Set I has gone off hook. If the signal is low and the BYPSRLY1 is low it indicates that the board has gone off hook. This signal is not latched and therefore is a Real-time-signal.
LPSENSPH1	Set 1 off hook loop current sense. If this signal is low it indicates the Set 1 has gone off hook. This can only take place when BYPSRLY1 is low. This signal is not latched and therefore is a Real-time-signal.
LPSENSL2	Line2 off hook loop current sense. If this signal is low and BYPSRLY2 is high it indicates the Set 1 has gone off hook. If the signal is low and the BYPSRLY2 is low it indicates that the board has gone off hook. This signal is not latched and therefore is a Real-time-signal.
LPSENSPH2	Set 2 off hook loop current sense. If this signal is low it indicates the Set 1 has gone off hook. This can only take place when BYPSRLY2 is low. This signals is not latched and therefore is a Real-time-signal.
RINIGDETL1	Line 1 Ring Detect. If this input signal is low the Line is ringing.
RINGDETL2	Line 2 Ring Detect. If this input signal is low the Line is ringing.
CALLDETL2	Call Detect for Line 1. This signal is cleared low by software to detect 1200 baud FSK data between the first and second rings.
CALLDETL2	Call Detect for Line 2. This signal is cleared low by software to detect 1200 baud FSK data between the first and second rings.
PDOHL1	Pulse Dial Off hook for Line 1. This signal is pulsed to dial phone numbers on pulse dial systems. It is also used to take the line off hook when low.
PDOHL2	Pulse Dial Off hook for Line 2. This signal is pulsed to dial phone numbers on pulse dial systems. It is also used to take the line off hook when low.
BYPSRLY1 and 2	This is an active low output signal controlling the Bypass Relay output. When high the board is by-passed and the Line (1 or 2) is connected the desk Set (1 or 2).
Miscellaneous Signals	
6.144MHZ	This a 6.144 MHz clock signal used to drive the module that can attached to the board. The module will then use this signal to synthesize any frequency it requires.
TEST1, TEST2, TEST3, TEST4	These are four test pins used by the ASIC designers two decrease ASIC manufacturing test vectors. The TEST2 pin is the output of the nand-tree used by ATE.
VDD, VSS	

Those skilled in the an will understand that the present invention may comprise configurations of audio/comm board **206** other than the preferred configuration of FIG. **6**.

Software Architecture for Conferencing System

The software architecture of conferencing system **100** shown in FIGS. **2** and **5** has three layers of abstraction. A computer supported collaboration (CSC) infrastructure layer comprises the hardware (i.e., video board **204** and audio/comm board **206**) and host/board driver software (i.e., host interface **526** and DSP interface **528**) to support video, audio, and comm, as well as the encode method for video (running on video board **204**) and encode/decode methods for audio (running on audio/comm board **206**). The capabilities of the CSC infrastructure are provided to the upper layer as a device driver interface (DDI).

A CSC system software layer provides services for instantiating and controlling the video and audio streams, synchronizing the two streams, and establishing and gracefully ending a call and associated communication channels. This functionality is provided in an application programming

HUAWEI EX. 1016 - 531/714

interface (API). This API comprises the extended audio and video interfaces and the communications APIs (i.e., conferencing API **506**, video API **508**, video manager **516**, video capture driver **522**, comm API **510**, comm manager **518**, Wave API **514**, Wave driver **524**, audio API **512**, and audio manager **520**).

A CSC applications layer brings CSC to the desktop. The CSC applications may include video annotation to video mail, video answering machine, audio/video/data conferencing (i.e., audio/video conferencing application **502** and data conferencing application **504**), and group decision support systems.

Audio/video conferencing application **502** and data conferencing application **504** rely on conferencing API **506**, which in turn relies upon video API **508**, comm API **510**, and audio API **512** to interface with video manager **516**, comm manager **518**, and audio manager **520**, respectively. Comm API **510** and comm manager **518** provide a transport-independent interface (TII) that provides communications services to conferencing applications **502** and **504**. The communications software of conferencing system **100** supports different transport mechanisms, such as ISDN (e.g., V.120 interface), SW56 (e.g., BATP's Telephone API), and LAN (e.g., SPX/IPX, TCP/IP, or NetBIOS). The TII isolates the conferencing applications from the underlying transport layer (i.e., transport-medium-specific DSP interface **528**). The TII hides the network/connectivity specific operations. In conferencing system **100**, the TII hides the ISDN layer. The DSP interface **528** is hidden in the datalink module (DLM). The TII provides services to the conferencing applications for opening communication channels (within the same session) and dynamically managing the bandwidth. The bandwidth is managed through the transmission priority scheme.

In a preferred embodiment in which conferencing system **100** performs software video decoding, AVI capture driver **522** is implemented on top of host interface **526** (the video driver). In an alternative preferred embodiment in which conferencing system **100** performs hardware video decoding, an AVI display driver is also implemented on top of host interface **526**.

The software architecture of conferencing system **100** comprises three major subsystems: video, audio, and communication. The audio and video subsystems are decoupled and treated as "data types" (similar to text or graphics) with conventional operations like open, save, edit, and display. The video and audio services are available to the applications through video-management and audio-management extended interfaces, respectively.

Audio/Video Conferencing Application

Audio/video conferencing application **502** implements the conferencing user interface. Conferencing application **502** is implemented as a Microsoft® Windows 3.1 application. One child window will display the local video image and a second child window will display the remote video image. Audio/video conferencing application **502** provides the following services to conferencing system **100**:

Manage main message loop.

Perform initialization and registers classes.

Handle menus.

Process toolbar messages.

Handles preferences.

Handles speed dial setup and selections.

Connect and hang up.

Handles handset window

Handle remote video.

Handle remote video window.

Handle local video.

Handle local video window.

Data Conferencing Application

Data conferencing application **504** implements the data conferencing user interface. Data conferencing application is implemented as a Microsoft® Windows 3.1 application. The data conferencing application uses a "shared notebook" metaphor. The shared notebook lets the user copy a file from the computer into the notebook and review it with a remote user during a call. When the user is sharing the notebook (this time is called a "meeting"), the users see the same information on their computers, users can review it together, and make notes directly into the notebook. A copy of the original file is placed in the notebook, so the original remains unchanged. The notes users make during the meeting are saved with the copy in a meeting file. The shared notebook looks like a notebook or stack of paper. Conference participants have access to the same pages. Either participant can create a new page and fill it with information or make notes on an existing page.

Conferencing API

Conferencing API **506** of FIG. **5** facilitates the easy implementation of conferencing applications **502** and **504**. Conferencing API **506** of FIG. **5** provides a generic conferencing interface between conferencing applications **502** and **504** and the video, comm, and audio subsystems. Conferencing API **506** provides a high-level abstraction of the services that individual subsystems (i.e., video, audio, and comm) support. The major services include:

Making, accepting, and hanging-up calls.

Establishing and terminating multiple communication channels for individual subsystems.

Instantiating and controlling local video and audio.

Sending video and audio to a remote site through the network.

Receiving, displaying, and controlling the remote video and audio streams.

Conferencing applications **502** and **504** can access these services through the high-level conferencing API **506** without worrying about the complexities of low-level interfaces supported in the individual subsystems.

In addition, conferencing API **506** facilitates the integration of individual software components. It minimizes the interactions between conferencing applications **502** and **504** and the video, audio, and comm subsystems. This allows the individual software components to be developed and tested independent of each other. Conferencing API **506** serves as an integration point that glues different software components together. Conferencing API **506** facilitates the portability of audio/video conferencing application **502**.

Conferencing API **506** is implemented as a Microsoft Windows Dynamic Link Library (DLL). Conferencing API **506** translates the function calls from conferencing application **502** to the more complicated calls to the individual subsystems (i.e., video, audio, and comm). The subsystem call layers (i.e., video API **508**, comm API **510**, and audio API **512**) are also implemented in DLLs. As a result, the programming of conferencing API **506** is simplified in that conferencing API **506** does not need to implement more complicated schemes, such as dynamic data exchange (DDE), to interface with other application threads that implement the services for individual subsystems. For example, the video subsystem will use window threads to transmit/receive streams of video to/from the network.

Conferencing API **506** is the central control point for supporting communication channel management (i.e., estab-

HUAWEI EX. 1016 - 532/714

lishing, terminating channels) for video and audio subsystems. Audio/video conferencing application **502** is responsible for supporting communication channel management for the data conferencing streams.

Referring now to FIG. **7**, there is shown a block diagram of the conferencing interface layer **700** between conferencing applications **502** and **504** of FIG. **5**, on one side, and comm manager **518**, video manager **516**, and audio manager **520**, on the other side, according to a preferred embodiment of the present invention. Conferencing API **506** of FIG. **5** comprises conferencing primitive validator **704**, conferencing primitive dispatcher **708**, conferencing callback **706**, and conferencing finite state machine (FSM) **702** of conferencing interface layer **700** of FIG. **7**. Comm API **510** of FIG. **5** comprises comm primitive **712** and comm callback **710** of FIG. **7**. Video API **508** of FIG. **5** comprises video primitive **716** of FIG. **7**. Audio API **512** of FIG. **5** comprises audio primitive **720** of FIG. **7**.

Conferencing primitive validator **704** validates the syntax (e.g., checks the conferencing call state, channel state, and the stream state with the conferencing finite state machine (FSM) **702** table and verifies the correctness of individual parameters) of each API call. If an error is detected, primitive validator **704** terminates the call and returns the error to the application immediately. Otherwise, primitive validator **704** calls conferencing primitive dispatcher **708**, which determines which subsystem primitives to invoke next.

Conferencing primitive dispatcher **708** dispatches and executes the next conferencing API primitive to start or continue to carry out the service requested by the application. Primitive dispatcher **708** may be invoked either directly from primitive validator **704** (i.e., to start the first of a set of conferencing API primitives) or from conferencing callback **706** to continue the unfinished processing (for asynchronous API calls). Primitive dispatcher **708** chooses the conferencing API primitives based on the information of the current state, the type of message/event, and the next primitive being scheduled by the previous conferencing API primitive.

After collecting and analyzing the completion status from each subsystem, primitive dispatcher **708** either (1) returns the concluded message back to the conferencing application by returning a message or invoking the application-provided callback routine or (2) continues to invoke another primitive to continue the unfinished processing.

There are a set of primitives (i.e., comm primitives **712**, video primitives **716**, and audio primitives **720**) implemented for each API call. Some primitives are designed to be invoked from a callback routine to carry out the asynchronous services.

The subsystem callback routine (i.e., comm callback **710**) returns the completion status of an asynchronous call to the comm subsystem to conferencing callback **706**, which will conduct analysis to determine the proper action to take next. The comm callback **710** is implemented as a separate thread of execution (vthread.exe) that receives the callback Microsoft® Windows messages from the comm manager and then calls VCI DLL to handle these messages.

Conferencing callback **706** returns the completion status of an asynchronous call to the application. Conferencing callback **706** checks the current message/event type, analyzes the type against the current conferencing API state and the next primitive being scheduled to determine the actions to take (e.g., invoke another primitive or return the message to the application). If the processing is not complete yet, conferencing callback **706** selects another primitive to continue the rest of the processing. Otherwise, conferencing callback **706** returns the completion status to the application.

The conferencing callback **706** is used only for comm related conferencing API functions; all other conferencing API functions are synchronous.

The major services supported by conferencing API **506** are categorized as follows:

- Call and Channel Services (establish/terminate a conference call and channels over the call).
- Stream Services (capture, play, record, link, and control the multimedia audio and video streams).
- Data Services (access and manipulate data from the multimedia streams).

Interfacing with the Comm Subsystem

Conferencing API **506** supports the following comm services with the comm subsystem:

- Call establishment—place a call to start a conference.
- Channel establishment—establish four comm channels for incoming video, incoming audio, outgoing video, and outgoing audio. These 4 channels are opened implicitly as part of call establishment, and not through separate APIs. The channel APIs are for other channels (e.g., data conferencing).
- Call termination—hang up a call and close all active channels.

Call Establishment

Establishment of a call between the user of conferencing system A of FIG. **1** and the user of conferencing system B of FIG. **1** is implemented as follows:

- Conferencing APIs A and B call BeginSession to initialize their comm subsystems.
- Conferencing API A calls MakeConnection to dial conferencing API B's number.
- Conferencing API B receives a CONN_REQUESTED callback.
- Conferencing API B sends the call notification to the graphic user interface (GUI); and if user B accepts the call via the GUI, conferencing API B proceeds with the following steps.
- Conferencing API B calls AcceptConnection to accept the incoming call from conferencing API A.
- Conferencing APIs A and B receives CONN_ACCEPTED message.
- Conferencing APIs A and B call RegisterChanMgr for channel management.
- Conferencing API A calls OpenChannel to open the audio channel.
- Conferencing API B receives the Chan_Requested callback and accepts it via AcceptChannel.
- Conferencing API A receives the Chan_Accepted callback.
- The last three steps are repeated for the video channel and the control channel.
- Conferencing API A then sends the business card information on the control channel, which conferencing API B receives.
- Conferencing API B then turns around and repeats the above 6 steps (i.e., opens its outbound channels for audio/video/control and sends its business card information on its control channel).
- Conferencing APIs A and B then notify the conferencing applications with a CFM_ACCEPT_NTFY callback.

Channel Establishment

Video and audio channel establishment is implicitly done as part of call establishment, as described above, and need

HUAWEI EX. 1016 - 533/714

not be repeated here. For establishing other channels such as data conferencing, the conferencing API passes through the request to the comm manager, and sends the comm manager's callback to the user's channel manager.

Call Termination

Termination of a call between users A and B is implemented as follows (assuming user A hangs up):

- Conferencing API A unlinks local/remote video/audio streams from the network.
- Conferencing API A then calls the comm manager's CloseConnection.
- The comm manager implicitly closes all channels, and sends Chan_Closed callbacks to conferencing API A.
- Conferencing API A closes its remote audio/video streams on receipt of the Chan_Closed callback for its inbound audio/video channels, respectively.
- Conferencing API A then receives the CONN_CLOSE_RESP from the comm manager after the call is cleaned up completely. Conferencing API A notifies its application via a CFM_HANGUP_NTFY.
- In the meantime, the comm manager on B would have received the hangup notification, and would have closed its end of all the channels, and notified conferencing API B via Chan_Closed.
- Conferencing API B closes its remote audio/video streams on receipt of the Chan_Closed callback for its inbound audio/video channels, respectively.
- Conferencing API B unlinks its local audio/video streams from the network on receipt of the Chan_Closed callback for its outbound audio/video channels, respectively.
- Conferencing API B then receives a CONN_CLOSED notification from its comm manager. Conferencing API B notifies its application via CFM_HANGUP_NTFY.

Interfacing with the Audio and Video Subsystems

Conferencing API **506** supports the following services with the audio and video subsystems:

- Capture/monitor/transmit local video streams.
- Capture/transmit local audio streams.
- Receive/play remote streams.
- Control local/remote streams.
- Snap an image from local video stream.

Since the video and audio streams are closely synchronized, the audio and video subsystem services are described together.

Capture/Monitor/Transmit Local Streams

The local video and audio streams are captured and monitored as follows:

- Call AOpen to open the local audio stream.
- Call VOpen to open the local video stream.
- Call ACapture to capture the local audio stream from the local hardware.
- Call VCapture to capture the local video stream from the local hardware.
- Call VMonitor to monitor the local video stream.

The local video and audio streams are begun to be sent out to the remote site as follows:

- Call ALinkOut to connect the local audio stream to an output network channel.
- Call VLinkOut to connect the local video stream to an output network channel.

The monitoring of the local video stream locally is stopped as follows:

- Call VMonitor(off) to stop monitoring the local video stream.

Receive/Play Remote Streams

Remote streams are received from the network and played as follows:

- Call AOpen to open the local audio stream.
- Call VOpen to open the local video stream.
- Call ALinkIn to connect the local audio stream to an input network channel.
- Call VLinkIn to connect the local video stream to an input network channel.
- Call APlay to play the received remote audio stream.
- Call VPlay to play the received remote video stream.

Control Local/Remote Streams

The local video and audio streams are paused as follows:

- Call VLinkout(off) to stop sending local video on the network.
- Call AMute to stop sending local audio on the network.

The remote video and audio streams are paused as follows:

- If CF_PlayStream(off) is called, conferencing API calls APlay(off) and VPlay(off).

The local/remote video/audio streams are controlled as follows:

- Call ACntl to control the gains of a local audio stream or the volume of the remote audio stream.
- Call VCntl to control such parameters as the brightness, tint, contrast, color of a local or remote video stream.

Snap an Image from Local Video Streams

A snapshot of the local video stream is taken and returned as an image to the application as follows:

- Call VGrabframe to grab the most current image from the local video stream.

Conferencing API **506** supports the following function calls by conferencing applications **502** and **504** to the video, comm, and audio subsystems:

CF_Init	Reads in the conferencing configuration parameters (e.g., pathname of the directory database and directory name in which the conferencing software is kept) from an initialization file; loads and initializes the software of the comm, video, and audio subsystems by allocating and building internal data structures; allows the application to choose between the message and the callback routines to return the event notifications from the remote site.
CF_MakeCall	Makes a call to the remote site to establish a connection for conferencing. The call is performed asynchronously.
CF_AcceptCall	Accepts a call initiated from the remote site based on the information received in the CFM_CALL_NTFY message.
CF_RejectCall	Rejects incoming call, if appropriate, upon receiving a CFM_CALL_NTFY message.

HUAWEI EX. 1016 - 534/714

-continued

CF_HangupCall	Hangs up a call that was previously established; releases all resources, including all types of streams and data structures, allocated during the call.
CF_GetCallState	Returns the current state of the specified call.
CF_CapMon	Starts the capture of analog video signals from the local camera and displays the video in the local_video_window which is pre-opened by the application. This function allows the user to preview his/her appearance before sending the signals out to the remote site.
CF_PlayRcvd	Starts the reception and display of remote video signals in the remote_video_window, which is pre-opened by the application; starts the reception and play of remote audio signals through the local speaker.
CF_Destroy	Destroys the specified stream group that was created by CF_CapMon or CF_PlayRcvd. As part of the destroy process, all operations (e.g., sending/playing) being performed on the stream group will be stopped and all allocated system resources will be freed.
CF_Mute	Uses AMute to turn on/off the mute function being performed on the audio stream of a specified stream group. This function will temporarily stop or restart the related operations, including playing and sending, being performed on this stream group. This function may be used to hold temporarily one audio stream and provide more bandwidth for other streams to use.
CF_SnapStream	Takes a snapshot of the video stream of the specified stream group and returns a still image (reference) frame to the application buffers indicated by the hbuffer handle.
CF_Control	Controls the capture or playback functions of the local or remote video and audio stream groups.
CF_SendStream	Uses ALinkOut to pause/unpause audio.
CF_GetStreamInfo	Returns the current state and the audio video control block (AVCB) data structure, preallocated by the application, of the specified stream groups.
CF_PlayStream	Stops/starts the playback of the remote audio/video streams by calling APlay/VPlay.

These functions are defined in further detail later in this specification in a section entitled "Data Structures, Functions, and Messages."

In addition, conferencing API **506** supports the following messages returned to conferencing applications **502** and **504** from the video, comm, and audio subsystems in response to some of the above-listed functions:

CFM_CALL_NTFY	Indicates that a call request initiated from the remote site has been received.
CFM_PROGRESS_NTFY	Indicates that a call state/progress notification has been received from the local phone system support.
CFM_ACCEPT_NTFY	Indicates that the remote site has accepted the call request issued locally. Also sent to the accepting application when CF_AcceptCall completes.
CFM_REJECT_NTFY	Indicates that the remote site has rejected or the local site has failed to make the call.
CFM_HANGUP_NTFY	Indicates that the remote site has hung up the call.

Referring now to FIG. **8**, there is shown a representation of the conferencing call finite state machine (FSM) for a conferencing session between a local conferencing system (i.e., caller) and a remote conferencing system (i.e., callee), according to a preferred embodiment of the present invention. The possible conferencing call states are as follows:

CCST_NULL	Null State - state of uninitialized caller/callee.
CCST_IDLE	Idle State - state of caller/callee ready to make/receive calls.
CCST_CALLING	Calling state - state of caller trying to call callee.
CCST_CALLED	Called state - state of callee being called by caller.
CCST_CONNECTED	Call state - state of caller and callee during conferencing session.
CCST_CLOSING	A hangup or call cleanup is in progress.

At the CCST_CONNECTED state, the local application may begin capturing, monitoring, and/or sending the local audio/video signals to the remote application. At the same time, the local application may be receiving and playing the remote audio/video signals.

Referring now to FIG. **9**, there is shown a representation of the conferencing stream FSM for each conferencing system participating in a conferencing session, according to a preferred embodiment of the present invention. The possible conferencing stream states are as follows:

CSST_INIT	Initialization state - state of local and remote streams after CCST_CONNECTED state is first reached.
CSST_ACTIVE	Capture state - state of local stream being captured. Receive state - state of remote stream being received.
CSST_FAILURE	Fail state - state of local/remote stream after resource failure.

Conferencing stream FSM represents the states of both the local and remote streams of each conferencing system. Note that the local stream for one conferencing system is the remote stream for the other conferencing system.

In a typical conferencing session between a caller and a callee, both the caller and callee begin in the CCST_NULL call state of FIG. **8**. The conferencing session is initiated by both the caller and callee calling the function CF_Init to initialize their own conferencing systems. Initialization involves initializing internal data structures, initializing communication and configuration information, opening a local directory data base, verifying the local user's identity,

HUAWEI EX. 1016 - 535/714

and retrieving the user's profile information from the database. The CF_Init function takes both the caller and callee from the CCST_NULL call state to the CCST_IDLE call state. The CF_Init function also places both the local and remote streams of both the caller and callee in the CSST_INIT stream state of FIG. **9**.

Both the caller and callee call the CF_CapMon function to start capturing local video and audio signals and playing them locally, taking both the caller and callee local stream from the CSST_INIT stream state to the CSST_ACTIVE stream state. Both the caller and callee may then call the CF_Control function to control the local video and audio signals, leaving all states unchanged.

The caller then calls the CF_MakeCall function to initiate a call to the callee, taking the caller from the CCST_IDLE call state to the CCST_CALLING call state. The callee receives and processes a CFM_CALL_NTFY message indicating that a call has been placed from the caller, taking the callee from the CCST_IDLE call state to the CCST_CALLED call state. The callee calls the CF_AcceptCall function to accept the call from the caller, taking the callee from the CCST_CALLED call state to the CCST_CONNECTED call state. The caller receives and processes a CFM_ACCEPT_NTFY message indicating that the callee accepted the call, taking the caller from the CCST_CALLING call state to the CCST_CONNECTED call state.

Both the caller and callee then call the CF_PlayRcvd function to begin reception and play of the video and audio streams from the remote site, leaving all states unchanged. Both the caller and callee call the CF_SendStream function to start sending the locally captured video and audio streams to the remote site, leaving all states unchanged. If necessary, both the caller and callee may then call the CF_Control function to control the remote video and audio streams, again leaving all states unchanged. The conferencing session then proceeds with no changes to the call and stream states. During the conferencing session, the application may call CF_Mute, CF_PlayStream, or CF_SendStream. These affect the state of the streams in the audio/video managers, but not the state of the stream group.

When the conferencing session is to be terminated, the caller calls the CF_HangupCall function to end the conferencing session, taking the caller from the CCST_CONNECTED call state to the CCST_IDLE call state. The callee receives and processes a CFM_HANGUP_NTFY message from the caller indicating that the caller has hung up, taking the callee from the CCST_CONNECTED call state to the CCST_IDLE call state.

Both the caller and callee call the CF_Destroy function to stop playing the remote video and audio signals, taking both the caller and callee remote streams from the CSST_ACTIVE stream state to the CSST_INIT stream state. Both the caller and callee also call the CF_Destroy function to stop capturing the local video and audio signals, taking both the caller and callee local streams from the CSST_ACTIVE stream state to the CSST_INIT stream state.

This described scenario is just one possible scenario. Those skilled in the an will understand that other scenarios may be constructed using the following additional functions and state transitions:

If the callee does not answer within a specified time period, the caller automatically calls the CF_HangupCall function to hang up, taking the caller from the CCST_CALLING call state to the CCST_IDLE call state.

The callee calls the CF_RejectCall function to reject a call from the caller, taking the callee from the CCST_CALLED call state to the CCST_IDLE call state. The caller then receives and processes a CFM_REJECT_{13} NTFY message indicating that the callee has rejected the caller's call, taking the caller from the CCST_CALLING call state to the CCST_IDLE call state.

The callee (rather than the caller) calls the CF_HangupCall function to hang up, taking the callee from the CCST_CONNECTED call state to the CCST_IDLE call state. The caller receives a CFM_HANGUP_NTFY message from the callee indicating that the callee has hung up, taking the caller from the CCST_CONNECTED call state to the CCST_IDLE call state.

The CF_GetCallState function may be called by either the caller or the callee from any call state to determine the current call state without changing the call state.

During a conferencing session, an unrecoverable resource failure may occur in the local stream of either the caller or the callee causing the local stream to be lost, taking the local stream from the CSST_ACTIVE stream state to the CSST_FAILURE stream state. Similarly, an unrecoverable resource failure may occur in the remote stream of either the caller or the callee causing the remote stream to be lost, taking the remote stream from the CSST_ACTIVE stream state to the CSST_FAILURE stream state. In either case, the local site calls the CF_Destroy function to recover from the failure, taking the failed stream from the CSST_FAILURE stream state to the CSST_INIT stream state.

The CF_GetStreamInfo function may be called by the application from any stream state of either the local stream or the remote stream to determine information regarding the specified stream groups. The CF_SnapStream and CF_RecordStream functions may be called by the application for the local stream in the CSST_ACTIVE stream state or for the remote stream (CF_RecordStream only) in the CSST_ACTIVE stream state. All of the functions described in this paragraph leave the stream state unchanged.

Video Subsystem

The video subsystem of conferencing system **100** of FIG. **5** comprises video API **508**, video manager **516**, video capture driver **522**, and host interface **526** running on host processor **202** of FIG. **2** and video microcode **530** running on video board **204**. The following sections describe each of these constituents of the video subsystem.

Video API

Video API **508** of FIG. **5** provides an interface between audio/video conferencing application **502** and the video subsystem. Video API **508** provides the following services:

Capture Service	Captures a single video stream continuously from a local video hardware source, for example, a video camera or VCR, and directs the video stream to a video software output sink (i.e., a network destination).
Monitor Service	Monitors the video stream being captured from the local video hardware in the local video window previously opened by the application. Note: This function intercepts and displays a video stream at the

HUAWEI EX. 1016 - 536/714

-continued

	hardware board when the stream is first captured. This operation is similar to a "Short circuit" or a UNIX tee and is different from the "play" function. The play function gets and displays the video stream at the host. In conferencing system 100, the distinction between monitor and play services is that one is on the board and the other at the host. Both are carried out on the host (i.e., software playback). Rather, the distinction is this: monitor service intercepts and displays, on the local system, a video stream that has been captured with the local hardware (generated locally). By contrast, play service operates on a video stream that has been captured on a remote system's hardware and then sent to the local system (generated remotely).
Pause Service	Suspends capturing or playing of an active video stream; resumes capturing or playing of a previously suspended video stream.
Image Capture	Grabs the most current complete still Unage (called a reference frame) from the specified video stream and returns it to the application in the Microsoft ® DIB (Device-Independent Bitmap) format.
Play Service	Plays a video stream continuously by consuming the video frames from a video software source (i.e., a network source).
Link-In Service	Links a video network source to be the input of a video stream played locally. This service allows applications to change dynamically the software input source of a video stream.
Link-Out Service	Links a network source to be the output of a video stream captured locally. This service allows applications to change dynamically the software output source of a video stream.
Control Service	Controls the video stream "on the fly," including adjusting brightness, contrast, frame rate, and data rate.
Information Service	Returns status and information about a specified video stream.
Initialization/Configuration	Initializes the video subsystem and calculates the cost, in terms of system resources, required to sustain certain video configurations. These costs can be used by other subsystems to determine the optimum product configuration for the given system.

Video API **508** supports the following function calls by audio/video conferencing application **502** to the video subsystem:

VOpen	Opens a video stream with specified attributes by allocating all necessary system resources (e.g., internal data structures) for it.
VCapture	Starts/stops capturing a video stream from a local video hardware source, such as a video camera or VCR.
VMonitor	Starts/stops monitoring a video stream captured from local a video camera or VCR.
VPlay	Starts/stops playing a video stream from a network, or remote, video source. When starting to play, the video frames are consumed from a network video source and displayed in a window pre-opened by the application.
VLinkIn	Links/unlinks a network . . . to/from a specified video stream, which will be played/is being played locally.
VLinkOut	Links/unlinks a network . . . to/from a specified video stream, which will be captured/is being captured from the local camera or VCR.
VGrabframe	Grabs the most current still image (reference frame) from a specified video stream and returns the frame in an application-provided buffer.
VPause	Starts/stops pausing a video stream captured/played locally.
VCntl	Controls a video stream by adjusting its parameters (e.g., tint/contrast, frame/data rate).
VGetInfo	Returns the status (VINFO and state) of a video stream.
VClose	Closes a video stream and releases all system resources allocated for this stream.
VInit	Initializes the video subsystem, starts capture and playback applications, and calculates system utilization for video configurations.
VShutdown	Shuts down the video subsystem and stops the capture and playback applications.
VCost	Calculates and reports the percentage CPU utilization required to support a given video stream.

These functions are defined in further detail later in this specification in a section entitled "Data Structures, Functions, and Messages."

Referring now to FIG. **10**, there is shown a representation of the video FSM for the local video stream and the remote video stream of a conferencing system during a conferencing session, according to a preferred embodiment of the present invention. The possible video states are as follows:

VST_INIT	Initial state - state of local and remote video streams after the application calls the CF_Init function.
VST_OPEN	Open state - state of the local/remote video stream after system resources have been allocated.
VST_CAPTURE	Capture state - state of local video stream being captured.
VST_LINKOUT	Link-out state - state of local video stream being linked to video output (e.g., network output channel or output file).
VST_LINKIN	Link-in state - state of remote video stream being linked to video input (e.g., network input channel or input file).
VST_PLAY	Play state - state of remote video stream being played.
VST_ERROR	Error state - state of local/remote video stream after a system resource failure occurs.

In a typical conferencing session between a caller and a callee, both the local and remote video streams begin in the VST_INIT video state of FIG. **10**. The application calls the VOpen function to open the local video stream, taking the local video stream from the VST_INIT video state to the VST_OPEN video state. The application then calls the VCapture function to begin capturing the local video stream, taking the local video stream from the VST_OPEN video state to the VST_CAPTURE video state. The application then calls the VLinkOut function to link the local video stream to the video output channel, taking the local video stream from the VST_CAPTURE video state to the VST_LINKOUT video state.

HUAWEI EX. 1016 - 537/714

The application calls the VOpen function to open the remote video stream, taking the remote video stream from the VST_INIT video state to the VST_OPEN video state. The application then calls the VLinkIn function to link the remote video stream to the video input channel, taking the remote video stream from the VST_OPEN video state to the VST_LINKIN video state. The application then calls the VPlay function to begin playing the remote video stream, taking the remote video stream from the VST_LINKIN video state to the VST_PLAY video state. The conferencing session proceeds without changing the video states of either the local or remote video stream.

When the conferencing session is to be terminated, the application calls the VClose function to close the remote video channel, taking the remote video stream from the VST_PLAY video state to the VST_INIT video state. The application also calls the VClose function to close the local video channel, taking the local video stream from the VST_LINKOUT video state to the VST_INIT video state.

This described scenario is just one possible video scenario. Those skilled in the art will understand that other scenarios may be constructed using the following additional functions and state transitions:

- The application calls the VLinkOut function to unlink the local video stream from the video output channel, taking the local video stream from the VST_LINKOUT video state to the VST_CAPTURE video state.
- The application calls the VCapture function to stop capturing the local video stream, taking the local video stream from the VST_CAPTURE video state to the VST_OPEN video state.
- The application calls the VClose function to close the local video stream, taking the local video stream from the VST_OPEN video state to the VST_INIT video state.
- The application calls the VClose function to close the local video stream, taking the local video stream from the VST_CAPTURE video state to the VST_INIT video state.
- The application calls the VClose function to recover from a system resource failure, taking the local video stream from the VST_ERROR video state to the VST_INIT video state.
- The application calls the VPlay function to stop playing the remote video stream, taking the remote video stream from the VST_PLAY video state to the VST_LINKIN video state.
- The application calls the VLinkIn function to unlink the remote video stream from the video input channel, taking the remote video stream from the VST_LINKIN video state to the VST_OPEN video state.
- The application calls the VClose function to close the remote video stream, taking the remote video stream from the VST_OPEN video state to the VST_INIT video state.
- The application calls the VClose function to close the remote video stream, taking the remote video stream from the VST_LINKIN video state to the VST_INIT video state.
- The application calls the VClose function to recover from a system resource failure, taking the remote video stream from the VST_ERROR video state to the VST_INIT video state.

The VGetInfo and VCntl functions may be called by the application from any video state of either the local or remote video stream, except for the VST_INIT state. The VPause and VGrabFrame functions may be called by the application for the local video stream from either the VST_CAPTURE or VST_LINKOUT video states or for the remote video stream from the VST_PLAY video state. The VMonitor function may be called by the application for the local video stream from either the VST_CAPTURE or VST_LINKOUT video states. All of the functions described in this paragraph leave the video state unchanged.

Video Manager

Referring now to FIG. **11**, there is shown a block diagram of the software components of video manager (VM) **516** of FIG. **5**, according to a preferred embodiment of the present invention. Video manager **516** is implemented using five major components:

Library	(VM DLL 1102) A Microsoft ® Windows Dynamic Link Library (DLL) that provides the library of functions of video API 508.
Capture	(VCapt EXE 1104) A Microsoft ® Windows application (independently executable control thread with stack, message queue, and data) which controls the capture and distribution of video frames from video board 204.
Playback	(VPlay EXE 1106) A Microsoft ® Windows application which controls the playback (i.e., decode and display) of video frames received from either the network or a co-resident capture application.
Network Library	(Netw DLL 1108) A Microsoft ® Windows DLL which provides interfaces to send and receive video frames across a network or in a local loopback path to a co-resident playback application. The Netw DLL hides details of the underlying network support from the capture and playback applications and implements (in a manner hidden from those applications) the local loopback function.
Audio-Video Synchronization Library	(AVSync DLL 1110) A Microsoft ® Windows DLL which provides interfaces to enable the synchronization of video frames with a separate stream of audio frames for the purposes of achieving "lip-synchronization." AVSync DLL 1110 supports the implementation of an audio-video synchronization technique described later in this specification.

The five major components, and their interactions, define how the VM implementation is decomposed for the purposes of an implementation. In addition, five techniques provide full realization of the implementation:

Stream Restart	A technique for initially starting, and restarting, a video stream. If a video stream consists entirely of encoded "delta" frames, then the method of stream start/restart quickly supplies the decoder with a "key" or reference frame. Stream restart is used when a video stream becomes out-of-sync with respect to the audio.
Synchronization	An audio-video synchronization technique for synchronizing a sequence, or stream, of video frames with an external audio source.
Bit Rate Throttling	A technique by which the video stream bit rate is controlled so that video frame data coexists with other video conferencing components. This technique is dynamic in nature and acts to "throttle" the video stream (up and down) in response to higher priority requests (higher than video data priority) made at the network interface.
Multiple Video Formats	A technique by which multiple video formats are used to optimize transfer, decode, and display costs when video frames

HUAWEI EX. 1016 - 538/714

-continued

	are moved between video board 204 and host processor 202. This technique balances video frame data transfer overhead with host processor decode and display overhead in order to implement efficiently a local video monitor.
Self-Calibration	A self-calibration technique which is used to determine the amount of motion video PC system can support. This allows conferencing system 100 to vary video decode and display configurations in order to run on a range of PC systems. It is particularly applicable in software-playback systems.

Capture/Playback Video Effects

This subsection describes an important feature of the VM implementation that has an impact on the implementation of both the capture and playback applications (VCapt EXE **1104** and VPlay EXE **1106**). One of the key goals of VM capture and playback is that while local Microsoft® Windows application activity may impact local video playback, it need not effect remote video playback. That is, due to the non-preemptive nature of the Microsoft® Windows environment, the VPlay application may not get control to run, and as such, local monitor and remote playback will be halted. However, if captured frames are delivered as a part of capture hardware interrupt handling, and network interfaces are accessible at interrupt time, then captured video frames can be transmitted on the network, regardless of local conditions.

With respect to conferencing system **100**, both of these conditions are satisfied. This is an important feature in an end-to-end conferencing situation, where the local endpoint is unaware of remote endpoint processing, and can only explain local playback starvation as a result of local activity. The preferred capture and playback application design ensures that remote video is not lost due to remote endpoint activity.

Video Stream Restart

The preferred video compression method for conferencing system **100** (i.e., ISDN rate video or IRV) contains no key frames (i.e., reference frames). Every frame is a delta (i.e., difference) frame based on the preceding decoded video frame. In order to establish a complete video image, IRV dedicates a small part (preferably 1/85th) of each delta frame to key frame data. The part of an IRV delta frame that is key is complete and does not require inter-frame decode. The position of the key information is relative, and is said to "walk" with respect to a delta frame sequence, so that the use of partial key information may be referred to as the "walking key frame."

Referring now to FIG. **12**, there is shown a representation of a sequence of N walking key frames. For a walking key frame of size 1/N, the kth frame in a sequence of N frames, where (k<=N), has its kth component consisting of key information. On decode, that kth component is complete and accurate. Provided frame k+1 is decoded correctly, the kth component of the video stream will remain accurate, since it is based on a kth key component and a k+1 correct decode. A complete key frame is generated every N frames in order to provide the decoder with up-to-date reference information within N frames.

For a continuous and uninterrupted stream of video frames, the walking key frame provides key information without bit-rate fluctuations that would occur if a complete key frame were sent at regular intervals. However, without a complete key frame, video stamp requires collecting all walking key frame components, which requires a delay of N frames. If video startup/restart occurs often, this can be problematic, especially if N is large. For example, at 10 frames per second (fps) with N=85, the stamp/restart time to build video from scratch is 8.5 seconds.

In order to accelerate IRV stream startup and restart, an IRV capture driver "Request Key Frame" interface is used to generate a complete key frame on demand. The complete key frame "compresses" N frames of walking key frames into a single frame, and allows immediate stream startup once it is received and decoded. Compressed IRV key frames for (160×120) video images are approximately 6–8 KBytes in length. Assuming an ISDN bandwidth of 90 kbits dedicated to video, ISDN key frame transmission takes approximately 0.5–0.6 seconds to transmit. Given a walking key frame size of 1/85 (N=85), and a frame rate of 10 fps, use of a complete key frame to start/restart a video stream can decrease the startup delay from 8.5 secs to approximately ½ sec.

In order for walking key frame compression to be successful, the delta frame rate must be lowered during key frame transmission. Delta frames generated during key frame transmission are likely to be "out-of-sync" with respect to establishing audio-video synchronization, and given the size of a key frame, too many delta frames will exceed the overall ISDN bandwidth. The IRV capture driver bit rate controller takes into account key frame data in its frame generation logic and decreases frame rate immediately following a key frame.

A key frame once received may be "out-of-sync" with respect to the audio stream due to its lengthy transmission time. Thus, key frames will be decoded but not displayed, and the video stream will be "in-sync" only when the first follow-on delta frame is received. In addition, the "way-out-of-sync" window is preferably sized appropriately so that key frame transmission does not cause the stream to require repeated restarts.

Once it is determined that a stream requires restart, either as part of call establishment or due to synchronization problems, the local endpoint requiring the restart transmits a restart control message to the remote capture endpoint requesting a key frame. The remote capture site responds by requesting its capture driver to generate a key frame. The key frame is sent to the local endpoint when generated. The endpoint requesting the restart sets a timer immediately following the restart request. If a key frame is not received after an adequate delay, the restart request is repeated.

Audio/Video Synchronization

Video manager **516** is responsible for synchronizing the video stream with the audio stream in order to achieve "lip-synchronization." Because of the overall conferencing architecture, the audio and video subsystems do not share a common clock. In addition, again because of system design, the audio stream is a more reliable, lower latency stream than the video stream. For these reasons, the video stream is synchronized by relying on information regarding capture and playback audio timing.

For VM audio/video (A/V) synchronization, audio stream packets are timestamped from an external clock at the time they are captured. When an audio packet is played, its timestamp represents the current audio playback time. Every video frame captured is stamped with a timestamp, derived from the audio system, that is the capture timestamp of the last audio packet captured. At the time of video playback (decode and display, typically at the remote endpoint of a video conference), the video frame timestamp is compared with the current audio playback time, as derived from the audio system.

HUAWEI EX. 1016 - 539/714

Two windows, or time periods, δ_1 and δ_2, are defined, with $\delta_1<\delta_2$, as part of VM initialization. Let V_T be the timestamp for a given video frame, and let A_T be the current audio playback time when the video frame is to be played. A/V synchronization is defined as follows:

If $|A_T-V_T|\leq\delta_1$, then the video stream is "in-sync" and played normally (i.e., decoded and displayed immediately).

If $\delta_1<|A_T-V_T|\leq\delta_2$, then the video stream is "out-of-sync" and a "hurry-up" technique is used to attempt re-synchronization. If a video stream remains out-of-sync for too many consecutive frames, then it becomes "way-out-of-sync" and requires a restart.

If $\delta_2<|A_T-V_T|$, then the video stream is "way-out-of-sync" and requires a restart.

Because of the overall design of conferencing system **100**, a video stream sent from one endpoint to another is "behind" its corresponding audio stream. That is, the transmission and reception of a video frame takes longer than the transmission and reception of an audio frame. This is due to the design of video and audio capture and playback sites relative to the network interface, as well as video and audio frame size differences. In order to compensate for this, the audio system allows capture and playback latencies to be set for an audio stream. Audio capture and playback latencies artificially delay the capture and playback of an audio stream.

As part of the VLinkOut function, video manager **516** calls audio manager **520** to set an audio capture latency. As part of the VLinkIn function, video manager **516** calls audio manager **520** to set an audio playback latency. Once the latencies are set, they are preferably not changed. The capture and playback latency values are specified in milliseconds, and defined as part of VM initialization. They may be adjusted as part of the Calibration process.

In order to attempt re-synchronization when a stream is not too far "out-of-sync" as defined by the above rules, an feature called "Hurry-up" is used. When passing a video frame to the codec for decode, if hurry-up is specified, then the codec performs frame decode to a YUV intermediate format but does not execute the YUV-to-RGB color conversion. Though the output is not color converted for RGB graphics display, the hurry-up maintains the playback decode stream for following frames. When Hurry-up is used, the frame is not displayed. By decreasing the decode/display cost per frame and processing frames on demand (the number of frames processed for playback per second can vary), it is possible for a video stream that is out-of-sync to become in-sync.

Bit Rate Throttling

Conferencing system **100** supports a number of different media: audio, video, and data. These media are prioritized in order to share the limited network (e.g., ISDN) bandwidth. A priority order of (highest-to-lowest) audio, data, and video is designated. In this scheme, network bandwidth that is used for video will need to give way to data, when data conferencing is active (audio is not compromised). In order to implement the priority design, a mechanism for dynamically throttling the video bit stream is used. It is a self-throttling system, in that it does not require input from a centralized bit rate controller. It both throttles down and throttles up a video bit stream as a function of available network bandwidth.

A latency is a period of time needed to complete the transfer of a given amount of data at a given bit rate. For example, for 10 kbits at 10 kbits/sec, latency=1. A throttle down latency is the latency at which a bit stream is throttled down (i.e., its rate is lowered), and a throttle up latency is the latency at which a bit stream is throttled up (i.e., its rate is increased).

Multiple Video Formats

Conferencing system **100** presents both a local monitor display and a remote playback display to the user. A digital video resolution of (160×120) is preferably used as capture resolution for ISDN-based video conferencing (i.e., the resolution of a coded compressed video stream to a remote site). (160×120) and (320×24) are preferably used as the local monitor display resolution. (320×240) resolution may also be used for high-resolution still images. Generating the local monitor display by decompressing and color converting the compressed video stream would be computationally expensive. The video capture driver **522** of FIG. **5** simultaneously generates both a compressed video stream and an uncompressed video stream. Video manager **516** makes use of the uncompressed video stream to generate the local monitor display. Video manager **516** may select the format of the uncompressed video stream to be either YUV-9 or 8-bits/pixel (bpp) RGB—Device Independent Bitmap (DIB) format. For a (160×120) local monitor, the uncompressed DIB video stream may be displayed directly. For a (320×240) monitor, a (160×120) YUV-9 format is used and the display driver "doubles" the image size to (320×240) as part of the color conversion process.

In the RGB and YUV-9 capture modes, RGB or YUV data are appended to capture driver IRV buffers, so that the capture application (VCapt EXE 1104) has access to both fully encoded IRV frames and either RGB or YUV data. Conferencing system **100** has custom capture driver interfaces to select either RGB capture mode, YUV capture mode, or neither.

Self-Calibration

CPU, I/O bus, and display adapter characteristics vary widely from computer to computer. The goal of VM self-calibration is to support software-based video playback on a variety of PC platforms, without having to "hard-code" fixed system parameters based on knowledge of the host PC. VM self-calibration measures a PC computer system in order to determine the decode and display overheads that it can support. VM self-calibration also offers a cost function that upper-layer software may use to determine if selected display options, for a given video compression format, are supported.

There are three major elements to the self-calibration:

1. The calibration of software decode using actual video decompress cycles to measure decompression costs. Both RGB/YUV capture mode and IRV frames are decoded in order to provide accurate measurement of local (monitor) and remote video decode. YUV (160×120) and YUV (320×240) formats are also decoded (color converted) to provide costs associated with the YUV preview feature of the video subsystem.
2. A calibration of PC displays, at varying resolutions, using actual video display cycles to measure display costs.
3. A video cost function, available to applications, that takes as input frame rate, display rate, display resolution, video format, and miscellaneous video stream characteristics, and outputs a system utilization percentage representing the total system cost for supporting a video decompress and display having the specified characteristics.

The calibration software detects a CPU upgrade or display driver modification in order to determine if calibration is to be run, prior to an initial run on a newly installed system.

VM DLL

Referring again to FIG. **11**, video manager dynamic link library (VM DLL) WB is a video stream "object manager."

HUAWEI EX. 1016 - 540/714

That is, with few exceptions, all VM DLL interfaces take a "Video Stream Object Handle" (HVSTRM) as input, and the interfaces define a set of operations or functions on a stream object. Multiple stream objects may be created.

Video API **508** defines all of external interfaces to VM DLL WB. There are also a number of VM internal interfaces to VM DLL WB that are used by VCapt EXE WC, VPlay EXE WD, Netw DLL WE, and AVSync DLL WF for the purposes of manipulating a video stream at a lower level than that available to applications. The vm.h file, provided to applications that use VM DLL WF, contains a definition of all EPS and VM internal interfaces. EPS interfaces are prefixed with a 'V'; VM internal interfaces are prefixed with a 'VM'. Finally, there are a number of VM private interfaces, available only to the VM DLL code, used to implement the object functions. For example, there are stream object validation routines. The self-calibration code is a separate module linked with the VM DLL code proper.

Video API calls, following HVSTRM and parameter validation, are typically passed down to either VCapt or VPlay for processing. This is implemented using the Microsoft® Windows SDK SendMessage interface. SendMessage takes as input the window handle of the target application and synchronously calls the main window proc of that application. As part of VM initialization, VM starts execution of the applications, VCapt and VPlay. As part of their WinMain processing, these applicationss make use of a VMRegister interface to return their window handle to VM DLL WB. From registered window handles, VM DLL WB is able to make use of the SendMessage interface. For every video API interface, there is a corresponding parameter block structure used to pass parameters to VCapt or VPlay. These structures are defined in the vm.h file. In addition to the WinExec startup and video API interface calls, VM DLL WB can also send a shutdown message to VCapt and VPlay for termination processing.

Immediately following the successful initialization of VCapt and VPlay, VM **516** calls the interface 'videoMeasure' in order to run self-calibration. The VCost interface is available, at run-time, to return measurement information, per video stream, to applications.

VCapt EXE

The video capture application (VCapt EXE WC) implements all details of video frame capture and distribution to the network, including:

- Control of the ISVR capture driver.
- Video format handling to support IRV and RGB/YUV capture mode.
- Video frame capture callback processing of captured video frames.
- Copy followed by PostMessage transfer of video frames to local playback application (VPlay EXE).
- Transmission, via Netw DLL WE, of video frames to the network.
- Mirror, zoom, camera video attributes, and miscellaneous capture stream control processing.
- Restart requests from a remote endpoint.
- Shutdown processing.

VCapt EXE WC processing may be summarized as a function of the Microsoft® Windows messages as follows:

WINMAIN

- Initialize application.
- Get VCapt EXE initialization (INI) settings.
- Open ISVR driver.
- Register window handle (and status) with VM DLL WB.
- Enter Microsoft® Windows message loop.

WM_VCAPTURE_CALL (ON)

- Register audio callback with audio manager **520**.
- Set audio capture latency with audio manager **520**.
- Initialize the ISVR capture stream based on stream object attributes.

WM_VLINKOUT_CALL (ON)

- Register Netw callback handler for transmission completion handling.
- Initialize bit rate throttling parameters.

WM_MONITOR_DATA_RTN

- Decrement reference count on video frame (user context buffers).

WM_PLAY_DATA_RTN

- Add buffer back to capture driver.

This message is only in loopback case of remote playback—preferably for testing only.

WM_RESTART_STREAM

- Request key frame from capture driver.

WM_VCNTL_CALL

- Adjust video stream controls based on VCntl parameters (from VM DLL WB).

WM_PLAYBACK

- Get stream format type (IRV, YUV).
- Set ISVR RGB/YUV capture mode controls: If IRV (160×120) playback then RGB; if IRV 320×240 playback, then YUV.

This message is from local playback application (VPlay EXE WD) in response to local window (monitor) size changes.

WM_SHUTDOWN

- Disable capture; includes closing the capture driver.
- Un-initializes capture application.
- DestroyWindow.

VCapt Capture Callback is a key component of the VCapt EXE application. VCapt Capture Callback processes individual frames received, in interrupt context, from the capture driver (ISVR.DRV). The main steps of callback processing are:

- Time stamp the video frame using AVSync DLL WF.
- Set the packet sequence number of the frame (for network error detection).
- If the video stream is in the Monitor state, then copy the frame out of interrupt context into a local monitor playback frame first-in first-out (FIFO) device. If the video format is YUV, then only the frame header is copied, since YUV data does not go to the network, and is not "real-time."
- If the video stream is in the LinkOut state of FIG. **10**, then call the NETWSendFrame function to send the frame to the remote playback site, and then add the frame buffer back to the capture driver. Also, use interface DataRateThrottleDown to adjust the video bit rate, as needed.

VPlay EXE

The video playback application (VPlay EXE WD) implements all details of video playback, including:

- Opening an instance of the IRV playback codec for each playback stream: local monitor and remote playback.
- Maintaining display mode attributes for each stream, based on playback window sizes
- Maintain palette "awareness" for each video stream.
- Receive video frames for decompress and display.

HUAWEI EX. 1016 - 541/714

Filter video frames using AVSync DLL WF and playback frame FIFO state.

Restart video stream as necessary.

Decompress video frames via Microsoft® Windows 3.1 SendDriverMessage Codec interface.

Display video frames via Microsoft® GDI or DrawDIB interfaces.

Handle VM DLL messages generated as a result of video API interface calls.

Handle application shutdown.

In order to encapsulate decode and display attributes for a video stream in a "Display Object," references to a Display Object are passed to internal VPlay procedures. The structure of the Display Object is defined in the vplay.h include file.

VPlay EXE WD processing may be summarized as a function of the Microsoft® Windows messages as follows:

WINMAIN

Initialize application.

Get VPlay initialization (INI) settings.

Register window handle (and status) with VM DLL WB.

Enter Microsoft® Windows message loop.

WM_TIMER

Kill the outstanding restart timer.

If the stream associated with the message is still in the restart state, then RestartStream.

Initialize the ISVR capture stream based on stream object attributes.

WM_MONITOR_DATA

Validate stream state (MONITOR) and video frame data.

ProcessPlayFrame.

Set reference count to 0 (copy frame FIFO).

WM_PLAY_DATA

Validate stream state (PLAY) and video frame data.

ProcessPlayFrame.

NETWPostFrame to return frame buffer to the network.

WM_VMONITOR_CALL (ON)

Get video stream attributes and determine internal stream playback values.

Set up codec for stream; set up decompress structures.

RestartStream.

WM_VPLAY_CALL (ON)

Get video stream attributes and determine internal stream playback values.

Set up codec for stream; set up decompress structures.

RestartStream.

WM_VLINKIN_CALL (ON)

AVRegisterMonitor to set AVSync audio manager callback.

AVSetLatency to set audio manager playback latency.

NETWRegisterIn to register receive data complete callbacks from network and post video frame network buffers.

WM_VCNTL_CALL

Adjust video stream controls (via codec) based on VCntl parameters (from VM DLL WB).

WM_VGRABFRAME_CALL

Copy out the current RGB display buffer for the stream.

WM_MEASURE_BEGIN

Turn on video statistics gathering.

WM_MEASURE_END

Return decode and display playback statistics for the stream.

WM_MEASURE_BEGIN

Turn on video statistics gathering.

WM_SHUTDOWN

Clean up codec.

DestroyWindow.

Unregister Class. The 'ProcessPlayFrame' procedure is a key component of the playback application (VPlay EXE WD). It processes individual frames received, in user context, from either the VCapt capture callback, in the case of local monitor playback, or from the Netw receive data complete callback, in the case of remote playback. The main steps of 'ProcessPlayFrame' processing are:

Send the video frame through the 'SyncFilter'.

If the frame is "way-out-of-sync," then restart the stream.

If the frame is "out-of-sync," then 'hurry_up'=TRUE.

Else, 'hurry_up'=FALSE.

Based on the stream display frequency attribute, determine if the frame should be displayed. If the frame is not to be displayed, then 'hurry_up'=TRUE; else 'hurry_up'=FALSE.

If the stream is REMOTE, then decode with IRV decompress.

If the stream is LOCAL, then:

If the stream is IRV (i.e., not RGB/YUV capture mode), then decode with IRV decompress;

Else if the stream is RGB capture mode, then copy to RGB display buffer;

Else if the stream is YUV capture mode, then decode with IRV Color Convert;

Else if the stream is YUV, then decode with IRV Color Convert;

If all frames have been decompressed (no more frames in playback frame FIFO) and 'hurry_up'==FALSE, then Display Frame.

SyncFilter, a procedure used by ProcessPlayFrame, is implemented as follows:

If the playback frame Fifo length is> AVFrameHighWaterMark, then return ("way-out-of-sync").

If the stream is REMOTE, then if there is a Frame Packet Sequence Number Error, then return ("way-out-of-sync").

If the stream is REMOTE, then return (AVFrameSync (StreamObject, FramePtr)).

The first test is important: It states that the number of frames queued for playback has exceeded a high water mark, which indicates that VPlay EXE WD has been starved and the stream playback is "way-out-of-sync." The AVFrameSync interface (AVSync DLL WF) is preferably only used with remote streams, since local streams do not have the concept of an associated audio playback time.

DisplayFrame, a procedure used by ProcessPlayfFrame, is implemented as follows: Based on the stream Display Object mode, use Microsoft® Windows DrawDib, BitBlt, or StretchBlt to display the frame. The display mode is a function of playback window size and video format resolution.

RestartStream is a procedure that handles details of stream restart. Its implementation is:

Clear the playback frame FIFO (the ClearFrameFifo procedure recycles queued video frames to the network or VCapt, as needed).

Set the stream state to 'RESTART".

If the stream is LOCAL, then:

HUAWEI EX. 1016 - 542/714

If YUV/RGB capture mode is not enabled, then PostMessage (WM_STREAM_RESTART, 0, 0) to VCapt EXE WC indicating a key frame request. If YUV/RGB capture mode is enabled, then every captured frame contains a RGB or YUV capture mode key frame, and a key frame request is unnecessary.

Else (stream is REMOTE) NETWSendCntl (WM_RESTART_STREAM) to have the network send a restart control message; Set the Key Frame Request timer.

One of the more important areas of the VPlay implementation is its "Palette Awareness" logic. In order that video displays retain proper colors in a palettized environment, VPlay must respond to a Microsoft® Windows palette change and get new palette messages. To accomplish this, VPlay "hooks" the window specified in the WM_VPLAY_CALL message parameter block, so that palette messages to the "hooked" window will be transmitted to a procedure within VPlay that properly handles the palette management.

Netw DLL

Network library (Netw DLL WE) provides a library of network interfaces designed to hide the capture and playback applications from details of the underlying network service, including:

Management of network buffers.

Asynchronous interrupt-time callbacks when data is received or transmission is complete.

Video frame and control message transmission.

Compaction of video frame headers, from Microsoft® Video for Windows (VfW) defined headers to packed headers suitable for low-bandwidth networks (e.g., ISDN).

Transparent local loopback of video frames (supports single machine testing of video subsystem).

Netw DLL WE defines a 'SUPERVIDEOHDR' structure, which is an extension of the 'VIDEOHDR' structure defined by Microsoft® Video for Windows. The VIDEOHDR structure is used by VfW capture and playback applications on a single PC. The SUPERVIDEOHDR contains the VIDEOHDR structure, plus VM-specific control information, an area where VIDEOHDR data can be compacted for network transmission, and a contiguous frame data buffer. The contiguity of the SUPERVIDEOHDR structure allows the VfW structure to be used without modification by VCapt and VPlay (which are also VfW applications), while at the same time allowing a video frame to be transmitted on the network in a single operation.

The interfaces provided by the Netw DLL are as follows:

NETWCallbackIn—Callback used for VLinkIn streams; processes received data from the network.

NETWCallbackOut—Callback used for VLinkOut streams; processes send completions from the network.

NETWInit—Initializes network buffers.

NETWRegisterIn—Register a network input channel and post buffers for receiving data.

NETWRegisterOut—Register a network output channel.

NETWSendCntl—Send a control message.

NETWSendFrame—Send a video frame.

NETWPostFrame—Post a video frame buffer to the network interface.

NETWCleanup—Un-initialize NETW support; buffers, etc.

AVSync DLL

AVSync DLL WF provides a library of interfaces designed to support the capture and playback applications in the implementation of the audio-video synchronization technique, including:

Implementing audio system callbacks used to deliver timestamp values.

Implementing audio system latency settings.

Maintaining capture stream and playback stream timestamps.

Video frame comparison with video stream timestamp values.

The interfaces provided by the AVSync DLL are as follows:

AVInit—Initialization. Includes getting critical AV sync values from INI file.

AVRegisterMonitor—Register timestamp callback for a video stream.

AVUnRegisterMonitor—Unregister timestamp callback for a video stream.

AVSetALatency—Set a capture or playback audio latency value.

AVReSetALatency—Reset a capture or playback audio latency value.

AVFifoHighWaterMark—Return a configuration-defined value for the high water mark of a video frame FIFO. (Used in VPlay SyncFilter.)

AVFrameTimeStamp—Time stamp a video frame with an associated audio capture time stamp.

AVFrameSync—Determine if a video frame is "in-sync" as defined for "in-sync," "out-of-sync," and "way-out-of-sync" disclosed earlier in this specification.

Video Capture Driver

Video capture driver **522** of FIG. **5** follows driver specifications set forth in the Microsoft® Video for Windows (VfW) Developer Kit documentation. This documentation specifies a series of application program interfaces (APIs) to which the video capture driver responds. Microsoft® Video for Windows is a Microsoft extension to the Microsoft® Windows operating system. VfW provides a common framework to integrate audio and video into an application program. Video capture driver **522** extends the basic Microsoft® API definitions by providing six "custom" APIs that provide direct control of enhancements to the standard VfW specification to enable and control bit rate throttling and local video monitoring.

Bit rate throttling controls the bit rate of a transmitted video conference data stream. Bit rate throttling is based on two independent parameters: the quality of the captured video image and the image capture frame rate. A user of conferencing system **100** is able to vary the relative importance of these two parameters with a custom capture driver API. A high-quality image has more fine detail information than a low-quality image.

The data bandwidth capacity of the video conference communication channel is fixed. The amount of captured video data to be transmitted is variable, depending upon the amount of motion that is present in the video image. The capture driver is able to control the amount of data that is captured by changing the quality of the next captured video frame and by not capturing the next video frame ("dropping" the frame).

The image quality is determined on a frame-by-frame basis using the following equation:

HUAWEI EX. 1016 - 543/714

$$\text{Quality} = \frac{(\text{TargetSize} - \text{ActualFrameSize})}{\text{ConstantScaleFactor}}$$

Quality is the relative image quality of the next captured frame. A lower quality number represents a lower image quality (less image detail). TargetSize is the desired size of a captured and compressed frame. TargetSize is based on a fixed, desired capture frame rate.

Normally, the capture driver captures new video frames at a fixed, periodic rate which is set by the audio/video conference application program. The capture driver keeps a running total of the available communication channel bandwidth. When the capture driver is ready to capture the next video frame, it first checks the available channel bandwidth and if there is insufficient bandwidth (due to a large, previously captured frame), then the capture driver delays capturing the next video frame until sufficient bandwidth is available. Finally, the size of the captured video frame is subtracted from the available channel bandwidth total.

A user of conferencing system **100** may control the relationship between reduced image quality and dropped frames by setting the minimum image quality value. The minimum image quality value controls the range of permitted image qualities, from a wide range down to a narrow range of only the best image qualities.

Bit rate throttling is implemented inside of the video capture driver and is controlled by the following VfW extension APIs:

CUSTOM_SET_DATA_RATE	Sets the data rate of the communications channel.
CUSTOM_SET_QUAL_PERCENT	Sets the minimum image quality value.
CUSTOM_SET_FPS	Sets the desired capture frame rate.

The local video monitoring extension to VfW gives the video capture driver the ability to output simultaneously both a compressed and a non-compressed image data stream to the application, while remaining fully compatible with the Microsoft® VfW interface specification. Without local video monitoring, the audio/video conferencing application program would be required to decompress and display the image stream generated by the capture driver, which places an additional burden on the host processor and decreases the frame update rate of the displayed image.

The VfW interface specification requires that compressed image data be placed in an output buffer. When local video monitoring is active, an uncompressed copy of the same image frame is appended to the output buffer immediately following the compressed image data. The capture driver generates control information associated with the output buffer. This control information reflects only the compressed image block of the output buffer and does not indicate the presence of the uncompressed image block, making local video monitoring fully compatible with other VfW applications. A "reserved," 32-bit data word in the VfW control information block indicates to a local video monitor aware application that there is a valid uncompressed video image block in the output buffer. The application program may then read and directly display the uncompressed video image block from the output buffer.

The uncompressed image data may be in either Device Independent Bitmap (DIB) or YUV9 format. DIB format images may be displayed directly on the computer monitor. YUV9 format images may be increased in size while retaining image quality. YUV9 images are converted into DIB format before they are displayed on the computer monitor.

The capture driver allows the uncompressed video image to be captured either normally or mirrored (reversed left to right). In normal mode, the local video monitoring image appears as it is viewed by a video camera—printing appears correctly in the displayed image. In mirrored mode, the local video monitoring image appears as if it were being viewed in a mirror.

The CUSTOM_SET_DIB_CONTROL extension API controls the local video monitoring capabilities of the video capture driver.

Custom APIs for Video Capture Driver

The CUSTOM_SET_FPS message sets the frame rate for a video capture. This message can only be used while in streaming capture mode.

The CUSTOM_SET_KEY message informs the driver to produce one key frame as soon as possible. The capture driver will commonly produce one delta frame before the key. Once the key frame has been encoded, delta frames will follow normally.

The CUSTOM_SET_DATA_RATE message informs the driver to set an output data rate. This data rate value is in KBits per second and typically corresponds to the data rate of the communications channel over which the compressed video data will be transmitted.

The CUSTOM_SET_QUAL_PERCENT message controls the relationship between reducing the image quality and dropping video frames when the compressed video data stream size exceeds the data rate set by the CUSTOM_SET_DATA_RATE message. For example, a CUSTOM_SET_QUAL_PERCENT value of 0 means that the driver should reduce the image quality as much as possible before dropping frames and a value of 100 means that video frames should be dropped before the image quality is lowered.

The CUSTOM_SET_DIB_CONTROL message controls the 8-bit DIB/YUV9 format image output when the IRV compression format has been selected. The IRV driver is able to simultaneously generate the IRV compressed data stream plus an uncompressed image in either DIB or YUV9 format. If enabled, the IRV driver can return the DIB image in either (80×60) or (160×120) pixel resolution. The (160×120) image is also available in YUV9 format. All images are available in either minored (reversed left to right) or a normal image. This API controls the following four parameters:

DIB enable/disable

Mirrored/normal image

The DIB image size

Image data format The default condition is for the uncompressed image to be disabled. Once set, these control flags remains in effect until changed by another CUSTOM_SET_DIB_CONTROL message. The uncompressed image data is appended to the video data buffer immediately following the compressed IRV image data. The uncompressed DIB or YUV9 data have the bottom scanline data first and the top scan-line data last in the buffer.

The CUSTOM_SET_VIDEO message controls the video demodulator CONTRAST, BRIGHTNESS, HUE (TINT), and SATURATION parameters. These video parameters are also set by the capture driver at initialization and via the Video Control dialog box.

Video Microcode

The video microcode **530** of FIG. **5** running on video board **204** of FIG. **2** performs video compression. The preferred video compression technique is disclosed in later sections of this specification starting with the section entitled "Compressed Video Bitstream."

HUAWEI EX. 1016 - 544/714

Audio Subsystem

The audio subsystem provides full duplex audio between two conferencing systems **100**. The audio streams in both directions preferably run virtually error free, and do not break up due to activity on host processor **202**. While the video subsystem is responsible for synchronizing video with audio, the audio subsystem provides an interface to retrieve synchronization information and for control over audio latency. The synchronization information and latency control is provided through an interface internal to the audio and video subsystems.

The audio subsystem provides an interface for control of the audio streams. Output volume, selection of an audio compression method, sample size, and sample rate are examples of audio attributes that may be selected or adjusted through the interface. In addition to controlling audio attributes, the audio subsystem provides an interface to send audio streams out to the network, receive and play audio streams from the network, and monitor the local audio stream.

When audio/comm board **206** is not being used for video conferencing, the Microsoft® Wave interface provides access to the stereo audio codec (SAC). Wave driver **524** supports all of the predefined Microsoft® sample rates, full duplex audio, both eight and sixteen bit samples, and mono or stereo audio. Wave driver **524** provides the audio subsystem with a private interface that allows the Wave driver to be disabled.

In a preferred embodiment, the Microsoft® Wave interface performs record and playback of audio during a conferencing session. To achieve this, the audio subsystem and the Wave implementation cooperate during video conferencing so that the audio stream(s) can be split between the Wave interface and the source/sink of the audio subsystem.

Referring now to FIG. **13**, there is shown a block diagram of the architecture of the audio subsystem, according to a preferred embodiment of the present invention. The audio subsystem is structured as a "DSP application." Conforming with the DSP architecture forces the audio subsystem's implementation to be split between host processor **202** and audio/comm board **206**. Conceptually, audio tasks on the audio/comm board communicate directly with a counterpart on the host processor. For example, Wave driver **524** (on the host processor) communicates directly with Wave task **534** (on the audio/comm board). In FIG. **13**, these communications are represented by broken lines representing virtual connections.

The bulk of the audio subsystem is implemented on the audio/comm board as a Spectron SPOX® DSP operating system task. The portion of the audio subsystem on the host processor provides an interface to control the SPOX® operating system audio task. The programming interface to the audio subsystem is implemented as a DLL on top of DSP interface **528**. The DLL will translate all function calls into DSP messages and respond to messages passed from audio task **538** to the host processor.

The audio task **538** (running on the audio/comm board) responds to control information and requests for status from audio manager **520** (running on the host processor). The audio task is also responsible for hardware monitoring of the audio input source on the audio output sink. A majority of the audio task's execution time is spent fulfilling its third and primary responsibility: full duplex audio communication between two conferencing systems.

The conferencing application's interface to the audio subsystem is implemented on the host processor, and the audio processing and control is implemented on the audio/comm board as a SPOX® operating system task. These two software components interface with each other through messages passed through the DSP interface **528** of FIG. **5**.

Referring again to FIG. **1**, in order for the audio subsystem to achieve full duplex communication between two conferencing systems, there is a network connection (i.e., ISDN line **110**) between two conferencing systems. Both conferencing systems run the same software. This allows the audio task on one conferencing system to communicate with another instantiation of itself on the other conferencing system. The ISDN connection is full duplex. There are two B-Channels in each direction. Logical audio channels flowing through the ISDN connection are provided by the network tasks and have no physical representation. The audio task on each of the conferencing systems is responsible for playing back the compressed audio generated on the remote system, and for transferring the compressed audio generated locally to the remote system.

Referring now to FIGS. **1** and **13**, audio samples generated on conferencing system A are first sampled by microphone **104**, digitized by the stereo audio codec (SAC), filtered and compressed by the stack of device drivers **1304**, and delivered to the audio task **538**. The audio task packetizes the compressed audio (by time stamping the audio information), and then sends the audio to comm task **540** for delivery to the remote system. The audio samples consumed (i.e., played back) by conferencing system A are delivered by the comm task after conferencing system B has gone through the same process as conferencing system A to generate and send a packet. Once conferencing system A has the audio packet generated by conferencing system B, the comm task records the time stamp, and sends the packet down the device stack **1302** to be decompressed and sent to the codec (i.e., audio hardware **1306**). As the remote audio samples are being transferred to the codec, the codec may mix them with local audio samples (depending on whether the local system is in the monitor state or not), and finally sends the samples to the attached speaker **108**.

Audio API

Referring again to FIG. **5**, the audio API **512** for the audio subsystem is an internal programming interface used by other software components of the conferencing system, specifically video manager **516** and the conferencing API **506**. The audio API is a library that is linked in with the calling application. The audio API translates the procedural interface into DriverProc messages. See Microsoft® Device Driver Development Kit (DDK) and Software Development Kit (SDK) for the definitions of the DriverProc entry point and installable device drivers. The audio API layer also keeps the state machine for the audio subsystem. This allows the state machine to be implemented only once for every implementation of the audio subsystem.

Audio API **512** of FIG. **5** provides an interface between audio/video conferencing application **502** and the audio subsystem. Audio API **512** provides the following services:

Capture Service	Captures a single audio stream continuously from a local audio hardware source, for example, a microphone, and directs the audio stream to a audio software output sink (i.e., a network destination).
Monitor Service	Monitors the audio stream being captured from the local audio hardware by playing the audio stream locally. Note: This function intercepts and displays a audio

HUAWEI EX. 1016 - 545/714

-continued

	stream at the hardware board when the stream is first captured. This operation is similar to a "Short circuit" or a UNIX tee and is different from the "play" function. The play function gets and displays the audio stream at the host.
Play Service	Plays an audio stream continuously by consuming the audio data from an audio software source (i.e., a network source).
Link-In Service	Links an audio network source to be the input of an audio stream played locally. This service allows applications to change dynamically the software input source of an audio stream.
Link-Out Service	Links a network source to be the output of an audio stream captured locally. This service allows applications to change dynamically the software output source of an audio stream.
Control Service	Controls the audio stream "on the fly," including adjusting gain, volume, and latency.
Information Service	Returns requested information regarding the specified video stream.
Initialization/Configuration	Initialize at OPEN time.

Audio API **512** supports the following function calls by audio/video conferencing application **502** to the audio subsystem:

AGetNumDevs	Retrieves the number of different audio managers installed on the system.
AGetDevCaps	Fills the ADevCaps structure with information regarding the specified audio manager.
AOpen	Opens an audio stream with specified attributes by allocating all necessary system resources (e.g., internal data structures) for it.
ACapture	Starts/stops capturing an audio stream from a local audio hardware source, such as a microphone.
AMonitor	Starts/stops monitoring an audio stream captured from a local microphone.
APlay	Starts/stops playing an audio stream by consuming the audio data from an audio network source.
ALinkIn	Links/unlinks a network input channel or an input file to/from the specified audio stream that will be played or is being played locally.
ALinkOut	Links/unlinks a network output channel to/from the specified audio stream that will be captured or is being captured from the local microphone.
ACntl	Controls an audio stream by adjusting its parameters (e.g., gain, volume).
AGetInfo	Returns the status (AINFO and state) of an audio stream.
AClose	Closes an audio stream and releases all system resources allocated for this stream.
ARegisterMonitor	Registers an audio stream monitor.
APacketNumber	Returns the packet number of the current audio packet being played back or recorded.

These functions are defined in further detail later in this specification in a section entitled "Data Structures, Functions, and Messages."

Referring now to FIG. 14, there is shown a representation of the audio FSM for the local audio stream and the remote audio stream of a conferencing system during a conferencing session, according to a preferred embodiment of the present invention. The possible audio states are as follows:

AST_INIT	Initial state - state of local and remote audio streams after the application calls the CF_Init function.
AST_OPEN	Open state - state of the local/remote audio stream after system resources have been allocated.
AST_CAPTURE	Capture state - state of local audio stream being captured.
AST_LINKOUT	Link-out state - state of local audio stream being linked/unlinked to audio output (e.g., network output channel or output file).
AST_LINKIN	Link-in state - state of remote audio stream being linked/unlinked to audio input (e.g., network input channel or input file).
AST_PLAY	Play state - state of remote audio stream being played.
AST_ERROR	Error state - state of local/remote audio stream after a system resource failure occurs.

In a typical conferencing session between a caller and a callee, both the local and remote audio streams begin in the AST_INIT audio state of FIG. 14. The application calls the AOpen function to open the local audio stream, taking the local audio stream from the AST_INIT audio state to the AST_OPEN audio state. The application then calls the ACapture function to begin capturing the local audio stream, taking the local audio stream from the AST_OPEN audio state to the AST_CAPTURE audio state. The application then calls the ALinkOut function to link the local audio stream to the audio output channel, taking the local audio stream from the AST_CAPTURE audio state to the AST_LINKOUT audio state.

The application calls the AOpen function to open the remote audio stream, taking the remote audio stream from the AST_INIT audio state to the AST_OPEN audio state. The application then calls the ALinkIn function to link the remote audio stream to the audio input channel, taking the remote audio stream from the AST_OPEN audio state to the AST_LINKIN audio state. The application then calls the APlay function to begin playing the remote audio stream, taking the remote audio stream from the AST_LINKIN audio state to the AST_PLAY audio state. The conferencing session proceeds without changing the audio states of either the local or remote audio stream.

When the conferencing session is to be terminated, the application calls the AClose function to close the remote audio channel, taking the remote audio stream from the AST_PLAY audio state to the AST_INIT audio state. The application also calls the AClose function to close the local audio channel, taking the local audio stream from the AST_LINKOUT audio state to the AST_INIT audio state.

This described scenario is just one possible audio scenario. Those skilled in the art will understand that other scenarios may be constructed using the following additional functions and state transitions:

- The application calls the ALinkOut function to unlink the local audio stream from the audio output channel, taking the local audio stream from the AST_LINKOUT audio state to the AST_CAPTURE audio state.
- The application calls the ACapture function to stop capturing the local audio stream, taking the local audio stream from the AST_CAPTURE audio state to the AST_OPEN audio state.
- The application calls the AClose function to close the local audio stream, taking the local audio stream from the AST_OPEN audio state to the AST_INIT audio state.
- The application calls the AClose function to close the local audio stream, taking the local audio stream from

HUAWEI EX. 1016 - 546/714

the AST_CAPTURE audio state to the AST_INIT audio state.

The application calls the AClose function to recover from a system resource failure, taking the local audio stream from the AST_ERROR audio state to the AST_INIT audio state.

The application calls the APlay function to stop playing the remote audio stream, taking the remote audio stream from the AST_PLAY audio state to the AST_LINKIN audio state.

The application calls the ALinkIn function to unlink the remote audio stream from the audio input channel, taking the remote audio stream from the AST_LINKIN audio state to the AST_OPEN audio state.

The application calls the AClose function to close the remote audio stream, taking the remote audio stream from the AST_OPEN audio state to the AST_INIT audio state.

The application calls the AClose function to close the remote audio stream, taking the remote audio stream from the AST_LINKIN audio state to the AST_INIT audio state.

The application calls the AClose function to recover from a system resource failure, taking the remote audio stream from the AST_ERROR audio state to the AST_INIT audio state.

The AGetDevCaps and AGetNumDevs functions may be called by the application from any audio state of either the local or remote audio stream. The AGetInfo, ACntl, and APacketNumber functions may be called by the application from any audio state of either the local or remote audio stream, except for the AST_INIT state. The AMonitor function may be called by the application for the local audio stream from either the AST_CAPTURE or AST_LINKOUT audio states. The ARegisterMonitor function may be called by the application for the local audio stream from the AST_LINKOUT audio state or for the remote audio stream from either the AST_LINKIN or AST_PLAY audio states. All of the functions described in this paragraph leave the audio state unchanged.

Audio Manager

The function of audio manager **520** of FIGS. **5** and **13**, a Microsoft® Windows installable device driver, is to interface with the audio task **538** running on the audio/comm board **206** through the DSP interface **532**. By using the installable device driver model, many different implementations of the audio manager may co-exist on the same machine. Audio manager **520** has two logical parts:

A device driver interface (DDI) that comprises the messages the device driver expects, and

An interface with DSP interface **528**.

Audio Manager Device Driver Interface

The device driver interface specifies the entry points and messages that the audio manager's installable device driver supports. The entry points are the same for all installable device drivers (i.e., Microsoft® WEP, LIBENTRY, and DriverProc). All messages are passed through the DriverProc entry point. Messages concerning loading, unloading, initializing, opening, closing, and configuring the device driver are predefined by Microsoft®. Those messages specific to the audio manager are defined in relation to the constant MSG_AUDIO_MANAGER (these message will range from DRV_RESERVED to DRV_USER as defined in Microsoft® WINDOWS.H). All messages that apply to an audio stream are serialized (i.e., the application does not have more than one message per audio stream pending).

The installable device driver implementing the audio manager responds to the open protocol messages defined by Microsoft®. The expected messages (generated by a Microsoft® OpenDriver SDK call to installable device drivers) and the drivers response are as follows:

DRV_LOAD	Reads any configuration parameters associated with the driver. Allocates any memory required for execution. This call is only made the first time the driver is opened.
DRV_ENABLE	Set up the Wave driver to work with the audio manager. Ensures that an audio/comm board is installed and functional. For audio/comm board 206 of FIG. 2, this means the DSP interface 532 is accessible. This call is only made the first time the driver is opened.
DRV_OPEN	Allocates the per application data. This includes information such as the callback and the application instance data. If this is an input or output call, starts the DSP audio task and sets up communication between host processor and the DSP audio task (e.g., sets up mail boxes, registers callbacks). The audio manager may be opened once for input, once for output (i.e., it supports one full duplex conversation), and any number of times for device capabilities query. This call is made each time OpenDriver is called.

These three messages are generated in response to a single application call (OpenDriver). The OpenDriver call is passed a pointer to the following structure in the lParam2 of the parameter of the call:

```
typedef struct OpenAudioMangerStruct {
    BOOL        GetDevCaps;
    LPACAPS     lpACaps;
    DWORD       SynchronousError;
    LPAINFO     AInfo;
    DWORD       dwCallback;
    DWORD       dwCallbackInstance;
    DWORD       dwFlags;
    DWORD       wField;
} OpenAudioManager, FAR * lpOpenAudioManager;
```

All three messages receive this parameter in their lParam2 parameter. If the open is being made for either capture or playback, the caller is notified in response to an asynchronous event (i.e., DSP_OPEN generated by dspOpenTask). If the open is being done in order to query the devices capabilities (indicated by the field OpenAudioManager with GetDevCaps being set to TRUE), the open is synchronous and only fails if the board cannot be accessed.

The DRV_OPEN handler always checks for error conditions, begins execution of the audio thread, and allocates per audio stream state information. Once the open command sets state indicating that a DRV_OPEN is pending, it will initiate execution of the audio thread via the DSP interface.

dspOpenTask posts a callback when the audio thread has successfully begun. This callback is ignored unless it indicates an error. The task will call back to the audio driver once it has allocated all the necessary resources on the board. The callback from the DSP interface sets the internal state of the device driver to indicate that the thread is running. Once the task has responded, a DRV_OPEN message call back (i.e., post message) back to the caller of the open command with the following values:

Param1 equals A_OK, and

Param2 contains the error message returned by the board.

The installable device driver will respond to the close protocol messages defined by Microsoft®. The expected

HUAWEI EX. 1016 - 547/714

messages (generated by the Microsoft® SDK CloseDriver call to installable device drivers) and the drivers response are as follows:

DRV_CLOSE	Frees the per application data allocated in DRV_OPEN message.
DRV_DISABLE	Shuts down the DSP audio task. Enables the Wave driver and Wave task. Frees all memory allocated during DRV_LOAD.
DRV_FREE	Ignored.

This call sequence is symmetric with respect to the call sequence generated by OpenDriver. It has the same characteristics and behavior as the open sequence does. Namely, it receives one to three messages from the CloseDriver call dependent on the driver's state and it generates one callback per CloseDriver call. Three messages are received when the driver's final instance is being closed. Only the DRV_CLOSE message is generated for other CloseDriver calls.

DRV_CLOSE message closes the audio thread that corresponds to the audio stream indicated by HASTRM. The response to the close message is in response to a message sent back from the board indicating that the driver has closed. Therefore, this call is asynchronous. There is a race condition on close. The audio task could close down after the close from the DRV has completed. If this is the case, the DRIVER could be unloaded before the callback occurs. If this happens, the callback will call into nonexistent code. The full driver close sequence is preferably generated on the last close as indicated by the SDK. See Microsoft® Programmers Reference, Volume 1: Overview, pages 445–446).

The installable device driver implementing the host portion of the audio subsystem recognizes specific messages from the audio API layer. Messages are passed to the driver through the SendDriverMessage and are received by DrvProc. The messages and their expected parameters are:

Message	lParam1	lParam2
AM_CAPTURE	BOOL	LPDWORD
AM_MUTE	BOOL	LPDWORD
AM_PLAY	BOOL	LPDWORD
AM_LINKIN	FAR * ALinkStruct	LPDWORD
AM_LINKOUT	FAR * ALinkStruct	LPDWORD
AM_CTRL	FAR * ControlStruct	LPDWORD
AM_REGISTERMON	LPRegisterInfo	LPDWORD
AM_PACKETNUMBER	NULL	NULL

AM_CAPTURE Message

The AM_CAPTURE message is sent to the driver whenever the audio manager function ACapture is called. This message uses Param1 to pass a boolean value and Param2 is used for a long pointer to a DWORD where synchronous errors can be returned. The stream handle will be checked to ensure that it is a capture stream, and that there is not a message pending. The state is not checked because the interface module should keep the state. If an error state is detected, the appropriate error message will be returned. The BOOL passed in Param2 indicates whether to start or stop capturing. A value of TRUE indicates capturing should staff, a value of FALSE that capturing should be stopped. ACAPTURE_TMSG is sent to the audio task running on the audio/comm board and the message pending flag is set for that stream. When the audio task receives the message via the DSP interface, it will change its state and call back to the driver. When the driver receives this callback, it will call back/post message to the appropriate entity on the host processor, and cancel the message pending flag. This call is a toggle, no state is kept by the driver, and it will call the DSP interface regardless of the value of the BOOL.

AM_MUTE Message

The AM_MUTE message is sent to the driver whenever the audio manager function AMute is called. This message uses Param1 to pass a boolean value and Param2 a long pointer to a DWORD for a synchronous error value. The stream handle is checked to ensure that it is a capture stream, and that no messages are pending. If an error state is detected, the appropriate error message is returned. The BOOL passed in Param1 indicates whether to start or stop muting. A value of TRUE indicates muting should start, a value of FALSE that muting should be turned off. The driver posts the message AMUTE_TMSG to the audio task through the DSP interface, and sets the message pending flag. When the driver receives this callback, it will call back/post message to the appropriate entity on the host processor, and then cancel the message pending flag.

AM_PLAY Message

The AM_PLAY message is sent to the driver whenever the audio manager function APlay is called. This message uses Param1 to pass an audio manager stream handle (HASTRM) and Param2 to pass a boolean value. The APlay message handler checks the stream handle to ensure that it is a playback stream, and verifies that there is not a message pending against this stream. If an error is detected, a call back/post message is made immediately. The BOOL passed in Param1 indicates whether to start or stop playing the remote stream. A value of TRUE indicates that playback should start, a value of FALSE that playback should stop. The APLAY_TMSG is posted to the audio task through the DSP interface and the message pending flag is set for this stream. When the callback is processed, the caller is notified (via callback/post message), and finally the message pending flag for this stream is canceled.

AM_LINKIN Message

The AM_LINKIN message is sent to the driver whenever the audio manager function ALinkIn is called. Param1 passes the Audio Manager stream handle (HASTRM). lParam2 contains a pointer to the following structure:

```
typedef struct_ALinkStruct {
        BOOL        ToLink;
        CHANID      ChanId;
} ALinkStruct, FAR * lpALinkStruct;
```

ToLink contains a BOOL value that indicates whether the stream is being linked in or unlinked (TRUE is linked in and FALSE is unlinked). If no error is detected and ToLink is TRUE, the channel and the playback stream should be linked together. This is done by sending the Audio Task the ALINKIN_TMSG message with the channel ID as a parameter. This causes the Audio Task to link up with the specified comm channel and begin playing incoming audio. Channel ID is sent as a parameter to ALINKIN_TMSG implying that the channel ID is valid in the board environment as well as the host processor. In response to this message, the audio manager registers with the comm task as the owner of the stream.

Breaking the link between the audio stream handle and the channel ID is done when the ToLink field is set to FALSE. The audio manager sends the ALINKIN_TMSG to the task along with the channel ID. Since the link is made, the audio task responds to this message by unlinking the specified channel ID (i.e., it does not play any more audio).

Errors that the host task will detect are as follows:

The channel ID does not represents a valid read stream.

The audio stream handle is already linked or unlinked (detected on host processor).

HUAWEI EX. 1016 - 548/714

The audio stream handle is not a playback handle.

If those or any interface errors (e.g., message pending) are detected, the callback associated with this stream is notified immediately. If no errors are detected, the ALINKIN_TMSGS is issued to the DSP interface and the message pending flag is set for this stream. Upon receiving the callback for this message, the callback associated with this stream is made, and finally the message pending flag is unset.

AM_LINKOUT Message

The AM_LINKOUT message is sent to the driver whenever the audio manager function ALinkOut is called. Param1 passes the audio manager stream handle (HASTRM). lParam2 contains a pointer to the following structure:

```
typedef struct_ALinkStruct {
        BOOL            ToLink;
        CHANID          ChanId;
} ALinkStruct, FAR * lpALinkStruct;
```

ToLink contains a BOOL value that indicates whether the stream is being linked out or unlinked (TRUE is linked out and FALSE is unlinked). If no error is detected and ToLink is TRUE, the channel and the audio in stream should be linked together. This is done by sending the Audio Task the ALINKOUT_TMSG message with the channel ID as a parameter. The Audio Task responds to this by sending audio over the logical channel through the comm task. Channel ID is sent as a parameter to ALINKOUT_TMSG implying that the channel ID is valid in the board environment as well as on the host processor.

Breaking the link between the audio stream handle and the channel ID is done when ToLink field is set to FALSE. The audio manager sends the ALINKOUT_TMSG to the task along with the channel ID. Since the link is made, the Audio Task responds to this message by unlinking the specified channel ID (i.e., it does not send any more audio).

Errors that the host task detects are as follows:

The channel ID does not represents a valid write stream.

The audio stream handle is already linked or unlinked (detected on the host processor).

The audio stream handle is not an audio handle.

If those or any interface errors (e.g., message pending) are detected, the callback associated with this stream is notified immediately. If no errors are detected, the ALINKOUT_TMSG is issued to the DSP interface and the message pending flag is set for this stream. Upon receiving the callback for this message, the callback associated with this stream is made, and finally the message pending flag is unset.

AM_CRTL Message

The AM_CRTL message is sent to the driver whenever the audio manager function ACtrl is called. Param1 contains the HASTRM (the audio stream handle) and Param2 contains a long pointer to the following structure:

```
typedef struct_ControlStruct {
        LPAINFO         lpAinfo;
        DWORD           flags;
} ControlStruct, FAR * lpControlStruct;
```

The flags field is used to indicate which fields of the AINFO structure pointed to by lpAinfo are to be considered. The audio manager tracks the state of the audio task and only adjust it if the flags and AINFO structure actually indicate change.

Error checking will be for:

Valid audio stream state.

Values and fields adjusted are legal.

Pending calls on the current stream.

If there are any errors to be reported, the audio manager immediately issues a callback to the registered callback indicating the error.

If there are no errors, the audio manager makes the audio stream state as pending, saves a copy of the structure and the adjustment to be made, and begins making the adjustments one by one. The adjustments are made by sending the audio task the ACNTL_TMSG message with three arguments in the dwArgs array. The arguments identify the audio stream, the audio attribute to change, and the new value of the audio attribute. Each time the audio task processes one of these messages, it generates a callback to the audio manager. In the callback, the audio manager updates the stream's attributes, removes that flag from the flags field of the structure (remember this is an internal copy), and sends another ACNTL_TMSG for the next flag. Upon receiving the callback for the last flag, the audio manager calls back the registered callback for this stream, and unsets the pending flag for this stream.

AM_REGISTERMON Message

The AM_REGISTERMON message is sent to the driver whenever the audio manager function ARegisterMonitor is called. Param2 contains a LPDWORD for synchronous error messages and Param1 contains a long pointer to the following structure:

```
typedef struct_RegisterMonitor {
        DWORD       dwcallback;
        DWORD       dwCallbackInstance;
        DWORD       dwflags;
        DWORD       dwRequestFrequency;
        LPDWORD     lpdwSetFrequency
} RegisterMonitor, FAR * LPRegisterMonitor;
```

The audio manager calls this routine back with information about the status of the audio packet being recorded/played back by the audio task. There may only be one callback associated with a stream at a time. If there is already a monitor associated with the stream when this call is made, it is replaced.

Errors detected by the audio manager are:

Call pending against this audio stream.

Bad stream handle.

These errors are reported to the callback via the functions return values (i.e., they are reported synchronously).

If the registration is successful, the audio manager sends the audio task a AREGISTERMON_TMSG via the DSP Interface. The first DWORD of dwArgs array contains the audio stream ID, and the second specifies the callback frequency. In response to the AREGISTERMON_TMSG, the audio task calls back with the current audio packet number. The audio task then generates a callback for every N packets of audio to the audio manager. The audio manager callback generates a callback to the monitor function with AM_PACKET_NUMBER as the message, A_OK as PARAM1, and the packet number as PARAM2. When the audio stream being monitored is closed, the audio manager calls back the monitor with A_STREAM_CLOSED as PARAM1.

AM_PACKETNUMBER Message

The AM_PACKETNUMBER message is sent to the driver whenever the audio manager function APacketNumber is called. Param1 and Param2 are NULL. If a monitor is

HUAWEI EX. 1016 - 549/714

registered for this stream handle, the audio task is sent a APACKETNUMBER_TMSG message. In response to this message, the audio task calls back the audio manager with the current packet number. The audio manager in turn calls back the registered monitor with the current packet number.

This is one of the few calls/messages that generates both synchronous and asynchronous error messages. The messages have been kept asynchronous whenever possible to be consistent with the programming model. Synchronous errors that are detected are:

The stream has no monitor registered.

Bad HASTRM handle.

If there is no monitor registered (i.e., no callback function to call) or if the HASTRM handle is invalid (again no callback to call), the error is given synchronously (i.e., as a return value to the function). Asynchronous errors are as follows:

There is a call pending on this audio stream.

The stream is in an invalid state (i.e., not AST_LINKOUT or AST_PLAY).

The asynchronous errors are given to the monitor function, not the callback registered with the audio stream on open.

Audio Manager Interface with the DSP Interface

This section defines the messages that flow between the audio task **538** on the audio/comm board **206** and the installable device driver on the host processor **202**. Messages to the audio task are sent using dspPostMessage. The messages that return information from the audio task to the host driver are delivered as callback messages.

Host Processor to Audio/Comm Board Messages

All messages from the host processor to the audio/comm board are passed in a DSPMSG structure as the dwMsg field. Additional parameters (if used) are specified in the dwArgs DWORD array, and are called out and defined in each of the following messages:

ACAPTURE_TMSG:	Causes the audio task to start or stop the flow of data from the audio source. This message is a toggle (i.e., if the audio is flowing, it is stopped; if it is not, it is started).
AMUTE_TMSG:	Toggles the codec into or takes it out of muting mode.
APLAY_TMSG:	Toggles playback of audio from a network source.
ALINKIN_TMSG:	Connects/disconnects the audio task with a virtual circuit supported by the network task. The virtual circuit ID is passed to the audio task in the first DWORD of the dwArgs array. The virtual circuit (or channel ID) is valid in both the host processor and the audio/comm board environment.
ALINKOUT_TMSG:	Connects the audio task with a virtual circuit supported by the network task. The virtual circuit ID is passed to the audio task in the first DWORD of the dwArgs array.
AREGISTERMON_TMSG:	Registers a monitor on the specified stream. The stream ID is passed to the audio task in the first DWORD of the dwArgs array, the second contains the notification frequency.
APACKETNUMBER_TMSG:	Issues a callback to the Audio Manager defining the current packet number for this stream. The stream ID is passed to the audio task in the first DWORD of the dwArgs array.
ACNTL_TMSG:	Sets the value of the specified attribute on the audio device. Three elements of the dwArgs array are used. The first parameter is the stream ID, the second indicates the audio attribute to be adjusted, and the third is the value of the audio attribute.

Audio/Comm Board to Host Processor Messages

All messages from the audio/comm board to the host processor are passed back through the registered callback function. The message from the DSP task to the host driver are received in the dwParam1 parameter of the registered callback function.

Each message sent to the audio task (running on the audio/comm board) from the host processor is returned by the audio/comm board through the callback function. Each time a message is sent to the audio/comm board, a DSPMSG is generated from the audio/comm board to respond. The message is the same message that was sent to the board. The parameter is in DSPMSG.dwArgs[STATUS_INDEX]. This parameter is either ABOARD_SUCCESS or an error code. Error codes for each of the messages from the board were defined in the previous section of in this specification.

Messages that cause response to host processor action other than just sending messages (e.g., starting the audio task through the DSP interface) are as follows:

AOPEN_TMSG	Message returned in response to the device opening properly (i.e., called in response to dspOpenTask).
ASETUP_TMSG	Once the installable driver receives the AOPEN_TMSG from the board, it sends a data stream buffer to the task containing additional initialization information (e.g., compression and SAC stream stack and initial attributes). Once the task has processed this information, it sends an ASETUP_TMSG message to the host.
ACHANNEL_HANGUP_TMSG	This message is delivered to the host when the Communication subsystem notifies the task that the channel upon which it was transmitting/receiving audio samples went away.

Wave Audio Implementation

The DSP Wave driver design follows the same architecture as the audio subsystem (i.e., split between the host processor and the audio/comm board). For full details on the Microsoft® Wave interface, see the Microsoft® Multimedia Programmer's Reference. Some of the control functions provided by the audio manager are duplicated in the Wave/Media Control Interface. Others, such as input gain or input and output device selection, are controlled exclusively by the Media control interface.

Audio Subsystem Audio/Comm Board-Resident Implementation

The audio task **538** of FIGS. **5** and **13** is actually a pair of SPOX® operating system tasks that execute on the audio/

HUAWEI EX. 1016 - 550/714

comm board **206** and together implement capture and playback service requests issued by the host processor side of the audio subsystem. Referring again to FIG. **13**, the audio task connects to three other subsystems running under SPOX® operating system:

1. The audio task connects to and exchanges messages with the host processor side of the audio subsystem via the host device driver **536** (DSH_HOST). TMB_getMessage and TMB_postMessage calls are used to receive messages from and route messages to the audio manager **520** through the host device driver **536**.

2. The audio task connects to the audio hardware on the audio/comm board via a stream of stackable drivers terminated by the SAC device driver. This connection is bidirectional. Stackable drivers on the stream running from the SAC driver to the audio task include the compression driver and automatic gain control driver.

3. The audio task connects with comm task **540** (the board-resident portion of the comm subsystem) via a mailbox interface exchanging control messages and a streams interface for exchanging data. The streams interface involves the use of pipe drivers. Ultimately, the interface allows the audio task to exchange compressed data packets of audio samples across ISDN lines with a peer audio task running on an audio/comm board located at the remote end of a video conference.

The audio task is composed of two SPOX® operating system tasks referred to as threads for the purposes of this specification. One thread handles the capture side of the audio subsystem, while the other supports the playback side. Each thread is created by the host processor side of the audio subsystem in response to an OpenDriver call issued by the application. The threads exchange compressed audio buffers with the comm task via a streams interface that involves bouncing buffers off a pipe driver. Control messages are exchanged between these threads and the comm task using the mailbox interface which is already in place for transferring messages between DSP tasks and the host device driver **536**.

The playback thread blocks waiting for audio buffers from the comm task. The capture thread blocks waiting for audio buffers from the SAC. While active, each thread checks its dedicated control channel mailbox for commands received from the host processor as well as unsolicited messages sent by the comm task. A control channel is defined as the pair of mailboxes used to communicate between a SPOX® operating system task and its DSP counterpart running on the host processor.

Audio Task Interface with Host Device Driver

The host processor creates SPOX® operating system tasks for audio capture and playback. Among the input parameters made available to these threads at entry is the name each thread will use to create a stream of stackable drivers culminating in the SAC device driver. Once the tasks are created, they send an AOPEN_TMSG message to the host processor. This prompts the host processor to deliver a buffer of additional information to the task. One of the fields in the sent structure is a pathname such as:

```
"/tsp/gsm:0/mxr0/esp/VCadc8K"
```

The task uses this pathname and other sent parameters to complete its initialization. When finished, it sends an ASETUP_TMSG message to the host signaling its readiness to receive additional instructions.

In most cases, the threads do not block while getting messages from TMB_MYMBOX or posting messages to TMB_HOSTMBOX. In other words, TMB_getMessage and TMB_putMessage are called with timeout=0. Therefore, these mailboxes are preferably of sufficient depth such that messages sent to the Host by the threads are not dropped. The dspOpenTask lpdspTaskAttrs "nMailboxDepth" parameter are preferably set higher than the default value of 4. The audio task/host interface does not support a data channel. Thus, the "nToDsp" and "nFromDsp" fields of dspOpenTask lpdspTaskAttrs are preferably set to 0.

Audio Task Interface with Audio Hardware

Referring now to FIG. **15**, there is shown a block diagram of interface between the audio task **538** and the audio hardware of audio/comm board **206** of FIG. **13**, according to a preferred embodiment of the present invention. FIG. **15** illustrates how input and output streams to the audio hardware might look after successful initialization of the capture and playback threads, respectively.

On the capture side, audio data is copied into streams by the SAC device driver **1304** (the SAC). The buffer comes from a pool allocated to this IO_SOURCE driver via IO_free() calls. The data works its way up to the capture thread **1502** when the latter task issues an SS_get() call. The data is transformed each time it passes through a stackable driver. The mixer/splitter driver **1510** may amplify the audio signals or it may split the audio stream sending the second half up to the host to allow for the recording of a video conference. The data is then compressed by the compression driver **1508**. Finally, timestamp driver **1506** appends a timestamp to the buffer before the capture thread receives it completing the SS_get(). The capture thread **1502** either queues the buffer internally or calls IO_free() (depending on whether the capture thread is trying to establish some kind of latency or is active but unlinked), or the capture thread sends the buffer to the comm task via the pipe driver interface.

On the playback side, audio data is received in streams buffers piped to the playback thread **1504** from the comm task. The playback thread internally queues the buffer or frees the buffer by passing the buffer back to the pipe driver; or the playback thread calls SS_put() to send the buffer down the playback stream ultimately to the SAC **1304** where the samples are played. First, the timestamp is stripped off the buffer by timestamp driver **1506**. Next, the buffer is decompressed by decompression driver **1508**. Prior to it being played, the audio data undergoes one or more transformations mixing in other sound or amplifying the sound (mixer/splitter driver **1510**), and reducing or eliminating echoes (echo/suppression driver **1512**). Once the data has been output to the sound hardware, the containing buffer is ready to be freed back up the stream satisfying an IO_alloc() issued from the layers above.

Timestamp Driver

The video manager synchronizes with the audio stream. Therefore, all the audio task needs to do is timestamp its stream and provide an interface allowing visibility by the video manager into this timestamping. The interface for this is through the host processor requests AREGISTERMON_TMSG and APACKETNUMBER_TMSG. The timestamp is a 32-bit quantity that is initialized to 1, incremented for each block passed to the audio task from the IO_SOURCE stack and added to the block. The timestamp is stripped from the block once received by the audio task executing on the remote node.

The appending and stripping of the timestamp is done by the timestamp driver **1506** of FIG. **15**. Performing the stamping within a separate driver simplifies the audio task threads by removing the responsibility of setting up and

HUAWEI EX. 1016 - 551/714

maintaining this header. However, in order to implement the APACKETNUMBER_TMSG host command, the threads are able to access and interpret this header in order to determine the packet number.

On the capture side of the audio task, the capture thread will have allocated stream buffers whose size is large enough to contain both the packet header as well as the compressed data block. The timestamp driver deals with each buffer as a SPOX® operating system IO_Frame data type. Before the frames are IO_free()'ed to the compression stackable driver below, the timestamp driver subtracts the size of the packet header from the frame's current size. When the frame returns to the timestamp driver via IO_get(), the driver appends the timestamp by restoring the size to "maxsize" and filling the unused area with the new header. The handling is reversed for the playback side. Buffers received from the comm task contain both the compressed data block and header. The timestamp driver strips the header by reducing "size" to "maxsize" minus the header size.

(De)Compression Drivers

In a preferred embodiment, the DSP architecture bundles the encode and decode functions into one driver that is always stacked between the audio task and the host processor. The driver performs either compress or decompress functions depending on whether it is stacked within an IO_SINK or IO_SOURCE stream, respectively. Under this scheme, the audio task only handles uncompressed data; the stackable driver compresses the data stream on route to the host processor (IO_SINK) and decompresses the stream if data is being read from the host processor (IO_SOURCE) for playback.

In an alternative preferred embodiment, the audio task deals with compressed data in fixed blocks since that is what gets stamped or examined on route to or from the ISDN comm task, respectively. In this embodiment, the DSP architecture is implemented by the DXF transformation driver **1508**. Either driver may be placed in an IO_SOURCE or IO_SINK stream.

Due to the audio subsystem's preference to manage latency reliably, the audio task threads know how much capture or playback time is represented by each compressed data sample. On the capture side, this time may be calculated from the data returned by the compression driver via the DCO_FILLEXTWAVEFORMAT control command. DCO_ExtWaveFormat data fields "nSamplesPerSec" and "wBitsPerSample" may be used to calculate a buffer size that provides control over latency at a reasonable level of granularity.

Consider the following example. Suppose we desire to increase or decrease latency in 50 millisecond increments. Suppose further that a DCO_FILLEXTWAVEFORMAT command issued to the compression driver returns the following fields:

nChannels =	1
nSamplesPerSec =	8000
nBlockAlign =	0
wBitsPerSample =	2

If we assume that compressed samples are packed into each 32-bit word contained in the buffer, then one TI C31 DSP word contains **16** compressed samples. The buffer size containing 50 ms worth of data would be:

$$\text{words} = \left(8000\frac{\text{Samples}}{\text{Sec}} \times 0.05\,\text{Sec}\right) \div \frac{16\text{Samples}}{\text{word}} = 25$$

To this quantity, the capture thread adds the size of the packet header and uses the total in allocating as many streams buffers as needed to service its IO_SOURCE stream.

On the receiving side, the playback thread receives the packet containing the buffer of compressed data. The DCO_FILLEXTWAVEFORMAT control command is supported by the encoder, not the decoder which the playback thread has stacked in its IO_SINK stream. In fact, the thread has to send the driver a DCO_SETEXTWAVEFORMAT command before it will decompress any data. Thus, we need a mechanism for providing the playback thread a DCO_ExtWaveFormat structure for handshaking with decompression driver prior to entering the AST_PLAY state.

Mixer/Splitter Driver

The mixer/splitter driver **1510** (i.e., the mixer) is a stackable driver that coordinates multiple accesses to the SAC **1304**, as required by conferencing. The mixer allows multiple-simultaneous opens of the SAC for both input and output and mixes the channels. The mixer also supports priority preemption of the control-only SAC device "sac-ctrl."

The SPOX® operating system image for the audio/comm board has mappings in the device name space to transform references to SAC devices into a device stack specification that includes the mixer. For example, a task that attempts to open "/sac" will actually open "/mxr1/sac". The mapping is transparent to the task. To avoid getting mapped through the mixer, an alternative set of names is provided. The alternative names consist of the standard device name prefixed with "VC". For example, to open the device "adc8K" without going through the mixer, a task would use the name "/VCadc8K". To obtain priority access to the SAC, the software opens the device "/mxr0/VCadc8K".

For output operation, the software opens the mixer with device ID **0**; any other client opens the mixer with device ID **1**. Device ID **0** may be opened only once; when it is, all other currently open channels are muted. That is, output to the channel is discarded. Subsequent opens of device ID **1** are allowed if the sample rate matches. Device ID **1** may be opened as many times as there are channels (other than channel **0**). All opens after the first are rejected, if the sample rate does not match the first open. When more than one channel is open and not muted, the output of all of them is mixed before it is passed on to the SAC.

For input operations, the software opens the mixer with device ID **0**; any other client opens the mixer with device ID **1**. Device ID **0** may be opened only once; when it is, if channel **1** is open, it is muted. That is, get operations return frames of silence. Device ID **1** may be opened once before channel **0** is open (yielding channel **1**: normal record operation). Device ID **1** may also be opened once after channel **0** is opened (yielding channel **2**: conference record operation). In the second case, the sample rate must match that of channel **0**. Channel **1** returns data directly from the SAC (if it is not muted). Channel **0** returns data from the SAC mixed with data from any output channels other than channel **0**. This allows the user to play back a recording during a video conference and have it sent to the remote participant. Channel **2** returns data from the SAC mixed with the output to the SAC. This provides the capability of recording both sides of conference.

There are four control channels, each of which may be opened only once. They are prioritized, with channel **0**

HUAWEI EX. 1016 - 552/714

having the highest priority, and channel 3 having the lowest. Only the open channel with the highest priority is allowed to control the SAC. Non-conferencing software, which opens "/sacctrl", is connected to channel 3, the lowest priority channel.

Mixer Internal Operation

For output operation, the mixer can, in theory, support any number of output channels. The output channels are all equivalent in the sense that the data from all of them is mixed to form the output sent to the SAC. However, there is one channel that is designated the main channel. The first channel opened that is not muted is the main channel. When the main channel is closed, if there are any other non-muted channels open, one of them is promoted to be the main channel. Opening channel 0 (conference output) mutes any channels open at the time and channel 0 cannot be muted. Thus, if channel 0 is open, it is always the main channel. Any open output channel that is not than the main channel is called an auxiliary channel.

When an IO_put operation is performed on a non-muted auxiliary channel, the frame is placed on the channel's ready list. When an IO_put operation is performed on the main channel, data from the auxiliary channels' ready lists are mixed with the frame, and the frame is passed immediately through to the SAC. If an auxiliary channel is not ready, it will be ignored (and a gap will occur in the output from that channel); the main channel cannot be held up waiting for an auxiliary channel.

When an IO_put operation is performed on a muted channel, the frame is placed directly on the channel's free list. The driver then sleeps for a period of time (currently 200 ms) to simulate the time it would take for the data in the frame to be played. This is actually more time than it would normally take for a block of data to be played; this reduces the CPU usage of muted channels.

An IO_alloc operation on the main channel is passed directly through to the SAC; on other channels, it returns a frame from the channel's free list. If a frame is not available, it waits on the condition freeFrameAvailable. When the condition is signaled, it checks again whether the channel is the main channel. If the main channel was closed in the meantime, this channel may have been promoted.

The mixer does not allocate any frames itself. All the frames it manages are those provided by the task by calling IO_free or IO_put. For an auxiliary channel, frames passed to IO_free are placed on the channel's free list. These are then returned to the task when it calls IO alloc. After the contents of a frame passed to IO_put have been mixed with the main channel, the frame is returned to the channel's free list. Since I/O operations on the main channel (including IO_free and IO_alloc) are passed through to the SAC, no buffer management is done by the mixer for the main channel, and the free list and the ready list are empty. However, the mixer does keep track of all frames that have been passed through to the SAC by IO_free or IO_put and returned by IO_get or IO_alloc. This is done to allow for the case where the main channel is preempted by opening the priority channel. In this case, all frames that have been passed to the SAC are recalled and placed on the mixer's free list for that channel.

Another special case is when the main channel is closed, and there is another open non-muted channel. In this case, this other channel is promoted to be the main channel. The frames on its ready list are passed immediately to IO_put to be played, and the frames on its free list are passed to IO_free. These frames are, of course, counted, in case the new main channel is preempted again.

For output mixing, a frame on the ready list of an auxiliary channel is mixed with both the main output channel and with input channel 0 (conference input), if it is open. I/O operations on these two channels are running independently, so the mixer does not know which channel will perform I/O first, or whether operations on the two will strictly alternate, or even if they are using the same frame size. In practice, if the conference input channel is open, the main output channel is conference output, and the two use the same frame size; however, the mixer does not depend on this. However, the auxiliary channel typically will not be using the same frame size as either of the main channels.

To handle this situation, the mixer uses two lists and two index pointers and a flag for each channel. The ready list, where frames are placed when they arrive, contains frames that contain data that needs to be mixed with both the input and the output channel. When either the input side or the output side has used all the data in the first frame on the ready list, the frame is moved to the mix list. The flag is set to indicate whether the mix list contains data for the input side or the output side. If the mix list is empty, both sides take data from the ready list. When all the data in a frame on the mix list has been used, the frame is moved to the free list.

Mixing operations are done in units of a main-channel frame. This may take a portion of an auxiliary channel frame or it may take parts of more than one. The mixing routine loops over the main channel frame. Each pass through the loop, it determines which auxiliary channel frame to mix from, takes as much data from that frame as it can, and moves that frame to a new list if necessary. The auxiliary channel frame to mix from is either the first frame on the mix list, if it is non-empty and the flag is set to indicate that data has not been used from that frame yet, or the first frame on the ready list. The index, either inReadyIndex or outReadyIndex, specifies the first unused sample of the frame.

For example, suppose mixing is with the main input channel (conference in), and the data for an auxiliary output channel is such that the read list contains two frames C and D and the mix list contains two frames A and B, wherein mixFlags equals MXR_INPUT_DATA and inReadyIndex equals 40. Assume further that the frame size on the main channel is 160 words and the frame size on the auxiliary channel is 60 words.

The first time through the loop in mix_frame, the mix list is not empty, and the mix flag indicates that the data on the mix list is for the input channel. The unused 20 samples remaining in the first frame on the mix list are mixed with the first 20 samples of the main channel frame. inReadyIndex is incremented by 20. Since it is now equal to 60, the frame size, we are finished with the frame. The output channel is finished with it, since it is on the mix list, so the frame is moved to the free list and set inReadyIndex to 0.

The second time through the loop, mix_index is 20. All 60 samples are mixed out of the first frame on the mix list, and the frame is moved to the free list.

The third time through the loop, mix_index is 80. The mix list is empty. All 60 samples are mixed out of the first frame on the ready list. Again the frame is finished, but this time it came from the ready list, so it is moved to the mix list. The mix flag is changed to indicate that the mix list now contains data for the output channel. outReadyIndex is not changed, so the output channel will still start mixing from the same offset in the frame that it would have used if the frame had not been touched.

The fourth time through the loop, mix_index is 140. The mix list is not empty, but the mix flag indicates that the data on the mix list is for the output channel, so it is ignored. The

HUAWEI EX. 1016 - 553/714

remaining 20 samples are mixed from the first frame on the ready list. All the data in the frame has not been used, so it is left on the ready list; the next time a frame is processed on the main input channel, processing continues where it left off. After mixing is complete, the ready list contains only frame D, the mix list contains only frame C, mixFlags equals MXR_OUTPUT_DATA, and inReadyIndex equals 20.

After each step described, the data structures are completely self-consistent. In a more typical situation, the frames on the auxiliary channel will be much larger (usually 1024 words), and only a portion of a frame will be used for each frame on the main channel. However, the processing is always similar to one or two of the four steps described in the example.

For input operations, unlike the output channels, the three input channels have distinctly different semantics. The main channel is always channel **0** if it is open, and channel **1** if channel **0** is not open. Channel **1** will always be muted if it is open when channel **0** is opened, and cannot be opened while channel **0** is open. Channel **2** is never: the main channel; it can be opened only while channel **0** is open, and will be muted if channel **0** is closed.

Operation of the main channel is similar to the operation described for output. When IO_get or IO_free is called, the request is passed on to the SAC. For channel **0**, when the frame is returned from the SAC, any output ready on auxiliary output channels is mixed with it before the frame is returned to the caller.

When channel **2** (conference record) is open, output frames on channel **0** (conference output) and input frames on channel **0** (conference input) (including the mixed auxiliary output) are sent to the function record_frame. Record_frame copies these frames to frames allocated from the free list for channel **2**, mixes the input and output channels, and places the mixed frames on the ready list. When IO_get operation is performed on channel **2**, it retrieves a frame from the ready list, blocking if necessary until one is available. If there is no frame on the free list when record_ requires one, the data will not be copied, and there will be a dropout in the recording; however, the main channel cannot be held up waiting for the record channel.

For conference record mixing, record_needs to mix frames from both conference input and conference output into a frame for channel **2**. Again, I/O operations on the conference channels are running independently. The mixer uses the mix list of the conference record channel as a holding place for partially mixed frames. readyIndex contains the number of samples in the first frame on the mix list which are completely mixed. The frame size contains the total number of samples from either channel that have been placed in the frame. The difference between the frame size and readyIndex is the number of samples that have been placed in the frame from one channel but not mixed with the other. The flag mixFlags indicates which channel these samples came from.

Mixing operations are done in units of a main-channel frame, as for output. This may take a portion of a record channel frame or it may take parts of more than one. The mixing routine loops over the main channel frame. Each pass through the loop, it does one of the following:

1. If the mix list contains data from the other channel, mix with the first frame on the mix list. readyIndex indicates the place to start mixing. If the frame is now fully mixed, move it to the ready list.
2. If the mix list contains data from this channel (or equal parts from both channels), and there is free space in the last frame on the mix list, copy the data into that frame. The frame size indicates the place to start copying.
3. If neither of the above is true, allocate a new frame from the free list and add it (empty) to the mix list. On the next iteration, case **2** will be done.

To provide mutual exclusion within the mixer, the mixer uses a semaphore. Every mixer routine that manipulates any of the data for a channel first acquires the semaphore. The semaphore mechanism is very similar to the monitor mechanism provided by SPOX® operating system. There are two major differences: (1) a task within a SPOX® operating system monitor cannot be suspended, even if a higher priority task is ready to run, and (2) when a task within a SPOX® operating system monitor is suspended on a condition, it implicitly releases ownership of all monitors. In the mixer, it is necessary to make calls to routines which may block, such as IO_alloc, while retaining ownership of the critical region. The semaphore is released when a task waits for a mixer-specific condition (otherwise, no other task would be able to enter the mixer to signal the condition), but it is not released when the task blocks on some condition unrelated to the mixer, such as within the SAC.

Echo Suppression Driver

The echo suppression driver (ESP) **1512** is responsible for suppressing echoes prevalent when one or both users use open speakers (rather than headphones) as an audio output device. The purpose of echo suppression is to permit two conferencing systems **100** connected by a digital network to carry on an audio conversation utilizing a particular microphone and a plurality of loudspeaker device choices without having to resort to other measures that limit or eliminate acoustic feedback ("coupling") from loudspeaker to microphone.

Specifically, measures obviated by the ESP include:

- An audio headset or similar device to eliminate acoustic coupling.
- A commercial "speakerphone" attachment that would perform the stated task off the PC and would add cost and complexity to the user.

The ESP takes the form of innovations embedded in the context of an known variously as "half-duplex speakerphones" or "half-duplex hands-free telephony" or "echo suppression." The ESP does not relate to an known as "echo cancellation."

The general ideas of "half-duplex hands-free telephony" are current practice. Electronic hardware (and silicon) exist that embody these ideas. The goal of this technology is to eliminate substantially acoustic coupling from loudspeaker to microphone by arranging that substantial microphone gain is never coincident with substantial speaker power output when users are speaking.

The fundamental idea in current practice is the following: Consider an audio system consisting of a receiving channel connected to a loudspeaker and a transmitting channel connected to a microphone. If both channels are always allowed to conduct sound energy freely from microphone to network and from network to loudspeaker, acoustic coupling can result in which the sound emanating from the loudspeaker is received by the microphone and thus transmitted back to the remote station which produced the original sound. This "echo" effect is annoying to users at best and at worst makes conversation between the two stations impossible. In order to eliminate this effect, it is preferable to place an attenuation device on each audio channel and dynamically control the amount of attenuation that these devices apply by a central logic circuit. This circuit senses when the remote microphone is receiving speech and when the local microphone is receiving speech. When neither channel is carrying speech energy, the logic permits both attenuators to pass audio energy, thus letting both stations receive a certain level of ambient noise from the opposite station. When a user speaks, the logic configures the attenuators such that the microphone energy passes through to the network and the network audio which would otherwise go to the speaker is attenuated (this is the "talk state"). When on the other hand

HUAWEI EX. 1016 - 554/714

speech is being received from the network and the local microphone is not receiving speech, the logic configures the attenuators conversely, such that the network speech is played by the speaker and the microphone's acoustic energy is muted by the attenuator on that channel (this is the "listen state").

The ESP operates without a separate dedicated speakerphone circuit device. The ESP operates over a network featuring an audio codec that is permitted to distort signal energies without affecting the performance of the algorithm. The ESP effectively distributes computational overhead such that redundant signal processing is eliminated.

The ESP is a distributed digital signal processing algorithm. In the following, the algorithm is spoken of as "distributed," meaning that two instantiations of it reside on the two conferencing systems connected by a digital network, and their operation is interdependent). "Frame energy" means a mean sum of the squares of the digitized audio samples within a particular time segment called a "frame."

The instantaneous configuration of the two attenuations is encoded as a single integer variable, and the attenuations are implemented as a fractional multiplier as a computational function of the variable.

In order to classify a signal as speech, the algorithm utilizes a frame energy threshold which is computed as an offset from the mathematical mode of a histogram in which each histogram bin represents the count of frames in a particular energy range. This threshold varies dynamically over time as it is recalculated. There exists a threshold for each of the two audio channels.

Since both stations need access to the threshold established at a particular station (in that one station's transmit stream becomes the other station's receive stream), the threshold is shared to both instantiations of the algorithm as an out-of-band network signal. This obviates the need for both stations to analyze the same signal, and makes the stations immune to any losses or distortion caused by the audio codec.

The energy of a transmitted audio frame is embedded within a field of the communication format which carries the digitally-compressed form of the frame. In this way, the interactive performance of the station pair is immune from any energy distortion or losses involved in the audio codec.

The ESP makes possible hands-free operation for video teleconferencing products. It is well-known that hands-free audio conversation is a much more natural conferencing usage model than that of an audio headset. The user is freed from a mechanical attachment to the PC and can participate as one would at a conference table rather than a telephone call.

Audio Task Interface with Comm Task

The interface between the audio task to the audio hardware is based on SPOX® operating system streams. Unfortunately, SPOX® operating system streams connect tasks to source and sink device drivers, not to each other. Audio data are contained within SPOX® operating system array objects and associated with streams. To avoid unnecessary buffer copies, array objects are passed back and forth between the comm and audio subsystems running on the audio/comm board using SPOX® operating system streams and a pipe driver. The actual pipe driver used will be based on a SPOX® operating system driver called NULLDEV. Like Spectron's version, this driver simply redirects buffers it receives as an IO_SINK to the IO_SOURCE stream; no buffer copying is performed. Unlike Spectron's pipe driver, however, NULLDEV does not block the receiving task if no buffers are available from the sending stream and discards buffers received from the IO_SOURCE stream if no task has made the IO_SINK stream connection to the driver. In addition, NULLDEV will not block or return errors to the sender. If no free buffers are available for exchange with the sender's live buffer, NULLDEV returns a previously queued live buffer. This action simulates a dropped packet condition.

Setup and teardown of these pipes will be managed by a message protocol between the comm task and audio task threads utilizing the existing TMB mailbox architecture built into the Mikado DSP interface.

The interface assumes that the comm task is running, an ISDN connection has been established, and channel ID's (i.e., virtual circuit ID's) have been allocated to the audio subsystem by the conferencing API. The capture and playback threads become the channel handlers for these ID's. The interface requires the comm task first to make available to the audio threads the handle to its local mailbox TMB_MYMBOX. This is the mailbox a task uses to receive messages from the host processor. The mailbox handle is copied to a global memory location and retrieved by the threads using the global data package discussed later in this specification.

Message Protocol

Like the comm task, the audio task threads use their own TMB_MYMBOX mailboxes for receiving messages from the comm task. For the purpose of illustration, the capture thread, playback thread and comm task mailboxes are called TMB_CAPTURE, TMB_PLAYBACK, and TMB_COMMMSG, respectively. The structure of the messages exchanged through these mailboxes is based on TMB_Msg defined in "TMB.H" such that:

```
typedef struct TMB_Msg {
        Int msg;
        Uns words[TMB_MSGLEN];
} TMB_Msg;
```

The messages that define this interface will be described via examples. Currently, specific message structures and constants are defined in the header file "AS.H".

Referring now to FIG. **16**, there is shown a block diagram of the interface between the audio task **538** and the comm task **540** of FIGS. **5** and **13**, according to a preferred embodiment of the present invention. For audio capture, when the capture thread receives an ALinkOutTMsg message from the host processor, it sends an AS_REGCHANHDLR message to the TMB_COMMMSG mailbox. The message contains an on-board channel ID, a handle to the mailbox owned by the capture thread, and a string pointer to the pipe.

```
typedef struct AS_OPENMSG {
        Uns         msg;        /* msg = = AS_REGCHANHDLR. */
        Uns         Channel_ID; /* On board channel ID */
        TMB_MBox    mailbox;    /* Sending Task's mailbox. */
        String      DevName;    /* Device name to open. */
} AS_OPENMSG;
```

Channel_ID is used to retrieve channel specific information. The task stores this information in the global name

HUAWEI EX. 1016 - 555/714

space. A pointer to this space is retrieved via the routine GD_getAddress(ID). The information has the following structure:

```
typedef struct COMM_AUDIO_DATA {
        struct {
                unsigned int                : 30;
                unsigned int    initialized : 1;
                unsigned int    read        : 1;
        } bool;
        Uns     localID;
        Uns     remoteID;
} CommAudioData, *CommAudioDataPtr;
```

This structure is declared in "AS.H". From this structure, the comm task can determine if the buffer is initialized (it always should be or the audio tasks would not be calling), if the task is expecting to read or write data to/from the network (if read is 1, the comm task will open the pipe for write and put data from the network there), and finally the local and remote IDs of the network channels. The following pseudo code illustrates the actions performed by the capture thread to establish a link with the comm task:

```
AS_OPENMSG          *audio;
TMB_Msg             message;
CommAudioDataPtr    pCAData;
pCAData = (CommAudioDataPtr) GD_getAddress(AS_CAPTURE_CHAN)
<set pCAData fields>
audio = (AS_OPENMSG *) &message;
audio->msg = AS_REGCHANHDLR;
audio->Channel_ID = (Uns) AS_CAPTURE_CHAN;
audio->mailbox = (TMB_MBox) TMB_CAPTURE;
audio->DevName = (String) "/null";
TMB_postMessage(TMB_COMMMSG, audio, 0);
```

The comm task's first action will be to call GD_getAddress() and retrieve an address to the CommAudioData structure. It validates the structure using the local and remote IDs linking the thread with the appropriate ISDN channel. Finally, the comm task responds by connecting to its end of audio->DevName ("/null") and returning status to the capture thread via a message directed to TMB_CAPTURE such that:

```
TMB_Msg             message;
CommAudioDataPtr    pCAData;
AS_OPENMSG          audio;
typedef struct AS_INFOMSG {
        Uns     msg;            /* AS_CLOSE_CHAN or AS_STATUS */
        Uns     Channel_ID;     /* On board channel ID */
        Uns     statusCode;     /* Status Code */
        Uns     statusExtra;    /* Additional status info */
} AS_INFOMSG *comm ;
TMB_getMessage (TMB_COMMMSG, (TMB_Msg)&audio, 0);
pCAData= (CommAudioDataPtr) GD_getAddress(audio.Channel_ID);
<validate pCAData fields and open audio. DevName>
comm = (AS_INFOMSG *) &message;
comm->msg = AS_STATUS;
comm->Channel_ID = audio.Channel_ID;
comm->statuscode = AS_REGCHANHDLR_OK;
TMB_postMessage (audio.mailbox, comm, 0);
```

If the comm task detects an error, the statusCode and statusExtra fields are set to the appropriate error codes defined in the section Status and Error Codes.

The capture thread subsequently receives stream buffers filled with time stamped and compressed audio data from the input driver stack via SS_get() calls and routes them to the comm task via the pipe driver. After each SS_put() to the pipe driver, the capture thread notifies the comm task that an incoming buffer is on the way via an AS_RECEIVECOMPLETE status message.

```
audio = (AS_INFOMSG *) &message;
audio->msg = AS_STATUS;
audio->Channel_ID = AS_CAPTURE_CHAN;
audio->statuscode = AS_RECEIVECOMPLETE;
TMB_postMessage (TMB_COMMMSG, audio, 0);
```

The comm task sends the buffers to the ISDN driver which transmits the data frame on the audio output's ISDN virtual channel.

Between each input streams buffer processed, the capture thread checks TMB_CAPTURE for new requests messages from the comm task or the host processor. When a second ALINKOUT_TMSG message is received from the host processor, the capture thread stops sending data buffers to the pipe driver and notifies the comm task of its intention to terminate the link:

```
audio = (AS_INFOMSG *) &message;
audio->msg = AS_CLOSE_CHAN;
audio->Channel_ID = AS_CAPTURE_CHAN;
TMB_postMessage (TMB_COMMMSG, audio, 0);
```

Capture treats the ALINKOUT_TMSG message as a toggle: the first receipt of the message establishes the link, the second receipt terminates it. The comm task first closes its half of the pipe driver and then terminates its connection with the capture thread via an AS_CLOSE_CHAN_OK message.

HUAWEI EX. 1016 - 556/714

```
comm->msg = AS_STATUS;
comm->Channel_ID = Channel_ID;
comm->statuscode = AS_CHANCLOSE_OK;
TMB_postMessage (TMB_CAPTURE, comm, 0);
```

On the other side of the audio task, the playback thread waits for the ALINKIN_TMSG message from the host processor after first opening the IO_SINK side of a second pipe driver "/null2". When that message finally arrives, the playback thread opens the communication pathway to the comm task and registers as the audio input channel handler via an AS_REGCHANHDLR message. Like the capture thread, the playback thread supplies the channel ID, its response mailbox, and a string pointer to the second pipe driver:

```
pCAData = (CommAudioDataPtr) GD_getAddress(AS_PLAYBACK_CHAN)
<set pCAData fields>
audio = (AS_OPENMSG *) &message;
audio->msg = AS_REGCHANHDLR;
audio->Channel_ID = (Uns) AS_PLAYBACK_CHAN;
audio->mailbox = (TMB_MBox) TMB_PLAYBACK;
audio->DevName = (String) "/null2";
TMB_postMessage (TMB_COMMMSG, audio, 0);
```

Exactly as with the capture thread, the comm task behaves as follows:

```
TMB_getMessage (TMB_COMMMSG, (TMB_Msg)&audio, 0);
pCAData = (CommAudioDataPtr) GD_getAddress(audio.Channel_ID);
<validate pCAData fields and open audio. DevName>
comm = (AS_INFOMSG *) &message;
comm->msg = AS_STATUS;
comm->Channel_ID = audio.Channel_ID;
comm->statusCode = AS_REGCHANHDLR_OK;
TMB_postMessage (audio.mailbox, comm, 0);
```

Once this response is received, the playback thread blocks waiting for notification of input buffers delivered by the comm task to its side the pipe driver. After each buffer is put to pipe, the comm task notifies the playback thread:

```
comm = (AS_INFOMSG *) &message;
comm->msg = AS_STATUS;
comm->Channel_ID = Channel_ID;
comm->statusCode = AS_RECEIVECOMPLETE;
TMB_postMessage (TMB_PLAYBACK, comm, 0);
```

The playback thread collects each buffer and outputs the audio data by SS_put()'ing each buffer down the driver stack to the SAC **1304**.

The handing of the second ALINKIN_TMSG request received from the host processor is the same as on the capture side. The playback thread closes "/null2" and uses AS_CLOSE_CHAN to sever its link with the comm task.

At any time during the link state, problems with or a normal shutdown of the ISDN logical channel may generate a hang-up condition. The comm task notifies the capture and/or playback thread via the unsolicited status message AS_COMM_HANGUP_NOTIFY:

```
comm = (AS_INFOMSG *) &message;
comm->msg = AS_STATUS;
comm->Channel_ID = Channel_ID;
comm->statusCode = AS_COMM_HANGUP_NOTIFY;
comm->statusextra = <QMUX error>
TMB_postMessage (<TMB_PLAYBACK or TMS_CAPTURE >, comm, 0);
```

In response, the threads close the channel, notifying the host processor in the process.

As defined in "AS.H", the following are status and error codes for the statusCode field of AS_STATUS messages:

AS_REGCHANHDLR_OK	AS_REGCHANHDLR request succeeded.
AS_REGCHANHDLR_FAIL	AS_REGCHANHDLR request failed.
AS_CHANCLOSE_OK	AS_CHANCLOSE request succeeded.
AS_CHANCLOSE_FAIL	AS_CHANCLOSE request failed.
AS_COMM_HANGUP_NOTIFY	Open channel closed.
AS_RECEIVECOMPLETE	Data packet has been sent to NULLDEV.
AS_LOST_DATA	One or more data packets dropped.

HUAWEI EX. 1016 - 557/714

Regarding buffer management issues, the audio task maintain a dynamically configurable amount of latency on the audio streams. To do this, both audio task threads have control over the size of the buffers that are exchanged with the comm task. As such, the comm task adopts the buffer size for the streams assigned it by the audio task. In addition, the number of buffers which exist within the NULLDEV link between the comm task and an audio task thread are defined by the threads. Mechanisms for implementing this requirement involves the following steps:

1. Both audio task threads create their SPOX® operating system stream connections to the NULLDEV pipe driver before registering with the comm task. Each thread issues an SS_create() specifying the buffer size appropriate for the audio compression method and time stamp framing to be performed on each buffer. In addition, the attrs.nbufs field is set to the desired number of buffers available for queuing audio data within the NULLDEV link.
2. When setting up its NULLDEV streams, the comm task sets the SS_create() buffer-size parameter to −1 specifying that a "device-dependent value will be used for the stream buffer size". See SPECTRON's *SPOX® Application Programming Reference Manual*, Version 1.4, page 173. In addition, the attrs.nbufs are set to **0** ensuring that no additional buffers are added to the NULLDEV link.
3. After opening the stream, the comm task will query for the correct buffer size via an SS_sizeof() call. Thereafter, all buffers it receives from the capture thread and all buffers it delivers to the playback thread are this size. It uses this size when creating the SA_Array object used to receive from and send buffers to NULLDEV.

The comm task preferably performs no buffering of live audio data. Communication between audio task endpoints is unreliable. Because audio data is being captured, transmitted, and played back in real time, it is undesirable to have data blocks retransmitted across an ISDN channel.

Whether unreliable transmission is supported or not for the audio stream, the NULLDEV driver drops data blocks if live buffers back up. NULLDEV does not allow the sender to become buffer starved. It continues to exchange buffers with the task issuing the SS_put(). If no free buffers are available to make the exchange, NULLDEV returns the live buffer waiting at the head of its ready queue.

Global Data Package

The SPOX® operating system image for the audio/comm board contains a package referred to as the Global Data Package. It is a centralized repository for global dam that is shared among tasks. The interfaces to this package are defined in "GD.H". The global data is contained in a GBLDATA struct that is defined as an array of pointers:

```
typedef struct GBLDATA {
        Ptr availableData[MAX_GLOBALS];
} GBLDATA;
```

Like all SPOX® operating system packages, the global data package contains an initialization entry point GD_init() that is called during SPOX® operating system initialization to set the items m GBLDATA to their initial values. Tasks that wish to access the global data will contain statements like the following to obtain the contents of the GBLDATA structure:

```
Ptr pointerToGlobalObject;
pointerToGlobalObject =
GD_getAdress(OBJECT_NUMBER);
```

In a preferred embodiment, there is no monitor or semaphore associated with the global data. So by convention, only one task will write to an item and all others will only read it. For example, all data pointers are set to NULL by GD_init(). A pointer such as availableData[CommMBox] would then be filled in by the comm task during its initialization with the following sequence:

```
pointerToGlobalData= GD_getAddress(AS_COMMMBOX);
pointerToGlobalData->CommMBox= TMB_MYMBOX;
```

Tasks that wish to communicate to the comm task can check that the task is present and obtain its mailbox handle as follows:

```
pointerToGlobalData= GD_getAddress(AS_COMMMBOX);
if (pointerToGlobalData->CommMBox != NULL) {
    /* COMMTASK is present */
    TMB_postMessage ( pointerToGlobalData->CommMBox ,
                      aMessage,
                      timeOutValue);
}
else {
    /* IT IS NOT */
}
```

NULLDEV Driver

The SPOX® operating system image for the audio/board contains a device driver that supports interprocess communication through the stream (SS) package. The number of distinct streams supported by NULLDEV is controlled by a defined constant NBRNULLDEVS in NULLDEV.H. Currently, NULLDEV supports two streams. One is used for the audio task capture thread to communicate with the comm task. The other is used by the playback thread to communicate with the comm task. The assignment of device names to tasks is done by the following two constants in ASTASK.H:

```
#define AS_CAPTURE_PIPE          "/null"
#define AS_PLAYBACK_PIPE         "/null2"
```

Support for additional streams may be obtained by changing the NBRNULLDEVS constant and recompiling NULLDVR.C. The SPOX® operating system config file is also adjusted by adding additional device name strings to this section as follows:

```
driver NULLDEV_driver {
        "/null": devid = 0;
        "/null2": devid = 1;
};
```

The next device is the sequence has devid=2.

SS_get() calls to NULLDEV receive an error if NULLDEV's ready queue is empty. It is possible to SS_put() to a NULLDEV stream that has not been opened for SS_get() on the other end. Data written to the stream in this case is discarded. In other words, input live buffers are simply appended to the free queue. SS_put() never returns an error to the caller. If no buffers exist on the free queue for exchange with the incoming live buffer, NULLDEV removes the buffer at the head of the ready queue and returns it as the free buffer.

Comm Subsystem

The communications (comm) subsystem of conferencing system **100** of FIG. **5** comprises comm API **510**, comm manager **518**, and DSP interface **528** running on host processor **202** of FIG. **2** and comm task **540** running on

HUAWEI EX. 1016 - 558/714

audio/comm board **206**. The comm subsystem provides connectivity functions to the conferencing application programs **502** and **504**. It maintains and manages the session, connection, and the virtual channel states. All the connection control, as well as data communication are done through the communication subsystem.

Referring now to FIG. **17**, there is shown a block diagram of the comm subsystem of conferencing system **100** of FIG. **5**, according to a preferred embodiment of the present invention. The comm subsystem consists of the following layers that reside both on host processor **202** and the audio/comm board **206**:

Transport independent interface (TII.DLL),

Reliable datalink module (DLM.DLL+KPDAPI.DLL, where KPDAPI.DLL is the back-end of the DLM which communicates with the DSP interface), and

Datalink module. TII.DLL and RDLM.DLL reside entirely on the host processor. Datalink module comprises DLM.DLL residing on the host processor, and control (D channel), D channel driver, data comm tasks, and B channel drivers residing on audio/comm board **206**.

The comm interface provides a "transport independent interface" for the conferencing applications. This means that the comm interface hides all the network dependent features of the conferencing system. In a preferred embodiment, conferencing system **100** uses the ISDN Basic Rate Interface (BRI) which provides 2*64 KBits/sec data (B) channels and one signaling (D) channel (2B+D). Alternative preferred embodiment may use alternative transport media such as local area networks (LANs) as the communication network.

Referring now to FIG. **18**, there is shown a block diagram of the comm subsystem architecture for two conferencing systems **100** participating in a conferencing session, according to a preferred embodiment of the present invention. The comm subsystem provides an asynchronous interface between the audio/comm board **206** and the conferencing applications **502** and **504**.

The comm subsystem provide all the software modules that manage the two ISDN B channels. The comm subsystem provides a multiple virtual channel interface for the B channels. Each virtual channel is associated with transmission priority. The data queued for the higher priority channels are transmitted before the data in the lower priority queues. The virtual channels are unidirectional. The conferencing applications open write-only channels. The conferencing applications acquire read-only channels as a result of accepting a open channel request from the peer. The DLM supports the virtual channel interface.

During a conferencing session, the comm subsystem software handles all the multiplexing and inverse multiplexing of virtual channels over the B channels. The number of available B channels (and the fact that there is more than one physical charmel available) is not a concern to the application.

The comm subsystem provides the D channel signaling software to the ISDN audio/comm board. The comm subsystem is responsible for providing the ISDN B charmel device drivers for the ISDN audio/comm board. The comm subsystem provides the ISDN D channel device drivers for the ISDN audio/comm board. The comm software is preferably certifiable in North America (U.S.A., Canada). The signaling software is compatible with NI1, AT&T Custom, and Northern Telecom DMS-100.

The comm subsystem provides an interface by which the conferencing applications can gain access to the communication hardware. The goal of the interface is to hide the implementation of the connectivity mechanism and provide an easy to use interface. This interface provides a very simple (yet functional) set of connection control features, as well as data communication features. The conferencing applications use virtual channels for data communication. Virtual channels are simplex, which means that two virtual channels are open for full duplex communication between peers. Each conferencing application opens its outgoing channel which is write-only. The incoming (read-only) channels are created by "accepting" an "open channel" request from the peer.

qMUX MULTIPLE CHANNEL STREAMING MODULE

The QSource Multiple Channel Streaming Module (qMUX) is based on the need to utilize the high bandwidth of two bearer (B) channels (each at 64 kbps) as a single high-speed channel for the availability of multiple upper layer users. This section specifies the various interfaces between QSource qMUX module and other QSource modules or application modules to achieve this objective.

QSource qMUX is a data link provider for one or more end-to-end connected upper layers to exchange data between themselves at a higher data rate than is possible over a single bearer (B) channel. qMUX accepts messages from upper layer providers and utilizes both B channels to transfer the data. On the receiving end, qMUX will reassemble received buffers from Layer **1** in sequential order into a user message and deliver the message to the awaiting upper layer. There is no data integrity insured by qMUX. There is no Layer **2** protocol (i.e., LAPB) used in the transmission of packets between the two endpoints; however, packets are transmitted using HDLC framing. Throughout this section, the term ULP means Upper Layer Process or qMUX User.

qMUX is a data link provider process that receives user data frames from upper layers (data link user) and equally distributes them over the two B channels. This achieves a higher bandwidth for an upper layer than if a single B channel was used. Several higher processes can be multiplexed through the qMUX process, each being assigned its own logical channel through qMUX. This logical channel is known as a qMUX logical identifier (qLI).

A priority is assigned to each qLI as it is opened. This priority ensures that buffers of higher priority are sent before buffers of lesser priority are transmitted over the B channels. This enables an upper layer, -whose design ensures a smaller bandwidth usage, to be handled in a more timely manner, ensuring a more rapid exchange of data between the two end users.

qMUX is an unreliable means of data transfer between two end users. There is no retransmission of message data. Although received packets are delivered to the higher requesting layers, there is no guarantee of data integrity maintained between the two cooperating qMUX processes. Packets may be lost between the two endpoints because there is no Layer **2** protocol (i.e., LAPB) used in the transmission of packets between the two endpoints; however, packets are transmitted using HDLC framing. In order to provide reliability, a transport provider such as TP0 (modified to work with qMUX) is preferably used as a ULP. qMUX considers a message as one or more data buffers from the higher layer. These chained buffers are unchained, assigned sequence numbers within the message sequence, and transferred to the far end. Each buffer contains a sequence number that reflects its place within the message.

At the receiving end, the buffers are reassembled into messages and delivered to the awaiting upper layer. Message integrity is not guaranteed. Messages are discarded on the receiving end if buffers are not received before final reassembly and delivery.

HUAWEI EX. 1016 - 559/714

All messages transmitted by qMUX are preferably split into an even number of buffers, independent of message size. Two processes, namely SM2 and SCUD, split messages into equal buffers. In an alternative preferred embodiment, messages are split after exceeding a specific size (160 octets). Splitting messages into an even number of buffers, regardless of size, ensures timely delivery of data. In another alternative preferred embodiment, qMUX transmits a message contained in a single buffer.

Upper layers ensure that both endpoints are synchronized on their qLI (logical channel identifier) and priority. Once both B channels are established, the ULP establishes a qMUX logical interface with the qMUX process. This qLI, assigned by the ULP, allows for the transfer of data between qMUX and the ULP. This qLI assignment may be transferred or reassigned to another ULP, by use of the qMUX_BIND_REQUEST primitive. The qLI may be used by only one ULP at a time. The maximum qLI value in a system is defined as a stamp parameter (MAX_LOGICAL_CHANNELS). A ULP requesting a qLI when all of the assignable qLI are in use is denied.

If a message is received for a qLI that is not assigned, then the message is discarded. A received message has the sending qLI and the intended receiver's qLI contained in the message. If the ULP assigned to the qLI does not have an outstanding request to receive data when a message is received, the message is discarded as well.

A qLI of 0 (zero) is used as a control channel for a ULP requesting assignment as a controlling ULP. The controlling qLI may be used to synchronize the two end ULPs cooperating in the data exchange.

When a qLI is requested, the requesting ULP assigns a priority for the handling of messages. Those ULPs requiring a high throughput with very little bandwidth should request a high priority to its messages. Priority is valid for outgoing messages only; that is, the priority is used when the buffer is queued to the B channel driver.

Data transfer between the ULP and qMUX is performed on a message basis. A message is defined to be one or more data buffers containing user data. The buffers are disassembled, assigned sequence numbers, and transferred over the available bandwidth of the two B channels in their assigned priority order, and re-assembled on the far-end for delivery to a requesting ULP. Should a fragment of the message not be delivered, the entire message is discarded; no retransmission of the message or its parts are attempted by qMUX.

End-to-End flow control is not performed by qMUX. Before buffers are queued to layer 1, the queue depth is checked. If the number of buffers on a B-channel queue exceeds 15, the message is discarded, and notification given to the ULP.

qMUX maintains a message window per qLI that effectively buffers incoming messages. This guards against network transit delays that may exist due to the two bearer channels in use. The current size of the message window is three. For example, it is possible for qMUX to have completely assembled message numbers 2 and 3, while waiting for the final part of message 1. When message 1 is completely assembled, all three are then queued, in message order, to the appropriate ULP. If any part of message 4 is received before message 1 is complete, message 1 is discarded and the ULP notified. The message window then slides to include messages 2, 3, and 4. Since messages 2 and 3 are complete, they are forwarded to the ULP and the window slides to message 4. The following primitives are sent from the ULP to qMUX:

qMUX_DATA_REQUEST	Indicates the message carries application data. The message is comprised of one or more QSource system buffers.
qMUX_ATTACH_REQUEST	A request by a ULP for a qLI assignment. Both B channels are assumed to be connected at this time; the state of the two B channels is unaltered. This request can also be used to request a controlling qLI (0) for a ULP.
qMUX_BIND_REQUEST	A request by a ULP to have the specified qLI bound to the requesting ULP. All subsequent received traffic is directed to the requesting ULP.
QMUX_DEATTACH_REQUEST	Used by a ULP to end its usage of a qLI. All subsequent messages received are discarded for this qLI. This is used by a ULP to end the logical connection and reception of data.

The following primitives are sent from qMUX to the ULP:

qMUX_DATA_INDICATION	Indicates that user data is contained in the message. The message is one or more QSource system buffers.
QMUX_OK_ACK	Acknowledges to the ULP that a previously received primitive was received successfully. The qLI is returned within the acknowledgement.
qUMX_ERROR_ACK	Informs the ULP that a previously issued request was invalid. The primitive in error and the associated qLI (if valid) are conveyed back to the ULP.

The following primitives are exchanged between PH (B channel Driver) and qMUX:

PH_DATA_REQUEST	Used to request that the user data contained in the QSource system system buffer be transmitted on the indicated B channel.
PH_DATA_INDICATION	Used to indicate to qMUX that the user data in the QSource system buffer is intended for an ULP. This particular buffer may only be a part of a message.

PH_DATA_REQUEST Used to request that the user data contained in the QSource system buffer be transmitted on the indicated B channel.

PH_DATA_INDICATION Used to indicate to qMUX that the user data in the QSource system buffer is intended for an ULP. This particular buffer may only be a part of a message.

The following example of the usage of qMUX by two cooperating ULPs (referred to as ULP-A and. ULP-B) assumes that a connection has already been established:

HUAWEI EX. 1016 - 560/714

The session manager sends a QMUX_CONNECT_REQ primitive to qMUX that states that both B-channels are available. ULP-A and ULP-B establish both B Channels at their respective ends.

ULP-A issues a qMUX_ATTACH_REQUEST for a controlling qLI to qMUX, and two qMUX_ATTACH_REQUESTs for a data exchange path. The first path is for sending and the second is for receiving data.

ULP-B also issues a qMUX_ATTACH_REQUEST for a controlling qLI (of zero) to qMUX, and two qMUX_ATTACH_REQUESTs for a data exchange path. ULP assigns zero for the controlling qLI requests and qLI **5** and **6** for ULP-A and qLI **5** and **6** for LP-B.

ULP-A formats a peer-to-peer (ULP-A to ULP-B) request for informing ULP-B that messages for ULP-A should be directed over qLI **6**. ULP-A sends the message via qMUX over the controlling qLI.

ULP-B also formats a peer-to-peer (ULP-B to ULP-A) request for informing ULP-A that messages for ULP-B should be directed over qLI **6**. ULP-B sends the message via qMUX, over the controlling qLI.

ULP-A receives the request from ULP-B from the controlling qLI. A response is formatted which gives the qLI for ULP-A as **6** and ULP-B as **6**. It is sent to qMUX for transfer over the controlling qLI.

ULP-B receives the request from ULP-A from the controlling qLI. A response is formatted which gives the qLI for ULP-B as **6** and ULP-A as **6**. It is sent to qMUX for transfer over the controlling qLI.

Once both ULP peers have received the responses to their peer-to- peer requests, they an exchange data.

The following scenario illustrates the interface and design of qMUX for the exchange of data/video/audio:

ULP-A issues a qMUX_DATA_REQUEST over qLI **5** for delivery at the far-end to qLI **6**. The message was segmented into two QSource system buffers by SM2/SCUD and sent to the B channels as follows:

Segment one: marked as START_OF_MESSAGE, sending qLI is **5**, receiving qLI is **6**, sequence number is 1 (one). It is sent to the B channel driver for B channel **1** with a primitive of PH_DATA_REQ.

Segment two: marked as END_OF_MESSAGE, sending qLI is **5**, receiving qLI is **6**, sequence number is 2 (two). It is sent to the B channel driver for B channel **2** with a primitive of PH_DATA_REQ.

qMUX at the receiving end receives the buffers as follows:

Segment one: received from B channel driver on B channel **1**. Buffer has header of START_OF_MESSAGE, sequence number **1**. State is now AWAITING_EOM for qLI **6**.

Segment two: END_OF_MESSAGE received. Buffer is chained to buffer two. Primitive is made qMUX_DATA_INDICATION and sent to the ULP-B who had bound itself to qLI **6**. State is now set to AWAITING_START_OF_MESSAGE.

The above activity occurs during the message window for this qLI. The message window is currently set at three. A message window exists on a qLI basis.

Comm API

Comm API **510** of FIG. **5** provides an interface between conferencing applications **502** and **504** and the comm subsystem. Comm API **510** consists of a transport-independent interface (TII.DLL of FIG. **17**). The TII encapsulates the network driver routines provided to the upper-layer modules (ULMs). Comm API **510** provides the following services and functions:

Initialization Commands

BeginSession: Begins a comm session. Only one "thread" of execution is allowed to begin the comm session for a given media. This thread specified the session handler, which is the focal point of all the connection management events. All connection related events are given to the session handler.

EndSession: Ends a comm session.

Connection Control Commands

MakeConnection: Makes connection to a remote peer. A MakeConnection command sends a connection request to the session handler of the specified "address".

CloseConnection: Closes a connection. This command closes all the open virtual channels and the connection. All the relevant handlers are notified of the events caused by this command.

AcceptConnection: Accepts a peer's request for connection. The session handler of the application which has received a connection request issues this command, if it wants to accept the connection.

RejectConnection: Rejects a peer's request for connection.

Virtual-Channel Management

RegisterChanMgr: Registers the piece of code that will handle channel events. This call establishes a channel manager. The job of channel manager is to field the "open channel" requests from the connected peer.

RegisterChanHandler: Registers the piece of code that will handle data events. The channel handler is notified of the data related events, such as receipt of data and completion of sending of a data buffer.

OpenChannel: Opens a virtual channel for sending data.

AcceptChannel: Accepts a virtual channel for receiving data.

RejectChannel: Rejects the virtual channel request.

CloseChannel: Closes an open channel.

"Data" exchange

SendData: Sends data over a virtual channel.

ReceiveData: Posts buffers for incoming data over a virtual channel. Communications Statistics

GetChanInfo: Returns information about a given channel (e.g., the reliability and priority of the channel).

GetChanStats: Returns statistical information about a given channel (e.g., number of transmissions, receives, errors).

GetTiiStats: Returns statistical information about the current TII channels.

Transport-Independent Interface

Comm API **510** supports calls to three different types of transport-independent interface functions by conferencing applications **502** and **504** to the comm subsystem: connection management functions, data exchange functions, session management, and communications statistics functions. Connection management functions provide the ULM with the ability to establish and manage virtual channels for its peers on the network. Data exchange functions control the exchange of data between conferencing systems over the network. Communications statistics functions provide information about the channels (e.g., reliability, priority, number of errors, number of receives and transmissions). These functions are as follows:

HUAWEI EX. 1016 - 561/714

Connection Management Functions	
RegisterChanMgr	Registers a callback or an application window whose message processing function will handle low-level notifications generated by data channel initialization operations. This function is invoked before any OpenChannel calls are made.
RegisterChanHandler	Registers a callback or an application window whose message processing function will handle low-level notifications generated by data channel input/output (I/O) activities. The channels that are opened will receive CHAN_DATA_SENT, and the accepted channels will receive CHAN_RECV_COMPLTE.
OpenChannel	Requests a sub-channel connection from the peer application. The result of the action is given to the application by invoking the callback routine specified in the RegisterChanHandler. The application must specify an ID for this transaction. This ID is passed to the callback routine or posted in a message. Note: All Connection requests are for establishing connections for sending data. The receive channels are opened as the result of accepting a ConnectChannel request.
AcceptChannel	A peer application can issue AcceptChannel in response to a CHAN_REQUEST (OpenChannel) message that has been received. The result of the AcceptChannel call is a one-way communication sub-channel for receiving data. Incoming data notification will be sent to the callback or window application (via PostMessage) to the ChannelHandler.
RejectChannel	Rejects an OpenChannel request (CHAN_REQUEST message) from the peer.
CloseChannel	Closes a sub-channel that was opened by AcceptChannel or ConnectChannel.
Data Exchange Functions	
SendData	Sends data. Data is normally sent via this mechanism.
ReceiveData	Receives data. Data is normally received through this mechanism. This call is nominally issued in response to a DATA_AVAILABLE message.
Communications Statistics Functions	
GetChanInfo	Returns channel information.
GetChanStats	Returns various statistical information about a channel.
GetTiiStats	Returns various statistical information about a TII channel.

These functions are defined in further detail later in this specification in a section entitled "Data Structures, Functions, and Messages."

In addition, comm API **510** supports three types of messages and callback parameters returned to conferencing applications **502** and **504** from the comm subsystem in response to some of the above-listed functions: session messages, connection messages, and channel messages. Session messages are generated in response to change of state in the session. Connection messages are generated in response to the various connection-related functions.

Message and Callback Parameters

This section describes the parameters that are passed along with the messages generated by the communication functions. The events are categorized as follows:

Connection Events:	Connection-related messages that are sent to the session handler (e.g., connection request, connection accepted, connection closed).
Channel Events:	Channel-related messages that are handled by the channel manager (e.g., channel request, channel accepted, channel closed).
Data Events:	Events related to data communication (e.g., data sent, receive completed). These events are handled by the channel handlers. Each virtual channel has a channel handler.

The following messages are generated in response to the various connection related functions:

HUAWEI EX. 1016 - 562/714

CONN_REQUESTED		
wParam	Connection handle	
lparam	Pointer to incoming connection information structure:	
	{	
	WORD	Session handle
	LPTADDR	Pointer to caller's address
	LPCONN_CHR	Pointer to connection attributes
	}	
CONN_ACCEPTED	Response to MakeConnection or AcceptConnection request.	
wParam	Connection handle	
lparam	Pointer to connection information structure:	
	{	
	DWORD	TransId (specified by user in earlier request)
	LPCONN_CHR	Pointer to connection attributes
	}	
CONN_REJECTED	Response to MakeConnection request.	
wParam	Reason	
lParam	TransId (specified by application in earlier request)	
CONN_TIMEOUT	Response to MakeConnection request).	
lParam	TransId (specified by application in earlier request)	
CONN_ERROR	Indication of connection closed due to fatal error.	
wParam	Connection handle	
lParam	Error	
CONN_CLOSED	Indication of remote Close.	
wParam	Connection handle	
CONN_CLOSE_RESP	Response to CloseConnection request.	
wparam	Connection handle	
lParam	TransId (specified by application in earlier Close request)	
SESS_CLOSED	Response to EndSession request.	
wParam	Session handle	

Channel Manager Messages

The following messages are generated in response to the various channel management functions as described with the function definitions:

CHAN_REQUESTED	Indication of remote OpenChannel request.	
wparam	Channel handle	
lparam	Pointer to Channel Request information structure:	
	{	
	DWORD	TransId (to be preserved in Accept/RejectChannel)
	HCONN	Connection handle
	LPCHAN_INFO	Pointer to CHAN_INFO passed by remote application
	}	
CHAN_ACCEPTED	Response to OpenChannel request.	
wParam	Channel handle	
lParam	TransID specified by application in OpenChannel request	
CHAN_REJECTED	Response to OpenChannel request.	
lParam	TransID specified by application in OpenChannel request	
CHAN_CLOSED	Indication of remote CloseChannel.	
wParam	Channel handle	
CHAN_CLOSE_RESP	Response to CloseChannel request.	
wParam	Channel handle	
lParam	TransID specified by application in CloseChannel	

Channel Handler Messages

The following messages are generated in response to the various channel I/0 functions as described with the function definitions:

HUAWEI EX. 1016 - 563/714

CHAN_DATA_SENT	Response to SendData.
wParam	Actual bytes sent
lParam	TransID specified by application in SendData
CHAN_RCV_COMPLETE	Response to ReceiveData.
wParam	Actual bytes received
lParam	TransID specified by application in ReceiveData
CHAN_DATA_LOST	
wParam	Bytes discarded
lParam	TransID specified by application

Data Structures

The following are the important data structures for the comm subsystem:

TADDR, LPTADDR:	Address structure for caller/callee.
CHAN_INFO, LPCHAN_INFO:	Channel information structure.
CONN_CHR, LPCONN_CHR:	Connection Attributes structure.

The comm subsystem provides two different methods of event notification to the conferencing applications: Microsoft® Windows messages and callbacks. A conferencing application program instructs the comm subsystem as to which method should be used for notification of different events. Microsoft® Windows messages employ the Microsoft® Windows messaging mechanism to notify the conferencing application that an event has occurred. For callbacks, the comm subsystem calls a user procedure when an event has taken place. There are restrictions on what the conferencing application may or may not do within a callback routine.

Referring now to FIG. **19**, there is shown a representation of the comm subsystem application finite state machine (FSM) for a conferencing session between a local conferencing system (i.e., local site or caller) and a remote conferencing system (i.e., remote site or callee), according to a preferred embodiment of the present invention. The possible application states are as follows:

INIT	Initial or null state
IN_SESSION	Conferencing session begun
CONN_IN	Incoming connection request received from remote site
CONN_OUT	Outgoing connection request made to remote site
CONNCTED	Connection accepted (by local site for incoming connection and by remote site for outgoing connection)
CHAN_IN	Incoming channel request received from remote site
CHAN_OUT	Outgoing channel request made to remote site
RECEIVE	Incoming channel accepted by local site
SEND	Outgoing channel accepted by remote site

Referring now to FIG. **20**, there is shown a representation of the comm subsystem connections FSM for a conferencing session between a local site and a remote site, according to a preferred embodiment of the present invention. The possible connection states are as follows:

NULL	Null state
IDLE	Idle state
AWAIT_LOCAL_RESP	Awaiting response from local site
AWAIT_ACCEPT_RESP	Awaiting acceptance response
AWAIT_REMOTE_RESP	Awaiting response from remote site
ALIVE	Connection is alive

-continued

ESTABLISHED	Connection is established

Referring now to FIG. **21**, there is shown a representation of the comm subsystem control channel handshake FSM for a conferencing session between a local site and a remote site, according to a preferred embodiment of the present invention. The possible control channel handshake states are as follows:

NULL	Null state
AWAIT_CTL_OPEN	Awaiting opening of control channel 0
AWAIT_ALIVE_MESSAGE	Awaiting message that control channel is alive
CTL_ESTABLISHED	Control channel established

Referring now to FIG. **22**, there is shown a representation of the comm subsystem channel establishment FSM for a conferencing session between a local site and a remote site, according to a preferred embodiment of the present invention. The possible channel establishment states are as follows:

HUAWEI EX. 1016 - 564/714

NULL	Null state
IDLE	Idle state
CHAN_AWAIT_DLM_OPN_RX	Awaiting DLM to open receive channel
AWAIT_LOCAL_RESP	Awaiting local application response to request to open receive channel
CHAN_RECEIVING	Receive channel open
CHAN_AWAIT_DLM_OPN_TX	Awaiting DLM to open send channel
AWAIT_REM_RESP	Awaiting remote application response to request to open send channel
CHAN_SENDING	Send channel open

Referring now to FIG. **23**, there is shown a representation of the comm system processing for a typical conferencing session between a caller and a callee, according to a preferred embodiment of the present invention. Both the caller and callee call the BeginSession function to begin the conferencing session. The caller then calls the MakeConnection function to initiate a connection to the callee, which causes a ConnectRequest message to be sent to the callee. The callee responds by calling the AcceptConnection function, which causes a ConnectAccept message to be sent to the caller and the callee.

Both the caller and callee then call the RegisterChanMan function to register the channel. Both the caller and callee then call the OpenChannel function to open a channel to the other, which causes ChannelRequest messages to be exchanged between the caller and callee. Both the caller and callee call the AcceptChannel function to accept the channel requested by the other, which causes ChannelAccepted messages to be exchanged between the caller and callee. Both the caller and callee call the RegisterChanHandler function two times to register both the incoming and outgoing channels.

The callee calls the ReceiveData function to be ready to receive data from the caller. The caller then calls the SendData function, which causes conferencing data to be sent to the callee. The caller receives a locally generated DataSent message with the sending of the data is complete. The callee receives a ReceiveComplete message when the receipt of the data is complete. Note that the caller does not receive a message back from the callee that the data was successfully received by the callee.

The scenario of FIG. **23** is just one possible scenario. Those skilled in the art will understand that other scenarios may be constructed using other function calls and state transitions.

Comm Manager

The comm manager **518** of FIG. **5** comprises three dynamically linked libraries of FIG. **17**: transport independent interface (TII), reliable datalink module (RDLM.DLL) and datalink module interface (DLM.DLL). The DLM interface is used by the TII to access the services of the ISDN audio/comm board **206**. Other modules (i.e., KPDAPI.DLL and DSP.DRV) function as the interface to the audio/comm board and have no other function (i.e., they provide means of communication between the host processor portion of the DLM and the audio/comm portion of the DLM. The host processor portion of the DLM (i.e., DLM.DLL) uses the DSP interface **528** of FIG. **5** (under Microsoft® Windows 3.x) to communicate with the ISDN audio/comm board side portions. The DLM interface and functionality must adhere to the DLM specification document.

The TII provides the ability to specify whether or not a virtual channel is reliable. For reliable channels, TII employs the RDLM to provide reliability on a virtual channel. This feature is used to indicate that the audio and video virtual channels are unreliable, and the data virtual channel is reliable.

Data Link Manager

The DLM subsystem maintains multiple channels between the clients and supports data transfers up to 64K per user message. The upper layer using DLM assumes that message boundaries are preserved (i.e., user packets are not merged or fragmented when delivered to the upper layer at the remote end).

Before data can be transferred via DLM, the two communicating machines each establish sessions and a connection is set up between them. This section details the functions used to establish sessions and connections. DLM provides the following functions for call control:

DLM_BeginSession

DLM_EndSession

DLM_Listen

DLM_MakeConnection

DLM_AcceptConnection

DLM_RejectConnection

DLM_CloseConnection The following calls should be allowed in an interrupt context: DLM_MakeConnection, DLM_AcceptConnection, DLM_RejectConnection, and DLM_CloseConnection. These functions may generate the following callbacks to the session callback handler, described below.

CONN_REQUESTED

CONN_ESTABLISHED

CONN_REJECTED

CONN_CLOSE COMPLETE

CONN_CLOSE NOTIFY

SESS_CLOSED

SESS_ERROR

CONN_ERROR

Most of the session and connection management functions of the DLM are asynchronous. They initiate an action and when that action is complete, DLM will call back to the user via the session callback. The calling convention for the callback is as follows:

HUAWEI EX. 1016 - 565/714

void FAR PASCAL ConnectionCallback (LPEVENTSTRUCT Event);
Event is a far pointer to a structure:

```
struct EVENTSTRUCT
{
    WORD        EventType;
    WORD        Status;
    BYTE        DlmId;
    BYTE        MdmId;
    DWORD       DlmSessionId;
    DWORD       DlmConnId;
    DWORD       Token;
    LPTADDR     Addr;
    LPCONNCHR   Characteristics;
}
```

where:

EventType	Specifies the type of event which triggered the callback.
Status	Indicates the status of the event.
DlmId	Unique ID of the DLM performing the callback. (Equals 0 for DGM&S.)
MdmId	Unique ID of the MDM that processed the event. (Equals 0 for DGM&S.)
DlmSessionId	Indicates the Session ID, assigned by DLM, on which this event occurred. (Equals 0 for DGM&S.)
DlmConnId	Indicates the Connection Id, assigned by DLM, on which this event occurred. (Equals 0 for DGM&S.)
Token	The token value was given in the call to initiate an action. When the callback notifies the user that the action is complete, the token is returned in this field.
Addr	Specifies the LPTADDR of the caller.
Characteristics	This field is a LPCONNCHR to the connection characteristics.

For each function defined below which generates a callback, all of the fields of the DLM event structure are listed. If a particular field contains a valid value during a callback, an X is placed in the table for the callback. Some fields are only optionally returned by the DLM (and underlying MDMs). Optional fields are noted with an 'O' in the tables. If a pointer field is not valid or optionally not returned the DLM will pass a NULL pointer in its place. The upper layer should not assume that pointer parameters such as LPEVENTSTRUCT, LPTADDR, and LPCONNCHR are in static memory. If the upper layer needs to process them in a context other than the callback context it should make a private copy of the data.

HUAWEI EX. 1016 - 566/714

Status	Indicates the status of the event.
DlmId	Unique ID of the DLM performing the callback. (Equals 0 for DGM&S.)
MdmId	Unique ID of the MDM that processed the event. (Equals 0 for DGM&S.)
DlmSessionId	Indicates the Session ID, assigned by DLM, on which this event occurred. (Equals 0 for DGM&S.)
DlmConnId	Indicates the Connection Id, assigned by DLM, on which this event occurred. (Equals 0 for DGM&S.)
Token	The token value was given in the call to initiate an action. When the callback notifies the user that the action is complete, the token is returned in this field.
Addr	Specifies the LPTADDR of the caller.
Characteristics	This field is a LPCONNCHR to the connection characteristics.

For each function defined below which generates a callback, all of the fields of the DLM event structure are listed. If a particular field contains a valid value during a callback, an X is placed in the table for the callback. Some fields are only optionally returned by the DLM (and underlying MDMs). Optional fields are noted with an 'O' in the tables. If a pointer field is not valid or optionally not returned the DLM will pass a NULL pointer in its place. The upper layer should not assume that pointer parameters such as LPEVENTSTRUCT, LPTADDR, and LPCONNCHR are in static memory. If the upper layer needs to process them in a context other than the callback context it should make a private copy of the data.

DLM_BeginSession: Prepares DLM for subsequent connection establishment. It is done at both ends before a connection is made or accepted.

HUAWEI EX. 1016 - 567/714

```
WORD DLM_BeginSession(BYTE     DlmId,
                      BYTE     MdmId,
                      LPTADDR  LocalAddress
                      FARPROC  SessionCallback,
                      LPDWORD  lpDlmSessionId);
```

Parameters:

DlmId: Global identifier of the DLM that is to be used.(= 0 for DGM&S)

MdmId: Global identifier of the MDM that is to be used.(= 0 for DGM&S)

LocalAddress Far Pointer to a TADDR at which the local connection will be made. This may not be relevant for DLMs such as DGM&S.

SessionCallback Callback function for the session responses.

lpDlmSessionId Output parameter, the session ID allocated. (DGM&S will return a Session Id = 0). Only a single session need be supported by DGM&S.

Return Value: Status Indication
E_NOSESSION Session could not be opened.
E_IDERR DlmID parameter does not match the DLM ID of the called library.

Local Callbacks:
None

Peer Callbacks:
None

This function does not perform a listen. Session IDs are unique across all DLMs. Uniqueness is guaranteed.

DLM_EndSession: Ends the specified session at the given address. Any outstanding connections and/or channels on the session and their callbacks are completed before the local SESS_CLOSED callback.

```
WORD  DLM_EndSession (DWORD DlmSessionId);
```

Parameters:
DlmSessionId: Session identifier returned in DLM_BeginSession

Return Value: Status Indication
E_SESSNUM DlmSessionID is not valid.
E_SESSUNUSED Session is not in use.

HUAWEI EX. 1016 - 568/714

```
E_SESSCLOSED    Session has been closed.
E_SESSNOTOPEN   Session is not open.
E_IDERR         Session is not active on this DLM.

Local Callbacks:
SESS_CLOSED

Event Parameter      SESS_CLOSED
EventType                 X
Status                    X
DlmId                     X
MdmId                     X
DLMSessionId              X
DLMConnId
Token
Addr
Characteristics

Peer Callbacks:
     NONE
```

DLM_Listen: Initiates a listen on the specified connection. When an incoming connection request arrives, asynchronous notification is done to the Session callback function. The Listen stays in effect until DLM_EndSession is performed.

```
WORD DLM_Listen (DWORD     DlmSessionId,
                 LPCONNCHR Characteristics);

Parameters:
DlmSessionID         Session identifier returned in
                     DLM_BeginSession.
Characteristics      Desired characteristics of an incoming
                     connection.  Passed uninterpreted to the
                     lower layers.

Return Value:  Status indication
E_SESSNUM      DlmSessionID is not valid.
E_SESSUNUSED   Session is not in use.
E_SESSCLOSED   Session has been closed.
E_SESSNOTOPEN  Session is not open.
E_IDERR        Session is not active on this DLM.

Local Callbacks:
     CONN_REQUESTED
```

HUAWEI EX. 1016 - 569/714

Event Parameter	CONN_REQUESTED
EventType	X
Status	X
DlmId	X
MdmId	X
DLMSessionId	X
DLMConnId	X
Token	
Addr	X
Characteristics	X

Peer Callbacks:
None

DLM_MakeConnection: Makes a connection to the specified address. It generates a callback when the connection is complete which provides the DLM connection ID to be used in all further operations on this connection. Connection IDs are unique across all DLMs. Uniqueness is guaranteed. (DGM&S support a single connection, with a Connection Id = 0).

```
WORD DLM_MakeConnection (DWORD     DlmSessionId,
                         LPCONNCHR Characteristics,
                         DWORD     Token,
                         LPTADDR   RemoteAddress);
```

Parameters:

DlmSessionID:	Session identifier returned in DLM_BeginSession,
Characteristics	Desired characteristics of the connection. Passed uninterpreted to the lower layers.
Token	Uninterpreted token returned to the upper layer in the response callback.
RemoteAddress	Address on the remote site on which to make the connection.

Return Value:	Status Indication
E_SESSNUM	DlmSessionID is not valid.
E_SESSUNUSED	Session is not in use.
E_SESSCLOSED	Session has been closed.
E_SESSNOTOPEN	Session is not open.
E_IDERR	Session is not active on this DLM.
E_NOCONN	Unable to allocate local connection.

Local Callbacks:
CONN_ESTABLISHED
CONN_REJECTED

HUAWEI EX. 1016 - 570/714

Event Parameter	CONN_REJECTED	CONN_ESTABLISHED
EventType	X	X
Status	X	X
DlmId	X	X
MdmId	X	X
DLMSessionId	X	X
DLMConnId		X
Token	X	X
Addr		O
Characteristics		X

Peer Callbacks:
CONN_REQUESTED Satisfies a previous DLM_Listen on this address.

Event Parameter	CONN_REQUESTED
EventType	X
Status	X
DlmId	X
MdmId	X
DLMSessionId	X
DLMConnId	X
Token	
Addr	X
Characteristics	X

DLM_AcceptConnection: Accepts an incoming connection request.

```
WORD DLM_AcceptConnection(DWORD DlmConnID,
                          DWORD Token);
```

Parameters:

DlmConnID:	Connection identifier returned previously in the CONN_REQESTED callback.
Token	Uninterpreted DWORD returned to the caller in the CONN_ESTABLISHED response callback.

Return Value:	Status Indication
E_SESSNUM	ConnID is not valid.
E_SESSUNUSED	Session is not in use.
E_SESSNOTOPEN	Session is not open.
E_IDERR	ConnID does not refer to a connection on this DLM.
E_CONNNUM	ConnID is not valid.
E_CONNUNUSED	Connection is not in use.
E_CONNSTATE	Connection has been closed or is already open.

Local Callbacks:
CONN_ESTABLISHED

HUAWEI EX. 1016 - 571/714

Event Parameter	CONN_ESTABLISHED
EventType	X
Status	X
DlmId	X
MdmId	X
DLMSessionId	X
DLMConnId	X
Token	X
Addr	O
Characteristics	X

Peer Callbacks:
CONN_ESTABLISHED Satisfies a previous DLM_MakeConnection on this address.

Event Parameter	CONN_ESTABLISHED
EventType	X
Status	X
DlmId	X
MdmId	X
DLMSessionId	X
DLMConnId	X
Token	X
Addr	O
Characteristics	X

DLM_RejectConnection: Rejects an incoming connection request. It returns a WORD status.

```
WORD DLM_RejectConnection(DWORD DlmConnId);
```

Parameters:
DlmConnID: Connection identifier returned in the CONN_REQESTED callback.

Return Value:	Status Indication
E_SESSNUM	ConnID is not valid.
E_SESSUNUSED	Session is not in use.
E_SESSNOTOPEN	Session is not open.
E_IDERR	ConnID does not refer to a connection on this DLM.
E_CONNNUM	ConnID is not valid.
E_CONNUNUSED	Connection is not in use.
E_CONNSTATE	Connection has been closed or is already open.

Local Callbacks:
None

Peer Callbacks:
CONN_REJECTED Satisfies a previous DLM_MakeConnection on this address.

HUAWEI EX. 1016 - 572/714

Event Parameter	CONN_REJECTED
EventType	X
Status	X
DlmId	X
MdmId	X
DLMSessionId	X
DLMConnId	
Token	X
Addr	
Characteristics	

DLM_CloseConnection: Tears down an established connection. This call is allowed only for connections that are established.

```
WORD DLM_CloseConnection(DWORD DlmConnId,
                         DWORD Token);
```

Parameters:

DlmConnID:	Connection identifier returned in the CONN_ESTABLISHED callback or through a call to DLM_MakeConnection.
Token	Uninterpreted value returned to the upper layer in the response callback.

Return Value:	Status Indication
E_SESSNUM	ConnID is not valid.
E_SESSUNUSED	Session is not in use.
E_SESSNOTOPEN2	Session is not open.
E_IDERR	ConnID does not refer to a connection on this DLM.
E_CONNNUM	ConnID is not valid.
E_CONNUNUSED	Connection is not in use.
E_CONNCLOSED	Connection has been closed already.

Local Callbacks:
CONN_CLOSE_COMPLETE

Event Parameter	CONN_CLOSE_COMPLETE
EventType	X
Status	X
DlmId	X
MdmId	X
DLMSessionId	X
DLMConnId	X
Token	X
Addr	
Characteristics	

Peer Callbacks:
CONN_CLOSE_NOTIFY

HUAWEI EX. 1016 - 573/714

Event Parameter	CONN_CLOSE_NOTIFY
EventType	X
Status	X
DlmId	X
MdmId	X
DLMSessionId	X
DLMConnId	X
Token	
Addr	
Characteristics	

Referring now to Fig. 29, there are shown diagrams indicating typical connection setup and teardown sequences.

Interfaces - Channel Management & Data Transfer

Once connections are established between two machines, DLM will provide the user with multiple logical channels on the connections. This section details the functions and callbacks used to set up, tear down, and send data on channels. DLM has the following entry points for channel management and data transfer.

DLM_Open
DLM_Send
DLM_PostBuffer
DLM_Close
DLM_GetCharacteristics

Each of these functions is callable from an interrupt or callback context. These functions generate callbacks into the user's code for completion of a send operation, receipt of data, and events occurring on a given channel. These callbacks are described and their profiles given a later section of this specification.

HUAWEI EX. 1016 - 574/714

Referring now to FIG. 29, there are shown diagrams indicating typical connection setup and teardown sequences.

Interfaces - Channel Management & Data Transfer

Once connections are established between two machines, DLM will provide the user with multiple logical channels on the connections. This section details the functions and callbacks used to set up, tear down, and send data on channels. DLM has the following entry points for channel management and data transfer.

DLM_Open
DLM_Send
DLM_PostBuffer
DLM_Close
DLM_GetCharacteristics

Each of these functions is callable from an interrupt or callback context. These functions generate callbacks into the user's code for completion of a send operation, receipt of data, and events occurring on a given channel. These callbacks are described and their profiles given a later section of this specification.

DLM_Open	Initializes a new data channel for a connection. It does not communicate with the remote site. Its role is simply to declare the channel identifier to the DLM so that incoming and outgoing packets can then use the given channel.
WORD DLM_Open(DWORD ConnID,	
	BYTE ChannelID,
	LPCHANCHR Characteristics,
	FARPROC EventCallback,
	FARPROC ReceiveCallback,
	FARPROC SendCallback)
Parameters:	
ConnID:	Connection on which to open the channel.
ChannelID	Identifier of the channel to open, between 0 and N where N is implementation defined. The value of 255 is reserved to indicate an unknown or invalid channel in callback functions.
Characteristics	Desired characteristics of the channel.
EventCallback	Callback function for events occurring on this channel. (This includes all events except for data received and send complete)
ReceiveCallback	Callback function for data reception on this channel.
SendCallback	Callback function for data sent on this channel.
Return Value:	Status Indication
E_NOCHAN	Unable to allocate channel ID or ID already in use.
E_SESSNUM	ConnID is not valid.
E_SESSUNUSED	Session is not in use.
E_SESSCLOSED	Session has been closed.
E_SESSNOTOPEN	Session is not open.
E_IDERR	ConnID does not refer to a connection on this DLM.
E_CONNNUM	ConnID is not valid.
E_CONNUNUSED	Connection is not in use.
E_CONNCLOSED	Connection has been closed.
E_CONNNOTOPEN	Connection is not currently open.
Local Callbacks:	
CHANNELOPEN	callback to the event callback for this channel.
DLM_Send	Entry point for sending data via the DLM.
WORD DLM_Send(DWORD ConnID,	
	BYTE FAR *Buffer,
	WORD BufferSize,
	BYTE OriginatingChannel,
	BYTE ReceivingChannel,
	DWORD CallerToken)
Parameters:	
ConnID:	Connection to use.
Buffer	Far pointer to the user buffer to send.
BufferSize	Number of bytes in the user buffer.
OriginatingChannel	Local channel on which to send the data.
ReceivingChannel	Channel ID from the remote machine which receives the data.
CallerToken	Token which will be returned to the user in the send complete callback for this buffer.
Return Value:	Status Indication
E_NOCHAN	Originating channel is not valid or is closed.
E_SESSNUM	ConnID is not valid.
E_SESSUNUSED	Session is not in use.
E_SESSCLOSED	Session has been closed.
E_SESSNOTOPEN	Session is not open.
E_IDERR	ConnID does not refer to a connection on this DLM.
E_CONNNUM	ConnID is not valid.
E_CONNUNUSED	Connection is not in use.
E_CONNCLOSED	Connection has been closed.
E_CONNNOTOPEN	Connection is not currently open.

HUAWEI EX. 1016 - 575/714

-continued

E_CHANNUM	Originating channel ID is not valid.
E_CHANUNUSED	originating channel is not in use.
E_CHANCLOSED	Originating channel is closed.
E_NOMEM	Unable to allocate enough memory to perform the send.
E_INTERNAL	An internal error has occurred within the DLM.

Local Callbacks:
Callback to the send complete function for this channel when this buffer is posted to the net.

The return value of DLM_Send specifies the synchronous status of the send. If it indicates success, the request has been accepted to be sent on the network for this channel and at some time the send complete callback will be activated for this buffer. Between the call to DLM_Send and the send complete callback, the user must not change the contents of the buffer. When the callback occurs, DLM is finished with the buffer and the user is free to alter it in any fashion. The DLM does not guarantee that the call to DLM_Send completes before the send complete callback occurs. If the synchronous status indicates that the send operation has failed, the send complete callback will not be activated for this buffer and the buffer is immediately available for modification by the user.

DLM_PostBuffer	Supplies buffers to DLM in which to place incoming data.
WORD DLM_PostBuffer(DWORD ConnID, BYTE FAR *Buffer, WORD BufferSize, BYTE ChannelID, DWORD CallerToken)	
Parameters:	
ConnID:	Connection to use.
Buffer	Far pointer to the user buffer to use.
BufferSize	Size of the user buffer in bytes.
ChannelID	Local channel to use this buffer for.
CallerToken	Token which will be returned to the user in the data receive callback for this buffer.
Return Value:	Status Indication
E_NOCHAN	ChannelID is not valid or is closed.
E_SESSNUM	ConnID is not valid.
E_SESSUNUSED	Session is not in use.
E_SESSCLOSED	Session has been closed.
E_SESSNOTOPEN	Session is not open.
E_IDERR	ConnID does not refer to a connection on this DLM.
E_CONNNUM	ConnID is not valid.
E_CONNUNUSED	Connection is not in use.
E_CONNCLOSED	Connection has been closed.
E_CONNNOTOPEN	Connection is not currently open.
E_CHANNUM	ChannelID is not valid.
E_CHANUNUSED	Channel is not in use.
E_CHANCLOSED	Channel is closed.
E_NOMEM	Unable to allocate enough memory to store the buffer.
E_INTERNAL	An internal error has occurred within the DLM.

Local Callbacks:
Callback to the data receive function for this channel when DLM loads the user buffer with incoming data.

The return value is a word indicating the status of the operation. If it indicates success, the buffer has been enqueued for the given channel and will be used for incoming data. If it indicates failure, a receive callback will never occur for this buffer. DLM preserves the order of buffers on data receives. Provided that no errors occur, the first buffer posted will be the first one used for data, the second one will be the second used, etc.

HUAWEI EX. 1016 - 576/714

DLM_Close	Used to close a previously opened channel.
WORD DLM Close(WORD ConnID, BYTE Channel)	
Parameters:	
ConnID:	Connection on which to close the channel.
Channel	Local channel to close.
Return Value:	Status Indication
E_SESSNUM	ConnID is not valid.
E_SESSUNUSED	Session is not in use.
E_SESSCLOSED	Session has been closed.
E_SESSNOTOPEN	Session is not open.
E_IDERR	ConnID does not refer to a connection on this DLM.
E_CONNNUM	ConnID is not valid.
E_CONNUNUSED	Connection is not in use.
E_CONNCLOSED	Connection has been closed.
E_CONNNOTOPEN	Connection is not currently open.
E_CHANNUM	Channel is not valid.
E_CHANUNUSED	Channel is not in use.
E_CHANCLOSED	Channel is already closed.
Local Callbacks:	
Callback to the event callback function for this channel with the CHANNELCLOSED event after the close has completed.	

The function DLM_Close shuts down a given channel. All future references to this channel are considered invalid. It performs a forced shutdown in that the callback functions for all pending sends and receives are immediately activated with a status value indicating that a close occurred. DLM does not guarantee that the call to DLM_Close will return before the callback is activated.

DLM_GetCharacteristics	Gets relevant data about the DLM (a synchronous call).
WORD DLM_GetCharacteristics(LPCHMSTRUCT Characteristics)	
Parameters:	
LPCHARSTRUCT	Far pointer to the characteristics structure to be filled by this call.
Local Callbacks:	
None	

Send Callback

The send complete callback is activated whenever data has been extracted from a user's buffer and enqueued for transmission. It is not a guarantee that the data has actually been delivered to the remote site. The entry point for the send complete callback is defined SendCallback parameter to DLM_Open. This is a far pointer to a far pascal function defined as follows.

void FAR PASCAL SendCallback(DWORD ConnID, BYTE FAR *BufferSent, WORD ByteCount, BYTE OriginatingChannel, BYTE ReceivingChannel, DWORD Token, WORD StatusOfSend)	
Parameters:	
ConnID:	Connection on which data was sent.
Buffer	Far pointer to the user buffer sent.
BufferSize	Number of bytes sent to the network.
OriginatingChannel	Local channel on which to the data was sent.
ReceivingChannel	Channel ID from the remote machine which will receive the data.
CallerToken	Token which was given in the call to DLM_Send for this buffer.

Data Receive Callback

The data receive callback is activated when data has arrived on the network for a particular channel. The entry point for the data receive callback is defined in the Receive-Callback parameter to DLM_Open, described below. It must be a far pointer to a far pascal function defined as follows:

void FAR PASCAL ReceiveCallback(DWORD ConnID, BYTE FAR *BufferReceived, WORD ByteCount, BYTE OriginatingChannel, BYTE ReceivingChannel DWORD Token, WORD StatusOfReceive)	
Parameters:	
ConnID:	Connection on which the data was received.
BufferReceived	The user supplied buffer that was received.
ByteCount	The number of bytes received.
OriginatingChannel	Channel identifier of the channel on the remote machine which sent the data.
ReceivingChannel	Channel identifier on the local machine that received the data.
Token	Token value that was given in DLM_PostBuffer when this buffer was posted to DLM.
StatusOfReceive	Status of the operation.
The StatusOfReceive parameter can be any of the following values:	
E_OK	Indicates that the receive succeeded.
E_TOOSMALL	Indicates that the beginning of a data packet has

HUAWEI EX. 1016 - 577/714

-continued

	arrived and the given buffer was enqueued but it is too small to contain the entire data packet.
E_CLOSED	Indicates that the buffer was in the receive queue when the channel on the local machine was closed.
E_DATADROP	Indicates that a data packet has arrived and there is no buffer in the queue for the receiving channel.
E_PARTIAL	Indicates that part of a data packet has been dropped, either by the network or by internal memory limitations of the MDM or DLM. The buffer represents everything received up to the dropped data.

The state of the parameters depends on the status of the operation. The table below lists all possible status values correlating them with the values returned in the other parameters, and entry of Valid indicates that this parameter contains meaningful data. The connection ID is always valid.

Status	Buffer	ByteCount	Original Channel	Receiving Channel	Token
E_OK	Valid	Valid	Valid	Valid	Valid
E_TOOSMALL	Valid			Valid	Valid
E_CLOSED	Valid			Valid	Valid
E_DATADROP	NULL		Valid	Valid	
E_PARTIAL	Valid	Valid	Valid	Valid	Valid

When errors E_TOOSMALL, E_DATADROP or E_PARTIAL are returned the upper layer may not depend on the contents of the returned data buffer.

EventCallback	Activated when an action completes for a given channel. The entry point for the channel event callback is defined in the EventCallback parameter to DLM_Open. It is a far pointer to a far pascal function defined as follows.
void FAR PASCAL EventCallback(DWORD ConnID, BYTE Channel, WORD Event, WORD Status)	
Parameters:	
ConnID:	Connection on which the event occurred.
Channel	Channel on which the event occurred.
Event	The type of the event
Status	Status of the operation.
The event may be any of the following values.	
CHANNEL_OPEN	The given channel has been opened and is now available for data transfer.
CHANNEL_CLOSED	The given channel has been closed.

DSP Interface

The ISDN comm task **540** of FIG. **5** which run on the ISDN audio/comm board **206** of FIG. **2** communicate with the host processor **202** via the DSP interface **528**. The host processor operates under Microsoft® Windows 3.x environment.

Comm Task

The comm task **540** of FIG. **5** communicates with the audio task **538** on the ISDN audio/comm board **206**. The channel ID of the audio virtual channel is accessible to both the host processor and the audio/comm board. The model is as follows:

A channel is opened by the host processor or an open channel request is granted by the host processor.

The host processor signals the audio task on the audio/comm board that a channel is accepted/opened on its behalf.

The audio task on the audio/comm board notifies the comm task that all incoming (if the channel was accepted) or outgoing (if the channel was opened) will be handled by the on-board audio task.

Application-Level Protocols

The application-level protocols for conferencing system **100** of FIG. **5** are divided into those for the video, audio, and data streams.

Video Protocol

Referring now to FIG. **24**, there is shown a representation of the structure of a video packet as sent to or received from the comm subsystem, according to a preferred embodiment of the present invention. Source video is video that is captured (and optionally monitored) on the local conferencing system and sent to the comm subsystem for transmission

HUAWEI EX. 1016 - 578/714

to a remote system. Sink video is video that is captured remotely, received from the comm subsystem, and played back on the local system. The first ten fields (i.e., those from lpData through dwReserved[3]) are defined by Microsoft® as the VIDEOHDR structure. See the Microsoft® Programmer's Guide in the Microsoft® Video for Windows Development Kit. The video packet fields are defined as follows:

lpData	Long pointer to the video frame data buffer.
dwBufferLength	Length of the data buffer pointed to by lpData, in bytes.
dwBytesUsed	Length of bytes used in the data buffer.
dwTimeCaptured	Time, in milliseconds, between the current frame and the beginning of the capture session. This field is preferably used to carry a timestamp used to synchronize audio and video frames at the receiving endpoint.
dwUser	Reserved for application use.
dwFlags	Information about the data buffer, defined flags are: VHDR_DONE Data buffer is ready for the application. VHDR_INQUEUE Data buffer is queued pending playback. VHDR_KEYFRAME Data buffer is a key frame. VHDR_PREPARED Data buffer has been prepared for use by the driver.
dwReserved	Reserved for driver use.
Type	Type of the packet, defined types are: VDATA(=1) Video data packet. VCNTL(=2) Control packet.
Message	Unused for video data packets. For control packets, may be one of the following: RESTART (=WM_USER+550h) Request for a key frame. When a RESTART control packet is sent, no video frame data is sent. WM_USER is a Microsoft ® Windows defined value and is preferably 400h. RESTART indicates the video stream needs to be restarted to recover from problems. WM_USER is a Microsoft ®-defined constant, indicating that all values greater than this number are application-defined constants.
Data	Compressed video frame data.

Video data packets are used to exchange actual video frame data and are identified by the Type field. In this case, the video software redirects the VIDEOHDR lpData pointer to the Data array which starts at the end of the packet. In this way, the packet header and data are kept contiguous in linear memory. The VIDEOHDR dwBufferLength field is used to indicate the actual amount of video data in the buffer and therefore the amount of data to be sent/received. Note that the receiving application must redirect lpData to its copy of Data since the memory pointer only has local significance. In a preferred embodiment, Data length has an upper bound of 18K bytes.

Compressed Video Bitstream

Referring now to FIG. **25**, there is shown a representation of the compressed video bitstream for conferencing system **100**, according to a preferred embodiment of the present invention. Each compressed video bitstream represents one frame of video data stored in the Data field for a video data packet of FIG. **24**. The video compression/decompression method associated with the compressed video bitstream of FIG. **25** is used for low-data-rate, relatively-low-frame-rate, teleconferencing applications. The method preferably operates at approximately (160×120) resolution, a data rate of approximately 100 Kb/sec, and a frame rate of around 10 frames/sec. Under these conditions, the compressed video bitstream may be encoded or decoded in real-time by an Intel® i750® processor, or decoded in real-time by an Intel® architecture processor such as an Intel® 80386, 80486, or Pentium® processor.

The fields of the compressed video bitstream of FIG. **25** are defined as follows:

VersionNumber	Compression method ID.
Flags	Contains various flag bits defined as follows: FLAGS_MV 1 FLAGS_FILTER 2 FLAGS_STILL_IMAGE 4 FLAGS_STILL_BLKS 8
DataSize	Size of the bitstream in units of bits.
Reserved1	Reserved field.
ImageHeight	Height of image in pixels.
ImageWidth	Width of image in pixels.
UVquant	Base quantization value for the U and V planes.
Yquant	Base quantization value for the Y plane.
StillStrip	Strip of blocks encoded as still blocks (for delta images only). If StillStrip = 0, there is no still strip. Otherwise, the strip of blocks is determined as follows. Consider the blocks of the Y, V, and U planes in raster order as a linear sequence of blocks. Divide this sequence of blocks into groups of 4 blocks, and number each group with the sequential integers 1, 2, 3, etc. These numbers correspond to the value

HUAWEI EX. 1016 - 579/714

-continued

	of StillStrip. In a preferred embodiment, all planes have dimensions that are integer multiples of 4.
StillThresh	Locations of additional blocks in the image that are encoded as still blocks (only if the FLAGS_STILL_BLKS flag is set). The rule for identifying these blocks is based on the quantization value quant for each block as determined during the decoding procedure. A block is a still block if quant < = StillThresh These still blocks are independent of the blocks in the still strip, which are encoded as still blocks regardless of their quant values.
FilterThresh	Blocks to which the loop filter is to be applied (only if the FLAGS_FILTER flag is set) The rule for applying the loop filter is to apply it to a block if quant < = FilterThresh
MotionVectors[ ]	Array describing the motion vectors used in decoding the image (only present if the FLAGS_MV flag is set). There is one 8-bit motion vector field for each (16 × 16) block in the image.
huffman data	The compressed data for the image.

FLAGS_MV indicates whether motion vectors are present in the bitstream (i.e., whether the MotionVectors[] array is present). A delta frame with FLAGS MV=0 is interpreted as one in which all the motion vectors are 0. FLAGS_FILTER indicates whether the loop filter is enabled for this image. If enabled, then the loop filter may be used on each block in the image, as determined by the value of FilterThresh. FLAGS_STILL_IMAGE indicates whether the image is a still frame or a delta (non-still) frame. A still frame is one in which all blocks are encoded as still blocks. In a delta frame, most blocks are delta blocks, but there may be a strip of still blocks in the image, as specified by the StillStrip field, and there may be additional still blocks as determined by the value of StillThresh. FLAGS_STILL_BLKS indicates whether "additional still blocks" are enabled for this image. If enabled, then any block with quantization value less than or equal to StillThresh is coded as a still block.

A quantization value is a number in the range 0–15 that indicates one of a set of sixteen (8×8) quantization matrices, with 0 indicating the coarsest quantization and 15 indicating the finest. The UVquant and Yquant variables are referred to as base quantization values. The base quantization value is the value selected for use at the beginning of a plane, and is used for the entire plane unless changed by a NEWQ code inserted in the bitstream. The preferred **16** quantization matrices are:

```
5 5 6 6 7 7 8 8
5 5 6 6 7 7 8 8
6 6 6 6 7 7 8 8
6 6 6 6 7 7 8 8
7 7 7 7 7 7 8 8
7 7 7 7 7 7 8 8
8 8 8 8 8 8 8 8
8 8 8 8 8 8 8 8
5 4 5 5 6 6 7 7
4 4 5 5 6 6 7 7
5 5 5 5 6 6 7 7
5 5 5 5 6 6 7 7
6 6 6 6 6 6 7 7
6 6 6 6 6 6 7 7
7 7 7 7 7 7 7 7
7 7 7 7 7 7 7 7
5 4 5 5 5 5 7 7
4 4 5 5 5 5 7 7
5 5 5 5 5 5 7 7
5 5 5 5 5 5 7 7
5 5 5 5 5 5 7 7
7 7 7 7 7 7 7 7
7 7 7 7 7 7 7 7
```

-continued

```
5 4 5 5 5 5 6 6
4 4 5 5 5 5 6 6
5 5 5 5 5 5 6 6
5 5 5 5 5 5 6 6
5 5 5 5 5 5 6 6
5 5 5 5 5 5 6 6
6 6 6 6 6 6 6 6
6 6 6 6 6 6 6 6
5 4 5 5 5 5 6 6
4 4 5 5 5 5 6 6
5 5 5 5 5 5 6 6
5 5 5 5 5 5 6 6
5 5 5 5 5 5 6 6
5 5 5 5 5 5 6 6
6 6 6 6 6 6 6 6
6 6 6 6 6 6 6 6
5 4 4 4 5 5 6 6
4 4 4 4 5 5 6 6
4 4 4 4 5 5 6 6
5 5 5 5 5 5 6 6
5 5 5 5 5 5 6 6
6 6 6 6 6 6 6 6
6 6 6 6 6 6 6 6
5 4 4 4 5 5 5 5
4 4 4 4 5 5 5 5
4 4 4 4 5 5 5 5
4 4 4 4 5 5 5 5
5 5 5 5 5 5 5 5
5 5 5 5 5 5 5 5
5 5 5 5 5 5 5 5
5 5 5 5 5 5 5 5
5 4 4 4 4 4 5 5
4 4 4 4 4 4 5 5
4 4 4 4 4 4 5 5
4 4 4 4 4 4 5 5
4 4 4 4 4 4 5 5
4 4 4 4 4 4 5 5
5 5 5 5 5 5 5 5
5 5 5 5 5 5 5 5
4 3 4 4 5 5 6 6
3 3 4 4 5 5 6 6
4 4 4 4 5 5 6 6
4 4 4 4 5 5 6 6
5 5 5 5 5 5 6 6
5 5 5 5 5 5 6 6
6 6 6 6 6 6 6 6
6 6 6 6 6 6 6 6
4 3 4 4 4 5 5 5
3 3 4 4 5 5 5 5
4 4 4 4 5 5 5 5
4 4 4 4 5 5 5 5
5 5 5 5 5 5 5 5
5 5 5 5 5 5 5 5
5 5 5 5 5 5 5 5
5 5 5 5 5 5 5 5
4 3 4 4 4 4 5 5
```

HUAWEI EX. 1016 - 580/714

-continued

```
3 3 4 4 4 4 5 5
4 4 4 4 4 4 5 5
4 4 4 4 4 4 5 5
4 4 4 4 4 4 5 5
4 4 4 4 4 4 5 5
5 5 5 5 5 5 5 5
5 5 5 5 5 5 5 5
4 3 3 3 4 4 5 5
3 3 3 3 4 4 5 5
3 3 3 3 4 4 5 5
3 3 3 3 4 4 5 5
4 4 4 4 4 4 5 5
4 4 4 4 4 4 5 5
5 5 5 5 5 5 5 5
5 5 5 5 5 5 5 5
4 3 3 3 4 4 4 4
3 3 3 3 4 4 4 4
3 3 3 3 4 4 4 4
3 3 3 3 4 4 4 4
4 4 4 4 4 4 4 4
4 4 4 4 4 4 4 4
4 4 4 4 4 4 4 4
4 4 4 4 4 4 4 4
4 3 3 3 3 3 5 5
3 3 3 3 3 3 5 5
3 3 3 3 3 3 5 5
3 3 3 3 3 3 5 5
3 3 3 3 3 3 5 5
3 3 3 3 3 3 5 5
5 5 5 5 5 5 5 5
5 5 5 5 5 5 5 5
4 3 3 3 3 3 4 4
3 3 3 3 3 3 4 4
3 3 3 3 3 3 4 4
3 3 3 3 3 3 4 4
3 3 3 3 3 3 4 4
3 3 3 3 3 3 4 4
4 4 4 4 4 4 4 4
4 4 4 4 4 4 4 4
3 3 2 2 2 2 3 3
3 3 2 2 2 2 3 3
2 2 2 2 2 2 3 3
2 2 2 2 2 2 3 3
2 2 2 2 2 2 3 3
2 2 2 2 2 2 3 3
3 3 3 3 3 3 3 3
3 3 3 3 3 3 3 3
```

There is one motion vector per (16×16) block of the Y plane, listed in block raster-scan order. The number of (16×16) blocks in the image, and hence the size of this array, can be determined from ImageHeight and Image Width as:

```
(ImageHeight+15)>>4)*((ImageWidth+15)>>4)
```

In each byte of the MotionVector[] array, the upper 4 bits specifies the X component of the motion vector and the lower 4 bits specifies the Y component (both in two's-complement notation). Both components of the motion vector are between +7 and −7, inclusive. The motion vectors preferably apply to the plane only; the U and V planes are processed by the decoder using motion vectors of **0**.

Video Decoding Procedure

For conferencing system **100**, images are encoded in a 9-bit YUV format (i.e, YUV 4:1:1 format), in which there are three 8-bit planes of pixels (Y, U, and V) with U and V subsampled by 4× in both directions. Each plane is subdivided into a grid of (8×8) blocks of pixels, and each block is encoded using a frequency-domain transform. The planes are encoded in the order Y, V, and U, and within each plane the blocks are traversed in raster-scan order.

If a given plane's dimensions are not evenly divisible by **8**, "partial blocks" at the right or bottom edges will occur. Partial blocks are encoded by padding them out to the full (8×8) size (using whatever method the encoder chooses, such as replicating the last column and/or row or pixels) and encoding them as if they were full blocks. In the decoder, such blocks are reconstructed by first decoding the full (8×8) block but then writing only the partial block to the final image bitmap in memory. The decoder can determine the location and sizes of partial blocks entirely from its knowledge of the image dimensions (ImageHeight and ImageWidth).

Each (8×8) block is encoded using a transform method. Instead of the discrete cosine transform (DCT), a simpler transform known as the discrete slant transform (DST) is used. The DST is almost as good at the DCT, in terms of compression and quality, but is simpler and faster for both an Intel® i750® processor and an Intel® architecture processor such as an Intel® 80386. 80486, or Pentium® processor to compute.

All the data in the bitstream, after the header, is Huffman encoded. Unlike H.261 and MPEG, which have a multiplicity of Huffman tables, for conferencing system **100**, a single Huffman table is used for encoding all values. This single Huffman table is:

# codes	
0xx	4
10xxx	8
110xxxx	16
1110xxxxx	32
11110xxxxxx	64
111110xxxxxx	64
1111110xxxxxx	64
Total	252

This table defines **252** Huffman codes of lengths 3, 5, 7, 9, 11, 12, and 13 bits. Only the first 231 of these Huffman codes are preferably used; the remaining ones are reserved for future expansion. In the pseudo-code below, the function huffdec() appears. This function does a huffman-decoding operation on the next bits in the bitstream, and returns the index of the code word in a lexicographically-ordered list, like so:

Code word	Value returned
000	0
001	1
010	2
011	3
10000	4
10001	5
10010	6
etc.	

The first step in decoding a block is to decode what are known as the "run/value pairs" (or run/val pairs, for short) for the block. Each run/val pair represents one non-zero DST frequency-domain coefficient.

This procedure also updates the current quantization value (held in the variable quant) when a NEWQ code is received from the bitstream. The value of quant is initialized at the start of each plane (Y, U, and V) to either Yquant or UVquant, but may be adjusted up or down by NEWQ codes in the bitstream. Note the following important rule, not made explicit by the pseudo-code below: a NEWQ code may preferably only occur at the beginning of a block. A decoder may use this fact to make decoding faster, since it need not check for NEWQ codes in the middle of parsing a block.

The procedure for decoding the run/val pairs and NEWQ codes is as follows:

HUAWEI EX. 1016 - 581/714

```
k = 0;
while (1)
{
    v = huffdec();
    if (v == EOB)
        break;
    else if (v == NEWQ)
        quant += tosigned(huffdec());
    else if (v == ESC)        // get explicit run,val from
                              // bitstream
    {
        run[k++] = huffdec() + 1;
        val[k++] = tosigned(huffdec() | (huffdec() << 6));
    }
    else                      // lookup run,val in tables
    {
        run[k++] = runtbl[v];
        val[k++] = valtbl[v];
    }
}
```

The function tosigned() converts from an unsigned number to a non-zero signed number, as follows:

```
tosigned(n)
{
    v = (n >> 1) + 1;
    if (n & 1) v = -v;
    return(v);
}
```

This conversion-is used on both the quantization change and the explicit value read after an ESC, both of which are non-zero signed numbers. EOB, ESC, and NEWQ are specific decoded values defined as follows:

EOB=0

ESC=30

NEWQ=6

Finally, runtbl[] and valtbl[] are preferably defined as follows:

```
runtbl[] = {
    0   1   1   2   2   1   0   1
    1   1   3   3   2   1   1   5
    4   4   5   6   6   3   1   2
    1   3   1   2   7   1   0   2
    7   9   8   4   1   5   1   1
    2   4   2   8  10   3  13   1
    1   1   1   1   1  11   2  15
    1   4   1   7   9  14   7  21
    7  20  11   3   5   4  16   5
    2   1   1   1   1   1  32   1
    1   1   2   1   1  24   1  27
   12  12  13  13  29  12  13  14
   14  31  29  28  28  30  10  10
   10  11  10  12  10  21   9   9
   30  31  11  23  14  19  18  19
   19  21  18  18  19  22  23  20
   22  21  20  22  22  20  16  26
   26  16  15  32  15  27  15  18
   17  17  25  17  17  24  25  16
    2   3   1   3   3   3   3   2
    3   2   3   4   4   3   3   3
    3   3   4   3   3   1   1   1
    1   2   1   1   1   1   1   1
    2   2   2   9   2   2   2   2
    2   6   6   6   6   6   9   6
    6   6   6   8   8   8   7   8
    7   7   7   7   5   5   4   4
    4   4   4   4   4   4   5   4
    6   5   5   5   5   5   5
}
valtbl[] = {
    0  -1   1  -1   1  -2   0   2
   -3   3  -1   1   2   4  -4  -1
    1  -1   1  -1   1  -2  -6  -2
    5   2  -5  -3  -1   6   0   3
    1   1   1  -2  -7   2  -9  10
   -5   2   5  -1  -1   3   1 -10
   -8 -11   7   8   9  -1   4  -1
  -13   4 -12   2  -1   1  -3  -1
   -2   1   1   4  -2   7  -1  -4
    6  17 -15 -14  11  12  -1  13
   14  15  -4  -6 -16  -1 -18   1
   -1   2  -2  -1   1   1   2  -2
   -1   1  -1  -1   1  -1   1   2
    3  -2  -2  -2  -3   2   2   3
    1  -1   2   1   2   2  -1   1
   -1   1   2   1  -2  -2  -1   2
   -1  -2  -1   1   2  -2   1  -1
    1  -2   2   1   1  -1  -2  -2
    2   1   1  -2  -1   1  -1   2
  -10  -4 -22  -6  -7  -9  -8  11
  -10  12   6  -8  -9  10  -3   9
    8   7  -7   5  -5  21  20  19
  -21  10  16 -17 -19 -20  18  22
```

HUAWEI EX. 1016 - 582/714

-continued

```
    8    7   -7   -2   -8   -9  -11  -12
    9    6    5    4    3   -4   -3   -2
   -3   -5    2    3    2   -2   -5   -3
    5    4    3   -4    7   -7    9    8
    6    5   -5    3   -3   -4    6   -6
   -6    5   -6    4    3   -3   -5
}
```

The next step in decoding is to convert the run/val pairs into an (8×8) block of DST coefficients, as follows: Define the scan path through an (8×8) matrix by the following numbers:

```
 0  1  4  9 17 18 37 38
 2  3  8 10 19 25 39 45
 5  7 11 14 24 26 44 46
 6 12 13 15 27 32 47 53
16 20 23 28 31 33 52 54
21 22 29 30 34 35 55 60
36 40 43 48 51 56 59 61
41 42 49 50 57 58 62 63
```

where the scan path is found by traversing these numbers in increasing order. The (8×8) block of DST coefficients coeff **[8][8]**is created by the following procedure:

```
for (i=0; i<8; i++)
    for (j=0; j<8; j++)
        coeff[i][j] = 0;
start at position "-1" on the scan path (one step "before"
0) for (each run/val pair)
{
    step forward by 'run' positions on the scan path
    deposit 'val' at the new position
}
```

The next step is to dequantize the block of coefficients. This is done by applying quantization matrix number quant, as follows:

```
for (i=0; i<8; i++)
    for (j=0; j<8; j++)
        coeff[i][j] = coeff[i][j] << qmatrix[quant][i][j];
```

The next step is to undo "DC prediction," which is used to further compress the DC coefficient coeff**[0][0]** in still blocks. If the block being decoded is a still block (either because this is a still image, or because this block is part of the still strip in a relative image), DC prediction is undone by applying the following equations:

coeff**[0][0]**+=prevDC

prevDC=coeff[0][0]

The value of prevDC is initialized to 8*128 at the start of each image plane.

The next step is to transform the (8×8) coefficient array into the spatial domain. This is done by applying an (8×1) DST to each of the 8 rows and 8 columns of coeff[][]. The (8×1) DST can be described as follows:

```
slant8x1(s,d,fwd) // s = src array, d = dst array,
int s[],d[],fwd; // fwd = 1 for forward xform, 0 for
// inverse
```

-continued

```
{
    int r1,r2,r3,r4,r5,r6,r7,r8;
    int t,t1,*p;
    if (fwd)
    {
        p = s;
        r1 = *p++;
        r2 = *p++;
        r3 = *p++;
        r4 = *p++;
        r5 = *p++;
        r6 = *p++;
        r7 = *p++;
        r8 = *p++;
        SlantPart1;
        SlantPart2;
        SlantPart3;
        SlantPart4;
        *p = d;
        *p++ = r1;
        *p++ = r4;
        *p++ = r8;
        *p++ = r5;
        *p++ = r2;
        *p++ = r6;
        *p++ = r3;
        *p++ = r7;
    }
    else
    {
        p = s;
        r1 = *p++;
        r4 = *p++;
        r8 = *p++;
        r5 = *p++;
        r2 = *p++;
        r6 = *p++;
        r3 = *p++;
        r7 = *p++;
        SlantPart4;
        SlantPart3;
        SlantPart2;
        SlantPart1;
        p = d;
        *p++ = r1;
        *p++ = r2;
        *p++ = r3;
        *p++ = r4;
        *p++ = r5;
        *p++ = r6;
        *p++ = r7;
        *p++ = r8;
    }
}
```

where butterfly(x,y) is the following operation:

```
butterfly(x,y):
    t = x+y;
    y = x-y;
    x = t;
```

and SlantPart**1**, SlantPart**2**, SlantPart**3**, SlantPart**4** are four macros defined as follows:

HUAWEI EX. 1016 - 583/714

```
#define SlantPart1\
    bfly(r1,r4);\
    bfly(r2,r3);\
    bfly(r5,r8);\
    bfly(r6,r7);\
#define SlantPart2\
    bfly(r1,r2);\
    reflect(r4,r3);\
    bfly(r5,r6);\
    reflect(r8,r7);
#define SlantPart3\
    bfly(r1,r5);\
    bfly(r2,r6);\
    bfly(r7,r3);\
    bfly(r4,r8);
#define SlantPart4
    t = r5 - (r5>>3) + (r4>>1);\
    r5 = r4 - (r4>>3) - (r5>>1);\
    r4 = t;
#define reflect(s1,s2)
    t = s1 + (s1>>2) + (s2>>1);\
    s2 = -s2 - (s2>>2) + (s1>>1);\
    s1 = t;
```

The (8×1) DSTs are preferably performed in the following order: rows first, then columns. (Doing columns followed by rows gives slightly different, incorrect results.) After doing the (8×1) DSTs, all 64 values in the resulting (8×8) array are preferably right-shifted by 3 bits, and then clamped to the range (−128, 127), if a delta block, or to the range (0, 255), if a still block.

If the block being decoded is a still block, no more processing is required. The DST calculation produces the block of reconstructed pixels to be written to the image.

If the block being decoded is a relative block, the block of reconstructed pixels is calculated as:

```
for (i=0; i<8; i++)
    for (j=0; j<8; j++)
        image[i][j] = clamp0_255(prev[i][j] + array[i][j]);
```

where array[][] is the result of the DST calculation, prev[][] is the (8×8) block of pixels from the previous image, and clamp0_2550 is a function that clamps a value to the range (0,255). The previous block is the one in the same spatial location as the block in the current image, but offset by the motion vector for that block, which is either determined from the MotionVector array (if processing the Y plane) or is 0 (if processing the U or V plane, or if FLAGS_MV==0).

During decoding the loop filter may need to be selectively applied. If the FLAGS_FILTER flag is set, and if a block is not a still block, and if the quantization value for a block satisfies

quant<=FilterThresh

and if the block is not empty (i.e., does not consist of only EOB), then the loop filter is applied to prev[] before adding the array[][] deltas. The preferred loop filter is a filter with kernel as follows:

$$\begin{matrix} 1 & \cdot & 1 \\ \cdot & \cdot & \cdot \\ \cdot & x & \cdot \\ \cdot & \cdot & \cdot \\ 1 & \cdot & 1 \end{matrix}$$

where the pixel marked x is replaced by:

$$x=(a+b+c+d)>>2$$

where a,b,c,d are the four pixels in the corners of the (3×3) block. On the edges of an (8×8) block, a one-dimensional (1 0 1) kernel is preferably used. The corner pixels of the block are preferably not filtered.

Intra/Inter Decision Rules

A certain class of motion compensated video compression systems encode certain blocks in motion compensated difference images as "intra" blocks and others as "inter" blocks. The decision to encode a block as an intra or inter block is based on a decision rule which is referred to as the "intra/inter decision rule". This section describes a preferred method for generating an intra/inter decision rule for conferencing system **100**. The intra/inter decision rule generated by this method is (1) computationally simple, (2) encoded implicitly (requiring no bits for differentiating intra vs. inter blocks, (3) adaptive to spatiotemporal image content, and (4) statistically optimal in providing a means of differentiation between motion compensation artifacts and scene features.

The conventional objective of encoding some blocks as intra in motion compensated difference frames is to reduce the number of bits required to encode those blocks that have low spatial variation but high temporal variation. The objective of encoding some blocks as intra in difference frames is to reduce the effects of high frequency motion compensation artifacts (sometimes referred to as "mosquitoes" in the literature) without having to use (computationally expensive) loop filtering. An area in a motion compensated difference frame that exhibits mosquitoes when encoded as a quantized difference will instead appear blurred if encoded as a quantized intra.

The preferred technique for generating an intra/inter decision rule for a given motion compensated video compression system works as follows:

Given:

1. A transform
2. A set of N quantizers for Inter blocks (Q1, Q2, . . . , QN)
3. A set of M quantizers for Intra blocks (K1, K2, . . . , KN)
4. A set of "training data" that is representative of the application in hand.

Let SAD(i,j) denote the "Sum of absolute differences" for block (i,j) in a motion compensated difference image.

Step 1:

For each Quantizer Qi, perform the following operation:

a. Compress the training data, using Qi as the quantizer for all the blocks in the all the motion compensated difference images.

b. By a visual observation of the (compressed and decompressed) training image : sequences, collect all blocks that contain perceptible mosquitoes.

c. From the set of blocks collected in (b), find the block with the lowest SAD. Denote the SAD of the block with the lowest SAD as LSADi (corresponding to quantizer Qi).

d. From the set of blocks collected in (b), select a subset of n blocks with the lowest SADs in the set.

e. For each block in the subset collected in (d), determine the number of bits required to encode the block. Let B be the average number of bits required to encode a block in the subset. For each intra quantizer Kj, determine the average number of bits BKj required to encode a block in the subset as an intra (using quantizer Kj). From the set {BK1, BK2, . . . , BKM}, find j such that |B-BKj| is minimized. Kj is the intra quantizer assigned to Qi.

HUAWEI EX. 1016 - 584/714

Step 2:

From Step 1, for each Qi, there is a corresponding LSADi which is the lowest SAD value for which there are perceptible motion compensation artifacts and an intra quantizer Kj. The intra/inter decision rule is defined as follows:

For each block (p,q) in a motion compensated difference frame, given a quantizer Qi (as determined by an external quantizer selection process) the block is encoded as intra if and only if SAD(p,q) >LSADi. Intra quantizer Kj is used to encode the block.

A major advantage of the intra/inter decision rules generated by this technique is that the intra/inter decision is implicit in the method and is known to both the encoder and decoder. Therefore, it does not need to be explicitly transmitted and thus requires no bits.

Post Reconstruction Loop Filtering

This section describes a preferred method of "loop filtering" for conferencing system **100** for the reduction of high frequency artifacts associated with motion compensated video compression for the present invention. A traditional loop filtering operation operates on the previously decoded (reference) image. Certain blocks of the previously decoded image are low-pass filtered prior to motion compensation. This reduces the high frequency content in the reference block and, as a result, the high frequency content in the final output.

In the preferred method of loop filtering, a low-pass filter is applied to certain blocks after the motion compensation and addition operation to generate a filtered reconstructed image. This approach to loop filtering has two major advantages:

1. It is easier to implement, since the motion estimation and differencing operations may be merged into one operation.
2. It has a greater low-pass filtering effect on the reconstructed image since the final image is filtered instead of the reference image only.

Adaptive Loop Filter Switching Criteria

This section describes a preferred method for generating a criterion for the switching ("on" or "off") of a loop filter in conferencing system **100**. The loop filter switching criterion generated by this method is better adapted to the spatiotemporal image content and provides a differentiation between motion compensation artifacts and scene features. A traditional loop filtering operation operates on the previously decoded (reference) image. Certain macroblocks (typically 16×16 areas) of the previously decoded image are low-pass filtered prior to motion compensation. This reduces the high frequency content in the reference macroblock and, as a result, the high frequency content in the final output.

The objective of loop filtering is to reduce high frequency artifacts associated with residual quantization noise in motion compensated difference images. Ideally, only those macroblocks should be filtered that exhibit such motion compensation artifacts. A criterion for deciding whether or not a given macroblock should be loop filtered or not is referred to as the "loop filter switching criterion."

A conventional loop filter switching criterion is to apply a loop filter if the macroblock has a non-zero motion vector and not to apply it if the motion vector for the given macroblock is the zero vector. A major drawback of this criterion is that it filters macroblocks that have non-zero motion but no motion compensation artifacts.

The preferred method for generating a loop filter switching criterion works as follows:

Given:

1. A transform
2. A set of N Quantizer (**Q1**, Q2, . . . , QN)
3. A set of representative "training data" for the application at hand.

Let SAD(i,j) denote the "Sum of absolute differences" for Macroblock (i,j) in a motion compensated difference image.

Step 1:

For each Quantizer Qi, perform the following operation:

a. Compress the training data, using Qi as the quantizer for all the macroblocks in the all the motion compensated difference images.

b. By a visual observation of the (compressed and decompressed) training image sequences, collect all macroblocks that contain perceptible high frequency motion compensation artifacts (sometimes referred to as "mosquitoes" in the literature).

c. From the set of macroblocks collected in (b), find the macroblock with the lowest SAD. Denote the SAD of the macroblock with the lowest SAD as LSADi (corresponding to quantizer Qi).

Step 2:

From Step 1, for each Qi, there is a corresponding LSADi which is the lowest SAD value for which there are perceptible motion compensation artifacts. The loop filter switching criterion is defined as follows:

For each Macroblock (p,q) in a motion compensated difference frame, given a quantizer Qi (as determined by an external quantizer selection process) the loop filter is applied if only if SAD(p,q)>LSADi.

Design of Quantization Tables

This section describes a preferred method for designing quantization tables to be used for quantization in conferencing system **100**. This preferred method exploits the perceptual properties of the human visual system in a statistical sense to arrive at quantization tables that minimize perceived quantization artifacts at a given effective bit rate.

In conventional video compression systems, the quantization process is spatially adaptive. Different regions in the image are quantized using different quantizers. In a transform-based video compression system that uses linear quantization, the quantization operation may be completely specified by a table of numbers, each of which corresponds to the (linear) quantizer step size to be used to quantize a specific frequency band in the transform domain.

The present invention relates to the design of the quantization table Q[**8**][**8**]for conferencing system **100**. The design process is as follows:

Given:

1. Transform-based conferencing system **100**
2. A set of video sequences that are representative of the application at hand
3. A specification of target bitrate (or compression ratio) for the application.

Objective:

To design a set of N quantization tables **Q1**, **Q2**, . . . , QN such that:

a. QN/2 results in target bitrate for typical video sequences.

b. **Q1**, . . . , QN meet a specified dynamic range specification. For a given video sequence, the bitrate generated using **Q1** should be about K times the bitrate generated by QN. Here K is the dynamic range specification and is usually dependant on the variability of the allocated channel bandwidth of the channel over which the compressed video bitstream is being transmitted.

c. **Q1**, . . . , QN minimize the perceived artifacts in the processed (compressed and decompressed) video

HUAWEI EX. 1016 - 585/714

sequence at their point of operation (in terms of bit rate).

Procedure:

Step 1. Design of Q1

Q1 is the weakest quantizer table and is designed so as to generate no perceptible artifacts at the expense of a bitrate that is potentially much higher than Target Bitrate. Q1 is designed as follows:

Set Q[i][j]=1 for all i,j (all frequency bands) Starting from the lowest frequency band to the highest frequency band,

a. Increment Q[i][j]
b. Use Q[8][8] as the quantizer in the given video compression system
c. If there are any perceivable artifacts in the processed video sequence,
   i. Decrement Q[i][j]
   ii. Goto the next band
   Else goto (a)

The above process generates a quantizer table (Q1) that is at the perceptual threshold, referred to as the perceptual threshold quantizer (PTQ).

Step 2. Design of Q2, Q3, . . . , QN/2

Let B1 be the bitrate generated using quantizer Q1 with a typical video sequence. Let BT be the target bitrate. The objective now is to design Q2, Q3, . . . QN/2 such that QN/2 generates target bitrate (BT) for typical sequences and Q2, Q3, . . . , QN/2-1 generate monotonically decreasing intermediate bitrates between B1 and BT. From the perspective of a bitrate controller, it is desirable to have a linear decrease in bitrate with quantizer table index. Tables Q2, Q3, . . . , QN/2 are designed with this requirement in mind. The following is the design procedure for tables Q2,Q3, . . . , QN/2:

Let dB=(B1–BT)/(N/2).

Set Q2=Q1

For each quantizer Qk, k=2 to N/2

Starting from the highest frequency band to the lowest frequency band,

a. Set Qk = Qk-1
b. Increment all Qk[i][j] with the same horizontal or vertical frequency
c. Use Qk[8][8] as the quantizer in the given video compression system
d. If the bitrate is reduced by dB,
   i. Save the state of Qk[8][8]
   ii. Goto the next band at 1
   Else goto 2.
e. Amongst the quantizer states saved in (d)(i), select that quantizer that has the least perceptible artifacts for typical video. This is the choice for Qk.

Step 3. Design of QN/2+1, . . . , QN.

From the perspective of a bitrate controller, it is desirable to have a progressively increasing decrease in bitrate with quantizer table index from table N/2+1 to table N. The design of tables QN/2+1, . . . , QN is the same as the design for tables 2, . . . , N/2 except that for each new table, dQ increases instead of remaining constant. The magnitudes of the dQs for quantizers QN/2+1, . . . , QN depend on the desired dynamic range in bitrate and the manner of decrease in bitrate with quantizer table index. For example, if the desired dynamic range is BT to BT/4 from QN/2 to QN and the decrease in bitrate is logarithmic then

dQ(N/2+1) = dQ(N/2)
for i=(N/2+2) to (N/2)
dQi = kdQi–1
dQ(N/2+1) + dQ(N/2+2) + . . . + dQN = BT – BT/4
dQ(N/2)(1 + k + k*k + k*k*k + . . .) = 3BT/4
(1 + k + k*k + k*k*k + . . .) = 3BT/4 / (dQN/2)
(1+2+3+4+ . . . +(N/2–1)) logk = log (3BT/4 / dQN/2)
logk = log (3BT/4 / dQN/2) / N/4
k = (3BT/4 / dQN/2) to the power 4/N

Adaptive Transform Coefficient Scanning

This section describes a preferred method of transform coefficient scanning in conferencing system **100**, a transform-based image and video compression system, that exploits the properties of the transform and the associated quantization technique to generate coefficient scan orders that generate the lowest bitrates. The image (for image compression) or motion compensated difference (for motion compensated video compression) is transformed. The transformed coefficients are quantized. The transformed quantized coefficients are scanned in a certain order from a two dimensional array to a one dimensional array. This one dimensional array is re-represented by a run-length - value (RV) representation. This representation is then entropy coded and the result transmitted or stored to be decoded.

The preferred method applies to the "scan" part of the processing where the quantized transformed coefficients are scanned from a two dimensional array to a one dimensional array. The purpose of this scanning is to facilitate efficient representation by a RV representation. The same scan-order is applied to every block in the representation.

The preferred method of scanning involves the following operations:

Given:

1. A transform.
2. A set of N quantizers (typically quantization matrices) denoted by Q1, Q2, . . . , QN.
3. Representative "training" data for the target application.

Step 1.

For each quantizer Qi, generate quantized transformed blocks for all of the training data.

Step 2.

Compute the average amplitude for each of the transform coefficients from the quantized transformed blocks for all the training data.

Step 3.

Sort the average amplitudes computed in Step 2,

Step 4.

For quantizer Qi, the scan order Si is generated by the locations of the (amplitude sorted) coefficients from Step 3. The largest coefficient is the first in the scan order and the smallest is the last.

Using this preferred method, a scan order Si is generated for each quantizer Qi. In the encode and decode process, for each block for which Qi is used as the quantizer, Si is used as the scan order.

The advantage of this invention over previous scanning techniques is that due to the adaptive scan orders, the RV representations are more efficient and for a given quantizer, fewer bits are required to encode a given block than with conventional nonadaptive zigzag scanning.

Spatially Adaptive Quantization

This section describes a preferred method of spatially adaptive quantization for conferencing system **100**. The preferred method provides a means of efficiently encoding motion compensated difference images. A conventional nonadaptive quantization technique simply takes a given quan-

HUAWEI EX. 1016 - 586/714

tizer for each frame and applies that quantizer uniformly to every macroblock (16×16 area) in the image. An adaptive quantization technique applies different quantizers to different macroblocks in a given frame. Information about which quantizer has been applied to which block is also encoded and transmitted.

The preferred method of spatially adaptive quantization is based on the "sum of absolute difference" (SAD) that has already been computed for each macroblock by the motion estimation subroutine. The preferred quantizer selection method works as follows:

Step 1.

The mean SAD for the entire frame is computed. This denoted by MSAD.

Step 2.

For each macroblock, if the SAD of the macroblock is lower than the mean, then it is assigned a finer quantizer than the mean quantizer (which is the global quantizer for this frame passed down by the bit-rate controller). Conversely, if the SAD in the macroblock is higher than the mean, then it is assigned a coarser quantizer.

In a case where there are **16** quantizers, numbered 1 through 16 with higher numbers denoting finer quantizers, let SAD(i,j) be the SAD associated with the current macroblock (i,j). Let MSAD be the mean SAD in the frame. Let Q(i,j) denote the quantizer assigned to the current macroblock. Let QG denote the global quantizer for the frame. Then Q(i,j) is assigned as:

Q(i,j)=QG+8*log2 ((SAD(i,j)+2MSAD)/(2SAD<i,j)+MSAD))

Q(i,j) is saturated to the range (1,16) after performing the above operation.

There are 2 major advantages of the preferred spatially adaptive quantization technique over conventional techniques:

1. The spatial adaptation is based on values that have already been computed in the motion estimation routine. Therefore the spatial adaptation process is computationally simple.
2. The spatial adaptation process generates an optimal quality image given the bit-budget of the current frame by distributing bits to different macroblocks in proportion to the perceived effect of quantization on that macroblock.

Fast Statistical Decode

Host processor **202** preferably performs fast statistical decoding. Fast statistical decoding on host processor **202** allows time efficient decoding of statistically coded data (e.g., Huffman decoding). Moreover, since statistical Huffman coding uses code words that are not fixed (bit) length, the decoding of such codewords is generally accomplished one bit at a time. The preferred method is as follows:

1. Get next input bit and juxtapose with bits already in potential codeword (initially none).
2. If potential codeword is a complete codeword, then emit "symbol", eliminate bits in potential codeword, and go to (1). Otherwise, if potential codeword is not a complete codeword, then go to (1).

The preferred method of the present invention provides decoding of one "symbol" in one operation, as follows:

a. Get next (fixed number) several input bits.

b. Use the input bits to select a symbol and emit symbol.

c. Go to (a).

The statistical code used is designed to be "instantaneous," which means that no codeword "A" is a "prefix" of any codewords "B". This allows a lookup amble to be constructed which may be indexed by a potential codeword, unambiguously yielding a symbol corresponding to the codeword. The potential codeword is guaranteed to contain a complete codeword since it starts with a codeword, and it is as long as the longest codeword.

Contrast, Brightness, and Saturation Controls

This section describes a preferred integer implementation of contrast, brightness, and saturation controls for the present invention for adjusting and for application of the controls to realtime video. The implementation has two parts. The first is a method of generating translation tables to implement adjustable brightness, contrast, and saturation controls. The second is a method of using the tables to change the appearance of video being displayed.

The generation of the tables uses integer operations in the generation of tables that express floating point relations. Prior to application of any controls, the video data consists of a description of the Y, V, and U components at 8 bits per value. The problem is to provide a translation from the decoded Y values to Y values that reflect the current setting of the brightness and contrast controls, and further to provide a translation from the decoded U and V values to U and V values that reflect the current setting of the saturation control.

The method begins with an identity translation table (f(x)=x). As controls are changed, the identity translation becomes perturbed cumulatively. In the case of brightness, control changes are indicated by a signed biased value providing both direction and magnitude of the desired change. The current translation table are changed into f(x)=x-k, for x>=k, and f(x)=0 for 0<=x<k (decrease) or f(x)=x+k, for x<=255-k, and f(x)=255 for 255>=x>255-k (increase).

In the case of contrast, control changes are indicated by a scaled fractional value. The value indicated "n" represents "(n+i)/SCALE" change: a "change" of (SCALE-1) yields no change, a change of (SCALE) yields a change by 1/SCALE in each of the translation table values. The definition of contrast as y'=(n*(y−128))+128 (for 8 bit values) is then provided by subtracting **128** from the translation table value, multiplying by SCALE, multiplying by the indicate control change value, and then dividing by SCALE twice to remove the scale multiple implied in the representation of the control change value, and the multiply explicitly performed here. 128 is then added to the modified translation table value and the result is clamped to the range of 0 to 255 inclusive.

This method avoids the use of floating point arithmetic in the computation of the proper translation table values. In the definition offered of "contrast" the value "n" is a floating point number. Saturation is simply contrast as applied to the chrominance data, and is handled in the same way as the contrast control, but with a different copy of the translation table.

The translation tables are made available to the host processor in the same locale as the data that they are used to translate: after generation of the modified translation tables, the tables are appended to the data area for the luminance and chrominance, at known fixed offsets from the start of same data areas (on a per instance basis, each video window has its own copy of this data.) This allows the host processor to access the translation tables with a 1 processor clock penalty in address generation (for an Intel® 486 microprocessor; there is no penalty on an Intel® Pentium® processor), and with a high degree of locality of reference, and no pointer register reloads (due to the fixed offset.)

The translation of the decoded Y, V, and U values is performed by reading and translating eight values and then writing the eight translated values as two 32-bit values to the destination. This is important to Intel® architecture micro-

HUAWEI EX. 1016 - 587/714

processors, and in particular is important to the Intel® **486** processor, which usually runs with a write saturated bus.

For the method of performing the translation, the BX register is assumed to contain zeroes in the high order 8(24) bits. The low order 8 bits are loaded with the value to translate, and the value is used as the base register with an index register (set to the offset of the translation table +base of data buffer) in an indirect load to accomplish the translation. The destination of the load is changed as the operation is repeated over multiple values, until register storage is exhausted, at which point the translated values are written out and the cycle repeats. The process here described executes at a sustained three or four clocks per value translated.

Audio Protocol

Referring now to **FIG. 26**, there is shown a representation of a compressed audio packet for conferencing system **100**, according to a preferred embodiment of the present invention. Source audio is audio that is captured (and optionally monitored) at the local system and sent to the comm subsystem for transmission. Sink audio is audio that is received from the comm subsystem for playback on the local system. Audio is preferably handled on audio/comm board **206** and not on host processor **202**. The compressed audio packet of FIG. **26** is that which is actually sent/received from the communications subsystem and not necessarily that manipulated by an application on the host processor. The audio packet fields are defined as follows:

Timestamp	Value used to synchronize audio and video frames at the receive endpoint. The audio stream preferably generates timestamps as a master clock that are copied to the captured video frames before transmission.
Reserved	Reserved field.
Mute	Bit indicates whether or not the audio stream is muted or not. The audio is muted when the bit is set. When the Mute bit is set, no audio data is sent.
Data	Compressed audio data.

The length of the audio data is not explicitly specified in the packet header. A receiving endpoint's comm subsystem reassembles an audio packet and therefore implicitly knows the length and can report it to its application. The length-of an audio packet is a run-time parameter and depends on the compression method and the amount of latency desired in the system. The preferred audio compression/decompression method implementation has 100 msecond latency, which translates to 200 bytes of compressed audio data per packet.

Compressed Audio Bitstream:

The preferred audio stream for conferencing system **100** is a modification of the European Groupe Speciale Mobile (GSM). GSM was developed in the context of the standardization of the European digital mobile radio. It resulted from the combination of the Regular-Pulse Excitation/Linear-Predictive-Coding codec developed by Philips (Germany) with the Multi-Pulse-Excitation/Linear-Predictive-Coding codec devised by IBM (France). For further information, see the ETSI-GSM Technical Specification, GSM 06.10, version 3.2.0, UDC 621.396.21, published by the European Telecommunication Standards Institute in Valbonne Cedex, France.

The data rate of the standard GSM codec is 13.0 kbits/sec. The preferred GSM implementation for conferencing system 100 has a bit rate of 16 kbits/sec. The mean opinion score (MOS) quality rating of the preferred GSM implementation is 3.54. It is not prone to rapid quality degradation in the presence of noise. The relative complexity is about 2 MOPSs/s. Due to implementation processing considerations, the standard GSM implementation is adjusted to yield the preferred GSM implementation. In addition, headers are added to provide extra control information, such as frame counting and muting.

In order to save processing, the 260-bit audio frame is not packed. This results in a 320-bit frames. These frames occur every 20 mseconds. This increases the bit rate from 13 kbits/sec to 16 kbits/sec. The composition of the preferred audio frame is as follows:

```
typedef struct {    unsigned int lar1:   6;   \* stp parameters *\
                    unsigned int lar2:   6;
                    unsigned int lar3:   5;
                    unsigned int lar4:   5;
                    unsigned int lar5:   4;
                    unsigned int lar6:   4;
                    unsigned int lar7:   3;
                    unsigned int lar8:   3;   } STP;
typedef struct {    unsigned int lag     7;
                    unsigned int gain    2;   /* ltp parameters */
                    unsigned int grid    2;   /* rpe parameters */
                    unsigned int xmax    6;
                    unsigned int x0      3;   /* pulse amplitude*/
                    unsigned int x1      3;
                    unsigned int x2      3;
                    unsigned int x3      3;
                    unsigned int x4      3;
                    unsigned int x5      3;
                    unsigned int x6      3;
                    unsigned int x7      3;
                    unsigned int x8      3;
                    unsigned int x9      3;
                    unsigned int x10     3;
                    unsigned int x11     3;
                    unsigned int x12     3;   } LTP_RPE
typedef struct {    STP       frame;
                    LTP_RPE sub-
                    frame (4);             } GBMBITS;
```

The result of not packing these structs on a Texas Instruments® C31 DSP, a 32-bit processor, is a 320-bit frame. At a frame rate of 50 frames/sec, the data rate is 16.0 kbits/sec.

A header has also been added to groups of frames. The length of the header is one 32-bit word. The MSB is a mute flag (1=mute). The remaining bits represent a timestamp. This time stamp is not actually time, but is preferably a frame counter. The initial value of it is arbitrary. It is therefore a relative number representing the progress of audio frames and useable for synchronization.

Data Protocol

Data packets are inside TII packets. The data conferencing application will have its own protocol inside the TII protocol stack.

Communication-Level Protocols

The application-level audio, video, and data packets described in the previous section are sent to the comm subsystem for transmission to the remote site. The comm subsystem applies its own data structure to the application-level packets, which the comm subsystem treats as generic data, and defines a protocol for transport. In a preferred embodiment of the present invention, the basic transport is unreliable. That is, at the basic level, there is no guarantee that application data will reach the destination site and, even if it does, there is no guarantee as to the correctness of the data delivered. Some applications will use the unreliable communication services, such as audio and video. For applications requiring guaranteed delivery of data, reliability is built on the basic unreliable service. Application data is an example of a data type requiring reliable transport; control information between peer processes is another.

Reliable Transport Comm Protocols

Referring now to **FIG. 27**, there is shown a representation of the reliable transport comm packet structure, according to

HUAWEI EX. 1016 - 588/714

a preferred embodiment of the present invention. For reliable transport, conferencing system **100** preferably uses a protocol akin to LAPB. Since transport is preferably on ISDN B-channels, which are assumed to have already been set up, there is no need to include those portions of LAPB that deal with circuit establishment and teardown (e.g. SABM, FRMR, UA, and DISC). Therefore, the preferred reliable transport comm protocol is void of those portions. The fields of the preferred reliable transport comm packet are defined as follows:

Control	Defines the type of packet and relays acknowledgment information. The types of packets are: Information (I), Receiver Ready (RR), Receiver Not Ready (RNR), and Reject (REJ).
Length	Length of the client data portion of the packet, in bytes.
CRC	Cyclic redundancy check code.
Data	Client data of length specified by the Length field.

For an Information (I) packet, the format of the control field is as follows:

(Bit)	0	1–3	4	5–7
(Field)	0	NS	P	NR

The NS bit field is used to refer to a send sequence number. NS is interpreted as specifying to the receiving site the next packet to be sent. The NR bit field is used to refer to a receive sequence number. It is used to acknowledge to a sender that the receiver has received packet NR-1 and is expecting packet NR. The P bit field is the LAPB poll bit and is are not used in the preferred embodiment. All sequence numbers are modulo-8 meaning that at most 7 packets can be outstanding. It is the responsibility of the transmitting sites to assure that they do not have more than 7 packets outstanding. An Information packet is used to send client data. The receive acknowledgment can be piggybacked on in the NR bit field.

The Receiver Ready (RR), Receiver Not Ready (RNR), and Reject (REJ) packets are supervisory packets that are used for acknowledgment, retransmission, and flow control. They are not used to carry client data.

For a Receiver Ready (RR) packet, the format of the control field is as follows:

(Bit)	0	1	2	3	4	5–7
(Field)	1	0	0	0	PF	NR

The PF bit field is the LAPB poll/final bit and is not used in the preferred embodiment. The RR packet is used in two cases. The first case is to acknowledge packet receipt when there are no packets bending transmission on which to piggyback the acknowledgment. The second case is when the link is idle. In this case, an RR packet is sent periodically to assure the remote site that the local site is still alive and doing well.

For a Receiver Not Ready (RNR) packet, the format of the control field is as follows:

(Bit)	0	1	2	3	4	5–7
(Field)	1	0	1	0	PF	NR

The RNR packet is sent by a receiver to indicate to the remote site that the remote site should stop sending packets. Some condition has occurred, such as insufficient receive buffers, rendering the remote site unable to accept any further packets. The RNR packet is intended to be used for temporary flow control. When the remote site is able to accept more packets it issues an RR frame.

For a Reject (REJ) packet, the format of the control field is as follows:

(Bit)	0	1	2	3	4	5–7
(Field)	1	0	0	1	PF	NR

The REJ packet is sent as a form of negative acknowledgment. The receiver of an REJ packet interprets the NR bit field as a request to retransmit all packets from NR to the most currently sent, inclusive.

Unreliable Transport Comm Protocols

At the lowest layer of conferencing system **100**, an unreliable protocol is preferably used to transport data on the ISDN B-channels. For those applications requiring reliability, the reliable protocol discussed in the previous section is added on top of the unreliable protocol discussed in this section. The unreliable protocol sits atop of HDLC framing which the unreliable protocol uses for actual node-to-node transport of packets. Even though HDLC framing is used, a data link protocol is not implemented. In particular, there is no guarantee that data packets will be delivered or that they will be uncorrupted at the receive node of a link. The CRC validation of the HDLC is used to detect corrupted data.

The unreliable protocol provides for logical channels and virtualization of the two Basic Rate ISDN B-channels. Logical channels are local site entities that are defined between the DLM and TII is layer and the client (i.e., application program) using them. The logical channels provide the primary mechanism clients use to send multiple data types (e.g., audio, video, data). The layer services multiplex these data types together for transmission to the remote sites.

In a preferred embodiment, logical channel zero is used as a control channel. Site peers (i.e., two conferencing systems in a conferencing session) use this control channel to exchange information on their use of other logical channels. Logical channels are half-duplex. Therefore, two channels are necessary to send and receive data. A priority attribute is associated with a logical channel (and therefore with a data type). The unreliable protocol asserts that higher priority data will always be sent ahead of lower priority data when both are pending. Priorities are assigned by an API call to the TII services. Audio has the highest priority, then data, and last video.

Although the ISDN Basic Rate Interface (BRI) defines two physical 64 kbit/second B-channels for data, the services at both DLM and TII virtualize the separate B-channels as a single 128 kbit/second channel. Client data types, defined by their logical channels, are multiplexed into a single virtual stream on this channel. In a preferred embodiment, this inverse multiplexing is accomplished by breaking all packets into an even number of fragments and alternating transmission on the two physical B-channel connections. Initially, after channel establishment, the first fragment is sent on the B1channel, the second on the B2-channel, etc. At the receiving site, fragments are collected for reassembly of the packet.

Referring now to FIG. **28**, there is shown a representation of the unreliable transport comm packet structure, according to a preferred embodiment of the present invention. The fields of the preferred unreliable transport comm packet are defined as follows:

HUAWEI EX. 1016 - 589/714

Flag	Standard HDLC Flag field.
DestID	The receiving site's logical channel identifier. The transmitting site peer acquires this ID by communicating to the remote site before exchanging data. This is done using a control logical channel (i.e., channel zero).
SrcID	The sending site's logical channel identifier. The type of data in the packet can be determined by knowing the logical channel ID-to-data type mapping. The current implementation uses the following mapping: The mapping is from DLM channels to TII channels, which occur at the TII level. At the time the TII channel is opened for a datatype, TII dynamically assigns unique DLM channels for different data types in ascending order starting from one (1).
PktNo	The packet sequence number. Distinguished from the FragNo field which counts the fragments within a packet. The PktNo field is used by the receiving site peer to implement a sliding window protocol. This allows packet buffering which is used to compensate for transmission delays.
SOP	If the SOP bit is set, then the current fragment is the start of a packet.
EOP	If the EOP bit is set, then the current fragment is the end of a packet.
Rsvd	Reserved field.
FragNo	The fragment sequence number. Distinguished from the PktNo field which counts the number of whole packets. The FragNo is used by the receiving site peer to reassemble fragments into packets. The SOP and EOP fields are used to locate the start and end of a whole packet, respectively.
Data	The data field.

-continued

CRC	Standard HDLC CRC field.
Flag	Standard HDLC Flag field.

Data Structures, Functions, and Messages

This section contains the data structures and definitions of the functions and messages for conferencing API **506**, video API **508**, audio API **512**, and comm API **510**.

Conferencing API Data Structures, Functions, and Messages

Conferencing API **506** utilizes the following data types:

LPHCALL	Pointer to a call handle.
LPAVCB	Pointer to an Audio Video Control Block (AVCB).
LPCCB	Pointer to a Configuration Control Block (CCB).
LPBITMAPINFO	Pointer to a Microsoft ® Windows BITMAPINFO structure that defines a DIB (Device-Independent Bitmap).
LPHSTGRP	Pointer to the handle of a stream group.
LPABBUSCARDINFO	Pointer to a ABBUSCARDINFO, which defines the personal card information, from Address Book. Contains business card information; format is specified by the GUI.

Conferencing API **506** utilizes the following structures that are passed-to conferencing API **506** in function calls (e.g., CF_Init, CF_CapMon) and then passed by conferencing API **506** to the audio/video managers:

HUAWEI EX. 1016 - 590/714

LPAVCB	Pointer to an Audio Video Control Block (AVCB).
LPCCB	Pointer to a Configuration Control Block (CCB).
LPBITMAPINFO	Pointer to a Microsoft® Windows BITMAPINFO structure that defines a DIB (Device-Independent Bitmap).
LPHSTGRP	Pointer to the handle of a stream group.
LPABBUSCARDINFO	Pointer to a ABBUSCARDINFO, which defines the personal card information, from Address Book. Contains business card information; format is specified by the GUI.

Conferencing API 506 utilizes the following structures that are passed to conferencing API 506 in function calls (e.g., CF_Init, CF_CapMon) and then passed by conferencing API 506 to the audio/video managers:

```
 MCB (Media Control Block)
»  WORD    wType        Media type:
»                       CFMT_AUDIO  - Audio Type (e.g., narrow or wide band) ~~windband)~~
»                       CFMT_VIDEO  - Video Type

CCB (Configuration Control Block)
»  WORD    wVersion     Version Number
»   MCB    mtMedia[]    list of Media types supported by the system.


AVCB (Audio Video Control Block)
»  WORD    wType        Local or remote AVCB type:
»                       CFAVCB_LOCAL      - local AVCB type
»                       CFAVCB_REMOTE     - remote AVCB type

»  Union {
»            // local AVCB
»            struct {
»                  WORD wAIn          Audio input hardware source
»                  WORD       wAGain          Gain of the local microphone
»                  WORD       wAMute          On/Off flag for audio muting
»                  WORD       wVIn        Video input source
»                  DWORDdwVDRate      Maximum video data rate
»                  WORD       wVContrast  Video contrast adjustment
»                  WORD       wVTint      Video tint adjustment
```

```
»               WORD        wVBrightness    Video brightness adjustment
»               WORD        wVColor         Video color adjustment
»               WORD        wVMonitor       On/Off flag for local video monitoring
»               WORD        wVMute          On/Off flag for local video muting. As the flag is
                                            turned on/off, it will temporarily stop or restart the
                                            related operations, including playing and sending,
                                            being performed on this stream group. This can be
                                            temporarily hold one video stream and provide
                                            more bandwidth for other streams to use. For
                                            example, a video stream can be paused while an
                                            audio stream continues, to speed up a file transfer.
»           } localcb

»           // remote AVCB
»           struct {
»               WORD wAOut          Audio output hardware destination
»               WORD wAVol          Volume of the local speaker
»               WORD wAMute             On/Off flag for audio muting
»               WORD wVOut          Video output source
»               WORD wVContrast     Video contrast adjustment
»               WORD wVTint         Video tint adjustment
»               WORD wVBrightness   Video brightness adjustment
»               WORD wVColor            Video color adjustment
»               WORD wVMute             On/Off flag for local video muting
            } remotecb
»       }

»       // ADDR Information -  the address to be used for the conf. application to make a
                               Connection/call, via issuing the CF_MakeCall with the remote site.
»       // NOTE: This is the same as the TADDR structure defined by TII.
»       struct {
»           WORD wType          Type of Address, e.g., phone number, internet
»                               address, etc.
»           WORD wSize          Size of the following address buffer
»           LPSTR lpsAddrBuf    Address buffer
»       }
```

Conferencing API 506 utilizes the following constants:

Conferencing Call States:

```
CCST_NULL           Null State
CCST_IDLE           Idle State
CCST_CONNECTED      Connected state
CCST_CALLING        Calling State
CCST_ACCEPTING      Accepting State
CCST_CALLED             Called state
CCST_CLOSING        Closing State
```

HUAWEI EX. 1016 - 592/714

Conferencing Channel States:

CHST_READY	Ready State
CHST_OPEN	Opened state
CHST_OPENING	Opening state
CHST_SEND	Send state
CHST_RECV	Recv state
CHST_RESPONDING	Responding state
CHST_CLOSING	Closing state

Conferencing Stream States:

CSST_INIT	Init state
CSST_ACTIVE	Active state
CSST_FAILED	Failure state

CStatus Return Values:

CF_OK
CF_ERR_PATHNAME
CF_ERR_CCB
CF_ERR_AVCB
CF_ERR_TOO_MANY_CAPTURE
CF_ERR_CALLBACK
CF_ERR_FIELD
CF_ERR_STATE
CF_ERR_CARDINFO
CF_ERR_STRGRP
CF_ERR_FFORMAT
CF_ERR_HANDLE
CF_ERR_PHONE#
CF_ERR_TIMEOUT
CF_ERR_INSUFF_BUFSIZE
CF_ERR_CALL
CF_ERR_RESOURCE_FAIL

In the above return values, CF_ERR_xxx means that the "xxx" parameter is invalid.

The functions utilized by conferencing API 506 are defined as follows:

CF_Init

This function reads in the conferencing configuration parameters (e.g., directory names in which the conferencing system software

HUAWEI EX. 1016 - 593/714

are kept) from an initialization file (e.g., c:\cyborg\vconf.ini), loads and initializes the software of video, comm., and audio subsystems. In addition, this function acquires the phone resource that no other applications can access the resource until this application makes a call to CF_Uninit later to relinquish the phone resource.

Also, it allows the application to choose between the messaging and the callback interfaces to return the event notifications. The callback interface allows the conferencing software to call a user designated function to notify the application of incoming events. The messaging interface allows the conferencing to notify the application of incoming events by posting messages to application message queues. The parameters to the function varying depending on the notification method chosen.

```
CStatus CF_Init(    LPSTR          lpIniFile,
          LPADDR          lpLocalAddr,
          LPCONN_CHR      lpConnAttributes,
          WORD       wFlag,
          CALLBACK        cbAppCall,
          LPCCB           lpCcb)
input     lpIniFile:      the pathname to the conferencing INI
                          file.

lpLocalAddr:   pointer to the local  address

lpConnAttributes    pointer to the attributes requested for
                    incoming calls

wFlag:          Indicates the type of notification to be used:
          CALLBACK_FUNCTION   for callback interface
          CALLBACK_WINDOW     for post message interface

cbAppCall:      the callback routine or the message interface to
                return the notifications from the
          remote site to the application.

output
lpCcb:          returns the handle to the configuration control
                block, preallocated by the
          application that contains the configuration
          information.

Valid state(s) to issue:
     Null State

State after execution:
     CCST_IDLE
```

HUAWEI EX. 1016 - 594/714

Return values:
CF_OK
CF_ERR_PATHNAME
CF_ERR_CCB
CF_ERR_CALLBACK
CF_ERR_RESOURCE_FAIL
CF_ERR_ALREADY_INITIALIZED

Callback routine:
FuncName (WORD wMessage, WORD wParam, LONG lParam)

wMessage: the Window message type (e.g., CFM_XXXX_NTFY)
wParam: the Call Handle
lParam: additional Information which is message-specific

NOTE: the parameters of the callback function are equivalent to the last three parameter passed to a Window message handler function (Win 3.1).

CF_Uninit

This function writes out the conferencing configuration parameters back to the initialization file (e.g., c:\cyborg\vconf.ini), unloads and uninitializes the software of video, comm., and audio subsystems. In addition, this function relinquishes the phone resource ~~aquired~~ acquired with CF_Init.

CStatus CF_Uninit (LPCCB lpCcb)
input
lpCcb: the handle to the configuration control block that contains the configuration information.

Valid state(s) to issue:
CCST_IDLE

State after execution:
CCST_NULL

Return values:
CF_OK
TBD

Status Message:
CFM_UNINIT_NTFY: UnInit complete.

Communication

HUAWEI EX. 1016 - 595/714

Call Management
The Call Management functions will provide the application the ability to establish and manage calls/connections to its peers on the network.

CF_MakeCall

This function makes a call to the remote site to establish a call/connection for the video conferencing. This call will be performed asynchronously.

After all related operations for CF_MakeCall is eventually complete, the callback routine (or the message) specified in the CF_Init function will return the status of this call.

The peer application will receive a CFM_CALL_NTFY callback/message as a result of this call.

```
CStatus CF_MakeCall (   LPADDR              lpAddress,
                        LPCONN_CHR          lpConAttributes,
                        LPABBUSCARDINFO     lpabCardInfo,
                        WORD                TimeOut,
                        LPMTYPE             lpMedia)
```

input

lpAddress: pointer to the address structure of the destination (or Callee),.

lpConnAttributes pointer to the attributes requested for the call.

lpabCardInfo: pointer to business card information of the caller.

wTimeOut: Number of seconds to wait for peer to pickup the phone.

lpMedia: pointer to a list of desirable media types. If a null pointer is specified, the default (best possibility) will be selected.

Valid state(s) to issue:
CCST_IDLE

State after execution:
CCST_CALLING

Return values:
CF_OK
CF_ERR_STATE
CF_ERR_HANDLE
CF_ERR_RESOURCE_FAIL

HUAWEI EX. 1016 - 596/714

Peer Messages:
A **CFM_CALL_NTFY** message will be delivered to the remote site to indicate the call request.

Status Messages:

CFM_ACCEPT_NTFY:	The peer process has accepted the call
CFM_PROGRESS_NTFY:	The optional progress information of the call
CF_PROG_DIAL_TONE CF_PROG_DIALING CF_PROG_RINGBACK	
CFM_REJECT_NTFY:	The error reported for the call
CF_REJ_TIMEOUT CF_REJ_ADDRESS CF_REJ_NETWORK_BUSY CF_REJ_STATION_BUSY CF_REJ_RESOUCE_FAIL	

CF_AcceptCall

This function is issued to accept a call request, received as part of the **CFM_CALL_NTFY** callback/message, that was initiated from the peer.

Both sides will receive a **CFM_ACCEPT_NTFY** callback/message as a result of this call.

```
CStatus CF_AcceptCall (  HCALL              hCall,
                         LPABBUSCARDINFO    lpabCallee,
                         LPMTYPE            lpMedia)
```

input

hCall: handle to the call (returned by the **CFM_CALL_NIFY** message).

lpabCallee: pointer to ABBUSCARDINFO of the callee who issues this function.

lpMedia: pointer to a list of desirable media types. If a null pointer is specified, the default (best possibility) will be selected.

Valid state(s) to issue:
CCST_CALLED

State after execution:
CCST_ACCEPTING

HUAWEI EX. 1016 - 597/714

Return values:
CF_OK
CF_ERR_STATE
CF_ERR_CARDINFO
CF_ERR_HANDLE
CF_ERR_RESOURCE_FAIL

Peer Messages:
A **CFM_ACCEPT_NTFY** message will be received by the remote site.

Status Messages:
A **CFM_ACCEPT_NTFY** message will be received by the accepting site.

CF_RejectCall

Upon receiving a **CFM_CALL_NTFY** message, this function can be issued to reject the incoming call request. In fact, this function neither picks up the incoming call, nor sends a rejection message to the remote. Instead, it will simply ignore the call notification and let the peer application time-out. This would avoid the unnecessary telephone charge or the ~~unpleasant~~ unpleasant rejection to the caller.

The peer application will receive a **CFM_TIMEOUT_NTFY** callback/message as a result of this call.

CStatus CF_RejectCall (HCALL hCall)
input
hCall: handle to the call (returned by the **CFM_CALL_NOTIFY** message).

Valid state(s) to issue:
CCST_CALLED

State after execution:
CCST_IDLE

Return values:
CF_OK
CF_ERR_STATE
CF_ERR_RESOURCE_FAIL

Peer Messages:
A **CFM_REJECT_NTFY** message will be resulted to the remote app

Status Messages:
none

HUAWEI EX. 1016 - 598/714

CF_HangupCall

This function hangs up a call that was previously established. It releases all system resources, including all types of streams, channels, and data structures, allocated during this call.

CStatus CF_HangupCall (HCALL hCall)
input
hCall: handle to the call

Valid state(s) to issue:
CCST_CONNECTED

State after execution:
CCST_CLOSING

Return values:
CF_OK
CF_ERR_STATE
CF_ERR_RESOURCE_FAIL

Peer Message:
A **CFM_HANGUP_NTFY** message will be delivered to the remote site.

Status Message:
A **CFM_HANGUP_NTFY** message will be delivered to the local site when the Hangup is complete.

CF_GetCallInfo

This function returns the current status information of the specified call.

```
CStatus CF_GetCallInfo ( HCALL              hCall,
                         LPCONN_CHR         lpConnAttributes,
                         LPWORD             lpwState,
                         LPMTYPE            lpMedia
                         LPABBUSCARDINFO    lpabCardInfo)
```

input
hCall: handle to the call

output
lpwState: current call state

lpConnAttributes: Connection Attributes

lpMedia: a list of selected media types used for this call. Note that this list can be different from the desired list.

HUAWEI EX. 1016 - 599/714

lpabCardInfo: peer's business card information

Valid state(s) to issue:
all call states

State after execution:
unchanged

Return values:
CF_OK
CF_ERR_RESOURCE_FAIL
CF_ERR_HANDLE

Channel Management
These Channel Management functions will provide the application the ability to establish and manage virtual channels to its peers on the network.

CF_RegisterChanMgr

This function registers a callback or an application window whose message processing function will handle notifications generated by network channel initialization operations. This function must be invoked before any CF_OpenChannel calls are made.

```
CStatus CF_RegisterChanMgr (  HCALL          hCall,
                              WORD           wFlag,
                              CALLBACK       cbNetCall)
```

input
hCall: handle to the call

wflag: Indicates the type of notification to be used:
CALLBACK_FUNCTION for callback interface
CALLBACK_WINDOW for post message interface

cbNetCall: Either a pointer to a callback function, or a window handle to which messages will be posted, depending on flags.

Valid state(s) to issue:
call state
CCST_CONNECTED

State after execution:
call state
CCST_CONNECTED

Return values:
CF_OK
CF_ERR_HANDLE

HUAWEI EX. 1016 - 600/714

Callback routine format:
FuncName(UINT Message, WPARAM wparam, LPARAM lparam)

Message: The message type
wParam: Word parameter passed to function
lParam: Long parameter passed to function

NOTE: the callback function parameters are equivalent to the second, third, as fourth parameters that are delivered to a Window message handler function (Win 3.1).

Status Messages: none
Peer Messages: none

CF_OpenChannel

This routine requests to open a network channel with the peer application. The result of the action is given to the application by invoking the callback routine specified by the call to CF_RegisterChanMgr. The application must specify an ID for this transaction. This ID is passed to the callback routine or posted in a message.

Note that the channels to be opened by the CF_OpenChannel call is always "write-only", whereas the channels to be opened by the CF_AcceptChannel call is always "read-only".

CStatus CF_OpenChannel(HCALL hCall, LPCHAN_INFO lpChan, DWORD dwTransID)
input
hCall: handle to the call.
lpChan: Pointer to a channel structure. Filled by application.
The structure contains:
- A channel number.
- Priority of this channel relative to other channels on this connection. Higher numbers represent higher priority.
- Timeout value for the channel
- Reliability of the channel.
- Channel specific information. See CHAN_INFO definition in TII.

dwTransID: An application defined identifier that is returned with status messages to identify the channel request that the message belongs to.

Valid state(s) to issue:
call state
CCST_CONNECTED

HUAWEI EX. 1016 - 601/714

channel state
CHST_READY

State after execution:
call state
CCST_CONNECTED

channel state
CHST_OPENING

Return values:
CF_OK
CF_ERR_HANDLE
CF_ERR_STATE
CF_ERR_PRIORITY
CF_ERR_NO_CHANMGR
CF_ERR_CHAN_NUMBER
CF_ERR_CHAN_INUSE

Status Messages:

CFM_CHAN_ACCEPT_NTFY:	The peer process has accepted request.
CFM_CHAN_REJECT_NTFY:	The Peer process has rejected request.
CFM_CHAN_TIMEOUT_NTFY:	No answer from peer

Peer Messages:
CFM_CHAN_OPEN_NTFY:

CF_AcceptChannel

A peer application can issue AcceptChannel in response to a CFM_CHAN_OPEN_NTFY (OpenChannel) message that has been received. The result of the AcceptChannel call is a one-way network channel for receiving data.

Note that the channels to be opened by the CF_OpenChannel call is always "write-only", whereas the channels to be opened by the CF_AcceptChannel call is always "read-only".

CStatus CF_AcceptChannel(HCHAN hChan, DWORD dwTransID)
input

hChan:	handle to the channel
dwTransID:	A user defined identifier that was received as part of the CFM_CHAN_OPEN_NTFY message.

Valid state(s) to issue:
call state
CCST_CONNECTED

HUAWEI EX. 1016 - 602/714

channel state
CHST_RESPONDING

State after execution:
call state
CCST_CONNECTED

channel state
CHST_OPEN

Return values:
CF_OK
CF_ERR_HANDLE
CF_ERR_STATE
CF_ERR_CHAN_NUM

Status Messages: none
Peer Messages:
CFM_CHAN_ACCEPT_NTFY The TransID is sent in lParam.

CF_RejectChannel

This routine rejects an CFM_CHAN_OPEN_NTFY from the peer.

CStatus CF_RejectChannel(HCHAN hChan, DWORD dwTransID)
input
hChan: Handle to the channel.
dwTransID: A user defined identifier that was receive as part of the CFM_CHAN_OPEN_NTFY message.

Valid state(s) to issue:
call state
CCST_CONNECTED

channel state
CHST_RESPONDING

State after execution:
call state
CCST_CONNECTED

channel state
CHST_READY

HUAWEI EX. 1016 - 603/714

Return values:
CF_OK
CF_ERR_HANDLE
CF_ERR_STATE
CF_ERR_CHAN_NUM

Status Messages: none
Peer Messages:
CFM_CHAN_REJECT_NTFY The TransID is sent as lParam.

CF_RegisterChanHandler

This function registers a callback or an application window whose message processing function will handle notifications generated by network channel IO activities. The channels that are opened will receive CFM_DATA_SENT_NTFY, and the accepted channels will receive CFM_RECV_COMPLTE_NTFY.

CStatus CF_RegisterChanHandler(HCHAN hChan, WORD wFlag, CALLBACK cbChanHandleCall)
input
hChan: handle to the channel.
wFlag: Indicates the type of notification to be used:
CALLBACK_FUNCTION for callback interface
CALLBACK_WINDOW for post message interface
NOCALLBACK for polled status interface.

cbChanHandleCall:
Either a pointer to a callback function, or a window handle to which messages will be posted, depending on flags.

Valid state(s) to issue:
call state
CCST_CONNECTED

channel state
CHST_OPEN

State after execution:
call state
CCST_CONNECTED

channel state
CHST_SEND (FOR OUTGOING CHANNEL)
CHST_RECV (FOR INCOMING CHANNEL)

HUAWEI EX. 1016 - 604/714

Return values:
CF_OK
CF_ERR_HANDLE
CF_ERR_STATE
CF_ERR_CHAN_NUMBER

Callback routine format:
FuncName(UINT Message, WPARAM wParam, LPARAM lParam)

Message: The message type
wParam: Word parameter passed to function
lParam: Long parameter passed to function (TransID)

NOTE that the callback function parameters are equivalent to the second, third, as fourth parameters that are delivered to a Window message handler function (Win 3.1).

Status Messages: none

Peer Messages: none

CF_CloseChannel

This routine will close a network channel that was opened by CF_AcceptChannel or CF_OpenChannel. The handler for this channel is automatically de-registered.

CStatus CF_CloseChannel(HCHAN hChan, DWORD dwTransID)
input
hChan: handle to the Channel to be closed.

dwTransID: An application defined identifier that is returned with the response notification.

Valid state(s) to issue:
call state
CCST_CONNECTED

channel state
CHST_SEND, CHST_RECV, CHST_OPEN

State after execution:
call state
CCST_CONNECTED

channel state
CHST_CLOSING

HUAWEI EX. 1016 - 605/714

Return values:
CF_OK
CF_ERR_HANDLE
CF_ERR_STATE

Status Messages:
CFM_CHAN_CLOSE_NTFY:
Peer Messages:
CFM_CHAN_CLOSE_NTFY:

Data Exchange

All the data communication is done in "message passing" fashion. This means that any send will satisfy any receive on a specific channel, regardless of the length of the sent data and the receive buffer length. If the length of the sent message is greater than the length of the posted receive buffer the data will be truncated.

All these calls are "asynchronous", which means that the data in the send buffer must not be changed until a CFM_DATA_SEND_NTFY notification has been sent to the application, and the contents of receive buffer is not valid until a CFM_RECV_COMPLETE_NTFY has been received for that channel.

CF_SendData

Send data to peer. If there are no receive buffers posted on the peer machine, the data will be lost.

CStatus CF_SendData(HCHAN hChan, LPSTR lpsBuffer, WORD Buflen, DWORD dwTransID)
input

hChan:	Handle to the channel.
lpsBuffer:	A pointer to the buffer to be sent.
Buflen:	The length of the buffer in bytes.
dwTransID:	This is a user defined transaction ID which will be passed to the channel handler along with other status message data to identify the transaction that the response belongs to.

Valid state(s) to issue:
call state
CCST_CONNECTED

channel state
CHST_SEND

HUAWEI EX. 1016 - 606/714

State after execution:
call state
CCST_CONNECTED

channel state
CHST_SEND

Return values:
CF_OK.
CF_ERR_CHAN_NUMBER
CF_ERR_STATE
CF_CHAN_TRAN_FULL (Channel transaction table full)

Status Messages:
CFM_DATA_SENT_NTFY
Tells the application that the data has been extracted from the buffer and it is available for reuse.

CFM_DATA_LOST_NTFY
This message will be delivered to the caller if the data could not be sent.

Peer Messages:
CFM_RECV_COMPLETE_NTFY
indicates that data was received.

CFM_CHAN_DATA_LOST_NTFY
this message will be delivered to the peer if there are no RecvData calls pending.

CF_RecvData

Data is received through this mechanism. Normally this call is issued in order to post receive buffers to the system. When the system has received data in the given buffers, the Channel Handler will receive a CFM_RECV_COMPLETE_NTFY.

CStatus CF_RecvData(HCHAN hChan, LPSTR lpsBuffer, WORD Buflen, DWORD dwTransID)

input

hChan:	Handle to the channel
lpsBuffer:	A pointer to the buffer to be filled in.
Buflen:	The length of the buffer in bytes. Max. bytes to receive.
dwTransID:	This is a user defined transaction ID which will be passed to the channel handler along with other status message to identify the transaction that the response belongs to.

HUAWEI EX. 1016 - 607/714

Valid state(s) to issue:
call_state
CCST_CONNECTED

channel_state
CHST_RECV

State after execution:
call_state
CCST_CONNECTED

channel_state
CHST_RECV

Return values:
CF_OK
CF_ERR_CHAN_NUMBER
CF_ERR_STATE
CF_CHAN_TRAN_FULL (Channel transaction table full)

Status Messages:
CFM_RECV_COMPLETE_NTFY
indicates that data was received.

CFM_CHAN_DATA_LOST_NTFY
indicates that the buffer was too small for an incoming data message, or some other data error. The contents of the data buffer are undefined.

Peer Messages:
none

Communication Control & Statistics

CF_Get

ChanInfo
This function will return various statistical information about a channel. For examples: Bandwidth information, number of sends/second, number of receives/second, etc. Full set of statistical information will be defined at a later time.

CStatus CF_GetChanInfo(HCHAN hChan, LPCHAN_INFO lpCsInfo)

input
hChan: Handle to the specified Channel
lpCsInfo: Pointer to a CHAN_INFO struct.

HUAWEI EX. 1016 - 608/714

Valid state(s) to issue:
call state
CCST_CONNECTED

channel state
Any except CHST_NULL, CHST_READY

State after execution:
call state
CCST_CONNECTED

channel state
UNCHANGED

Return values:
CF_OK
CF_ERR_CHAN_NUMBER

Status Messages: none

Peer Messages: none

Capture, Record, & Playback

These "convenience" calls will provide the application the ability to capture, record, and playback the audio/video streams from the specified source (e.g., from the local Audio/Video HW or from the Network) and/or to the specified sync (e.g., local Audio/Video HW, File, or Network).

CF_CapMon

This function starts the capture of video signals from the local camera and displays them (via the HW "monitor" function) in the local_video_window which is pre-opened by the application. Also, it starts the capture of audio signals from the local microphone and plays them back through the local speaker. Note that as part of the capture function, this "monitor" function is slightly different from the "play" function described later in "CF_PlayRcvd" and "CF_PlayStream". The "monitor" function is a low-overhead display operation supported by the Video hardware that moves uncompressed digital video from camera to the monitor screen. Therefore, this function only works for local video stream. For the remote video stream received from the network, the "Play" function must be used to display it on the screen (see later section for more details). Also, the monitor function can be turned on/off later using CF_ControlStream calls.

HUAWEI EX. 1016 - 609/714

This function allows the user to preview his/her appearance and sound before sending the signals out to the remote.

CStatus CF_CapMon (HWND hWnd, LPHSTGRP lphStgrp, lpAInfo, lpVInfo)

input

hWnd:	handle to the local_video_window pre-opened by the application
lpAInfo:	Pointer to AINFO structure describing Audio stream attributes
lpVInfo:	Pointer to VINFO structure describing Video stream attributes

output

lphStgrp:	pointer to the handle of a stream group to be captured

Valid state(s) to issue:
CSST_INIT

State after execution:
CSST_ACTIVE

Return values:
CF_OK
CF_ERR_TOO_MANY_CAPTURE
CF_ERR_HANDLE
CF_ERR_RESOURCE_FAIL

CF_PlayRcvd

This function starts the reception and display (via the software "Play" function) of remote video signals in the remote_video_window which is pre-opened by the application. Also, it starts the reception and play of remote audio signals back through the local speakers. The "Play" function that is automatically invoked as part of this function can be later turned on/off by the application by issuing calls to CF_PlayStream.

Note that the call can only be correctly issued after the phone connection is made. Otherwise, "CF_ERR_STATE" will be returned by the call. Also,

CStatus CF_PlayRcvd (HWND hWnd, HCALL hCall, LPHSTGRP lphStgrp)

input

hWnd:	handle to the remote_video_window pre-opened by the application
hCall:	handle to the call
lpAInfo:	Pointer to AINFO structure describing Audio stream attributes
lpVInfo:	Pointer to VINFO structure describing Video stream attributes

HUAWEI EX. 1016 - 610/714

output
lphStgrp: pointer to the handle to a stream group to be received

Valid state(s) to issue:
CCST_CONNECTED & CSST_INIT

State after execution:
CCST_CONNECTED & CSST_ACTIVE

Return values:
CF_OK
CF_ERR_HANDLE
CF_ERR_STATE
CF_ERR_RESOURCE_FAIL

CF_PlayStream

This function starts or stops playing the captured video and audio streams of a specified stream group.

CStatus CF_PlayStream (HWND hWnd, HSTGRP hStgrp, Word wFlag)
input
hWnd: handle to the "Play" window pre-opened by the application
hStgrp: handle to the stream group
wFlag : start/stop flag

Valid state(s) to issue:
CSST_ACTIVE

State after execution:
CSST_ACTIVE

Return values:
CF_OK
CF_ERR_STATE
CF_ERR_STRGP
CF_ERR_HANDLE
CF_ERR_RESOURCE_FAIL

CF_RecordStream

This function starts or stops recording the captured video and audio streams of a specified stream group into a specified file. Currently, the only supported file format is AVI File. Also, recording streams in a file will overwrite, instead of append, to an existing file.

HUAWEI EX. 1016 - 611/714

CStatus CF_RecordStream (HSTGRP hStgrp, Word wFormat, Word wFlag, LPSTR lpFile)

input

hStgrp:	handle to the stream group
wFormat:	the file format for recording
wFlag :	start/stop flag
lpFile:	the pathname to the AVI file to record the A/V streams

Valid state(s) to issue:
CSST_ACTIVE

State after execution:
CSST_ACTIVE

Return values:
CF_OK
CF_ERR_STATE
CF_ERR_STRGP
CF_ERR_RESOURCE_FAIL
CF_ERR_FILE

Stream Control & Status

These "convenience" calls will provide the application the ability to control and obtain the status information of the specified stream group.

CF_ControlStream

This function set the parameters to control the **capture** or **playback** functions of the local or remote video and audio stream groups.

CStatus CF_ControlStream (HSTGRP hStgrp, WORD wfield, LPAVCB lpAvcb)

input

hStgrp:	handle to a stream group
wfield:	field of the AVCB to be modified, the valid fields for local and remote AVCB are listed below: TBD
lpAvcb:	Pointer to the AVCB

Valid state(s) to issue:
all states except CSST_INIT

State after execution:
unchanged

HUAWEI EX. 1016 - 612/714

Return values:
CF_OK
CF_ERR_FIELD
CF_ERR_STRGP
CF_ERR_STATE
CF_ERR_RESOURCE_FAIL

CF_GetStreamInfo

This function returns the current state and the AVCB, preallocated by the application, of the specified stream groups.

CStatus CF_GetStreamInfo (LHSTGRP hStgrp, ~~LPWORD~~ LPWORD lpwState, LPAVCB lpAvcb)

input
hStgrp: handle to a stream group

output
lpwState: return current application state
lpAvcb: return the pointer to the AVCB preallocated by the application.

Valid state(s) to issue:
all states

State after execution:
unchanged

Return values:
CF_OK
CF_ERR_RESOURCE_FAIL

CF_DestroyStream

This function destroys the specified stream group that was created by CF_CapMon or CF_PlayRcvd. As part of the destroy process, all operations (e.g., sending/playing) being performed on the stream group will be stopped and all allocated system resources will be freed.

CStatus CF_DestroyStream (HSTGRP hStgrp)

input
hStgrp: handle to a stream group to be destroyed

Valid state(s) to issue:
All stream states except CSST_INIT

State after execution:
CSST_INIT

HUAWEI EX. 1016 - 613/714

Return values:
CF_OK
CF_ERR_STGRP

Network Linking

These "convenience" calls will provide the application the ability to start/stop sending active captured audio/video streams to the network.

CF_SendStream

This function starts or stops sending the captured video and audio streams of a specified stream group to the remote.

CStatus CF_SendStream (HCALL hCall, HSTGRP hStgrp, Word wFlag)
input
hCall : handle to the call
hStgrp: handle to the stream group
wFlag : start/stop flag

Valid state(s) to issue:
CSST_ACTIVE

State after execution:
CSST_ACTIVE

Return values:
CF_OK
CF_ERR_STATE
CF_ERR_STRGP
CF_ERR_CALL
CF_ERR_RESOURCE_FAIL

CF_Mute

This function stops or resumes sending the captured video and audio streams of a specified stream group to the remote site.

CStatus CF_Mute (HCALL hCall, HSTGRP hStgrp, Word wFlag)
input
hCall : handle to the call
hStgrp: handle to the stream group
wFlag : start/stop flag

Valid state(s) to issue:
CSST_ACTIVE

HUAWEI EX. 1016 - 614/714

State after execution:
CSST_ACTIVE

Return values:
CF_OK
CF_ERR_STATE
CF_ERR_STRGP
CF_ERR_CALL
CF_ERR_RESOURCE_FAIL

Frame Grabbing

CF_SnapStream

This function takes a snapshot of the video stream of the specified stream group and returns a still image (reference) frame in a buffer allocated by the VCI DLL to the application. Currently, the only supported image format is DIB.

CStatus CF_SnapStream (HSTGRP hStgrp, WORD wFormat, LPDWORD lpdwbufsize, LPBITMAPINFO lpDib)

input
hStgrp: handle to a stream group
wFormat: still image format)

output
lpdwbufsize: size of the returned buffer.
lpDib: pointer to the DIB buffer allocated by the VCI DLL.

Valid state(s) to issue:
CSST_ACTIVE

State after execution:
unchanged

Return values:
CF_OK
CF_ERR_STATE
CF_ERR_STRGP
CF_ERR_BUFFER
CF_ERR_INSUFF_BUFSIZE
CF_ERR_RESOURCE_FAIL

The messages utilized by conferencing API 506 are defined as follows:

HUAWEI EX. 1016 - 615/714

This section describes the messages generated by VCI and the parameters that are passed along with them.

Call Messages

CFM_CALL_NTFY

This is a notification message that the system has just received a call request initiated from the remote site.

CFM_CALL_NTFY

Returned Parameters

wParam	HCALL	handle to the call. This handle should be used to accept/reject the call.

lParam	LPV_CBACK	pointer to a structure containing incoming call info:
		{
		LPADDR — Pointer to address of Caller
		LPCONN_CHR — Pointer to Connection Attributes
		}

Valid Call States To Receive the Notification:
CCST_IDLE

State after receiving the message:
CCST_CALLED

CFM_PROGRESS_NTFY

This is a notification message that returns the status of the call in progress from the phone system.

CFM_PROGRESS_NTFY

Returned Parameters

wParam	HCALL	handle to the call in progress
lParam	DWORD	substate of the call

Valid wSubstate values:
CF_PROG_DIAL_TONE
CF_PROG_DIALING
CF_PROG_RINGBACK

HUAWEI EX. 1016 - 616/714

Valid Call States To Receive the Notification:
CCST_CALLING

State after receiving the message:
CCST_CALLING

CFM_ACCEPT_NTFY

The remote site has accepted the call request issued locally.

CFM_ACCEPT_NTFY

Returned Parameters

wParam	HCALL	handle to the call.	
lParam	LPV_CBACK	pointer to a structure containing call info:	
		{	
		LPCONN_CHR	Pointer to Connection Attributes
		LPABBUSCARDINFO	Pointer to BusinessCard info of peer
		LPMTYPE	Pointer to Media Types structure
		}	

Valid Call States To Receive the Notification:
CCST_ACCEPTING/CCST_CALLING

State after receiving the message:
CCST_CONNECTED

CFM_REJECT_NTFY

The connection/call can not be made due to the situation described in the substates.

CFM_REJECT_NTFY

Returned Parameters

lParam	DWORD	substate of the call

Valid wSubstate values:
CF_REJ_TIMEOUT
CF_REJ_ADDRESS
CF_REJ_NETWORK_BUSY
CF_REJ_STATION_BUSY
CF_REJ_RESOUCE_FAIL

HUAWEI EX. 1016 - 617/714

Valid Call States To Receive the Notification:
CCST_CALLING

State after receiving the message:
CCST_IDLE

CFM_HANGUP_NTFY

The remote site has hung up the call, or this is a response to a locally initiated Hangup.

CFM_HANGUP_NTFY

Returned Parameters

wParam	HCALL	handle to the call

Valid Call States To Receive the Notification:
CCST_CONNECTED and CCST_CLOSING

State after receiving the message:
CCST_IDLE

Channel Messages

The following messages are generated in response to the various channel related functions as described with the function definitions.

CFM_CHAN_ACCEPT_NTFY

This is a notification message indicating that the peer has accepted the Open Channel request (via issuing a CF_Accept_Channel call).

CFM_CHAN_ACCEPT_NTFY

Returned Parameters

wparam	HCHAN	Handle to the channel to be used subsequently by the application.
lParam	DWORD	TransID provided by the application, that identifies the application transaction related to this notification.

Valid States To Receive the Notification:
call state
CCST_CONNECTED

HUAWEI EX. 1016 - 618/714

channel_state
CHST_OPENING

State after receiving the message:
call_state
CCST_CONNECTED

channel_state
CHST_OPEN

CFM_CHAN_REJECT_NTFY

This is a notification message indicating that the peer has rejected the Open Channel request (via issuing a CF_RejectChannel).

CFM_CHAN_REJECT_NTFY

Returned Parameters

lParam	DWORD	Trans ID provided by the application, that identifies the application transaction related to this notification.

Valid States To Receive the Notification:
call_state
CCST_CONNECTED

channel_state
CHST_OPENING

State after receiving the message:
call_state
CCST_CONNECTED

channel_state
CHST_READY

CFM_CHAN_TIMEOUT_NTFY

This is a notification message indicating that the peer has failed to answer the Open Channel request before the local timer expires.

CFM_CHAN_TIMEOUT_NTFY

HUAWEI EX. 1016 - 619/714

Returned Parameters

lParam	DWORD	TransID provided by the application, that identifies the application transaction related to this notification.

Valid States To Receive the Notification:

call state
CCST_CONNECTED

channel state
CHST_OPENING

State after receiving the message:

call state
CCST_CONNECTED

channel state
CHST_READY

CFM_CHAN_OPEN_NTFY

This is a notification message indicating that the peer has initiated an Open Channel request (via issuing a CF_Open_Channel call).

CFM_CHAN_OPEN_NTFY

Returned Parameters

wParam	HCHAN	Handle to the Channel to be used subsequently by the application.

lParam	LPV_CBACK	Pointer to info about incoming channel request
		{
		DWORD — TransId (to be used in Accept/Reject Channel)
		HCALL — Handle to Connection
		LPCHAN_INFO — Channel Info passed by peer
		}

Valid States To Receive the Notification:

call state
CCST_CONNECTED

channel state
CHST_READY

HUAWEI EX. 1016 - 620/714

State after receiving the message:
call state
CCST_CONNECTED

channel state
CHST_RESPONDING

CFM_CHAN_CLOSE_NTFY

This is a notification message indicating that the peer has initiated a Close Channel request (via issuing a CF_Close_Channel call). This may also be in response to a locally initiated Close Channel.

CFM_CHAN_CLOSE_NTFY

Returned Parameters

wParam	HCHAN	Handle to the Channel
lParam	DWORD	If the callback is a remote Close indication, lParam = 0 If the callback is a response to a locally initiated CloseChannel lParam = TransID specified by app.

Valid States To Receive the Notification:
call state
CCST_CONNECTED

channel state
CHST_SEND, CHST_RECV, CHST_OPEN

State after receiving the message:
call state
CCST_CONNECTED

channel state
CHST_READY

CFM_DATA_SENT_NTFY

This is a notification message indicating that the data in the buffer has been sent out (via the previous call to the CF_Send_Data). The data buffer used in the CF_Send_Data is now available for reuse.

CFM_DATA_SENT_NTFY

HUAWEI EX. 1016 - 621/714

Returned Parameters

wParam	WORD	The actual number of bytes sent.
lParam	DWORD	TransID provided by the application, that identifies the application transaction related to this notification.

Valid States To Receive the Notification:
call state
CCST_CONNECTED

channel state
CHST_SEND

State after receiving the message:
call state
CCST_CONNECTED

channel state
CHST_SEND

CFM_RCV_COMPLETE_NTFY

This is a notification message indicating that the system has received data in the buffer posted by the application (via issuing CF_RecvData calls).

CFM_RCV_COMPLETE_NTFY

Returned Parameters

wParam	WORD	The actual number of bytes received
lParam	DWORD	TransID provided by the application, that identifies the application transaction related to this notification.

Valid States To Receive the Notification:
call state
CCST_CONNECTED

channel state
CHST_RECV

State after receiving the message:
call state
CCST_CONNECTED

channel state
CHST_RECV

HUAWEI EX. 1016 - 622/714

CFM_DATA_LOST_NTFY

This is a notification message indicating that the data sent is lost because the peer had no data buffers available to receive it. This message will be delivered to both the sender and the receiver applications.

CFM_DATA_LOST_NTFY

Returned Parameters

wParam	WORD	Number of bytes lost
lParam	DWORD	TransID provided by the application, that identifies the application transaction related to this notification.

Valid States To Receive the Notification:

call state
CCST_CONNECTED

channel state
CHST_SEND
CHST_OPEN

State after receiving the message:

call state
CCST_CONNECTED

channel state
UNCHANGED

Video API Data Structures, Functions, and Messages

Video API 508 utilizes the following data types:

VSTATUS	Video subsystem interface return status type. WORD (16-bit) value.
HVSTRM	Handle to a video stream
LPHVSTRM	Pointer to the handle to a video stream
LPVINFO	Pointer to a video information (VINFO) structure
HVCCB	Handle to the Video Configuration Control Block (VCCB)
LPCHANID	Pointer to the network channel ID (CHANID)

HUAWEI EX. 1016 - 623/714

Video API 508 utilizes the following structures:

3.1.2. Structure Types

VINFO (Video Stream Information)

```
»    WORD       wType              Local or remote video
                                   stream
»    WORD       wReserved          DWORD alignment, future
                                   use
»    DWORD      dwFlags            Flags bits: various
                                   exclusive attributes
»    WORD       wContrast          Contrast adjustment
»    WORD       wTint              Color adjustment
»    WORD       wSaturation        Saturation value
»    WORD       wBrightness        Brightness adjustment
»    WORD       wDisplayRate       Monitor/Playback window
                                   Blt rate; <= IRV frame
                                   rate
»    WORD       wReserved2         DWORD alignment, future
                                   use
»    Union {
»      // local video stream
»    struct {
»    WORD       wCaptureSource     Video capture source
»                                        (placeholder)
»    WORD       wCaptureFormat     Video capture format
»                                        (IRV, YUV-9, etc.)
»    DWORD      wCaptureDriver     Four CC code
»    WORD       wDataRate          Maximum  video data rate
                                        (kbits/sec)
»    WORD       wMaxFrameRate      1-30
»    WORD       wQualityPercent         0-100; 0 = Lowest
                                        quality, least
»                                       number of frames
»                                       dropped; 100 =
»                                       Highest quality,
»                                       most number of
»                                       frames dropped
»     } local
»      // remote video stream
»     struct {
»    WORD       wPlaybackTarget         Video playback
»                                       hardware
»                                            (placeholder)
»    WORD       wReserved               Alignment, future
»                                       use
»    } remote
»
»    HASTRM     hAStrm                  Associated audio
»                                       stream, as needed
»    }
```

HUAWEI EX. 1016 - 624/714

Video API 508 utilizes the following constants:

Constants

State values:

VST_INIT	Init state
VST_OPEN	Open state
VST_CAPTURE	Capture state
VST_PLAY	Play state
VST_LINKIN	Link In state
VST_LINKOUT	Link Out state
VST_ERROR	Error state

Status Values

V_OK	for successful return (=0)
V_ERR	general error occurred in the system
V_ERR_VINFO	invalid VINFO
V_ERR_HWND	invalid window handle
V_ERR_STATE	invalid stream state to issue this function
V_ERR_HVSTRM	invalid stream handle
V_ERR_CHANID	invalid network channel
V_ERR_RSCFAIL	system resource failure
V_ERR_FLAG	duplicated operation or invalid flag
V_ERR_FIELD	invalid VINFO field

The functions utilized by video API 508 are defined as follows:

VOpen

This function opens a video stream. An info structure specifies stream attributes. Caller specifies window messages or callback function for stream event notification. Stream event notification is TBD.

```
VSTATUS VOpen (LPVINFO lpVInfo, LPHVSTRM lphVStrm, DWORD
dwCallback,
          DWORD dwCallbackInstance, DWORD dwFlags,
          int far * lpwField)
```

input

lpVinfo: pointer to the video information structure, VINFO, with specified attributes. If a **NULL** LPVINFO is specified, the default attributes set up as part of configuration will be used.

dwCallback: Specifies the address of a callback function or a handle to a window. In the case of a window, the low-order word is used.

HUAWEI EX. 1016 - 625/714

Messages sent to a callback function are similar to messages sent to a window, except they have two DWORD parameters instead of a UINT and a DWORD parameter. See the Microsoft Multimedia Programmer's Guide, pp. 5-10 for guidelines in writing a callback function.

dwCallbackInstance:
Specifies user instance data passed to the callback. Unused if dwCallback is a window.

dwFlags: VOpen flags parameter; flag values OR'd into parameter.
For parameter dwCallback, values are:
CALLBACK_FUNCTION indicates callback function used.
CALLBACK_WINDOW indicates window handle.

output

VSTATUS: returned parameter; see return values, below.

lphVstrm: pointer to an opened video stream handle, returned if VSTATUS=V_OK.

lpwField: a field in VINFO was incorrect. This parameter is valid only when VSTATUS returns the value: V_ERR_VINFO. A -1 indicates VINFO was more generally in error.

Valid state(s) to issue:
VST_INIT

State after successful execution (V_OK):
VST_OPEN

Return values:
V_OK : for successful return (=0)
V_ERR_VINFO : invalid VINFO
V_ERR_RSCFAIL : system resource failure

3.3.2. VCapture

This function starts/stops capturing a video stream from a local video hardware source, such as a video camera or VCR. The captured video can be displayed in a window by using the VMonitor function. A capture source is not explicitly defined but implied to be the local video capture hardware and driver.

VSTATUS VCapture(HVSTRM hVStrm, BOOL bFlag)

HUAWEI EX. 1016 - 626/714

input
hVStrm: handle to a video stream.
bFlag: On/Off flag. Off=**FALSE** and On=**TRUE**.

Valid state(s) to issue:
VST_OPEN (VCapture - on)
VST_CAPTURE (VCapture - off)

State after execution:
VST_OPEN -> VST_CAPTURE
VST_CAPTURE -> VST_OPEN

Return values:
V_OK : for successful return (=0)
V_ERR_STATE : invalid stream state to issue this function
V_ERR_HVSTRM : invalid stream handle
V_ERR_RSCFAIL : system resource failure

VMonitor

This function starts/stops monitoring (displaying video in a window) a video stream captured from local video camera or VCR. The capture source is specified in the VCapture function; see above.

VSTATUS VMonitor(HVSTRM hVStrm, HWND hWnd, BOOL bFlag)

input
hVStrm: handle to a video stream.
hWnd: handle to a window, pre-opened by the app, in which monitoring is to take place.
If bFlag=**FALSE**, then the previously specified monitor window is disassociated from the stream (and the specified window is ignored).
bFlag: On/Off flag. Off=**FALSE** and On=**TRUE**.

Valid state(s) to issue:
VST_CAPTURE/VST_LINKOUT

State after execution:
unchanged

Return values:
V_OK : for successful return
V_ERR_STATE : invalid stream state to issue this function
V_ERR_FLAG : duplicated operation
V_ERR_HVSTRM : invalid stream handle
V_ERR_HWND : invalid window handle
V_ERR_RSCFAIL : system resource failure

HUAWEI EX. 1016 - 627/714

3.3.4. VLinkOut

Link a network video sink to a video stream for remote transmission. Usage: Local capture to network output.

```
VSTATUS VLinkOut(HVSTRM hVStrm, HCHAN hChan, BOOL bFlag)

input
hAStrm     : handle to the video stream.
hChan      : channel handle of the video output sink.
             If bFlag=FALSE, then the previously specified
             channel is disassociated from the stream (and the
             specified channel is ignored).
bFlag      : link or unlink flag. Link=TRUE; Unlink=FALSE.

Valid state(s) to issue:
     VST_CAPTURE     (VLinkOut - link)
     VST_LINKOUT     (VLinkOut - unlink)

State after execution:
     VST_CAPTURE     -> VST_LINKOUT
     VST_LINKOUT     -> VST_CAPTURE

Return values:
     V_OK            : for successful return
     V_ERR_STATE     : invalid stream state
     V_ERR_CHANID    : invalid network channel for video output
                       source
     V_ERR_RSCFAIL   : system resource failure
```

3.3.5. VLinkIn

Link a network video source to a video stream for playback. Usage: Network input to local playback.

```
VSTATUS VLinkIn(HVSTRM hVStrm, HCHAN hChan, BOOL bFlag)

input
hVStrm:    handle to the video stream.
hChan:     channel handle of the video input source.
           If bFlag=FALSE, then the previously specified channel
           is disassociated from the stream (and the specified
           channel is ignored).
bFlag:     link or unlink flag. Link=TRUE; Unlink=FALSE.
           If FALSE, then ChanId is disassociated from the stream.

 Valid state(s) to issue:
     VST_OPEN        VLinkIn - link)
     VST_LINKIN      VLinkIn - unlink)
```

HUAWEI EX. 1016 - 628/714

State after execution:
VST_OPEN -> VST_LINKIN
VST_LINKIN -> VST_OPEN

Return values:
V_OK : for successful return
V_ERR_STATE : invalid stream state
V_ERR_CHANID : invalid network channel for video input source
V_ERR_RSCFAIL : system resource failure

3.3.6. VPlay

This function starts/stops playing a linked-in video stream by consuming a video stream from a video network source and displaying it in a window. Specifics of the video network source are assigned the stream using the VLinkIn function; see above.

VSTATUS VPlay(HVSTRM hVStrm, HWND hWnd, BOOL bFlag)

input
hVStrm: handle to the video stream.
hWnd: handle to a window pre-opened by the app.
bFlag: start play or stop play flag. Play=**TRUE**; Stop Play=**FALSE**.
If stop play, then hWnd is disassociated from the stream (and the specified window is ignored).

Valid state(s) to issue:
VST_LINKIN (VPlay - on)
VST_PLAY (VPlay - off)

State after execution:
VST_PLAY -> VST_LINKIN
VST_LINKIN -> VST_PLAY

Return values:
V_OK : for successful return
V_ERR_STATE : invalid stream state to issue this function
V_ERR_HVSTRM : invalid stream handle
V_ERR_RSCFAIL : system resource failure
V_ERR_FLAG : duplicated operation

VPause

This function pauses or unpauses a video stream captured or played locally.

HUAWEI EX. 1016 - 629/714

NOTE: This function is currently unimplemented. Its function has been found to be available via combinations of the other stream functions. To pause a local stream, use VMonitor (off); to pause the remote stream, use VPlay (off). To mute the local video stream, at the remote site, use VLinkOut (off).

VSTATUS VPause(HVSTRM hVStrm, BOOL bFlag)

input

hVStrm: handle to the video stream.
bFlag: PauseOn/PauseOff flag. PauseOn=**TRUE**; PauseOff=**FALSE**.

Valid state(s) to issue:
VST_CAPTURE
VST_PLAY
VST_LINKOUT

State after execution:
Unchanged

Return values:

V_OK	: for successful return
V_ERR_STATE	: invalid stream state to issue this function
V_ERR_HVSTRM	: invalid stream handle
V_ERR_FLAG	: duplicated operation
V_ERR_RSCFAIL	: system resource failure

3.3.8. VGrabframe

This function grabs the most current still image (key frame) from a specified video stream. The frame is returned in a DIB format. VGrabframe allocates the DIB bits buffer, and the user must free it. The user provides the DIB BITMAPINFO structure, of maximum extent, which is of fixed length.

VSTATUS VGrabframe(HVSTRM hVStrm, LPSTR FAR *lplpvbits, LPBITMAPINFO lpbmi)

input

hVStrm:	handle to the video stream.
lpbmi:	pointer to a DIB BITMAPINFO structure. The BITMAPINFO must have an extent equal to a bmiColors array with 256 entries, giving a BITMAPINFO structure of maximum length.

HUAWEI EX. 1016 - 630/714

output
lplpvbits: pointer to a pointer to a DIB image buffer that is allocated by the video manager and freed by the application. Windows GlobalAlloc (with memory attributes GMEM_MOVEABLE | GMEM_SHARE) and GlobalLock are used to allocate the DIB bits memory.

Valid state(s) to issue:
VST_MONITOR
VST_PLAY

State after execution:
Unchanged

Return values:

V_OK	: for successful return
V_ERR_STATE	: invalid stream state to issue this function
V_ERR_HVSTRM	: invalid stream handle
V_ERR_RSCFAIL	: system resource failure

VCntl

This function controls a video stream by adjusting its parameters (e.g., Tint/Contrast, Frame/Data Rate).

VSTATUS VCntl(HVSTRM hVStrm, LPVINFO lpVInfo, WORD wField)

input
hVStrm : handle to the video stream

output
lpVInfo : pointer to the video information structure, VINFO, that was preallocated by the apps, but filld by the vide manager.
wField : field value to be changed.

Valid state(s) to issue:
all states except VST_INIT

State after execution:
unchanged

Return values:

V_OK	: for successful return
V_ERR_HVSTRM	: invalid stream handle
V_ERR_STATE	: invalid stream state to issue this function
V_ERR_FIELD	: invalid VINFO field
V_ERR_LPVINFO	: invalid VINFO pointer
V_ERR_RSCFAIL	: system resource failure

HUAWEI EX. 1016 - 631/714

3.3.10. VGetInfo

This function returns the status of a video stream.

VSTATUS VGetInfo(HVSTRM hVStrm, LPVINFO lpVInfo, LPWORD lpwState)

input
hVStrm: handle to the video stream.

output
lpVInfo: handle to the video information structure, VINFO, that was preallocated by the apps, but filled by the video manager
lpwState: pointer to a WORD where the state of the specified stream can be returned.

Valid state(s) to issue:
all states except VST_INIT

State after execution:
unchanged

Return values:

V_OK	: for successful return
V_ERR_STATE	: invalid stream state to issue this function
V_ERR_HVSTRM	: invalid stream handle
V_ERR_LPVINFO	: invalid VINFO pointer

VClose

This function closes a video stream and releases all system resources allocated for the stream.

VSTATUS VClose(HVSTRM hVStrm)

input
hVStrm: handle to the video stream.

Valid state(s) to issue:
All STATES except in VST_INIT

State after execution:
ST_INIT

Return values:

V_OK	: for successful return
V_ERR_HVSTRM	: invalid stream handle

HUAWEI EX. 1016 - 632/714

3.4. Video Subsystem Functions

The subsystem functions are used to manage and return information about the video subsystem as a whole. This includes subsystem initialization, shutdown, and cost, or utilization, information.

3.4.1. VInit

This function initializes the video subsystem. Capture and playback applications can be started. Windows INI file entries are used to configure the subsystem.

Subsystem initialization also includes the measurement of the CPU and display subsystem (graphics adapter) in order to provide video cost information; see *VCost*, below.

VSTATUS VInit(dwInitFlags)

input

dwInitFlags:	initialization flags. Flag bits are OR'd to determine interface options. Current flag bits are:	
	VM_CAPT_INIT:	start capture application
	VM_PLAY_INIT:	start playback application

Return values:

V_OK:	for successful return
V_ERR:	general error

3.4.2. VShutdown

This function uninitializes, or stops, the video subsystem. Capture and playback applications are stopped.

VSTATUS VShutdown()

Return values:

V_OK:	for successful return
V_ERR:	general error

VCost

This function gives the percentage utilization of the CPU required to support a given video stream.

HUAWEI EX. 1016 - 633/714

The function can be called repeatedly, and at any time after the video manager is initialized (*VInit* called). Repeated calls can be used to determine an "optimal" configuration of local and remote video windows.

VSTATUS VCost(wRes, wDispFreq, wFrameRate, wFormat, dwFlags, lpwCost)

input

wRes:	resolution of a video display window.
wDispFreq:	display frequency of a video display window. Display frequency is a function of the FrameRate. 1 = All frames; 2 = Every other frame; 3 = Every third frame; etc. 0 = no frames displayed.
wFrameRate:	captured video frame rate (fps). For IRV, this is typically 10-15 fps.
wFormat:	defines the video compression algorithm. Currently supported values are: CAPT_FORMAT_IRV CAPT_FORMAT_YUV
dwFlags:	Flags which further specify specific video attributes. Currently supported values are: LOCAL_STREAM (=0x1) REMOTE_STREAM (=0x2) These values specify whether the video in question originates locally or remotely.

output

lpwCost:	pointer to a WORD where a system utilization value can be returned. The value returned is a system utilization percentage. It is 0 or greater. Values greater than 100 can be returned.

Return values:

V_OK:	for successful return
V_ERR:	general error

Audio API Data Structures, Functions, and Messages

Audio API 512 utilizes the following data types:

HASTRM	Handle to an audio stream
LPHASTRM	Pointer to the handle of an audio stream
AINFO	Audio information structure

HUAWEI EX. 1016 - 634/714

LPAINFO	Pointer to an audio information structure
ACCB	Audio Compression Control Block
LPACCB	Pointer to the Audio Compression Control Block
ADEVCAPS	Audio Device Capabilities structure
LPACAPS	Pointer to the Audio Device Capabilities structure
STATUS	Status code returned by Audio Subsystem

Audio API 512 utilizes the following structures:

ADevCaps

OUT WORD	wVersion	Version of the audio manager
OUT WORD	wMid	Manufacturer ID
OUT WORD	wPid	Product ID
OUT char	szPname[MAXPNAMELEN]	NULL terminated string containing the name of the audio manager
OUT DWORD	dwFormats	Sample wave formats supported by subsystem when no compression is used
OUT WORD	wChannels	Number of audio channels supported by driver (mono (1) or stereo (2))
IN WORD	nAcceptCoders	Size of ACCB array referenced by lpACCB
OUT WORD	nReturnCoders	Number of ACCB structures returned in ACCB array referenced by lpACCB
IN LPACCB	lpACCB	Pointer to an array of ACCB structures. There should be an ACCB structure per supported compression algorithm.

ACCB (Audio Compression Control Block)

char	szProdName[MAXCOMPRESS]	Name of Compression Algorithm

HUAWEI EX. 1016 - 635/714

WAVEFORMAT	wf	Wave format as defined **Microsoft Multimedia Programmer's Reference**
WORD	wBitsPerSample	Number of bits per sample per channel.
WORD	cbExtraSize	Extra number in bytes of the WAVEFORMAT structure.
WORD	wAvgCompRation	Specifies the average compression ratio provided by the compression device
WORD	samplesPerFrame	The smallest number of audio samples required by the compression device to generate a frame.

AINFO (IN/OUT Information of an Audio Stream)

WORD	wType	Local or remote audio stream
WORD	wCompress	Index into compression table
DWORD	dwResolution	Resolution in milliseconds with which Audio Manager can adjust latency on an audio stream
DWORD	dwLatency	Milliseconds of latency from the time the audio packet is recorded to the time it is put on the network.

HUAWEI EX. 1016 - 636/714

```
Union {
    // local audio stream
struct {
   WORD                    wIn          Audio input hardware
                                        source
   WORD                    wGain        Gain of the local
                                        microphone
   WORD                    wAux         Volume of the monitor
                                        audio stream.
} local
    // remote audio stream
struct {
   WORD                    wOut         Audio output hardware
                                        destination
   WORD                    wVol         Volume of the local
                                        speaker
} remote
}
```

Audio API 512 utilizes the following constants:

```
State values:
   AST_INIT            Init state
   AST_OPEN            Open state
   AST_CAPTURE         Capture state
   AST_PLAY            Play state
   AST_LINKIN          Link In state
   AST_LINKOUT         Link Out state
   AST_ERROR           Error state

Status values:
   A_OK                successful return
   A_ERR_STATE         invalid stream state
   A_ERR_HASTRM        invalid stream handle
   A_ERR_LPAINFO       invalid AINFO pointer
   A_ERR_FIELD         invalid AINFO field
```

HUAWEI EX. 1016 - 637/714

A_ERR_LPHCHAN	invalid network channel
A_ERR_RSCFAIL	system resource failure
A_ERR_STREAM	too many outstanding audio streams
A_ERR_PENDING	call pending on the audio subsystem
A_ERR_NODEV	invalid Audio Manager device number
A_ERR_NOCALLBACK	APacketNumber issued without a registered callback function
A_STREAM_CLOSED	Hang-up received on an audio stream
A_ERR_NOSUPPORT	Feature not supported in current release of Audio Manager

The functions utilized by audio API 512 are defined as follows:

AGetNumDevs or AInit (synchronous)

This function retrieves the number of different Audio Managers installed on the system. AGetNumDevs and AInit perform the same function. AInit exists for symmetry with the Video Manager

UINT AGetNumDevs (void) or AInit (void)

Valid state(s) to issue:
ANY

State after execution:
NO CHANGE

Return values:
Number of Audio Manager available on the system.

AGetDevCaps (synchronous)

This function fills the ADevCaps structure with information regarding the specified Audio Manager.

AStatus AGetDevCaps (UINT wDeviceID, LPACAPS lpCaps)

input

wDeviceID: Identifies the Audio Manager to query. Use a integer from 0 to one less than the number of installed audio managers.

lpCaps: Specifies a far pointer to an ADevCaps structure. An array of ACCB structures must be allocated to receive a list of audio compression algorithms supported by the Audio Manager. The ADevCaps fields

HUAWEI EX. 1016 - 638/714

lpACCB and wAcceptCoders should be set to reference this array and the array size, respectively.

Valid state(s) to issue:
ANY

State after execution:
NO CHANGE

Return values:
A_OK : for successful return
A_ERR_NODEV : invalid wDeviceID

AOpen (asynchronous or synchronous)

This function opens an audio stream with specified attributes.

```
AStatus AOpen (LPAINFO lpAInfo, UINT wDeviceID, DWORD dwCallback,
       DWORD dwCallbackInstance, DWORD dwFlags,
       LPWORD lpwField, LPHASTRM lphAStrm)
```

input

lpAInfo: The audio information structure, AInfo, with specified attributes. NOTE: normally wCompress is set to 0; this will select the default coder to be used on the audio stream.

wDeviceID: Identifies the Audio Manager to use. The value can range from zero to one less than the value returned by AGetNumDevs.

dwCallback: Based on value of dwFlags, specifies the address of a callback function or a handle to a window.

dwCallbackInstance: Specifies user instance data passed to the callback. This parameter is not used when dwCallback is a windows handle.

dwFlags: Defines whether the application interface to Audio Manager will be asynchronous or synchronous. If dwFlags is **CY_CALLBACK_NONE**, the interface is synchronous and dwCallback is a Window handle used by the audio subsystem to block while the underlying asynchronous audio manager completes its service. IF dwFlags is **CY_CALLBACK_FUNCTION** or **CY_CALLBACK_WINDOW**, the interface is

HUAWEI EX. 1016 - 639/714

asynchronous and the parameter dwCallback is a Window handle or a function[k].

output

lpwField: One or more fields in AInfo were incorrect. This parameter is set only when AStatus returns the value: **A_ERR_FIELD.** Its value is a bit-mask which identifies which fields are invalid.

lphAStrm: If dwFlags is CY_CALLBACK_NONE specifying that a synchronous interface with the audio subsystem is being used, the subsystem will return the handle to the new audio stream in this variable when AStatus is A_OK.

callback

void CALLBACK **AudioManagerFunc**(hAStrm, Message, dwCallbackInstance, dwParam1, dwParam2)

AudioManagerFunc is a place holder for the function name provided by the caller. The function must be included in an EXPORT statement in a DLL. The callback must also be locked in memory as it is called at interrupt time. Since the callback is executed in an interrupt context, limited functionality is available to it[k].

Callback Parameters:

HASTRM	hAStrm	: Audio stream to which callback applies.
UINT	Message	: Message returned by the audio subsystem.
DWORD	dwCallbackInstance	: caller specific instance data.
DWORD	dwParam1	: Message specific parameter.
DWORD	dwParam2	: Message specific parameter.

Valid state(s) to issue:
AST_INIT

HUAWEI EX. 1016 - 640/714

State after execution:
AST_OPEN

Return Messages/Callbacks
AM_OPEN : Posted at callback time. The value of Param1 is one of the values defined in *Param1 Values* below. The value of Param2 is a **HASTRM** if Param1 is **A_OK.**

Return/Param1 Values:

A_OK	: for successful return
A_ERR_STREAM	: too many outstanding audio streams
A_ERR_LPAINFO	: invalid AINFO pointer
A_ERR_FIELD	: invalid AINFO Field(s)
A_ERR_RSCFAIL	: system resource failure
A_ERR_PENDING	: open call pending on the audio subsystem
A_ERR_NOSUPPORT	:invalid dwFlags field
A_ERR_NODEV	: invalid wDeviceID

ACapture (asynchronous or synchronous)

This function starts/stops capturing an audio stream from a local audio hardware source, such as a microphone.

AStatus ACapture(HASTRM hAStrm, BOOL bFlag)

input
hAStrm: handle of an audio stream
bFlag: on/off flag.

Valid state(s) to issue:
AST_OPEN (ACapture - on)
AST_CAPTURE (ACapture - off)

State after execution:
AST_OPEN -> AST_CAPTURE
AST_CAPTURE -> AST_OPEN

Return Messages/Callbacks
AM_CAPTURE : Posted at callback time. The value of Param1 is one of the values defined in *Param1 Values* below. The value of Param2 is the state of the stream: **TRUE** means capturing, **FALSE** means capture disabled.

Return/Param1 Values:

A_OK	: for successful return
A_ERR_STATE	: invalid stream state
A_ERR_HASTRM	: invalid stream handle
A_ERR_RSCFAIL	: system resource failure

HUAWEI EX. 1016 - 641/714

A_ERR_FLAG : duplicated operation
A_ERR_PENDING : call pending on the audio subsystem for this stream.

AMute (asynchronous or synchronous)

This function starts/stops muting of an audio stream captured from local microphone or being played back on the speakers.

AStatus AMute(HASTRM hAStrm, BOOL bFlag)

input
hAStrm: pointer to the handle of an audio stream
bFlag: on/off flag.

Valid state(s) to issue:
AST_CAPTURE/AST_LINKOUT
AST_LINKIN/AST_PLAY

State after execution:
Unchanged

Return Messages/Callbacks
AM_MUTE : Posted at callback time. The value of Param1 is one of the values defined in *Param1 Values* below. The value of Param2 is the state of the stream: **TRUE** means muting, **FALSE** means muting is disabled.

Param1 Values:
A_OK : for successful return
A_ERR_STATE : invalid stream state
A_ERR_FLAG : duplicated operation
A_ERR_HASTRM : invalid stream handle
A_ERR_RSCFAIL : system resource failure

Return values:
A_OK : for successful return
A_ERR_PENDING : call pending on the audio subsystem for this stream.

APlay (asynchronous or synchronous)

This function starts/stops playing an audio stream received from a network source. See details in "ALinkIn".

AStatus APlay(HASTRM hAStrm, BOOL bFlag);

input
hAStrm: handle to the audio stream
bFlag: on/off flag.

HUAWEI EX. 1016 - 642/714

```
Valid state(s) to issue:
   AST_LINKIN      (APlay - on)
   AST_PLAY        (APlay - off)

State after execution:
   AST_LINKIN      -> AST_PLAY
   AST_PLAY        -> AST_LINKIN

Return Messages/Callbacks
   AM_PLAY    : Posted at callback time. The value of Param1 is
                one of the values defined in Param1 Values below.
                The value of Param2 is the state of the stream: TRUE
                means playing, FALSE means play disabled.

Return/Param1 Values:
   A_OK             : for successful return
   A_ERR_STATE      : invalid stream state
   A_ERR_HASTRM     : invalid stream handle
   A_ERR_FLAG       : duplicated operation
   A_ERR_RSCFAIL    : system resource failure
   A_ERR_PENDING    : call pending on the audio subsystem for this
                      stream.
```

ALinkIn (asynchronous or synchronous)

This function links/unlinks an input network channel to/from the specified audio stream. Once linked, the audio stream can be played on the local speakers/headphones via the **APlay** function defined earlier.

```
AStatus ALinkIn(HASTRM hAStrm, LPHCHAN lphChan*, BOOL bFlag);
```

input

```
hAStrm:      handle to the audio stream
lphChan:     pointer to a channel handle identifying the audio
             network input source
 bFlag:      link or unlink flag.

Valid state(s) to issue:
   AST_OPEN        (ALinkIn - link)
   AST_LINKIN      (ALinkIn - unlink)

State after execution:
   AST_OPEN        -> AST_LINKIN
   AST_LINKIN      -> AST_OPEN
```

HUAWEI EX. 1016 - 643/714

Return Messages/Callbacks
AM_LINKIN : Posted at callback time. The value of Param1 is one of the values defined in *Param1 Values* below. The value of Param2 is the state of the stream: **TRUE** means linked, **FALSE** means unlinked.

Return/Param1 Values:

A_OK	: for successful return
A_ERR_STATE	: invalid stream state
A_ERR_HASTRM	: invalid stream handle
A_ERR_FLAG	: duplicated operation
A_ERR_LPHCHAN	: invalid network channel handle for audio input source
A_ERR_PENDING	: call pending on the audio subsystem
A_ERR_RSCFAIL	: system resource failure

ALinkOut (asynchronous and synchronous)

This function links/unlinks an output network channel to/from the specified audio stream that will be captured or is being captured from the local microphone.

```
AStatus ALinkOut(HASTRM hAStrm, LPHCHAN lphChan, BOOL bFlag);
```

input

hAStrm:	handle to the audio stream
lphChan:	pointer to a channel handle identifying the network output destination
bFlag:	link or unlink flag.

Valid state(s) to issue:

AST_CAPTURE	(ALinkOut - link)
AST_LINKOUT	(ALinkOut - unlink)

State after execution:

AST_CAPTURE	-> AST_LINKOUT
AST_LINKOUT	-> AST_CAPTURE

Return Messages/Callbacks
AM_LINKOUT : Posted at callback time. The value of Param1 is one of the values defined in *Param1 Values* below. The value of Param2 is the state of the stream: **TRUE** means linked, **FALSE** means unlinked.

Return/Param1 Values:

A_OK	: for successful return
A_ERR_STATE	: invalid stream state
A_ERR_HASTRM	: invalid stream handle

HUAWEI EX. 1016 - 644/714

```
A_ERR_FLAG      : duplicated operation
A_ERR_LPHCHAN   : invalid network channel for audio output
                  source
A_ERR_RSCFAIL   : system resource failure
A_ERR_PENDING   : call pending on this audio stream.
```

ACntl (asynchronous or synchronous)

This function can be used to control the amount of latency on an audio stream. In addition, the gains of an audio stream being captured or the volume of an audio stream being played back can also be set. Finally, the locally captured audio input can be monitored by setting the *wAux* AINFO field.

```
AStatus ACntl(HASTRM hAStrm, LPAINFO lpAInfo, WORD wField)

input
hAStrm          : handle to the audio stream
lpAInfo         : pointer to the audio information structure,
                  AInfo, with specified attributes.
wField          : the selected field of AInfo to change.

Valid state(s) to issue:
  all states except AST_INIT

State after execution:
  unchanged

Return Messages/Callbacks
  AM_CNTL   : Posted at callback time. If there is an error, the
              value of Param1 is one of the values listed below in
              Param1 Values and Param2 is ZERO (i.e. if Param2 ==
              0) ERROR;). If the command is successful, the value
              of Param1 is wField and the value of Param2 is the
              pointer lpAInfo passed to the call ACntl.

Return/Param1 Values:
  A_OK          : for successful return
  A_ERR_HASTRM  : invalid stream handle
  A_ERR_STATE   : invalid stream state
  A_ERR_LPAINFO : invalid AINFO pointer
  A_ERR_FIELD   : invalid AINFO Field
  A_ERR_RSCFAIL : system resource failure
  A_ERR_PENDING : call pending on this audio stream.
```

AGetInfo (asynchronous and synchronous)

This function returns the AINFO and state of an audio stream.

```
AStatus AGetInfo(HASTRM hAStrm, LPAINFO lpAInfo, LPWORD lpwState)
```

HUAWEI EX. 1016 - 645/714

input
hAStrm: handle to the audio stream

output
lpAInfo: pointer to the handle of AINFO that was preallocated by the apps, but filled by the audio manager
lpwState: state of the specified stream

Valid state(s) to issue:
all states except AST_INIT

State after execution:
unchanged

Return Messages/Callbacks
AM_GETINFO : Posted at callback time. If there is an error, the value of Param1 is one of the values listed below in *Param1 Values* and Param2 is ZERO (i.e. if Param2 == 0) ERROR;). If the command is successful, both Param1 and Param2 are ZERO.

Return/Param1 Values:
A_OK : for successful return
A_ERR_STATE : invalid stream state
A_ERR_HASTRM : invalid stream handle
A_ERR_LPAINFO : invalid AINFO pointer
A_ERR_RSCFAIL : system resource failure
A_ERR_PENDING : call pending on this audio stream.

AClose (asynchronous and synchronous)

This function closes an audio stream and releases all system resources allocated for this stream.

AStatus AClose(HASTRM hAStrm)

input
hAStrm: handle to the audio stream

Valid state(s) to issue:
All STATES except in AST_INIT

State after execution:
AST_INIT

Return Messages/Callbacks
AM_CLOSE : Posted at callback time. Param1 is one of the *Param1 Values* listed below. Param2 is the stream handle passed to **AClose.**

HUAWEI EX. 1016 - 646/714

Return/Param1 Values:
A_OK : for successful return
A_ERR_HASTRM : invalid stream handle
A_ERR_PENDING : call pending on this audio stream.

ARegisterMonitor (asynchronous)

This function registers an *audio stream monitor*. The Audio Manager maintains a packet count on each open stream. This count represents a running clock where the elapse time since the initiation of the audio stream is simply the packet count times the latency represented by each packet. Users of the audio subsystem gain access to this clock source via an audio stream monitor.

AStatus ARegisterMonitor(HASTRM hAStrm, DWORD dwCallback, DWORD dwCallbackInstance, DWORD dwFlags, DWORD dwRequestFrequency, LPDWORD lpdwSetFrequency)

input

hAStrm: handle to the audio stream

dwCallback: Specifies the address of a callback function or a handle to a window.

dwCallbackInstance: Specifies user instance data passed to the callback. This parameter is not used with windows callbacks.

dwFlags: Specifies whether the parameter dwCallback is a Window handle or a function. If it is a Window handle, the value is set to **CY_CALLBACK_WINDOW**. If it is a function, dwFlags is set to **CY_CALLBACK_FUNCTION**.

dwRequestFrequency: Specifies the period (in milliseconds) the Audio Manager should playback or record audio before reporting the current elapsed time to the caller. A value of zero means don't callback (use **APacketNumber** to force a callback).

output

lpdwSetFrequency: The Audio Manager returns via this far pointer the actual period (in milliseconds) between AM_PACKETNUMBER callbacks. This number will be set as

HUAWEI EX. 1016 - 647/714

Initiation here refers to the moment a local audio stream enters the AST_CAPTURE state.

HUAWEI EX. 1016 - 648/714

close as possible to dwRequestFrequency based on the resolution of latency associated with the audio stream (see AINFO field *dwResolution*).

Valid state(s) to issue:
AST_PLAY, AST_LINKIN, AST_CAPTURE, AST_LINKOUT

callback
void CALLBACK **AudioManagerFunc**(hAStrm, Message, dwCallbackInstance, dwParam1, dwParam2)

AudioManagerFunc is a place holder for the function name provided by the caller. The function must be included in an EXPORT statement in a DLL. The callback must also be locked in memory as it is called at interrupt time. Since this callback is executed in an interrupt context, limited functionality is available to it*.

Callback Parameters:

HASTRM	hAStrm	: Audio stream to which callback applies.
UINT	Message	: Message returned by the audio subsystem.
DWORD	dwCallbackInstance	: caller specific instance data.
DWORD	dwParam1	: Stream status.
DWORD	dwParam2	: Current packet number multiplied by the packet latency (in milliseconds)

State after execution:
NO CHANGE

Return Messages/Callbacks
AM_PACKETNUMBER : Posted at callback time.

Param1 Values:
A_OK : for successful return
A_STREAM_CLOSED : for successful return

Return values:
A_OK : for successful return
A_ERR_STATE : invalid stream state
A_ERR_HASTRM : invalid stream handle
A_ERR_PENDING : call pending on this audio stream.

HUAWEI EX. 1016 - 649/714

APacketNumber (asynchronous)

This function returns the elapsed time (in milliseconds) since the packet on an audio stream was captured.

AStatus APacketNumber(HASTRM hAStrm)

input
hAStrm: - handle to the audio stream

Valid state(s) to issue:
AST_LINKOUT, AST_PLAY, AST_CAPTURE, AST_LINKOUT

State after execution:
NO CHANGE

Return Messages/Callbacks
AM_PACKETNUMBER : Posted at callback time. The value of Param1 is one of the values defined in *Param1 Values* below.. Param2 is the current packet number multiplied by the packet latency (in milliseconds).

Param1 Values:
A_OK : for successful return
A_STREAM_CLOSED : for successful return

Return values:
A_OK : for successful return
A_ERR_STATE : invalid stream state
A_ERR_HASTRM : invalid stream handle
A_ERR_PENDING : call pending on the audio subsystem
A_ERR_NOCALLBACK : callback must be registered with ARegisterMonitor

AShutdown (synchronous)

This function forcefully closes all open audio streams and unloads any open Audio Manager drivers.

BOOL AShutdownAPacketNumber (void)

Valid state(s) to issue:
any state accept AST_INIT

State after execution:
AST_INIT

HUAWEI EX. 1016 - 650/714

```
Return Messages/Callbacks
       none

Return values:
   TRUE       : for successful return
```

Comm API Data Structures, Functions, and Messages

Comm API 510 utilizes the following data types:

```
typedef WORD      HSESS, FAR *LPHSESS;      // session handle
typedef WORD      HCONN, FAR *LPHCONN;      // connection handle
typedef WORD      HCHAN, FAR *LPHCHAN;      // channel handle
//
// TII RETURN CODE VALUES.
//
typedef enum _TSTATUS
{
   SUCCESSFUL                = 0,
   PRIORITY_IN_USE           = 1,
   CHAN_TRAN_FULL            = 2,
   CHAN_INVALID              = 3,
   CONN_BAD_ID               = 4,
   DRIVER_NOT_INSTALLED      = 5,
   HANDLE_INVALID            = 6,
   INVALID_CONTROL_OP        = 7,
   INVALID_INFOTYPE          = 8,
   NO_CHAN_MGR               = 9,
   NO_DATA_AVAIL             = 10,
   NO_OPEN_CHAN              = 11,
   NO_SESSION                = 12,
   NO_CONNECTION             = 13,
   NO_CONNECT_REQUEST        = 14,
   RELIABLE_OPS_PENDING      = 15,
   REQUEST_WITHDRAWN         = 16,
   TOO_MANY_SESSIONS         = 17,
   TRAN_INVALID              = 18,
   TRANSPORT_ERR             = 19,
   INVALID_PARM              = 20,
   ALREADY_CONNECTED         = 21,
   GLOBAL_ALLOC_FAIL         = 22,
   INVALID_STATE             = 23,
   NO_PKT_BUFS               = 24,
   GALLOC_ERR                = 25,
   TOO_MANY_CONN             = 26,
   TOO_MANY_CHAN_MGR         = 27,
   TOO_MANY_CHANNELS         = 28,
   WATCHDOG_TIMEOUT          = 29
   } TSTATUS;
```

HUAWEI EX. 1016 - 651/714

```
//
// CONNECTION ATTRIBUTES STRUCTURE
//
typedef CONNCHARACTS CONN_CHR, FAR *LPCONN_CHR;
//
// CHANNEL INFO STRUCTURE
//
typedef struct tagCHAN_INFO
{
   WORD Id;
   WORD State;
   WORD Timeout;
   BYTE Priority;
   BYTE Reliability;
   BYTE Info[16];       // User Info
} CHAN_INFO, FAR *LPCHAN_INFO;
//
// CONNECTION INFO STRUCTURE
//
typedef struct tagCONN_INFO
{
   WORD wState;
   WORD wNumInChans;
   WORD wNumOutChans;
} CONN_INFO, FAR *LPCONN_INFO;
//
// lParam structure for Session handler
// (in cases where multiple parameters are returned via lParam)
//
typedef struct tagSESS_CB {
   union     tagSESS_EV {
        struct    tagConReq {
             HSESS          hSess;
             LPTADDR        lpCallerAddr;
             LPCONN_CHR     lpAttributes;
        } ConReq;
        struct    tagConAcc {
             DWORD          dwTransId;
             LPCONN_CHR     lpAttributes;
        } ConAcc;
   } SESS_EV;
} SESS_CB, FAR *LPSESS_CB;
//
// lParam structure for Channel Manager
// (in cases where multiple parameters are returned via lParam)
//
typedef struct tagCHANMGR_CB {
   union     tagCHANMGR_EV  {
        struct    tagChanReq {
             DWORD          dwTransId;
             HCONN          hConn;
             LPCHAN_INFO    lpChanInfo;
```


HUAWEI EX. 1016 - 652/714

```
        } ChanReq;
    } CHANMGR_EV;
} CHANMGR_CB, FAR *LPCHANMGR_CB;
//
//Structure for Channel Statistics
//
typedef      struct CHAN_STATS_tag {
   DWORD     Tx;
   DWORD     Rx;
   DWORD     Err;
   DWORD     OkNotify;
   DWORD     ErrNotify;
   DWORD     ErrNotifyBuf;
   DWORD     NopNotify;
   DWORD     Bytes;
   DWORD     OkNotifyBytes;
   DWORD     ErrNotifyBytes;
} CHAN_STATS, FAR *LP_CHAN_STATS;
//
//Structure for TII Statistics
//
#define      MAX_CHAN_STATS 17
typedef      struct TII_STATS_tag {
   DWORD          RoundTripLatencyMs;
   CHAN_STATS     ChanStats [MAX_CHAN_STATS];
} TII_STATS, FAR *LP_TII_STATS;
//
// Address Structure
//
typedef struct tag_TADDR {
   WORD       AddressType;
   WORD       AddressLength;
   BYTE       Address[80];
} TADDR, FAR *LPTADDR;
//
// Connection Characteristics
//
typedef struct tag_CONNCHARACTS {
   WORD       Quality;
   WORD       BitRate;
} CONNCHARACTS, FAR *LPCONNCHARACTS;
```

Comm API 510 utilizes the following constants:

```
#define BITRATE_112KB          0
#define BITRATE_120KB          1
#define BITRATE_128KB          2
#define CHAN_ACCEPTED          FIRST_TII_MSG +1
#define CHAN_BADID             FIRST_TII_MSG +2
```

HUAWEI EX. 1016 - 653/714

```
#define CHAN_CLOSED              FIRST_TII_MSG +3
#define CHAN_DATA_AVAIL          FIRST_TII_MSG +4
#define CHAN_DATA_SENT           FIRST_TII_MSG +5
#define CHAN_CLOSE_RESP          FIRST_TII_MSG +6
#define CHAN_RCV_COMPLETE        FIRST_TII_MSG +7
#define CHAN_REJECTED            FIRST_TII_MSG +8
#define CHAN_REJECT_NCM          FIRST_TII_MSG +9
#define CHAN_REQUESTED           FIRST_TII_MSG +10
#define CHAN_TIMEOUT             FIRST_TII_MSG +11
#define CONN_ACCEPTED            FIRST_TII_MSG +12
#define CONN_CLOSE_RESP          FIRST_TII_MSG +13
#define CONN_CLOSED              FIRST_TII_MSG +14
#define CONN_REJECTED            FIRST_TII_MSG +15
#define CONN_REQUESTED           FIRST_TII_MSG +16
#define CONN_TIMEOUT             FIRST_TII_MSG +17
#define CHAN_LOST_DATA           FIRST_TII_MSG +18
#define COMM_INTERNAL_ERROR      FIRST_TII_MSG +19
#define CONN_ERROR               FIRST_TII_MSG +20
#define SESS_CLOSED              FIRST_TII_MSG +21
#define CONN_PROGRESS            FIRST_TII_MSG +22
#define TRANS_ERR                FIRST_TII_MSG +99
//
// CONN_PROGRESS substates.  These will be returned in wParam.
//
#define T_PRG_BUSY                  1
#define T_PRG_RINGING               2
#define T_PRG_OTHER                 3   // place-holder for
othercodes
//
// CONN_REJECTED substates.  These will be returned in wParam.
//
#define T_REJ_BUSY                  1
#define T_REJ_REJECTED              2
#define T_REJ_NET_CONGESTED         3
#define T_REJ_NO_RESPONSE           4
#define T_REJ_NET_FAIL              5
#define T_REJ_INTERNAL              6
//
// Flag indicating multiple connections allowed for session (in
// BeginSession)
//
#define      MULTI_CONN_SESS     0x8000
//
// TII Channel States (returned by GetChanInfo)
//
#define      T_CHAN_NULL         0x00
#define      T_CHAN_SENDING      0x06
#define      T_CHAN_RECEIVING    0x07
```

HUAWEI EX. 1016 - 654/714

The functions utilized by comm API 510 are defined below. One or two groups of messages may be listed along with each function description: status messages and peer messages. A status message is a callback/message that the caller will receive in response to the function call. Peer messages are notifications that will be delivered to the peer application as a result of invoking the function.

Session Management

Functions in this section will initialize all the internal structures of the Comm sub-system and enable the application to initiate and receive calls.

BeginSession Initializes the software and hardware of the appropriate modules of the comm subsystem. It also designates the method that the comm subsystem is to use to notify the application of incoming calls and related events. Two types of event notification are supported: callbacks and messaging. The callback interface allows the comm system to call a user designated function to notify the application of incoming events. The messaging interface allows the comm system to notify the application of incoming events by posting messages to application message queues. The parameters to the function vary depending on the notification method chosen. BeginSession is not allowed in interrupt/callback contexts.

```
TSTATUS BeginSession   (LPTADDR lpLocalAddr, LPCONN_CHR
                       lpConnAttributes, WORD Flags, LPVOID
                       CallBack, LPHSESS lpSessionHandle)
```

lpLocalAddr Pointer to the local address at which to listen for incoming calls. The Listen stays in effect until the session is ended. Notification for all connection events for this local address will be sent to the specified Callback.

HUAWEI EX. 1016 - 655/714

lpConnAttributes Pointer to the Connection Attributes for incoming calls.

Flags: Indicates the type of notification to be used:
CALLBACK_FUNCTION for callback interface
CALLBACK_WINDOW for post message interface

CallBack: Either a pointer to a callback function, or a window handle to which messages will be posted, depending on flags. The "callBack" will become the "Session Handler" for this session.

lpSessionHandle Pointer to the Session Handle to be returned synchronously. This Session Handle is used by the application to initiate outgoing calls. It will also be returned to the Session Handler with incoming call notifications for this session.

Return values:
SUCESSFUL
DRIVER_NOT_INSTALLED
TOO_MANY_SESSIONS

Callback routine format:
FuncName(UINT Message, WPARAM wParam, LPARAM lParam)
Message: The message type
wParam: Word parameter passed to function
lParam: Long parameter passed to function

All the connection related activities are handled by the session handler.

The callback function parameters are equivalent to the second, third, and fourth parameters that are delivered to a Microsoft® Windows message handler function (Win 3.1).

Status Messages: none
Peer Messages: none

EndSession Closes all the open connections and prevents the application from receiving and originating calls for the specified session.

TSTATUS EndSession (HSESS SessionHandle, BOOL ForceClose)

SessionHandle Session Handle
ForceClose: If true, then close session even if reliable channels having pending operations are open.

Return values:

HUAWEI EX. 1016 - 656/714

SUCESSFUL	End session was successfully initiated.
RELIABLE_OPS_PENDING	Couldn't close due to uncompleted operations channels designated as reliable.

Status Messages:
SESS_CLOSED: EndSession complete.

Peer Messages: none

Connection Management

These calls provide the ULM the ability to establish and manage connections to its peers on the network.

MakeConnection Attempts to connect to a peer application. The Session Handler (callback routine or the message handler) for the specified Session will receive status of the connection. When the connection is accepted by the peer, the Connection Handle will be given to the Session Handler. The peer session will receive a CONN_REQUESTED callback/message as a result of this call.

TSTATUS MakeConnection (HSESS Sessionhandle, DWORD TransId, LPTADDR lpCalleeAddr, LPCONN_CHR lpConnAttributes, WORD TimeOut, WORD ChanMgrFlags, LPVOID ChanMgr)

SessionHandle	Handle for session, obtained via BeginSession.
TransId	User defined identifier which will be returned to the Session Handler along with the response notification.
lpCalleeAddr:	Pointer to the address structure (containing a phone number, IPaddress etc.) of callee.
lpConnAttributes	Pointer to the connection attributes.
TimeOut:	Number of seconds to wait for peer to pickup the phone.
ChanMgr:	The Channel Manager for this connection. This is either a pointer to a callback function, or a window handle to which messages will be posted, depending on chanMgrFlags. The Channel Manager may also be set up separately via RegisterChanMgr.

HUAWEI EX. 1016 - 657/714

ChanMgrflags: Indicates the type of notification to be used for the Channel Manager:
CALLBACK_FUNCTION for callback interface
CALLBACK_WINDOW for post message interface

Return values:

Status Messages (sent to the Session Handler):
CONN_ACCEPTED: The peer process has accepted the call
CONN_REJECTED: The Peer process has rejected the call
CONN_TIMEOUT: No answer from peer
CONN_BUSY: Called destination is busy.

Peer Messages:
CONN_REQUESTED

AcceptConnection Issued in response to a CONN_REQUESTED callback/message that has been received (as a consequence of a MakeConnection call issued by a peer). AcceptConnection notifies the peer that the connection request has been accepted. The local Session Handler will also receive an asynchronous notification when the Accept operation is complete.

TSTATUS AcceptConnection (HCONN hConn, WORD ChanMgrFlags, LPVOID ChanMgr)

hConn: Handle to the connection (received as part of the CONN_REQUESTED callback/message).
ChanMgr: The Channel Manager for this connection. This is either a pointer to a callback function, or a window handle to which messages will be posted, depending on ChanMgrFlags. The Channel Manager may also be set up separately via RegisterChanMgr.
ChanMgrflags: Indicates the type of notification to be used for the Channel Manager:
CALLBACK_FUNCTION for callback interface
CALLBACK_WINDOW for post message interface

Return values:
SUCESSFUL The Accept operation has been initiated.
HANDLE_INVALID The handle was invalid
REQUEST_WITHDRAWN The connect request was withdrawn (peer session was terminated).
NO_CONNECT_REQUEST There was no connect request to be accepted

HUAWEI EX. 1016 - 658/714

Status Messages:
CONN_ACCEPTED

Peer Messages:
CONN_ACCEPTED

RejectConnection Issued in response to a CONN_REQUESTED callback/message that has been received (as a consequence of a MakeConnection call issued by a peer). RejectConnection notifies the peer that the connection request has been rejected.

TSTATUS RejectConnection (HCONN hConn)

hConn: Handle to the connection (received as part of the CONN_REQUESTED callback/message).

Return values:

SUCESSFUL	Connection reject was returned to peer.
HANDLE_INVALID	The handle was invalid
REQUEST_WITHDRAWN	The connect request was withdrawn
NO_CONNECT_REQUEST	There was no connect request to be rejected

Status Messages: none

Peer Messages:
CONN_REJECTED

CloseConnection Closes the connection that was opened after an AcceptConnection or an accepted call after a MakeConnection function.

TSTATUS CloseConnection (HCONN hConn, BOOL Force, DWORD TransId)

hConn: Handle to the connection to be closed.
Force: If true, then close the connection regardless of any pending operations on reliable channels.
TransId User specified identifier which will be returned to the local Session Handler with the asynchronous response notification (CONN_CLOSE_RESP).

Return values:

SUCESSFUL	Disconnect initiated.
HANDLE_INVALID	The handle was invalid
NO_CONNECTION	Connection was not open
RELIABLE_OPS_PENDING	Could not close due to pending operations on channels designated as reliable.

HUAWEI EX. 1016 - 659/714

Status Messages:
CONN_CLOSE_RESP

Peer Messages:
CONN_CLOSED

RegisterChanMgr Registers a callback or an application window whose message processing function will handle low level notifications generated by data channel initialization operations. This function is invoked before any channels can be opened or accepted. As part of connection establishment (MakeConnection, AcceptConnection), a default Channel Manager may be installed for a connection. The RegisterChanMgr function allows the application to override the default Channel Manager for specific Channel IDs.

TSTATUS RegisterChanMgr (HCONN hConn, WORD Flags, LPVOID CallBack, WORD ChanId)

hConn: Handle to the Connection
Flags: Indicates the type of notification to be used:
CALLBACK_FUNCTION for callback interface
CALLBACK_WINDOW for post message interface
CallBack: Either a pointer to a callback function, or a window handle to which messages will be posted, depending on flags. All Channel Manager callbacks
ChanId Specifies the Channel Id for which the Channel Manager is being installed. It corresponds to the Channel Id Number specified in the CHAN_INFO structure; it is defined by the application and is not to be confused with the Channel Handle assigned by TII for a channel. A value of 0x0FFFF indicates all Channel Ids.

Return values:
SUCESSFUL Channel Manager registered.
HANDLE_INVALID The handle was invalid

Callback routine format:
FuncName (UINT Message, WPARAM wParam, LPARAM lParam)

Message: The message type
wParam: Word parameter passed to function
lParam: Long parameter passed to function

The callback function parameters are equivalent to the second, third, and fourth parameters that are delivered to a Microsoft® Windows message handler function (Win 3.1).

HUAWEI EX. 1016 - 660/714

Status Messages: none
Peer Messages: none

OpenChannel Requests a sub-channel connection from the peer application. The result of the action is given to the application by invoking the Channel Manager. The application specifies an ID for this transaction. This ID is returned to the Channel Manager when the request is complete, along with the Channel Handle (if the request was accepted by the peer). All OpenChanel requests are for establishing channels for sending data. The receive channels are opened as the result of accepting a peer's OpenChannel request.

TSTATUS OpenChannel (HCONN hConn, LPCHAN _INFO lpChanInfo, DWORD TransID)

hConn: Handle for the Connection.
lpChanInfo: Pointer to a channel information structure. Filled by application. The structure contains:
- o A channel ID number (application-defined).
- o Priority of this channel relative to other channels on this connection. Higher numbers represent higher priority.
- o Timeout value for the channel
- o Reliability of the channel.
- o Length of the channel specific field.
- o Channel specific information.

This structure is delivered to the Channel Manager on the peer side along with the CHAN_REQUESTED notification.

TransID: A user defined identifier that is returned with response messages to identify the channel request.

Return values:

SUCESSFUL	Channel request was sent.
HANDLE_INVALID	The Connection handle was invalid.
BANDWIDTH_NA	Bandwidth is not available.
NO_SESSION	BeginSession has not been called.
NO_CHAN_MGR	RegisterChanMgr has not been called.
CHAN_ID_INVALID	The channel number is not in the valid range
CHAN_INUSE	The channel number is already is use.

Status Messages:

CHAN_ACCEPTED:	The peer process has accepted request.
CHAN_REJECTED:	The Peer process has rejected request.
CHAN_TIMEOUT:	No answer from peer

HUAWEI EX. 1016 - 661/714

Peer Messages:
CHAN_REQUESTED

AcceptChannel A peer application can issue AcceptChannel in response to a CHAN_REQUESTED (OpenChannel) message that has been received. The result of the AcceptChannel call is a one-way communication sub-channel for receiving data.

TSTATUS AcceptChannel (HCHAN hChan, DWORD TransID)

hChan: Handle to the Channel (that was received as part of the CHAN_REQUESTED callback/message)
TransID: The identifier that was received as part of the CHAN_REQUESTED notification.

Return values:
SUCESSFUL Channel request was sent.
CHAN_INVALID The Channel handle was invalid

Status Messages: none

Peer Messages:
CHAN_ACCEPTED

RejectChannel Rejects an OpenChannel request (CHAN_REQUESTED message) from the peer.

TSTATUS RejectChannel (HCHAN hChan, DWORD TransID)

hChan: Handle to the Channel (that was received as part of the CHAN_REQUESTED callback/message)
TransID: The identifier that was received as part of the CHAN_REQUESTED message.

Return values:
SUCESSFUL Reject request was sent.
CHAN_INVALID The Channel handle was invalid.

Status Messages: none

Peer Messages:
CHAN_REJECTED

RegisterChanHandler Registers a callback or an application window whose message processing function will handle low level notifications generated by data channel IO activities. The channels that are opened will receive

HUAWEI EX. 1016 - 662/714

CHAN_DATA_SENT, and the accepted channels will receive CHAN_RECV_COMPLTE.

TSTATUS RegisterChanHandler (HCHAN hChan, WORD Flags, LPVOID CallBack)

hChan: Channel Handle.
Flags: Indicates the type of notification to be used:
CALLBACK_FUNCTION for callback interface
CALLBACK_WINDOW for post message interface
NOCALLBACK for polled status interface.
CallBack: Either a pointer to a callback function, or a window handle to which messages will be posted, depending on flags.

Return values:
SUCESSFUL Channel Handler installed.
CHAN_INVALID The Channel handle was invalid

Callback routine format:
FuncName (UINT Message, WPARAM wParam, LPARAM lParam)
Message: The message type
wParam: Word parameter passed to function (e.g. bytes received)
lParam: Long parameter passed to function

The callback function parameters are equivalent to the second, third, and fourth parameters that are delivered to a Microsoft® Windows message handler function (Win 3.1).

Status Messages: none
Peer Messages: none

CloseChannel Closes a sub-channel that was opened by AcceptChannel or Open Channel. The handler for this channel is automatically de-registered.

TSTATUS CloseChannel (HCHAN hChan, DWORD TransId)

hChan: The handle to the Channel to be closed.
~~TrasnId~~ TransId A user specified identifier that will be returned to the local Channel Manager along with the response notification (CHAN_CLOSE_RESP).

Return values:
SUCESSFUL Channel Close has been initiated.
CHAN_INVALID Invalid channel handle.

Status Messages:
CHAN_CLOSE_RESP

HUAWEI EX. 1016 - 663/714

Peer Messages:
CHAN_CLOSED

Data_Exchange

All the data communication is done in "message passing" fashion. This means that a send satisfies a receive on a specific channel, regardless of the length of the sent data and the receive buffer length. If the length of the sent message is greater than the length of the posted receive buffer, the data is discarded. All these calls are "asynchronous", which means that the data in the send buffer is not changed until a "data-sent" event has been sent to the application, and the contents of receive buffer are not valid until a "received-complete" event has been detected for that channel.

SendData Sends data to peer. If there are no receive buffers posted on the peer machine, the data will be lost.

TSTATUS SendData (HCHAN hChan, LPSTR Buffer, WORD Buflen, DWORD TransID)

hChan:	Handle to channel opened via OpenChannel.
Buffer:	A pointer to the buffer to be sent.
Buflen:	The length of the buffer in bytes.
TransID:	This is a user defined transaction ID which will be passed to the local channel handler along with the status message to identify the transaction.

Return values:

SUCESSFUL	Data queued for transmission.
CHAN_INVALID	Invalid channel handle.
CHAN_TRANFULL	Channel transaction table full.

Status Messages:

CHAN_DATA_SENT	Tells the application that the data has been extracted from the buffer and it is available for reuse.
CHAN_DATA_LOST	This message will be delivered to the caller if the data could not be sent.

HUAWEI EX. 1016 - 664/714

Peer Messages:
CHAN_DATA_LOST This message will be delivered to the peer if an adequate ReceiveData buffer is not posted.
CHAN_RECV_COMPLETE Indicates that data was received.

ReceiveData Data is received through this mechanism. Normally this call is issued in order to post receive buffers to the system. When the system has received data in the given buffers, the Channel Handler will receive a "CHAN_RECV_COMPLETE" notification.

TSTATUS ReceiveData (HCHAN hChan, LPSTR Buffer, WORD Buflen, DWORD TransID)

hChan: Handle to channel handle opened via AcceptChannel.
Buffer: A pointer to the buffer to be filled in.
Buflen: The length of the buffer in bytes. Max. bytes to receive.
TransID: This is a user defined transaction ID which will be passed to the channel handler along with the status message to identify the transaction. This ID and the number of bytes actually received are returned as part of the CHAN_RECV_COMPLETE notification.

Return values:
SUCESSFUL Receive buffer was posted.
CHAN_INVALID Invalid channel handle.
CHAN_TRANFULL Channel transaction table full.

Status Messages:
CHAN_RECV_COMPLETE Indicates that data was received.
CHAN_DATA_LOST This message will be delivered if the buffer is inadequate for a data message received from the peer.

Peer Messages:
none

Communications Statistics

GetTIIStats Return statistics for the TII subsystem. See TII_STATS structure for details.

TSTATUS FAR PASCAL _export GetChanStats (IN BOOL bResetFlag, OUT LP_TII_STATS lpTiiStats)

bResetFlag: Boolean Reset statistics if true.
lpTiiStats: Pointer to the TII_STATS structure.

HUAWEI EX. 1016 - 665/714

Alternative Embodiments

In a preferred embodiment of conferencing system **100**, video encoding is implemented on video board **204** and video decoding is implemented on host processor **202**. In an alternative preferred embodiment of the present invention, video encoding and decoding are both implemented on video board **204**. In another alternative preferred embodiment of the present invention, video encoding and decoding are bother implemented on the host processor.

In a preferred embodiment of conferencing system **100**, audio processing is implemented by audio task **538** on audio/comm board **206**. In an alternative preferred embodiment of the present invention, audio processing is implemented by Wave driver **524** on host processor **202**.

In a preferred embodiment, conferencing systems **100** communicate over an ISDN network. In alternative preferred embodiments of the present invention, alternative transport media may be used such as Switch **56**, a local area network (LAN), or a wide area network (WAN).

In a preferred embodiment, two conferencing systems **100** participate in a conferencing session. In alternative preferred embodiments of the present invention, two or more conferencing systems **100** may participate in a conferencing session.

In a preferred embodiment, the local sources of analog video and audio signals are a camera and a microphone, respectively. In alternative preferred embodiments of the present invention, analog audio and/or video signals may have alternative sources such as being generated by a VCR or CD-ROM player or received from a remote source via antenna or cable.

In a preferred embodiment, conferencing system **100** compresses and decompresses video using the IRV method for purposes of video conferencing. Those skilled in the art will understand that the IRV method of video compression and decompression is not limited to video conferencing, and may be used for other applications and other systems that rely on or utilize compressed video.

In a preferred embodiment, conferencing system **100** compresses and decompresses video using the IRV method. Those skilled in the art will understand that alternative conferencing systems within the scope of the present invention may use methods other than the IRV method for compressing and decompressing video signals.

In a preferred embodiments conferencing system **100** uses the IRV method to compress and decompress a sequence of video images. In alternative embodiments of the present invention, the IRV method may be used to compress and/or decompress a single image either in a conferencing system or in some other application.

It will be further understood that various changes in the details, materials, and arrangements of the parts which have been described and illustrated in order to explain the nature of this invention may be made by those skilled in the art without departing from the principle and scope of the invention as expressed in the following claims.

What is claimed is:

1. A computer-implemented process for encoding video signals, comprising the steps of:

(a) encoding one or more training video frames using a selected quantization level to generate one or more encoded training video frames;

(b) decoding the encoded training video frames to generate one or more decoded training video frames;

(c) generating one or more energy measure values corresponding to the decoded training video frames;

(d) performing steps (a)–(c) for a plurality of quantization levels;

(e) selecting an energy measure threshold value for each of the quantization levels in accordance with the decoded training video frames;

(f) generating a first reference frame corresponding to a first video frame;

(g) encoding a block of a second video frame using the first reference frame and a selected quantization level to generate a block of an encoded second video frame;

(h) decoding the block of the encoded second video frame to generate a block of a second reference frame, wherein step (h) comprises the steps of:

(1) generating an energy measure value corresponding to the block of the encoded second video frame;

(2) comparing the energy measure value of step (h)(1) with the energy measure threshold value of step (e) corresponding to the selected quantizatio.. level for the block; and

(3) applying a filter to generate the block of the second reference frame in accordance with the comparison of step (h)(2); and

(i) encoding a third video frame using the second reference frame.

2. The process of claim **1**, wherein:

step (g) comprises the steps of:

(1) generating pixel differences between the block of the second video frame and the first reference frame; and

(2) encoding the block of the second video frame in accordance with the pixel differences to generate the block of the encoded second video frame; and

step (h)(1) comprises the steps of:

(i) decoding the block of the encoded second video frame to generate decoded pixel differences; and

(ii) generating the energy measure value corresponding to the block of the encoded second video frame using the pixel differences.

3. The process of claim **2**, wherein step (h)(3) comprises the steps of:

(i) applying the filter to a block of the first reference frame; and

(ii) adding the decoded pixel differences to the filtered block of the first reference frame to generate the block of the second reference frame.

4. The process of claim **2**, wherein step (h)(3) comprises the steps of:

(i) adding the decoded pixel differences to a block of the first reference frame to generate a reconstructed block; and

(ii) applying the filter to the reconstructed block to generate the block of the second reference frame.

5. The process of claim **2**, wherein:

the encoded second video frame is generated using motion estimation;

the second reference frame is generated using motion compensation;

the filter comprises a spatial filter; and

the energy measure comprises a sum of absolute differences.

6. The process of claim **1**, wherein the encoded second video frame is generated using motion estimation and the second reference frame is generated using motion compensation.

7. The process of claim **1**, wherein the filter comprises a spatial filter.

8. The process of claim **1**, wherein the energy measure comprises a sum of absolute differences.

9. An apparatus for encoding video signals, comprising:

(a) means for encoding one or more training video frames using a selected quantization level to generate one or more encoded training video frames;

HUAWEI EX. 1016 - 666/714

(b) means for decoding the encoded training video frames to generate one or more decoded training video frames;

(c) means for generating one or more energy measure values corresponding to the decoded training video frames, wherein the processing of means (a)–(c) is performed for a plurality of quantization levels and an energy measure threshold value is selected for each of the quantization levels in accordance with the decoded training video frames;

(d) means for generating a first reference frame corresponding to a first video frame;

(e) means for encoding a block of a second video frame using the first reference frame and a selected quantization level to generate a block of an encoded second video frame;

(f) means for decoding the block of the encoded second video frame to generate a block of a second reference frame, wherein means (f) comprises:

(1) means for generating an energy measure value corresponding to the block of the encoded second video frame;

(2) means for comparing the energy measure value of means (f)(1) with the energy measure threshold value corresponding to the selected quantization level for the block; and

(3) means for applying a filter to generate the block of the second reference frame in accordance with the comparison of means (f)(2); and

(i) means for encoding a third video frame using the second reference frame.

10. The apparatus of claim **9**, wherein:

means (e) comprises:

(1) means for generating pixel differences between the block of the second video frame and the first reference frame; and

(2) means for encoding the block of the second video frame in accordance with the pixel differences to generate the block of the encoded second video frame; and

means (f)(1) comprises:

(i) means for decoding the block of the encoded second video frame to generate decoded pixel differences; and

(ii) means for generating the energy measure value corresponding to the block of the encoded second video frame using the pixel differences.

11. The apparatus of claim **10**, wherein means (f)(3) comprises:

(i) means for applying the filter to a block of the first reference frame; and

(ii) means for adding the decoded pixel differences to the filtered block of the first reference frame to generate the block of the second reference frame.

12. The apparatus of claim **10**, wherein means (f)(3) comprises:

(i) means for adding the decoded pixel differences to a block of the first reference frame to generate a reconstructed block; and

(ii) means for applying the filter to the reconstructed block to generate the block of the second reference frame.

13. The apparatus of claim **10**, wherein:

the encoded second video frame is generated using motion estimation;

the second reference frame is generated using motion compensation;

the filter comprises a spatial filter; and

the energy measure comprises a sum of absolute differences.

14. The apparatus of claim **10**, wherein the apparatus comprises a pixel processor, the pixel processor is electrically connected to a bus, and the bus is electrically connected to a memory device.

15. The apparatus of claim **9**, wherein the encoded second video frame is generated using motion estimation and the second reference frame is generated using motion compensation.

16. The apparatus of claim **9**, wherein the filter comprises a spatial filter.

17. The apparatus of claim **9**, wherein the energy measure comprises a sum of absolute differences.

18. The apparatus of claim **9**, wherein the apparatus comprises a pixel processor, the pixel processor is electrically connected to a bus, and the bus is electrically connected to a memory device.

19. A computer-implemented process for encoding video signals, comprising the steps of:

(a) generating a first reference frame corresponding to a first video frame;

(b) encoding a block of a second video frame using the first reference frame and a selected quantization level to generate a block of an encoded second video frame;

(c) decoding the block of the encoded second video frame to generate a block of a second reference frame, wherein step (c) comprises the steps of:

(1) generating an energy measure value corresponding to the block of the encoded second video frame;

(2) comparing the energy measure value of step (c)(1) with an energy measure threshold value corresponding to the selected quantization level for the block; and

(3) applying a filter to generate the block of the second reference frame in accordance with the comparison of step (c)(2); and

(d) encoding a third video frame using the second reference frame, wherein the energy measure threshold value corresponding to the selected quantization level for the block having been determined by:

encoding one or more training video frames using each of a plurality of quantization levels to generate a plurality of encoded training video frames;

decoding the encoded training video frames to generate a plurality of decoded training video frames;

generating a plurality of energy measure values corresponding to the decoded training video frames; and

selecting an energy measure threshold value for each of the quantization levels in accordance with the decoded training video frames.

20. The process of claim **19**, wherein:

step (b) comprises the steps of:

(1) generating pixel differences between the block of the second video frame and the first reference frame; and

(2) encoding the block of the second video frame in accordance with the pixel differences to generate the block of the encoded second video frame; and

step (c)(1) comprises the steps of:

(i) decoding the block of the encoded second video frame to generate decoded pixel differences; and

(ii) generating the energy measure value corresponding to the block of the encoded second video frame using the pixel differences.

21. The process of claim **20**, wherein step (c)(3) comprises the steps of:

HUAWEI EX. 1016 - 667/714

(i) applying the filter to a block of the first reference frame; and

(ii) adding the decoded pixel differences to the filtered block of the first reference frame to generate the block of the second reference frame.

22. The process of claim **20**, wherein step (c)(3) comprises the steps of:

(i) adding the decoded pixel differences to a block of the first reference frame to generate a reconstructed block; and

(ii) applying the filter to the reconstructed block to generate the block of the second reference frame.

23. The process of claim **20**, wherein:

the encoded second video frame is generated using motion estimation;

the second reference frame is generated using motion compensation;

the filter comprises a spatial filter; and

the energy measure comprises a sum of absolute differences.

24. The process of claim **19**, wherein the encoded second video frame is generated using motion estimation and the second reference frame is generated using motion compensation.

25. The process of claim **19**, wherein the filter comprises a spatial filter.

26. The process of claim **19**, wherein the energy measure comprises a sum of absolute differences.

27. An apparatus for encoding video signals, comprising:

(a) means for generating a first reference frame corresponding to a first video frame;

(b) means for encoding a block of a second video frame using the first reference frame and a selected quantization level to generate a block of an encoded second video frame;

(c) means for decoding the block of the encoded second video frame to generate a block of a second reference frame, wherein means (c) comprises:

(1) means for generating an energy measure value corresponding to the block of the encoded second video frame;

(2) means for comparing the energy measure value of means (c)(1) with an energy measure threshold value corresponding to the selected quantization level for the block; and

(3) means for applying a filter to generate the block of the second reference frame in accordance with the comparison of means (c)(2); and

(d) means for encoding a third video frame using the second reference frame, wherein the energy measure threshold value corresponding to the selected quantization level for the block having been determined by:

encoding one or more training video frames using each of a plurality of quantization levels to generate a plurality of encoded training video frames;

decoding the encoded training video frames to generate a plurality of decoded training video frames;

generating a plurality of energy measure values corresponding to the decoded training video frames; and

selecting an energy measure threshold value for each of the quantization levels in accordance with the decoded training video frames.

28. The apparatus of claim **27**, wherein:

means (b) comprises:

(1) means for generating pixel differences between the block of the second video frame and the first reference frame; and

(2) means for encoding the block of the second video frame in accordance with the pixel differences to generate the block of the encoded second video frame; and

means (c)(1) comprises:

(i) means for decoding the block of the encoded second video frame to generate decoded pixel differences; and

(ii) means for generating the energy measure value corresponding to the block of the encoded second video frame using the pixel differences.

29. The apparatus of claim **28**, wherein means (c)(3) comprises:

(i) means for applying the filter to a block of the first reference frame; and

(ii) means for adding the decoded pixel differences to the filtered block of the first reference frame to generate the block of the second reference frame.

30. The apparatus of claim **28**, wherein means (c)(3) comprises:

(i) means for adding the decoded pixel differences to a block of the first reference frame to generate a reconstructed block; and

(ii) means for applying the filter to the reconstructed block to generate the block of the second reference frame.

31. The apparatus of claim **28**, wherein:

the encoded second video frame is generated using motion estimation;

the second reference frame is generated using motion compensation;

the filter comprises a spatial filter; and

the energy measure comprises a sum of absolute differences.

32. The apparatus of claim **28**, wherein the apparatus comprises a pixel processor, the pixel processor is electrically connected to a bus, and the bus is electrically connected to a memory device.

33. The apparatus of claim **27**, wherein the encoded second video frame is generated using motion estimation and the second reference frame is generated using motion compensation.

34. The apparatus of claim **27**, wherein the filter comprises a spatial filter.

35. The apparatus of claim **27**, wherein the energy measure comprises a sum of absolute differences.

36. The apparatus of claim **27**, wherein the apparatus comprises a pixel processor, the pixel processor is electrically connected to a bus, and the bus is electrically connected to a memory device.

37. A computer-implemented process for decoding video signals, comprising the steps of:

(a) decoding an encoded first video frame to generate a first reference frame;

(b) decoding a block of an encoded second video frame to generate a block of a second reference frame, wherein step (b) comprises the steps of:

(1) generating an energy measure value corresponding to the block of the encoded second video frame;

(2) comparing the energy measure value of step (b)(1) with an energy measure threshold value corresponding to a selected quantization level for the block; and

(3) applying a filter to generate the block of the second reference frame in accordance with the comparison of step (b)(2); and

(c) decoding an encoded third video frame using the second reference frame, wherein the energy measure

HUAWEI EX. 1016 - 668/714

threshold value corresponding to the selected quantization level for the block having been determined by:

encoding one or more training video frames using each of a plurality of quantization levels to generate a plurality of encoded training video frames;

decoding the encoded training video frames to generate a plurality of decoded training video frames;

generating a plurality of energy measure values corresponding to the decoded training video frames; and

selecting an energy measure threshold value for each of the quantization levels in accordance with the decoded training video frames.

38. The process of claim **37**, wherein step (b)(1) comprises the steps of:

(i) decoding the block of the encoded second video frame to generate decoded pixel differences; and

(ii) generating the energy measure value corresponding to the block of the encoded second video frame using the pixel differences.

39. The process of claim **38**, wherein step (b)(3) comprises the steps of:

(i) applying the filter to a block of the first reference frame; and

(ii) adding the decoded pixel differences to the filtered block of the first reference frame to generate the block of the second reference frame.

40. The process of claim **38**, wherein step (b)(3) comprises the steps of:

(i) adding the decoded pixel differences to a block of the first reference frame to generate a reconstructed block; and

(ii) applying the filter to the reconstructed block to generate the block of the second reference frame.

41. The process of claim **38**, wherein:

the encoded second video frame is generated using motion estimation;

the second reference frame is generated using motion compensation;

the filter comprises a spatial filter; and

the energy measure comprises a sum of absolute differences.

42. The process of claim **37**, wherein the encoded second video frame is generated using motion estimation and the second reference frame is generated using motion compensation.

43. The process of claim **37**, wherein the filter comprises a spatial filter.

44. The process of claim **37**, wherein the energy measure comprises a sum of absolute differences.

45. An apparatus for decoding video signals, comprising:

(a) means for decoding an encoded first video frame to generate a first reference frame;

(b) means for decoding a block of an encoded second video frame to generate a block of a second reference frame, wherein means (b) comprises:

(1) means for generating an energy measure value corresponding to the block of the encoded second video frame;

(2) means for comparing the energy measure value of means (b)(1) with an energy measure threshold value corresponding to a selected quantization level for the block; and

(3) means for applying a filter to generate the block of the second reference frame in accordance with the comparison of means (b)(2); and

(c) means for decoding an encoded third video frame using the second reference frame, wherein the energy measure threshold value corresponding to the selected quantization level for the block having been determined by:

encoding one or more training video frames using each of a plurality of quantization levels to generate a plurality of encoded training video frames;

decoding the encoded training video frames to generate a plurality of decoded training video frames;

generating a plurality of energy measure values corresponding to the decoded training video frames; and

selecting an energy measure threshold value for each of the quantization levels in accordance with the decoded training video frames.

46. The apparatus of claim **45**, wherein means (b) (1) comprises:

(i) means for decoding the block of the encoded second video frame to generate decoded pixel differences; and

(ii) means for generating the energy measure value corresponding to the block of the encoded second video frame using the pixel differences.

47. The apparatus of claim **46**, wherein means (b) (3) comprises:

(i) means for applying the filter to a block of the first reference frame; and

(ii) means for adding the decoded pixel differences to the filtered block of the first reference frame to generate the block of the second reference frame.

48. The apparatus of claim **46**, wherein means (b)(3) comprises:

(i) means for adding the decoded pixel differences to a block of the first reference frame to generate a reconstructed block; and

(ii) means for applying the filter to the reconstructed block to generate the block of the second reference frame.

49. The apparatus of claim **46**, wherein:

the encoded second video frame is generated using motion estimation;

the second reference frame is generated using motion compensation;

the filter comprises a spatial filter; and

the energy measure comprises a sum of absolute differences.

50. The apparatus of claim **46**, wherein the apparatus comprises a host processor, the host processor is electrically connected to a bus, and the bus is electrically connected to a memory device.

51. The apparatus of claim **45**, wherein the encoded second video frame is generated using motion estimation and the second reference frame is generated using motion compensation.

52. The apparatus of claim **45**, wherein the filter comprises a spatial filter.

53. The apparatus of claim **45**, wherein the energy measure comprises a sum of absolute differences.

54. The apparatus of claim **45**, wherein the apparatus comprises a host processor, the host processor is electrically connected to a bus, and the bus is electrically connected to a memory device.

* * * * *

HUAWEI EX. 1016 - 669/714

UNITED STATES PATENT AND TRADEMARK OFFICE

CERTIFICATE OF CORRECTION

PATENT NO. : 5,488,570
DATED : January 30, 1996
INVENTOR(S) : Rohit Agarwal

It is certified that error appears in the above-indentified patent and that said Letters Patent is hereby corrected as shown below:

Column 54 line 1, delete "$\neq \frac{16 \text{Samples}}{\text{word}}$" and insert therefore -- $\div 16 \frac{\text{Samples}}{\text{word}}$ --.

Signed and Sealed this
Eighth Day of October, 1996

Bruce Lehman

Attest:

Attesting Officer

BRUCE LEHMAN
Commissioner of Patents and Trademarks

HUAWEI EX. 1016 - 670/714

65373 U.S. PTO
02/24/97

4/a
3/11/97

PATENT APPLICATION
Do. No. 1094893-1

In The United States Patent and Trademark Office

In re application of: Beretta, et al.	
Application No. 08/411,369	Examiner: Johnson, B.
Filed: March 27, 1995	Group Art Unit: 2616
For: TEXT AND IMAGE SHARPENING OF JPEG COMPRESSED IMAGES IN FREQUENCY DOMAIN	***AMENDMENT***

RECEIVED
97 MAR -5 PM 1:21
GROUP 260

Date: February 10, 1997

Commissioner of Patents and Trademarks,
Washington, D.C. 20231

Applicants respond to the Office Action, dated November 18, 1996, as follows.

In the Claims:

Claim 1, line 15, after "(Q_D)" insert --related to but--.

Please cancel claim 24 without prejudice.

Remarks

Claims 1-36 are pending. Claims 25-36 are rejected under 35 USC §112, second paragraph, as being indefinite. Claims 1-3, 5-9, 14-17, 20-24, 29 and 34-36 are rejected under 35 USC §103(a) as being unpatentable over Sugiura (5,465,164) in view of Agarwal (5,488,570). Claims 4, 10-13, 18, 25-28, and 30-33 are rejected under 35 USC §103(a) as being unpatentable over Sugiura (5,465,164) and Agarwal

HUAWEI EX. 1016 - 671/714

(5,488,570), further in view of Tzou (4,776,030). Claim 19 is rejected under 35 USC §103(a) over Sugiura (5,465,164) and Agarwal (5,488,570), further in view of Applicant's admissions of the prior art.

Claims 25-36 are definite under 35 USC §112, second paragraph.

In paper 3, paragraph 1, the Examiner states the following:

The claims refer to the JPEG compression standard. However, the specification does not indicate which JPEG compression standard is being referenced. Unless the date and citation number of the standard are provided the claims will remain indefinite due to the indefinite reference.

Applicants traverse the rejection. The Examiner's attention is directed to page 6, lines 11-13, wherein the document describing the JPEG compression standard is identified. Applicants submit that claims 25-36 comply with the requirements of 35 U.S.C. §112.

Claims 1-3, 5-9, 14-17, 20-24, 29 and 34-36 are patentable under 35 USC §103(a) over Sugiura (5,465,164) in view of Agarwal (5,488,570).

In paper 3, paragraph 3, the Examiner states the following:

As to representative claims 14 and 15, and claims 1-3, 5-9, 29 and 34-36, Sugiura teaches a method of compressing and transmitting images which produces decompressed images having improved text and image quality, the method comprising:

compressing a source image into compressed image data using a first quantization table (Qe) (Quantization Table 105 of Fig. 1);

forming a second quantization table (Qd), wherein the second quantization table is related to the first quantization table (Inverse Quantization Table 115 of fig. 1);

transmitting the compressed image data (Interfaces 109 and 111, Communications Circuit 110 of fig. 1);

HUAWEI EX. 1016 - 672/714

decompressing the compressed image data using the second quantization table Qd (Inverse Quantization 114 and Inverse Quantization Table 115 of fig. 1)

The Examiner acknowledges that Sugiura does not explicitly teach that the second quantization table is related to the first quantization table scaled in accordance with a predetermined function of the energy in a reference image and the energy in a scanned image.

The Examiner asserts, however, that Agarwal teaches decompressing (decoding) a second video frame by relating (comparing) the energy of the scanned image (block of the encoded second video frame) to the energy of a reference image (corresponding to the scaled quantization level for the block where the energy for the quantization level is selected in accordance with training video frames) (col. 1, lines 35-60). The Examiner then concludes that it would have been obvious to a person of ordinary skill at the time of the invention for Sugiura to decompress using a quantization table scaled in accordance with a predetermined function of the energy in a reference image and the energy in a scanned image as taught by Agarwal in order to decrease quantization errors.

As to claims 16 and 17, the Examiner states that Sugiura teaches that the second quantization table (Inverse Quantization Table) is determined independent of the order of transmission (fig. 1). The Examiner argues that it would have been obvious to a person of ordinary skill in the art at the time of the invention to scale prior or subsequent to the transmission step since the second quantization table is determined independent of the order of transmission.

The Examiner states, as to claims 20-23, that selecting a target image; rendering the target image into an image file; the target image having elements critical to the quality of the image are inherent in using a reference to control the quality of the compression process. The Examiner asserts that images which have text including text with a serif font are well known in the art (official notice).

The Examiner states, as to claim 24, that in using a reference image to control the quality of the compression process of a scanned image it would have been obvious to a person of ordinary skill in the art at the time of the invention that

HUAWEI EX. 1016 - 673/714

scanned image could be the reference image since the reference image is readily available to be a scanned image and would serve as a check of the quality assurance steps.

Claim 1 is amended to recite that the first and second tables are related but nonidentical. Claim 24 has been cancelled. In regard to the remaining claims, Applicants respectfully traverse the rejections. Nothing in the Sugiura and Agarwal references relied upon by the Examiner, either alone or in combination, teaches or suggests the second quantization table Q_D, that is *nonidentical* to the first quantization table Q_E used to quantize the image data and which is encapsulated and transmitted with the quantized image data, as in the present invention.

The machine of claim 1 for transmitting color images includes a compression engine that includes a quantizer means for converting the transformed image data into quantized image data, means for storing a second multi-element quantization table and further includes means for encapsulating the encoded image data and the second quantization table to form an encapsulated data file and still further includes a means for transmitting the encapsulated data file. Claim 14 recites a method including the steps of forming a second quantization table (Q_D), wherein the second quantization table is related to the first quantization table in accordance with a predetermined function of the energy in a reference image and the energy in a scanned image, and the step of decompressing the compressed image data using the second quantization table. Claim 25 recites a method including the step of forming a second quantization table, where the second quantization table is related to the first quantization table according to the expression $Q_D = S \times Q_E$. Claim 29 recites a method including the step of scaling the first quantization table to for a second quantization table, compressing a source image in accordance with the JPEG standard using the first quantization table, and decompressing the source image in accordance with the JPEG standard using the second quantization table.

In contrast, the references relied upon appear to be directed toward an improved first quantization table wherein the same table is used both to quantize and inverse quantize the image data. Whereas the Examiner characterizes Inverse

HUAWEI EX. 1016 - 674/714

Quantization Table 115 of Fig. 1 in Sugiura as the second quantization table Q_D of the present invention, Applicants are unable to find anything in Sugiura that appears to support that assertion. The Examiner's acknowledgement of the fact that Sugiura does not teach a second quantization table related to the first table supports Applicants' position.

Sugiura, in fact, appears to be precisely the type of conventional device discussed by Applicants at pp. 1-6 of the specification that utilizes the same quantization table for both quantization and inverse quantization. The Examiner's attention is directed to Fig. 1 of the Specification which illustrates a prior art device that appears to be identical to the ADCT UNIT of Fig. 1 of Sugiura. Further, Fig. 3 of the Specification appears to be identical to the functional blocks shown in the lower half of Sugiura's Fig. 1. As described in Applicant's specification, the conventional art device performs quantization 20 on source image data using quantization tables 24. The quantization tables are then encapsulated along with the compressed data into a JPEG data message, as shown in Fig. 2 of the specification. The quantization tables 48 are then extracted from the JPEG message headers and used to inverse quantize 54 the compressed image data. Fig. 1 of Sugiura appears to indicate that Sugiura is a conventional device as already identified and distinguished over Applicants' claims.

The Examiner further relies upon Agarwal to teach decompressing a second video frame by relating the energy of the scanned image to the energy of a reference image. However, the cited reference is directed toward a video-conferencing system that uses *temporal information* to reduce quantization error effects. (See Agarwal at col. 1, ll. 45-50 and ll. 60-65, col. 27, ll. 40-45, col. 36, ll. 59-65, col. 188, ll. 21-32, and col. 118, l. 33 to col. 119, l. 10). The present invention, by contrast, is directed toward *still-image* compression. There is no temporal information present in a still-image. Even if the invention were used for successive images, in which Agarwal's use of temporal information could be useful, Agarwal still does not use or suggest use of a second multi-element quantization table as recited. In other words,

HUAWEI EX. 1016 - 675/714

Agarwal does not supply the missing element. Therefore, the teachings of Agarwal are inapplicable to the present invention.

In light of the above, Applicants submit that nothing in Sugiura and Agarwal, alone or in combination, teaches or suggests the second quantization table Q_D of the present invention, as recited in independent claim 1, from which claims 2, 3 and 5-9 depend; in independent claim 14, from which claims 15-17 and 20-24 depend; and in independent claim 29, from which claims 34-36 depend. Accordingly, these claims are patentable over the cited references.

In addition, in regard to claims 16 and 17, the Examiner has overlooked the significance of the features of the invention as claimed. By performing the step of scaling the first quantization in accordance with the predetermined function prior to the transmitting step, as recited in claim 16, the method of the present invention may be used in transmitting images to a conventional decompression engine which can decompress the image with improved image quality but without making changes to the conventional decompression engine. (Spec. p. 17, ll. 3-10). Similarly, performing the step of scaling the first quantization in accordance with the predetermined function subsequent to the transmission step, as recited in claim 17, permits the present method to be utilized to improve the image quality of an image transmitted from a conventional device. (Spec. p. 17, l. 14, to p. 18, l. 4). These features of the present invention as recited in claims 16 and 17 provide these claims with separate grounds for patentability in addition to those discussed above.

Claims 4, 10-13, 18, 25-28, and 30-33 are patentable under 35 USC §103(a) over Sugiura (5,465,164) and Agarwal (5,488,570) as well as Tzou (4,776,030).

The Examiner states, as to representative claim 18, and claims 4, 10-13, 25-28, and 30-33, that Sugiura does not explicitly teach the use of the variance in the scaling factor to reduce the quantization error. Tzou teaches that in an adaptive system the quantization of an image is ordered according to the variance of the image coefficients to reduce quantization error (col. 2, lines 21-42). The Examiner concludes that it would have been obvious to a person of ordinary skill in the art the

HUAWEI EX. 1016 - 676/714

time of the invention to use the image variances as taught by Tzou with the reference and scanned image to arrive at the scaling factor of Sugiura and Agarwal in order to reduce quantization error.

Applicants traverse this rejection. As with the Sugiura and Agarwal references addressed above, Tzou is also directed toward reducing artifacts due to the quantization errors introduced by a quantizer, as noted by the Examiner and discussed in Tzou (Abstract, ll. 3-5, col. 2, ll. 22-55). Tzou appears to utilize the same table for both quantization and inverse quantization of image data. The arguments above therefore apply equally to Tzou in that Tzou is directed toward improving the quantization table Q_E but does not teach or suggest the second quantization table Q_D of the present invention.

The present invention, in contrast, is not directed at reducing quantization errors but at improving the quality of the reproduced scanned image by restoring the image variance that existed in the image *prior to scanning*. The present invention is complementary to the teachings of Sugiura, Agarwal and Tzou in that the techniques of the cited references can be used to design quantization tables (Q_E) to reduce quantization artifacts and the teachings of the present invention may then be applied to scale the quantization tables of the conventional art in order to sharpen and further improve the quality of the scanned image.

To understand standard JPEG decoders and the teachings of Sugiura, let $Y[k]$ be the k-th element of a block (in zig-zag order). If $Q_E[k]$ is the corresponding quantization coefficient, then the output of a conventional quantizer is generated by performing:

$$Y_Q[k] = Integer\ Round(Y[k] / Q_E[k]). \qquad (1)$$

In standard JPEG coders, Q_E is transmitted with the data and thus $Q_D = Q_E$. If

HUAWEI EX. 1016 - 677/714

$$r[k] = Y[k] - Q_E[k]Y_Q[k], \qquad (2)$$

then Sugiura proposes the following quantization scheme:

$$Y_Q[k] = \text{Integer Round}[(Y[k] + r[k - 1])/Q_E[k]]. \qquad (3)$$

Sugiura then transmits Q_E with the coded data.

In the present invention, equation 1 above is used to compute $Y_Q[k]$. However, the quantization table transmitted with the coded data is Q_D, as defined in the preferred embodiment by

$$Q_D = S \times Q_E + B, \qquad (4)$$

where S is the scaling matrix which restores the variance of the JPEG compressed image to that of the reference image. Q_D is related to but nonindentical to Q_E, as recited in the claims.

In a standard JPEG device, equation 1 is used and Q_E is transmitted to the decoder. In Sugiura, equation 3 is used to improve the quantization, but it is still Q_E that is transmitted to the decoder. The present invention generates Q_D from equation 4 and sends it, along with the compressed image data, to the decoder.

What is important to note is that *the reference image is an original image rendered into ideal digital form by software, not a scanned image subject to the image degradation inherent in the scanner*. (Spec. p. 9, ll. 15--28). Therefore, using the quantization table Q_D of the present invention to decompress the transmitted image produces a decompressed image that has approximately the same variance as the reference image, rather than the variance of the scanned image whose high frequency characteristics were degraded by the scanner. (Spec. p. 13, ll. 2-15).

In addition, none of the references cited above, alone or in combination, discloses the scaling matrix of claims 4, 10, 25 or 32, wherein the scaling matrix is

HUAWEI EX. 1016 - 678/714

based upon the variance matrix of the reference image and the variance matrix of the scanned image. The cited references are directed toward an improved quantization matrix for quantizing a scanned image, wherein the scanned image is subject to the inherent distortion of the scanner, rather than the reference image of the present invention that has not been scanned and which therefore contains the full variance of the reference image. Therefore, the scaling matrix of claims 4, 10, 25 and 32 represents a separate ground for patentability.

In light of the above, Applicants submit that nothing in Sugiura, Agarwal and Tzou, alone or in combination, in any way teaches or suggests the quantization table Q_D or the scaling matrix of the present invention.

Claim 19 is patentable under 35 USC §103(a) over Sugiura (5,465,164) and Agarwal (5,488,570) and Applicant's admissions of the prior art.

As to claim 19, the Examiner acknowledges that Sugiura and Agarwal do not explicitly teach encapsulating the second quantization table Qd with the compressed image data to form an encapsulated data file and then transmitting the data file but asserts that Applicant admits that the prior art teaches that the data includes the quantization tables for use in the decompression process (p. 5, lines 1-6). The Examiner concludes that it would have been obvious to a person of ordinary skill in the art to include the quantization table which will be used in the decompression process in the transmitted data file as taught by the prior art for the data file of Sugiura and Agarwal where the second quantization table would be used to decompress.

Applicants traverse this rejection. As discussed above, the references relied upon do not teach or suggest the second quantization table of the present invention. As regards Applicants' description of the prior art, the Sugiura reference appears to disclose precisely the type of conventional device discussed by Applicants (Spec. pp. 1-6). The addition of Applicants' description of the prior art, therefore, adds nothing to the combination of Sugiura and Agarwal. In addition, Agarwal notes that the

HUAWEI EX. 1016 - 679/714

intra/inter decision is known to both the encoder and decoder and therefore "does not need to be explicitly transmitted". (See Agarwal at col. 119, ll. 11-15). This appears to teach away from encapsulating and transmitting the second quantization table, as recited in claim 19. The addition of the Applicants' description of the prior art to an already deficient combination of Sugiura and Agarwal does not teach or suggest Applicants' second quantization table, as recited in claim 14 from which claim 19 depends. Therefore neither the cited prior art nor Applicants' summary of it teach the additional refinements of encapsulating and transmitting the second quantization table to decompress the compressed image data, as recited in claim 19.

In addition, in concluding that it would have been obvious to a person of ordinary skill in the art to include the quantization table which will be used in the decompression process in the transmitted data file as taught by the prior art, the Examiner has missed the point of one of the key features of the present invention. As the Applicant has detailed in regard to the conventional art, *conventional devices presently send the quantization table that is used to decompress the compressed image data.* An important feature of the present invention is its ability to exploit this characteristic of the conventional art to produce a decompressed image with approximately the same variance as the reference image when transmitting the compressed image to a conventional device. (Spec. p. 17, ll. 3-10). In the present invention, the second quantization table is substituted for the first quantization table in the encapsulated data file that is transmitted to a conventional device (Spec. Fig. 5). The conventional decompression engine then transparently uses the second quantization table to decompress the image data (Spec. Fig. 3) and, in so doing, restores the variance in the reproduced image to approximately that of the reference image. No changes to the conventional decompression engine are required and no additional computation in the decompression engine is necessary to improve the quality of the reproduced image. Reconsideration of claim 19 in its entirety will demonstrate that the claimed invention is patentable over Sugiura and Agarwal, further in view of Applicants' description of the prior art.

HUAWEI EX. 1016 - 680/714

In view of the foregoing amendments and remarks, Applicants respectfully submit that the application is now in condition for allowance and action to that end is requested.

Please address all future communications to:

Records Manager
Legal Department, 20BO
Hewlett-Packard Company
P.O. Box 10301
Palo Alto, California 94303-0890

Direct all telephone calls to:

Pehr Jansson
(415) 857-7533

Respectfully submitted,

GIORDANO BERETTA, et al.

By _____
Pehr Jansson
Registration No. 35,759
Attorney for Applicant

Records Manager
Legal Department, 20BO
Hewlett-Packard Company
P.O. Box 10301
Palo Alto, California 94303-0890

HUAWEI EX. 1016 - 681/714

HEWLETT-PACKARD COMPANY
Legal Department, 20BN
P. O. Box 10301
Palo Alto, California 94303-0890

65373 U.S. PTO
02/24/97

PATENT APPLICATION

ATTORNEY DOCKET NO. 1094893-1

IN THE
UNITED STATES PATENT AND TRADEMARK OFFICE

Inventor(s): Giordano Beretta et al.

Serial No.: 08/411,369 **Examiner:** B. Johnson

Filing Date: March 27, 1995 **Group Art Unit:** 2616

Title: TEXT AND IMAGE SHARPENING OF JPEG COMPRESSED IMAGES IN THE FREQUENCY DOMAIN

RECEIVED
97 MAR -5 P 2:21
GROUP 260

ASSISTANT COMMISSIONER FOR PATENTS
Washington, D.C. 20231

TRANSMITTAL LETTER FOR RESPONSE/AMENDMENT

Sir:

Transmitted herewith is/are the following in the above-identified application:

(X) Response/Amendment ( ) Petition to extend time to respond
( ) New fee as calculated below ( ) Supplemental Declaration
(X) No additional fee (Address envelope to "Box Non-Fee Amendments")
( ) Other: _____

CLAIMS AS AMENDED BY OTHER THAN A SMALL ENTITY						
(1) FOR	(2) CLAIMS REMAINING AFTER AMENDMENT	(3) NUMBER EXTRA	(4) HIGHEST NUMBER PREVIOUSLY PAID FOR	(5) PRESENT EXTRA	(6) RATE	(7) ADDITIONAL FEES
TOTAL CLAIMS	35	MINUS	36	= 0	X $ 22	$ 0
INDEP. CLAIMS	4	MINUS	4	= 0	X $ 80	$ 0
[ ] FIRST PRESENTATION OF A MULTIPLE DEPENDENT CLAIM					+ $260	$ 0
EXTENSION FEE	1ST MONTH $110.00 [ ]	2ND MONTH $390.00 [ ]	3RD MONTH $930.00 [ ]	4TH MONTH $1470.00 [ ]		$ 0
				TOTAL ADDITIONAL FEE FOR THIS AMENDMENT		$ 0

Charge $ 0 to Deposit Account 08-2025. At any time during the pendency of this application, please charge any fees required or credit any overpayment to Deposit Account 08-2025 pursuant to 37 CFR 1.25. Additionally please charge any fees to Deposit Account 08-2025 under 37 CFR 1.19, 1.20 and 1.21. A duplicate copy of this sheet is enclosed.

Respectfully submitted,

Giordano Beretta et al.

By _____
Pehr Jansson

Attorney/Agent for Applicant(s)
Reg. No. **35,759**

Date: *February 18, 1997*

Telephone No.: **(415) 857-7533**

I hereby certify that this correspondence is being deposited with the United States Postal Service as first class mail in an envelope addressed to: Assistant Commissioner for Patents, Washington, D.C. 20231.

Date of Deposit: *February 18, 1997*

Typed Name: **Linda A. Iimura**

Signature: *Linda A. Iimura*

Rev 10/96 (TransAmd)

- Attach as First Page to Transmitted Papers -

HUAWEI EX. 1016 - 682/714

UNIT' STATES DEPARTMENT OF COMMERCE
Paten and Trademark Office
Address: COMMISSIONER OF PATENTS AND TRADEMARKS
Washington, D.C. 20231

APPLICATION NUMBER	FILING DATE	FIRST NAMED APPLICANT	ATTY. DOCKET NO.
08/411,369	03/27/95	BERETTA	G 10940893

EXAMINER

26M1/0527

RECORDS MANAGER
LEGAL DEPARTMENT 20BO
HEWLETT PACKARD COMPANY
P O BOX 10301
PALO ALTO CA 94303-0890

JOHNSON, B

ART UNIT	PAPER NUMBER
2608	5

DATE MAILED: 05/27/97

This is a communication from the examiner in charge of your application.
COMMISSIONER OF PATENTS AND TRADEMARKS

OFFICE ACTION SUMMARY

☐ Responsive to communication(s) filed on 2/24/97

☑ This action is **FINAL**.

☐ Since this application is in condition for allowance except for formal matters, **prosecution as to the merits is closed** in accordance with the practice under *Ex parte Quayle*, 1935 D.C. 11; 453 O.G. 213.

A shortened statutory period for response to this action is set to expire 3 month(s), or thirty days, whichever is longer, from the mailing date of this communication. Failure to respond within the period for response will cause the application to become abandoned. (35 U.S.C. § 133). Extensions of time may be obtained under the provisions of 37 CFR 1.136(a).

Disposition of Claims

☑ Claim(s) 1-23, 25-36 is/are pending in the application.
Of the above, claim(s) _____ is/are withdrawn from consideration.
☑ Claim(s) 1-13, 16, 19, 33 is/are allowed.
☑ Claim(s) 14-15, 17-18, 20-23, 25-32, 34-36 is/are rejected.
☐ Claim(s) _____ is/are objected to.
☐ Claim(s) _____ are subject to restriction or election requirement.

Application Papers

☐ See the attached Notice of Draftsperson's Patent Drawing Review, PTO-948.
☐ The drawing(s) filed on _____ is/are objected to by the Examiner.
☐ The proposed drawing correction, filed on _____ is ☐ approved ☐ disapproved.
☐ The specification is objected to by the Examiner.
☐ The oath or declaration is objected to by the Examiner.

Priority under 35 U.S.C. § 119

☐ Acknowledgment is made of a claim for foreign priority under 35 U.S.C. § 119(a)-(d).

☐ All ☐ Some* ☐ None of the CERTIFIED copies of the priority documents have been

☐ received.
☐ received in Application No. (Series Code/Serial Number) _____.
☐ received in this national stage application from the International Bureau (PCT Rule 17.2(a)).

*Certified copies not received: _____.

☐ Acknowledgment is made of a claim for domestic priority under 35 U.S.C. § 119(e).

Attachment(s)

☐ Notice of Reference Cited, PTO-892
☐ Information Disclosure Statement(s), PTO-1449, Paper No(s). _____
☐ Interview Summary, PTO-413
☐ Notice of Draftperson's Patent Drawing Review, PTO-948
☐ Notice of Informal Patent Application, PTO-152

--SEE OFFICE ACTION ON THE FOLLOWING PAGES--

HUAWEI EX. 1016 - 683/714

DETAILED ACTION

Claim Rejections - 35 USC § 103

1. The following is a quotation of 35 U.S.C. 103(a) which forms the basis for all obviousness rejections set forth in this Office action:

> (a) A patent may not be obtained though the invention is not identically disclosed or described as set forth in section 102 of this title, if the differences between the subject matter sought to be patented and the prior art are such that the subject matter as a whole would have been obvious at the time the invention was made to a person having ordinary skill in the art to which said subject matter pertains. Patentability shall not be negatived by the manner in which the invention was made.

2. Claims 14, 15, 17, 20-23, 29, and 34-36 are rejected under 35 U.S.C. 103(a) as being unpatentable over Sugiura (5,465,164) in view of Agarwal (5,488,570).

As to claims 14, 15, 17, 29 and 34-36, Sugiura teaches a method of compressing and transmitting images which produces decompressed images having improved text and image quality, the method comprising:

compressing a source image into compressed image data using a first quantization table (Qe) (Quantization Table 105 of fig. 1);

forming a second quantization table (Qd), wherein the second quantization table is related to the first quantization table (Inverse Quantization Table 115 of fig. 1);

transmitting the compressed image data (Interfaces 109 and 111, Communications Circuit 110 of fig. 1);

decompressing the compressed image data using the second quantization table Qd (Inverse Quantization 114 and Inverse Quantization Table 115 of fig. 1).

Sugiura does not explicitly teach whereas Agarwal teaches that a second quantization function (which can be incorporated into a table) is related to a first quantization table scaled in accordance with a predetermined function of the energy in a reference image and the energy in a scanned image in order to enhance the image during the decoding process (col. 1, lines 35-60 where an energy measure value corresponding to the block of the encoded second video frame is the energy value of the reference image; the energy measure threshold value corresponding to the selected quantization level for the block in accordance with the training video frames which are the scanned images; the comparison function is the predetermined function; and the end resultant filter function can be incorporated into a table such as the second quantization table). It would have been obvious to a person of ordinary skill in the art at the time of the invention for Sugiura to decompress using a quantization function which could be incorporated into a table based on a first quantization table scaled in accordance with a predetermined function of the energy in a reference image and the energy in a scanned image as taught by Agarwal in order to enhance the image during decoding.

As to claims 20-23, selecting a target image; rendering the target image into an image file; the target image having elements critical to the quality of the image are inherent in using a reference to control the quality of the compression process. Images which have text including text with a serif font are well known in the art (official notice).

3. Claims 18, 25-28, and 30-32 are rejected under 35 U.S.C. 103(a) as being unpatentable over Sugiura (5,465,164) and Agarwal (5,488,570) as applied above, further in view of Tzou (4,776,030).

As to claims 18, 25-28, and 30-32, Sugiura does not explicitly teach use of the variance in the scaling factor to reduce the quantization error. Tzou teaches that in an adaptive system the quantization of an image is ordered according to the variance of the image coefficients to reduce quantization error (col. 2, lines 21-42). It would have been obvious to a person of ordinary skill in the art at the time of invention to use the image variances as taught by Tzou with the reference and scanned image to arrive at the scaling factor of Sugiura and Agarwal in order to reduce quantization error.

Allowable Subject Matter

4. Claims 1-13, 16, 19, and 33 are allowed. The following is a statement of reasons for the indication of allowable subject matter: the prior art does not teach quantizing image data with a first quantization table, encoding the quantized image, generating prior to transmission a second quantization table related to but nonidentical to the first quantization table, and transmitting the encoded image, encoding table and the second quantization table.

Response to Arguments

5. In the first office action Examiner made a 35 USC §112, second paragraph rejection based on the observation that the JPEG standard was not tied to a citation number nor a date. Applicant has responded to this rejection by citing p. 6, lines 11-13. Examiner understands this response to mean that the JPEG standard being referred to throughout the specification is that found in "Information technology - digital compression encoding of continuous - tones still images - part 1: Requirements and Guidelines," ISO/IEC IS10918-1, October 20, 1992." That being the case, the 35 USC §112, second paragraph rejection made in the first office action is withdrawn.

6. With respect to the 35 USC 103(a) rejections, Applicant argues that the references only have one table and comments on Examiner's acknowledgement that Sugiura does not teach a second quantization table related to the first table. It is Examiner's position that the combined references of Agarwal and Sugiura or Agarwal, Tzou, and Sugiura teach a second quantization table where given the inherent nature of filters found in Agarwal in how they are represented by tables, the filter function related to energy is factored into the second quantization table of Sugiura so that the second quantization table is related to but nonidentical to the first quantization table. Also in the first action Examiner stated that taken alone Sugiura taught that the second table was related to the first table but not through an energy relationship.

Applicant further argues that Agarwal teaches a video image whereas the present application is in the realm of still image compression. It is Examiner's position that the concept of relating compression and decompression functions through energy relationships as applied to

compression of video images can be applied to compression of still images since both procedures are in the realm of image compression. Furthermore, the claims do not require still images.

Conclusion

7. **THIS ACTION IS MADE FINAL.** Applicant is reminded of the extension of time policy as set forth in 37 C.F.R. § 1.136(a).

A SHORTENED STATUTORY PERIOD FOR RESPONSE TO THIS FINAL ACTION IS SET TO EXPIRE THREE MONTHS FROM THE DATE OF THIS ACTION. IN THE EVENT A FIRST RESPONSE IS FILED WITHIN TWO MONTHS OF THE MAILING DATE OF THIS FINAL ACTION AND THE ADVISORY ACTION IS NOT MAILED UNTIL AFTER THE END OF THE THREE-MONTH SHORTENED STATUTORY PERIOD, THEN THE SHORTENED STATUTORY PERIOD WILL EXPIRE ON THE DATE THE ADVISORY ACTION IS MAILED, AND ANY EXTENSION FEE PURSUANT TO 37 C.F.R. § 1.136(a) WILL BE CALCULATED FROM THE MAILING DATE OF THE ADVISORY ACTION. IN NO EVENT WILL THE STATUTORY PERIOD FOR RESPONSE EXPIRE LATER THAN SIX MONTHS FROM THE DATE OF THIS FINAL ACTION.

8. Any inquiry concerning this communication or earlier communications from the examiner should be directed to Brian Johnson whose telephone number is (703) 305-3865. The examiner can normally be reached on Monday-Thursday from 7:30 AM to 5:00 PM. The examiner can also be reached on alternate Fridays.

If attempts to reach the examiner by telephone are unsuccessful, the examiner's supervisor, Dwayne Bost, can be reached on (703) 305-4778.

Any inquiry of a general nature or relating to the status of this application should be directed to the Group receptionist whose telephone number is (703) 305-3900.

BJ

Brian L. Johnson
May 17, 1997

DWAYNE BOST
SUPERVISORY PATENT EXAMINER
GROUP 2600

```
=>d his ful
     (FILE 'USPAT' ENTERED AT 14:37:17 ON 15 MAY 1997)
L1             83 SEA ((TABLE## OR MATRI###) AND (DECOMPRESS### OR DEQUANTIZ
? O
                  R (INVERSE QUANTIZ?)))/AB
L2              4 SEA (((CODE BOOK) OR CODEBOOK) AND (DECOMPRESS### OR DEQUA
NTI
                  Z? OR (INVERSE QUANTIZ?)))/AB
L3              3 SEA L2 NOT L1
L4            784 SEA ((TABLE# OR MATRI### OR CODEBOOK OR (CODE BOOK)) AND D
ECO
                  D?)/AB
L5                QUE 382/CLAS
L6                QUE 348
L7                QUE 348/CLAS
L8                QUE 358/CLAS
L9                QUE L5 OR L7 OR L8
L10           125 SEA L4 AND L9
L11           113 SEA L10 NOT L1
     FILE USPAT
```

(FILE 'USPAT' ENTERED AT 15:24:57 ON 14 MAY 1997)

```
                SET PAGE SCROLL
L1          1379 S 382/254-275/CCLST
L2               QUE (DEQUANTIZ? OR QUANTIZ?)/AB
L3            65 S L1 AND L2
L4               QUE (DEQUANTIZ? OR DECOMPRESS?)/AB
L5             7 S L1 AND L4
L6             3 S L5 NOT L3
L7             1 S 5508942/PN
L8               QUE 382/CLAS
L9               QUE 358/CLAS
L10              QUE 348/CLAS
L11        49029 S L8 OR L9 OR L10
L12           83 S ((TABLE# OR MATRI###) AND (DECOMPRESS### OR DEQUANTIZ? OR (
L13           38 S L12 AND L11
L14           36 S L13 NOT (L3 OR L6)
L15           45 S L12 NOT L13
```

HUAWEI EX. 1016 - 690/714

(FILE 'USPAT' ENTERED AT 14:19:05 ON 14 MAY 1997)

```
                SET PAGE SCROLL
L1              QUE (QUANTIZ OR DEQUANTIZ?)/AB
L2           33 S L1
L3              QUE (CONTRAST OR RESOLUTION OR BRIGHTNESS OR INTENSITY OR ENE
L4            1 S L2 AND L3
L5        64469 S (COMPRESS? OR DECOMPRESS?)/AB
L6         3136 S L3 AND L5
L7          998 S DECOMPRESS?/AB

=> s l7 and l3
          5160 CONTRAST/AB
          7753 RESOLUTION/AB
          3514 BRIGHTNESS/AB
         15650 INTENSITY/AB
         50584 ENERGY/AB
L8          48 L7 AND L3
```

HUAWEI EX. 1016 - 691/714

```
      (FILE 'USPAT' ENTERED AT 16:17:15 ON 28 OCT 96)

L1            0 S 382,348,358/CLAS
L2        41535 S 382 OR 348 OR 358/CLAS
L3          415 S L2 AND COMPRESSION AND QUANTIZATION
                SET PAGE SCROLL
L4        41535 S 382 OR 348 OR 358/CLAS
L5           88 S L4 AND COMPRESSION AND (QUANTIZATION (3A) (MATRI### OR T
ABL
L6            0 S L1 AND COMPRESSION
L7         7863 S L4 AND COMPRESSION
L8          415 S L7 AND QUANTIZATION
L9          323 S L8 AND (MATRI### OR TABLE#)
L10         154 S L7 AND QUANTIZATION (P) (MATRI### OR TABLE#)
L11        7595 S 382/CLAS
L12       32029 S 348/CLAS
L13       11644 S 358/CLAS
L14       47112 S L11 OR L12 OR L13
L15       59791 S 382 OR 358 OR 348/CLAS
L16           1 S L14 AND COMPRESSION AND (QUATIZATION (3A) (MATRI### OR T
ABL
L17         215 S L14 AND COMPRESSION AND (QUANTIZATION (3A) (MATRI### OR
TAB
L18        1104 S L14 AND COMPRESSION AND QUANTIZATION
L19         889 S L18 NOT L17
L20         803 S L19 AND REFERENCE
L21         280 S L20 AND (DCT OR (DISCRETE COSINCE TRANSFORM))
L22          53 S L20 AND JPEG
L23         249 S L21 NOT L22

=>
```

(FILE 'USPAT' ENTERED AT 16:17:15 ON 28 OCT 96)

```
L1            0 S 382,348,358/CLAS
L2        41535 S 382 OR 348 OR 358/CLAS
L3          415 S L2 AND COMPRESSION AND QUANTIZATION
                SET PAGE SCROLL
L4        41535 S 382 OR 348 OR 358/CLAS
L5           88 S L4 AND COMPRESSION AND (QUANTIZATION (3A) (MATRI### OR T
ABL
L6            0 S L1 AND COMPRESSION
L7         7863 S L4 AND COMPRESSION
L8          415 S L7 AND QUANTIZATION
L9          323 S L8 AND (MATRI### OR TABLE#)
L10         154 S L7 AND QUANTIZATION (P) (MATRI### OR TABLE#)
L11        7595 S 382/CLAS
L12       32029 S 348/CLAS
L13       11644 S 358/CLAS
L14       47112 S L11 OR L12 OR L13
L15       59791 S 382 OR 358 OR 348/CLAS
L16           1 S L14 AND COMPRESSION AND (QUATIZATION (3A) (MATRI### OR T
ABL
L17         215 S L14 AND COMPRESSION AND (QUANTIZATION (3A) (MATRI### OR
TAB
L18        1104 S L14 AND COMPRESSION AND QUANTIZATION
L19         889 S L18 NOT L17
L20         803 S L19 AND REFERENCE
L21         280 S L20 AND (DCT OR (DISCRETE COSINCE TRANSFORM))
```

MAIL ROOM
AUG 11 1997
32
PAT. & TRADEMARK OFF.

Initial Review
BOX AF

Pp. 2608
#6/ Arndt B(N.E.)
R. Morgan
8/8/97

RESPONSE UNDER 37 CFR 1.116
EXPEDITED PROCEDURE REQUESTED
EXAMINING GROUP 2608

Attorney's Do. No. 1094893-1

IN THE UNITED STATES PATENT AND TRADEMARK OFFICE

In re patent application of:

Beretta, et al.

U.S. Serial No. 08/411,369

Filed: March 27, 1995

For: TEXT AND IMAGE SHARPENING OF JPEG COMPRESSED IMAGES IN FREQUENCY DOMAIN

Examiner: Johnson, B.

Group Art Unit: 2608

RECEIVED
AUG - 6 '97
GROUP 2600

I HEREBY CERTIFY THAT THIS CORRESPONDENCE IS BEING DEPOSITED WITH THE UNITED STATES POSTAL SERVICE AS FIRST CLASS MAIL IN AN ENVELOPE ADDRESSED TO:

☐ COMMISSIONER OF PATENTS AND TRADEMARKS, WASHINGTON D.C. 20231

☒ ASSISTANT COMMISSIONER FOR PATENTS, WASHINGTON D.C. 20231

☐ ASSISTANT COMMISSIONER FOR TRADEMARKS, 2900 CRYSTAL DRIVE, ARLINGTON, VA 22202-3513

ON: 28 July 1997

Box AF
Assistant Commissioner for Patents
Washington, D.C. 20231

AMENDMENT AFTER FINAL REJECTION UNDER 37 C.F.R. 1.116

Applicants respond to the Office Action, Paper No. 5, dated May 27, 1997, as follows:

In the claims:

Please amend claims 14, 16, 19, 29 and 33 as follows:

14. (First Amended) A method of compressing and transmitting images which produces decompressed images having improved text and image quality, the method comprising:

compressing a source image into compressed image data using a first quantization table (Q_E);

HUAWEI EX. 1016 - 694/714

forming a second quantization table (Q_D), wherein the second quantization table is related to the first quantization table in accordance with a predetermined function of the energy in a reference image and the energy in a scanned image, such that the second quantization table (Q_D) is configured to compensate for image degradation caused by a scanner;

transmitting the compressed image data; and

decompressing the compressed image data using the second quantization table Q_D.

16. (First Amended) A method of compressing and transmitting images which produces decompressed images having improved text and image [quality according to claim 15 wherein the step scaling the first quantization in accordance with the predetermined function is performed] quality, the method comprising:

compressing a source image into compressed image data using a first quantization table (Q_E);

forming a second quantization table (Q_D), wherein the second quantization table is related to the first quantization table in accordance with a predetermined function of the energy in a reference image and the energy in a scanned image;

transmitting the compressed image data; and

decompressing the compressed image data using the second quantization table Q_D;

wherein the step of forming a second quantization table includes scaling

HUAWEI EX. 1016 - 695/714

the first quantization table in accordance with the predetermined function prior to the transmitting step.

19. (First Amended) A method [according to claim 14 further comprising:] of compressing and transmitting images which produces decompressed images having improved text and image quality, the method comprising:

compressing a source image into compressed image data using a first quantization table (Q_E);

forming a second quantization table (Q_D), wherein the second quantization table is related to the first quantization table in accordance with a predetermined function of the energy in a reference image and the energy in a scanned image;

transmitting the compressed image data;

decompressing the compressed image data using the second quantization table Q_D;

encapsulating the second quantization table Q_D with the compressed image data to form an encapsulated data file; and

transmitting the encapsulated data file.

29. (First Amended) A method of improving text and image quality of compressed images that are compressed using the JPEG compression standard, the method comprising:

selecting a reference image;

HUAWEI EX. 1016 - 696/714

determining the energy content of the reference image;

selecting a scanned image;

determining the energy content of the scanned image;

selecting a first quantization table (Q_E);

scaling the first quantization table (Q_E) to form a second quantization table (Q_D) according to the ratio of the energy in the reference image to the energy content of the scanned image, such that the second quantization table (Q_D) is configured to compensate for image degradation caused by a scanner;

compressing a source image in accordance with the JPEG standard using the first quantization table (Q_E); and

decompressing the source image in accordance with the JPEG standard using the second quantization table Q_D whereby the decompressed image has improved image quality.

33. (First Amended) A method of improving text and image quality [according to claim 29 further comprising:] of compressed images that are compressed using the JPEG compression standard, the method comprising:

selecting a reference image;

determining the energy content of the reference image;

selecting a scanned image;

determining the energy content of the scanned image;

selecting a first quantization table (Q_E);

scaling the first quantization table (Q_E) to form a second quantization table (Q_D) according to the ratio of the energy in the reference image to the

HUAWEI EX. 1016 - 697/714

energy content of the scanned image;

compressing a source image in accordance with the JPEG standard using the first quantization table (Q_E);

decompressing the source image in accordance with the JPEG standard using the second quantization table Q_D whereby the decompressed image has improved image quality;

encapsulating the second quantization table (Q_D) with the compressed image to form a JPEG file; and

transmitting the JPEG file over a limited bandwidth channel.

REMARKS

Claims 1-13, 16, 19 and 33 are indicated as allowed. Claims 14, 15, 17, 20-23, 29 and 34-36 are rejected under 35 U.S.C. §103(a) as being unpatentable over Sugiura (5,465,164) in view of Agarwal (5,488,570). Claims 18, 25-28, and 30-32 are rejected under 35 U.S.C. §103(a) as being unpatentable over Sugiura (5,465,164) and Agarwal (5,488,570) as applied above, further in view of Tzou (4,776,030). Reconsideration is requested.

Claims 16, 19 and 33 were indicated as allowed but depended from rejected claims 14 and 29, respectively, and have therefore been rewritten in independent form to include all of the limitations of their base claims. No new matter has been added. Claims 16, 19 and 33, as amended, are now allowable as independent claims.

HUAWEI EX. 1016 - 698/714

Claims 14, 15, 17, 20-23, 29 and 34-36 are patentable under 35 U.S.C. §103(a) over Sugiura (5,465,164) in view of Agarwal (5,488,570).

The Examiner states that Agarwal teaches that a second quantization function (which can be incorporated into a table) is related to a first quantization table, scaled in accordance with a predetermined function of the energy in a reference image and the energy in a scanned image in order to enhance the image during the decoding process (col. 1, lines 35-60 where an energy measure value corresponding to the block of the encoded second video frame is then energy value of the reference image; the energy measure threshold value corresponding to the selected quantization level for the block in accordance with the training video frames which are the scanned images; the comparison function is the predetermined function; and the end resultant filter function can be incorporated into a table such as the second quantization table).

The Examiner concludes that it would have been obvious to a person of ordinary skill in the art at the time of the invention for Sugiura to decompress using a quantization function which could be incorporated into a table based on a first quantization table scaled in accordance with a predetermined function of the energy in a reference image and the energy in a scanned image as taught by Agarwal in order to enhance the image during decoding.

The Examiner takes the position that the combined references of Agarwal and Sugiura teach a second quantization table where, given the inherent nature of filters found in Agarwal in how they are represented by tables, the filter function related to energy is factored into the second quantization table of

HUAWEI EX. 1016 - 699/714

Sugiura so that the second quantization table is related to but nonidentical to the first quantization table.

Applicants respectfully traverse the Examiner's characterization of the quantization tables of Agarwal and Examiner's position that Agarwal and Sugiura teach a second quantization table based upon the inherent nature of the filters found in Agarwal. Though Agarwal is a very long and complex reference, the invention described appears to be directed to exploiting "the perceptual properties of the human visual system in a statistical sense to arrive at quantization tables that minimize perceived quantization artifacts at a given effective bit rate." (Col. 120, ll. 29-35). Agarwal then goes on to describe a process for designing a set of N quantization tables wherein table Q1 is at the perceptual threshold (i.e. it generates no perceptible artifacts but at the expense of a bit rate that is potentially much higher than a target bit rate) and wherein the remaining quantization tables are designed to have monotonically decreasing intermediate bit rates. (Col. 120, l. 43 to col. 121, l. 67). It appears that the quantization tables of Agarwal are directed toward quantization tables which reduce the bit rate required to encode an image with the least perceptible artifacts for typical video. (Col. 121, ll. 49-54).

By contrast, the present invention is directed toward a method of compressing and transmitting images which produces decompressed images having improved text and image quality, which includes forming a second quantization table Q_D which is related to the first quantization table Q_E in accordance with a predetermined function of the energy in a reference image and the energy in a scanned image, as recited in claim 14 (from which claims 15, 17

HUAWEI EX. 1016 - 700/714

and 20-23 depend). Also, in contrast to the references relied upon the invention includes a method of improving text and image quality of compressed images that are compressed using the JPEG compression standard, which method includes scaling the first quantization table (Q_E) to form a second quantization table (Q_D) according to the ratio of the energy in the reference image to the energy content of the scanned image, as recited in claim 29 (from which claims 34-36 depend).

In the present invention, the second quantization table is used to restore the energy level of the compressed image which, like the scanned image, suffers from the inherent limitations of a scanner, to the energy level of a reference image that does not suffer from the inherent limitations of the color scanner because it is not compromised by the misregistration and MTF limitations of the scanner. (Spec. p. 15, l. 19 to p. 16, l. 13). Agarwal thus does not appear to teach the second quantization table of the present invention nor does the function of the second table appear to be inherent in the nature of the filters of Agarwal.

Claims 14 and 29 have been amended to more particularly point out and distinctly claim the features of the present invention. Claim 14, from which claims 15-17 and 20-24 depend, is amended to recite "forming a second quantization table (Q_D), wherein the second quantization table is related to the first quantization table in accordance with a predetermined function of the energy in a reference image and the energy in a scanned image, <u>such that the second quantization table (Q_D) is configured to compensate for image degradation caused by a scanner</u>". Claim 29, from which claims 34-36 depend, is amended to recite "scaling the first quantization table (Q_E) to form a second

HUAWEI EX. 1016 - 701/714

quantization table (Q_D) according to the ratio of the energy in the reference image to the energy content of the scanned image, such that the second quantization table (Q_D) is configured to compensate for image degradation caused by a scanner". The amendments to claims 14 and 29 are supported by the specification as originally filed at p. 13, ll. 2-14, p. 14, ll. 16-19, and p. 15, l. 19 to p. 16, l. 13. No new matter has been added.

In light of the amendments and remarks above, Applicants submit that nothing in Sugiura and Agarwal, alone or in combination, teaches or suggests the second quantization table Q_D of the present invention, as recited in independent claim 14, from which claims 15-17 and 20-24 depend; and in independent claim 29, from which claims 34-36 depend. Accordingly, these claims are patentable over the cited references.

In addition, in regard to claim 17, the Examiner has overlooked the significance of the features of the invention as claimed. Performing the step of scaling the first quantization in accordance with the predetermined function subsequent to the transmission step, as recited in claim 17, permits the present method to be utilized to improve the image quality of an image transmitted from a conventional device to be decompressed using the second quantization table. (Spec. p. 17, l. 14, to p. 18, l. 4). This feature of the present invention as recited in claim 17 provides claim 17 with separate grounds for patentability in addition to those discussed above.

HUAWEI EX. 1016 - 702/714

Claims 18, 25-28, and 30-32 are patentable under 35 U.S.C. §103(a) over Sugiura (5,465,164) and Agarwal (5,488,570) as applied above, further in view of Tzou (4,776,030).

The Examiner states that Tzou teaches that in an adaptive system the quantization of an image is ordered according to the variance of the image coefficients to reduce quantization error (col. 2, lines 21-42). The Examiner concludes that it would have been obvious to a person of ordinary skill in the art at the time of the invention to use the image variances as taught by Tzou with the reference and scanned image to arrive at the scaling factor of Sugiura and Agarwal in order to reduce quantization error. The Examiner takes the position that the combined references of Agarwal, Tzou and Sugiura teach a second quantization table where given the inherent nature of filters found in Agarwal in how they are represented by tables, the filter function related to energy is factored into the second quantization table of Sugiura so that the second quantization table is related to but nonidentical to the first quantization table.

Applicants respectfully traverse. As discussed above with respect to amended claim 14, from which claim 18 depends, and amended claim 29, from which claims 30-32 depend, and which applies with equal force to claim 25, from which claims 26-28 depend, Agarwal does not appear to teach the second quantization table of the present invention.

Further, Tzou appears to be directed to an adaptive system in which quantization bits are allocated to various discrete coefficients according to the variance of each coefficient and assigned in order to obtain the largest reduction

HUAWEI EX. 1016 - 703/714

in quantization error. (Col. 2, ll. 21-55). There does not appear to be any teaching in Tzou with respect to the use of the second quantization table of the present invention that is related to a first quantization table based upon the energy level of a reference image, which does not suffer from the inherent limitations of a color scanner, versus the energy level of a scanned image, that is affected by the limitations of the color scanner, which enables the energy level of scanned images to be restored to that of the reference image in order to improve the quality of the scanned images.

Applicants therefore respectfully submit that nothing in Sugiura, Agarwal and Tzou, alone or in combination, teaches or suggests the quantization table Q_D or the scaling matrix S of the present invention.

In view of the foregoing remarks, Applicants respectfully submit that the application is now in condition for allowance and action to that end is requested.

Please address all future communications to:

Records Manager
Legal Department, 20BO
Hewlett-Packard Company
P.O. Box 10301
Palo Alto, California 94303-0890

Direct all telephone calls to: Marc P. Schuyler (415) 857-3359.

Respectfully submitted,

GIORDANO BERETTA,
VASUDEV BHASKARAN and
KONSTANTINOS KONSTANTINIDES

By _____
Alexander C. Johnson, Jr.
Registration No. 29,396
Attorney for Applicant

MARGER, JOHNSON,
McCOLLOM & STOLOWITZ, P.C.
1030 S.W. Morrison Street
Portland, Oregon 97205
Telephone: (503) 222-3613

HUAWEI EX. 1016 - 704/714

RESPONSE UNDER 37 CFR 1.116
EXPEDITED PROCEDURE REQUESTED
EXAMINING GROUP 2608

HEWLETT-PACKARD COMPANY
Legal Department, 20BN
P. O. Box 10301
Palo Alto, California 94303-0890

PATENT APPLICATION

ATTORNEY DOCKET NO. 1094893-1

MAIL ROOM
AUG 11 1997
TRADEMARK OFF.

RECEIVED
AUG - 6 97
GROUP 2600

IN THE
UNITED STATES PATENT AND TRADEMARK OFFICE

Inventor(s): GIORDANO BERETTA, VASUDEV BHASKARAN and KONSTANTINOS KONSTANTINIDES

Serial No.: 08/411,369 **Examiner:** B. Johnson

Filing Date: March 27, 1995 **Group Art Unit:** 2608

Title: TEXT AND IMAGE SHARPENING OF JPEG COMPRESSED IMAGES IN FREQUENCY DOMAIN

BOX AF
ASSISTANT COMMISSIONER FOR PATENTS
Washington, D.C. 20231

TRANSMITTAL LETTER FOR RESPONSE/AMENDMENT

Sir:

Transmitted herewith is/are the following in the above-identified application:

(X) Response/Amendment ( ) Petition to extend time to respond
(X) New fee as calculated below ( ) Supplemental Declaration
( ) No additional fee (Address envelope to "Box Non-Fee Amendments")
( ) Other: _____

CLAIMS AS AMENDED BY OTHER THAN A SMALL ENTITY						
(1) FOR	(2) CLAIMS REMAINING AFTER AMENDMENT	(3) NUMBER EXTRA	(4) HIGHEST NUMBER PREVIOUSLY PAID FOR	(5) PRESENT EXTRA	(6) RATE	(7) ADDITIONAL FEES
TOTAL CLAIMS	35	MINUS	36	= 0	X 22	$ 0
INDEP. CLAIMS	7	MINUS	4	= 3	X 80	$ 240
[ ] FIRST PRESENTATION OF A MULTIPLE DEPENDENT CLAIM					+260	$ --
EXTENSION FEE	1ST MONTH $110.00 [ ]	2ND MONTH $390.00 [ ]	3RD MONTH $930.00 [ ]	4TH MONTH $1470.00 [ ]		$ --
					TOTAL ADDITIONAL FEE FOR THIS AMENDMENT	$ 240

Charge $ 240 to Deposit Account 08-2025. At any time during the pendency of this application, please charge any fees required or credit any overpayment to Deposit Account 08-2025 pursuant to 37 CFR 1.25. Additionally please charge any fees to Deposit Account 08-2025 under 37 CFR 1.19, 1.20 and 1.21. A duplicate copy of this sheet is enclosed.

08/05/1997 TSTOKES 00000020 DA#:082025 08411369
01 FC:102 240.00 CH

I hereby certify that this correspondence is being deposited with the United States Postal Service as first class mail in an envelope addressed to: Assistant Commissioner for Patents, Washington, D.C. 20231.

Date of Deposit: July 28, 1997

Typed Name: Alexander C. Johnson, Jr.

Signature: _____

Respectfully submitted,
GIORDANO BERETTA, VASUDEV BHASKARAN and KONSTANTINOS KONSTANTINIDES

By _____
Alexander C. Johnson, Jr.
Registration No. 29,396
Attorney/Agent for Applicant(s)
Reg. No. 29,396

Date: July 28, 1997

Telephone No.: (503) 222-3613

HUAWEI EX. 1016 - 705/714

RESPONSE UNDER 37 CFR 1.116
EXPEDITED PROCEDURE REQUESTED
EXAMINING GROUP 2608

HEWLETT-PACKARD COMPANY
Legal Department, 20BN
P. O. Box 10301
Palo Alto, California 94303-0890

PATENT APPLICATION

ATTORNEY DOCKET NO. 1094893-1

MAIL ROOM
32 AUG 1 1997
PAT. & TRADEMARK OFF.

IN THE
UNITED STATES PATENT AND TRADEMARK OFFICE

RECEIVED
AUG -6 97
GROUP 2600

Inventor(s): GIORDANO BERETTA,
VASUDEV BHASKARAN and KONSTANTINOS KONSTANTINIDES

Serial No.: 08/411,369 **Examiner:** B. Johnson

Filing Date: March 27, 1995 **Group Art Unit:** 2608

Title: TEXT AND IMAGE SHARPENING OF JPEG COMPRESSED IMAGES IN FREQUENCY DOMAIN

BOX AF
ASSISTANT COMMISSIONER FOR PATENTS
Washington, D.C. 20231

TRANSMITTAL LETTER FOR RESPONSE/AMENDMENT

Sir:

Transmitted herewith is/are the following in the above-identified application:

(X) Response/Amendment ( ) Petition to extend time to respond
(X) New fee as calculated below ( ) Supplemental Declaration
( ) No additional fee (Address envelope to "Box Non-Fee Amendments")
( ) Other: _____

CLAIMS AS AMENDED BY OTHER THAN A SMALL ENTITY						
(1) FOR	(2) CLAIMS REMAINING AFTER AMENDMENT	(3) NUMBER EXTRA	(4) HIGHEST NUMBER PREVIOUSLY PAID FOR	(5) PRESENT EXTRA	(6) RATE	(7) ADDITIONAL FEES
TOTAL CLAIMS	35	MINUS	36	= 0	X 22	$ 0
INDEP. CLAIMS	7	MINUS	4	= 3	X 80	$ 240
[ ] FIRST PRESENTATION OF A MULTIPLE DEPENDENT CLAIM					+ 260	$ --
EXTENSION FEE	1ST MONTH $110.00 [ ]	2ND MONTH $390.00 [ ]	3RD MONTH $930.00 [ ]	4TH MONTH $1470.00 [ ]		$ --
					TOTAL ADDITIONAL FEE FOR THIS AMENDMENT	$ 240

Charge $ 240 to Deposit Account 08-2025. At any time during the pendency of this application, please charge any fees required or credit any overpayment to Deposit Account 08-2025 pursuant to 37 CFR 1.25. Additionally please charge any fees to Deposit Account 08-2025 under 37 CFR 1.19, 1.20 and 1.21. A duplicate copy of this sheet is enclosed.

I hereby certify that this correspondence is being deposited with the United States Postal Service as first class mail in an envelope addressed to: Assistant Commissioner for Patents, Washington, D.C. 20231.

Date of Deposit: July 28, 1997

Typed Name: Alexander C. Johnson, Jr.

Signature: _____

Respectfully submitted,
GIORDANO BERETTA, VASUDEV BHASKARAN and KONSTANTINOS KONSTANTINIDES

By _____
Alexander C. Johnson, Jr.
Registration No. 29,396
Attorney/Agent for Applicant(s)
Reg. No. 29,396

Date: July 28, 1997

Telephone No.: (503) 222-3613

HUAWEI EX. 1016 - 706/714

UNITED STATES DEPARTMENT OF COMMERCE
Patent and Trademark Office
Address: COMMISSIONER OF PATENTS AND TRADEMARKS
Washington, D.C. 20231

SERIAL NUMBER	FILING DATE	FIRST NAMED APPLICANT	ATTORNEY DOCKET NO.
08/411,369	03/27/95	BERETTA	10940855

26M1/0904

RECORDS MANAGER
LEGAL DEPARTMENT 20BO
HEWLETT PACKARD COMPANY
P O BOX 10301
PALO ALTO CA 94303-0890

EXAMINER	
JOHNSON, B	
ART UNIT	PAPER NUMBER
2608	7

DATE MAILED: 09/04/97

Below is a communication from the EXAMINER in charge of this application

COMMISSIONER OF PATENTS AND TRADEMARKS

ADVISORY ACTION

☒ THE PERIOD FOR RESPONSE:

a) ☒ is extended to run _____ or continues to run 3 months from the date of the final rejection

b) ☐ expires three months from the date of the final rejection or as of the mailing date of this Advisory Action, whichever is later. In no event however, will the statutory period for the response expire later than six months from the date of the final rejection.

Any extension of time must be obtained by filing a petition under 37 CFR 1.136(a), the proposed response and the appropriate fee. The date on which the response, the petition , and the fee have been filed is the date of the response and also the date for the purposes of determining the period of extension and the corresponding amount of the fee. Any extension fee pursuant to 37 CFR 1.17 will be calculated from the date of the originally set shortened statutory period for response or as set forth in b) above.

☐ Appellant's Brief is due in accordance with 37 CFR 1.192(a).

☒ Applicant's response to the final rejection, filed 7/28/97 has been considered with the following effect, but it is not deemed to place the application in condition for allowance:

1. ☐ The proposed amendments to the claim and /or specification will not be entered and the final rejection stands because:

   a. ☐ There is no convincing showing under 37 CFR 1.116(b) why the proposed amendment is necessary and was not earlier presented.

   b. ☐ They raise new issues that would require further consideration and/or search. (See Note).

   c. ☐ They raise the issue of new matter. (See Note).

   d. ☐ They are not deemed to place the application in better form for appeal by materially reducing or simplifying the issues for appeal.

   e. ☐ They present additional claims without cancelling a corresponding number of finally rejected claims.

   NOTE: _____

2. ☒ Newly proposed or amended claims 14, 16, 19, 29 & 33 would be allowed if submitted in a separately filed amendment cancelling the non-allowable claims. 25-28

3. ☒ Upon the filing an appeal, the proposed amendment ☒ will be entered ☐ will not be entered and the status of the claims will be as follows:

   Claims allowed: 1-23, 29-36
   Claims objected to: _____
   Claims rejected: 25-28

   However;

   ☐ Applicant's response has overcome the following rejection(s): _____

4. ☒ The affidavit, exhibit or request for reconsideration has been considered but does not overcome the rejection because Regarding claims 25-28, examiner believes the subject matter of the applied references pertains to the present applications and a second quantization is taught.

5. ☐ The affidavit or exhibit will not be considered because applicant has not shown good and sufficent reasons why it was not earlier presented.

☐ The proposed drawing correction ☐ has ☐ has not been approved by the examiner.

☐ Other

DWAYNE BOST
SUPERVISORY PATENT EXAMINER
GROUP 2600

PTOL-303 (REV. 5-89)

HUAWEI EX. 1016 - 707/714

HEWLETT-PACKARD COMPANY
Legal Department, 20BN
P. O. Box 10301
Palo Alto, California 94303-0890

PATENT APPLICATION

ATTORNEY DOCKET NO. 1094893-1

74277 U.S. PTO
08/940695
09/30/97

#9

IN THE
UNITED STATES PATENT AND TRADEMARK OFFICE

Inventor(s): Giordano Beretta, et al

Serial No.: 08/411,369 **Examiner:** B. Johnson

Filing Date: 03/27/95 **Group Art Unit:** 2608

Title: TEXT AND IMAGE SHARPENING OF JPEG COMPRESSED IMAGES IN THE FREQUENCY DOMAIN

RECEIVED
OCT 22 1997
GROUP 2600

ASSISTANT COMMISSIONER FOR PATENTS
Washington, D.C. 20231

PETITION FOR EXTENSION OF TIME

Sir:

In an Office Action mailed on **May 27, 1997**, on the above-identified U.S. Patent application, a shortened statutory period of **3** months was set for response. In accordance with 37 C.F.R. 1.136(a), applicant(s) hereby request(s) a:

( ) one month
(X) two months
( ) three months
( ) four months

time extension so that the period for response to the Office Action expires on **10/27/97**.

10/20/1997 JARTIS 00000048 DAN:082025 08411369
01 FC:116 390.00 CH

Charge $ **390** to Deposit Account 08-2025. At any time during the pendency of this application, please charge any fees required or credit any overpayment to Deposit Account 08-2025 pursuant to 37 CFR 1.25. Additionally please charge any fees to Deposit Account 08-2025 under 37 CFR 1.19, 1.20 and 1.21. A duplicate copy of this sheet is enclosed.

I hereby certify that this correspondence is being deposited with the United States Postal Service as :

( ) First Class Mail

(X) "Express Mail Post Office to Addressee" service under 37 CFR 1.10.

"Express Mail" label no. **EM198802783US**

in an envelope addressed to: Assistant Commissioner for Patents, Washington, D.C. 20231.

Date of Deposit: September 30, 1997

Typed Name: **Nelia de Guzman**

Signature: Nelia de Guzman

COPY

Respectfully submitted,

Giordano Beretta, et al

By _____

Marc P. Schuyler

Attorney/Agent for Applicant(s)
Reg. No. **35,675**

Date: September 30, 1997

Telephone No.: **650/857-3359**

Rev 10/96 (Ext Time)

UNITED STATES DEPARTMENT OF COMMERCE
Patent and Trademark Office
Address: COMMISSIONER OF PATENTS AND TRADEMARKS
Washington, D.C. 20231

APPLICATION NUMBER	FILING DATE	FIRST NAMED APPLICANT	ATTORNEY DOCKET NO.
08/411,369	03/27/95	BERETTA	G 10940893

020575
MARGER JOHNSON MCCOLLOM STOLOWITZ
1030 SW MORRISON ST
PORTLAND OR 97205

LM61/0116

JOHNSON, B
EXAMINER

ART UNIT	PAPER NUMBER
2744	10

DATE MAILED: 01/16/98

NOTICE OF ABANDONMENT

This application is abandoned in view of:

☐ Applicant's failure to timely file a proper response to the Office letter mailed on _____.

☐ A response (with a Certificate of Mailing or Transmission of _____) was received on _____, which is after the expiration of the period for response (including a total extension of time of ____ month(s)) which expired on _____.

☐ A proposed response was received on _____, but it does not constitute a proper response to the final rejection.

(A proper response to a final rejection consists only of: a timely filed amendment which places the application in condition for allowance; a Notice of Appeal; or the filing of a continuing application under 37 CFR 1.62 (FWC).

☐ No response has been received.

☐ Applicant's failure to timely pay the required issue fee within the statutory period of three months from the mailing date of the Notice of Allowance.

☐ The issue fee (with a Certificate of Mailing or Transmission of _____) was received on _____.

☐ The submitted issue fee of $_____ is insufficient. The issue fee required by 37 CFR 1.18 is $_____.

☐ The issue fee has not been received.

☐ Applicant's failure to timely file new formal drawings as required in the Notice of Allowability.

☐ Proposed new formal drawings (with a Certificate of Mailing or Transmission of _____) were received on _____.

☐ The proposed new formal drawings filed _____ are not acceptable.

☐ No proposed new formal drawings have been received.

☑ The express abandonment under 37 CFR 1.62(g) in favor of the FWC application filed on 9/30/97.

☐ The letter of express abandonment which is signed by the attorney or agent of record, the assignee of the entire interest, or all of the applicants.

☐ The letter of express abandonment which is signed by an attorney or agent (acting in a representative capacity under 37 CFR 1.34(a) upon the filing of a continuing application.

☐ The decision by the Board of Patent Appeals and Interferences rendered on _____ and because the period for seeking court review of the decision has expired and there are no allowed claims.

☐ The reason(s) below:

DWAYNE D. BOST
SUPERVISORY PATENT EXAMINER
GROUP 2700

FORM PTO-1432 (REV. 10-95)

HUAWEI EX. 1016 - 709/714

08/411369

PATENT APPLICATION

08411369

APPROVED FOR LICENSE

INITIALS APR 149581

CONTENTS

ABANDONED

Date Entered or Counted			Date Received or Mailed
	1.	Application ✓ papers.	
7/26/95	2.	Prin Pat Watch	June 26 1995
11/12	3.	Rec 3 mos	11/18.96
	4.	Quest (a)	2/24/97
5-22	5.	Final Rec 3 mos	5-27-97
	6.	Amdt B (N.E)	8/1/97
9-2	7.	Advisor Action	9-4-97
	8.	Ext of Time (2)	9/30/97
	9.	Ext of Time 3	9-30-97
1-15	10.	Notice of Abandonment	1-16-98
	11.		
	12.		
	13.		
	14.		
	15.		
	16.		
	17.		
	18.		
	19.		
	20.		
	21.		
	22.		
	23.		
	24.		
	25.		
	26.		
	27.		
	28.		
	29.		
	30.		
	31.		
	32.		

(FRONT)

Staple Issue Slip Here

POSITION		ID NO.	DATE
CLASSIFIER		86	7/15/95
EXAMINER		482	4/20
TYPIST		432	42095
VERIFIER			
CORPS CORR.			
SPEC. HAND			
FILE MAINT.			
DRAFTING			

INDEX OF CLAIMS

Claim Final	Claim Original	Date 11/5/96	Date 5/17/96						
	1	/	=						
	2	/	=						
	3	/	=						
	4	/	=						
	5	/	=						
	6	/	=						
	7	/	=						
	8	/	=						
	9	/	=						
	10	/	=						
	11	/	=						
	12	/	=						
	13	/	=						
	14	/	/						
	15	/	/						
	16	/	=						
	17	/	/						
	18	/	/						
	19	/	=						
	20	/	/						
	21	/	/						
	22	/	/						
	23	/	/						
	24	/							
	25	/	/						
	26	/	/						
	27	/	/						
	28	/	/						
	29	/	/						
	30	/	/						
	31	/	/						
	32	/	/						
	33	/	=						
	34	/	/						
	35	/	/						
	36	/	/						
	37								
	38								
	39								
	40								
	41								
	42								
	43								
	44								
	45								
	46								
	47								
	48								
	49								
	50								

SYMBOLS

✓	Rejected
=	Allowed
- (Through numberal)	Canceled
+	Restricted
N	Non-elected
I	Interference
A	Appeal
O	Objected

Claim Final	Claim Original	Date						
	51							
	52							
	53							
	54							
	55							
	56							
	57							
	58							
	59							
	60							
	61							
	62							
	63							
	64							
	65							
	66							
	67							
	68							
	69							
	70							
	71							
	72							
	73							
	74							
	75							
	76							
	77							
	78							
	79							
	80							
	81							
	82							
	83							
	84							
	85							
	86							
	87							
	88							
	89							
	90							
	91							
	92							
	93							
	94							
	95							
	96							
	97							
	98							
	99							
	100							

(LEFT INSIDE)

HUAWEI EX. 1016 - 711/714

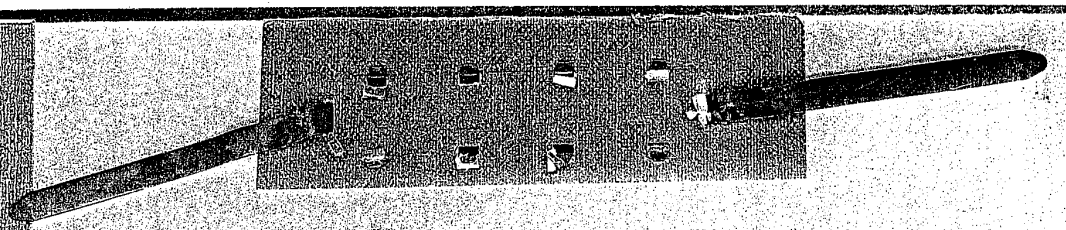

PTO UTILITY GRANT
Paper Number 18

The United States of America

The Commissioner of Patents and Trademarks

Has received an application for a patent for a new and useful invention. The title and description of the invention are enclosed. The requirements of law have been complied with, and it has been determined that a patent on the invention shall be granted under the law.

Therefore, this

United States Patent

Grants to the person(s) having title to this patent the right to exclude others from making, using, offering for sale, or selling the invention throughout the United States of America or importing the invention into the United States of America for the term set forth below, subject to the payment of maintenance fees as provided by law.

If this application was filed prior to June 8, 1995, the term of this patent is the longer of seventeen years from the date of grant of this patent or twenty years from the earliest effective U.S. filing date of the application, subject to any statutory extension.

If this application was filed on or after June 8, 1995, the term of this patent is twenty years from the U.S. filing date, subject to an statutory extension. If the application contains a specific reference to an earlier filed application or applications under 35 U.S.C. 120, 121 or 365(c), the term of the patent is twenty years from the date on which the earliest application was filed, subject to any statutory extension.

Bruce Lehman
Commissioner of Patents and Trademarks

Melvinia Darcy
Attest

PATENT AND TRADEMARK OFFICE ★ UNITED STATES OF AMERICA ★

Form PTO-1584 (Rev. 2/97)

(RIGHT INSIDE)

HUAWEI EX. 1016 - 712/714

[redacted]

SEARCHED

Class	Sub.	Date	Exmr.
382	248, 250 251, 252 232, 236	11/4/96	BJ
358	427, 433 432, 430 448, 458	11/4/96	BJ
348	405, 403 404, 384 393, 394 395	11/4/96	BJ
382	298, 250 251, 252 232, 236	5/12/97	BJ
358	427, 433 432, 430 448, 458	5/12/97	BJ
348	405, 403 404, 384 393, 394 395,	5/12/97	BJ
382	280, 274 233, 238 244, 166 253, 270	5/14/97	BJ
358	426, 261.3 261.1, 261.2	5/14/97	BJ
348	432, 430 433, 409 391, 390	5/14/97	BJ
348	422	5/15/97	BJ
Update	search	8/21/97	BJ

INTERFERENCE SEARCHED

Class	Sub.	Date	Exmr.

SEARCH NOTES

	Date	Exmr.
IEEE Compression & quantization & (matrix or table)	11/4/96	BJ
APS (attached)	10/29/96	BJ
APS	5/14/97	
Frank Snow 348	5/15/97	BJ
Howard Britton 348		
Amelia Au 348		
Kim Yen Vu 358		
Chris Kelly 382		
Tse 375		
APS	5/15/97	BJ

(RIGHT OUTSIDE)

HUAWEI EX. 1016 - 713/714

08/411369

Class	Subclass	ISSUE CLASSIFICATION

[redacted]

UTILITY SERIAL NUMBER 08/411369	PATENT DATE	PATENT NUMBER

SERIAL NUMBER	FILING DATE	CLASS	SUBCLASS	GROUP ART UNIT	EXAMINER
08/411,369	03/27/95	382	254	2613 2606	S. Sherali

APPLICANTS

GIORDANO BERETTA, PALO ALTO, CA; VASUDEV BHASKARAN, MOUNTAIN VIEW, CA; KONSTANTINOS KONSTANTINIDES, SAN JOSE, CA.

CONTINUING DATA********
VERIFIED
BY

FOREIGN/PCT APPLICATIONS********
VERIFIED
BY

FOREIGN FILING LICENSE GRANTED 04/26/95

Foreign priority claimed 35 USC 119 conditions met Verified and Acknowledged	Examiner's initials	AS FILED	STATE OR COUNTRY	SHEETS DRWGS.	TOTAL CLAIMS	INDEP. CLAIMS	FILING FEE RECEIVED	ATTORNEY'S DOCKET NO.
☐ yes ☑ no ☐ yes ☐ no	BY	→	CA	7	36	4	$1,158.00	10940893

ADDRESS

RECORDS MANAGER
LEGAL DEPARTMENT 20BO
HEWLETT PACKARD COMPANY
P O BOX 10301
PALO ALTO CA 94303-0890

TITLE

TEXT AND IMAGE SHARPENING OF JPEG COMPRESSED IMAGES IN THE FREQUENCY DOMAIN

U.S. DEPT. OF COMM./ PAT. & TM—PTO-436L (Rev.12-94)

PARTS OF APPLICATION FILED SEPARATELY

Applications Examiner

NOTICE OF ALLOWANCE MAILED

Assistant Examiner

CLAIMS ALLOWED

Total Claims	Print Claim

ISSUE FEE

Amount Due	Date Paid

DRAWING

Sheets Drwg.	Figs. Drwg.	Print Fig.

Label Area

Primary Examiner

ISSUE BATCH NUMBER

PREPARED FOR ISSUE

WARNING: The information disclosed herein may be restricted. Unauthorized disclosure may be prohibited by the United States Code Title 35, Sections 122, 181 and 368. Possession outside the U.S. Patent & Trademark Office is restricted to authorized employees and contractors only.

Form PTO-436A
(Rev. 8/92)

(FACE)

HUAWEI EX. 1016 - 714/714