US006473653B1

(12) **United States Patent**
Schallhorn et al.

(10) **Patent No.: US 6,473,653 B1**
(45) **Date of Patent: Oct. 29, 2002**

(54) **SELECTIVE ACTIVATION OF ELECTRODES WITHIN AN INPLANTABLE LEAD**

(75) Inventors: **Rick S. Schallhorn**, Lake Elmo; **Gary W. King**, Fridley; **Gregory A. Hrdlicka**, Plymouth, all of MN (US)

(73) Assignee: **Medtronic, Inc.**, Minneapolis, MN (US)

(*) Notice: Subject to any disclaimer, the term of this patent is extended or adjusted under 35 U.S.C. 154(b) by 0 days.

(21) Appl. No.: **09/517,422**

(22) Filed: **Mar. 2, 2000**

Related U.S. Application Data

(63) Continuation-in-part of application No. 09/024,162, filed on Feb. 17, 1998, now Pat. No. 6,038,480, which is a continuation-in-part of application No. 08/627,576, filed on Apr. 4, 1996, now abandoned.

(51) **Int. Cl.**[7] **A61N 1/05**

(52) **U.S. Cl.** **607/116**; 607/117; 600/393

(58) **Field of Search** 607/116, 117, 607/119, 122, 123, 129, 148; 600/373, 374, 377, 378, 393

(56) **References Cited**

U.S. PATENT DOCUMENTS

3,920,024	A	11/1975	Bowers	
3,957,036	A	5/1976	Normann	
4,524,774	A	6/1985	Hildebrandt	
4,543,955	A	10/1985	Schroeppel	
4,570,640	A	2/1986	Barsa	
4,628,934	A	* 12/1986	Pohndorf et al.	607/27
4,702,254	A	10/1987	Zabara	
4,750,499	A	6/1988	Hoffer	
4,867,164	A	9/1989	Zabara	
4,877,032	A	10/1989	Heinze et al.	
4,964,411	A	10/1990	Johnson et al.	

(List continued on next page.)

FOREIGN PATENT DOCUMENTS

EP	0236513	9/1987
WO	9519804	7/1995

OTHER PUBLICATIONS

Agnew et al., "Effects of Prolonged Electrical Stimulation of the Central Nervous System", Chapter 9, pp. 227–252.
Heinrich Bantli, Ph.D., et al., "Supraspinal Interactions Resulting from Experimental Dorsal Column Stimulation", Journal of Neurosurgery, vol. 42, pp. 296–300 (1975).
Jay D. Law, Spinal Stimulations: "Statistical Superiority of Monophasic Stimulation Nowly Separated, Longitudinal Bipoles Having Rostral Cthodes", Proc. of Amer. Soc. Sterotatctic and Functional Neurosurgery. Appl. Neurphysiol 46, pp. 129–137 (1983).
Holsheimer et al., "Contract Combinations in Epidural Spinal Cord Stimulation", Stereotact Functional Neurosurgery, 56, pp. 220–233 (1991).
Holsheimer et al., "How Do Geometric Factors Influence Epidural Spinal Cord Stimulation", Stereotact Functional Neurosurgery, 56, pp. 234–249 (1991).
North et al., "Spinal Cord Stimulation for Chronic Intractable Pain: Superiority of Multi–Channel Devices", Pain, 44 pp. 119–130 (1991).
Barolat et al., "Multifactorial Analysis of Epidural Spinal Cord Stimulation", Stereotact Funct Neurosurgery, 56, pp. 77–103 (1991).

(List continued on next page.)

Primary Examiner—Kennedy Schaetzle
(74) *Attorney, Agent, or Firm*—Banner & Witcoff, Ltd.

(57) **ABSTRACT**

Percutaneously implantable multi-electrode lead adapted to interact with electrically excitable tissue. Electrodes are selected by a signal generator having a main controller that identifies via unique key values electrodes to be activated to stimulate electrically excitable tissue. Electrodes and their associated controllers are coupled such that relatively few wires are used to couple each electrode to the main controller.

15 Claims, 10 Drawing Sheets

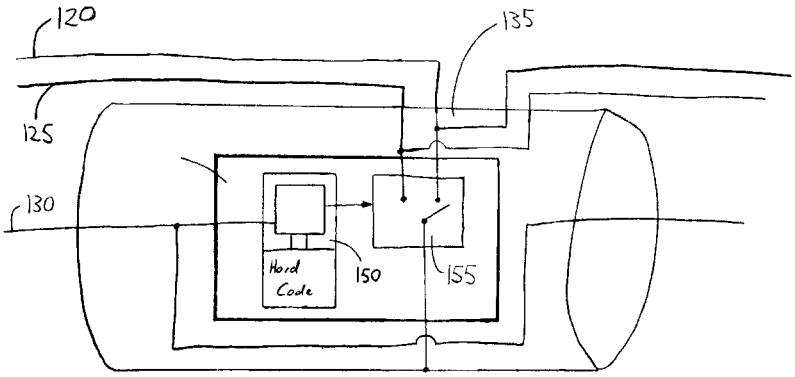

U.S. PATENT DOCUMENTS

5,018,523	A		5/1991	Bach, Jr. et al.	
5,025,807	A		6/1991	Zabara	
5,081,990	A		1/1992	Deletis	
5,167,229	A		12/1992	Peckham et al.	
5,314,458	A		5/1994	Najafi et al.	
5,314,495	A		5/1994	Kovacs	
5,325,870	A		7/1994	Kroll et al.	
5,405,375	A	*	4/1995	Ayers et al.	600/393
5,411,547	A		5/1995	Causey, III	
5,417,719	A		5/1995	Hull et al.	
5,423,873	A		6/1995	Neubauer et al.	
5,531,774	A		7/1996	Schulman et al.	
5,593,430	A		1/1997	Ranger	
5,824,029	A	*	10/1998	Weijand et al.	600/547
5,999,848	A	*	12/1999	Gord et al.	607/2
6,163,723	A	*	12/2000	Roberts et al.	607/18

OTHER PUBLICATIONS

Barolat et al., "Mapping of Sensory Responses to Epidural Stimulation of the Intraspinal Neural Structures in Man", Journal of Neurosurgery, 78, pp. 233–239 (1993).

Struijk et al., "Paraesthesia Thresholds in Spinal Cord Stimulation: A Comparison of Theoretical Results with Clinical Dates", IEEE Transactions on Rehabilitation Engineering, vol. 1, No. 3 (1993).

Center for Integrated Sensors and Circuits, "Thin–Film Intracortical Recording Microelectrodes", Neural Proshese Program, Quarterly Report No. 7 (Apr.–Jun. 1995).

Struijk and Holsheimer, Transverse Tripolar Spinal Cord Stimulation : Theoretical Performance of Dual Channel System, Medical & Biological Engineering & Computing, pp. 273–279 (1996).

Center for Integrated Sensors and Circuits, Thin–Film Intracortical Recording Microelectrodes, Neural Proshese Program, Quarterly Report No. 11 (Apr.–Jun. 1996).

Center for Integrated Sensors and Circuits, "Micromachined Stimulating Electrodes", Neural Proshese Program, Quarterly Report No. 4 (Jul.–Sep. 1996).

* cited by examiner

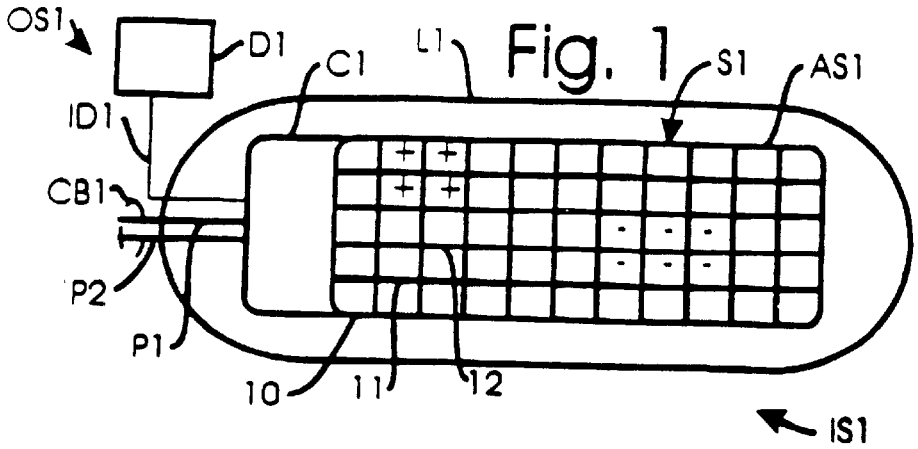

Fig. 1

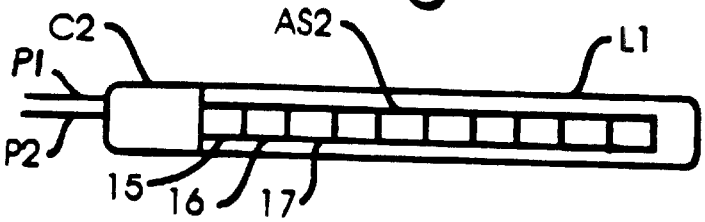

Fig. 2

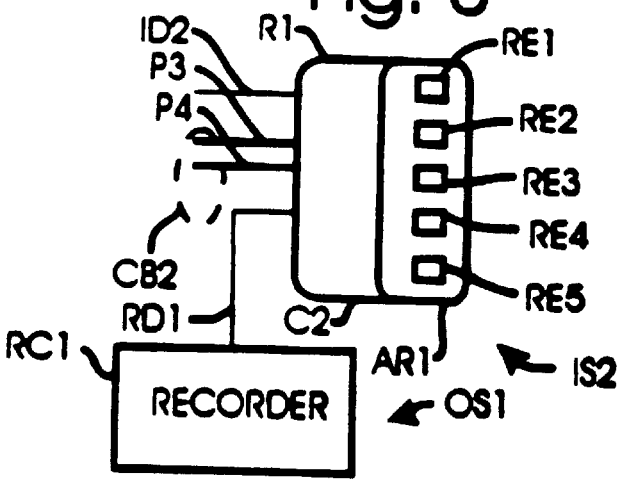

Fig. 3

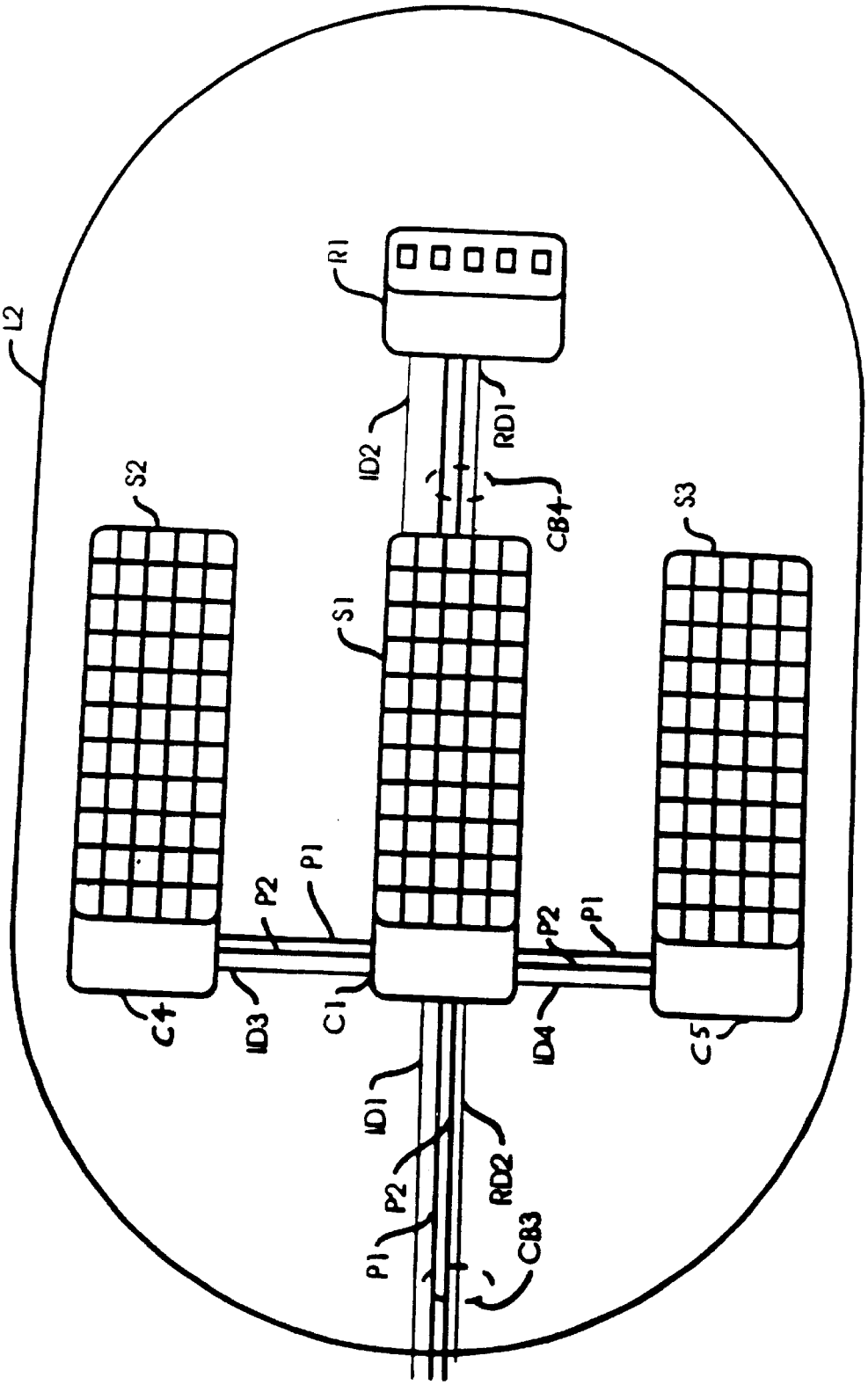

Fig. 4

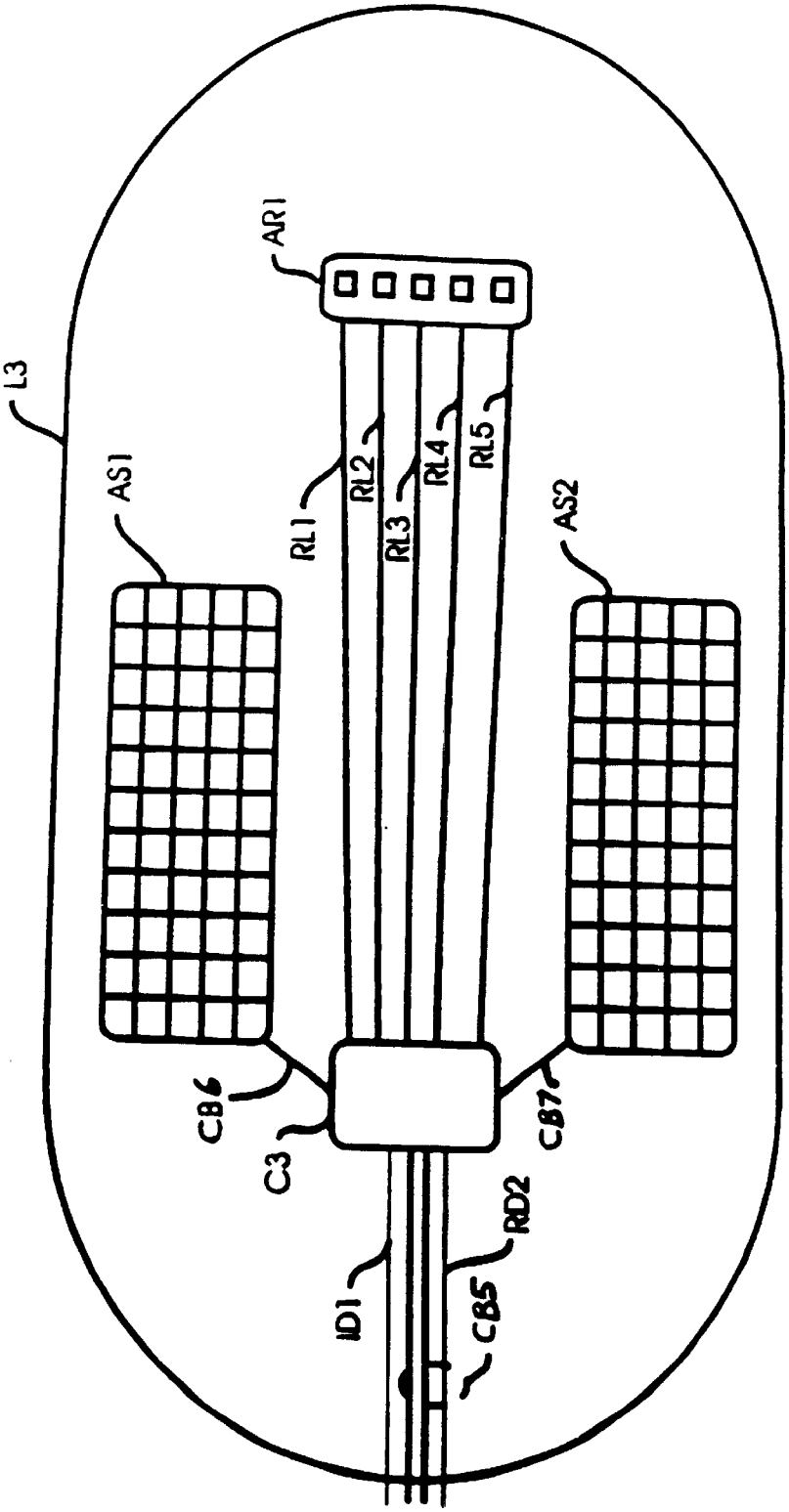

Fig. 5

DOCKET ALARM

Explore Litigation Insights

Docket Alarm provides insights to develop a more informed litigation strategy and the peace of mind of knowing you're on top of things.

Real-Time Litigation Alerts

Keep your litigation team up-to-date with **real-time alerts** and advanced team management tools built for the enterprise, all while greatly reducing PACER spend.

Our comprehensive service means we can handle Federal, State, and Administrative courts across the country.

Advanced Docket Research

With over 230 million records, Docket Alarm's cloud-native docket research platform finds what other services can't. Coverage includes Federal, State, plus PTAB, TTAB, ITC and NLRB decisions, all in one place.

Identify arguments that have been successful in the past with full text, pinpoint searching. Link to case law cited within any court document via Fastcase.

Analytics At Your Fingertips

Learn what happened the last time a particular judge, opposing counsel or company faced cases similar to yours.

Advanced out-of-the-box PTAB and TTAB analytics are always at your fingertips.

API

Docket Alarm offers a powerful API (application programming interface) to developers that want to integrate case filings into their apps.

LAW FIRMS

Build custom dashboards for your attorneys and clients with live data direct from the court.

Automate many repetitive legal tasks like conflict checks, document management, and marketing.

FINANCIAL INSTITUTIONS

Litigation and bankruptcy checks for companies and debtors.

E-DISCOVERY AND LEGAL VENDORS

Sync your system to PACER to automate legal marketing.